CH-TRAMPAC

Revision 2
February 2005

This page intentionally left blank to facilitate duplex printing.

TABLE OF CONTENTS

1.0 INTRODUCTION 1.1-1

1.1 Scope 1.1-1

1.2 Purpose 1.2-1

1.3 Requirements 1.3-1

1.4 Methods of Compliance 1.4-1

1.4.1 Visual Examination 1.4-2

1.4.2 Visual Inspection 1.4-2

1.4.3 Radiography 1.4-2

1.4.4 Records and Database Information 1.4-2

1.4.5 Administrative and Procurement Controls 1.4-3

1.4.6 Sampling Programs 1.4-3

1.4.7 Measurement 1.4-3

1.5 CH-TRUCON Document 1.5-1

1.5.1 Required Elements 1.5-1

1.5.2 Use and Approval 1.5-2

1.6 Compliance Program 1.6-1

1.6.1 Transportation Certification Official 1.6-1

1.6.2 DOE-CBFO 1.6-1

1.7 Quality Assurance 1.7-1

2.0 CONTAINER AND PHYSICAL PROPERTIES REQUIREMENTS 2.1-1

2.1 Authorized Payload Containers 2.1-1

2.1.1 Requirements 2.1-1

2.1.2 Methods of Compliance and Verification 2.1-2

2.2 Dunnage 2.2-1

2.2.1 Requirements 2.2-1

2.2.2 Methods of Compliance and Verification 2.2-1

2.3 Container/Assembly Weight and Center of Gravity 2.3-1

2.3.1 Requirements 2.3-1

2.3.1.1 Requirements for Container/Assembly Weight 2.3-1

2.3.1.2 Requirements for Center of Gravity 2.3-2

2.3.2 Methods of Compliance and Verification 2.3-2

2.3.2.1 Methods of Compliance and Verification for Container/Assembly Weight 2.3-2

2.3.2.2 Methods of Compliance and Verification for Center of Gravity 2.3-3

2.4 Container Marking 2.4-1
2.4.1 Requirements 2.4-1
2.4.2 Methods of Compliance and Verification 2.4-1
2.5 Filter Vents 2.5-1
2.5.1 Requirements 2.5-1
2.5.2 Methods of Compliance and Verification 2.5-3
2.6 Liquids 2.6-1
2.6.1 Requirements 2.6-1
2.6.2 Methods of Compliance and Verification 2.6-1
2.7 Sharp or Heavy Objects 2.7-1
2.7.1 Requirements 2.7-1
2.7.2 Methods of Compliance and Verification 2.7-1
2.8 Sealed Containers 2.8-1
2.8.1 Requirements 2.8-1
2.8.2 Methods of Compliance and Verification 2.8-1
2.9 Payload Container/Assembly Configuration Specifications 2.9-1
2.9.1 55-Gallon Drum 2.9-1
2.9.2 Standard Pipe Overpack 2.9-6
2.9.3 S100 Pipe Overpack 2.9-10
2.9.4 S200 Pipe Overpack 2.9-13
2.9.5 S300 Pipe Overpack 2.9-16
2.9.6 85-Gallon Drum 2.9-19
2.9.7 100-Gallon Drum 2.9-26
2.9.8 Standard Waste Box 2.9-31
2.9.9 Ten-Drum Overpack 2.9-36

3.0 NUCLEAR PROPERTIES REQUIREMENTS 3.1-1
3.1 Nuclear Criticality 3.1-1
3.1.1 Requirements 3.1-1
3.1.2 Methods of Compliance and Verification 3.1-5
3.2 Radiation Dose Rates 3.2-1
3.2.1 Requirements 3.2-1
3.2.2 Methods of Compliance and Verification 3.2-1
3.3 Activity Limits 3.3-1
3.3.1 Requirements 3.3-1
3.3.2 Methods of Compliance and Verification 3.3-1

4.0 CHEMICAL PROPERTIES REQUIREMENTS 4.1-1

4.1 Pyrophoric Materials 4.1-1
4.1.1 Requirements 4.1-1
4.1.2 Methods of Compliance and Verification 4.1-1

4.2 Explosives, Corrosives, and Compressed Gases 4.2-1
4.2.1 Requirements 4.2-1
4.2.2 Methods of Compliance and Verification 4.2-1

4.3 Chemical Composition 4.3-1
4.3.1 Requirements 4.3-1
4.3.2 Methods of Compliance and Verification 4.3-1

4.4 Chemical Compatibility 4.4-1
4.4.1 Requirements 4.4-1
4.4.2 Methods of Compliance and Verification 4.4-1

5.0 GAS GENERATION REQUIREMENTS 5.1-1

5.1 Payload Shipping Category 5.1-1
5.1.1 Requirements 5.1-4
5.1.2 Methods of Compliance and Verification 5.1-4
5.1.2.1 Numeric Shipping Category Notation 5.1-4
5.1.2.2 Alpha-numeric Shipping Category Notation 5.1-5
5.1.2.3 Compliance with Specific Requirements for Total Resistance ... 5.1-5

5.2 Flammable (Gas/VOC) Concentration Limits 5.2-1
5.2.1 Requirements 5.2-1
5.2.2 Methods of Compliance and Verification 5.2-1
5.2.2.1 Analytical Category: Compliance with Flammable (Gas/VOC) Limits 5.2-8
5.2.2.2 Drum Age Criteria for Flammable VOC Measurement 5.2-10
5.2.2.3 Test Category: Compliance with Flammable (Gas/VOC) Limits by Measurement 5.2-11
5.2.2.4 Test Category: Compliance with Flammable (Gas/VOC) Limits by Testing 5.2-12
5.2.2.5 Compliance with Flammable (Gas/VOC) Limits by Mixing of Shipping Categories in a Payload Assembly 5.2-14
5.2.3 Hydrogen Gas Generation Rate and Decay Heat Limits for Analytical Category 5.2-15
5.2.4 Drum Age Criteria 5.2-21
5.2.4.1 Introduction 5.2-21
5.2.4.2 Assignment of DACs for Common Packaging Configurations 5.2-23
5.2.5 Unified Flammable Gas Test Procedure 5.2-31
5.2.5.1 Introduction 5.2-31

5.2.5.2 Summary of Procedure 5.2-32
5.2.5.3 Procedure for Measurement 5.2-33
5.2.5.4 Procedure for Testing 5.2-40
5.2.5.5 Implementation of Unified Flammable Gas Test Procedure Long-Term Objective 5.2-45

5.3 Venting and Aspiration 5.3-1
5.3.1 Requirements 5.3-1
5.3.2 Methods of Compliance and Verification 5.3-1
5.3.2.1 Option 1—Aspiration Time Based on Date of Payload Container Closure 5.3-1
5.3.2.2 Option 2—Headspace Gas Sampling at the Time of Venting 5.3-1
5.3.2.3 Option 3—Headspace Gas Sampling During Aspiration 5.3-2

6.0 PAYLOAD ASSEMBLY REQUIREMENTS 6.1-1

6.1 Requirements 6.1-1
6.2 Methods of Compliance and Verification 6.2-1
6.2.1 Procedure for Certification of Individual Payload Containers 6.2-1
6.2.1.1 Analytical Category 6.2-1
6.2.1.2 Test Category 6.2-8
6.2.1.3 Overpack Payload Containers 6.2-9
6.2.2 Procedure for Assembly and Certification of a CH-TRU Payload 6.2-20
6.2.3 Shipments Designated as Controlled Shipments 6.2-26
6.2.4 Mixing of Shipping Categories 6.2-29
6.2.5 Payload Total Gas Release Rate Compliance Evaluation 6.2-30

7.0 QUALITY ASSURANCE 7.1-1

7.1 QA Requirements for Payload Compliance 7.1-1
7.2 QA Compliance and Verification 7.2-1

LIST OF TABLES

Table 2.1-1 – Authorized Payload Containers 2.1-1
Table 2.3-1 – Payload Container Maximum Gross Weight Limits 2.3-1
Table 2.3-2 – TRUPACT-II and Payload Assembly Maximum Gross Weight Limits 2.3-1
Table 2.3-3 – HalfPACT and Payload Assembly Maximum Gross Weight Limits 2.3-2
Table 2.5-1 – Minimum Filter Vent Specifications 2.5-2
Table 2.9-1 – 55-Gallon Drum Dimensions 2.9-1
Table 2.9-2 – 55-Gallon Drum Materials of Construction 2.9-5
Table 2.9-3 – 55-Gallon Drum Weights 2.9-5

Table 2.9-4 – 55-Gallon Drum: Material Content Forms Authorized for Transport 2.9-5
Table 2.9-5 – Pipe Component Dimensions 2.9-6
Table 2.9-6 – Pipe Component Materials of Construction 2.9-8
Table 2.9-7 – Pipe Component Weights 2.9-8
Table 2.9-8 – Standard Pipe Overpack Weights 2.9-8
Table 2.9-9 – Standard Pipe Overpack: Material Content Forms Authorized for Transport 2.9-9
Table 2.9-10 – Shield Nominal Dimensions 2.9-10
Table 2.9-11 – Shield Materials of Construction 2.9-10
Table 2.9-12 – 6-inch Diameter Pipe Component Weights 2.9-12
Table 2.9-13 – S100 Pipe Overpack: Material Content Form Authorized for Transport 2.9-12
Table 2.9-14 – Shield Insert Nominal Dimensions 2.9-13
Table 2.9-15 – Shield Insert Materials of Construction 2.9-13
Table 2.9-16 – 12-inch Pipe Component Weights 2.9-15
Table 2.9-17 – S200 Pipe Overpack: Material Content Forms Authorized for Transport .. 2.9-15
Table 2.9-18 – Shield Insert Nominal Dimensions 2.9-16
Table 2.9-19 – Shield Insert Materials of Construction 2.9-16
Table 2.9-20 – 12-inch Pipe Component Weights 2.9-18
Table 2.9-21 – S300 Pipe Overpack: Material Content Form Authorized for Transport 2.9-18
Table 2.9-22 – 85-Gallon Drum Dimensions 2.9-19
Table 2.9-23 – 85-Gallon Drum Materials of Construction 2.9-20
Table 2.9-24 – 85-Gallon Drum Weights 2.9-20
Table 2.9-25 – 85-Gallon Drum: Material Content Forms Authorized for Transport 2.9-20
Table 2.9-26 – 100-Gallon Drum Dimensions 2.9-26
Table 2.9-27 – 100-Gallon Drum Materials of Construction 2.9-26
Table 2.9-28 – 100-Gallon Drum Weights 2.9-30
Table 2.9-29 – 100-Gallon Drum: Material Content Forms Authorized for Transport 2.9-30
Table 2.9-30 – SWB Dimensions 2.9-31
Table 2.9-31 – SWB Materials of Construction 2.9-31
Table 2.9-32 – SWB Weights 2.9-35
Table 2.9-33 – SWB: Material Content Forms Authorized for Transport 2.9-35
Table 2.9-34 – TDOP Dimensions 2.9-36
Table 2.9-35 – TDOP Materials of Construction 2.9-36

Table 2.9-36 – TDOP Weights 2.9-36

Table 2.9-37 – TDOP: Material Content Forms Authorized for Transport 2.9-39

Table 3.1-1 – Summary of FGE Limits 3.1-4

Table 3.1-2 – Pu-239 Fissile Gram Equivalent, Decay Heat, and Specific Activity of Many Radionuclides 3.1-9

Table 3.2-1 – Maximum Surface Dose Rate Limits 3.2-1

Table 3.3-1 – Sealed Source Forms for S100 and S300 Pipe Overpacks 3.3-1

Table 3.3-2 – Limiting Activity per S200 Pipe Overpack 3.3-3

Table 4.3-1 – Allowable Materials for Waste Material Type I.1$^{\Phi}$ Absorbed, Adsorbed, or Solidified Inorganic Liquid 4.3-3

Table 4.3-2 – Allowable Materials for Waste Material Type I.2$^{\Phi}$ Soils, Solidified Particulates, or Sludges Formed from Precipitation 4.3-4

Table 4.3-3 – Allowable Materials for Waste Material Type I.3$^{\Phi}$ Concreted Inorganic Particulate Waste 4.3-5

Table 4.3-4 – Allowable Materials for Waste Material Types II.1 and II.2$^{\Phi}$ Solid Inorganic Materials 4.3-6

Table 4.3-5 – Allowable Materials for Waste Material Type II.3$^{\Phi}$ Homogeneous Solid Inorganic Materials with Unbound Absorbed Ambient Moisture (≤6% by weight) 4.3-7

Table 4.3-6 – Allowable Materials for Waste Material Type III.1$^{\Phi}$ Solid Organic Materials 4.3-8

Table 4.3-7 – Allowable Materials for Waste Material Types III.2 and III.3$^{\Phi}$ Homogeneous Mixed Organic (10% by weight) and Inorganic (90% by weight) Materials 4.3-9

Table 4.3-8 – Allowable Materials for Waste Material Type IV.1$^{\Phi}$ Solidified Organics 4.3-10

Table 5.1-1 – CH-TRU Waste Material Types and G Values 5.1-3

Table 5.2-1 – List of Approved Alpha-numeric Shipping Categories, Maximum Allowable Hydrogen Gas Generation Rates, and Maximum Allowable Wattages 5.2-17

Table 5.2-2 – List of Flammable Volatile Organic Compounds Identified by Sites in CH-TRU Wastes$^{\Phi}$ 5.2-23

Table 5.2-3 – Common CH-TRU Waste Packaging Configurations 5.2-24

Table 5.2-4 – DAC_1 Values (in Days) 5.2-25

Table 5.2-5 – Packaging-Specific DAC_2 Values (in Days) for Solidified Waste (Waste Types I and IV) 5.2-25

Table 5.2-6 – Packaging-Specific DAC_2 Values (in Days) for Solid Waste (Waste Types II and III) 5.2-26

Table 5.2-7 – Packaging-Specific DAC_3 Values (in Days) for Solidified Waste (Waste Types I and IV) 5.2-27

Table 5.2-8 – Packaging-Specific DAC_3 Values (in Days) for Solid Waste (Waste Types II and III) 5.2-29

Table 5.2-9 – Wattage Limits for Theoretical Analysis of Design Pressure Limit 5.2-36

Table 5.2-10 – Decay Heat Criteria for Container Selection 5.2-40

Table 5.2-11 – Maximum Allowable Total Gas Release Rates for Waste Type IV 5.2-44

Table 5.2-12 – CH-TRU Waste Test Category Payload Container Data Sheet[Φ] 5.2-49

Table 5.3-1 – Aspiration Times Based on Date of Drum Closure (Waste Type I[Φ]) 5.3-3

Table 5.3-2 – Aspiration Times Based on Date of Drum Closure (Waste Material Type II.1) 5.3-5

Table 5.3-3 – Aspiration Times Based on Date of Drum Closure (Waste Type III[Φ]) 5.3-7

Table 5.3-4 – Aspiration Times Based on Container Headspace Gas Sampling at Time of Venting (Waste Type I[Φ]) 5.3-9

Table 5.3-5 – Aspiration Times Based on Container Headspace Gas Sampling at Time of Venting (Waste Material Type II.1) 5.3-13

Table 5.3-6 – Aspiration Times Based on Container Headspace Gas Sampling at Time of Venting (Waste Type III[Φ]) 5.3-16

Table 5.3-7 – Aspiration Times Based on Rigid Liner Headspace Gas Sampling at Time of Venting (Waste Type I[Φ]) 5.3-21

Table 5.3-8 – Aspiration Times Based on Rigid Liner Headspace Gas Sampling at Time of Venting (Waste Material Type II.1) 5.3-25

Table 5.3-9 – Aspiration Times Based on Rigid Liner Headspace Gas Sampling at Time of Venting (Waste Type III[Φ]) 5.3-29

Table 5.3-10 – Aspiration Times (in Days) Based on Headspace Gas Sampling During Aspiration (Waste Type I[Φ]) 5.3-33

Table 5.3-11 – Aspiration Times (in Days) Based on Headspace Gas Sampling During Aspiration (Waste Material Type II.1) 5.3-37

Table 5.3-12 – Aspiration Times (in Days) Based on Headspace Gas Sampling During Aspiration (Waste Type III[Φ]) 5.3-41

Table 6.2-1 – Payload Container Transportation Certification Document (PCTCD), Analytical Category[Φ] 6.2-14

Table 6.2-2 – Payload Container Transportation Certification Document (PCTCD), Test Category[①] 6.2-16

Table 6.2-3 – Overpack Payload Container Transportation Certification Document (OPCTCD)[Φ] 6.2-18

Table 6.2-4 – Payload Assembly Transportation Certification Document (PATCD)[Φ] 6.2-24

Table 6.2-5 – Site Control Checklist for Controlled Shipments[Φ] 6.2-27

Table 6.2-6 – WIPP Control Checklist for Controlled Shipments[Φ] 6.2-28
Table 6.2-7 – Void Volume Values for Payload Assembly Configurations..... 6.2-31

LIST OF FIGURES

Figure 2.9-1 – 55-Gallon Drum 2.9-2
Figure 2.9-2 – TRUPACT-II: Fourteen 55-Gallon Drum Payload..... 2.9-3
Figure 2.9-3 – HalfPACT: Seven 55-Gallon Drum Payload 2.9-4
Figure 2.9-4 – Standard Pipe Overpack..... 2.9-7
Figure 2.9-5 – S100 Pipe Overpack..... 2.9-11
Figure 2.9-6 – S200 Pipe Overpack..... 2.9-14
Figure 2.9-7 – S300 Pipe Overpack..... 2.9-17
Figure 2.9-8 – 85-Gallon Drum (Short)..... 2.9-21
Figure 2.9-9 – 85-Gallon Drum (Tall) 2.9-22
Figure 2.9-10 – TRUPACT-II: Eight 85-Gallon Drum (Short) Payload..... 2.9-23
Figure 2.9-11 – HalfPACT: Four 85-Gallon Drum (Short) Payload..... 2.9-24
Figure 2.9-12 – HalfPACT: Four 85-Gallon Drum (Tall) Payload 2.9-25
Figure 2.9-13 – 100-Gallon Drum 2.9-27
Figure 2.9-14 – TRUPACT-II: Six 100-Gallon Drum Payload..... 2.9-28
Figure 2.9-15 – HalfPACT: Three 100-Gallon Drum Payload..... 2.9-29
Figure 2.9-16 – Standard Waste Box 2.9-32
Figure 2.9-17 – TRUPACT-II: Two Standard Waste Box Payload 2.9-33
Figure 2.9-18 – HalfPACT: One Standard Waste Box Payload..... 2.9-34
Figure 2.9-19 – Ten-Drum Overpack 2.9-37
Figure 2.9-20 – TRUPACT-II: One Ten-Drum Overpack Payload 2.9-38
Figure 5.2-1 – Logic Diagram for Compliance with Flammable (Gas/VOC) Limits by Analysis 5.2-3
Figure 5.2-2 – Logic Diagram for Drum Age Criteria for Flammable VOC Measurement... 5.2-4
Figure 5.2-3 – Logic Diagram for Compliance with Flammable (Gas/VOC) Limits by Measurement..... 5.2-5
Figure 5.2-4 – Logic Diagram for Compliance with Flammable (Gas/VOC) Limits by Testing 5.2-6
Figure 5.2-5 – Logic Diagram for Compliance with Flammable (Gas/VOC) Limits by Mixing of Shipping Categories in a Payload Assembly 5.2-7
Figure 5.2-6 – Determination of DAC Option..... 5.2-22

Figure 6.1-1 – Evaluation of Transportation Compliance for a Payload Container 6.1-2

Figure 6.1-2 – TRUPACT-II and HalfPACT Payload Assembly Criteria for Payload Containers of the Same Shipping Category 6.1-3

Figure 6.2-1 – Assignment of Shipping Categories 6.2-3

This page intentionally left blank.

LIST OF ABBREVIATIONS AND ACRONYMS

°C	degrees Celsius
°F	degrees Fahrenheit
AFGGR	(maximum) allowable flammable gas generation rate
ALARA	"as low as reasonably achievable"
ANS	American Nuclear Society
ANSI	American National Standards Institute
ASTM	American Society for Testing and Materials
Be	beryllium
BeO	beryllium oxide
CBFO	Carlsbad Field Office
CFR	Code of Federal Regulations
CH	contact-handled
CH-TRAMPAC	Contact-Handled Transuranic Waste Authorized Methods for Payload Control
CH-TRUCON	CH-TRU Waste Content Codes (document)
Ci	curie(s)
DAC	drum age criteria
DOE	U.S. Department of Energy
DQO	data quality objective
EPA	U.S. Environmental Protection Agency
eV	electron volt
FGE	fissile gram equivalent
FGGR	flammable gas generation rate
FI	flammability index
GCF	group contribution factor
ICV	inner containment vessel
ID	identification
in.	inch(es)
lbs.	pound(s)
MLEL	mixture lower explosive limit

mrem/hr	millirem/hour
MS	mass spectrometry
NRC	U.S. Nuclear Regulatory Commission
OCA	outer containment assembly
OPCTCD	Overpack Payload Container Transportation Certification Document
PATCD	Payload Assembly Transportation Certification Document
PCTCD	Payload Container Transportation Certification Document
PF	prediction factor
ppm	parts per million
Pu	plutonium
QA	quality assurance
QAPP	Quality Assurance Program Plan (for the TRUPACT-II Gas Generation Test Program)
QC	quality control
RSS	root sum of squares
SAR	safety analysis report
SWB	standard waste box
TDOP	ten-drum overpack
TRAMPAC	TRU Waste Authorized Methods for Payload Control (programmatic or waste-specific)
TRU	transuranic
TRUPACT-II	Transuranic Package Transporter-II
UFGTP	Unified Flammable Gas Test Procedure
VOC	volatile organic compound
WIPP	Waste Isolation Pilot Plant

LIST OF CH-TRU PAYLOAD APPENDICES

The CH-TRU Payload Appendices contain supporting documentation and other reference materials for the limits and compliance methods defined in the CH-TRAMPAC. All appendices referenced in the CH-TRAMPAC are found in the CH-TRU Payload Appendices. The table of contents for the CH-TRU Payload Appendices is shown below.

1.0 INTRODUCTION

2.0 PAYLOAD QUALIFICATION METHODOLOGY

- 2.1 Logic for Payload Shipping Categories
- 2.2 Procedure for Determining Numeric Payload Shipping Category
- 2.3 Derivation of Decay Heat Limits
- 2.4 Mixing of Shipping Categories and Determination of the Flammability Index

3.0 GAS GENERATION METHODOLOGY

- 3.1 Radiolytic G Values for Waste Materials
- 3.2 Effective G Values for CH-TRU Waste Material Types
- 3.3 Use of Dose-Dependent G Values for CH-TRU Wastes
- 3.4 Shipping Period – General Case
- 3.5 Shipping Period – Close-Proximity Shipments
- 3.6 Shipping Period – Controlled Shipments
- 3.7 Aspiration of Unvented Payload Containers of CH-TRU Waste
- 3.8 Specification for Closure of Inner Confinement Layers
- 3.9 Determination of Steady-State VOC Concentrations from DACs
- 3.10 Determination of Flammable Gas/Volatile Organic Compound Concentrations by Measurement
- 3.11 Use of Filtered Bags as Confinement Layers for CH-TRU Wastes

4.0 PAYLOAD CONTAINER DESIGN BASIS EVALUATIONS

- 4.1 Description of Standard Pipe Overpack
- 4.2 Description of S100 Pipe Overpack
- 4.3 Description of S200 Pipe Overpack
- 4.4 Description of S300 Pipe Overpack

5.0 ASSESSMENT METHODS

- 5.1 Real-Time Radiography Procedures
- 5.2 DOE Assay Methods Used for Determination of Fissile Material Content and Decay Heat Values of CH-TRU Wastes

5.3 CH-TRU Waste Sampling Programs at DOE Sites

6.0 SUPPORTING EVALUATIONS

6.1 Chemical Compatibility of Waste Forms

6.2 Free Halides in the CH-TRU Waste Payload – Source Term and Release Rate Estimates

6.3 Payload Compatibility with Butyl Rubber O-Ring Seals

6.4 Volatile Organic Compounds (VOC) in the CH-TRU Payload – Source Term and Release Rate Estimates

6.5 Biological Activity Assessment

6.6 Thermal Stability of Payload Materials at Transport Temperatures

6.7 Gas Release Assessment

6.8 Gas Release Testing

6.9 Temperature Dependence of Hydrogen Gas Generation and Release Rates

6.10 Effect on Decay Heat Limits of Overpacking Payload Containers

6.11 Shipment of Tritium-Contaminated Waste

6.12 Use of TRUPACT-II for the Shipment of High-Wattage CH-TRU Waste

6.13 Shipment of CH-TRU Waste Packaging Configurations with an Unvented Heat-Sealed Bag Layer

1.0 INTRODUCTION

The Contact-Handled Transuranic Waste Authorized Methods for Payload Control (CH-TRAMPAC) is the governing document for shipments in the Transuranic Package Transporter-II (TRUPACT-II) and HalfPACT packagings. All users of the TRUPACT-II and the HalfPACT shall comply with all payload requirements outlined in this document, using one or more of the methods described. Supporting information for the limits and compliance methods defined in this document is contained in the CH-TRU Payload Appendices.[1]

1.1 Scope

The TRUPACT-II and the HalfPACT have been developed as Type B packagings to provide a safe means of transporting contact-handled (CH) transuranic (TRU) wastes and other authorized payloads such as tritium-contaminated materials. The shipment of tritium-contaminated waste shall be as described in Appendix 6.11 of the CH-TRU Payload Appendices.[1] The shipment of high-wattage CH-TRU waste shall be as described in Appendix 6.12 of the CH-TRU Payload Appendices.[1] The shipment of waste packaging configurations with a single unvented heat-sealed bag layer in addition to other layers of confinement shall be as described in Appendix 6.13 of the CH-TRU Payload Appendices.[1] Both packagings consist of an outer containment assembly (OCA), an inner containment vessel (ICV), and two aluminum honeycomb spacer assemblies, with the HalfPACT being a shorter version of the TRUPACT-II. The CH-TRAMPAC defines the authorized contents for both packagings. The defined payload is, for the most part, independent of packaging. Information that is specific to the TRUPACT-II or the HalfPACT packaging is identified as such within the CH-TRAMPAC.

[1] U.S. Department of Energy (DOE), *CH-TRU Payload Appendices*, U.S. Department of Energy, Carlsbad Field Office, Carlsbad, New Mexico.

This page intentionally left blank.

1.2 Purpose

The purposes of the CH-TRAMPAC are to:

- Define the applicable requirements for a payload to be transported in the TRUPACT-II or HalfPACT packaging
- Describe the acceptable methods of compliance that shall be used to prepare and characterize the CH-TRU materials or other payload materials prior to transport in a TRUPACT-II or HalfPACT packaging
- Identify the quality assurance (QA) program that shall be applied to these methods.

This page intentionally left blank.

1.3 Requirements

Requirements are established to ensure compliance of the payload with the transportation parameters of the TRUPACT-II and HalfPACT packagings. The CH-TRAMPAC defines payload requirements under the following categories:

- Container and Physical Properties (Chapter 2.0)
- Nuclear Properties (Chapter 3.0)
- Chemical Properties (Chapter 4.0)
- Gas Generation (Chapter 5.0)
- Payload Assembly (Chapter 6.0)
- Quality Assurance (Chapter 7.0).

This page intentionally left blank.

1.4 Methods of Compliance

This document describes allowable methods to be used for determining compliance with each payload requirement and the controls imposed on the use of each method. Each generator or storage site shall select and implement a single method, or a combination of methods, to ensure that the payload is compliant with each requirement and is qualified for shipment. These methods shall be delineated in a programmatic or waste-specific data TRU Waste Authorized Methods for Payload Control (TRAMPAC).

Each shipper shall document and demonstrate compliance with the CH-TRAMPAC by one of the following methods:

- A programmatic TRAMPAC, which defines the process in which payload compliance is met, will be prepared by the shipper and approved by the U.S. Department of Energy (DOE) Carlsbad Field Office (CBFO). Implementing procedures of the TRAMPAC will be reviewed by the DOE-CBFO for completeness and compliance as part of the audit process.

  Compliance with transportation requirements applies to the following two categories of waste:

  1. Waste Generated Under a Formal Certification Program. Payload containers in this category (designated "100 Series") are characterized individually based on process knowledge and visual examination at the time of waste generation. For sites using a set of site/equipment-specific procedures for payload control for compliance, an independent verification of compliance must be performed prior to transport for no less than 10 percent of the 100 Series payload containers transported from each site per year. This independent verification may consist of a second operator verifying the container contents or waste records during the waste generation process or radiography.
  2. Waste Generated Prior to Site Implementation of a Formal Certification Program. Payload containers in this category (designated "200 Series") are characterized based on process knowledge. An independent verification of compliance shall be performed prior to transport for 200 Series waste using a statistical sampling program comprised of the methods identified in this section (visual examination, radiography, measurement, etc.).

- For small quantity shipments, a waste-specific data TRAMPAC will be prepared by the shipper and approved by the DOE-CBFO. The waste data are evaluated against the requirements in this document. A small quantity shipment may be made by any waste generator who does not have a DOE-CBFO approved programmatic TRAMPAC or a waste generator with a limited number of containers not addressed within their programmatic TRAMPAC.

A summary of the methods of compliance that shall be used for TRUPACT-II and HalfPACT payload control is provided in the following sections.

1.4.1 Visual Examination

Visual examination at the time of waste generation may be used to qualify waste for transport (e.g., 100 Series waste). The operator(s) of a waste generating area shall visually examine the physical form of the waste according to site/equipment-specific procedures and remove all prohibited waste forms prior to placement in the payload container. Observation of the waste generation process by an independent operator may be used as an independent verification of compliance prior to closure of the payload container. Visual examination under a sampling program may be used as independent verification (e.g., to verify the absence of prohibited items in 200 Series waste).

1.4.2 Visual Inspection

Visual inspection may be used to evaluate compliance with specific restrictions (e.g., visual inspection of payload container type, marking, etc.). Visual inspection by a second operator may be considered independent verification.

1.4.3 Radiography

Radiography, or equivalent nondestructive examination techniques, may be used as an independent verification to qualify waste for transport after the payload container is closed (e.g., to nondestructively examine the physical form of the waste and to verify the absence of prohibited waste forms). A radiography system normally consists of an X-ray-producing device, an imaging system, an enclosure for radiation protection, a waste container handling system, an audio/video recording system, and an operator control and data acquisition station. Some variation within a given nondestructive examination system will exist between sites. Site/equipment-specific QA and quality control (QC) procedures ensure that radiography system operator(s) are properly trained and qualified. Appendix 5.1 of the CH-TRU Payload Appendices[1] describes typical real-time radiography procedures.

Other radiographic methods must meet the same performance objectives for real-time radiography (i.e., to nondestructively examine the physical form of the waste and to verify the absence of prohibited items in a payload container) and must be controlled by procedures similar to those described in Appendix 5.1 of the CH-TRU Payload Appendices[1] for real-time radiography.

1.4.4 Records and Database Information

Information obtained from existing site records and/or databases or knowledge of process may be used to qualify waste for transport (e.g., as a basis for reporting the absence of prohibited waste forms within waste containers). This information may be verified using radiography (Section 1.4.3) and/or a waste sampling program (Section 1.4.6).

[1] U.S. Department of Energy (DOE), *CH-TRU Payload Appendices*, U.S. Department of Energy, Carlsbad Field Office, Carlsbad, New Mexico.

1.4.5 Administrative and Procurement Controls

Site-specific administrative and procurement controls may be used to show that the payload container contents are monitored and controlled and to demonstrate the absence of prohibited items.

1.4.6 Sampling Programs

Sampling programs comprised of the statistical application of other methods identified in this section may be used as an independent verification of compliance (e.g., for 200 Series waste). A site-specific statistical sampling program designed to address all payload requirements needing verification is recommended. Appendix 5.3 of the CH-TRU Payload Appendices[1] describes previous sampling programs at the DOE sites.

1.4.7 Measurement

Direct measurement or evaluation based on analysis using the direct measurement may be used to qualify waste (e.g., direct measurement of the weight or analysis of assay data to determine decay heat).

This page intentionally left blank.

1.5 CH-TRUCON Document

The CH-TRU Waste Content Codes (CH-TRUCON) document[1] is a catalog of TRUPACT-II and HalfPACT authorized contents and a description of the methods utilized to demonstrate compliance with the CH-TRAMPAC.

1.5.1 Required Elements

Each content code within the CH-TRUCON document must contain the following elements:

CONTENT CODE: Identifies the two-letter site abbreviation that designates the physical location of the waste and the three-digit code that designates waste generation relative to implementation of a formal certification program and the physical and chemical form of the waste. Content code identifiers are defined in the CH-TRUCON (Tables 3 and 4).

CONTENT DESCRIPTION: Identifies the physical form of the waste (e.g., describing whether it is inorganic or organic, solidified or solid). This is similar to the waste material type titles in Section 5.1.

STORAGE SITE: Provides the location of the waste, if the location is different than the generating site. If the generating site and storage site are the same, this section is not required to be included in the content code.

GENERATING SITE: Provides the location of waste generation.

WASTE DESCRIPTION: Provides basic information regarding the nature and/or main components of the waste.

GENERATING SOURCE(S): Lists processes and/or buildings at each site that generate the waste in each content code.

WASTE FORM: Provides more detailed information on the waste contents, how the waste is processed, and/or specific information about the chemistry of constituents.

WASTE PACKAGING: Describes, in detail, techniques necessary for waste packaging in a given content code. This includes a description of the waste confinement layers, the number of layers of confinement used in packaging waste, and the mechanism for bag, can, or container closure.

ASSAY: Describes the types of radioactive materials measurement techniques or other methods utilized to obtain fissile material content and decay heat values for a particular content code.

FREE LIQUIDS: Describes the procedures used by the sites to ensure that the limits imposed on free liquids (<1% by volume) are met for each content code.

EXPLOSIVES/COMPRESSED GASES: Identifies the methods used to preclude the presence of explosives or compressed gases.

[1] U.S. Department of Energy (DOE), *CH-TRU Waste Content Codes (CH-TRUCON)*, current revision, DOE/WIPP 01-3194, U.S. Department of Energy, Carlsbad Field Office, Carlsbad, New Mexico.

PYROPHORICS: Describes the controls in place at each site to ensure that nonradioactive pyrophoric materials in TRU waste are excluded, reacted to render nonreactive, or are immobilized prior to placement in waste.

CORROSIVES: Describes the controls in place to ensure that corrosive materials in TRU waste either are not present or are neutralized or immobilized prior to placement in a payload container.

CHEMICAL COMPATIBILITY: Describes the controls in place to ensure chemical compatibility for the waste contents and the TRUPACT-II or HalfPACT packaging. All chemicals/materials in the waste for a specific content code are restricted to the allowable chemical lists (Table 4.3-1 through Table 4.3-8) and the 5% limit on total materials not listed as specified in Section 4.3.

PAYLOAD CONTAINER VENTING AND ASPIRATION: Details how payload containers that have been stored in an unvented condition (i.e., no filter and/or unpunctured liner) will be aspirated to ensure equilibration of any gases that may have accumulated in the closed container. This procedure is required only for unvented waste.

ADDITIONAL CRITERIA: Provides details on how the waste qualifies for shipment by meeting additional transport requirements (e.g., venting payload containers and liners).

SHIPPING CATEGORY: Shipping categories based on the above parameters for each content code are summarized in the CH-TRUCON (Table 2).

MAXIMUM ALLOWABLE WATTAGE: The maximum allowable wattage limit for each shipping category is determined in accordance with Section 5.2.3.

1.5.2 Use and Approval

All containers must have a content code approved by the Waste Isolation Pilot Plant (WIPP) CH-TRU Payload Engineer to be eligible for shipment. Any site requiring the transportation of TRU waste in the TRUPACT-II or HalfPACT that is not described in an approved content code must request the revision or addition of a content code by submitting a request in writing to the WIPP CH-TRU Payload Engineer.

The WIPP CH-TRU Payload Engineer has the authority to approve a content code request only if compliance with the transportation requirements of the CH-TRAMPAC document can be demonstrated. Any submittal not meeting the requirements of the CH-TRAMPAC shall not be approved for inclusion in the CH-TRUCON document or be used as the basis for a shipment in the TRUPACT-II or HalfPACT. The WIPP CH-TRU Payload Engineer does not have the authority to change the transportation requirements for the TRUPACT-II or the HalfPACT as specified in the CH-TRAMPAC document without approval from the U.S. Nuclear Regulatory Commission (NRC).

Requests for revisions to content codes shall be submitted to the WIPP CH-TRU Payload Engineer and may include the following:

- Minor revisions to the content code descriptions (e.g., changes to buildings or sources generating the waste)

- Changes to method(s) used to characterize the waste (e.g., the use of an alternate approved assay method)
- Changes to the packaging descriptions (e.g., the use of a different number of bag layers)
- Addition of a new authorized waste form from a given site (e.g., shipment of filter waste)
- Minor revisions to the chemical list for a specific content code.

The process for requesting a content code addition or revision is as follows:

1. The site prepares in writing a request containing sufficient information to satisfy all of the necessary elements identified in Section 1.5.1. If the request is for a content code revision, only the revised elements require preparation and documentation. The site shall ensure that the information submitted in the form of a content code addition or revision accurately describes the waste and waste generating processes based on site knowledge.
2. The site submits the request (e.g., draft content code or revised content code elements) in writing to the WIPP CH-TRU Payload Engineer for review.
3. The WIPP CH-TRU Payload Engineer shall review the submittal for completeness and satisfactory demonstration of compliance with all the transportation requirements of the CH-TRAMPAC. As part of this review, the WIPP CH-TRU Payload Engineer's responsibilities may include a review to ensure that each of the previously identified elements is complete, the calculation or verification of new payload shipping categories to accommodate changes in packaging configurations using the Numeric Payload Shipping Category Worksheet (Table 2.2-1 through Table 2.2-4 in Appendix 2.2 of the CH-TRU Payload Appendices[2]), and the analysis of compliance with the list of allowable materials (for new waste forms or for changes in chemical composition) pursuant to Section 4.3. The WIPP CH-TRU Payload Engineer shall not approve any submittal that does not demonstrate compliance with every transportation requirement for the TRUPACT-II and HalfPACT.
4. Upon completion of the review, the WIPP CH-TRU Payload Engineer shall send formal written notification to the site indicating the status of the request. If the request is denied, the WIPP CH-TRU Payload Engineer shall indicate in the notification the reason why the request was not accepted and shall identify which elements of the submittal are incomplete or out of compliance.
5. If the request is approved, a site may begin using the new or revised content code once official written notification is received from the WIPP CH-TRU Payload Engineer. Sites may not use proposed content code additions or revisions to make shipments in the TRUPACT-II or HalfPACT prior to receipt of written notification from the WIPP CH-TRU Payload Engineer.
6. The WIPP CH-TRU Payload Engineer shall record all approved content code additions or revisions in the CH-TRUCON document. The current revision of the CH-TRUCON document shall be available to sites.

[2] U.S. Department of Energy (DOE), *CH-TRU Payload Appendices*, U.S. Department of Energy, Carlsbad Field Office, Carlsbad, New Mexico.

This page intentionally left blank.

1.6 Compliance Program

1.6.1 Transportation Certification Official

The site Transportation Certification Official is responsible for administratively verifying the compliance of payload containers and the payload assembly with all transportation requirements. The site Transportation Certification Official shall approve by signature on the transportation certification documents every payload for transport.

1.6.2 DOE-CBFO

The DOE-CBFO is responsible for the performance of compliance verification audits, which are conducted prior to the first shipment and periodically thereafter to evaluate TRUPACT-II and HalfPACT payload compliance. Audit activities include document review and interview of site operators on a job-function basis relative to meeting the applicable criteria. Where specific technical ability is required (e.g., chemical compatibility, isotopic inventory, and assay), technical experts are included on the audit team. DOE-CBFO will grant or deny waste transportation authorization based on objective evidence of the audit and the recommendation of the audit team's report. Compliance verification audits are not required at sites that document compliance by preparing waste-specific data packages that are reviewed and approved by the DOE-CBFO.

This page intentionally left blank.

1.7 Quality Assurance

The QA requirements applicable to the use of the TRUPACT-II and HalfPACT packagings are defined by Title 10, Code of Federal Regulations (CFR), Part 71 (10 CFR 71), Subpart H. The use and maintenance of the TRUPACT-II and the HalfPACT by the user are conducted under a QA program approved by the appropriate DOE field office. The compliance of a payload to be transported in the TRUPACT-II or the HalfPACT is determined by the user under a QA program approved by the DOE-CBFO (see Chapter 7.0).

This page intentionally left blank.

2.0 CONTAINER AND PHYSICAL PROPERTIES REQUIREMENTS

2.1 Authorized Payload Containers

2.1.1 Requirements

Payload containers transported within the TRUPACT-II or HalfPACT shall comply with the specifications in Section 2.9.

The list of authorized payload containers and the associated number of containers in a TRUPACT-II and HalfPACT payload are summarized in Table 2.1-1.

Table 2.1-1 – Authorized Payload Containers

Payload Container Type	Number in Payload①	
	TRUPACT-II	HalfPACT
55-Gallon Drum	14	7
Standard Pipe Overpack②	14	7
S100 Pipe Overpack	14	7
S200 Pipe Overpack	14	7
S300 Pipe Overpack	14	7
85-Gallon Drum③	8	4
100-Gallon Drum	6	3
Standard Waste Box (SWB)	2	1
Ten-Drum Overpack (TDOP)	1	NA④

Notes:

① Payloads shall be comprised of a single payload container type. As specified in Sections 2.9.2, 3.1, and 6.2.4, if standard pipe overpacks are assembled in a payload with 55-gallon drums, the standard pipe overpacks are considered 55-gallon drums and are subject to the applicable limits.

② Standard pipe overpacks must be assembled into seven-packs of 6-inch standard pipe overpacks or 12-inch standard pipe overpacks only.

③ The term "85-gallon drum" in this document includes 75- to 88-gallon drums.

④ NA = Not applicable.

2.1.2 Methods of Compliance and Verification

Compliance shall be by one, or a combination, of the following methods:

- Visual inspection to the specifications of Section 2.9.
- Administrative and procurement controls demonstrating that payload containers have been procured to the specifications of Section 2.9.

In addition to meeting the specifications of Section 2.9 at the time of procurement, the integrity of the payload container shall be visually inspected prior to transport to ensure that payload container is in good and unimpaired condition (e.g., no significant rusting and is of sound structural integrity). Compliance shall be documented in accordance with site-specific procedures prior to shipment.

2.2 Dunnage

2.2.1 Requirements

A shipper shall use empty 55-, 85-, or 100-gallon drums or an SWB as dunnage to complete a payload configuration if too few loaded payload containers are available that meet transportation requirements. The dunnage container(s) must meet the specifications of Section 2.9 with the exception that dunnage containers shall have at least one open vent port (i.e., not filtered or plugged). Note that empty 55-gallon drum(s) can be used as dunnage container(s) to complete a payload of pipe overpacks.

Dunnage containers shall be marked in accordance with Section 2.4.

2.2.2 Methods of Compliance and Verification

Compliance shall be verified through visual inspection and documented prior to shipment.

This page intentionally left blank.

2.3 Container/Assembly Weight and Center of Gravity

2.3.1 Requirements

2.3.1.1 Requirements for Container/Assembly Weight

Each payload container shall comply with the maximum gross weight limits summarized in Table 2.3-1.

Table 2.3-1 – Payload Container Maximum Gross Weight Limits

Payload Container	Maximum Gross Weight (pounds)
55-Gallon Drum	1,000
Standard Pipe Overpack (6-inch diameter)	328
Standard Pipe Overpack (12-inch diameter)	547
S100 Pipe Overpack	550
S200 Pipe Overpack	547
S300 Pipe Overpack	547
85-Gallon Drum①	1,000
100-Gallon Drum	1,000
SWB	4,000
TDOP	6,700

Note:

① The term "85-gallon drum" in this document includes 75- to 88-gallon drums.

Each loaded TRUPACT-II and associated payload assembly shall comply with the maximum gross weight limits provided in Table 2.3-2.

Table 2.3-2 – TRUPACT-II and Payload Assembly Maximum Gross Weight Limits

Assembly	Maximum Gross Weight (pounds)
Payload (Contents)	7,265
Loaded TRUPACT-II (Package)	19,250

Each loaded HalfPACT and associated payload assembly shall comply with the maximum gross weight limits provided in Table 2.3-3.

Table 2.3-3 – HalfPACT and Payload Assembly Maximum Gross Weight Limits

Payload	Maximum Gross Weight (pounds)
Payload (Contents)	7,600
Loaded HalfPACT (Package)	18,100

Maximum gross weight limits for payload assemblies of either the TRUPACT-II or HalfPACT include the weight of the loaded payload container(s) and any additional payload assembly items (e.g., pallets, spacers, guide tubes, slip sheets, reinforcing plates, banding material, slings, etc., as specified in Section 2.9). Actual payload assembly weights are limited by "as-built" TRUPACT-II and HalfPACT weights and U.S. Department of Transportation requirements for a loaded transport vehicle.

Payload containers and TRUPACT-II or HalfPACT payloads shall be acceptable for transport only if the weight plus the measurement error (i.e., one standard deviation) is less than or equal to the maximum gross weights specified in Table 2.3-1 and Table 2.3-2 or Table 2.3-3.

2.3.1.2 Requirements for Center of Gravity

For TRUPACT-II payloads, the total weight of payload container(s) in the top layer of the payload assembly shall be less than or equal to the total weight of payload container(s) in the bottom layer of payload assembly. In the case of drums overpacked in a TDOP, the total weight of the top layer of drums shall be less than or equal to the total weight of the bottom layer of drums.

No center of gravity requirements exist for HalfPACT payloads.

2.3.2 Methods of Compliance and Verification

2.3.2.1 Methods of Compliance and Verification for Container/Assembly Weight

Compliance shall be by measurement. The weight of each payload container (or dunnage) shall be determined using a calibrated scale. The scale calibrations shall be in accordance with the National Institute of Standards and Technology Handbook 44[1], or an equivalent standard. The weight and the measurement error (i.e., one standard deviation) of each payload container shall be recorded in the Payload Container Transportation Certification Document (PCTCD) or the Overpack Payload Container Transportation Certification Document (OPCTCD), as appropriate (see Section 6.2.1).

[1] National Institute of Standards and Technology, *Specifications, Tolerances, and Other Technical Requirements for Weighing and Measuring Devices*, NIST Handbook 44, National Institute of Standards and Technology, Office of Weights and Measures, Washington, D.C.

One of two methods shall be used to calculate the total weight of the payload:

- If the total payload gross weight is obtained by summing the weights of the individual payload containers or dunnage, it shall include the square root of the sum of the squares of the individual measurement errors. If used, the weight of pallets, reinforcing plates, slip sheets, guide tubes, stretch wrap, adjustable slings, etc., shall be added to the sum of the weights of the individual payload containers.
- If the total payload gross weight is obtained by weighing the payload as an assembly, the measurement shall include the error.

The weight and the measurement error shall be reported on the Payload Assembly Transportation Certification Document (PATCD) (see Section 6.2.2).

2.3.2.2 Methods of Compliance and Verification for Center of Gravity

The weight and measurement error of each payload container and of the total payload shall be calculated and reported on the PATCD (see Section 6.2.2), which requires the documentation of verification of compliance with the center of gravity requirements for TRUPACT-II payloads.

No center of gravity requirements exist for HalfPACT payloads.

This page intentionally left blank.

2.4 Container Marking

2.4.1 Requirements

Each payload container shall be labeled with a unique container identification number.

If an empty 55-, 85-, or 100-gallon drum is used as dunnage to complete a payload configuration (see Section 2.2), the dunnage container shall be labeled with the following information:

- Unique container identification number
- "EMPTY" or "DUNNAGE."

If a seven-pack of only dunnage 55-gallon drums, a four-pack of only dunnage 85-gallon drums, a three-pack of only dunnage 100-gallon drums, or a dunnage SWB is used in the TRUPACT-II, the container(s) shall be labeled only "EMPTY" or "DUNNAGE," and the unique container identification number label is not required for these containers.

2.4.2 Methods of Compliance and Verification

Compliance shall be through visual inspection of each payload container and dunnage and the unique container identification number/label shall be recorded on the PCTCD or the OPCTCD (see Section 6.2.1).

This page intentionally left blank.

2.5 Filter Vents

2.5.1 Requirements

Each payload container to be transported in the TRUPACT-II or HalfPACT, including all payload containers that are overpacked in other payload containers, shall have one or more filter vents or equivalent venting mechanisms. Payload container filter vents must meet the minimum specifications of Table 2.5-1 and this section. Any equivalent venting mechanisms shall meet the minimum total hydrogen diffusivity per container specified in Table 2.5-1. Specifications for filter vents in plastic bags and other inner layers used as confinement layers within payload containers are also included in Table 2.5-1.

The use of a heat-sealed filtered bag as the innermost layer of confinement to package CH-TRU waste is limited to Waste Material Types I.3, II.1, III.1, and III.3 provided that there is no potential for contact of the filters with water. Waste Material Types II.3 and III.2, which by definition include a metal can as the innermost layer of confinement, may use heat-sealed filtered bags as confinement layers outside of the innermost metal can. Because Waste Material Type II.2 (inorganic solids packaged in metal cans) does not generate flammable gas, heat-sealed filtered or unfiltered bags may be used as confinement layers outside of the innermost metal can. For other waste material types, heat-sealed filtered bags are not allowed as the innermost layer of confinement.

The use of filtered bags in waste packaging configurations must be specified in approved content codes. Appendix 3.11 of the CH-TRU Payload Appendices[1] describes the use of filtered bags as confinement layers and the basis for the increased decay heat limits for specific shipping categories using filtered bags.

Filter vents for the outer payload container and any overpacked payload container shall be legibly marked to ensure both (1) identification of the supplier and (2) date of manufacture, lot number, or unique serial number.

The filter vent housing and element for the outer payload container shall have an operating temperature range from –40 degrees Celsius (°C) to +70°C (-40 degrees Fahrenheit [°F] to +158°F). The filter vent threads shall be compatible with the bung in the container or shall be self-tapping.

[1] U.S. Department of Energy (DOE), *CH-TRU Payload Appendices*, U.S. Department of Energy, Carlsbad Field Office, Carlsbad, New Mexico.

Table 2.5-1 – Minimum Filter Vent Specifications

Container Type	Minimum Filter Vent Specification		
	Flow Rate (ml/min of air, STP⑧, at 1 inch of water)①	**Efficiency (percent)**	**Total Hydrogen Diffusivity (mol/s/mol fraction⑨ at 25°C)②③**
55-Gallon Drum④	35	>99.9⑤	1.90E-6
85-Gallon Drum	35	>99.9⑤	3.70E-6
100-Gallon Drum	35	>99.9	3.70E-6
Pipe Component⑥	35	NA⑤⑩	1.90E-6
Filtered Confinement Layer (e.g., Metal Can)⑦	35	NA⑤⑩	1.90E-6
SWB	35	>99.9⑤	7.40E-6
Bin	35	NA⑤⑩	7.40E-6
TDOP	35	>99.9	3.33E-5
Filtered Bag⑥	35	NA⑤⑩	1.075E-5
High-Diffusivity Filters (HDF)			
HDF (2X)	35	>99.9⑤	7.40E-6
HDF (5X)	35	>99.9⑤	1.85E-5
HDF (25X)	35	>99.9⑤	9.25E-5
HDF (100X)	35	>99.9⑤	3.70E-4
High-Diffusivity Bag Filters (HDBF)			
HDBF (2X)⑥	35	NA⑤⑩	2.150E-5
HDBF (5X)⑥	35	NA⑤⑩	5.375E-5
HDBF (25X)⑥	35	NA⑤⑩	2.688E-4
HDBF (100X)⑥	35	NA⑤⑩	1.075E-3

Notes:

① Filters tested at a different pressure gradient shall have a proportional flow rate (e.g., 35 ml/min at 1 inch of water = 1 Liter/minute at 1 pound per square inch).

② Total hydrogen diffusivity may be achieved through the use of multiple filter vents.

③ Filters exceeding these specifications may be used to decrease the resistance to hydrogen diffusivity in accordance with the logic outlined in Appendix 2.2 of the CH-TRU Payload Appendices.[1]

④ The use of equivalent venting mechanisms is not allowed for 55-gallon drums used as part of the pipe overpack configuration.

⑤ Filters installed in payload containers that are overpacked in drums, SWBs, or TDOPs are exempt from the efficiency requirement as the outer payload container must exhibit a >99.9 percent efficiency.

⑥ The use of equivalent venting mechanisms is not allowed.

⑦ Filtered confinement layer specification is not applicable to Waste Material Type II.2 (packaged in a metal can) due to zero gas generation potential.

⑧ ml/min of air, STP = Milliliter(s) per minute of air, standard temperature and pressure

⑨ mol/s/mol fraction = Moles per second per mole fraction

⑩ NA = Not applicable

2.5.2 Methods of Compliance and Verification

Compliance shall be by one, or a combination, of the following methods:

- Administrative and procurement controls demonstrating that filter vents have been procured to the specifications of Section 2.5.1.
- Visual inspection to the specifications of Section 2.5.1.
- Sampling by measurement of filter characteristics to the specifications of Section 2.5.1.

If sampling by measurement is selected as the compliance method, the test methods used to determine the compliance of filter vents or equivalent venting mechanisms with the minimum performance-based requirements specified in Table 2.5-1 and this section shall be directed by procedures under a QA program. For equivalent venting mechanisms, compliance with the minimum total hydrogen diffusivity per container type specified in Table 2.5-1 shall be demonstrated through documentation for the equivalent venting mechanism used.

This page intentionally left blank.

2.6 Liquids

2.6.1 Requirements

Liquid waste is prohibited in payload containers, except for residual amounts in well-drained containers. The total volume of residual liquid in a payload container shall be less than 1 percent (volume) of the payload container.

2.6.2 Methods of Compliance and Verification

Compliance shall be by one, or a combination, of the following methods:

- Review of records and database information, which may include knowledge of process
- Radiography
- Visual examination
- Sampling program.

This page intentionally left blank.

2.7 Sharp or Heavy Objects

2.7.1 Requirements

Sharp or heavy objects in the waste shall be blocked, braced, or suitably packaged as necessary to provide puncture protection for the payload containers packaging these objects.

2.7.2 Methods of Compliance and Verification

Compliance shall be by one, or a combination, of the following methods:

- Review of records and database information, which may include knowledge of process
- Radiography
- Visual examination
- Sampling program.

This page intentionally left blank.

2.8 Sealed Containers

2.8.1 Requirements

Sealed containers that are greater than 4 liters (nominal) are prohibited except for Waste Material Type II.2 packaged in a metal container; Waste Material Type II.2 in metal cans does not generate any flammable gas (see Appendix 3.2 of the CH-TRU Payload Appendices[1]).

2.8.2 Methods of Compliance and Verification

Compliance shall be by one, or a combination, of the following methods:

- Review of records and database information, which may include knowledge of process
- Radiography
- Visual examination
- Sampling program.

[1] U.S. Department of Energy (DOE), *CH-TRU Payload Appendices*, U.S. Department of Energy, Carlsbad Field Office, Carlsbad, New Mexico.

This page intentionally left blank.

2.9 Payload Container/Assembly Configuration Specifications

2.9.1 55-Gallon Drum

The 55-gallon drum is authorized for transport within the TRUPACT-II and the HalfPACT (Figure 2.9-1). The TRUPACT-II will accommodate 14 55-gallon drums (Figure 2.9-2), and the HalfPACT will accommodate seven 55-gallon drums (Figure 2.9-3). The approximate dimensions of the 55-gallon drum are given in Table 2.9-1.

Table 2.9-1 – 55-Gallon Drum Dimensions

Dimension	Approximate Measurement (inches)	
	Inside Dimension	Outside Dimension
Height	33¼	35
Diameter	22½	24

The 55-gallon-drum body, lid, and lid ring are constructed of steel. A gasket, of tubular or foam styrene-butadiene, neoprene rubber, or equivalent, is required for outer drum lid closure. The drum must be vented as specified in Section 2.5. An optional, rigid, polyethylene liner and lid may be used inside the drum. If a lid is used with the liner, the liner lid must contain a 0.3-inch (in.) minimum diameter hole, or a filter with a hydrogen release rate equivalent to or greater than a 0.3-in. minimum diameter hole. Otherwise, the liner must be treated as any other confinement layer with the associated resistance of the liner hole diameter or filter calculated in accordance with Appendix 2.2 of the CH-TRU Payload Appendices.[1] An optional steel inner lid with an optional gasket may be used inside the drum (i.e., a double-lid drum). A double-lid drum with a filtered inner lid will be considered the same as a drum with a filtered inner confinement layer. Table 2.9-2 presents the 55-gallon drum construction materials. Table 2.9-3 specifies the weights associated with the 55-gallon drum that are applicable to shipment within the TRUPACT-II and the HalfPACT.

[1] U.S. Department of Energy (DOE), *CH-TRU Payload Appendices*, U.S. Department of Energy, Carlsbad Field Office, Carlsbad, New Mexico.

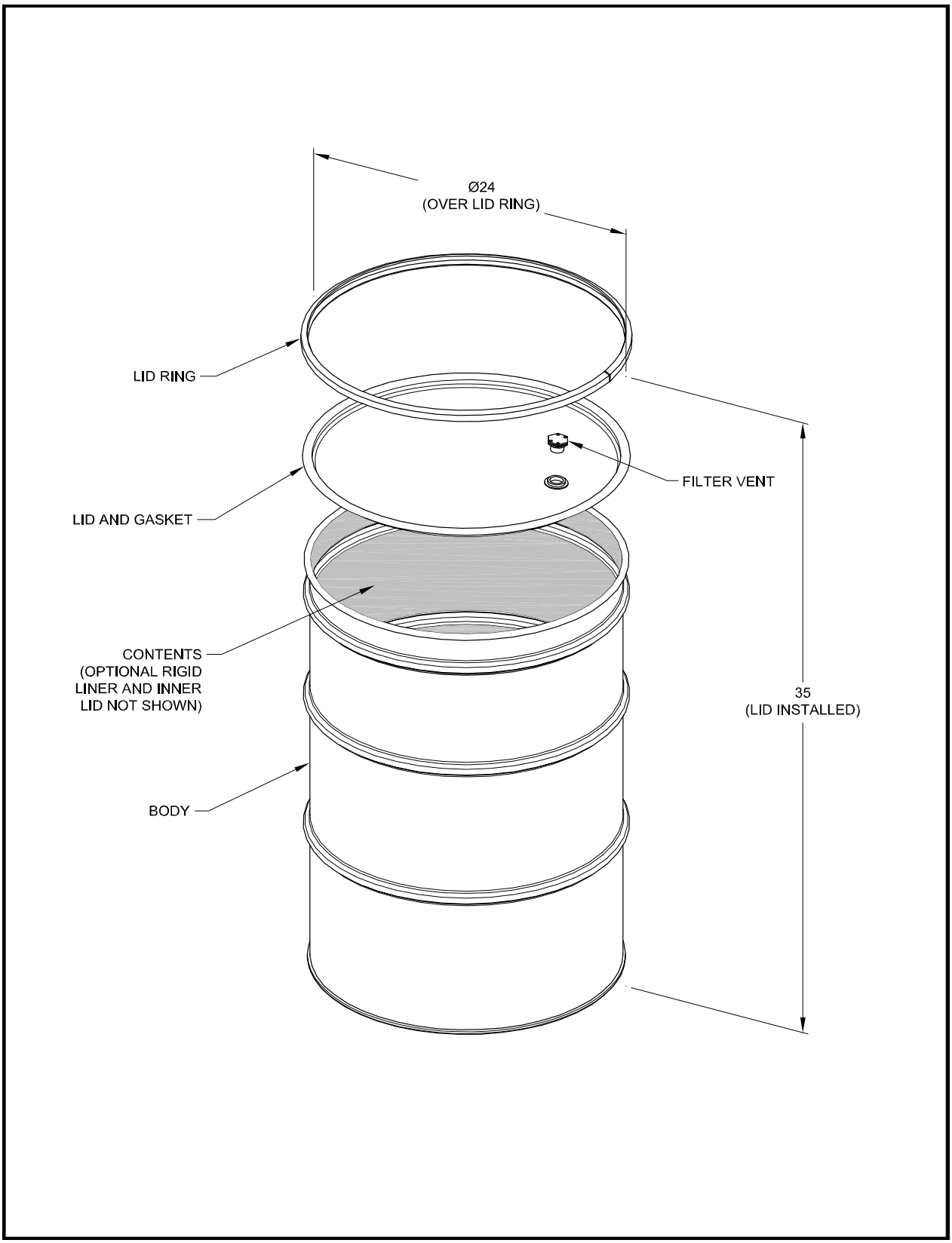

Figure 2.9-1 – 55-Gallon Drum

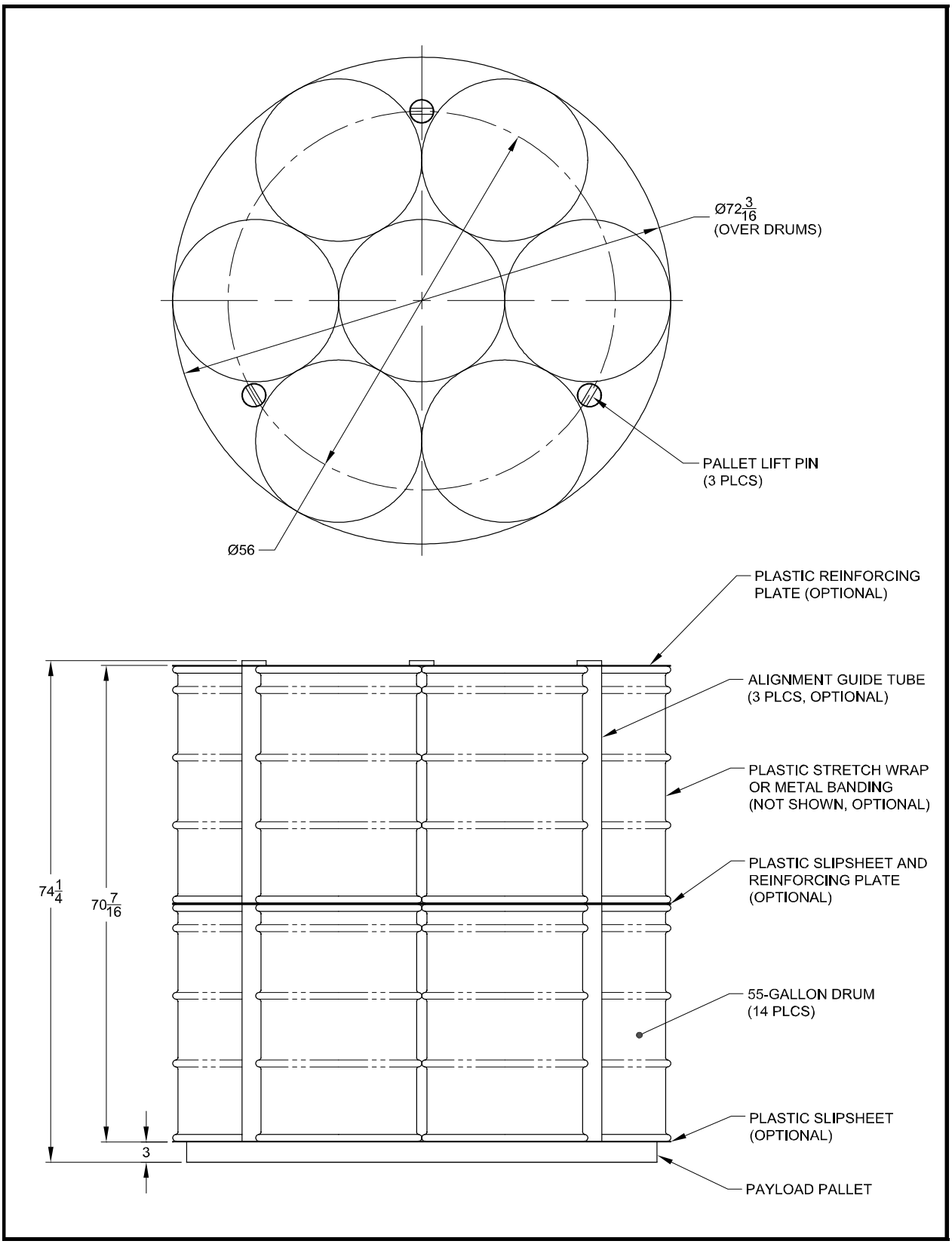

Figure 2.9-2 – TRUPACT-II: Fourteen 55-Gallon Drum Payload

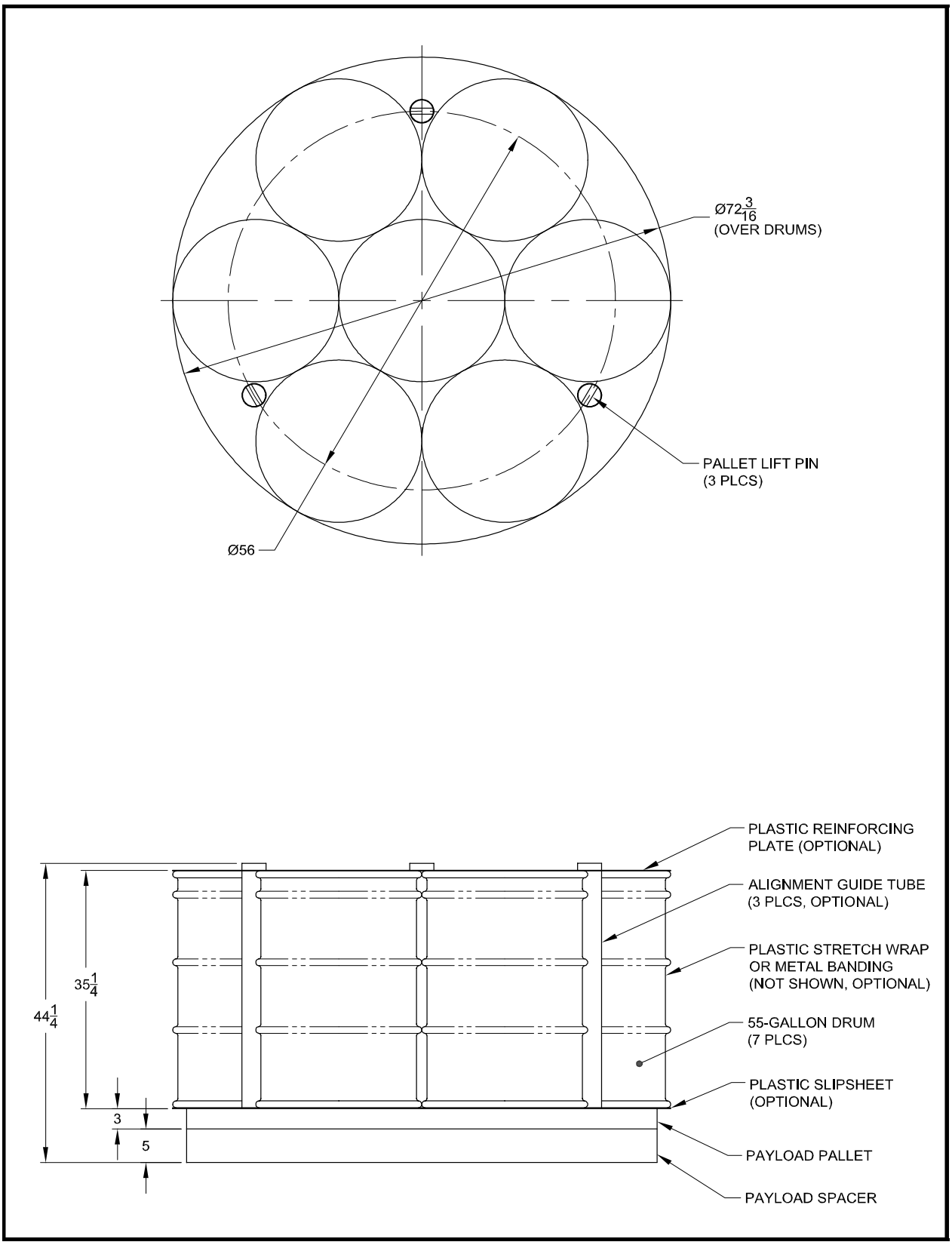

Figure 2.9-3 – HalfPACT: Seven 55-Gallon Drum Payload

Table 2.9-2 – 55-Gallon Drum Materials of Construction

55-Gallon Drum Component	Material
Body, lid, and lid ring	Steel
Rigid liner and liner lid (optional)	Polyethylene
Inner lid (optional)	Steel
Gasket	Type I - Tubular styrene-butadiene, or equivalent Type II - Foam styrene-butadiene, or equivalent Type III - Neoprene rubber, or equivalent

Table 2.9-3 – 55-Gallon Drum Weights

Component	Weight (pounds)	
	Approximate Empty	Maximum Gross
55-gallon drum	60	1,000

CH-TRU waste may be directly loaded into a 55-gallon drum or may be loaded into a pipe component, which is then overpacked in a 55-gallon drum. The latter configuration constitutes a standard pipe overpack, S100 pipe overpack, S200 pipe overpack, or S300 pipe overpack (see Sections 2.9.2, 2.9.3, 2.9.4, or 2.9.5, respectively). Empty 55-gallon drums used as dunnage to complete a payload must also meet the specifications presented in this section with the exception that dunnage containers shall have at least one open vent port (i.e., not filtered or plugged). Table 2.9-4 identifies material content forms authorized for transport within a 55-gallon drum.

Table 2.9-4 – 55-Gallon Drum: Material Content Forms Authorized for Transport

Form Number	Description
1	Direct load: Solids, any particle size (e.g., fine powder or inorganic particulates)
2	Direct load: Solids, large particle size (e.g., sand, concrete, or debris)
3	Direct load: Solids, large objects (e.g., metal cans containing waste)

2.9.2 Standard Pipe Overpack

The standard pipe overpack consists of a pipe component positioned by fiberboard/plywood dunnage within a 55-gallon drum with a high-density polyethylene rigid liner and lid (Figure 2.9-4). Appendix 1.3.1 of the TRUPACT-II Safety Analysis Report (SAR)[2], Appendix 1.3.1 of the HalfPACT SAR[3], and Appendix 4.1 of the CH-TRU Payload Appendices[1] provide detailed descriptions of this payload container. The TRUPACT-II will accommodate 14 standard pipe overpacks (Figure 2.9-2), and the HalfPACT will accommodate 7 standard pipe overpacks (Figure 2.9-3). Standard pipe overpacks may be assembled in a TRUPACT-II or HalfPACT payload with 55-gallon drums. Standard pipe overpacks in this payload assembly are considered 55-gallon drums and are subject to the specifications of Section 2.9.1. The pipe component is available in two sizes as specified in Table 2.9-5.

Table 2.9-5 – Pipe Component Dimensions

Pipe Component Size	Dimension	Maximum Measurement (inches)	Bolt Size (inches)	Number of Bolts	Minimum Bolted Flange Diameter (inches)
6-inch	Diameter	6.7 Outside Diameter	3/4	8	11
	Height	27.5 Overall			
12-inch	Diameter	12.8 Outside Diameter	7/8	12	16.3
	Height	27.5 Overall			

The pipe component body, lid, and bolt flange are constructed of stainless steel. A butyl rubber or ethylene propylene O-ring is required for pipe component closure. One or more bolts may have tamper-resistant heads and/or may have a thread-locking compound applied to the threads. The pipe component and the overpacking 55-gallon drum must be vented as specified in Section 2.5. Table 2.9-6 presents the pipe component construction materials.

[2] U.S. Department of Energy (DOE), *TRUPACT-II Shipping Package Safety Analysis Report*, USNRC Certificate of Compliance 71-9218, U.S. Department of Energy, Carlsbad Area Office, Carlsbad, New Mexico.

[3] U.S. Department of Energy (DOE), *HalfPACT Shipping Package Safety Analysis Report*, USNRC Certificate of Compliance 71-9279, U.S. Department of Energy, Carlsbad Area Office, Carlsbad, New Mexico.

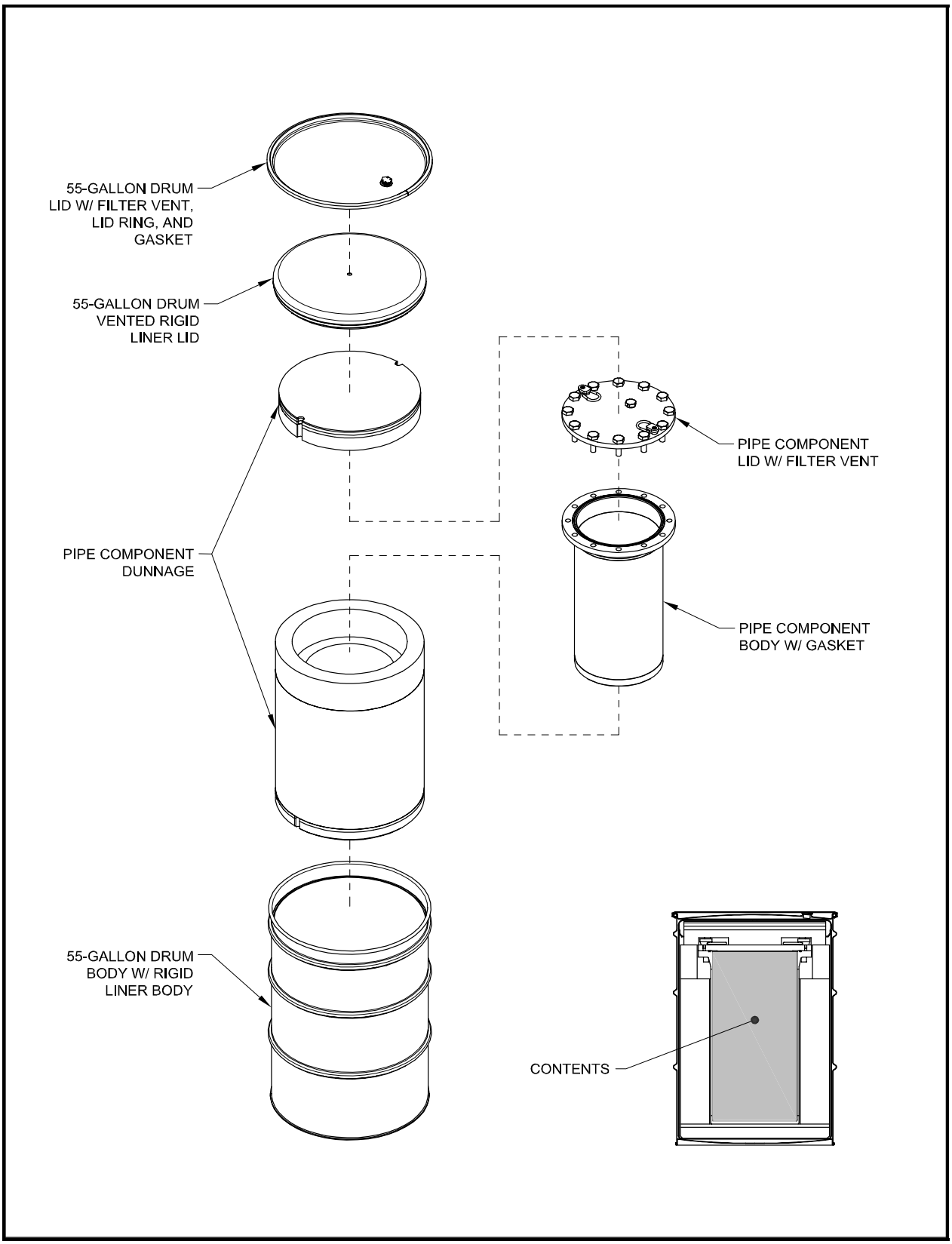

Figure 2.9-4 – Standard Pipe Overpack

Table 2.9-6 – Pipe Component Materials of Construction

Component	Material
Body, lid, and bolt flange	Stainless steel
Gasket	Butyl rubber or ethylene propylene O-ring

Table 2.9-7 specifies the weights associated with the pipe component that are applicable to shipment within the TRUPACT-II and the HalfPACT.

Table 2.9-7 – Pipe Component Weights

Pipe Component Size	Pipe Component Weight (pounds)	
	Maximum Contents	Maximum Gross
6-in.-diameter pipe component only	66	153
12-in.-diameter pipe component only	225	407

The maximum allowable weights of the pipe overpacks are bounded by the as-tested weights. Compliance with the maximum gross weight limits for both the pipe component and the pipe overpack is required. Table 2.9-8 specifies the weights associated with the standard pipe overpack that are applicable to shipment within the TRUPACT-II and the HalfPACT.

Table 2.9-8 – Standard Pipe Overpack Weights

Size of Pipe Component Overpacked	Maximum Gross Weight (pounds)
6-in.-diameter pipe component overpacked in a 55-gallon drum	328
12-in.-diameter pipe component overpacked in a 55-gallon drum	547

Table 2.9-9 identifies material content forms authorized for transport within a pipe overpack.

Table 2.9-9 – Standard Pipe Overpack: Material Content Forms Authorized for Transport

Form Number	Description
1	Direct load: Solids, any particle size (e.g., fine powder or inorganic particulates)
2	Direct load: Solids, large particle size (e.g., sand, concrete, or debris)
3	Direct load: Solids, large objects (e.g., metal cans containing waste)

2.9.3 S100 Pipe Overpack

The S100 pipe overpack is a shielded version of the standard pipe overpack described in Section 2.9.2. It consists of a 6-in. diameter pipe component positioned within a 55-gallon drum by means of fiberboard/plywood dunnage and neutron shielding materials, as shown schematically in Figure 2.9-5. The 6-in. diameter pipe component used in the S100 pipe overpack is identical to the 6-in. diameter pipe component for the standard pipe overpack described in Section 2.9.2. The 12-in. diameter pipe component is not used in the S100 pipe overpack. Appendix 1.3.1 of the TRUPACT-II SAR[2], Appendix 1.3.1 of the HalfPACT SAR[3], and Appendix 4.2 of the CH-TRU Payload Appendices[1] provide detailed descriptions of this payload container. The TRUPACT-II will accommodate 14 S100 pipe overpacks (Figure 2.9-2), and the HalfPACT will accommodate 7 S100 pipe overpacks (Figure 2.9-3). The 6-in. diameter pipe component dimensions are specified in Table 2.9-5. The pipe component materials of construction are specified in Table 2.9-6. The pipe component and the overpacking 55-gallon drum must be vented as specified in Section 2.5.

The neutron shield around the side of the pipe component may be in the form of a casting (such as a commercial neutron shielding casting compound), a solid monolith (such as a molded or machined unit of solid plastic), or fabricated component (such as a tightly wound roll of plastic film or other built-up fabrication). The end plugs and shield sleeve within the pipe component are made of a rigid plastic. Nominal dimensions are specified in Table 2.9-10.

Table 2.9-10 – Shield Nominal Dimensions

Item	Inside Diameter (inches)	Outside Diameter (inches)	Length (inches)
Side neutron shielding①	7.0	21.5	26.7
Shield sleeve	3.25	6.0	12.0
End shield plugs	Not applicable	6.0	6.5

Note:

① Dimensions do not include the outer high-density polyethylene rigid drum liner.

The shielding materials of construction are specified in Table 2.9-11.

Table 2.9-11 – Shield Materials of Construction

Item	Material
Side neutron shielding	High-density polyethylene or equivalent neutron shielding material (see Appendix 4.2 of the CH-TRU Payload Appendices[1])
End shield plugs and shield sleeve	High-density polyethylene

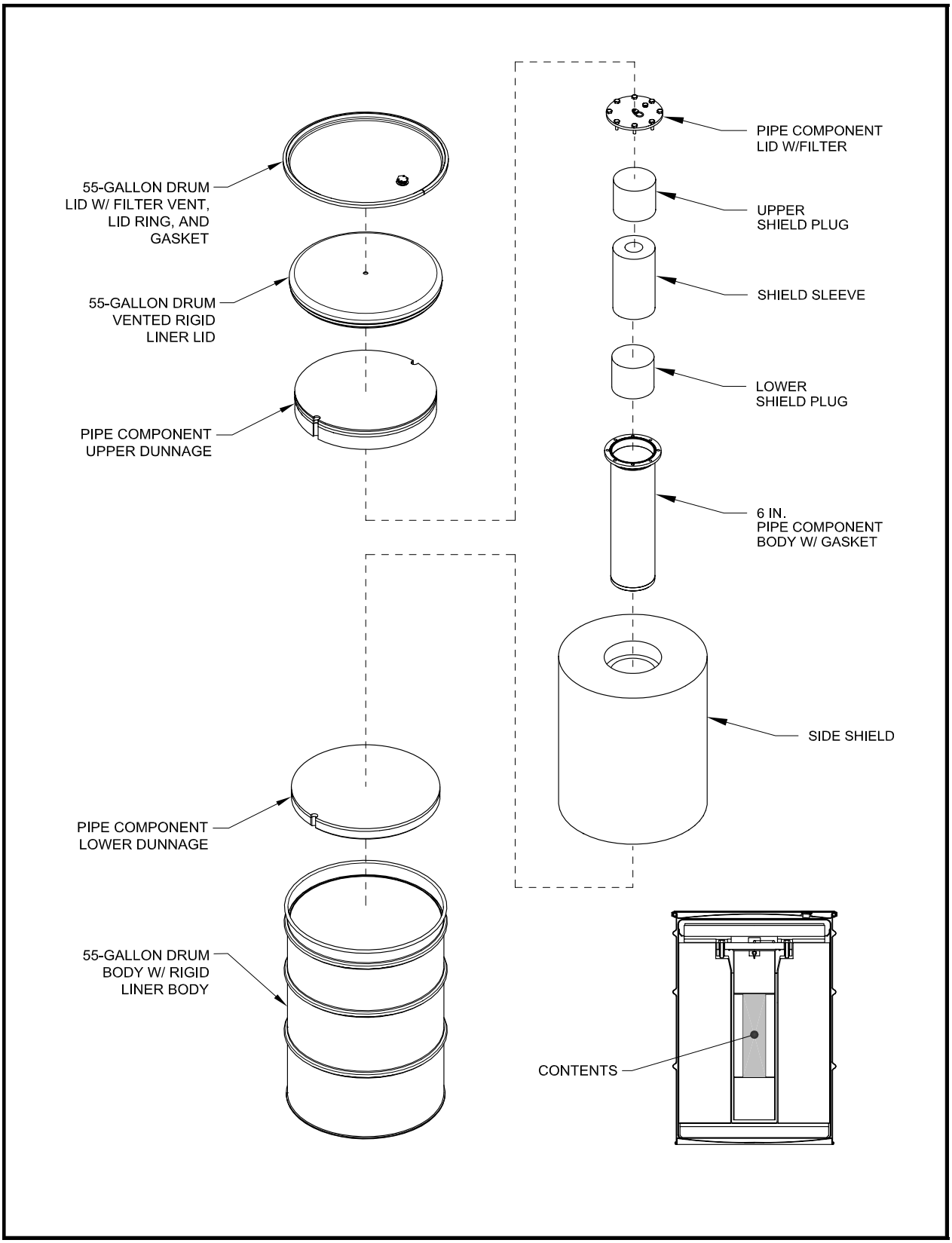

Figure 2.9-5 – S100 Pipe Overpack

The maximum allowable contents weight of the pipe component is 66 pounds (lbs.) and the maximum allowable gross weight of the loaded pipe component is 153 lbs., which is consistent with the 6-in. diameter pipe component weights specified in Table 2.9-7. The maximum allowable gross weight of the S100 pipe overpack is 550 lbs., which accommodates the weight of the side neutron shielding, as described in Appendix 4.2 of the CH-TRU Payload Appendices.[1] Table 2.9-12 summarizes the nominal individual and maximum total weights associated with the shielded 6-in. diameter pipe component that are applicable to shipment within the TRUPACT-II and the HalfPACT.

Table 2.9-12 – 6-inch Diameter Pipe Component Weights

Item	Type	Weight (pounds)
End shield plugs and shield sleeve	Nominal	22
Payload	Nominal	44
Total (Contents)	Maximum	66
Total (Pipe Component)	Maximum	153

The authorized material content form for the S100 pipe overpack is specified in Table 2.9-13.

Table 2.9-13 – S100 Pipe Overpack: Material Content Form Authorized for Transport

Form Number	Description
1	Sealed neutron sources

2.9.4 S200 Pipe Overpack

The S200 pipe overpack is a shielded version of the standard pipe overpack described in Section 2.9.2. It consists of a gamma-shield insert located by rigid polyurethane foam dunnage inside a 12-in. diameter pipe component positioned within a 55-gallon drum by means of fiberboard/plywood dunnage. A schematic of the S200 pipe overpack is shown in Figure 2.9-6, with detailed descriptions provided in Appendix 1.3.1 of the TRUPACT-II SAR[2], Appendix 1.3.1 of the HalfPACT SAR[3], and Appendix 4.3 of the CH-TRU Payload Appendices.[1] The 12-in. diameter pipe component used in the S200 pipe overpack is identical to the 12-in. diameter pipe component described for the standard pipe overpack in Section 2.9.2. The 6-in. diameter pipe component is not used in the S200 pipe overpack. The TRUPACT-II will accommodate 14 S200 pipe overpacks (Figure 2.9-2), and the HalfPACT will accommodate 7 S200 pipe overpacks (Figure 2.9-3). The 12-in. diameter pipe component dimensions and materials of construction are specified in Table 2.9-5 and Table 2.9-6, respectively. The pipe component and the overpacking 55-gallon drum must be vented as specified in Section 2.5. The gamma-shield insert is a lead two-component assembly consisting of a cylindrical body with an integral bottom cap and a detachable lid. The shield insert is available in two sizes as specified in Table 2.9-14. A mixture of S200-A and S200-B pipe overpacks may be assembled into a single payload.

Table 2.9-14 – Shield Insert Nominal Dimensions

Size	Thickness (inches)	Inside Diameter (inches)	Inside Height (inches)	Outside Diameter (inches)	Outside Height (inches)
S200-A	1.000	8.125	8.125	10.125	10.625
S200-B	0.600	8.125	16.125	9.325	17.825

The shield insert body, lid, and dunnage materials of construction are specified in Table 2.9-15.

Table 2.9-15 – Shield Insert Materials of Construction

Item	Material
Body, lid	Lead
Dunnage	Rigid polyurethane foam

The maximum allowable weight of 12-in. diameter pipe component contents (shield insert assembly plus payload) is 225 lbs., and the maximum gross weight of the loaded 12-in. diameter pipe component is 407 lbs., which are consistent with the 12-in. diameter pipe component weights specified in Table 2.9-7. The maximum allowable gross weight of the loaded S200 pipe overpack is 547 lbs., which is consistent with the weights specified in Table 2.9-8. Table 2.9-16 summarizes the nominal individual and maximum total weights associated with the shield insert assembly components and payload that are applicable to shipment within the TRUPACT-II and the HalfPACT.

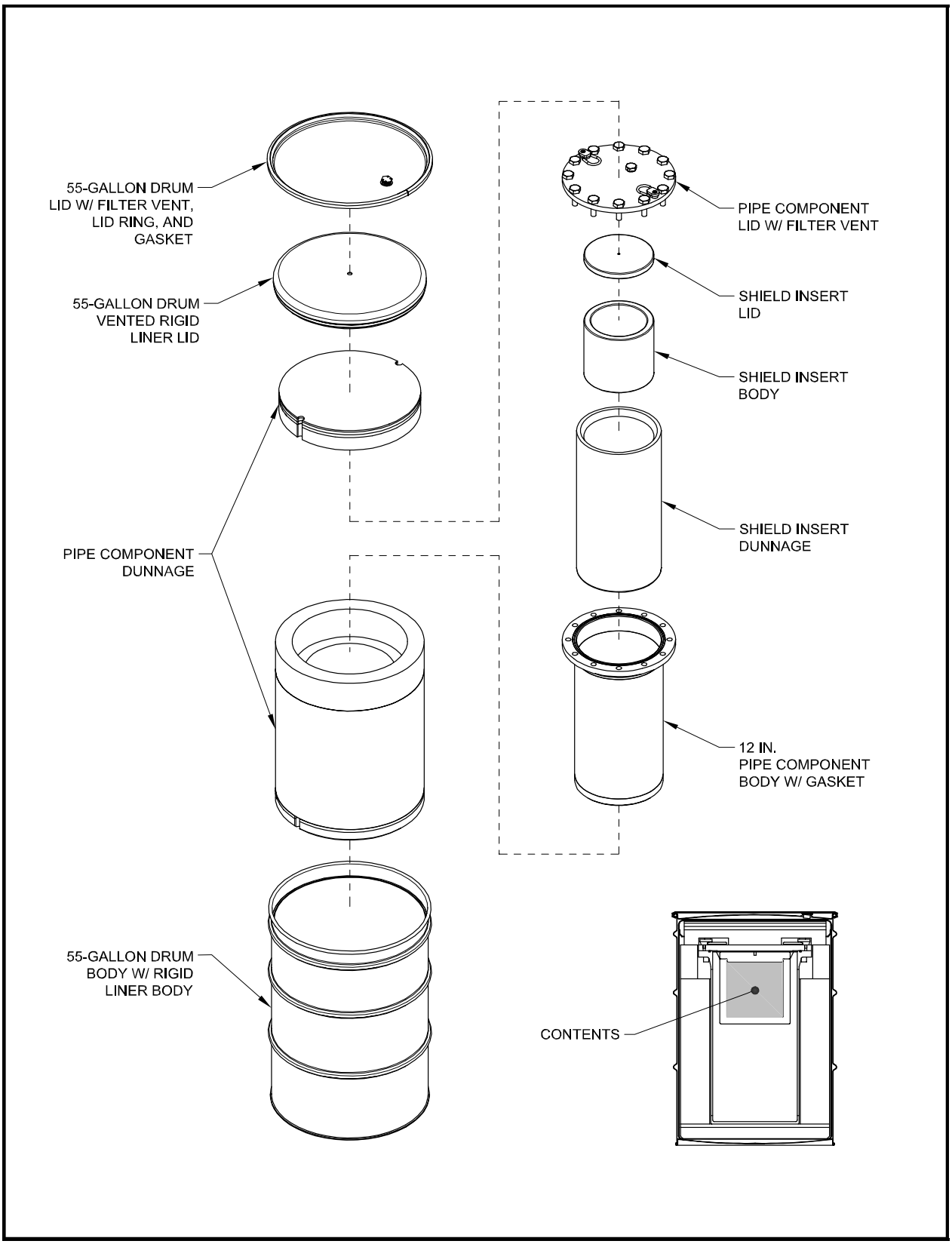

Figure 2.9-6 – S200 Pipe Overpack

Table 2.9-16 – 12-inch Pipe Component Weights

Item	Type	Weight	
		S200-A (pounds)	S200-B (pounds)
Shield Insert Body	Nominal	134	129
Shield Insert Lid	Nominal	43	27
Shield Insert Dunnage	Nominal	18	15
Payload	Nominal	25	50
Total (Contents)	Maximum	225	225
Total (Pipe Component)	Maximum	407	407

Table 2.9-17 identifies material content forms authorized for transport within an S200 pipe overpack.

Table 2.9-17 – S200 Pipe Overpack: Material Content Forms Authorized for Transport

Form Number	Description
1	Direct load: Solids, any particle size (e.g., fine powder or inorganic particulates)
2	Direct load: Solids, large particle size (e.g., sand, concrete, or debris)
3	Direct load: Solids, large objects (e.g., metal cans containing waste)

2.9.5 S300 Pipe Overpack

The S300 pipe overpack is a shielded version of the standard pipe overpack described in Section 2.9.2. It consists of a neutron-shield insert located inside a 12-in. diameter pipe component positioned within a 55-gallon drum by means of fiberboard/plywood dunnage. A schematic of the S300 pipe overpack is shown in Figure 2.9-7, with detailed descriptions provided in Appendix 1.3.1 of the TRUPACT-II SAR[2], Appendix 1.3.1 of the HalfPACT SAR[3], and Appendix 4.4 of the CH-TRU Payload Appendices.[1] The 12-in. diameter pipe component used in the S300 pipe overpack is identical to the 12-in. diameter pipe component described for the standard pipe overpack in Section 2.9.2. The 6-in. diameter pipe component is not used in the S300 pipe overpack. The TRUPACT-II will accommodate 14 S300 pipe overpacks (Figure 2.9-2), and the HalfPACT will accommodate 7 S300 pipe overpacks (Figure 2.9-3). The 12-in. diameter pipe component dimensions and materials of construction are specified in Table 2.9-5 and Table 2.9-6, respectively. The pipe component and the overpacking 55-gallon drum must be vented as specified in Section 2.5. The neutron shield insert is a two-part assembly consisting of a cylindrical body and stepped lid made from solid, high-density polyethylene with dimensions given in Table 2.9-18.

Table 2.9-18 – Shield Insert Nominal Dimensions

Inside Diameter (inches)	Inside Height (inches)	Outside Diameter (inches)	Outside Height (inches)
3.5	17.0	11.75	24.75

The shield insert body and lid materials of construction are specified in Table 2.9-19.

Table 2.9-19 – Shield Insert Materials of Construction

Item	Material
Body, lid	High-Density Polyethylene

The maximum allowable weight of 12-in. diameter pipe component contents (shield insert plus payload) is 225 lbs., and the maximum gross weight of the loaded 12-in. diameter pipe component is 407 lbs., which are consistent with the 12-in. diameter pipe component weights specified in Table 2.9-7. The maximum allowable gross weight of the loaded S300 pipe overpack is 547 lbs., which is consistent with the data given in Table 2.9-8. Table 2.9-20 summarizes the nominal individual and maximum total weights associated with the shield insert and payload that are applicable to shipment within the TRUPACT-II and the HalfPACT.

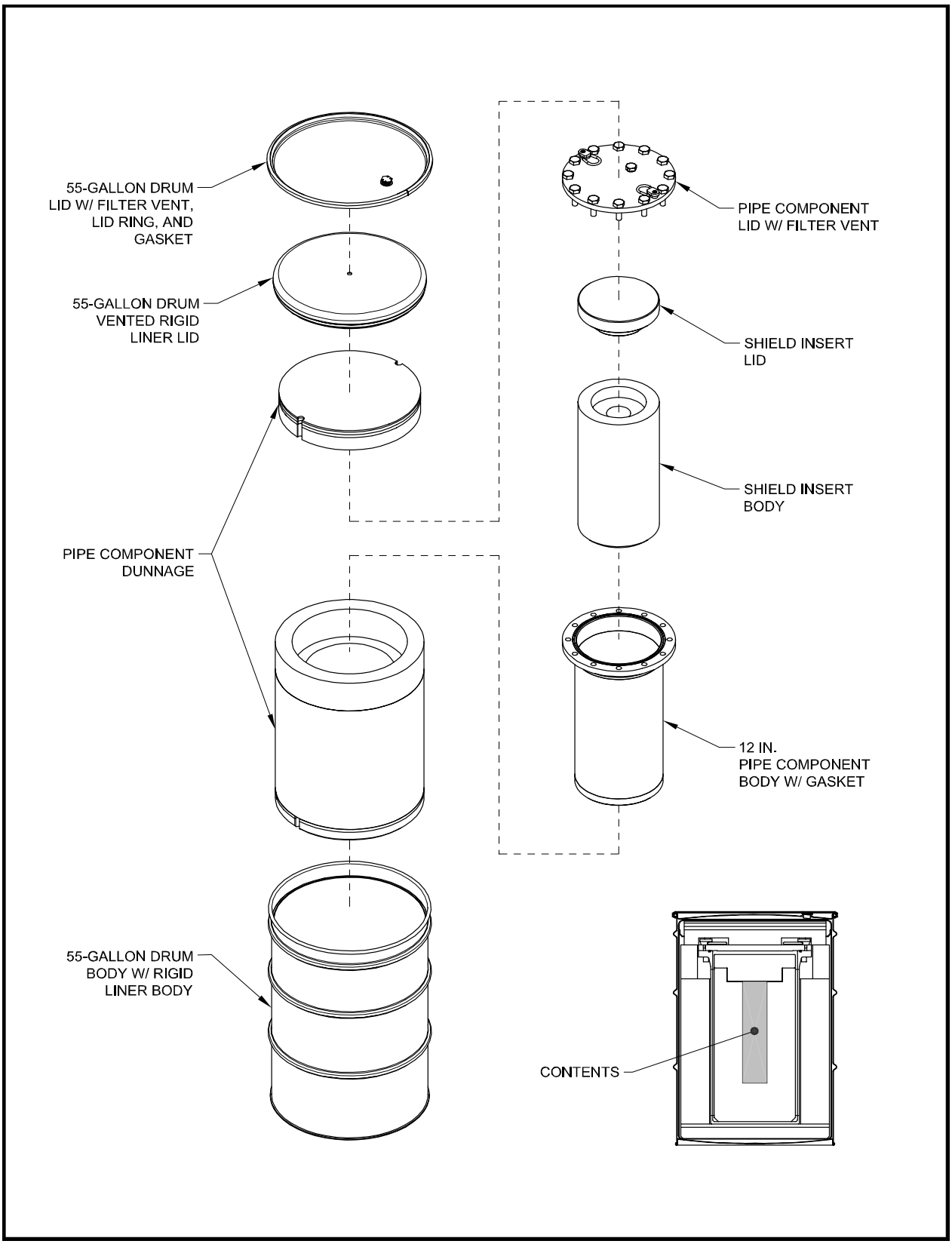

Figure 2.9-7 – S300 Pipe Overpack

Table 2.9-20 – 12-inch Pipe Component Weights

Item	Type	Weight (pounds)
Shield Insert Body and Lid	Nominal	87
Payload	Nominal	138
Total (Contents)	Maximum	225
Total (Pipe Component)	Maximum	407

Table 2.9-21 identifies material content forms authorized for transport within an S300 pipe overpack.

Table 2.9-21 – S300 Pipe Overpack: Material Content Form Authorized for Transport

Form Number	Description
1	Sealed neutron sources

2.9.6 85-Gallon Drum

The 85-gallon drum is authorized for transport within the TRUPACT-II and the HalfPACT. The term "85-gallon drum" refers to drums with a range of dimensions yielding 75 to 88 gallons. The short 85-gallon drum is authorized for transport within the TRUPACT-II, and the short and tall 85-gallon drums are authorized for transport within the HalfPACT (Figure 2.9-8 and Figure 2.9-9). The TRUPACT-II will accommodate eight short 85-gallon drums (Figure 2.9-10), and the HalfPACT will accommodate four short 85-gallon drums (Figure 2.9-11) or four tall 85-gallon drums (Figure 2.9-12). The approximate dimensions of the 85-gallon drum are given in Table 2.9-22.

Table 2.9-22 – 85-Gallon Drum Dimensions

Dimension	Approximate Measurement (inches)			
	Short Drum		Tall Drum	
	Inside Dimension	Outside Dimension	Inside Dimension	Outside Dimension
Height	33¼	35	38¼	40¼
Diameter	27⅛	29¾	26	28⅝

The 85-gallon drum body, lid, and lid ring are constructed of steel. A gasket, of tubular or foam styrene-butadiene, neoprene rubber, or equivalent, is required for outer drum lid closure. The drum must be vented as specified in Section 2.5. An optional, rigid, polyethylene liner and lid may be used inside the drum. If a lid is used with the liner, the liner lid must contain a 0.3-in. minimum diameter hole, or a filter with a hydrogen release rate equivalent to or greater than a 0.3-in. minimum diameter hole. Otherwise, the liner must be treated as any other confinement layer with the associated resistance of the liner hole diameter or filter calculated in accordance with Appendix 2.2 of the CH-TRU Payload Appendices.[1] An optional steel inner lid with an optional gasket may be used inside the drum (i.e., a double-lid drum). A double-lid drum with a filtered inner lid will be considered the same as a drum with a filtered inner confinement layer. Table 2.9-23 presents the 85-gallon drum construction materials. Table 2.9-24 specifies the weights associated with the 85-gallon drum that are applicable to shipment within the TRUPACT-II and the HalfPACT.

CH-TRU waste may be directly loaded into an 85-gallon drum or may be loaded into a 55-gallon drum, which is then overpacked in an 85-gallon drum (referred to as an 85-gallon drum overpack). If an empty 85-gallon drum is used as dunnage to complete a payload of four or eight 85-gallon drums, it must also meet the specifications presented in this section with the exception that dunnage containers shall have at least one open vent port (i.e., not filtered or plugged). Table 2.9-25 identifies material content forms authorized for transport within an 85-gallon drum.

Table 2.9-23 – 85-Gallon Drum Materials of Construction

85-Gallon Drum Component	Material
Body, lid, and lid ring	Steel
Rigid liner and liner lid (optional)	Polyethylene
Inner lid (optional)	Steel
Gasket	Type I - Tubular styrene-butadiene, or equivalent Type II - Foam styrene-butadiene, or equivalent Type III - Neoprene rubber, or equivalent

Table 2.9-24 – 85-Gallon Drum Weights

Component	Weight (pounds)	
	Approximate Empty	Maximum Gross
85-gallon drum	81	1,000

Table 2.9-25 – 85-Gallon Drum: Material Content Forms Authorized for Transport

Form Number	Description
1	Direct load: Solids, any particle size (e.g., fine powder or inorganic particulates)
2	Direct load: Solids, large particle size (e.g., sand, concrete, or debris)
3	Direct load: Solids, large objects (e.g., metal cans containing waste)

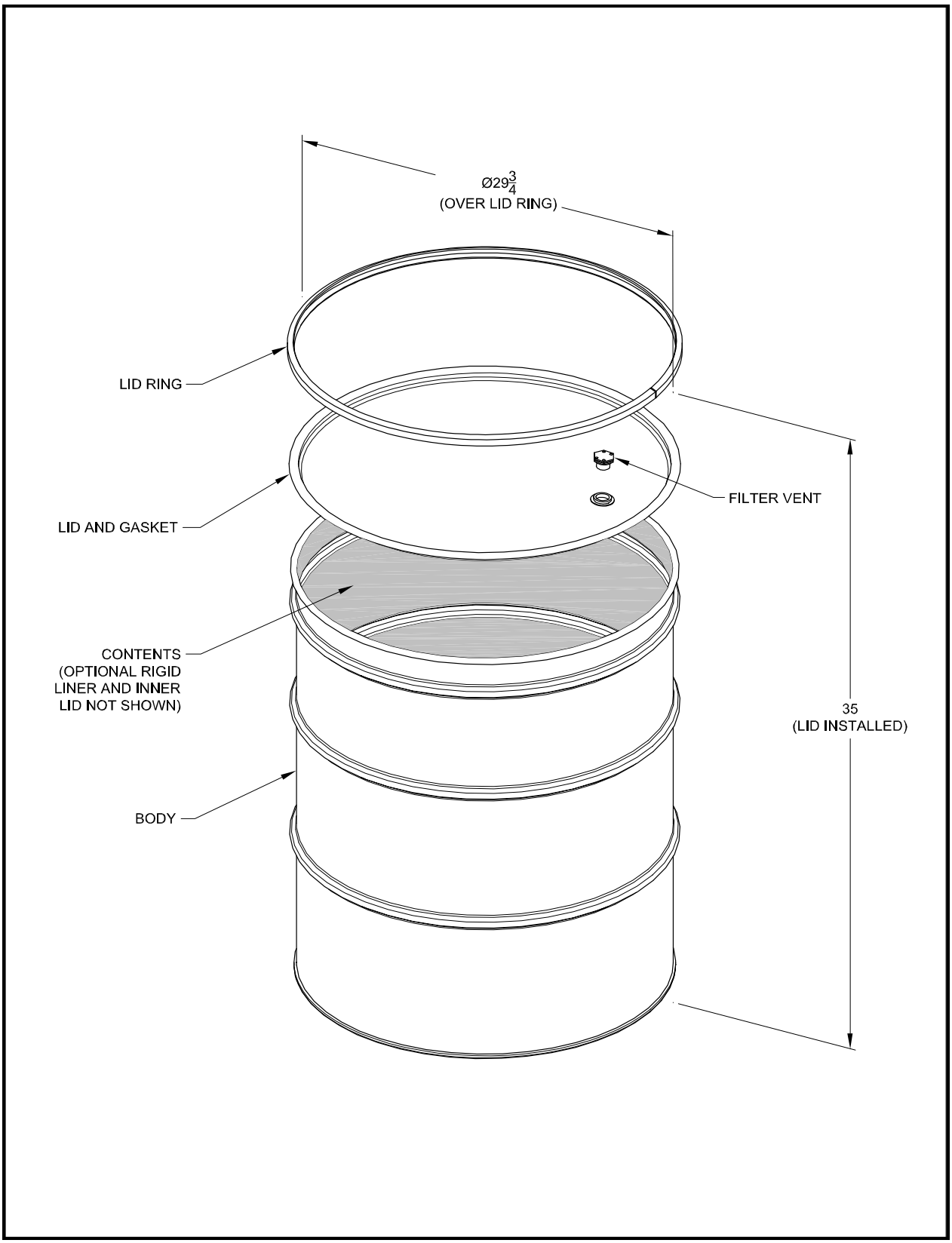

Figure 2.9-8 – 85-Gallon Drum (Short)

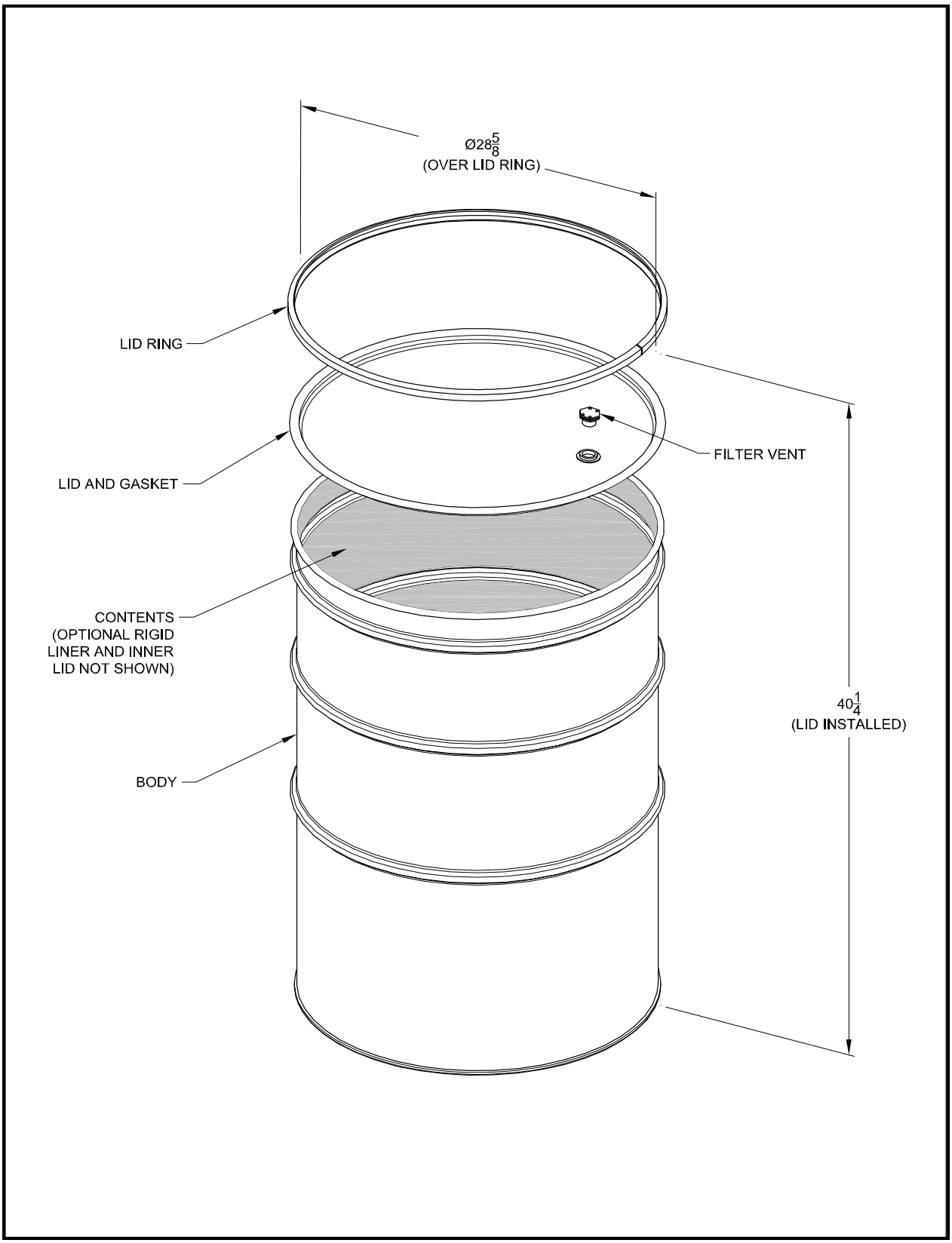

Figure 2.9-9 – 85-Gallon Drum (Tall)

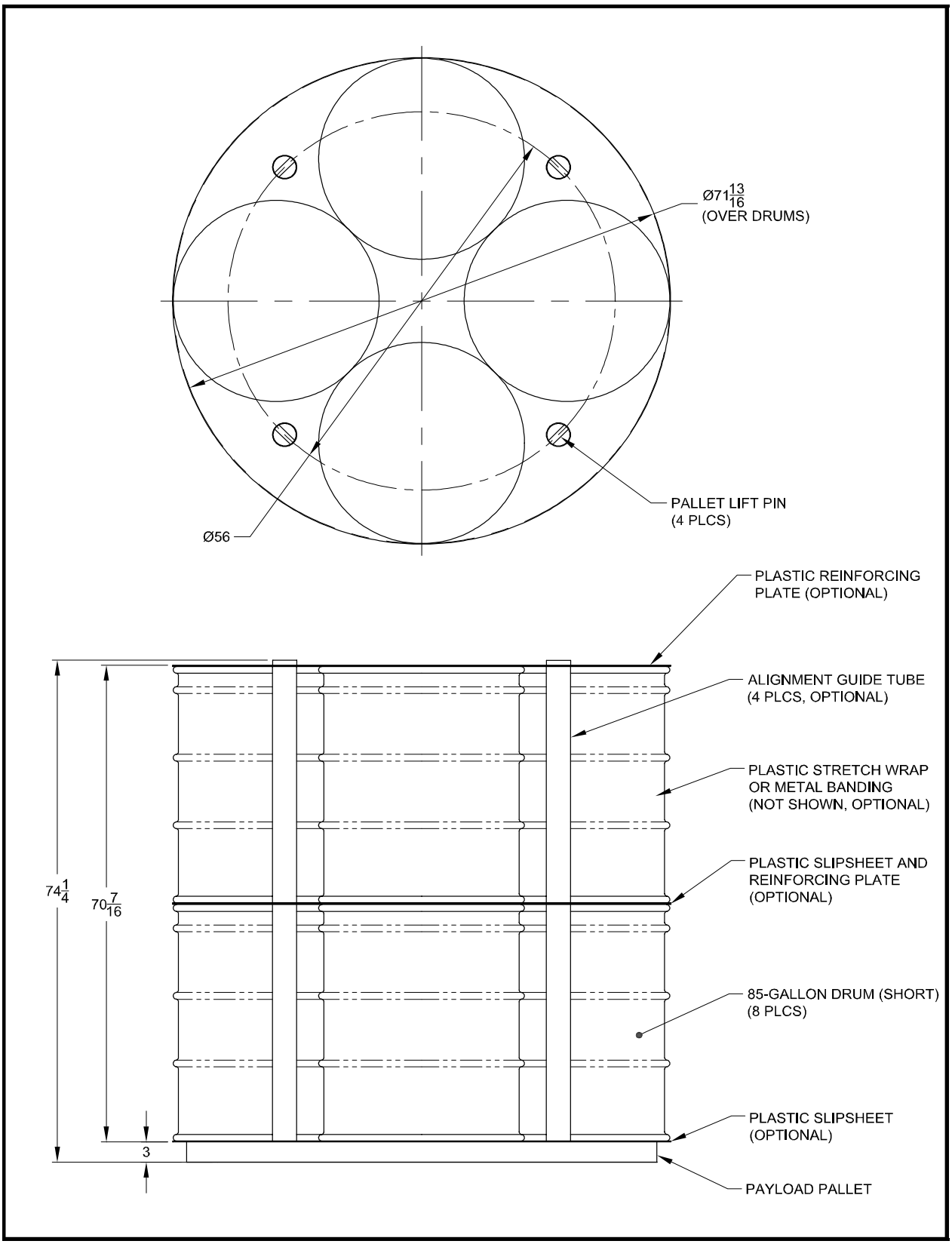

Figure 2.9-10 – TRUPACT-II: Eight 85-Gallon Drum (Short) Payload

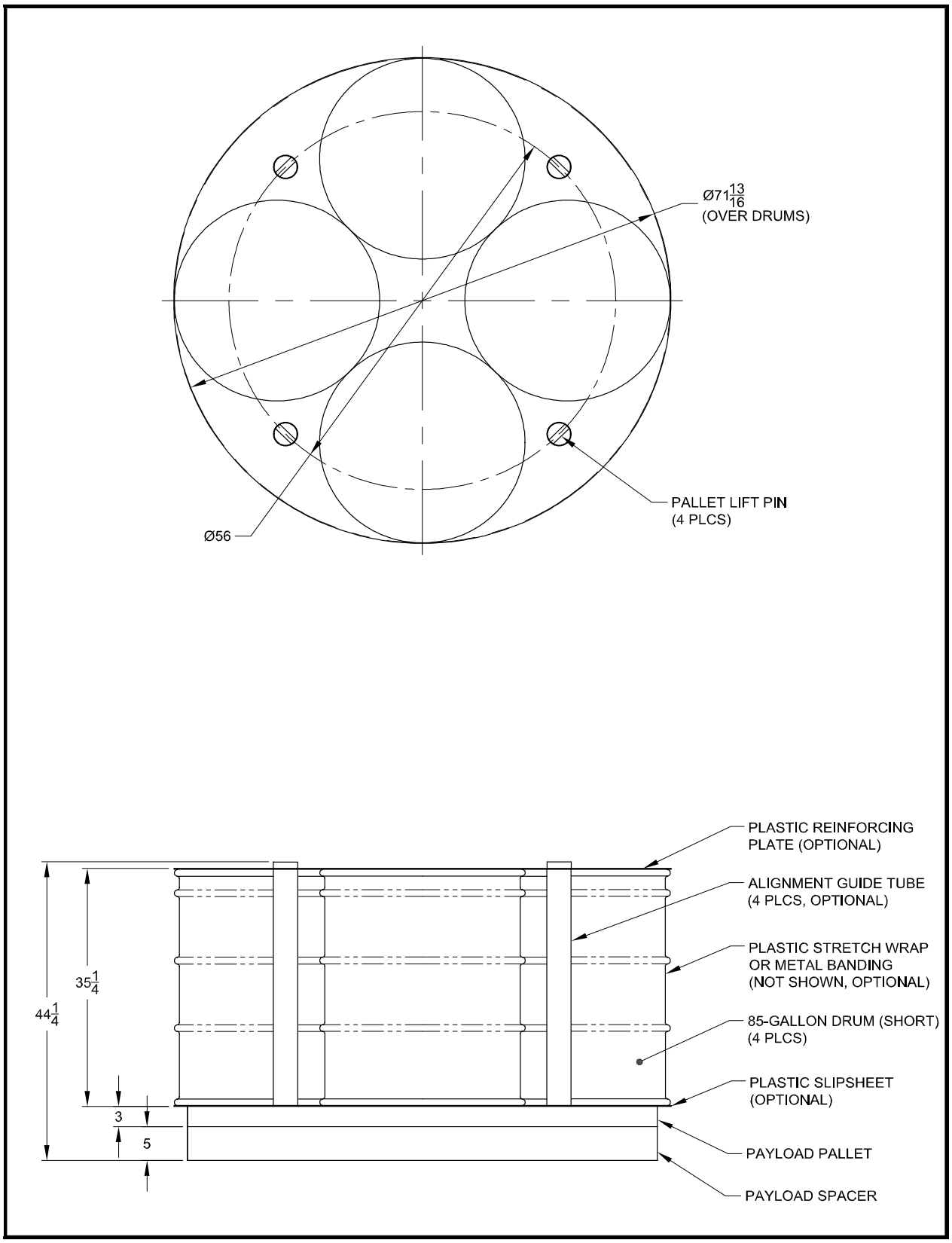

Figure 2.9-11 – HalfPACT: Four 85-Gallon Drum (Short) Payload

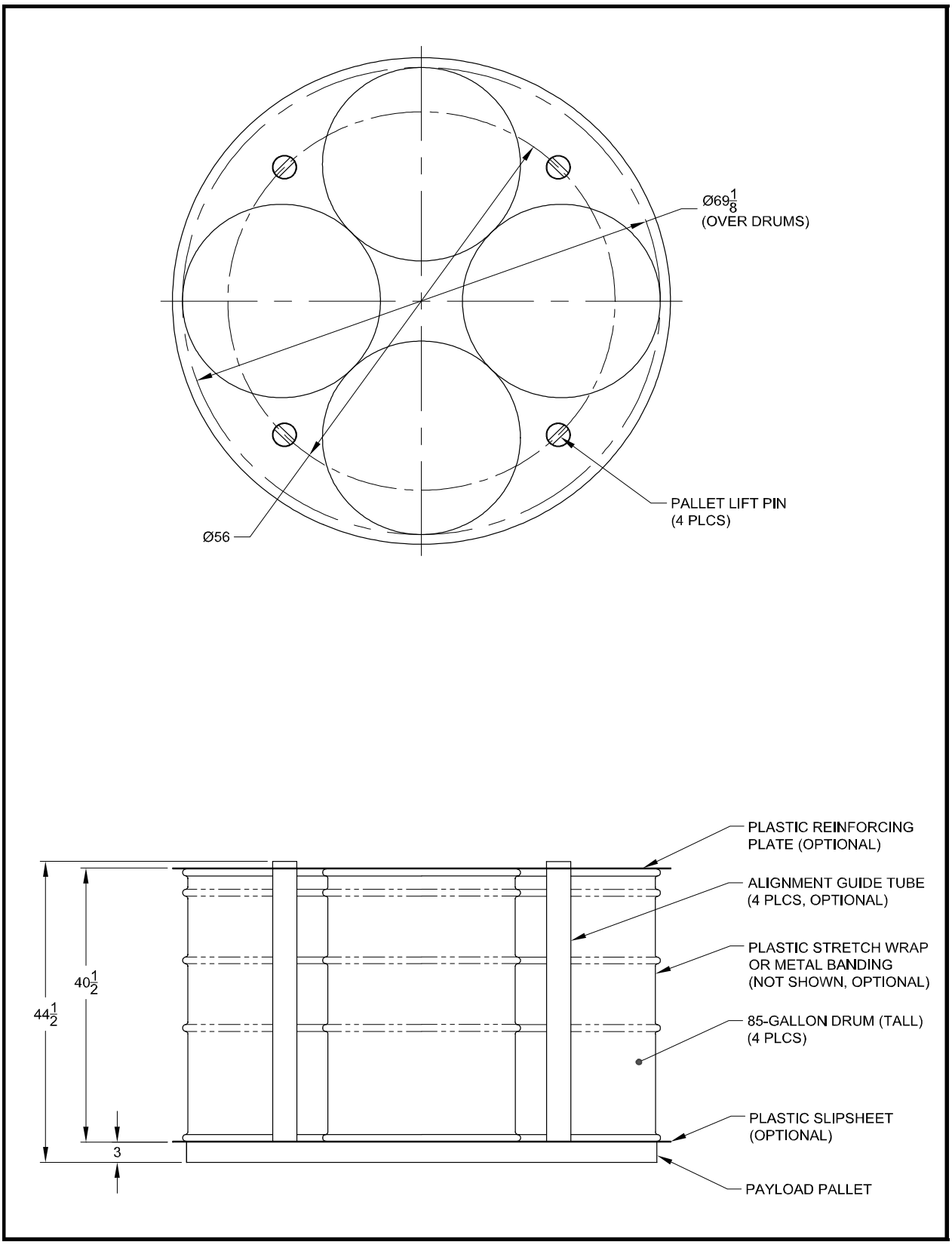

Figure 2.9-12 – HalfPACT: Four 85-Gallon Drum (Tall) Payload

2.9.7 100-Gallon Drum

The 100-gallon drum is authorized for transport within the TRUPACT-II and the HalfPACT (Figure 2.9-13). The TRUPACT-II will accommodate six 100-gallon drums (Figure 2.9-14), and the HalfPACT will accommodate three 100-gallon drums (Figure 2.9-15). The approximate dimensions of the 100-gallon drum are given in Table 2.9-26.

Table 2.9-26 – 100-Gallon Drum Dimensions

Dimension	Approximate Measurement (inches)	
	Inside Dimension	Outside Dimension
Height	33	35
Diameter	30	32

The 100-gallon drum body, lid, and lid ring are constructed of steel. A gasket, of tubular or foam styrene-butadiene, neoprene rubber, or equivalent, is required for outer drum lid closure. The drum must be vented as specified in Section 2.5. An optional, rigid, polyethylene liner and lid may be used inside the drum. If a lid is used with the liner, the liner lid must contain a 0.3-in. minimum diameter hole, or a filter with a hydrogen release rate equivalent to or greater than a 0.3-in. minimum diameter hole. Otherwise, the liner must be treated as any other confinement layer with the associated resistance of the liner hole diameter or filter calculated in accordance with Appendix 2.2 of the CH-TRU Payload Appendices.[1] An optional steel inner lid with an optional gasket may be used inside the drum (i.e., a double-lid drum). A double-lid drum with a filtered inner lid will be considered the same as a drum with a filtered inner confinement layer. Table 2.9-27 presents the 100-gallon drum construction materials. Table 2.9-28 specifies the weights associated with the 100-gallon drum that are applicable to shipment within the TRUPACT-II and HalfPACT.

Table 2.9-27 – 100-Gallon Drum Materials of Construction

100-Gallon Drum Component	Material
Body, lid, and lid ring	Steel
Rigid liner and liner lid (optional)	Polyethylene
Inner lid (optional)	Steel
Gasket	Type I - Tubular styrene-butadiene, or equivalent Type II - Foam styrene-butadiene, or equivalent Type III - Neoprene rubber, or equivalent

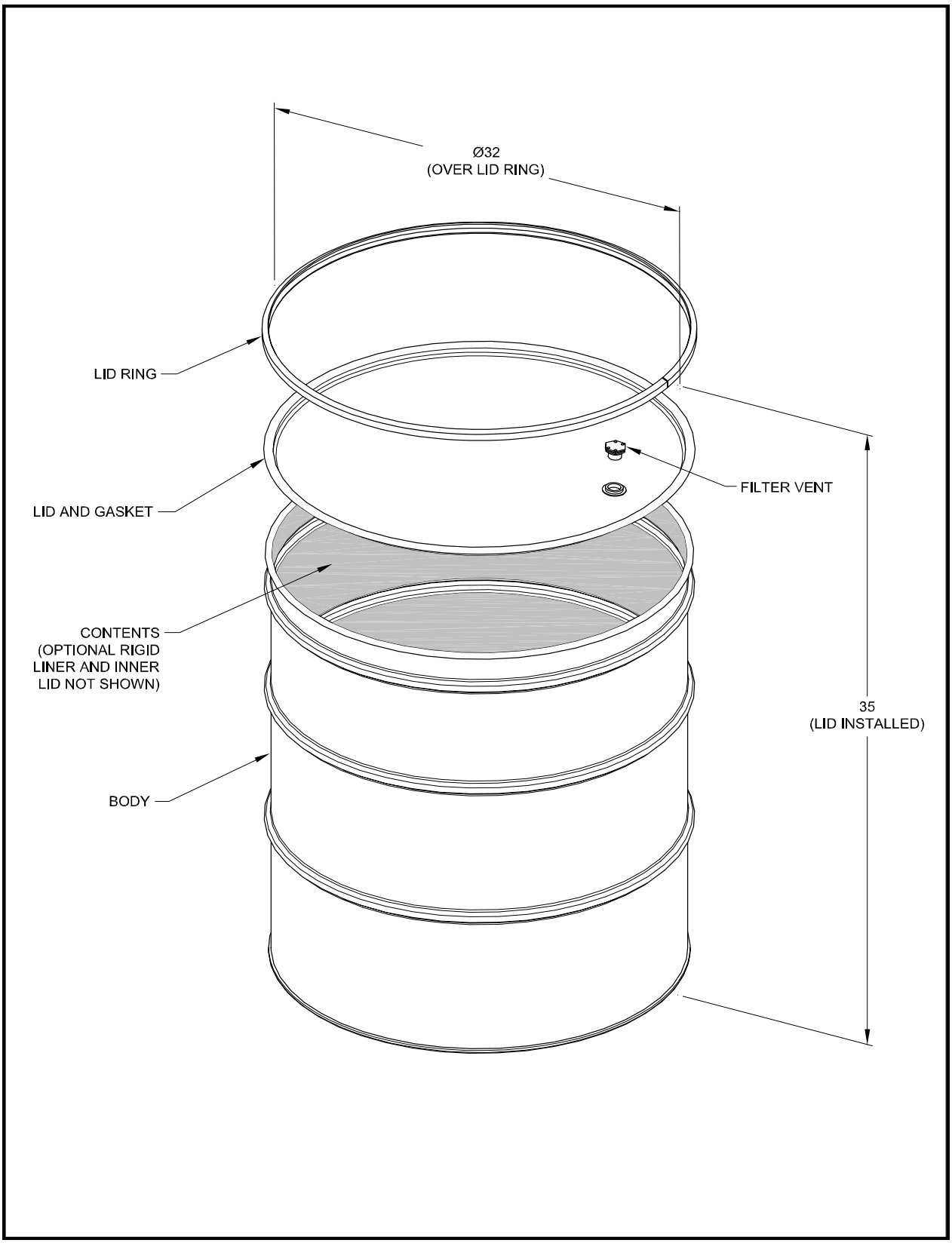

Figure 2.9-13 – 100-Gallon Drum

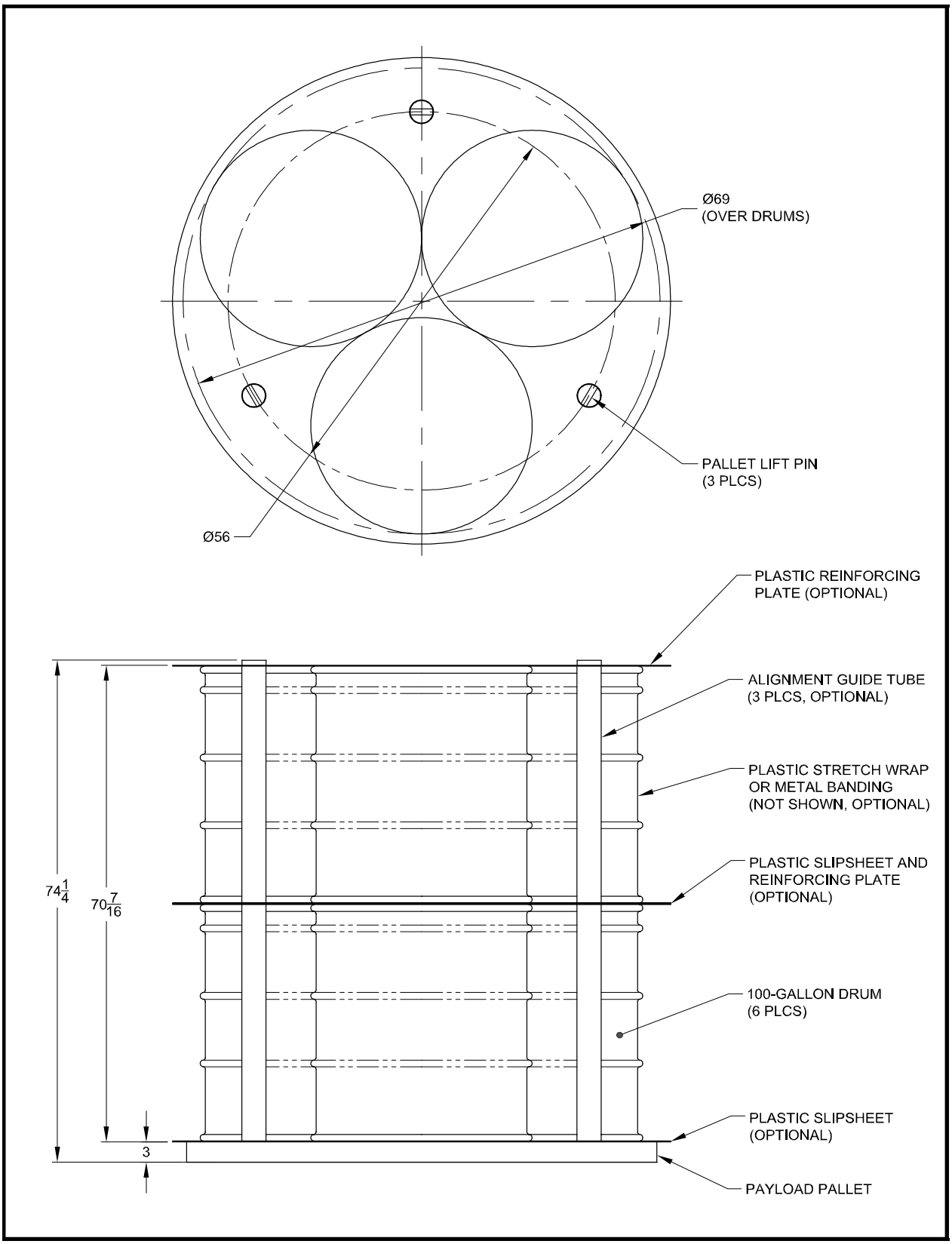

Figure 2.9-14 – TRUPACT-II: Six 100-Gallon Drum Payload

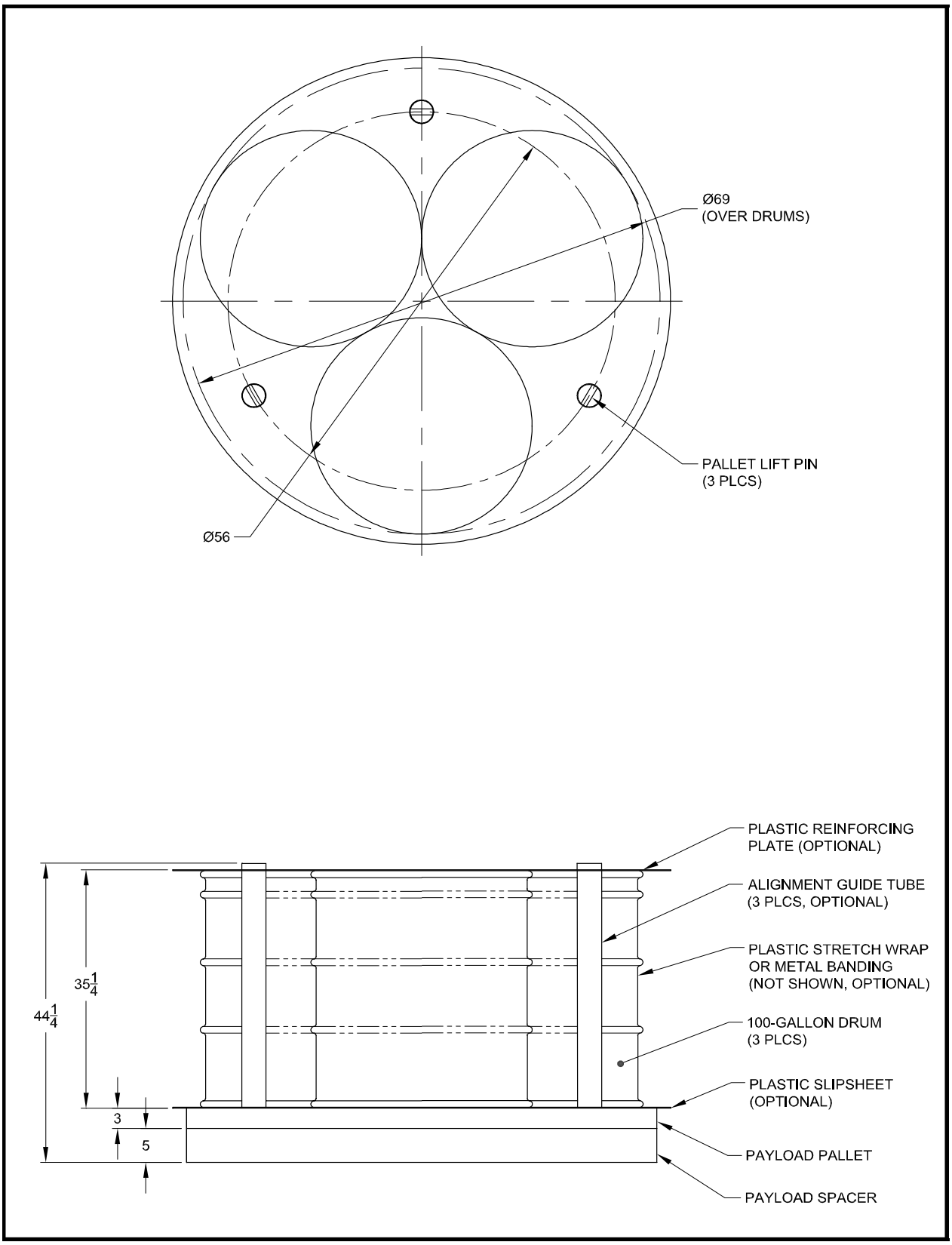

Figure 2.9-15 – HalfPACT: Three 100-Gallon Drum Payload

Table 2.9-28 – 100-Gallon Drum Weights

Component	Weight (pounds)	
	Approximate Empty	Maximum Gross
100-gallon drum	95	1,000

CH-TRU waste may be directly loaded into a 100-gallon drum. Empty 100-gallon drums used as dunnage to complete a payload must also meet the specifications presented in this section with the exception that dunnage containers shall have at least one open vent port (i.e., not filtered or plugged). Table 2.9-29 identifies material content forms authorized for transport within a 100-gallon drum. For all material content forms, if the waste consists of compacted 55-gallon drums, the drums shall allow for hydrogen gas release through puncture holes in the sides of the 55-gallon drum corresponding to the drum headspace and/or through obvious failures in drum integrity due to the compaction process (breach of drum). For material content Form Number 4 (see Table 2.9-29), if grout is used to encapsulate the waste, the grout formulation (e.g., use of gas-permeable grout) and/or application (e.g., grouting around a pipe used as a gas release pathway) shall allow for hydrogen gas release through or around the grout to prevent accumulation of hydrogen inside the encapsulated waste.

Table 2.9-29 – 100-Gallon Drum: Material Content Forms Authorized for Transport

Form Number	Description
1	Direct load: Solids, any particle size (e.g., fine powder or inorganic particulates)
2	Direct load: Solids, large particle size (e.g., sand, concrete, or debris)
3	Direct load: Solids, large objects (e.g., metal cans containing waste)
4	Direct load: Encapsulated solids (e.g., solid particles or objects surrounded by a layer of cementitious grout or similar encapsulant)

2.9.8 Standard Waste Box

The SWB is designed for efficient loading of the ICV in the TRUPACT-II and the HalfPACT (Figure 2.9-16). The TRUPACT-II will accommodate two SWBs (Figure 2.9-17), and the HalfPACT will accommodate one SWB (Figure 2.9-18). The approximate dimensions of the SWB are given in Table 2.9-30.

Table 2.9-30 – SWB Dimensions

Dimension	Approximate Measurement (inches)	
	Inside	Outside
Height	36 9/16	36 7/8
Length	68 3/4	71
Width	52	54 1/2

The SWB is constructed of steel. The SWB is closed by a neoprene or equivalent gasket and steel screws. The SWB contains four filter ports. The SWB must be vented as specified in Section 2.5. Ports without filters must be plugged during transport. Table 2.9-31 presents the SWB construction materials. Table 2.9-32 specifies the weights associated with the SWB that are applicable to shipment within the TRUPACT-II and the HalfPACT.

Table 2.9-31 – SWB Materials of Construction

SWB Component	Material
Body panels (lid, bottom, sides, ends)	Steel
Lift attachments	Steel plate
Upper perimeter tube assembly	Steel tube
Offset tubes	Steel tube
Lid perimeter reinforcement	Steel plate
Gasket	Neoprene or equivalent
Screws	Steel
Filter ports	Steel

CH-TRU waste may be directly loaded into an SWB or may be loaded into up to four 55-gallon drums or one bin, and overpacked in an SWB. The latter configuration constitutes a bin overpack. An empty SWB used as dunnage to complete a TRUPACT-II payload of two SWBs must also meet the specifications presented in this section with the exception that dunnage containers shall have at least one open vent port (i.e., not filtered or plugged). Table 2.9-33 identifies material content forms authorized for transport within an SWB.

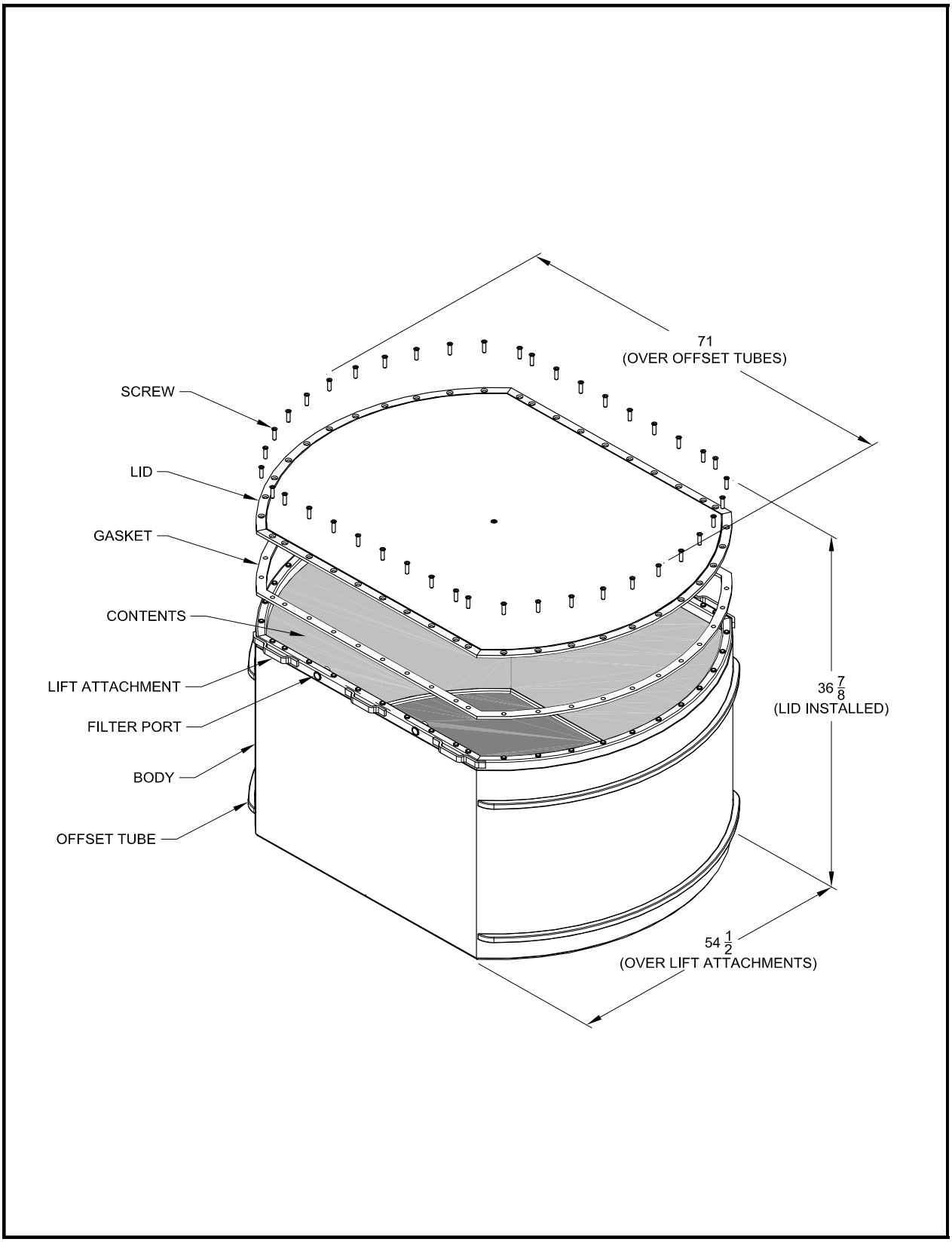

Figure 2.9-16 – Standard Waste Box

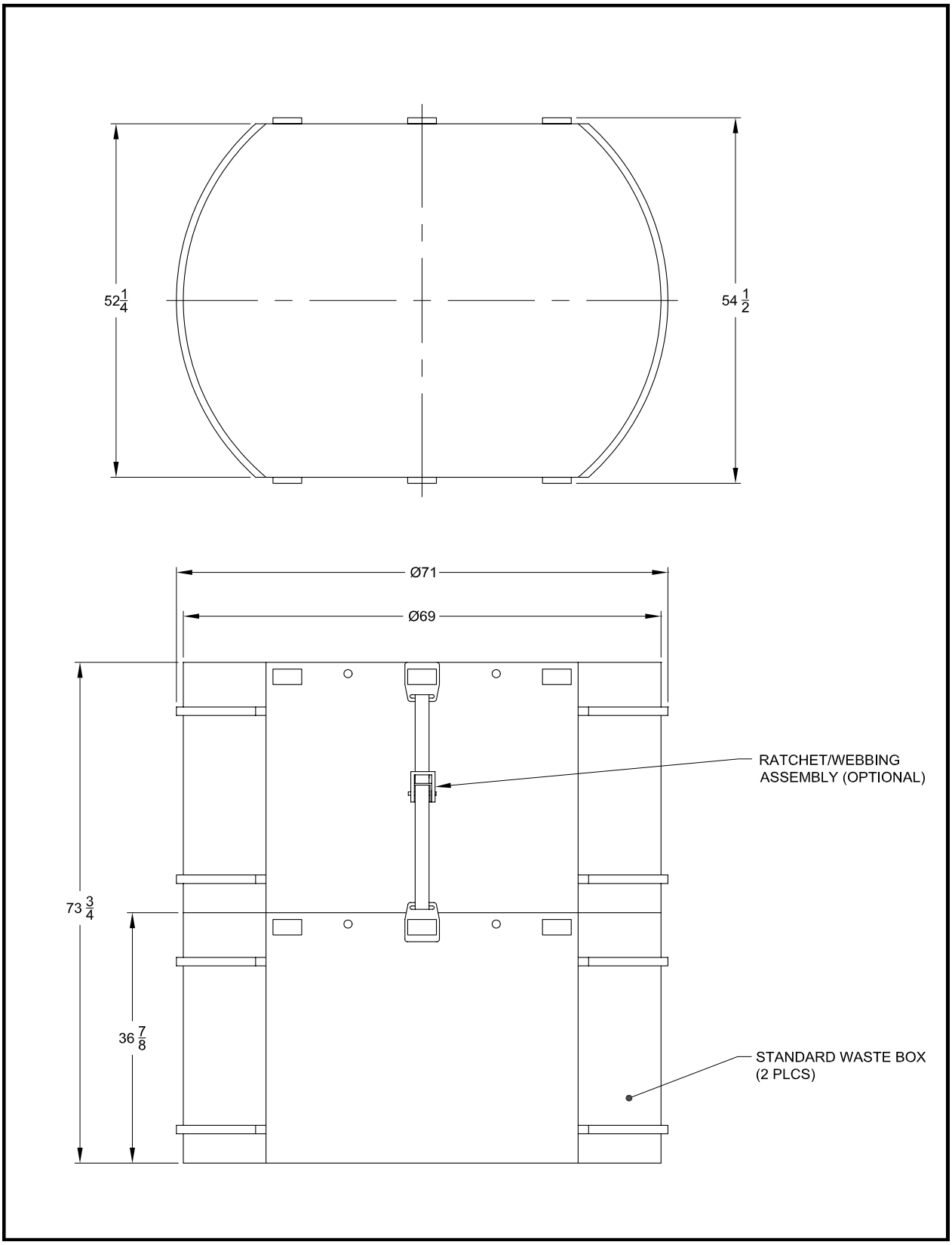

Figure 2.9-17 – TRUPACT-II: Two Standard Waste Box Payload

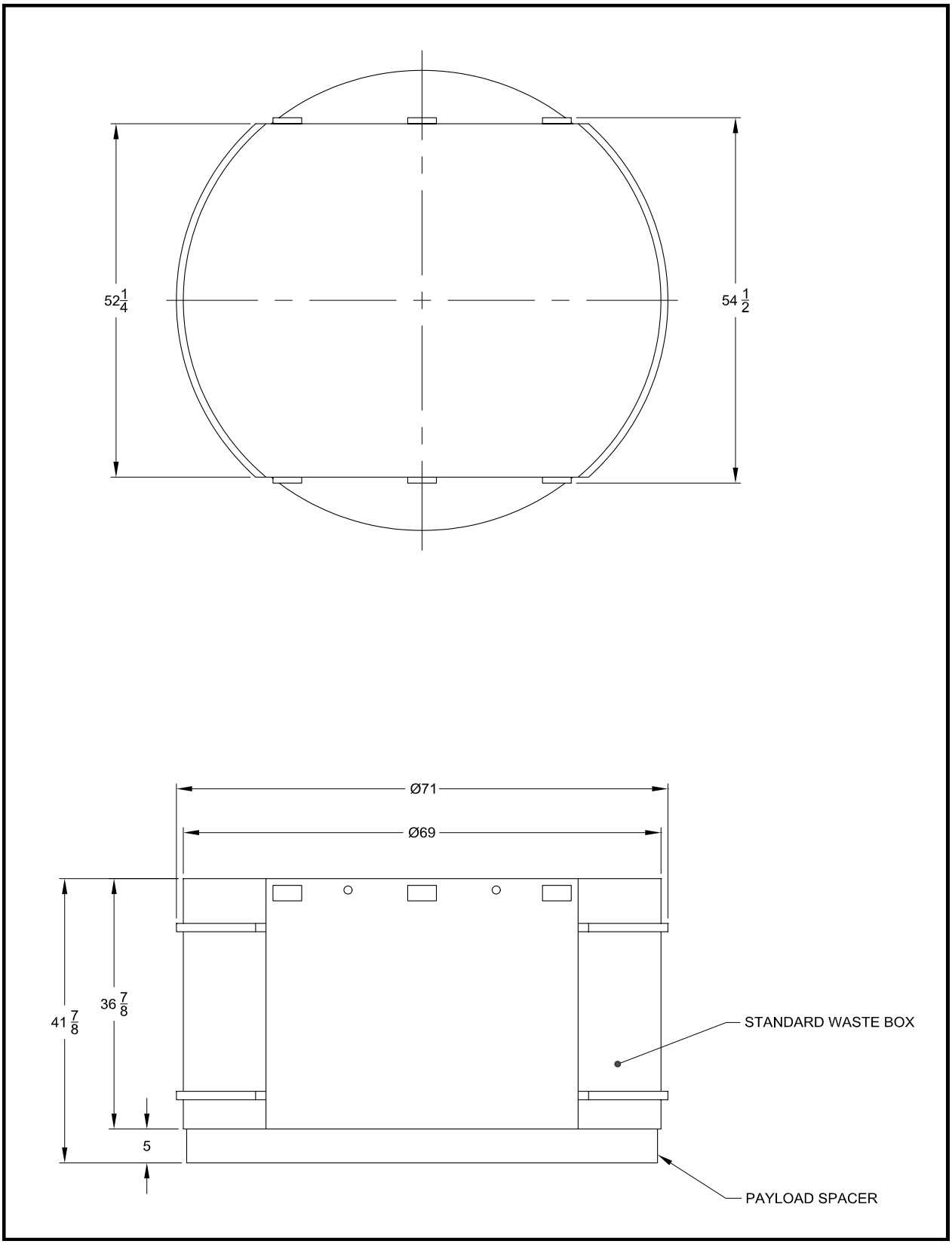

Figure 2.9-18 – HalfPACT: One Standard Waste Box Payload

Table 2.9-32 – SWB Weights

Component	Weight (pounds)	
	Approximate Empty	Maximum Gross
SWB	640	4,000

Table 2.9-33 – SWB: Material Content Forms Authorized for Transport

Form Number	Description
1	Direct load: Solids, any particle size (e.g., fine powder or inorganic particulates)
2	Direct load: Solids, large particle size only (e.g., sand, concrete, or debris)
3	Direct load: Solids, large objects (e.g., metal cans containing waste)
4	Direct load: Large, bulky dense objects with sharp and obtrusive members or components with dispersible Form 1 or Form 2 (e.g., steel plate, electric motors, steel pipe, or concrete blocks)①

Note:

① Blocked, braced, or suitably packaged as necessary to provide puncture protection for the SWB.

2.9.9 Ten-Drum Overpack

The TDOP is designed for efficient loading in the ICV of the TRUPACT-II (Figure 2.9-19). The TRUPACT-II will accommodate one TDOP (Figure 2.9-20). The approximate dimensions of the TDOP are given in Table 2.9-34.

Table 2.9-34 – TDOP Dimensions

Dimension	Approximate Measurement (inches)	
	Inside	Outside
Height	72⅝	73⅛
Diameter	68¾	71¼

The TDOP is constructed of steel. The TDOP is closed by a neoprene or equivalent gasket and steel screws. The TDOP contains ten filter ports. The TDOP must be vented as specified in Section 2.5. Ports without filters must be plugged during transport. Table 2.9-35 presents the TDOP construction materials. Table 2.9-36 specifies the weights associated with the TDOP that are applicable to shipment within the TRUPACT-II.

Table 2.9-35 – TDOP Materials of Construction

TDOP Component	Material
Body, lid, and bottom	Steel
Lift attachments	Steel
Offset tubes	Steel tubing
Gasket	Neoprene or equivalent
Screws	Steel
Filter ports	Steel

Table 2.9-36 – TDOP Weights

Component	Weight (pounds)	
	Approximate Empty	Maximum Gross
TDOP	1,700	6,700

CH-TRU waste may be directly loaded into a TDOP, or may be loaded into up to ten 55-gallon drums, up to six 85-gallon drums, or an SWB, and overpacked in a TDOP. Table 2.9-37 identifies material content forms authorized for transport within a TDOP.

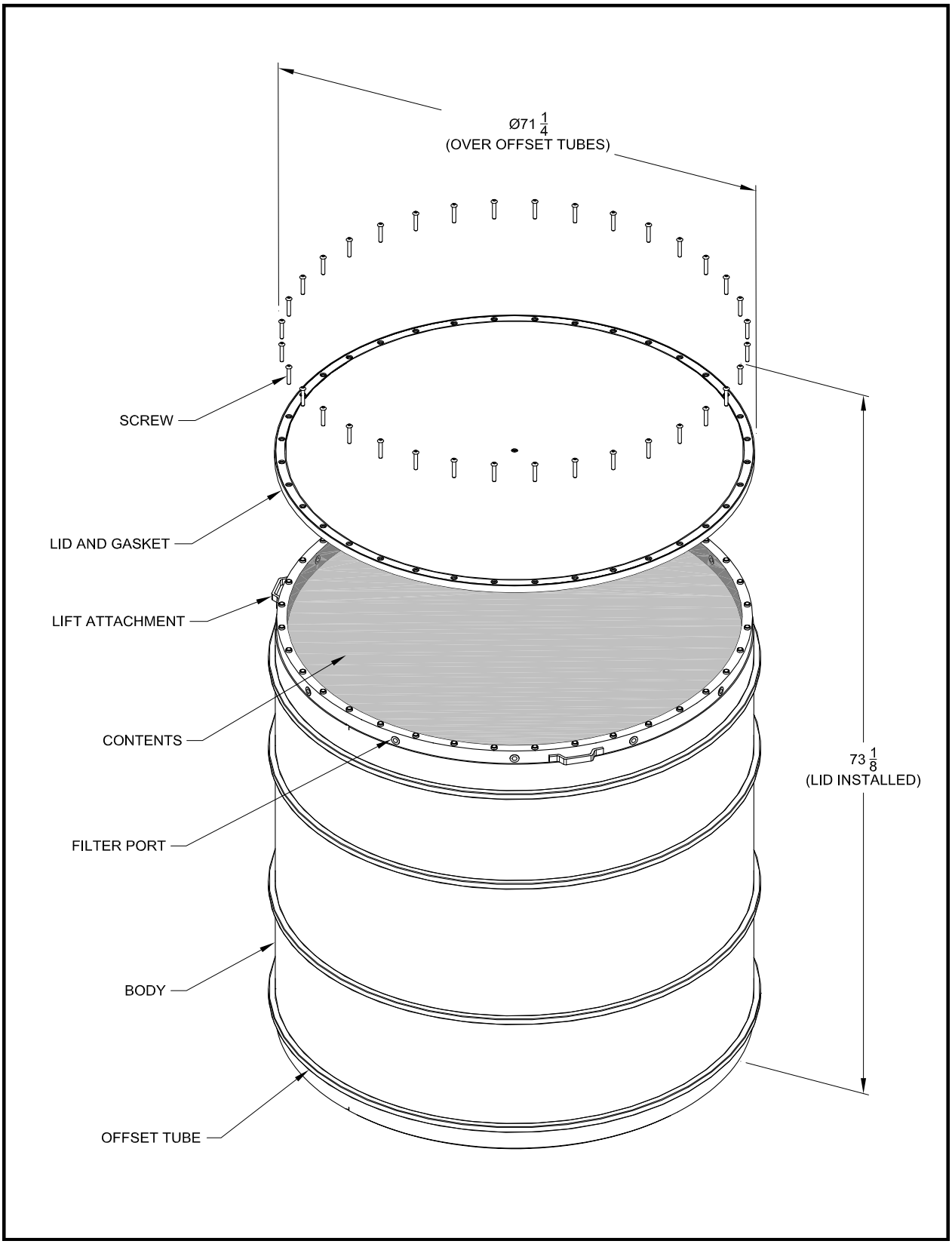

Figure 2.9-19 – Ten-Drum Overpack

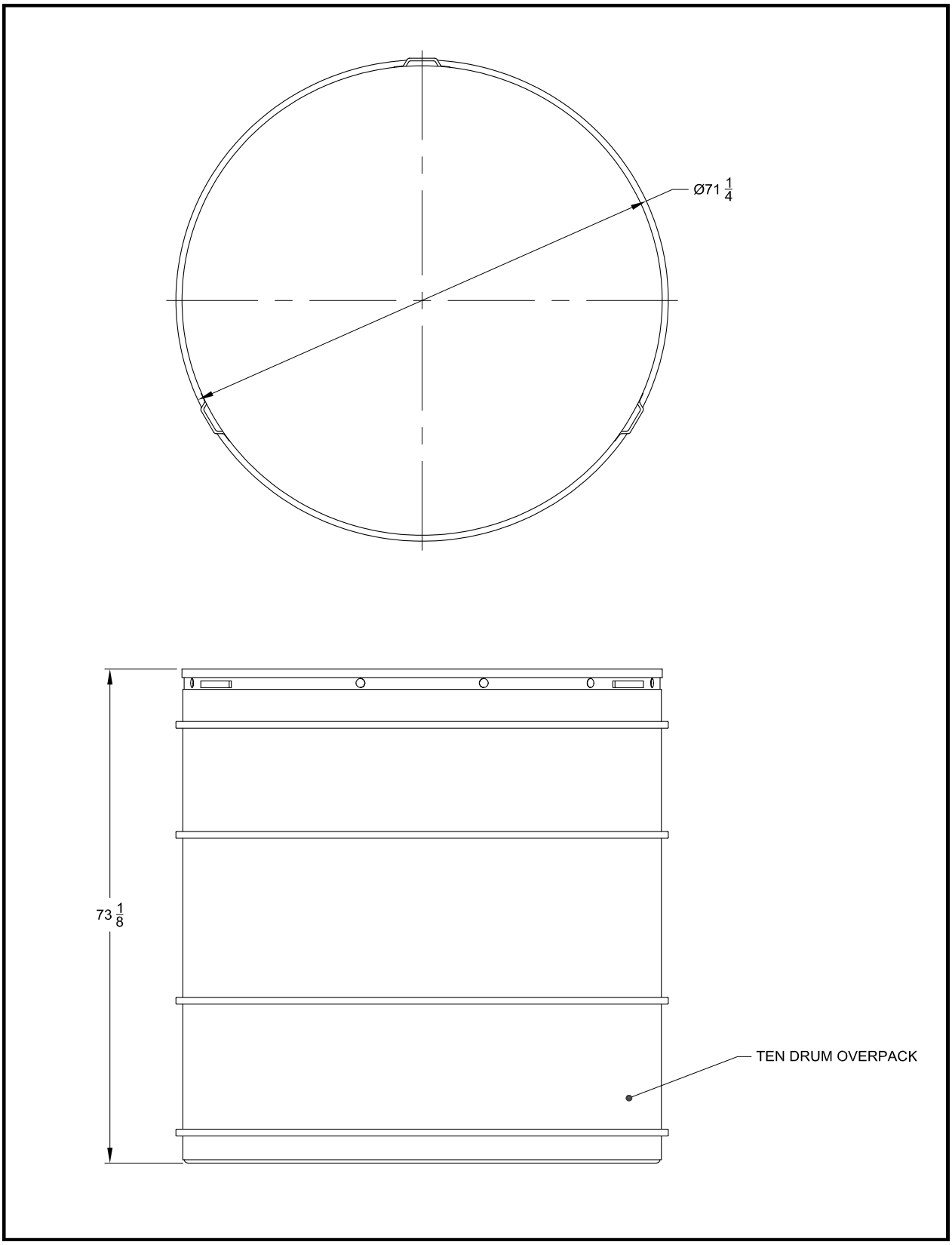

Figure 2.9-20 – TRUPACT-II: One Ten-Drum Overpack Payload

Table 2.9-37 – TDOP: Material Content Forms Authorized for Transport

Form Number	Description
1	Direct load: Solids, any particle size (e.g., fine powder or inorganic particulates)
2	Direct load: Solids, large particle size only (e.g., sand, concrete, or debris)
3	Direct load: Solids, large objects (e.g., metal cans containing waste)
4	Direct load: Large, bulky dense objects with sharp and obtrusive members or components with dispersible Form 1 or Form 2 (e.g., steel plate, electric motors, steel pipe, or concrete blocks)①

Note:

① Blocked, braced, or suitably packaged as necessary to provide puncture protection for the TDOP.

This page intentionally left blank.

3.0 NUCLEAR PROPERTIES REQUIREMENTS

The nuclear properties requirements outlined in this section require a knowledge of isotopic composition and quantity of fissile material. The four major product material isotopic compositions are:

1. Weapons-grade plutonium (Pu) (primarily Pu-239)
2. Fuel-grade plutonium (primarily Pu-239)
3. Heat-source plutonium (primarily Pu-238)
4. Other TRU isotopes.

Site process areas usually only handle product materials of specific isotopic composition (e.g., weapons-grade plutonium has the following composition: 93.83% Pu-239, 5.82% Pu-240, 0.34% Pu-241, 0.02% Pu-242, 0.01% Pu-238). Therefore, the isotopic composition in the waste from specific process areas remains constant since product isotopic composition is closely controlled to meet production isotopic specification requirements.

3.1 Nuclear Criticality

3.1.1 Requirements

A payload container shall be acceptable for transport only if the Pu-239 fissile gram equivalent (FGE) plus two times the measurement error (i.e., two standard deviations) is less than or equal to the following limits:

Drums

- 200 grams for a 55-, 85-, or 100-gallon drum, except for drums containing greater than 1% by weight beryllium (Be) or beryllium oxide (BeO)
- 100 grams for a 55-, 85-, or 100-gallon drum containing greater than 1% by weight Be or BeO
- 55-, 85-, or 100-gallon drums containing greater than 1% by weight Be or BeO and machine-compacted waste are not shippable

SWBs and TDOPs

- 325 grams for an SWB or TDOP, except for SWBs or TDOPs containing greater than 1% by weight Be or BeO or machine-compacted waste
- 100 grams for an SWB or TDOP containing greater than 1% by weight Be or BeO
- 250 grams for an SWB or TDOP containing machine-compacted waste
- SWBs or TDOPs containing greater than 1% by weight Be or BeO and machine-compacted waste are not shippable

Pipe Overpacks

- 200 grams for a standard pipe overpack, S100 pipe overpack, S200 pipe overpack, or S300 pipe overpack. Pipe overpacks containing machine-compacted waste are not shippable.

Note: If a payload container will be overpacked, FGE limits apply only to the outermost payload container of the overpacked configuration.

A TRUPACT-II or HalfPACT shall be acceptable for transport only if the Pu-239 FGE plus two times the measurement error (i.e., two standard deviations) is less than or equal to the following limits:

No Credit for Pu-240 Poisoning

Drums

- 325 grams for a payload of 55-, 85-, or 100-gallon drums, except for payloads containing greater than 1% by weight Be or BeO. If a 55-, 85-, or 100-gallon drum contains machine-compacted waste in the form of "puck" drums, one of the following conditions must be met:
  - The packing fraction of puck drum contents shall not be greater than 70%, the minimum combined thickness of steel separating the fissile masses in two axially adjacent overpack drums shall be 0.12 inch, and, for TRUPACT-II payloads, the payload assembly shall utilize a polyethylene slipsheet and reinforcing plate, each with a nominal thickness of 0.15 in., that axially separate the top and bottom tier of payload containers, or
  - One compacted puck drum spacer shall be used in the bottom of each drum packaging the puck drums as per the specifications in Appendix 1.3.1 of the TRUPACT-II Safety Analysis Report (SAR)[1] and Appendix 1.3.1 of the HalfPACT SAR[2] and, for TRUPACT-II payloads, the payload assembly shall utilize a polyethylene slipsheet and reinforcing plate, each with a nominal thickness of 0.15 in., that axially separate the top and bottom tier of payload containers.

  Compliance with these conditions shall be documented in site-specific documents.
- 250 grams for a payload of 55-, 85-, or 100-gallon drums containing less than or equal to 1% by weight Be or BeO and machine-compacted waste (i.e., not meeting one of the above conditions)
- 100 grams for a payload of 55-, 85-, or 100-gallon drums containing greater than 1% by weight Be or BeO

[1] U.S. Department of Energy (DOE), *TRUPACT-II Shipping Package Safety Analysis Report*, USNRC Certificate of Compliance 71-9218, U.S. Department of Energy, Carlsbad Area Office, Carlsbad, New Mexico.

[2] U.S. Department of Energy (DOE), *HalfPACT Shipping Package Safety Analysis Report*, USNRC Certificate of Compliance 71-9279, U.S. Department of Energy, Carlsbad Area Office, Carlsbad, New Mexico.

SWBs and TDOPs

- 325 grams for a payload of SWB(s) or a TDOP, except for payloads containing greater than 1% by weight Be or BeO
- 250 grams for a payload of SWB(s) or TDOP containing less than or equal to 1% by weight Be or BeO and machine-compacted waste
- 100 grams for a payload of SWB(s) or a TDOP containing greater than 1% by weight Be or BeO

Pipe Overpacks

- 2,800 grams per TRUPACT-II or 1,400 grams per HalfPACT for a payload of standard pipe overpacks, S100 pipe overpacks, S200 pipe overpacks, or S300 pipe overpacks.

A payload composed of both 55-gallon drums and standard pipe overpack payload containers shall be acceptable for transport only if the Pu-239 FGE plus two times the measurement error (i.e., two standard deviations) is less than or equal to the applicable 55-gallon drum payload limit.

If payload containers with different properties (e.g., machine-compacted and non-machine-compacted waste) are assembled in the same payload, the most-restrictive payload container and payload assembly limits and requirements shall apply to all payload containers.

Table 3.1-1 presents a summary of the FGE limits for payload containers and payloads.

Credit for Pu-240 Poisoning

- For payloads of 55-, 85-, or 100-gallon drums, or SWB(s) without machine-compacted waste containing less than or equal to 1% by weight Be or BeO, the package limits specified in Table 3.1-1 apply. The minimum Pu-240 content for the payload shall be determined after the subtraction of two times the error.

Table 3.1-1 – Summary of FGE Limits

FGE Limits with No Credit for Pu-240 Poisoning				
Contents	**Payload Container**	**Fissile Limit per Payload Container (Pu-239 FGE)①**	**Fissile Limit per TRUPACT-II Package (Pu-239 FGE)**	**Fissile Limit per HalfPACT Package (Pu-239 FGE)**
Not machine compacted with ≤ 1% by weight Be/BeO	Drum	200	325	325
	Pipe Overpack	200	2,800	1,400
	SWB	325	325	325
	TDOP	325	325	NA③
Not machine compacted with > 1% by weight Be/BeO	Drum	100	100	100
	Pipe Overpack	200	2,800	1,400
	SWB	100	100	100
	TDOP	100	100	NA③
Machine compacted with ≤ 1% by weight Be/BeO	Drum	200	250	250
	Pipe Overpack	Unauthorized	Unauthorized	Unauthorized
	SWB	250	250	250
	TDOP	250	250	NA③
Machine compacted with controls② and ≤ 1% by weight Be/BeO	Drum	200	325	325
	Pipe Overpack	Unauthorized	Unauthorized	Unauthorized
	SWB	Unauthorized	Unauthorized	Unauthorized
	TDOP	Unauthorized	Unauthorized	NA③
Machine compacted with > 1% by weight Be/BeO	Drum	Unauthorized	Unauthorized	Unauthorized
	Pipe Overpack	Unauthorized	Unauthorized	Unauthorized
	SWB	Unauthorized	Unauthorized	Unauthorized
	TDOP	Unauthorized	Unauthorized	NA③

FGE Limits with Credit for Pu-240 Poisoning		
Contents	**Minimum Pu-240 Content in Payload (grams)**	**Fissile Material Limit per Package (Pu-239 FGE)**
Not machine compacted with ≤ 1% by weight Be/BeO in drums or SWB(s)	5	340
	15	360
	25	380

Notes:

① The FGE limit given applies to the payload container regardless of Pu-240 content in the package.

② The contents shall be machine-compacted waste in the form of "puck" drums and meeting the conditions specified in Section 3.1.1

③ Not applicable.

3.1.2 Methods of Compliance and Verification

Compliance with the FGE requirements involves the following steps:

- Determination of the isotopic composition
- Determination of the quantity of radionuclides
- Calculation of the FGE and compliance evaluation.

Each of these steps is discussed in detail below.

Isotopic Composition

The isotopic composition of the waste may be determined from direct measurements taken on the product material during the processing or post-process certification at each site, analysis of the waste, or from existing records. The isotopic composition of the waste need not be determined by direct analysis or measurement of the waste unless process information is not available.

Pu-239 FGE for other fissile or fissionable isotopes, including special actinide elements, shall be obtained using the American National Standards Institute (ANSI)/American Nuclear Society (ANS) method ANSI/ANS-8.15[3], or an equivalent method. Table 3.1-2 lists the Pu-239 FGE, as well as the decay heat and specific activity, of many radionuclides.

The following are two examples of analytical methods for determining isotopic composition:

- Mass spectrometry (MS)
- Gamma ray pulse height analysis.

Depending on the mixture of radionuclides present in the waste, one or more methods may be required. These assay methods are described in Appendix 5.2 of the CH-TRU Payload Appendices.[4]

MS is a primary method for determining the radioisotopic composition in product material (e.g., plutonium isotopic composition). The isotope analyses shall be performed in accordance with the following American Society for Testing and Materials (ASTM) MS methods: ASTM C 696, ASTM C 697, and ASTM C 759[5,6,7], or equivalent methods.

---

[3] American National Standards Institute/American Nuclear Society (ANSI/ANS), *Nuclear Criticality Control of Special Actinide Elements*, ANSI/ANS-8.15, American National Standards Institute/American Nuclear Society, Washington, D.C.

[4] U.S. Department of Energy (DOE), *CH-TRU Payload Appendices*, U.S. Department of Energy, Carlsbad Field Office, Carlsbad, New Mexico.

[5] American Society for Testing and Materials (ASTM), *Standard Test Methods for Chemical, Mass Spectrometric, and Spectrochemical Analysis of Nuclear-Grade Uranium Dioxide Powders and Pellets*, ASTM C 696, American Society for Testing and Materials, Washington, D.C.

[6] American Society for Testing and Materials (ASTM), *Standard Test Methods for Chemical, Mass Spectrometric, and Spectrochemical Analysis of Nuclear-Grade Plutonium Dioxide Powders and Pellets*, ASTM C 697, American Society for Testing and Materials, Washington, D.C.

[7] American Society for Testing and Materials (ASTM), *Standard Test Methods for Chemical Mass Spectrometric, and Spectrochemical, Nuclear, and Radiochemical Analysis of Nuclear-Grade Plutonium Nitrate Solutions*, ASTM C 759, American Society for Testing and Materials, Washington, D.C.

Gamma ray pulse height analysis or MS is used to determine the isotopic composition for gamma-emitting radionuclides. Gamma ray pulse height analysis shall be performed in accordance with ASTM C 1030[8], or an equivalent method.

Quantity of Radionuclides

The quantity of the radionuclides in each payload container shall be estimated by either a direct measurement or records of the individual payload container, a summation of assay results from individual packages in a payload container, or a direct measurement on a representative sample of a waste stream (such as solidified inorganics). An assay refers to one of several radiation measurement techniques that determine the quantity of nuclear material in TRU wastes. Assay instruments detect and quantify the primary radiation (alpha, gamma, and/or neutron) emanating from specific radionuclides, or a secondary radiation emitted from neutron interrogation techniques. The measured quantity of radiation is then used to calculate the quantity of other radionuclides and the total quantity of Pu-239 FGE. That calculation requires knowledge of the isotopic composition of the waste. Combinations of gamma spectroscopy and neutron measurements are often needed to calculate the quantity of nonfissile radionuclides.

The following are five examples of assay methods for quantifying radionuclides in TRU waste:

- Passive gamma (hyper-pure germanium, germanium, lithium-drifted germanium, sodium iodide: transmission-corrected and noncorrected)
- Radiochemical assay (alpha and gamma spectroscopy)
- Passive neutron coincidence counting assay
- Passive-active neutron assay
- Calorimetry.

These assay methods are described in Appendix 5.2 of the CH-TRU Payload Appendices.[4]

General assay requirements that apply to all sites are as follows:

- Each site shall select and use the assay method(s) of its choice, provided the method(s) is/are approved by the DOE-CBFO under the programmatic or waste-specific data TRAMPAC (see Section 1.4) and the prescribed controls are implemented.
- The site's waste content code descriptions shall list the specific assay method(s) and its/their application(s).
- Site/equipment-specific operating and QA procedures or the waste-specific data package shall describe the assay method(s) and the controls imposed on the assay operations. The controls include performing calibration and background measurements. The calibration and background measurements shall fall within the stated acceptable ranges before assays are performed.
- Site/equipment-specific QA plans and procedures or the QA associated with the waste-specific data package shall include oversight of assay methods and controls.

[8] American Society for Testing and Materials (ASTM), *Standard Test Method for Determination of Plutonium Isotopic Composition by Gamma-Ray Spectrometry*, ASTM C 1030, American Society for Testing and Materials, Washington, D.C.

- Each site shall provide a specialized training program for assay operators.

Calculation of the FGE and Compliance Evaluation

The FGE of each payload container shall be calculated from the isotopic composition and quantity of radionuclides. The FGE value plus two times the measurement error (i.e., two standard deviations) shall be less than or equal to the applicable limit for each payload container. The Pu-239 FGE of each payload container shall be recorded in the PCTCD and OPCTCD, as applicable (see Section 6.2.1).

The total Pu-239 FGE for a payload shall be calculated and recorded in the PATCD (Section 6.2.2). The total Pu-239 FGE error is the square root of the sum of the squares of twice the individual Pu-239 FGE errors. This error shall be added to the FGE of the payload and compared to the limit.

This page intentionally left blank.

Table 3.1-2 – Pu-239 Fissile Gram Equivalent, Decay Heat, and Specific Activity of Many Radionuclides

Nuclide		Atomic Number	Pu-239 FGE①	Decay Heat② (W/g)	Specific Activity③ (Ci/g)
H	3	1	0.00E+00	3.28E-01	9.76E+03
C	14	6	0.00E+00	1.32E-03	4.51E+00
Na	22	11	0.00E+00	8.94E+01	6.32E+03
P	32	15	0.00E+00	1.19E+03	2.89E+05
Cr	51	24	0.00E+00	1.95E+01	9.24E+04
Mn	54	25	0.00E+00	3.88E+01	7.82E+03
Fe	55	26	0.00E+00	8.49E-02	2.44E+03
Fe	59	26	0.00E+00	3.80E+02	4.92E+04
Co	57	27	0.00E+00	7.29E+00	8.55E+03
Co	58	27	0.00E+00	1.91E+02	3.18E+04
Co	60	27	0.00E+00	1.76E+01	1.14E+03
Ni	59	28	0.00E+00	3.22E-06	8.08E-02
Ni	63	28	0.00E+00	6.05E-03	5.98E+01
Cu	64	29	0.00E+00	7.21E+03	3.89E+06
Zn	65	30	0.00E+00	2.89E+01	8.24E+03
As	73	33	0.00E+00	1.02E+01	2.25E+04
Se	79	34	0.00E+00	2.18E-05	6.97E-02
Kr	85	36	0.00E+00	5.94E-01	3.97E+02
Rb	86	37	0.00E+00	3.71E+02	8.22E+04
Sr	89	38	0.00E+00	1.01E+02	2.94E+04
Sr	90	38	0.00E+00	1.60E-01	1.38E+02
Y	88	39	0.00E+00	2.24E+02	1.41E+04
Y	90	39	0.00E+00	3.01E+03	5.44E+05
Y	90m	39	0.00E+00	4.40E+04	1.09E+07
Y	91	39	0.00E+00	8.83E+01	2.45E+04
Zr	88	40	0.00E+00	4.46E+01	1.80E+04
Zr	90	40	0.00E+00	NA④	NA④
Zr	90m	40	0.00E+00	2.13E+09	1.55E+11
Zr	93	40	0.00E+00	7.29E-07	2.51E-03
Zr	95	40	0.00E+00	1.10E+02	2.17E+04
Nb	95	41	0.00E+00	1.87E+02	3.91E+04
Nb	95m	41	0.00E+00	6.11E+02	3.81E+05

Nuclide		Atomic Number	Pu-239 FGE①	Decay Heat② (W/g)	Specific Activity③ (Ci/g)
Tc	99	43	0.00E+00	8.49E-06	1.70E-02
Tc	99m	43	0.00E+00	4.31E+03	5.27E+06
Ru	103	44	0.00E+00	1.05E+02	3.26E+04
Ru	106	44	0.00E+00	2.00E-01	3.38E+03
Rh	103m	45	0.00E+00	7.55E+03	3.25E+07
Rh	106	45	0.00E+00	6.74E+07	3.56E+09
Pd	107	46	0.00E+00	2.83E-08	5.14E-04
Ag	109m	47	0.00E+00	1.32E+06	2.61E+09
Ag	110	47	0.00E+00	3.01E+07	4.17E+09
Ag	110m	47	0.00E+00	7.99E+01	4.80E+03
Cd	109	48	0.00E+00	1.68E+00	2.61E+03
Cd	113m	48	0.00E+00	2.34E-01	2.17E+02
Sn	119m	50	0.00E+00	2.38E+00	4.48E+03
Sn	121m	50	0.00E+00	1.44E-02	5.91E+01
Sn	123	50	0.00E+00	2.58E+01	8.22E+03
Sn	126	50	0.00E+00	3.06E-05	2.84E-02
Sb	125	51	0.00E+00	3.27E+00	1.04E+03
Sb	126	51	0.00E+00	1.54E+03	8.36E+04
Sb	126m	51	0.00E+00	1.01E+06	7.85E+07
Te	123	52	0.00E+00	6.50E-17	4.85E-12
Te	123m	52	0.00E+00	1.31E+01	8.87E+03
Te	125m	52	0.00E+00	1.57E+01	1.80E+04
Te	127	52	0.00E+00	3.59E+03	2.64E+06
Te	127m	52	0.00E+00	5.21E+00	9.43E+03
I	125	53	0.00E+00	6.38E+00	1.76E+04
I	129	53	0.00E+00	9.34E-08	1.79E-04
I	131	53	0.00E+00	4.23E+02	1.25E+05
Cs	134	55	0.00E+00	1.33E+01	1.31E+03
Cs	135	55	0.00E+00	3.82E-07	1.15E-03
Cs	137	55	0.00E+00	9.74E-02	8.80E+01
Ba	133	56	0.00E+00	6.82E-01	2.53E+02
Ba	137	56	0.00E+00	NA④	NA④
Ba	137m	56	0.00E+00	2.12E+06	5.38E+08
Ce	141	58	0.00E+00	4.19E+01	2.88E+04
Ce	144	58	0.00E+00	2.14E+00	3.22E+03

Nuclide		Atomic Number	Pu-239 FGE①	Decay Heat② (W/g)	Specific Activity③ (Ci/g)
Pr	144	59	0.00E+00	5.54E+05	7.56E+07
Pr	144m	59	0.00E+00	6.22E+04	1.81E+08
Pm	146	61	0.00E+00	2.22E+00	4.43E+02
Pm	147	61	0.00E+00	3.44E-01	9.38E+02
Sm	146	62	0.00E+00	3.47E-07	2.38E-05
Sm	147	62	0.00E+00	3.04E-10	2.30E-08
Sm	151	62	0.00E+00	3.10E-03	2.66E+01
Eu	150	63	0.00E+00	5.95E-01	6.46E+01
Eu	152	63	0.00E+00	1.35E+00	1.78E+02
Eu	154	63	0.00E+00	2.39E+00	2.67E+02
Eu	155	63	0.00E+00	3.42E-01	4.70E+02
Gd	152	64	0.00E+00	2.77E-13	2.18E-11
Gd	153	64	0.00E+00	2.96E+00	3.53E+03
Tm	168	69	0.00E+00	8.39E+01	8.44E+03
Ta	182	73	0.00E+00	5.60E+01	6.31E+03
Au	198	79	0.00E+00	1.51E+03	2.45E+05
Tl	207	81	0.00E+00	5.58E+05	1.90E+08
Tl	208	81	0.00E+00	6.93E+06	2.95E+08
Tl	209	81	0.00E+00	8.58E+06	4.16E+08
Pb	209	82	0.00E+00	5.32E+03	4.54E+06
Pb	210	82	0.00E+00	1.96E-02	7.72E+01
Pb	211	82	0.00E+00	7.61E+04	2.47E+07
Pb	212	82	0.00E+00	2.64E+03	1.39E+06
Pb	214	82	0.00E+00	1.49E+05	3.28E+07
Bi	207	83	0.00E+00	5.34E-01	5.48E+01
Bi	210	83	0.00E+00	2.86E+02	1.24E+05
Bi	211	83	0.00E+00	1.64E+07	4.18E+08
Bi	212	83	0.00E+00	2.42E+05	1.47E+07
Bi	213	83	0.00E+00	7.64E+04	1.93E+07
Bi	214	83	0.00E+00	7.25E+05	4.41E+07
Po	209	84	0.00E+00	4.94E+00	1.68E+01
Po	210	84	0.00E+00	1.45E+02	4.54E+03
Po	211	84	0.00E+00	4.58E+09	1.04E+11
Po	212	84	0.00E+00	9.24E+15	1.77E+17
Po	213	84	0.00E+00	6.26E+14	1.26E+16

Nuclide		Atomic Number	Pu-239 FGE①	Decay Heat② (W/g)	Specific Activity③ (Ci/g)
Po	214	84	0.00E+00	1.46E+13	3.21E+14
Po	215	84	0.00E+00	1.29E+12	2.95E+13
Po	216	84	0.00E+00	1.40E+10	3.48E+11
Po	218	84	0.00E+00	9.90E+06	2.78E+08
At	211	85	0.00E+00	3.05E+04	2.06E+06
At	217	85	0.00E+00	6.74E+10	1.61E+12
Rn	219	86	0.00E+00	5.30E+08	1.30E+10
Rn	220	86	0.00E+00	3.44E+07	9.22E+08
Rn	222	86	0.00E+00	5.01E+03	1.54E+05
Fr	221	87	0.00E+00	6.71E+06	1.77E+08
Fr	223	87	0.00E+00	1.10E+05	3.87E+07
Ra	223	88	0.00E+00	1.83E+03	5.18E+04
Ra	224	88	0.00E+00	5.37E+03	1.59E+05
Ra	225	88	0.00E+00	2.78E+01	3.92E+04
Ra	226	88	0.00E+00	2.88E-02	1.00E+00
Ra	228	88	0.00E+00	2.76E-02	2.76E+02
Ac	225	89	0.00E+00	1.99E+03	5.80E+04
Ac	227	89	0.00E+00	3.68E-02	7.32E+01
Ac	228	89	0.00E+00	1.80E+04	2.24E+06
Th	227	90	0.00E+00	1.11E+03	3.07E+04
Th	228	90	0.00E+00	2.71E+01	8.29E+02
Th	229	90	0.00E+00	6.17E-03	2.13E-01
Th	230	90	0.00E+00	5.75E-04	2.04E-02
Th	231	90	0.00E+00	6.43E+02	5.32E+05
Th	232	90	0.00E+00	2.68E-09	1.11E-07
Th	234	90	0.00E+00	3.45E+00	2.32E+04
Pa	231	91	0.00E+00	1.46E-03	4.78E-02
Pa	233	91	0.00E+00	4.90E+01	2.08E+04
Pa	234	91	0.00E+00	2.40E+04	2.00E+06
Pa	234m	91	0.00E+00	3.40E+06	6.87E+08
U	232	92	0.00E+00	6.93E-01	2.16E+01
U	233	92	9.00E-01	2.84E-04	9.76E-03
U	234	92	0.00E+00	1.82E-04	6.32E-03
U	235	92	6.43E-01	6.04E-08	2.19E-06
U	236	92	0.00E+00	1.78E-06	6.54E-05

Nuclide		Atomic Number	Pu-239 FGE①	Decay Heat② (W/g)	Specific Activity③ (Ci/g)
U	237	92	0.00E+00	1.64E+02	8.25E+04
U	238	92	0.00E+00	8.62E-09	3.40E-07
U	239	92	0.00E+00	1.69E+05	3.35E+07
U	240	92	0.00E+00	1.17E+03	9.26E+05
Np	237	93	1.50E-02	2.09E-05	7.13E-04
Np	238	93	0.00E+00	1.49E+03	2.59E+05
Np	239	93	0.00E+00	5.87E+02	2.32E+05
Np	240	93	0.00E+00	8.52E+04	1.27E+07
Np	240m	93	0.00E+00	9.98E+05	1.08E+08
Pu	236	94	0.00E+00	1.87E+01	5.37E+02
Pu	238	94	1.13E-01	5.73E-01	1.73E+01
Pu	239	94	1.00E+00	1.95E-03	6.29E-02
Pu	240	94	2.25E-02	7.16E-03	2.30E-01
Pu	241	94	2.25E+00	3.31E-03	1.04E+02
Pu	242	94	7.50E-03	1.17E-04	3.97E-03
Pu	243	94	0.00E+00	5.38E+03	2.60E+06
Pu	244	94	0.00E+00	5.22E-07	1.79E-05
Am	241	95	1.87E-02	1.16E-01	3.47E+00
Am	242	95	0.00E+00	9.38E+02	8.08E+05
Am	242m	95	3.46E+01	4.32E-03	9.83E+00
Am	243	95	1.29E-02	6.49E-03	2.02E-01
Am	245	95	0.00E+00	2.12E+04	6.24E+06
Cm	240	96	0.00E+00	7.48E+02	2.01E+04
Cm	242	96	0.00E+00	1.23E+02	3.35E+03
Cm	243	96	5.00E+00	1.90E+00	5.22E+01
Cm	244	96	9.00E-02	2.86E+00	8.18E+01
Cm	245	96	1.50E+01	5.77E-03	1.74E-01
Cm	246	96	0.00E+00	1.02E-02	3.11E-01
Cm	247	96	5.00E-01	2.98E-06	9.38E-05
Cm	248	96	0.00E+00	5.53E-04	4.30E-03
Cm	250	96	0.00E+00	1.59E-01	2.10E-01
Bk	247	97	0.00E+00	3.69E-02	1.06E+00
Bk	249	97	0.00E+00	3.24E-01	1.66E+03
Bk	250	97	0.00E+00	3.34E+04	3.90E+06
Cf	249	98	4.50E+01	1.54E-01	4.14E+00

Nuclide		Atomic Number	Pu-239 FGE①	Decay Heat② (W/g)	Specific Activity③ (Ci/g)
Cf	250	98	0.00E+00	4.12E+00	1.11E+02
Cf	251	98	9.00E+01	5.89E-02	1.60E+00
Cf	252	98	0.00E+00	4.06E+01	5.44E+02
Cf	254	98	0.00E+00	9.10E-01	8.50E+03
Es	252	99	0.00E+00	4.37E+01	1.11E+03
Es	253	99	0.00E+00	9.91E+02	2.52E+04
Es	254	99	0.00E+00	7.35E+01	1.88E+03
Es	254m	99	0.00E+00	1.69E+03	3.14E+05

Notes:

① American National Standards Institute/American Nuclear Society (ANSI/ANS), 1981, *Nuclear Criticality Control of Special Actinide Elements*, ANSI/ANS-8.15-1981, American National Standards Institute/American Nuclear Society, Washington, D.C.

② International Commission on Radiological Protection, 1983. International Commission on Radiological Protection, 1983, *Radionuclide Transformations: Energy and Intensity of Emissions*, Annals of the International Commission on Radiological Protection-38, Volumes 11-13, Pergamon Press, Oxford.

③ Walker, F.W., Kiravac, G.J., and Rourke, F.M., 1983, *Chart of the Nuclides*, 13th Edition, Knolls Atomic Power Laboratories, Schenectady, NY.

④ NA = Not applicable. These isotopes are stable and thus have decay heats and specific activities of zero.

3.2 Radiation Dose Rates

3.2.1 Requirements

The external radiation surface dose rate of an individual payload container shall be less than or equal to the limits specified in Table 3.2-1.

Table 3.2-1 – Maximum Surface Dose Rate Limits

Payload Container	Maximum Surface Dose (mrem/hr)
55-Gallon Drum	200
Standard Pipe Overpack	200
S100 Pipe Overpack	179
S200 Pipe Overpack	200
S300 Pipe Overpack	155
85-Gallon Drum	200
100-Gallon Drum	200
SWB	200
TDOP	200

The external radiation dose rates of the TRUPACT-II and the HalfPACT shall be less than or equal to 200 millirem per hour (mrem/hr) at the surface and less than or equal to 10 mrem/hr at 2 meters.

Additional payload container shielding, beyond that identified in Section 2.9 as an integral component of the payload container, shall not be used to meet the above requirements. However, payload containers that meet the above radiation dose rate requirements without shielding may be shielded to levels that are *as-low-as-reasonably-achievable* (ALARA).

3.2.2 Methods of Compliance and Verification

The payload container surface dose rate shall be measured and compliance with the applicable limit recorded on the PCTCD or OPCTCD (see Section 6.2.1). Measurements shall be made with instruments traceable to a national standard. The dose rate for the TRUPACT-II and HalfPACT at the surface and at 2 meters shall be measured and compliance determined and documented in accordance with site procedures.

This page intentionally left blank.

3.3 Activity Limits

3.3.1 Requirements

The TRUPACT-II and HalfPACT are limited to a maximum total activity of 406 curies (Ci) when packaging payloads of either S100 or S300 pipe overpacks. The S100 and S300 pipe overpack payloads are limited to sealed neutron sources in the forms specified in Table 3.3-1. Each payload shall be acceptable for shipment only if the determined activity plus the error (i.e., one standard deviation) meets this limit.

Table 3.3-1 – Sealed Source Forms for S100 and S300 Pipe Overpacks

^{241}Am Be	^{238}Pu O	^{239}Pu Li	^{241}Am
^{238}Pu Be	^{239}Pu O	^{238}Pu B	^{238}Pu
^{239}Pu Be	^{244}Cm O	^{239}Pu F	^{239}Pu
^{241}Am O	^{241}Am Li	^{238}Pu ^{13}C	^{244}Cm

The contents of each S200 pipe overpack are limited to the radionuclides and associated activities listed in Table 3.3-2 for both the S200-A and S200-B shield insert configurations. Each S200 pipe overpack shall be acceptable for shipment only if the determined activity plus the error (i.e., one standard deviation) meets the applicable limit.

No activity limits exist for 55-gallon drums, standard pipe overpacks, 85-gallon drums, 100-gallon drums, SWBs, or TDOPs.

3.3.2 Methods of Compliance and Verification

Compliance with the activity requirements is similar to the compliance methodology described in Section 3.1.2.

The total activity plus the error (i.e., one standard deviation) for a payload of S100 or S300 pipe overpacks shall be calculated and compared to the limit (406 Ci).

For each S200 pipe overpack, the sum of "partial fractions" for any combination of radionuclides present in the waste must be less than or equal to one. The limits for individual radionuclides are specified in Table 3.3-2.

No activity limits exist for 55-gallon drums, standard pipe overpacks, 85-gallon drums, 100-gallon drums, SWBs, or TDOPs.

This page intentionally left blank.

Table 3.3-2 – Limiting Activity per S200 Pipe Overpack

Radio-nuclide Name	S200-A Limiting Activity (Ci)Φ	S200-B Limiting Activity (Ci)Φ
^{3}H	unlimited	unlimited
^{14}C	unlimited	unlimited
^{22}Na	3.722E-02	2.343E-02
^{32}P	unlimited	unlimited
^{51}Cr	1.226E+01	1.226E+01
^{54}Mn	8.440E-02	4.331E-02
^{55}Fe	unlimited	unlimited
^{59}Fe	4.192E-02	2.577E-02
^{57}Co	2.641E+01	2.641E+01
^{58}Co	8.829E-02	4.471E-02
^{60}Co	1.906E-02	1.195E-02
^{59}Ni	unlimited	unlimited
^{63}Ni	unlimited	unlimited
^{64}Cu	7.156E+00	4.600E+00
^{65}Zn	9.129E-02	5.486E-02
^{73}As	1.055E+03	1.055E+03
^{79}Se	unlimited	unlimited
^{85}Kr	1.363E+02	3.709E+01
^{86}Rb	5.643E-01	3.353E-01
^{89}Sr	7.224E+02	3.920E+02
^{90}Sr	unlimited	unlimited
^{88}Y	1.709E-02	1.110E-02
^{90}Y	1.328E+06	9.330E+05
^{90m}Y	6.476E-01	2.442E-01
^{91}Y	1.572E+01	9.695E+00
^{88}Zr	9.496E-01	7.384E-01
^{90}Zr	unlimited	unlimited
^{90m}Zr	unlimited	unlimited
^{93}Zr	1.975E+07	1.975E+07
^{95}Zr	1.248E-01	5.705E-02
^{95}Nb	1.100E-01	5.212E-02
^{95m}Nb	8.103E+00	8.103E+00

Radio-nuclide Name	S200-A Limiting Activity (Ci)Φ	S200-B Limiting Activity (Ci)Φ
^{103}Ru	6.524E-01	1.750E-01
^{106}Ru	unlimited	unlimited
^{103m}Rh	1.618E+05	1.618E+05
^{106}Rh	6.710E-01	2.764E-01
^{107}Pd	unlimited	unlimited
^{109m}Ag	2.974E+03	2.974E+03
^{110}Ag	3.900E+00	1.594E+00
^{110m}Ag	2.521E-02	1.351E-02
^{109}Cd	2.974E+03	2.974E+03
^{113m}Cd	7.540E+03	7.540E+03
^{119m}Sn	6.826E+02	6.826E+02
^{121m}Sn	5.948E+03	5.948E+03
^{123}Sn	7.589E+00	4.521E+00
^{126}Sn	1.726E+02	1.726E+02
^{125}Sb	5.782E-01	1.908E-01
^{126}Sb	4.239E-02	1.826E-02
^{126m}Sb	9.044E-02	3.658E-02
^{123}Te	unlimited	unlimited
^{123m}Te	7.703E+00	7.703E+00
^{125m}Te	1.542E+03	1.542E+03
^{127}Te	7.613E+01	4.597E+01
^{127m}Te	1.323E+03	5.207E+02
^{125}I	1.647E+03	1.647E+03
^{129}I	1.465E+03	1.465E+03
^{131}I	9.832E-01	5.754E-01
^{134}Cs	6.216E-02	2.832E-02
^{135}Cs	unlimited	unlimited
^{137}Cs	2.181E-01	8.747E-02
^{133}Ba	1.142E+00	1.142E+00
^{137}Ba	unlimited	unlimited
^{137m}Ba	2.060E-01	8.261E-02
^{141}Ce	2.011E+01	2.011E+01

Radio-nuclide Name	S200-A Limiting Activity (Ci)Φ	S200-B Limiting Activity (Ci)Φ
^{99}Tc	1.693E+07	1.693E+07
^{99m}Tc	1.385E+01	1.385E+01
^{144m}Pr	5.304E+01	3.512E+01
^{146}Pm	1.958E-01	8.003E-02
^{147}Pm	1.175E+06	1.175E+06
^{146}Sm	unlimited	unlimited
^{147}Sm	unlimited	unlimited
^{151}Sm	3.504E+05	3.504E+05
^{150}Eu	1.001E-01	4.605E-02
^{152}Eu	5.488E-02	3.263E-02
^{154}Eu	4.915E-02	2.843E-02
^{155}Eu	1.743E+02	1.743E+02
^{152}Gd	unlimited	unlimited
^{153}Gd	1.898E+02	1.898E+02
^{168}Tm	8.380E-02	4.045E-02
^{182}Ta	4.298E-02	2.631E-02
^{198}Au	9.004E-01	4.886E-01
^{207}Tl	2.733E+01	1.469E+01
^{208}Tl	1.497E-02	9.959E-03
^{209}Tl	2.596E-02	1.678E-02
^{209}Pb	unlimited	unlimited
^{210}Pb	2.589E+03	2.589E+03
^{211}Pb	1.786E+00	8.441E-01
^{212}Pb	4.342E+00	4.342E+00
^{214}Pb	1.681E+00	1.589E+00
^{207}Bi	4.786E-02	2.598E-02
^{210}Bi	unlimited	unlimited
^{211}Bi	8.296E+00	8.296E+00
^{212}Bi	6.418E-01	3.564E-01
^{213}Bi	2.920E+00	1.052E+00
^{214}Bi	3.569E-02	2.213E-02
^{209}Po	1.519E+01	8.164E+00
^{210}Po	7.613E+03	3.813E+03
^{211}Po	1.055E+01	5.124E+00

Radio-nuclide Name	S200-A Limiting Activity (Ci)Φ	S200-B Limiting Activity (Ci)Φ
^{144}Ce	1.539E+02	1.539E+02
^{144}Pr	1.779E+00	1.126E+00
^{214}Po	unlimited	unlimited
^{215}Po	2.053E+03	9.111E+02
^{216}Po	4.824E+03	2.419E+03
^{218}Po	unlimited	unlimited
^{211}At	6.139E+01	2.565E+01
^{217}At	1.968E+03	8.069E+02
^{219}Rn	7.163E+00	7.163E+00
^{220}Rn	3.632E+02	1.115E+02
^{222}Rn	8.103E+02	2.176E+02
^{221}Fr	2.066E+01	2.066E+01
^{223}Fr	1.078E+01	5.211E+00
^{223}Ra	5.380E+00	5.380E+00
^{224}Ra	5.031E+01	5.031E+01
^{225}Ra	3.668E+02	3.668E+02
^{226}Ra	1.065E+02	1.065E+02
^{228}Ra	5.749E+03	5.749E+03
^{225}Ac	8.245E+01	7.320E+01
^{227}Ac	3.927E+04	3.927E+04
^{228}Ac	7.672E-02	4.385E-02
^{227}Th	4.786E+00	4.786E+00
^{228}Th	7.082E+02	7.082E+02
^{229}Th	2.522E+01	2.522E+01
^{230}Th	1.352E+03	1.336E+03
^{231}Th	2.833E+02	2.833E+02
^{232}Th	2.841E+03	2.809E+03
^{234}Th	9.901E+02	9.901E+02
^{231}Pa	1.330E+01	1.330E+01
^{233}Pa	2.262E+00	2.262E+00
^{234}Pa	5.300E-02	2.859E-02
^{234m}Pa	3.751E+00	2.161E+00
^{232}U	8.615E+02	8.463E+02
^{233}U	1.179E+03	1.130E+03

Radio-nuclide Name	S200-A Limiting Activity (Ci)①	S200-B Limiting Activity (Ci)①
^{212}Po	unlimited	unlimited
^{213}Po	2.147E+03	1.038E+03
^{236}U	1.301E+03	1.286E+03
^{237}U	1.002E+01	1.002E+01
^{238}U	1.459E+01	1.443E+01
^{239}U	8.798E+00	4.327E+00
^{240}U	7.356E+02	7.356E+02
^{237}Np	1.416E+02	1.416E+02
^{238}Np	8.656E-02	4.996E-02
^{239}Np	5.101E+00	5.101E+00
^{240}Np	8.373E-02	4.282E-02
^{240m}Np	3.198E-01	1.524E-01
^{236}Pu	5.764E+02	5.597E+02
^{238}Pu	6.171E+02	6.087E+02
^{239}Pu	9.319E+02	8.655E+02
^{240}Pu	1.158E+02	1.145E+02
^{241}Pu	3.874E+06	3.874E+06
^{242}Pu	1.334E+00	1.318E+00
^{243}Pu	9.208E+01	9.208E+01
^{244}Pu	5.548E-03	5.485E-03
^{241}Am	2.788E+02	2.788E+02
^{242}Am	7.973E+05	7.973E+05
^{242m}Am	1.095E+02	1.095E+02
^{243}Am	1.409E+02	1.409E+02

Radio-nuclide Name	S200-A Limiting Activity (Ci)①	S200-B Limiting Activity (Ci)①
^{234}U	1.202E+03	1.185E+03
^{235}U	5.003E+00	5.003E+00
^{245}Am	2.809E+01	2.809E+01
^{240}Cm	1.241E+02	1.227E+02
^{242}Cm	7.823E+01	7.722E+01
^{243}Cm	6.475E+00	6.475E+00
^{244}Cm	4.356E+00	4.306E+00
^{245}Cm	2.649E+01	2.619E+01
^{246}Cm	1.885E-02	1.864E-02
^{247}Cm	1.175E+00	7.922E-01
^{248}Cm	6.126E-05	6.057E-05
^{250}Cm	7.043E-06	6.963E-06
^{247}Bk	5.606E+00	5.606E+00
^{249}Bk	5.710E+03	5.644E+03
^{250}Bk	6.133E-02	3.558E-02
^{249}Cf	1.175E+00	1.175E+00
^{250}Cf	5.989E-03	5.921E-03
^{251}Cf	1.237E+01	1.237E+01
^{252}Cf	1.548E-04	1.530E-04
^{254}Cf	4.781E-06	4.727E-06
^{252}Es	4.418E-01	2.180E-01
^{253}Es	4.677E+01	4.453E+01
^{254}Es	3.681E+01	3.681E+01
^{254m}Es	9.086E-03	8.561E-03

Note:

① The designation of "unlimited" is made for any radionuclide whose limiting activity is greater than $1x10^8$ curies (Ci).

This page intentionally left blank.

4.0 CHEMICAL PROPERTIES REQUIREMENTS

4.1 Pyrophoric Materials

A pyrophoric (solid) is defined as:

> Any solid material, other than one classed as an explosive, which under normal conditions is liable to cause fires through friction, retained heat from manufacturing or processing, or which can be ignited readily and when ignited burns so vigorously and persistently as to create a serious transportation, handling, or disposal hazard. Included are spontaneously combustible and water-reactive materials.[1]

Examples of pyrophoric radionuclides are metallic plutonium and americium. Examples of nonradioactive pyrophorics, or materials/wastes that may cause a pyrophoric-type event, are organic peroxides, sodium metal, and chlorates.

All waste generating sites administratively control the procurement, distribution, use, and disposal of nonradioactive pyrophoric materials. In general, pyrophoric materials are not permitted in TRU process areas. The quantity of pyrophoric materials that does enter any process is strictly limited and controlled by site safety considerations.

4.1.1 Requirements

Radioactive pyrophoric materials shall be present only in small residual amounts (≤1 percent [weight]) in payload containers. Radioactive pyrophorics in concentrations greater than 1 percent by weight and all nonradioactive pyrophorics shall be reacted (or oxidized) and/or otherwise rendered nonreactive prior to placement in the payload container.

4.1.2 Methods of Compliance and Verification

Compliance shall be by one, or a combination, of the following methods:

- Review of records and database information, which may include knowledge of process
- Administrative and procurement controls.

[1] U.S. Nuclear Regulatory Commission (NRC), *Pyrophoric definition*, Code of Federal Regulations Title 10 (10 CFR) §61.2, U.S. Nuclear Regulatory Commission, Washington, D.C.

This page intentionally left blank.

4.2 Explosives, Corrosives, and Compressed Gases

An explosive is defined as:

> Any substance or article, including a device, which is designed to function by explosion (i.e., an extremely rapid release of gas and heat) or which, by chemical reaction within itself, is able to function in a similar manner.[1]

Examples of explosives are ammunition, dynamite, black powder, detonators, nitroglycerine, urea nitrate, and picric acid.

Corrosives are defined as:

> Aqueous materials which have a pH less than or equal to 2 or greater than or equal to 12.5.[2]

The physical form of the waste and waste generating procedures at the sites ensure that the waste is in a nonreactive form. All waste generating sites control the procurement, distribution, use, and disposal of explosives. Most sites have lists of restricted materials that include explosives. Typically, the TRU waste generating and storage sites do not allow explosives in the same facility as TRU waste. In addition, sampling programs for pH of inorganic sludges have shown that the sludges consistently meet the limitation on corrosives.[3]

4.2.1 Requirements

Explosives, corrosives, and compressed gases (pressurized containers) are prohibited from the payload.

Used (i.e., empty) aerosol cans are allowed as they do not impact the package internal pressure or flammability. Verification that any aerosol cans present in retrievably stored waste are empty shall be by radiography and/or process knowledge and shall be documented in site-specific compliance documents. Any aerosol cans that are not empty are prohibited.

4.2.2 Methods of Compliance and Verification

Compliance shall be by one, or a combination, of the following methods:

- Visual examination of the waste
- Administrative and procurement controls
- Radiography
- Sampling program
- Review of records and database information, which may include knowledge of process.

---

[1] U.S. Department of Transportation (DOT), *An Explosive; definition*, Code of Federal Regulations Title 49 (49 CFR) § 173.50, U.S. Department of Transportation, Washington, D.C.

[2] U.S. Environmental Protection Agency (EPA), *Characteristic of corrosivity*, Code of Federal Regulations Title 40 (40 CFR) § 261.22, U.S. Environmental Protection Agency, Washington, D.C.

[3] U.S. Department of Energy (DOE), *CH-TRU Waste Content Codes (CH-TRUCON)*, current revision, DOE/WIPP 01-3194, U.S. Department of Energy, Carlsbad Field Office, Carlsbad, New Mexico.

This page intentionally left blank.

4.3 Chemical Composition

The chemical constituents allowed in a given waste material type (e.g., concreted inorganic particulate waste) are restricted so that a conservative bounding G value may be established for the gas generation potential in each waste material type.

Compliance with the lists of allowable materials in Table 4.3-1 through Table 4.3-8 has been demonstrated for each chemical list corresponding to each content code. The assignment of any content code to a waste material type will also be conservative with respect to G values. For example, if an inorganic solid waste material type (II.1) at a site contains materials that do not comply with the materials listed in Table 4.3-4 (e.g., solid organics excluding packaging), it shall be classified as Waste Material Type III.1 (solid organics), which has twice the bounding G value, and the appropriate content code shall be applied. Similarly, Waste Material Type II.2 may only contain materials with no gas generation potential (G value of zero).

4.3.1 Requirements

Chemical constituents in a payload shall conform to the lists of allowable materials in Table 4.3-1 through Table 4.3-8. The total quantity of chemicals/materials not listed as allowed materials for a given waste material type in any payload container is restricted to less than 5 weight percent total. These materials, if present, are, in general, present as trace chemicals/materials (materials that occur individually in the waste in quantities less than 1 weight percent).

4.3.2 Methods of Compliance and Verification

Compliance shall be by one, or a combination, of the following methods:

- Review of records and database information, which may include knowledge of process
- Administrative and procurement controls
- Sampling program.

Content codes approved by the WIPP CH-TRU Payload Engineer comply with the chemical composition requirements. Any proposed change in process technology at a generator site for a given content code must be evaluated for compliance with the lists of allowable materials in Table 4.3-1 through Table 4.3-8. This change shall be evaluated and approved by the WIPP CH-TRU Payload Engineer for compliance with existing waste material type restrictions. All changes in the chemical characteristics of the waste shall be recorded, and the date of the new process, description of the process, and list of new chemicals submitted to the WIPP CH-TRU Payload Engineer. The WIPP CH-TRU Payload Engineer may allow transport of the waste under the approved content code if none of the restrictions are violated as a result of the change. If the WIPP CH-TRU Payload Engineer determines that the old content code and corresponding waste material type(s) are no longer valid, the waste may be assigned to a new content code for shipment under the appropriate approved waste material type. The NRC shall be notified of any change not covered by the authorized contents as defined by this document (e.g., addition of a new waste form with a new G value) through an amendment to the CH-TRAMPAC. All

changes exceeding currently authorized contents shall be submitted to the NRC for review and approval prior to incorporation into a chemical list or content code.

Table 4.3-1 – Allowable Materials for Waste Material Type I.1① Absorbed, Adsorbed, or Solidified Inorganic Liquid

Absorbents/adsorbents (e.g., Celite®, diatomaceous earth, diatomite, Florco®, Oil-Dri®, perlite, vermiculite)
Acids, inorganic
Alumina cement
Aquaset® products (for aqueous solutions)
Aqueous sludges
Aqueous solutions/water
Asbestos
Ash (e.g., ash bottoms, fly ash, soot)
Batteries, dry (e.g., flashlight)
Ceramics (e.g., molds and crucibles)
Clays (e.g., bentonite)
Concrete
Envirostone® (no organic emulsifiers allowed)
Fiberglass, inorganic
Filter media, inorganic
Firebrick
Glass (e.g., borosilicate glass, labware, leaded glass, Raschig rings)
Graphite (e.g., molds and crucibles)
Grit
Heel (e.g., ash heel; soot heel; firebrick heel; sand, slag, and crucible heel)
Insulation, inorganic
Magnesia cement (e.g., Ramcote® cement)
Metal hydroxides
Metal oxides (e.g., slag)
Metals (e.g., aluminum, cadmium, copper, steel, tantalum, tungsten, zinc)
Nitrates (e.g., ammonium nitrate, sodium nitrate)
Petroset® products (for aqueous solutions)
Portland cement
Sand/soil, inorganic
Salts (e.g., calcium chloride, calcium fluoride, sodium chloride)
Other inorganic materials

Note:

① Other chemicals or materials not identified in this table are allowed provided that they meet the requirements of Section 4.3.1. All materials in the final waste form must be inert (nonreactive), be in a nonreactive form, or have been rendered nonreactive.

Table 4.3-2 – Allowable Materials for Waste Material Type I.2① Soils, Solidified Particulates, or Sludges Formed from Precipitation

Absorbents/adsorbents (e.g., Celite®, diatomaceous earth, diatomite, Florco®, Oil-Dri®, perlite, vermiculite)
Alumina cement
Aquaset® products (for aqueous solutions)
Aqueous sludges
Aqueous solutions/water
Asbestos
Ash (e.g., ash bottoms, fly ash, soot)
Batteries, dry (e.g., flashlight)
Ceramics (e.g., molds and crucibles)
Clays (e.g., bentonite)
Concrete
Fiberglass, inorganic
Filter media, inorganic
Firebrick
Glass (e.g., borosilicate glass, labware, leaded glass, Raschig rings)
Graphite (e.g., molds and crucibles)
Grit
Heel (e.g., ash heel; soot heel; firebrick heel; sand, slag, and crucible heel)
Insulation, inorganic
Magnesia cement (e.g., Ramcote® cement)
Metal hydroxides
Metal oxides (e.g., slag)
Metals (e.g., aluminum, cadmium, copper, steel, tantalum, tungsten, zinc)
Nitrates (e.g., ammonium nitrate, sodium nitrate)
Petroset® products (for aqueous solutions)
Portland cement
Sand/soil, inorganic
Salts (e.g., calcium chloride, calcium fluoride, sodium chloride)
Other inorganic materials

Note:

① Other chemicals or materials not identified in this table are allowed provided that they meet the requirements of Section 4.3.1. All materials in the final waste form must be inert (nonreactive), be in a nonreactive form, or have been rendered nonreactive.

Table 4.3-3 – Allowable Materials for Waste Material Type I.3① Concreted Inorganic Particulate Waste

Absorbents/adsorbents (e.g., Celite®, diatomaceous earth, diatomite, Florco®, Oil-Dri®, perlite, vermiculite)
Asbestos
Ash (e.g., ash bottoms, fly ash, soot)
Batteries, dry (e.g., flashlight)
Ceramics (e.g., molds and crucibles)
Clays (e.g., bentonite)
Concrete
Fiberglass, inorganic
Filter media, inorganic
Firebrick
Glass (e.g., borosilicate glass, labware, leaded glass, Raschig rings)
Graphite (e.g., molds and crucibles)
Grit
Heel (e.g., ash heel; soot heel; firebrick heel; sand, slag, and crucible heel)
Insulation, inorganic
Metal hydroxides
Metal oxides (e.g., slag)
Metals (e.g., aluminum, cadmium, copper, steel, tantalum, tungsten, zinc)
Nitrates (e.g., ammonium nitrate, sodium nitrate)
Portland cement
Sand/soil, inorganic
Salts (e.g., calcium chloride, calcium fluoride, sodium chloride)
Water (maximum of 30 weight percent unbound water)
Other inorganic materials

Note:

① Other chemicals or materials not identified in this table are allowed provided that they meet the requirements of Section 4.3.1. All materials in the final waste form must be inert (nonreactive), be in a nonreactive form, or have been rendered nonreactive.

Table 4.3-4 – Allowable Materials for Waste Material Types II.1 and II.2① Solid Inorganic Materials

Absorbents/adsorbents (e.g., Celite®, Florco®, Oil-Dri®, diatomite, perlite, vermiculite)②
Asbestos
Ash (e.g., ash bottoms, fly ash, soot)
Batteries, dry (e.g., flashlight)
Ceramics (e.g., molds and crucibles)
Clays (e.g., bentonite)
Concrete/Portland cement (surface contaminated only)
Fiberglass, inorganic
Filter media, inorganic
Firebrick
Glass (e.g., borosilicate glass, labware, leaded glass, Raschig rings)
Graphite (e.g., molds and crucibles)
Grit
Heel (e.g., ash heel; soot heel; firebrick heel; sand, slag, and crucible heel)
Insulation, inorganic
Magnesium alloy
Metal oxides (e.g., slag)
Metals (e.g., aluminum, cadmium, copper, steel, tantalum, tungsten, zinc)
Nitrates (e.g., ammonium nitrate, sodium nitrate)
Salts (e.g., calcium chloride, calcium fluoride, sodium chloride)
Sand/soil, inorganic
Other inorganic materials

Notes:

① Other chemicals or materials not identified in this table are allowed provided that they meet the requirements of Section 4.3.1. All materials in the final waste form must be inert (nonreactive), be in a nonreactive form, or have been rendered nonreactive.

② Dry absorbents/adsorbents and other dry desiccants are allowed if they contain no absorbed or adsorbed liquids.

Table 4.3-5 – Allowable Materials for Waste Material Type II.3① Homogeneous Solid Inorganic Materials with Unbound Absorbed Ambient Moisture (≤6% by weight)

Any material in Waste Material Types II.1 and II.2 (Table 4.3-4) and water as unbound absorbed ambient moisture (≤6% by weight).

Note:

① Other chemicals or materials not identified in this table are allowed provided that they meet the requirements of Section 4.3.1. All materials in the final waste form must be inert (nonreactive), be in a nonreactive form, or have been rendered nonreactive.

Table 4.3-6 – Allowable Materials for Waste Material Type III.1[①] Solid Organic Materials

Any material in Waste Types I or II (Table 4.3-1 through Table 4.3-5)
Absorbent polymers, organic
Acids, solid, organic
Asphalt
Bakelite® [②]
Cellulose (e.g., Benelex®, cotton Conwed®, paper, rags, rayon, wood)
Cellulose acetate butyrate
Cellulose propionate
Chlorinated polyether
Detergent, solid (e.g., emulsifiers, surfactants)
Fiberglass, organic
Filter media, organic
Greases, commercial brands
Insulation, organic
Leaded rubber (e.g., gloves, aprons, sheet material)
Leather
Oil (e.g., petroleum, mineral)
Organophosphates (e.g., tributyl phosphate, dibutyl phosphate, monobutyl phosphite)
Paint, dry (e.g., floor/wall paint, ALARA)
Plastics [e.g., polycarbonate, polyethylene, polymethyl methacrylate (Plexiglas®, Lucite®), polysulfone, polytetrafluoroethylene (Teflon®), polyvinyl acetate, polyvinyl chloride, polyvinylidene chloride (saran)]
Polyamides (nylon)
Polychlorotrifluoroethylene (e.g., Kel-F®)
Polyesters (e.g., Dacron®, Mylar®)
Polyethylene glycol (e.g., Carbowax®)
Polyimides
Polyphenyl methacrylate
Polypropylene (e.g., Ful-Flo® filters)
Polyurethane
Polyvinyl alcohol
Resins (e.g., aniline-formaldehyde, melamine-formaldehyde, organic resins, phenol-formaldehyde, phenolic resins, urea-formaldehyde)
Rubber, natural or synthetic [e.g., chlorosulfonated polyethylene (Hypalon®), ethylene-propylene rubber, EPDM, polybutadiene, polychloroprene (neoprene), polyisobutylene, polyisoprene, polystyrene, rubber hydrochloride (pliofilm®)]
Sand/Soil
Waxes, commercial brands

Notes:

① Other chemicals or materials not identified in this table are allowed provided that they meet the requirements of Section 4.3.1. All materials in the final waste form must be inert (nonreactive), be in a nonreactive form, or have been rendered nonreactive.

② Bakelite is a trademark for materials that can be composed of several different polymers, including polyethylene, polypropylene, epoxy, phenolic, polystyrene, phenoxy, perylene, polysulfone, ethylene copolymers, ABS, acrylics, and vinyl resins and compounds.

Table 4.3-7 – Allowable Materials for Waste Material Types III.2 and III.3① Homogeneous Mixed Organic (10% by weight) and Inorganic (90% by weight) Materials

Any material in Waste Material Types I.1, I.2, I.3, II.1, II.2, II.3, or III.1 (Table 4.3-1 through Table 4.3-6), provided that the total amount of solid organic material and/or absorbed or adsorbed water is less than or equal to 10 weight percent of the total waste.

Note:

① Other chemicals or materials not identified in this table are allowed provided that they meet the requirements of Section 4.3.1. All materials in the final waste form must be inert (nonreactive), be in a nonreactive form, or have been rendered nonreactive.

Table 4.3-8 – Allowable Materials for Waste Material Type IV.1① Solidified Organics

Any material in Waste Types I, II, or III (Table 4.3-1 through Table 4.3-7)
Acids, organic
Alcohols (e.g., butanol, ethanol, isopropanol, methanol)
Esters (e.g., ethyl acetate, polyethylene glycol ester)
Ethers (e.g., ethyl ether)
Halogenated organics (e.g., bromoform; carbon tetrachloride; chlorobenzene; chloroform; 1,1-dichloroethane; 1,2-dichloroethane; 1,1-dichloroethylene; cis-1,2-dichloroethylene; methylene chloride; 1,1,2,2-tetrachloroethane; tetrachloroethylene; 1,1,1- trichloroethane; 1,1,2-trichloroethane; trichloroethylene; 1,1,2-trichloro-1,2,2-trifluoroethane)
Hydrocarbons, aliphatic (e.g., cyclohexane, n-paraffin hydrocarbons)
Hydrocarbons, aromatic (e.g., benzene; ethyl benzene; toluene; 1,2,4-trimethylbenzene; 1,3,5-trimethylbenzene; xylene)
Ketones (e.g., acetone, methyl ethyl ketone, methyl isobutyl ketone)
Trioctyl phosphine oxide

Note:

① Other chemicals or materials not identified in this table are allowed provided that they meet the requirements of Section 4.3.1. All materials in the final waste form must be inert (nonreactive), be in a nonreactive form, or have been rendered nonreactive.

4.4 Chemical Compatibility

The lists of allowable materials in Table 4.3-1 through Table 4.3-8 restrict the chemical composition of the payload. The basis for evaluating chemical compatibility is the U.S. Environmental Protection Agency (EPA) document "A Method for Determining the Compatibility of Hazardous Wastes" (EPA-600/2-80-076).[1] This method provides a systematic means of analyzing the chemical compatibility for specific combinations of chemical compounds and materials. Any incompatibilities between the payload and the packaging shall be evaluated separately if not covered by the EPA method.[1] As described in Appendix 6.1 of the CH-TRU Payload Appendices[2], the EPA method classifies individual chemical compounds into chemical groups and identifies the potential adverse reactions resulting from incompatible combinations of the groups.

4.4.1 Requirements

Chemical compatibility shall be ensured for the following four conditions:

- Chemical compatibility of the waste form within each individual payload container
- Chemical compatibility between contents of payload containers during hypothetical accident conditions
- Chemical compatibility of the waste forms with the TRUPACT-II and HalfPACT ICV
- Chemical compatibility of the waste forms with the TRUPACT-II and HalfPACT O-ring seals.

4.4.2 Methods of Compliance and Verification

Compatibility of all waste material types has been demonstrated for transport in the TRUPACT-II and HalfPACT using the chemicals listed in Table 4.3-1 through Table 4.3-8. The restrictions imposed on the chemical constituents of the content codes approved by the WIPP CH-TRU Payload Engineer ensure compliance with the compatibility requirements (see also Appendices 6.1, 6.2, 6.3, and 6.4 of the CH-TRU Payload Appendices[2]). The chemical list for each content code is formally documented by the site.

[1] Hatayama, H.K., Chen, J.J., de Vera, E.R., Stephens, R.D., and Storm, D.L., 1980, *A Method for Determining the Compatibility of Hazardous Wastes*, EPA-600/2-80-076, U.S. Environmental Protection Agency, Cincinnati, Ohio.

[2] U.S. Department of Energy (DOE), *CH-TRU Payload Appendices*, U.S. Department of Energy, Carlsbad Field Office, Carlsbad, New Mexico.

This page intentionally left blank.

5.0 GAS GENERATION REQUIREMENTS

Gas generation, concentrations, and pressures during transport of CH-TRU wastes in a TRUPACT-II or HalfPACT payload are restricted as follows:

- For any package containing water and/or organic substances that could radiolytically generate combustible gases, determination must be made by tests and measurements or by analysis of a representative package such that the following criterion is met over a period of time that is twice the expected shipment time (defined in Appendices 3.4, 3.5, and 3.6 of the CH-TRU Payload Appendices[1]): The hydrogen generated must be limited to a molar quantity that would be no more than 5 percent by volume of the innermost layer of confinement (or equivalent limits for other inflammable gases) if present at standard temperature and pressure (i.e., no more than 0.063 gram-moles/cubic foot at 14.7 pounds per square inch absolute and 32°F).
- The gases generated in the payload and released into the ICV cavity shall be controlled to maintain the pressure within the TRUPACT-II or HalfPACT ICV cavity below the acceptable design pressure of 50 pounds per square inch gauge.

The analyses presented in the TRUPACT-II[2] and HalfPACT[3] SARs show that all payloads authorized for transport in the TRUPACT-II or the HalfPACT will comply with the design pressure limit.

Specific requirements associated with the restrictions on gas generation during transport of a payload are described in detail below. For Content Codes LA 154, SQ 154, and SQ 156, compliance with the gas generation requirements must be in accordance with Appendix 6.12 of the CH-TRU Payload Appendices[1], which documents the analyses performed to demonstrate compliance with gas generation requirements and establishes conditions for compliance.

5.1 Payload Shipping Category

The CH-TRU waste at the DOE sites has been classified into "payload shipping categories" to evaluate and ensure compliance with the gas generation requirements. As shown in Appendices 6.1, 6.5, and 6.6 of the CH-TRU Payload Appendices[1], gas generation due to chemical, biological, and thermal mechanisms is insignificant during transport, and radiolysis is the primary mechanism for potential flammable gas generation.

[1] U.S. Department of Energy (DOE), *CH-TRU Payload Appendices*, U.S. Department of Energy, Carlsbad Field Office, Carlsbad, New Mexico.

[2] U.S. Department of Energy (DOE), *TRUPACT-II Shipping Package Safety Analysis Report*, USNRC Certificate of Compliance 71-9218, U.S. Department of Energy, Carlsbad Area Office, Carlsbad, New Mexico.

[3] U.S. Department of Energy (DOE), *HalfPACT Shipping Package Safety Analysis Report*, USNRC Certificate of Compliance 71-9279, U.S. Department of Energy, Carlsbad Area Office, Carlsbad, New Mexico.

Appendix 2.1 of the CH-TRU Payload Appendices[1] defines the methodology for determining a payload shipping category. A shipping category is defined by the following parameters:

- Chemical composition of the waste (waste type).
- Gas generation potential of the waste material type (quantified by the "G value" for hydrogen, which is the number of molecules of hydrogen generated per 100 electron volts (eV) of energy absorbed). Table 5.1-1 lists the G values associated with the various waste material types for CH-TRU waste.
- Gas release resistance (type of payload container and type and maximum number of confinement layers used). Appendices 6.7 and 6.8 of the CH-TRU Payload Appendices[1] provide a complete discussion of gas release resistance.

For any given payload container, the shipping category provides a basis to determine the gas generation potential of the contents and the resistance to gas release of the packaging configuration. This enables evaluation of compliance with the gas generation requirements. Two payload shipping category notations are available. A shipping site may use either the alpha-numeric or numeric notation. Complete descriptions of the two notations and the logic for determining payload shipping categories are presented in Appendix 2.1 of the CH-TRU Payload Appendices.[1]

Table 5.1-1 – CH-TRU Waste Material Types and G Values

Waste Material Type	Typical Material Description①	G Value②	Numeric Shipping Category Notation (G Value x 10^2)
I.1	Absorbed, adsorbed, or solidified inorganic liquid	1.6	0160
I.2	Soils, solidified particulates, or sludges formed from precipitation	1.3	0130
I.3	Concreted inorganic particulate waste	0.4	0040
II.1	Solid inorganic materials in plastic bags (watt*year ≤0.012)	1.7	0170
II.1	Solid inorganic materials in plastic bags (watt*year >0.012)	0.32	0032
II.2	Solid inorganic materials in metal cans	0	0000
II.3	Homogeneous solid inorganic materials with unbound absorbed ambient moisture (≤6% by weight) in metal cans	0.08	0008
III.1	Solid organic materials (watt*year ≤0.012)	3.4	0340
III.1	Solid organic materials (watt*year >0.012)	1.09	0109
III.2	Homogeneous mixed organic (10% by weight) and inorganic (90% by weight) materials in metal cans (watt*year ≤0.012)	0.34	0034
III.2	Homogeneous mixed organic (10% by weight) and inorganic (90% by weight) materials in metal cans (watt*year >0.012)	0.11	0011
III.3	Homogeneous mixed organic (10% by weight) and inorganic (90% by weight) materials in plastic bags (watt*year ≤0.012)	1.85	0185
III.3	Homogeneous mixed organic (10% by weight) and inorganic (90% by weight) materials in plastic bags (watt*year >0.012)	0.4	0040
IV.1	Solidified organics	Unknown (test)	9999

Notes:

① Appendix 3.3 of the CH-TRU Payload Appendices[1] provides a complete discussion of watt*year criteria.

② Dose-dependent G values for waste meeting the watt*year criteria (watt*year >0.012) cannot be used if absorbed, adsorbed, or solidified aqueous materials are present in the waste (see Appendix 3.3 of the CH-TRU Payload Appendices[1]). Appendices 3.1 and 3.2 of the CH-TRU Payload Appendices[1] provide a complete discussion of G values.

5.1.1 Requirements

Each payload container shall be assigned to a payload shipping category, in a content code approved by the WIPP CH-TRU Payload Engineer, that has information on the following components:

- Waste type
- Waste material type, which defines the gas generation potential
- Total resistance to gas release by the packaging confinement layers. Total resistance has specific requirements associated with
  - Confinement Layers: The inner layers of confinement around the waste materials in the payload containers shall be plastic bags and/or rigid containers (e.g., metal cans) with closures that meet the specifications outlined in Appendix 3.8 of the CH-TRU Payload Appendices.[1] Any other type of confinement layers used at the sites shall be shown, by testing or analysis, to be equivalent to one of the approved confinement layers described in Appendix 3.8. "Equivalency" shall be established by demonstration of a hydrogen release rate greater than or equal to the approved confinement layers.
  - Rigid Liner: The rigid liner and lid, if present, in a payload container shall contain a ≥0.3-in. minimum diameter hole, or a filter with a hydrogen release rate equivalent to or greater than a 0.3-in. minimum diameter hole. Otherwise, the liner must be treated as any other confinement layer with the associated resistance of the liner hole diameter or filter calculated in accordance with Appendix 2.2 of the CH-TRU Payload Appendices.[1]
  - Shipping Period: The conditions specified in Appendix 3.6 of the CH-TRU Payload Appendices[1] must be met for use of the Controlled Shipment shipping period (10 days). For other shipments (not Controlled Shipments), the appropriate shipping period [60 days (Appendix 3.4 of the CH-TRU Payload Appendices[1]) or 20 days (Appendix 3.5 of the CH-TRU Payload Appendices[1])] shall be applied based on the transport distance.

5.1.2 Methods of Compliance and Verification

5.1.2.1 Numeric Shipping Category Notation

For the numeric shipping category notation, compliance and verification of the shipping category requirements shall be by comparison of the shipping category with the allowable shipping categories for the appropriate content code in the CH-TRUCON[4] document. The shipping category and content code information is recorded in the PCTCD and OPCTCD, as applicable.

[4] U.S. Department of Energy (DOE), *CH-TRU Waste Content Codes (CH-TRUCON)*, current revision, DOE/WIPP 01-3194, U.S. Department of Energy, Carlsbad Field Office, Carlsbad, New Mexico.

5.1.2.2 Alpha-numeric Shipping Category Notation

For the alpha-numeric shipping category notation, compliance and verification of the shipping category requirements shall be by comparison of the payload container data with the allowable shipping categories from the appropriate content code in the CH-TRUCON document. The shipping category and content code information is recorded in the PCTCD and OPCTCD, as applicable.

5.1.2.3 Compliance with Specific Requirements for Total Resistance

The following paragraphs outline the methods of compliance and verification for confinement layers, rigid liner, and the shipping period.

Confinement Layers

Radiography, visual examination, administrative and procedural controls, or a combination of these methods may be used to demonstrate that the method of closure for each layer of confinement is in accordance with Appendix 3.8 of the CH-TRU Payload Appendices.[1] The waste generation procedures shall specify the maximum number of confinement layers for each waste container. The maximum number of layers may be determined from the waste management practices in use at the time the waste was packaged and available records and database information.

Rigid Liner

The requirements for the rigid liner shall be met by procurement controls and site QA procedures. Venting of the lid of a liner (along with the minimum diameter of the hole in the liner) may be controlled administratively (i.e., buying only punctured liners) or by visual examination of the liner prior to closure. Alternatively, radiography or sampling programs and existing records may be used to verify that the liner meets the requirements.

Shipping Period

The requirements for the use of the Controlled Shipment (10 days) shipping period shall be met by administrative and procedural controls as specified in Appendix 3.6 of the CH-TRU Payload Appendices[1] and Section 6.2.3. No specific conditions exist for the use of the shipping periods defined in Appendices 3.4 and 3.5 of the CH-TRU Payload Appendices.[1]

This page intentionally left blank.

5.2 Flammable (Gas/VOC) Concentration Limits

5.2.1 Requirements

As discussed in Appendices 6.1, 6.5, and 6.6 of the CH-TRU Payload Appendices[1], the primary mechanism for potential flammable gas generation in TRU wastes is radiolysis. TRU wastes to be transported in the TRUPACT-II and HalfPACT are restricted so that no flammable mixtures can occur in any layer of confinement during shipment. While the predominant flammable gas of concern is hydrogen, the presence of methane and flammable volatile organic compounds (VOCs) is also limited along with hydrogen to ensure the absence of flammable (gas/VOC) mixtures in TRU waste payloads.

5.2.2 Methods of Compliance and Verification

The evaluation of compliance with flammable (gas/VOC) limits occurs under either the analytical category or the test category.

Compliance with the flammable (gas/VOC) limits can be demonstrated under the analytical category if the payload container meets both of the following:

- The total concentration of potentially flammable VOCs within the payload container headspace is less than or equal to 500 parts per million (ppm)
- The payload container is classified as Waste Types I (10), II (20), or III (30).

If the payload container headspace exceeds 500 ppm flammable VOCs or is classified as Waste Type IV, compliance with the flammable (gas/VOC) concentration limits must be demonstrated under the test category.

If the payload container is proposed for shipment in a payload assembly comprised of payload containers of the same shipping category, compliance with the analytical decay heat limit specified per container based on the payload shipping category is required. If the payload container meets the analytical decay heat limit, compliance with the flammable (gas/VOC) limits is ensured. The analytical decay heat limit for each shipping category is described in Section 5.2.3.

If the payload container exceeds the analytical decay heat limit, compliance with the flammable (gas/VOC) limits may be demonstrated through mixing in a payload assembly of different shipping categories as described in Section 6.2.4. Alternatively, compliance with the flammable (gas/VOC) limits may be demonstrated under the test category, as described below.

Compliance with the flammable (gas/VOC) limits is demonstrated under the test category if the payload container falls into one or more of the following:

- The total concentration of potentially flammable VOCs within the payload container headspace exceeds 500 ppm. Waste Types I (10), II (20), and III (30) belong in this category.

[1] U.S. Department of Energy (DOE), *CH-TRU Payload Appendices*, U.S. Department of Energy, Carlsbad Field Office, Carlsbad, New Mexico.

- The total concentration of potentially flammable VOCs within the payload container headspace is less than or equal to 500 ppm, but the decay heat loading of the payload container exceeds the analytical limit for the shipping category of the payload container. Waste Types I (10), II (20), and III (30) belong in this category.
- A waste form does not have a fully characterized bounding G value from previous sampling or waste stream analysis. Waste Type IV (40) belongs in this category.

For test category payload containers of Waste Types I (10), II (20), and III (30), the compliance evaluation for flammable (gas/VOC) limits may be based on measurement of the headspace gas, as described in Section 5.2.5.3.

If compliance with the flammable (gas/VOC) limits cannot be demonstrated by measurement or the payload container is Waste Type IV (40), the compliance evaluation for flammable (gas/VOC) limits may be based on the results of testing, as described in Section 5.2.5.4.

The implementation of compliance methods summarized above for flammable (gas/VOC) limits is detailed in Sections 5.2.2.1 through 5.2.2.5 and illustrated in Figure 5.2-1 through Figure 5.2-5.

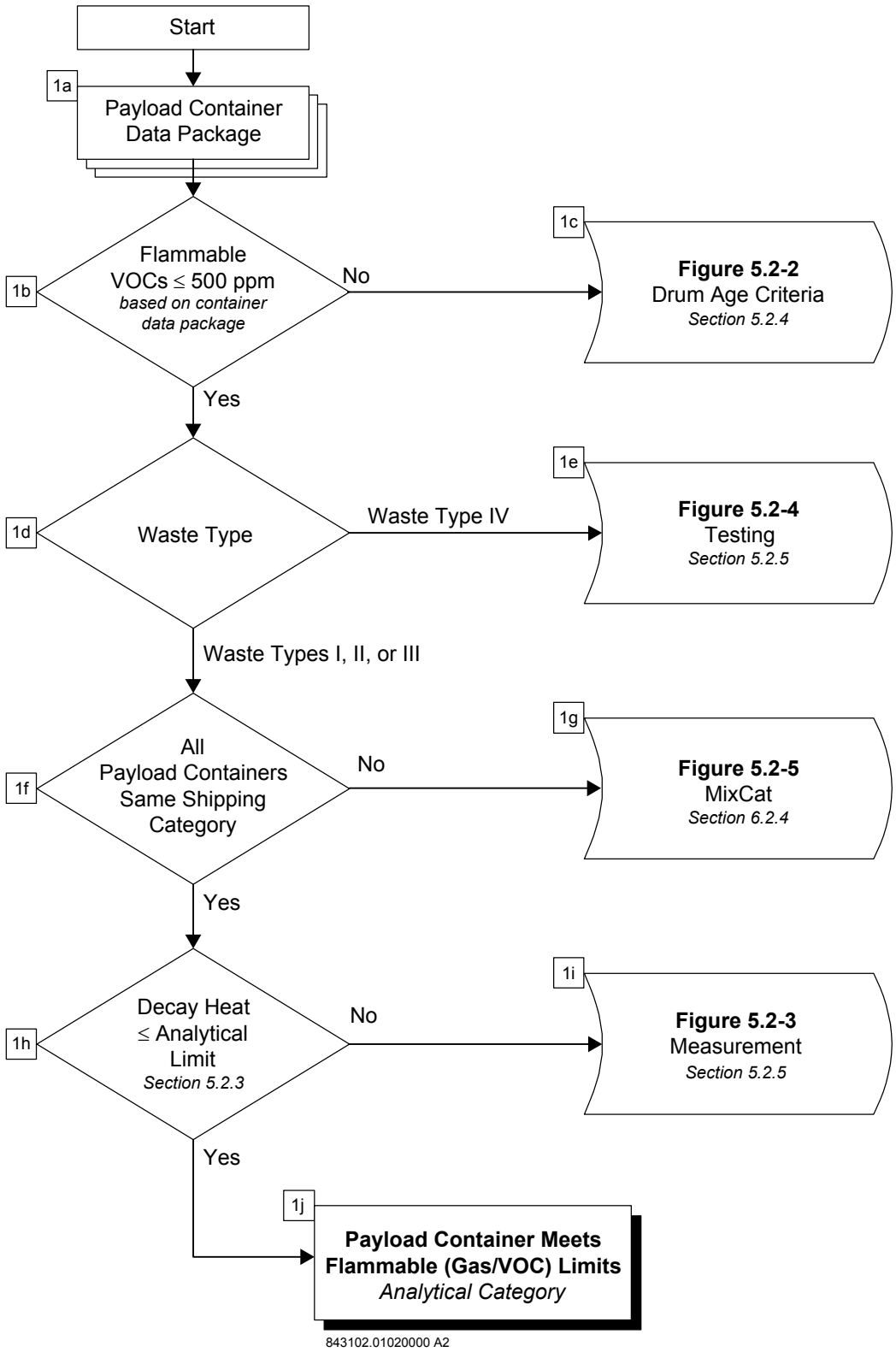

Figure 5.2-1 – Logic Diagram for Compliance with Flammable (Gas/VOC) Limits by Analysis

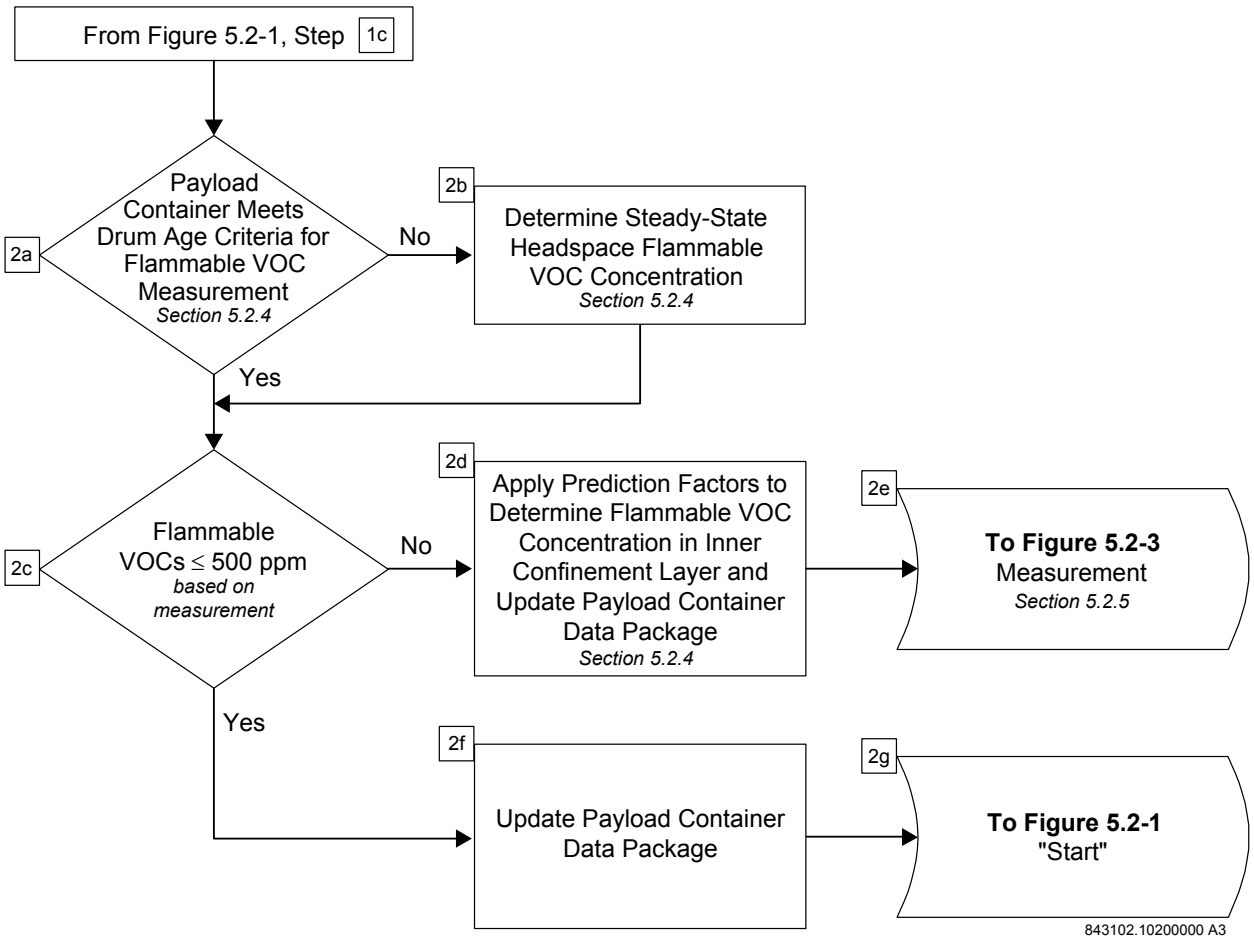

Figure 5.2-2 – Logic Diagram for Drum Age Criteria for Flammable VOC Measurement

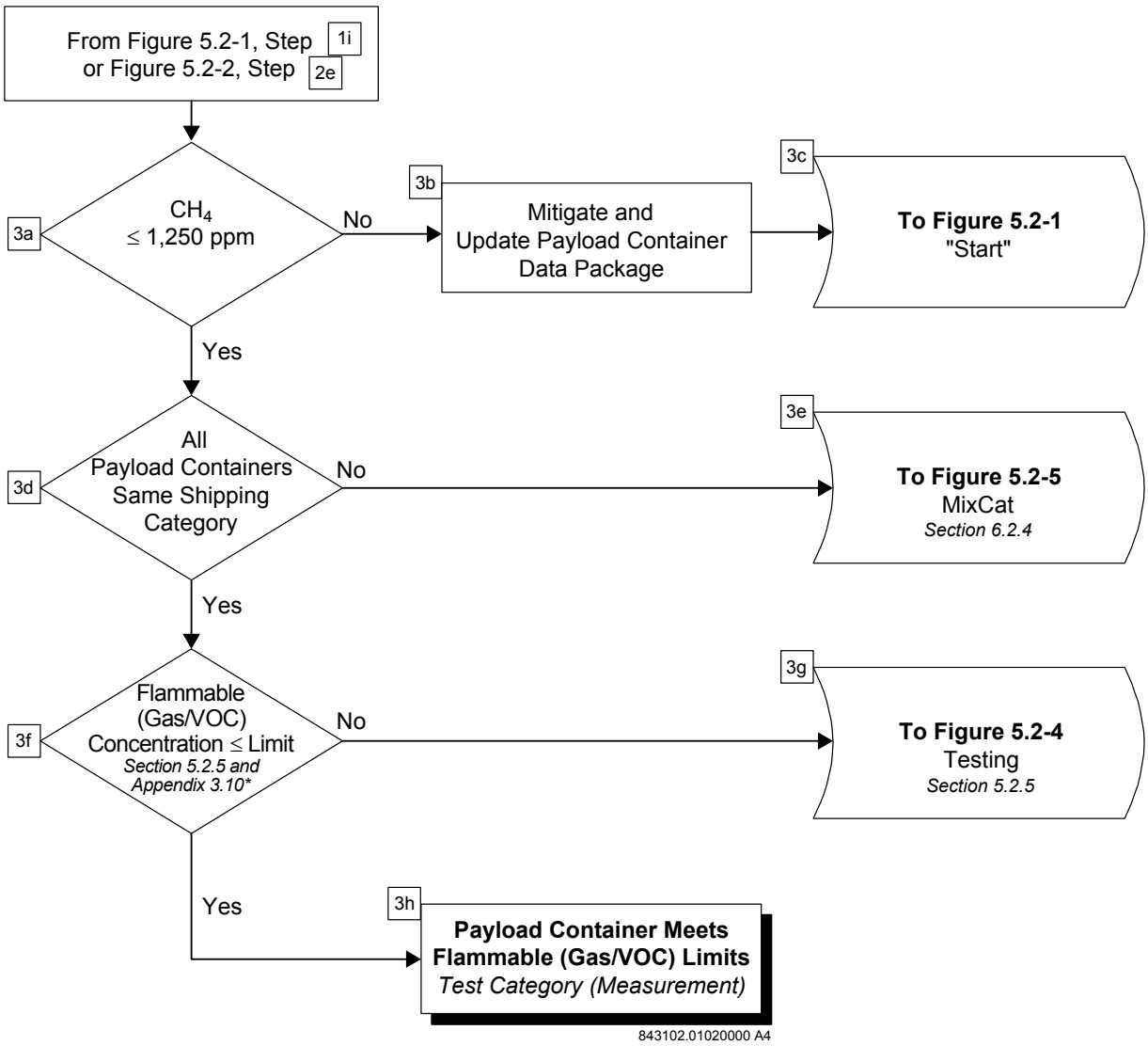

*Note: Referenced Appendix located in the CH-TRU Payload Appendices

Figure 5.2-3 – Logic Diagram for Compliance with Flammable (Gas/VOC) Limits by Measurement

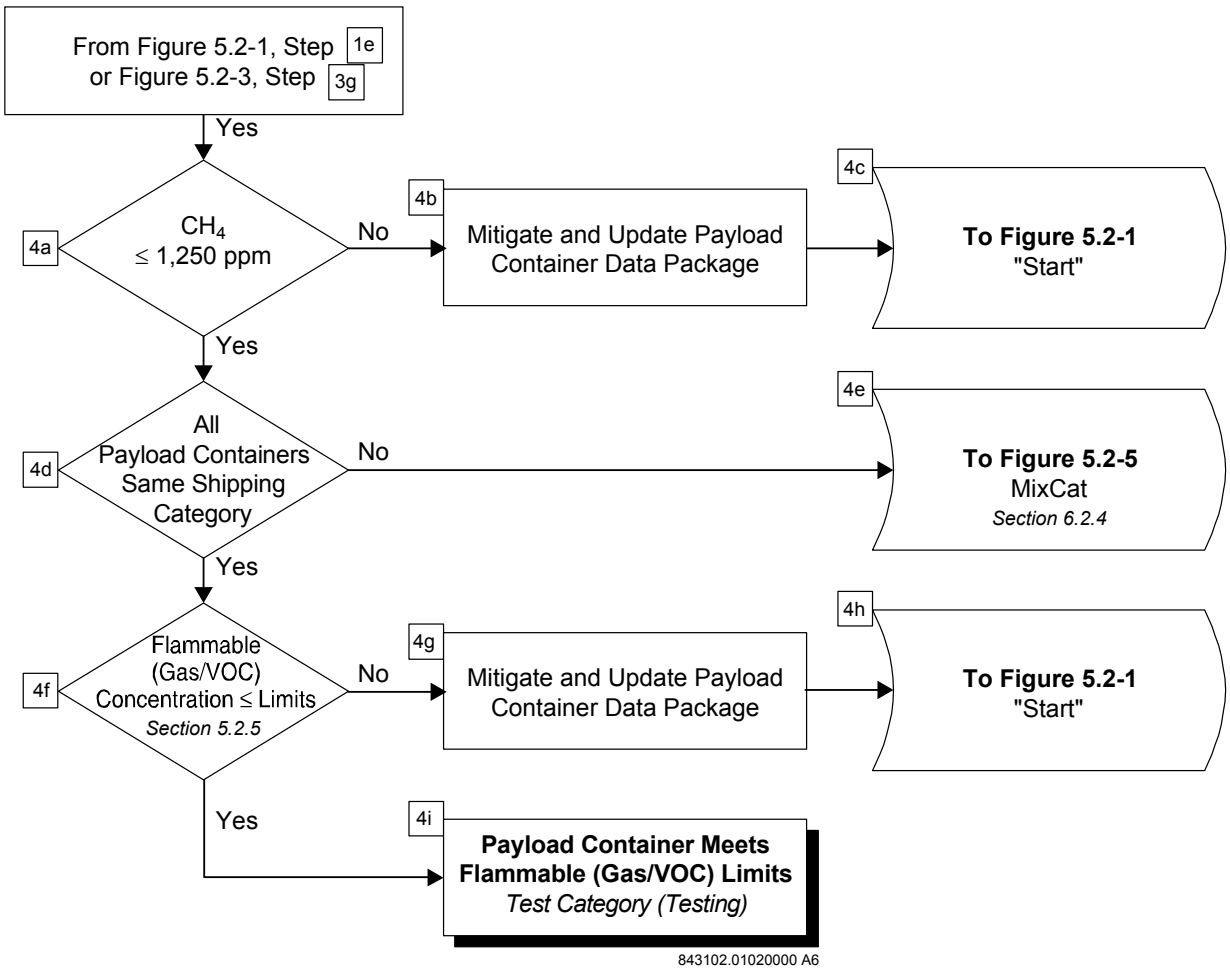

Figure 5.2-4 – Logic Diagram for Compliance with Flammable (Gas/VOC) Limits by Testing

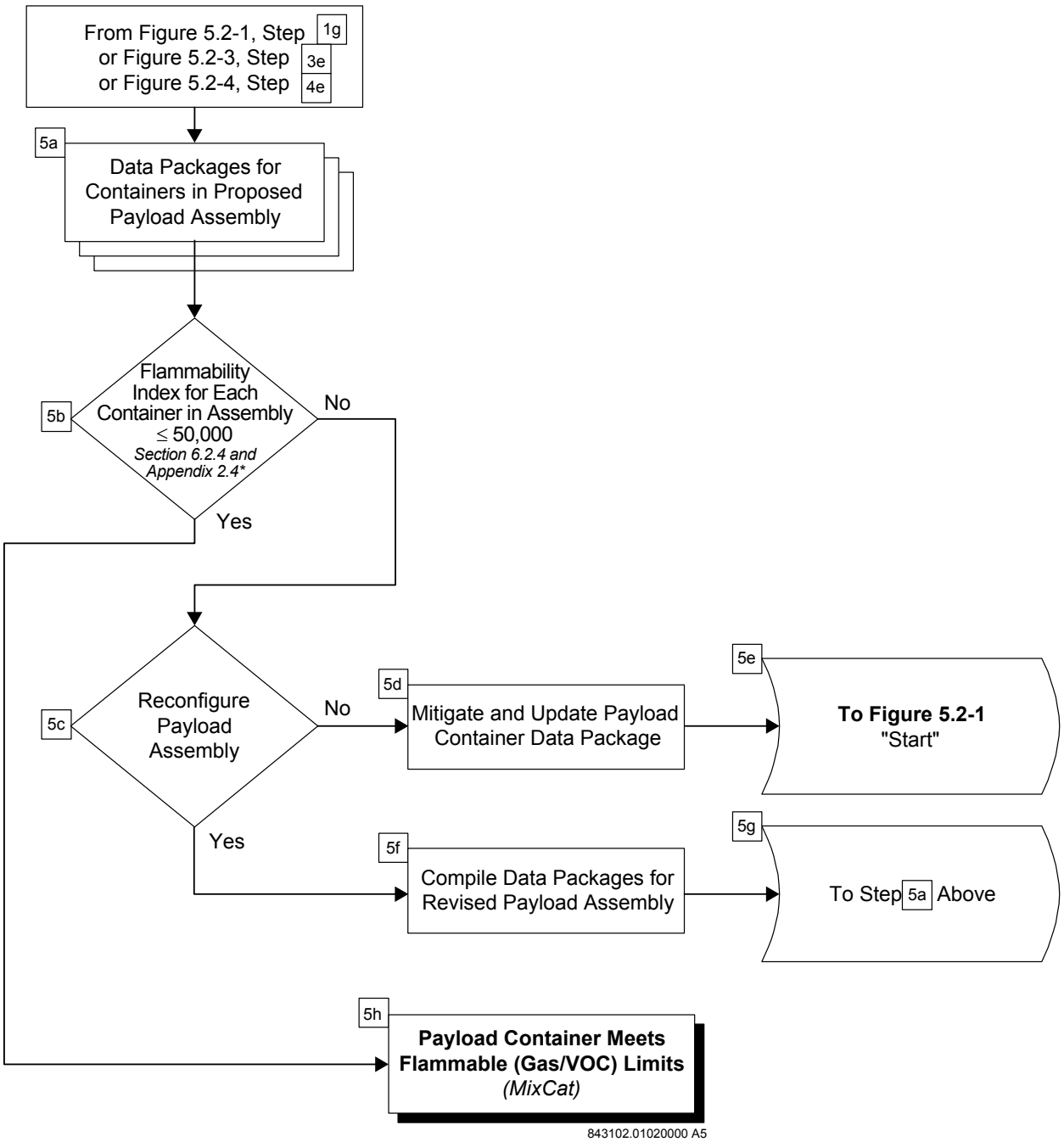

*Note: Referenced Appendix located in the CH-TRU Payload Appendices

Figure 5.2-5 – Logic Diagram for Compliance with Flammable (Gas/VOC) Limits by Mixing of Shipping Categories in a Payload Assembly

5.2.2.1 Analytical Category: Compliance with Flammable (Gas/VOC) Limits

Figure 5.2-1 presents the logic for performing the compliance evaluation for flammable (gas/VOC) limits by analysis, which consists of the following steps:

Step 1a, Payload Container Data Package – The starting point for compliance evaluation by analysis is the payload container data package, which includes all data associated with the payload container. These data are gathered from one or more of the methods of payload compliance listed and defined in Section 1.4 (i.e., visual examination, visual inspection, radiography, records and database information, administrative and procurement controls, sampling programs, and measurement).

Step 1b, Flammable VOCs ≤500 ppm – *Can it be established that the concentration of flammable VOCs present in the headspace of the payload container is ≤500 ppm?* The concentration of flammable VOCs present in the headspace of the payload container is determined based on the information contained in the payload container data package. Data used to make this determination consist of process knowledge (e.g., knowledge of waste generation processes and chemical and material inputs to the process) and may include results from a headspace gas sampling program. A list of flammable VOCs is presented in Section 5.2.4. If a concentration of flammable VOCs in the payload container headspace of less than or equal to 500 ppm cannot be established based on the payload container data package, the compliance evaluation shall proceed to Step 1c, Drum Age Criteria. If it can be determined based on available data that no flammable VOCs are present in the payload container, or if it can be established that the total flammable VOC concentration in the payload container headspace is less than or equal to 500 ppm, the compliance evaluation shall proceed to Step 1d, Waste Type.

> Note: For compliance with the analytical category limit on VOC concentration, VOC absorbing or adsorbing material (such as granular activated carbon to adsorb carbon tetrachloride) may be placed in a payload container provided that site personnel can verify or demonstrate the following through testing, analysis, or knowledge of the process:
>
> 1. The absorbent/adsorbent remains effective in retaining VOCs from the time of waste packaging through the end of the maximum shipping period in the TRUPACT-II or HalfPACT,
> 2. A flammable mixture of gases does not exist in the innermost layer of confinement, and
> 3. The total concentration of potentially flammable VOCs does not exceed 500 ppm in the headspace of a payload container.

Step 1c, Drum Age Criteria – If a payload container headspace concentration of flammable VOCs ≤500 ppm cannot be established based on the payload container data package, the flammable VOC concentration of the payload container headspace must be measured in accordance with the logic presented in Figure 5.2-2 and Section 5.2.2.2, *Drum Age Criteria for Flammable VOC Measurement*.

Step 1d, Waste Type – *What is the waste type assigned to the payload container?* If the payload container under evaluation is classified as Waste Type IV (unknown G value), it belongs in the "Test Category," and the compliance evaluation for flammable (gas/VOC) limits shall proceed to Step 1e, Testing. If the payload container under evaluation is classified as Waste Type I, II, or III, the evaluation shall proceed to Step 1f, All Payload Containers Same Shipping Category.

Step 1e, Testing – If the payload container under evaluation is classified as Waste Type IV, the compliance with flammable (gas/VOC) limits must be evaluated through testing performed in accordance with the logic presented in Figure 5.2-4 and Section 5.2.2.4, *Test Category: Compliance with Flammable (Gas/VOC) Limits by Testing*.

Step 1f, All Payload Containers Same Shipping Category – *Does the payload container proposed belong to the same shipping category as the other containers proposed for payload assembly?* If the payload container is proposed for shipment in a payload assembly comprised of containers of different shipping categories and/or dunnage containers, the compliance evaluation shall proceed to Step 1g, MixCat. If the payload container is proposed for shipment in a payload assembly comprised of payload containers of the same shipping category, the evaluation shall proceed to Step 1h, Decay Heat ≤ Analytical Limit.

Step 1g, MixCat – If the payload container is proposed for shipment with containers of different shipping categories and/or dunnage containers, the compliance evaluation shall proceed as presented in Figure 5.2-5 and Section 5.2.2.5, *Compliance with Flammable (Gas/VOC) Limits by Mixing of Shipping Categories in a Payload Assembly*.

Step 1h, Decay Heat ≤ Analytical Limit – *Does the payload container exceed the analytical decay heat limit?* For applicable payload containers (i.e., Waste Types I, II, or III with flammable VOCs less than or equal to 500 ppm in the headspace and proposed for shipment with containers belonging to the same shipping category), compliance with the analytical decay heat limit may be evaluated. The derivation of decay heat limits for shipping categories is presented in Section 5.2.3. If the payload container exceeds the analytical decay heat limit, the compliance evaluation shall proceed to Step 1i, Measurement. If the payload container meets the decay heat limit, the flammable (gas/VOC) limits are met and the compliance evaluation is complete (see Step 1j, Payload Container Meets Flammable (Gas/VOC) Limits.

Step 1i, Measurement – If a payload container exceeds the analytical decay heat limit, compliance with the flammable (gas/VOC) limits must be evaluated through headspace gas measurement performed in accordance with the logic presented in Figure 5.2-3 and Section 5.2.2.3, *Test Category: Compliance with Flammable (Gas/VOC) Limits by Measurement*.

Step 1j, Payload Container Meets Flammable (Gas/VOC) Limits – All payload containers reaching this step meet the flammable (gas/VOC) limits and are eligible for shipment if all other transportation requirements are satisfied.

5.2.2.2 Drum Age Criteria for Flammable VOC Measurement

If a payload container headspace concentration of flammable VOCs ≤500 ppm cannot be established based on the payload container data package (as determined in Step 1b of Figure 5.2-1), the flammable VOC concentration of the payload container headspace must be measured. Figure 5.2-2 presents the logic for the compliance evaluation for drum age criteria (DAC) and flammable VOC measurement, which consists of the following steps:

Step 2a, Payload Container Meets Drum Age Criteria for Flammable VOC Measurement - *Does the payload container meet the DAC for measurement of headspace flammable VOCs?* The methodology and logic for determining DAC values for payload containers is specified in Appendix 3.9 of the CH-TRU Payload Appendices[1] and Section 5.2.4. If the payload container has not yet met the DAC specified for the applicable packaging configuration, the evaluation shall proceed to Step 2b, Determine Steady-State Headspace Flammable VOC Concentration. If the payload container meets the applicable DAC, the evaluation shall proceed to Step 2c, Flammable VOCs ≤500 ppm.

Step 2b, Determine Steady-State Headspace Flammable VOC Concentration – If the payload container has not yet met the DAC specified for the applicable packaging configuration, the 90-percent steady-state headspace flammable VOC concentration must be determined from the measured concentration as described in Appendix 3.9 of the CH-TRU Payload Appendices.[1] Following the determination of this value, the evaluation shall proceed to Step 2c, Flammable VOCs ≤500 ppm.

Step 2c, Flammable VOCs ≤500 ppm – *Is the headspace flammable VOC concentration less than or equal to 500 ppm?* If the measured or calculated steady-state payload container headspace flammable VOC concentration is less than or equal to 500 ppm (i.e., VOC contribution to flammability is expected to be negligible), the evaluation shall proceed to Step 2f, Update Payload Container Data Package. If the steady-state payload container headspace flammable VOC concentration exceeds 500 ppm, the evaluation shall proceed to Step 2d, Apply Prediction Factors to Determine Flammable VOC Concentration in Inner Confinement Layer and Update Payload Container Data Package.

Step 2d, Apply Prediction Factors to Determine Flammable VOC Concentration in Inner Confinement Layer and Update Payload Container Data Package – If the steady-state payload container headspace flammable VOC concentration exceeds 500 ppm, the payload container belongs in the test category. Prediction factors shall be applied, as described in Appendix 3.9 of the CH-TRU Payload Appendices[1], to determine flammable VOC concentration in the innermost confinement layer. Following the application of the prediction factors, the payload container data package shall be updated and the evaluation shall proceed to Step 2e, Measurement.

Step 2e, Measurement – If a payload container headspace flammable VOC concentration exceeds 500 ppm and the prediction factor has been applied to determine the flammable VOC concentration in the innermost confinement layer, compliance with the flammable (gas/VOC) limits must be evaluated through headspace gas measurement performed in accordance with the logic presented in Figure 5.2-3 and Section 5.2.2.3, *Test Category: Compliance with Flammable (Gas/VOC) Limits by Measurement*.

Step 2f, Update Payload Container Data Package – If the measured or calculated steady-state payload container headspace flammable VOC concentration is less than or equal to 500 ppm, the data package for the payload container shall be updated, and the compliance evaluation shall proceed to Step 2g, "Start."

Step 2g, "Start" – Following the documentation of the payload container headspace flammable VOC concentration of less than or equal to 500 ppm, the compliance evaluation shall start again as described in Figure 5.2-1 and Section 5.2.2.1, *Analytical Category: Compliance with Flammable (Gas/VOC) Limits*.

5.2.2.3 Test Category: Compliance with Flammable (Gas/VOC) Limits by Measurement

If the payload container under evaluation exceeds the analytical decay heat limit (as determined in Step 1h of Figure 5.2-1) or if the concentration of flammable VOCs in the payload container headspace exceeds 500 ppm (as determined in Step 2c of Figure 5.2-2), the container belongs in the test category. One option under the test category consists of evaluation based on measurement of the payload container headspace flammable (gas/VOC) concentration. Figure 5.2-3 presents the logic for performing the compliance evaluation for flammable (gas/VOC) limits by measurement, which consists of the following steps:

Step 3a, CH_4 ≤1,250 ppm – *Is the payload container headspace methane concentration less than or equal to 1,250 ppm?* The concentration of methane present in the headspace of the payload container must be measured in accordance with the headspace measurement methods discussed in Section 5.2.5. If the payload container headspace methane concentration exceeds 1,250 ppm, the payload container cannot be approved for shipment in its current condition. Mitigation measures must be taken under Step 3b, Mitigate and Update Payload Container Data Package. If the payload container headspace methane concentration is less than or equal to 1,250 ppm (ensuring that methane contribution to flammability is negligible), the compliance evaluation shall proceed to Step 3d, All Payload Containers Same Shipping Category.

Step 3b, Mitigate and Update Payload Container Data Package – If the payload container headspace methane concentration exceeds 1,250 ppm, the payload container is not eligible for shipment and must be segregated for repackaging, treatment, or other mitigation measures. Following the completion of mitigation measures, the compliance evaluation shall proceed to Step 3c, "Start."

Step 3c, "Start" – Following the completion and documentation of mitigation measures to ensure that the payload container headspace methane concentration is less than or equal to 1,250 ppm, the compliance evaluation shall start again as described in Figure 5.2-1 and Section 5.2.2.1, *Analytical Category: Compliance with Flammable (Gas/VOC) Limits*.

Step 3d, All Payload Containers Same Shipping Category – *Does the payload container proposed belong to the same shipping category as the other containers proposed for payload assembly?* If the payload container is proposed for shipment in a payload assembly comprised of containers of different shipping categories and/or dunnage containers, the compliance evaluation shall proceed to Step 3e, MixCat. If the payload container is proposed for shipment in a

payload assembly comprised of payload containers of the same shipping category, the evaluation shall proceed to Step 3f, Flammable (Gas/VOC) Concentration ≤ Limit.

Step 3e, MixCat – If the payload container is proposed for shipment with containers of different shipping categories and/or dunnage containers, the compliance evaluation shall proceed as presented in Figure 5.2-5 and Section 5.2.2.5, *Compliance with Flammable (Gas/VOC) Limits by Mixing of Shipping Categories in a Payload Assembly*.

Step 3f, Flammable (Gas/VOC) Concentration ≤ Limit – *Is the sum of the flammable (gas/VOC) concentrations less than or equal to the mixture lower explosive limit (MLEL)?* If the payload container is proposed for shipment in a payload assembly comprised of payload containers of the same shipping category, the flammable (gas/VOC) concentration within the innermost layer of confinement must be determined using the measured headspace flammable (gas/VOC) concentrations and the time history of the payload container, as described in Section 5.2.5 and Appendix 3.10 of the CH-TRU Payload Appendices.[1] A specific MLEL shall be calculated for the payload container, as described in Section 5.2.5. If the sum of the flammable (gas/VOC) concentrations in the innermost layer of confinement exceeds the MLEL, the compliance evaluation shall proceed to Step 3g, Testing. If the sum of the flammable (gas/VOC) concentrations in the innermost layer of confinement is less than or equal to the MLEL, the flammable (gas/VOC) limits are met and the compliance evaluation is complete (see Step 3h, Payload Container Meets Flammable (Gas/VOC) Limits).

Step 3g, Testing – If the sum of the flammable (gas/VOC) concentration in the innermost layer of confinement exceeds the MLEL, the compliance with flammable (gas/VOC) limits must be evaluated through testing performed in accordance with the logic presented in Figure 5.2-4 and Section 5.2.2.4, *Test Category: Compliance with Flammable (Gas/VOC) Limits by Testing*.

Step 3h, Payload Container Meets Flammable (Gas/VOC) Limits – All payload containers reaching this step meet the flammable (gas/VOC) limits and are eligible for shipment if all other transportation requirements are satisfied.

5.2.2.4 Test Category: Compliance with Flammable (Gas/VOC) Limits by Testing

If the payload container under evaluation belongs to Waste Type IV (as determined in Step 1d of Figure 5.2-1) or if the flammable (gas/VOC) concentrations exceed the MLEL (as determined in Step 3f of Figure 5.2-3), the container belongs in the test category, and compliance with flammable (gas/VOC) limits must be evaluated by testing.

Figure 5.2-4 presents the logic for performing the compliance evaluation for flammable (gas/VOC) limits by testing, which consists of the following steps:

Step 4a, CH_4 ≤1,250 ppm – *Is the payload container headspace methane concentration less than or equal to 1,250 ppm?* The concentration of methane present in the headspace of the payload container must be measured in accordance with the headspace measurement methods discussed in Section 5.2.5. If the payload container headspace methane concentration exceeds 1,250 ppm, the payload container cannot be approved for shipment in its current condition. Mitigation measures must be taken under Step 4b, Mitigate and Update Payload Container Data Package. If the payload container headspace methane concentration is less than or equal to

1,250 ppm (ensuring that methane contribution to flammability is negligible), the compliance evaluation shall proceed to Step 4d, All Payload Containers Same Shipping Category.

Step 4b, Mitigate and Update Payload Container Data Package – If the payload container headspace methane concentration exceeds 1,250 ppm, the payload container is not eligible for shipment and must be segregated for repackaging, treatment, or other mitigation measures. Following the completion of mitigation measures, the compliance evaluation shall proceed to Step 4c, "Start."

Step 4c, "Start" – Following the completion and documentation of mitigation measures to ensure that the payload container headspace methane concentration is less than or equal to 1,250 ppm, the compliance evaluation shall start again as described in Figure 5.2-1 and Section 5.2.2.1, *Analytical Category: Compliance with Flammable (Gas/VOC) Limits*.

Step 4d, All Payload Containers Same Shipping Category – *Does the payload container proposed belong to the same shipping category as the other containers proposed for payload assembly?* If the payload container is proposed for shipment in a payload assembly comprised of containers of different shipping categories and/or dunnage containers, the compliance evaluation shall proceed to Step 4e, MixCat. If the payload container is proposed for shipment in a payload assembly comprised of payload containers of the same shipping category, the evaluation shall proceed to Step 4f, Flammable (Gas/VOC) Concentration ≤ Limit.

Step 4e, MixCat – If the payload container is proposed for shipment with containers of different shipping categories and/or dunnage containers, the compliance evaluation shall proceed as presented in Figure 5.2-5 and Section 5.2.2.5, *Compliance with Flammable (Gas/VOC) Limits by Mixing of Shipping Categories in a Payload Assembly*.

Step 4f, Flammable (Gas/VOC) Concentration ≤ Limits – *Is the sum of flammable (gas/VOC) concentrations less than or equal to the MLEL?* The flammable gas concentration within the innermost layer of confinement of the container must be determined using the data from the testing, as described in Section 5.2.5 and Appendix 3.10 of the CH-TRU Payload Appendices.[1] A specific MLEL must be calculated for the container, as described in Section 5.2.5. If the sum of the flammable gas and VOC concentrations exceeds the MLEL, the container does not comply with flammable (gas/VOC) limits. Mitigation measures must then be taken under Step 4g, Mitigate and Update Payload Container Data Package. If the flammable (gas/VOC) concentration is less than or equal to the MLEL, the flammable (gas/VOC) limits are met, and the compliance evaluation is complete (see Step 4i, Payload Container Meets Flammable (Gas/VOC) Limits).

Step 4g, Mitigate and Update Payload Container Data Package – If the flammable (gas/VOC) concentration determined from the testing exceeds the MLEL, the container is not eligible for shipment and must be segregated for repackaging, treatment, or other mitigation measures. Following the completion of mitigation measures, the compliance evaluation shall proceed to Step 4h, "Start."

Step 4h, "Start" – Following the completion and documentation of mitigation measures, the compliance evaluation shall start again as described in Figure 5.2-1 and Section 5.2.2.1, *Analytical Category: Compliance with Flammable (Gas/VOC) Limits*.

Step 4i, Payload Container Meets Flammable (Gas/VOC) Limits – All containers reaching this step meet the flammable (gas/VOC) limits and are eligible for shipment if all other transportation requirements are satisfied.

5.2.2.5 Compliance with Flammable (Gas/VOC) Limits by Mixing of Shipping Categories in a Payload Assembly

If the payload container under evaluation is proposed for shipment with containers of different shipping categories and/or dunnage containers (as determined in Step 1f of Figure 5.2-1, Step 3d of Figure 5.2-3, or Step 4d of Figure 5.2-4), the compliance with flammable (gas/VOC) limits must be evaluated for each container in the payload assembly. This method accounts for the use of dunnage containers to assemble the payload.

Figure 5.2-5 presents the logic for performing the compliance evaluation for flammable (gas/VOC) limits for the use of mixing of shipping categories in a payload assembly, which consists of the following steps:

Step 5a, Data Packages for Containers in Proposed Payload Assembly – The starting point for compliance evaluation for mixing of shipping categories in a payload assembly is the data packages for all payload containers proposed for inclusion in the payload.

Step 5b, Flammability Index for Each Container in Assembly ≤50,000 – *Is the flammability index (FI) for each container proposed for inclusion in the payload assembly a non-negative number ≤50,000?* For each payload container, an FI must be calculated as the ratio of the actual flammable gas generation rate to the allowable flammable gas generation rate limit multiplied by 50,000. Appendix 2.4 of the CH-TRU Payload Appendices[1] describes the methodology for determining the FI for payload assemblies with mixed shipping categories. If the FI for any payload container is a negative number or exceeds 50,000, the compliance evaluation shall proceed to Step 5c, Reconfigure Payload Assembly. If the FI for each payload container in the payload assembly is a non-negative number less than or equal to 50,000, the flammable (gas/VOC) limits are met and the compliance evaluation is complete (see Step 5h, Payload Container Meets Flammable (Gas/VOC) Limits).

Step 5c, Reconfigure Payload Assembly – *Can the payload assembly be reconfigured by proposing a different combination of payload containers?* If the proposed payload assembly cannot be reconfigured, compliance with the flammable (gas/VOC) limits cannot be met for the proposed payload assembly. Mitigation measures must be taken under Step 5d, Mitigate and Update Payload Container Data Package. If the proposed payload assembly can be reconfigured with a different assembly of containers, the compliance evaluation shall proceed to Step 5f, Compile Data Packages for Revised Payload Assembly.

Step 5d, Mitigate and Update Payload Container Data Package – If the payload assembly cannot be reconfigured, the payload is not eligible for shipment and the payload containers exceeding the FI in the proposed payload assembly must be segregated for repackaging, treatment, or other mitigation measures. Following the completion of mitigation measures, the compliance evaluation shall proceed to Step 5e, "Start."

Step 5e, "Start" – Following the completion and documentation of mitigation measures, the compliance evaluation shall start again as described in Figure 5.2-1 and Section 5.2.2.1, *Analytical Category: Compliance with Flammable (Gas/VOC) Limits*.

Step 5f, Compile Data Packages for Revised Payload Assembly – Following the compilation of the data packages for payload containers comprising the reconfigured payload assembly, the compliance evaluation shall proceed to Step 5g, To Step 5a Above.

Step 5g, To Step 5a Above – The evaluation of the reconfigured payload assembly shall start again under Step 5a, Data Packages for Containers in Proposed Payload Assembly.

Step 5h, Payload Container Meets Flammable (Gas/VOC) Limits – All payload assemblies reaching this step meet the flammable (gas/VOC) limits and are eligible for shipment if all other transportation requirements are satisfied.

5.2.3 Hydrogen Gas Generation Rate and Decay Heat Limits for Analytical Category

The maximum allowable hydrogen gas generation rate limit and decay heat limit, which will limit the concentration of hydrogen gas within any layer of confinement to less than or equal to 5% by volume, may be determined for alpha-numeric and numeric shipping categories. Appendix 2.3 of the CH-TRU Payload Appendices[1] presents the methodology used for deriving the limits for alpha-numeric shipping categories and the derivations of the formulas used to calculate the limits for numeric shipping categories. Appendix 6.9 of the CH-TRU Payload Appendices[1] describes the temperature dependence of hydrogen gas generation and release rates. Appendix 6.10 of the CH-TRU Payload Appendices[1] documents the effect on decay heat limits of overpacking containers.

Table 5.2-1 lists the limits for approved alpha-numeric shipping categories.

For numeric shipping categories that do not have a corresponding alpha-numeric shipping category listed in Table 5.2-1, the procedure for determining limits is presented here. The method for calculating the decay heat limit and gas generation limit for numeric shipping categories is simple and conservative to provide a direct correlation between shipping category and the limits.

The numeric shipping category notation (as described in Appendix 2.1 of the CH-TRU Payload Appendices[1]) is in the form of XX YYYY ZZZZ, where XX represents the waste type, YYYY represents the G value (multiplied by 100), and ZZZZ represents the total resistance, R_T, (divided by 10,000 and rounded up). The hydrogen gas generation rate limit per innermost layer of confinement, CG, and the decay heat limit per innermost layer of confinement, Q_i, are determined by the following equations:

$$CG = \frac{0.05}{(ZZZZ * 10{,}000)\frac{\text{sec}}{\text{mole}}}$$

and

$$Q_i = \frac{(4824.42)\,\dfrac{\text{molecules}}{\text{mole}} * \dfrac{\text{watt} * \text{sec}}{\text{eV}}}{(\text{ZZZZ} * \text{YYYY})\,\dfrac{\text{sec} * \text{molecules}}{\text{mole} * \text{eV}}}$$

For example, for shipping category 10 0040 0160, substituting 0040 for YYYY and 0160 for ZZZZ yields:

$$CG = \frac{0.05}{(0160 * 10{,}000)\,\dfrac{\text{sec}}{\text{mole}}} = 3.125 \text{ x } 10^{-8} \text{ mole/sec}$$

$$Q_i = \frac{(4824.42)\,\dfrac{\text{molecules}}{\text{mole}} * \dfrac{\text{watt} * \text{sec}}{\text{eV}}}{(0160 * 0040)\,\dfrac{\text{sec} * \text{molecules}}{\text{mole} * \text{eV}}} = 0.7538 \text{ watts}$$

Table 5.2-1 – List of Approved Alpha-numeric Shipping Categories, Maximum Allowable Hydrogen Gas Generation Rates, and Maximum Allowable Wattages

Numeric Payload Shipping Category	Alpha-numeric Payload Shipping Category	Maximum Allowable Hydrogen Gas Generation Rate (moles/sec)	Maximum Allowable Wattage (watts)
10 0040 0034	I.3C0	1.514E-07	3.6528
10 0040 0147	I.3A0	3.416E-08	0.8241
10 0040 0168	I.3A1	2.980E-08	0.7189
10 0040 0190	I.3A2	2.643E-08	0.6375
10 0040 0207	I.3B0	2.416E-08	0.5827
10 0040 0229	I.3B1	2.189E-08	0.5281
10 0040 0250	I.3B2	2.002E-08	0.4828
10 0040 0648	I.3A3	7.721E-09	0.1863
10 0040 0709	I.3B3	7.061E-09	0.1703
10 0040 0888	I.3A4	5.634E-09	0.1359
10 0040 0949	I.3B4	5.274E-09	0.1272
10 0130 0034	I.2C0	1.514E-07	1.1240
10 0130 0147	I.2A0	3.416E-08	0.2536
10 0130 0168	I.2A1	2.980E-08	0.2212
10 0130 0190	I.2A2	2.643E-08	0.1962
10 0130 0207	I.2B0	2.416E-08	0.1793
10 0130 0229	I.2B1	2.189E-08	0.1625
10 0130 0250	I.2B2	2.002E-08	0.1486
10 0130 0648	I.2A3	7.721E-09	0.0573
10 0130 0709	I.2B3	7.061E-09	0.0524
10 0130 0888	I.2A4	5.634E-09	0.0418
10 0130 0949	I.2B4	5.274E-09	0.0391
10 0160 0034	I.1C0	1.514E-07	0.9132
10 0160 0059	I.1C2	8.598E-08	0.5185
10 0160 0147	I.1A0	3.416E-08	0.2060

Numeric Payload Shipping Category	Alpha-numeric Payload Shipping Category	Maximum Allowable Hydrogen Gas Generation Rate (moles/sec)	Maximum Allowable Wattage (watts)
10 0160 0168	I.1A1	2.980E-08	0.1797
10 0160 0190	I.1A2	2.643E-08	0.1594
10 0160 0207	I.1B0	2.416E-08	0.1457
10 0160 0229	I.1B1	2.189E-08	0.1320
10 0160 0250	I.1B2	2.002E-08	0.1207
10 0160 0286	I.1C2b	1.751E-08	0.1056
10 0160 0648	I.1A3	7.721E-09	0.0466
10 0160 0709	I.1B3	7.061E-09	0.0426
20 0000 0000	II.2AM	NA①	40.0000
20 0000 0000	II.2BM	NA①	40.0000
20 0000 0000	II.2CM	NA①	40.0000
20 0000 0000	II.2E0	NA①	40.0000
20 0170 0028	II.1C0	1.798E-07	1.0206
20 0170 0034	II.1C1f	1.501E-07	0.8518
20 0170 0039	II.1C2f	1.288E-07	0.7309
20 0170 0041	II.1C1	1.238E-07	0.7029
20 0170 0043	II.1C2bf	1.173E-07	0.6659
20 0170 0049	II.1C3f	1.039E-07	0.5897
20 0170 0053	II.1C2	9.445E-08	0.5361
20 0170 0067	II.1D2	7.524E-08	0.4271
20 0170 0127	II.1A0	3.966E-08	0.2251
20 0170 0133	II.1A1f	3.765E-08	0.2137
20 0170 0140	II.1A2af	3.584E-08	0.2034
20 0170 0143	II.1A2f	3.519E-08	0.1997
20 0170 0148	II.1A1	3.391E-08	0.1924
20 0170 0152	II.1A3f	3.303E-08	0.1875
20 0170 0166	II.1B0	3.015E-08	0.1711
20 0170 0169	II.1A2a	2.961E-08	0.1680
20 0170 0188	II.1B1	2.670E-08	0.1516

Numeric Payload Shipping Category	Alpha-numeric Payload Shipping Category	Maximum Allowable Hydrogen Gas Generation Rate (moles/sec)	Maximum Allowable Wattage (watts)
20 0170 0209	II.1B2a	2.396E-08	0.1360
20 0170 0220	II.1C2b	2.277E-08	0.1292
20 0170 0233	II.1C3	2.154E-08	0.1222
20 0170 0327	II.1A2	1.531E-08	0.0869
20 0170 0367	II.1B2	1.364E-08	0.0774
20 0170 0412	II.1C4	1.215E-08	0.0690
20 0170 0506	II.1A3	9.883E-09	0.0561
20 0170 0546	II.1B3	9.163E-09	0.0520
20 0170 0686	II.1A4	7.298E-09	0.0414
20 0170 0725	II.1B4	6.898E-09	0.0392
20 0170 0865	II.1A5	5.785E-09	0.0328
20 0170 0905	II.1B5	5.530E-09	0.0314
20 0170 1044	II.1A6	4.791E-09	0.0272
20 0170 1084	II.1B6	4.616E-09	0.0262
30 0340 0028	III.1C0	1.798E-07	0.5103
30 0340 0034	III.1C1f	1.501E-07	0.4259
30 0340 0039	III.1C2f	1.288E-07	0.3655
30 0340 0041	III.1C1	1.238E-07	0.3515
30 0340 0043	III.1C2bf	1.173E-07	0.3329
30 0340 0049	III.1C3f	1.039E-07	0.2948
30 0340 0053	III.1C2	9.445E-08	0.2680
30 0340 0067	III.1D2	7.524E-08	0.2135
30 0340 0127	III.1A0	3.966E-08	0.1126
30 0340 0133	III.1A1f	3.765E-08	0.1069
30 0340 0140	III.1A2af	3.584E-08	0.1017
30 0340 0143	III.1A2f	3.519E-08	0.0999
30 0340 0148	III.1A1	3.391E-08	0.0962
30 0340 0152	III.1A3f	3.303E-08	0.0937
30 0340 0166	III.1B0	3.015E-08	0.0856
30 0340 0169	III.1A2a	2.961E-08	0.0840

Numeric Payload Shipping Category	Alpha-numeric Payload Shipping Category	Maximum Allowable Hydrogen Gas Generation Rate (moles/sec)	Maximum Allowable Wattage (watts)
30 0340 0188	III.1B1	2.670E-08	0.0758
30 0340 0209	III.1B2a	2.396E-08	0.0680
30 0340 0220	III.1C2b	2.277E-08	0.0646
30 0340 0233	III.1C3	2.154E-08	0.0611
30 0340 0327	III.1A2	1.531E-08	0.0434
30 0340 0367	III.1B2	1.364E-08	0.0387
30 0340 0412	III.1C4	1.215E-08	0.0345
30 0340 0506	III.1A3	9.883E-09	0.0280
30 0340 0546	III.1B3	9.163E-09	0.0260
30 0340 0686	III.1A4	7.298E-09	0.0207
30 0340 0725	III.1B4	6.898E-09	0.0196
30 0340 0865	III.1A5	5.785E-09	0.0164
30 0340 0905	III.1B5	5.530E-09	0.0157
30 0340 1044	III.1A6	4.791E-09	0.0136
30 0340 1084	III.1B6	4.616E-09	0.0131
40 9999 0127	IV.1A0T	3.937E-08	7.0000
40 9999 0148	IV.1A1T	3.378E-08	7.0000
40 9999 0169	IV.1A2T	2.959E-08	7.0000
40 9999 0188	IV.1B1T	2.660E-08	7.0000
40 9999 0209	IV.1B2T	2.392E-08	7.0000
40 9999 0506	IV.1A3T	9.881E-09	7.0000
40 9999 0546	IV.1B3T	9.158E-09	7.0000

Note:

① NA = Not applicable.

5.2.4 Drum Age Criteria

5.2.4.1 Introduction

If a concentration of flammable VOCs in the payload container headspace of less than or equal to 500 ppm cannot be established based on waste generation procedures or records of process knowledge, headspace gas sampling for flammable VOCs is required. Prior to performing headspace sampling, DACs need to be met for headspace samples to be valid. DACs are estimates of time required for VOCs in a payload container to reach 90 percent of the equilibrium steady-state concentration within the different layers of confinement. Alternately, the headspace sample taken before the DAC has been met can be used to determine the 90% steady-state concentration in a waste container. The 90% steady-state concentration can then be correlated to the VOC concentration in the innermost layer of confinement by the use of prediction factors (PFs), which are multipliers to be applied to the headspace concentration. The methodology used for determining the steady-state (90%) VOC concentration from DACs (or measurement) and PFs is based on Liekhus et al., October 2000.[2] Three options are available:

Option 1 **No DACs Required.** If the concentration of flammable VOCs in a payload container can be shown to be less than or equal to 500 ppm from the waste generation procedures or records of process knowledge, then no DACs or PFs are required. If the concentration of flammable VOCs cannot be determined from the waste generation procedures or the records of process knowledge, headspace sampling must be performed and Option 2 or Option 3 below must be used.

Option 2 **Assignment of DACs for Common Packaging Configurations.** DACs for common representative packaging configurations used for CH-TRU waste at the sites are presented in look-up tables. Under Option 2, there are three container venting and sampling scenarios. Option 2 and the associated scenarios and look-up tables are discussed in detail in Section 5.2.4.2.

Option 3 **Calculation of Steady-State VOC Concentrations for Specific Packaging Configurations.** For specific packaging configurations not covered by Option 2, the steady-state VOC concentration can be determined based on sampling (measurement) using the methodology described in Liekhus et al., October 2000.[2] Option 3 is described in Appendix 3.9 of the CH-TRU Payload Appendices.[1]

Figure 5.2-6 presents a flowchart for determining the appropriate option. A list of flammable VOCs identified by the sites in CH-TRU waste is provided as Table 5.2-2. If additional flammable VOCs (i.e., not listed in Table 5.2-2) are identified in concentrations greater than 500 ppm total, Section 5.2.5.3.2 specifies a formalized process for including these VOCs in the analysis for compliance with the flammable (gas/VOC) limits.

[2] Liekhus, K.J., S.M. Djordjevic, M. Devarakonda, M.J. Connolly, October 2000, *Determination of Drum Age Criteria and Prediction Factors Based on Packaging Configurations*, INEEL/EXT-2000-01207, Idaho National Engineering and Environmental Laboratory, Idaho Falls, Idaho.

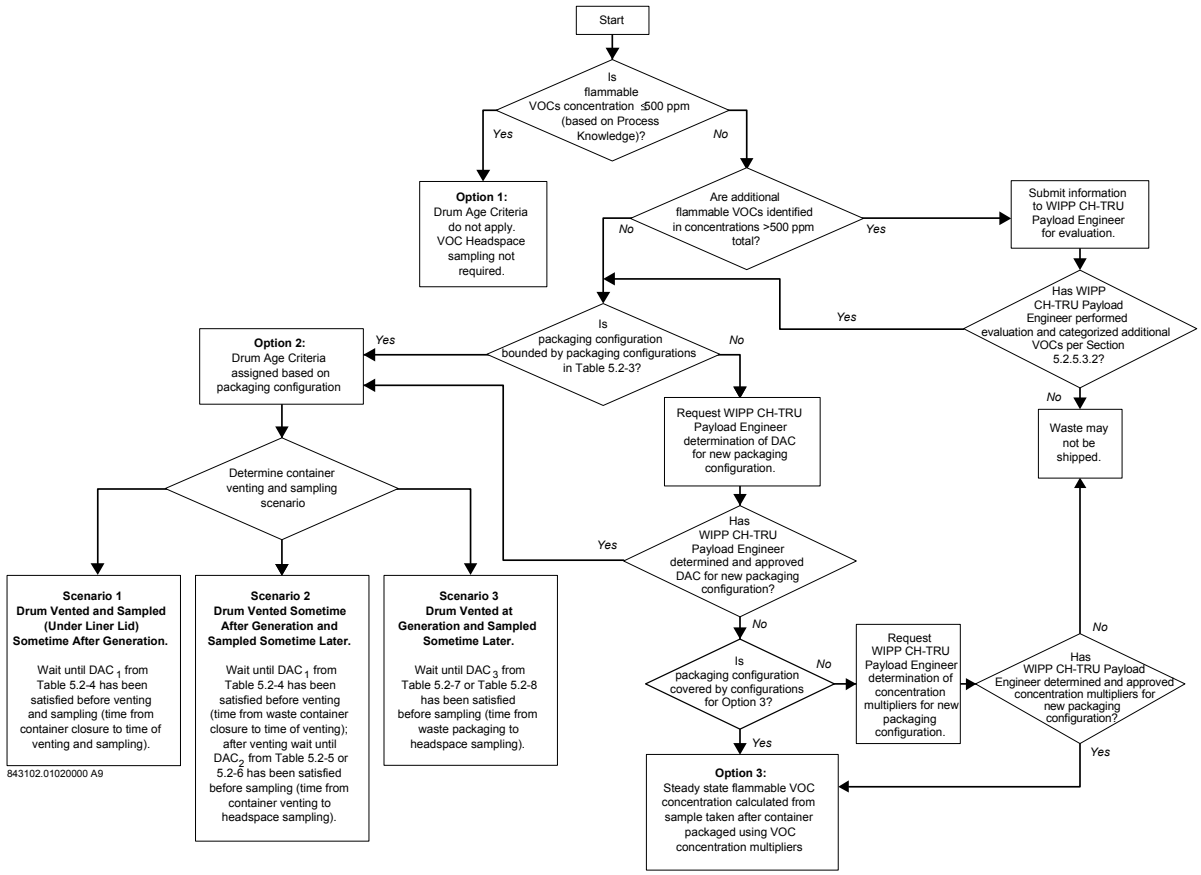

Figure 5.2-6 – Determination of DAC Option

Table 5.2-2 – List of Flammable Volatile Organic Compounds Identified by Sites in CH-TRU Wastes①

Acetone
Benzene
1-Butanol
Chlorobenzene
Cyclohexane
1,1-Dichloroethane
1,2-Dichloroethane
1,1-Dichloroethene
cis-1,2-Dichloroethene
Ethyl benzene
Ethyl ether
Methanol
Methyl ethyl ketone
Methyl isobutyl ketone
Toluene
1,2,4-Trimethylbenzene
1,3,5-Trimethylbenzene
Xylenes

Note:

① If additional flammable VOCs are identified in concentrations greater than 500 ppm total, the methodology documented in Section 5.2.5.3.2 shall be used.

5.2.4.2 Assignment of DACs for Common Packaging Configurations

The derivation of the DACs for Option 2 is based on specific packaging configurations and waste types commonly used at the TRU waste sites. Considering only the number of layers of confinement, the common packaging configurations currently described in the CH-TRUCON document[3] can be bound by the packaging configurations presented in Table 5.2-3.

For example, a packaging configuration consisting of a single plastic bag in a 55-gallon drum for Waste Type II or III could be conservatively placed into Configuration 2 (i.e., the DAC for a packaging configuration consisting of 1 inner bag would be less than or equal to that for 3 inner bags and 1 liner bag). Similarly, a configuration of 2 inner bags and 2 liner bags in a 55-gallon drum for these waste types would be assigned to Configuration 3. In addition, filtered bag layers are also conservatively assigned to the configurations in Table 5.2-3. For example, a

[3] U.S. Department of Energy (DOE), *CH-TRU Waste Content Codes (CH-TRUCON)*, current revision, DOE/WIPP 01-3194, U.S. Department of Energy, Carlsbad Field Office, Carlsbad, New Mexico.

configuration of Waste Type II with 3 filtered inner bags and 1 filtered liner bag in a 55-gallon drum is bounded by Packaging Configuration 2.

Table 5.2-3 – Common CH-TRU Waste Packaging Configurations

Packaging Configuration	Waste Types II and III	Waste Types I and IV
Packaging Configuration 1 (55-gallon drums)	No inner bags, no liner bags	
Packaging Configuration 2 (55-gallon drums)	Up to 4 bag layers, up to 1 of which is a liner bag	Any configuration with 1 liner bag
Packaging Configuration 3 (55-gallon drums)	Up to 6 bag layers, up to 2 of which are liner bags	Any configuration with 2 liner bags
Packaging Configuration 4 (pipe components)	Up to 2 inner bags and 1 filtered metal can inside a pipe component (headspace sample taken inside the pipe component)	
Packaging Configuration 5 (SWBs and TDOPs)	SWB or TDOP with up to 1 bag layer (inner or liner)	
Packaging Configuration 6 (SWBs and TDOPs)	SWB or TDOP with up to 6 bag layers, up to 1 of which is a liner bag	
Packaging Configuration 7 (85- and 100-gallon drums)	85-gallon or 100-gallon drum with filtered inner lid (no inner or liner bags and no rigid liners)	

For Waste Types I and IV in 55-gallon drums, one or two liner bags are the configurations most commonly used. The DAC analysis conservatively assumes for solidified wastes that only the top of the liner bag is available for VOC transport. The presence of inner bags makes the entire liner bag area available and hence the DACs are bound by the configurations in Table 5.2-3.[2]

Any site requiring the transportation of TRU waste in the TRUPACT-II or HalfPACT that cannot be covered under a packaging configuration included in Table 5.2-3 must request the determination of an appropriate DAC by submitting a request in writing to the WIPP CH-TRU Payload Engineer.

The WIPP CH-TRU Payload Engineer shall assign a conservative DAC for a packaging configuration not covered under Table 5.2-3 using the governing equations and methodology.[2,4] Compliance with all other transportation requirements of the CH-TRAMPAC document shall also be demonstrated. The WIPP CH-TRU Payload Engineer does not have the authority to change the transportation requirements for the TRUPACT-II or the HalfPACT as specified in the CH-TRAMPAC document without approval from the NRC. Section 1.5 describes the process for WIPP CH-TRU Payload Engineer approval of new packaging configurations as part of the TRUCON code approval process.

[4] Connolly, M.J., S.M. Djordjevic, K.J. Liekhus, C.A. Loehr, L.R. Spangler, June 1998, *Position for Determining Gas Phase Volatile Organic Compound Concentrations in Transuranic Waste Containers*, INEEL-95/0109, Rev. 2, Idaho National Engineering and Environmental Laboratory, Idaho Falls, Idaho.

DACs are defined for three unique venting and sampling scenarios. These venting and sampling scenarios are defined by the time elapsed after container closure and venting, as follows:

t_1 = time (days) elapsed after container closure until venting

t_2 = time (days) elapsed after venting.

Scenario 1: The drum liner headspace (under liner lid) can be sampled at the time of venting if t_1 is greater than DAC_1. The drum age criterion DAC_1 is defined as the time for a representative VOC to reach a concentration of at least 90% of its equilibrium concentration before drum venting. Table 5.2-4 presents the DAC_1 values.

Table 5.2-4 – DAC_1 Values (in Days)

Waste Type	DAC_1 (days)
Waste Types I and IV	127
Waste Types II and III	53

Scenario 2: For drums generated in an unvented condition and subsequently vented, the drum headspace can be sampled in a vented drum if t_1 is greater than DAC_1 and t_2 is greater than DAC_2.

The drum age criterion DAC_2 is defined as the time for a representative VOC to reach a headspace concentration of at least 90% of its steady-state concentration after venting a waste drum that was unvented for at least DAC_1. DAC_2 values are calculated for the two categories of waste types under Scenario 1 with four different opening sizes in the punctured drum liner lid and three different drum filter diffusivities.

In other words, under this scenario, if the drum has remained in an unvented condition for a period of at least 53 days for Waste Types II and III and 127 days for Waste Types I and IV, equilibration of VOCs is complete inside the drum. When the drum is subsequently vented, a time period for the appropriate DAC_2 listed in Table 5.2-5 or Table 5.2-6 is needed before sampling to ensure reequilibration between the liner and the drum headspace.

Table 5.2-5 – Packaging-Specific DAC_2 Values (in Days) for Solidified Waste (Waste Types I and IV)

Drum Filter Minimum Hydrogen Diffusivity (m/s/mf)①	Liner Lid Opening			
	0.3-inch Diameter Hole	0.375-inch Diameter Hole	0.75-inch Diameter Hole	1-inch Diameter Hole
1.9×10^{-6}	36	30	23	22
3.7×10^{-6}	30	25	19	18
3.7×10^{-5}	13	11	11	11

Note:

① m/s/mf = mole per second per mole fraction.

Table 5.2-6 – Packaging-Specific DAC_2 Values (in Days) for Solid Waste (Waste Types II and III)

Drum Filter Minimum Hydrogen Diffusivity (m/s/mf)①	Liner Lid Opening			
	0.3-inch Diameter Hole	0.375-inch Diameter Hole	0.75-inch Diameter Hole	1-inch Diameter Hole
1.9×10^{-6}	29	22	13	12
3.7×10^{-6}	25	20	12	11
3.7×10^{-5}	7	6	6	4

Note:

① m/s/mf = mole per second per mole fraction.

Scenario 3: If t_1 is less than DAC_1 when the container is vented, the container headspace can be sampled when t_2 is greater than DAC_3. Also, for newly generated payload containers that were vented at the time of generation, the container headspace can be sampled after DAC_3 has been exceeded.

The drum age criterion DAC_3 is defined as the time for a representative VOC to reach a headspace concentration of at least 90% of its steady-state concentration. DAC_3 values are calculated for the two categories of waste types each with different packaging configurations, different opening sizes in the drum liner lid as well as the case of no rigid liner inside the drum, and different filter diffusivities. The appropriate DAC_3 values are listed in Table 5.2-7 and Table 5.2-8.

Because direct load TDOPs are equipped with a greater number of filters than SWBs, the SWB packaging configurations (Packaging Configurations 5 and 6) bound the direct load TDOP packaging configurations. Packaging Configuration 6 also includes bin overpack configurations with the headspace sample taken inside the bin.

Packaging Configuration 7 describes 85- and 100-gallon drums with a vented inner lid and no additional inner layers of confinement and no rigid liners. Sampling is performed between the inner and outer lids or inside the inner lid. The DAC values for an 85- or 100-gallon drum with no additional inner layers of confinement and no rigid liner are listed in Table 5.2-7 and Table 5.2-8. If a 100-gallon drum contains a compacted 55-gallon drum containing a rigid drum liner, the 55-gallon drum must meet the appropriate 55-gallon drum DAC (DAC_3), listed in Table 5.2-7 or Table 5.2-8, to ensure that VOC solubility associated with the presence of the 55-gallon rigid drum liner does not impact the DAC for the 100-gallon drum.

Table 5.2-7 – Packaging-Specific DAC_3 Values (in Days) for Solidified Waste (Waste Types I and IV)

Packaging Configuration 1						
Drum Filter Minimum Hydrogen Diffusivity (m/s/mf)②	**Liner Lid Opening**				**No Lid**	**No Liner**
	0.3-inch Diameter Hole	**0.375-inch Diameter Hole**	**0.75-inch Diameter Hole**	**1-inch Diameter Hole**		
1.9×10^{-6}	131	95	37	24	4	4
3.7×10^{-6}	111	85	36	24	4	4
3.7×10^{-5}	28	28	23	19	4	4
Packaging Configuration 2						
Drum Filter Minimum Hydrogen Diffusivity (m/s/mf)②	**Liner Lid Opening**				**No Lid**	**No Liner**
	0.3-inch Diameter Hole	**0.375-inch Diameter Hole**	**0.75-inch Diameter Hole**	**1-inch Diameter Hole**		
1.9×10^{-6}	213	175	108	92	56	18
3.7×10^{-6}	188	161	105	90	56	17
3.7×10^{-5}	80	80	75	71	49	10
Packaging Configuration 3						
Drum Filter Minimum Hydrogen Diffusivity (m/s/mf)②	**Liner Lid Opening**				**No Lid**	**No Liner**
	0.3-inch Diameter Hole	**0.375-inch Diameter Hole**	**0.75-inch Diameter Hole**	**1-inch Diameter Hole**		
1.9×10^{-6}	283	243	171	154	107	34
3.7×10^{-6}	253	225	166	151	106	31
3.7×10^{-5}	121	121	115	110	84	13
Packaging Configuration 4						
Pipe Component Filter Minimum Hydrogen Diffusivity (m/s/mf)②	**Headspace Sample Taken Inside Pipe Component**					
1.9×10^{-6}	152					

Packaging Configuration 5	
Minimum Total Filter Diffusivity (m/s/mf)②	**Headspace Sample Taken Inside Direct Load SWB/TDOP**
7.4×10^{-6} (SWB)	15
3.3×10^{-5} (TDOP)	15

Packaging Configuration 6	
Minimum Total Filter Diffusivity (m/s/mf)②	**Headspace Sample Taken Inside Direct Load SWB/TDOP**
7.4×10^{-6} (SWB)	56
3.3×10^{-5} (TDOP)	56

Packaging Configuration 7①			
Drum Filter Minimum Hydrogen Diffusivity (m/s/mf)②	**Inner Lid Filter Vent Minimum Hydrogen Diffusivity (m/s/mf)②**		
	7.4×10^{-6}	**1.85×10^{-5}**	**9.25×10^{-5}**
3.7×10^{-6}	13	7	2
7.4×10^{-6}	10	6	2
1.85×10^{-5}	6	4	2

Notes:

① Headspace sample taken between inner and outer drum lids. If headspace sample is taken inside the filtered inner drum lid prior to placement of the outer drum lid, then a DAC_3 value of 2 days may be used.

② m/s/mf = mole per second per mole fraction.

Table 5.2-8 – Packaging-Specific DAC_3 Values (in Days) for Solid Waste (Waste Types II and III)

Packaging Configuration 1						
Drum Filter Minimum Hydrogen Diffusivity (m/s/mf)③	**Liner Lid Opening**				**No Lid**	**No Liner**
	0.3-inch Diameter Hole	**0.375-inch Diameter Hole**	**0.75-inch Diameter Hole**	**1-inch Diameter Hole**		
1.9×10^{-6}	131	95	37	24	4	4
3.7×10^{-6}	111	85	36	24	4	4
3.7×10^{-5}	28	28	23	19	4	4
Packaging Configuration 2						
Drum Filter Minimum Hydrogen Diffusivity (m/s/mf)③	**Liner Lid Opening**				**No Lid**	**No Liner**
	0.3-inch Diameter Hole	**0.375-inch Diameter Hole**	**0.75-inch Diameter Hole**	**1-inch Diameter Hole**		
1.9×10^{-6}	175	138	75	60	30	11
3.7×10^{-6}	152	126	73	59	30	11
3.7×10^{-5}	58	57	52	47	28	8
Packaging Configuration 3						
Drum Filter Minimum Hydrogen Diffusivity (m/s/mf)③	**Liner Lid Opening**				**No Lid**	**No Liner**
	0.3-inch Diameter Hole	**0.375-inch Diameter Hole**	**0.75-inch Diameter Hole**	**1-inch Diameter Hole**		
1.9×10^{-6}	199	161	96	80	46	16
3.7×10^{-6}	175	148①	93	79	46	16
3.7×10^{-5}	72	72	67	62	42	10
Packaging Configuration 4						
Pipe Component Filter Minimum Hydrogen Diffusivity (m/s/mf)③	**Headspace Sample Taken Inside Pipe Component**					
1.9×10^{-6}	152					

Packaging Configuration 5	
Minimum Total Filter Diffusivity (m/s/mf)③	**Headspace Sample Taken Inside Direct Load SWB/TDOP**
7.4×10^{-6} (SWB)	15
3.3×10^{-5} (TDOP)	15

Packaging Configuration 6	
Minimum Total Filter Diffusivity (m/s/mf)③	**Headspace Sample Taken Inside Direct Load SWB/TDOP**
7.4×10^{-6} (SWB)	56
3.3×10^{-5} (TDOP)	56

Packaging Configuration 7②			
Drum Filter Minimum Hydrogen Diffusivity (m/s/mf)③	**Inner Lid Filter Vent Minimum Hydrogen Diffusivity (m/s/mf)③**		
	7.4×10^{-6}	**1.85×10^{-5}**	**9.25×10^{-5}**
3.7×10^{-6}	13	7	2
7.4×10^{-6}	10	6	2
1.85×10^{-5}	6	4	2

Notes:

① DAC of 142 days is applicable provided that the packaging configuration does not exceed 3 inner bags and 2 liner bags. This DAC value for this bounding packaging configuration has been previously used to address headspace sampling issues at the sites for disposal purposes.[2]

② Headspace sample taken between inner and outer drum lids. If headspace sample is taken inside the filtered inner drum lid prior to placement of the outer drum lid, then a DAC_3 value of 2 days may be used.

③ m/s/mf = mole per second per mole fraction.

5.2.5 Unified Flammable Gas Test Procedure

5.2.5.1 Introduction

CH-TRU wastes to be transported in the TRUPACT-II and HalfPACT packages fall into one of two categories based on their gas generation potential—"analytical category waste" or "test category waste." The wastes that can be qualified for shipment based on decay heat limits derived from theoretical worst-case calculations of gas generation potential comprise the "analytical category." The CH-TRU waste containers that exceed the applicable decay heat limits set for the analytical category, or that exceed 500 ppm of flammable VOCs in the headspace, or that do not have an established theoretical bounding gas generation rate (G value), belong in the "test category." The Unified Flammable Gas Test Procedure (UFGTP) details the methodology used to evaluate compliance of test category wastes with flammable (gas/VOC) limits.

5.2.5.1.1 Purpose

This UFGTP provides the technical basis for determining whether a test category payload container demonstrates compliance with the flammable (gas/VOC) limits. It also provides instructions for the methodology by which each test activity will be performed. The first, or short-term, objective of the UFGTP is to facilitate shipment of waste in the test category by testing individual payload containers to show compliance with the flammable gas generation and concentration requirements. The second, or long-term, objective is to improve waste shippability for specific populations or subpopulations of waste by arriving at more realistic gas generation rates based on the results of measurement and testing. The process for implementation of the long-term objective is defined in the "UFGTP Long-Term Objective Implementation Methodology"[5] and described in Section 5.2.5.5.

5.2.5.1.2 Applicability

This procedure applies to individual containers of CH-TRU waste that fall into the test category. Containers are placed into the test category if they fall into one of the following classifications.

- The decay heat loading of the waste container exceeds the analytical category decay heat limit for the shipping category of that payload container and the total concentration of potentially flammable VOCs within the container headspace is less than or equal to 500 ppm. Payload containers in Waste Types I (10), II (20), and III (30) belong in this category.
- The total concentration of potentially flammable VOCs within the container headspace exceeds 500 ppm. Payload containers in Waste Type I (10), II (20), and III (30) belong in this category.

[5] Shaw Environmental & Infrastructure, Inc., current revision, *UFGTP Long-Term Objective Implementation Methodology*, Shaw Environmental & Infrastructure, Inc., Albuquerque, New Mexico.

- A waste process does not have a fully characterized bounding G value from previous sampling or waste stream analysis. Payload containers in Waste Type IV (40) belong to this category.

5.2.5.2 Summary of Procedure

The UFGTP details the methodology used to evaluate the compliance of test category wastes with flammable (gas/VOC) rate and concentration limits. As described in Section 5.2.2 of this document, the evaluation of compliance of test category wastes with the limits is carried out through the use of one of two methods:

- Measurement
- Testing.

The procedure outlined in this document is valid to show compliance on a per container basis assuming that each container will be assembled into a payload with payload containers belonging to the same payload shipping category, as defined in Section 5.1 of this document. Compliance evaluation requirements for payloads with multiple shipping categories and/or dunnage containers are described separately in Sections 6.2.4 and 6.2.5 of this document. Data obtained from this procedure may be used in the mixing methodology for compliance with flammable (gas/VOC) limits described in Section 6.2.4 and the evaluation for compliance with payload total gas release rate limits described in Section 6.2.5.

Both of the compliance evaluation methods for test category waste are described below.

Measurement

This consists of using a headspace gas measurement (taken under the container lid, liner lid, or pipe component lid) along with the waste packaging configuration and history of the container to demonstrate compliance with flammable (gas/VOC) limits. This is applicable to test category wastes of Waste Types I, II, and III that exceed decay heat limits and/or exceed 500 ppm flammable VOCs in the headspace of the payload container as indicated by Steps 1i and 2e in Figure 5.2-1 and Figure 5.2-2, respectively. The headspace concentrations of the flammable gases and the time history of the payload containers are used to determine the gas/VOC concentrations in the innermost confinement layer. The flammable gas generation rates are determined from these measured concentrations using analytical solutions as discussed in Appendix 3.10 of the CH-TRU Payload Appendices.[1]

The headspace concentrations of the flammable VOCs are used to calculate the concentrations in the innermost confinement layers using PFs determined as described in Appendix 3.9 of the CH-TRU Payload Appendices.[1] The headspace flammable (gas/VOC) concentrations are also used to determine compliance with the MLEL as discussed in Appendix 3.10 of the CH-TRU Payload Appendices.[1] The headspace concentrations of methane are evaluated for compliance with the screening limit of 1,250 ppm. Compliance with the allowable flammable (gas/VOC) concentrations using headspace gas measurement is described in detail in Section 5.2.5.3.

For all containers, flammable (gas/VOC) concentrations may be measured in an inner layer of confinement rather than the payload container headspace.

If the headspace of the outermost (overpacking) payload container of an overpacked configuration with multiple containers (drums in an SWB) is measured, the packaging

configuration must be described as a direct load configuration in order to apply the limits specified in this section.

Testing

The test method consists of performing container tests to determine compliance with flammable (gas/VOC) limits. This method is applicable to test category wastes that fail the measurement criteria and containers that do not have a bounding G value (i.e., Waste Type IV) as indicated by Steps 1e and 3g in Figure 5.2-1 and Figure 5.2-3, respectively. Sites may choose to implement testing in place of measurement to qualify test category wastes for shipment. Compliance with the allowable flammable gas generation rates and VOC concentrations using testing is described in detail in Section 5.2.5.4.

If the test method is performed on the outermost (overpacking) payload container of an overpacked configuration with multiple containers (drums in an SWB), the packaging configuration must be described as a direct load configuration in order to apply the limits specified in this section.

5.2.5.3 Procedure for Measurement

Compliance with transportation requirements through either measurement or testing shall either be documented on the CH-TRU Waste Test Category Payload Container Data Sheet (the Data Sheet) (Table 5.2-12) or shall be compiled through the use of a verified/validated software package based on the methodology presented in this section and in Appendix 3.10 of the CH-TRU Payload Appendices.[1] If documented manually, Table 5.2-12 may be reformatted for site purposes, but all information on the data sheet shall be retained. If sections of the data sheet are not applicable, mark as such (e.g., "not applicable" or "NA"). Record the identification parameters identified in Section 1 of the Data Sheet prior to proceeding to the other sections.

If a verified/validated software package is used, the necessary data shall be input and recorded to assess transportation compliance and Table 5.2-12 need not be completed.

The compliance evaluation for flammable (gas/VOC) limits by measurement is as described below:

5.2.5.3.1 Determine Compliance with Methane Screening Limit

[A] Determine the headspace concentration of methane. The headspace measurement methods and the associated QA requirements are discussed in the Quality Assurance Program Plan (QAPP) for the TRUPACT-II Gas Generation Test Program.[6]

[B] Record the location of methane measurement (container headspace or inside the rigid drum liner, if applicable), the date of methane measurement (if applicable), and the determined concentration of methane (see Section 2 of the Data Sheet).

[6] U.S. Department of Energy (DOE), *Quality Assurance Program Plan for TRUPACT-II Gas Generation Test Program*, DOE/WIPP 01-3187, current revision, U.S. Department of Energy, Carlsbad Field Office, Carlsbad, New Mexico.

[C] Compare the methane concentration to the 1,250 ppm screening limit. Indicate on the Data Sheet by (Yes/No) if the methane concentration is less than or equal to 1,250 ppm. (The rationale for the methane screening limit is provided below.)

> Position: A methane screening limit or concentration of 1,250 ppm in the container headspace should be used in flammability evaluations. If the container headspace methane concentration is below this screening limit, the concentration of methane should be added to the hydrogen concentration and the flammable gas generation rate should be determined. If the concentration is above the screening limit, the container is not eligible for shipment and the container shall be either repackaged or mitigation measures shall be adopted.
>
> Rationale: Although the term "flammable gases" includes both hydrogen and methane, gas measurement data suggest methane is either not present or is present in very low concentrations. Laboratory analysis of methane concentration in the container headspace to date has been performed on approximately 14,000 CH-TRU waste containers representing a broad spectrum of TRU waste content codes. In only two cases has methane been detected at concentrations greater than 1,000 ppm. Methods currently used by the Rocky Flats Environmental Technology Site and proposed for use for determining methane concentration in the headspace have minimum detection limits that range from 25 to 500 ppm. Other instruments (e.g., gas chromatograph with flame ionization detector or with thermal conductivity detector) have minimum detection limits ranging from 5 to 100 ppm. All of these instruments will provide data of adequate accuracy and precision to determine if the 1,250 ppm methane screening limit has been met.
>
> The 1,250 ppm methane screening limit concentration is equivalent to:
>
> - 2.5% of the methane lower explosive limit of 5 percent by volume
> - Fraction of the methane contribution to the flammable gas G value for polyethylene (i.e., [0.1 molecules methane/100 eV] / [4.1 molecules flammable gas /100 eV] or 2.4%).

If the methane concentration exceeds the 1,250 ppm screening limit, the payload container is not eligible for shipment and cannot be tested under this procedure and must be segregated for repackaging or other mitigation measures. If the methane concentration is less than or equal to 1,250 ppm, and if flammable VOCs could be present at concentrations greater than 500 ppm in the payload container headspace based on process knowledge (Step 1b, Figure 5.2-1), proceed to Section 5.2.5.3.2. Otherwise, mark the appropriate box in Section 3 of the Data Sheet that shows that flammable VOCs in the headspace are less than or equal to 500 ppm and proceed to Section 5.2.5.3.3.

5.2.5.3.2 Determine Concentration of Flammable VOCs Using PFs

[A] Based on the methodology presented in Section 5.2.4, determine the payload container headspace concentration (90% steady-state) from the headspace measurement for each of the flammable VOCs listed in Table 5.2-2. If additional flammable VOCs (i.e., not listed in Table 5.2-2) are identified in concentrations greater than 500 ppm total, the following process shall be used to include these VOCs in the analysis for compliance with flammable (gas/VOC) limits.

> Each flammable VOC not listed in Table 5.2-2 will be identified by name and corresponding Chemical Abstracts Service number. A list of these VOCs shall be submitted by the shipper to the WIPP CH-TRU Payload Engineer for evaluation. For each VOC, the WIPP CH-TRU Payload Engineer will direct the evaluation of required physical and chemical properties in order to calculate the PF using the methodology documented in Appendix 3.9 of the CH-TRU Payload Appendices and the Group Contribution Factor (GCF) using the methodology documented in Appendix 3.10 of the CH-TRU Payload Appendices.[1]

Record the measured concentration in units of ppm for each flammable VOC and for the sum of flammable VOCs (Section 3 of the Data Sheet). If the sum of flammable VOCs in the payload container headspace is less than or equal to 500 ppm, proceed to Section 5.2.5.3.3. Otherwise, proceed to Step B.

[B] For each flammable VOC, multiply the flammable VOC concentration in the payload container headspace by the appropriate PF to predict the concentration of each flammable VOC within the innermost confinement layer. The PFs are determined for the payload container based on its packaging as described in Section 5.2.4. Record the predicted innermost confinement layer concentration for each flammable VOC (Section 3 of the Data Sheet).

[C] Sum the predicted innermost confinement layer flammable VOC concentrations and record the sum (Section 3 of the Data Sheet).

[D] Proceed to Section 5.2.5.3.3 to see if compliance with the TRUPACT-II or HalfPACT design pressure limit can be established by theoretical analysis.

5.2.5.3.3 Determine Compliance with the Packaging Design Pressure Limit by Theoretical Analysis

As described in Section 3.4.4 of the TRUPACT-II[7] and HalfPACT[8] SARs, compliance with the TRUPACT-II and HalfPACT design pressure limits can be demonstrated by conservative theoretical analysis up to the wattage limits shown in Table 5.2-9 for Waste Types I, II, and III.

[7] U.S. Department of Energy (DOE), *TRUPACT-II Shipping Package Safety Analysis Report*, USNRC Certificate of Compliance 71-9218, U.S. Department of Energy, Carlsbad Area Office, Carlsbad, New Mexico.

[8] U.S. Department of Energy (DOE), *HalfPACT Shipping Package Safety Analysis Report*, USNRC Certificate of Compliance 71-9279, U.S. Department of Energy, Carlsbad Area Office, Carlsbad, New Mexico.

Table 5.2-9 – Wattage Limits for Theoretical Analysis of Design Pressure Limit

Waste Type	Container Type	Wattage Limit per Payload Container and per TRUPACT-II	Wattage Limit per Payload Container and per HalfPACT
I	55-gallon drum	40	30
	Other container types①	40	20
	TDOP	40	NA②
II	55-gallon drum	40	30
	Other container types①	40	20
	TDOP	40	NA②
III	55-gallon drum	37	27
	Direct load SWB	23	17
	55-gallon drum in an SWB overpack	38	20
	85-gallon drum, 85-gallon drum overpack, or 55-gallon drum in an 85-gallon drum overpack	26	18
	100-gallon drum	32	20
	TDOP	18	NA②

Notes:

① Other container types are defined as follows: direct load SWB, 55-gallon drum in an SWB overpack, 85-gallon drum, 85-gallon drum overpack, 55-gallon drum in an 85-gallon drum overpack, and 100-gallon drum.

② NA = Not applicable.

For cases where the wattage limits specified in Table 5.2-9 are exceeded but the packaging design limit of 40 watts per TRUPACT-II or 30 watts per HalfPACT is met, compliance with the container flammable gas generation rate limit by the methodology described in Section 5.2.5.3.4, 5.2.5.3.5, or 5.2.5.4 can be used to evaluate compliance with the total gas generation rate limit. Because the primary mechanism for gas generation for both flammable and total gas for Waste Types I, II, and III is radiolysis, compliance with the flammable gas generation rate limit implies actual G values (both flammable and total) that are much lower than those used to derive the limits in Table 5.2-9. Therefore, compliance with the flammable gas generation rate limits will ensure compliance with the total gas generation rate limits for these cases (e.g., Waste Type III SWBs greater than 23 watts in a TRUPACT-II or 17 watts in a HalfPACT). An example calculation is provided below:

> Assuming an SWB of Waste Material Type III.1 with no layers of confinement and a decay heat loading of 30 watts, compliance with the total gas generation rate limit is ensured if compliance with the flammable gas generation rate limit can be demonstrated by measurement or testing. Using the equations in Section 5.2.3, the maximum allowed

hydrogen gas generation rate for the test category SWB can be calculated as 1.79E-07 moles/second. Based on the 30-watt decay heat loading of the SWB and the requirement for the SWB hydrogen gas generation to be less than or equal to 1.79E-07 moles/second, the actual G value (flammable gas) for this container can be calculated as 0.06. This compares to a theoretical G value (flammable gas) of 1.09 used to derive the analytical category limits. Because the mechanism for both hydrogen and total gas generation is radiolysis, a similar ratio exists between the actual and theoretical gas generation rates for hydrogen and total gas. This means that if the SWB passes the hydrogen gas generation rate limit of 1.79E-07 moles/second, the actual G value (total gas) for this container will be lower than the theoretical G value used to derive the limits in Table 5.2-9 by a factor of 1.09/0.06 = 18. Therefore, the actual total gas generation from this container will be extremely low and will easily comply with the packaging design pressure limits.

Determine the sum of the measured decay heat value and the decay heat measurement error (one standard deviation) for the payload container from its data package. Record the decay heat plus the associated error and the wattage limit for the container and waste type from Table 5.2-9 (Section 4 of the Data Sheet), and compare the two values. (Note that the limits specified in Table 5.2-9 are per payload container and per TRUPACT-II or HalfPACT.) If the container decay heat plus error is less than or equal to the appropriate value in Table 5.2-9 and the concentration of flammable VOCs in the payload container headspace is less than or equal to 500 ppm, proceed to Section 5.2.5.3.4. If the container decay heat plus error is less than or equal to the appropriate value in Table 5.2-9 and the concentration of flammable VOCs in the payload container headspace is greater than 500 ppm, proceed to Step 5.2.5.3.5. If the container decay heat plus error is greater than the appropriate value in Table 5.2-9, then the container may be evaluated for compliance for flammable gas generation rate limits as described in Sections 5.2.5.3.4 and 5.2.5.3.5. If compliance with the flammable gas generation rate limits is demonstrated, then the total gas generation rate limits are met as described above.

5.2.5.3.4 Determine Compliance with Flammable Gas Generation Rate Limit

[A] Calculate the flammable gas generation rate (FGGR) within the innermost layer of confinement using the measured flammable gas concentration in the container and the time history of the payload container using the AltMeth algorithm described in Appendix 3.10 of the CH-TRU Payload Appendices.[1] Headspace measurement methods and associated QA/QC requirements are provided in the QAPP.[6] Record the calculated FGGR (Section 4 of the Data Sheet).

[B] Record the maximum allowable hydrogen gas generation rate for the corresponding shipping category determined in accordance with the methodology described in Section 5.2.3 (Section 4 of the Data Sheet).

[C] Compare the calculated FGGR to the maximum allowable hydrogen gas generation rate. If the calculated FGGR is less than or equal to the maximum allowable hydrogen gas generation rate, then the payload container may be shipped if compliance with all other transportation requirements is demonstrated. If the calculated FGGR exceeds the maximum allowable hydrogen gas generation rate, the container may be reassessed for compliance with transportation requirements through the evaluation of a payload with different shipping categories or dunnage containers, as described in Section 6.2.4. If the

calculated FGGR exceeds the maximum allowable hydrogen gas generation rate and the payload container is not reassessed as described in Section 6.2.4, then proceed to Section 5.2.5.4 for testing.

If the calculated FGGR for each overpacked container is less than or equal to the maximum allowable hydrogen gas generation rate for the payload shipping category, then the overpack may be shipped if compliance with all other transportation requirements is demonstrated.

If the calculated FGGR of any type of overpacked container exceeds the maximum allowable hydrogen gas generation rate limit of the payload shipping category, the container may be reassessed under the logic of Section 6.2.4 and Appendix 2.4 of the CH-TRU Payload Appendices.[1]

If the calculated FGGR of an overpacked container exceeds the maximum allowable hydrogen gas generation rate for the payload shipping category and is not reassessed through the logic of Section 6.2.4 and Appendix 2.4 of the CH-TRU Payload Appendices[1], then proceed to Section 5.2.5.4 for testing. Otherwise, the overpack shall be reconfigured, or mitigative measures shall be adopted. For mixing of container shipping categories within an overpack configuration, the configuration must be assessed under the logic of Section 6.2.4 and Appendix 2.4 of the CH-TRU Payload Appendices.[1]

If the above relevant limits are met, the payload container satisfies the test criteria. If the Data Sheet is used to document compliance, then the Data Sheet is signed by the Transportation Certification Official. If compliance is determined using a verified/validated software package, then the necessary data are stored electronically and the Transportation Certification Official signs the completed PCTCD or OPCTCD, as appropriate. The payload container qualifies for shipment after verification of all of the transportation parameters. Containers that do not meet the test category criteria are segregated for repackaging or reprocessing.

5.2.5.3.5 Determine Compliance with Flammable (Gas/VOC) Concentration Limit

[A] Calculate the FGGR within the innermost layer of confinement using the measured flammable gas concentration in the payload container and the time history of the container (based on the methodology in Appendix 3.10 of the CH-TRU Payload Appendices[1]). Headspace measurement methods and associated QA/QC requirements are provided in the QAPP.[6] Record the calculated FGGR (Section 4 of the Data Sheet).

[B] Calculate the concentration of the flammable gas within the innermost confinement layer at the end of the shipping period inside a TRUPACT-II or HalfPACT (X_{inner}) using the following equation:

$$X_{inner} = CG * R_T$$

where,

CG = Calculated FGGR (mole/second)

R_T = The total resistance to hydrogen release (second/mole) (see Appendix 2.2 of the CH-TRU Payload Appendices[1]).

Record the calculated innermost confinement layer flammable gas concentration (Section 4 of the Data Sheet).

[C] Calculate the container-specific MLEL within the innermost confinement layer using the flammable group method as described in Appendix 3.10 of the CH-TRU Payload Appendices[1] using the following equation:

$$\text{MLEL} = \frac{100\%}{\sum f_i \, GCF_i}$$

where,

MLEL = Mixture lower explosive limit (volume percent)

f_i = Fraction of flammable gas *i* in mixture on an air-free and nonflammable VOC-free basis (i.e., the concentration of flammable compound *i* divided by the sum of the concentrations of flammable VOCs and flammable gas)

GCF_i = Group contribution factor for compound *i*

The GCF values for various compounds are listed in Appendix 3.10 of the CH-TRU Payload Appendices.[1] Record the MLEL (Section 4 of the Data Sheet).

[D] Calculate and record the sum of the concentrations of the flammable gas in the innermost confinement layer and the flammable VOCs in the innermost confinement layer (Section 4 of the Data Sheet).

[E] Compare the sum of the flammable gas and flammable VOC concentrations within the innermost confinement layer to the calculated MLEL. If the sum of the flammable gas and VOC concentrations is less than or equal to the MLEL, then the container may be shipped if compliance with all other transportation requirements is demonstrated.

If the sum of the flammable gas and VOC concentrations exceeds the MLEL, the container may be reassessed for compliance with transportation requirements through the evaluation of a payload with different shipping categories or dunnage containers, as described in Section 6.2.4. If the sum of the flammable gas and VOC concentrations exceeds the MLEL and the container is not reassessed through the logic of Section 6.2.4 and Appendix 2.4 of the CH-TRU Payload Appendices[1], then proceed to Section 5.2.5.4 for testing. Otherwise, the container shall be reconfigured or mitigative measures shall be adopted.

[F] In the case of an overpack configuration with multiple containers (drums in an SWB or TDOP) that consist of one or more overpacked payload container(s), the configuration must be assessed under the logic of Section 6.2.4 and Appendix 2.4 of the CH-TRU Payload Appendices.[1]

If the above relevant limits are met, the payload container satisfies the test category criteria. If the Data Sheet is used to document compliance, then the Data Sheet is signed by the Transportation Certification Official. If compliance is determined using a verified/validated software package, then the necessary data are stored electronically and the Transportation Certification Official signs the completed PCTCD or OPCTCD, as appropriate. The payload container qualifies for shipment after verification of all of the transportation parameters.

Containers that do not meet the test category criteria are segregated for repackaging or reprocessing.

5.2.5.4 Procedure for Testing

5.2.5.4.1 Determine Compliance with Flammable (Gas/VOC) Limit Through Testing

Containers selected for testing must be shown to meet all other applicable transportation limits (weight, FGE, dose rate, etc.). Waste containers chosen for testing shall fall under the definition of a test category waste as described in Section 5.2.5.1.2 and shall be subject to the decay heat criteria shown in Table 5.2-10.

Table 5.2-10 – Decay Heat Criteria for Container Selection

Waste Type	Shipping Category	Maximum Decay Heat per Container and per Packaging		Test Temperature
		TRUPACT-II	HalfPACT	
I, II, and III	All shipping categories for 55-gallon drums	40	30	RT②
	All shipping categories for other container types①	40	30	RT②
	All shipping categories for TDOPs	40	NA③	RT②
IV	All shipping categories for 55-gallon drums	7	7	135
	All shipping categories for other container types①	7	3.5	148

Notes:

① Other container types are defined as follows: direct load SWB, 55-gallon drum in an SWB overpack, 85-gallon drum, 85-gallon drum overpack, 55-gallon drum in an 85-gallon drum overpack, and 100-gallon drum.

② RT = Room temperature. For gas generation testing, should be at a minimum of 64°F. Higher temperatures are allowed and will yield conservative results.

③ NA = Not applicable.

Table 5.2-10 also specifies the temperatures at which gas generation testing must be performed. Testing temperatures are based on compliance with TRUPACT-II and HalfPACT design pressure limits, and elevated temperature gas generation testing is only necessary in cases where compliance with the packaging design pressure limits cannot be demonstrated through theoretical analysis or if a correlation cannot be established between flammable gas generation limits and total gas (i.e., for Waste Type IV). As required in Section 5.2.5.3.3 and as described in Section 3.4.4 of the TRUPACT-II[7] and HalfPACT[8] SARs, compliance with the TRUPACT-II and HalfPACT design pressure limits can be demonstrated by conservative theoretical analysis

up to the wattage limits shown in Table 5.2-9 for Waste Types I, II, and III. For Waste Types I, II, and III above the values in Table 5.2-9 and below the packaging design limits, a correlation exists between flammable gas and total gas as described in Section 5.2.5.3.3. For Waste Type IV, testing shall be performed at the elevated temperatures listed in Table 5.2-10.

5.2.5.4.2 Test Apparatus

A test apparatus will be used that allows measurement of the gas generation rate from a container. This setup will also allow sampling of the offgas during the test in order to measure the concentrations of hydrogen, methane (if applicable), and possibly other compounds of interest. The test apparatus will enclose a container of waste, be heated to the predetermined temperature, if applicable (see Table 5.2-10), and be monitored for the test temperature during testing. Any combination of hardware and software that collects data that meet the QA objectives of the QAPP[6] may be used to perform testing. It is likely that facilities participating in the TRUPACT-II Gas Generation Test Program will use identical or similar equipment for ease of performance validation. The steps in the procedure are centered around the following activities:

- Measurement of barometric pressure
- Temperature control and measurement (for applicable containers)
- Gas generation measurement or determination (for applicable containers)
- Gas sampling
- Gas analyses.

In order to test the waste for gas generation, the temperature of the container will either be at room temperature or will be raised for Waste Type IV, as shown in Table 5.2-10. Where elevated temperature testing is required, the selected waste container is placed in an insulated overpacking container enclosure or a temperature-controlled environment. Insulation, heat tape, thermocouples, and controllers may be used to monitor and control the temperature. The test temperature for Waste Type IV has been calculated based upon the maximum allowed wattage for shipped waste and is listed in Table 5.2-10.

Barometric pressure will be determined in a location that will give sufficient information regarding the pressure of the sampled gas(es). Each sample analysis must have an associated barometric pressure measurement.

Data will be gathered from the test apparatus using a flow measurement or gas sampling device. Measurements or determinations of the total gas flow rate and/or associated hydrogen/methane gas concentrations will be used to calculate the hydrogen/methane gas generation rate. A mass flow meter, or other device, if used, may be placed outside of the waste container but within the overpacking container enclosure to avoid condensation of any gases within the flow device.

Sampling of gases may be accomplished using either of two methods. A sampling manifold will be a part of the waste container test unit. This manifold will be used to either collect discrete samples in containers or to divert a stream of gas to an analytical instrument. If discrete samples are collected, they will be sent to an analytical laboratory for analyses. If a stream is diverted to an analytical instrument, such as a mass spectrometer, this is called on-line sampling and analysis. Once the test begins, gas sampled during the test will be analyzed for hydrogen and

methane (if applicable), and possibly for other gases of interest (e.g., oxygen, nitrogen, carbon dioxide, hydrogen sulfide, sulfur dioxide, and sulfur trioxide).

The headspace of the containers will be sampled and analyzed for VOCs, if necessary, before the container is qualified for shipment.

5.2.5.4.3 Data Quality Objectives

Data quality objectives (DQOs) are the qualitative and quantitative statements developed by data users to specify the quality of data required from a particular data collection activity. The DQOs for the testing are specified in the QAPP.[6]

The QAPP[6] defines the QA objectives associated with these data measurements. Specific QA measures will also be followed for sample custody, calibration of equipment, data reporting, and data reduction.

5.2.5.4.4 Test Startup and Test Completion

The test startup consists of placing the waste container in the test apparatus and, if specified in Table 5.2-10, heating the test unit to the required test temperature. Site-specific operating procedures describe the sampling and analysis required on a routine basis. The test will be terminated after sufficient data are obtained to calculate the hydrogen gas generation rate.

The term "sufficient data" is defined as data on the parameters needed to quantify a bounding and applicable gas generation rate for the container under the test conditions prescribed in the UFGTP. In the case of containers that are tested at room temperature (Waste Types I, II, and III), sufficient data is measurement of the flammable gas concentration, temperature, and pressure. For these containers there is no thermal equilibration of the contents with respect to the testing temperature and the gas generation rates are constant or decreasing (see Appendices 3.2 and 3.3 of the CH-TRU Payload Appendices[1]). For containers that are tested at an elevated temperature (Waste Type IV), a thermal equilibration period exists. Measurements are taken after the equilibration period to quantify the maximum flammable gas and total gas generation rates. In this case, sufficient data is measurement of flammable gas and total gas generation rates, temperature, and pressure during a testing period that is extended until the rates are shown to remain constant or decrease, or until the testing period (time from container isolation and commencement of heating to the collection of the final gas sample) equals or exceeds the time of the allowed shipping period. In all cases, the collection of data as described herein ensures that the measured rates determined through testing are representative of the gas generation properties of the container over the allowed shipping period. The measured rates are then compared to the respective limits to demonstrate compliance with the allowable gas generation rates.

5.2.5.4.5 Determination of Shippability

At the completion of the test, the test results will be analyzed to determine if the container can be shipped in the TRUPACT-II or HalfPACT packages under the test category. Record the identification parameters identified in Section 1 of the Data Sheet and complete the following:

[A] Determine compliance with the methane screening limit, as specified in Steps A through C of Section 5.2.5.3.1.

[B] If the methane concentration exceeds the 1,250 ppm screening limit, the container is not eligible for shipment and cannot be tested under this procedure and must be segregated for repackaging or other treatment measures. If the methane concentration is less than or equal to 1,250 ppm and if flammable VOCs could be present at concentrations greater than 500 ppm in the payload container headspace based on process knowledge (Step 1b, Figure 5.2-1), proceed to Step C. If the flammable VOCs in the headspace are less than or equal to 500 ppm, proceed to Step D.

[C] Determine concentration of flammable VOCs, as specified in Steps A through C of Section 5.2.5.3.2.

[D] Determine the sum of the measured decay heat value and the decay heat measurement error (one standard deviation) for the payload container from its data package. Record the decay heat plus the associated error (Section 5 of the Data Sheet).

[E] From Table 5.2-10, record the maximum decay heat per container and per TRUPACT-II or HalfPACT (Section 5 of the Data Sheet), and determine if gas generation testing is to be performed at room temperature (Waste Types I, II, and III). If so, the total gas generation rate limit is met through theoretical analysis as shown in Section 5.2.5.3.3.

[F] If gas generation testing is not performed at room temperature (Waste Type IV), record the total measured gas release rate for the payload container and the maximum allowable total gas release rate for the payload container (from Table 5.2-11). Compare the total measured gas release rate to the limit for the corresponding container type. If the total measured gas release rate of the container exceeds the maximum allowable total gas release rate, the container may be reassessed for compliance with transportation requirements through the evaluation of compliance with the payload total gas release rate limits as described in Section 6.2.5. Otherwise, the container shall be reconfigured or mitigative measures shall be adopted.

Table 5.2-11 – Maximum Allowable Total Gas Release Rates for Waste Type IV

Waste Type IV Payload Container	Maximum Allowable Total Gas Release Rate (mol/s/container) ①②
55-Gallon Drum	3.97E-06
Direct Load SWB	1.98E-05
55-gallon drum in SWB overpack	9.87E-06
85-Gallon Drum, 85-Gallon Drum Overpack, or 55-Gallon Drum in 85-Gallon Drum Overpack	5.90E-06
100-Gallon Drum	1.02E-05

Notes:

① The maximum total gas release rates (in moles per second per payload container) were determined from analysis as described in Section 3.4.4 of the TRUPACT-II[7] and HalfPACT[8] SARs.

② If the measured gas release rate exceeds the maximum total gas release rate per container, the container may qualify for shipment using the methodology for evaluation of compliance with the payload total gas release rate limits described in Section 6.2.5.

[G] Record the measured FGGR for the payload container (Section 5 of the Data Sheet).

[H] If flammable VOCs are present in the container headspace at concentrations less than or equal to 500 ppm, as determined in Step B, determine the maximum allowable hydrogen gas generation rate for the corresponding shipping category (as listed in Table 5.2-1 or as determined in accordance with the methodology described in Section 5.2.3). Record the maximum allowable hydrogen gas generation rate (Section 5 of the Data Sheet). Compare the measured FGGR to the allowable rate limit.

If the measured FGGR of the container is less than or equal to the maximum allowable hydrogen gas generation rate for the corresponding shipping category, then the container may be shipped if compliance with all other transportation requirements is demonstrated.

If the measured FGGR of the container exceeds the maximum allowable hydrogen gas generation rate, the container may be reassessed for compliance with transportation requirements through the evaluation of a payload with different shipping categories or dunnage containers, as described in Section 6.2.4. Otherwise, the container shall be reconfigured or mitigative measures shall be adopted.

[I] If VOCs are present in the container headspace at concentrations greater than 500 ppm, as demonstrated in Step C, calculate the predicted innermost confinement layer flammable gas concentration (X_{inner}) at the end of the shipping period as:

$$X_{inner} = CG * R_T$$

where,

CG = Measured FGGR (mole/second)

R_T = The total resistance to hydrogen release (second/mole) (see Appendix 2.2 of the CH-TRU Payload Appendices[1]).

Record the calculated innermost confinement layer flammable gas concentration (Section 5 of the Data Sheet).

[J] Calculate the MLEL as described in Section 5.2.5.3.5. Record the MLEL (Section 5 of the Data Sheet).

[K] Calculate the sum of the concentrations of the flammable gas in the innermost confinement layer and the flammable VOCs in the innermost confinement layer. Record the sum (Section 5 of the Data Sheet).

[L] Compare the sum of the flammable gas and flammable VOC concentrations within the innermost confinement layer to the calculated MLEL. Indicate by (Yes/No) if the limit is met (Section 5 of the Data Sheet).

If the sum of the flammable gas and VOC concentrations is less than or equal to the MLEL, then the container may be shipped if compliance with all other transportation requirements is demonstrated.

If the sum of the flammable gas and VOC concentrations exceeds the MLEL, the container may be reassessed for compliance with transportation requirements through the evaluation of a payload with different shipping categories or dunnage containers, as described in Section 6.2.4. Otherwise, the container shall be reconfigured or mitigative measures shall be adopted.

[M] In cases of overpack configurations with multiple containers (drums in an SWB or TDOP), the configuration must be assessed under the logic of Section 6.2.4 and Appendix 2.4 of the CH-TRU Payload Appendices.[1]

If the above relevant limits are met, the payload container satisfies the test category criteria. If the Data Sheet is used to document compliance, then the Data Sheet is signed by the Transportation Certification Official. If compliance is determined using a verified/validated software package, then the necessary data are stored electronically and the Transportation Certification Official signs the completed PCTCD or OPCTCD, as appropriate. The payload container qualifies for shipment after verification of all of the transportation parameters. Containers that do not meet the test category criteria may be qualified for shipment in accordance with Section 6.2.4 and/or Section 6.2.5. If the payload container cannot be qualified for shipment, the container must be segregated for repackaging or reprocessing.

5.2.5.5 Implementation of Unified Flammable Gas Test Procedure Long-Term Objective

The long-term objective of the UFGTP is applied to a population of containers with consistent gas generation properties. The long-term objective of the UFGTP may be implemented once the required data have been collected through measurement and/or testing for a subpopulation of these containers. If a bounding FGGR value for compliance determination can be established and shown to be below the maximum allowable FGGR for the population, no further need exists to test every container in the population. If the bounding FGGR value exceeds the maximum allowable FGGR, the population will continue to be processed under the measurement and

testing methodology of the UFGTP. This methodology is consistent with that used in the determination of dose-dependent G values in Appendix 3.3 of the CH-TRU Payload Appendices.[1]

Site implementation of the UFGTP long-term objective must be documented in site-specific programs approved by DOE-CBFO.

5.2.5.5.1 Required Data and Criteria for Subpopulation

Containers that are identified by process knowledge or other characterization to have similar properties with respect to gas generation are grouped into populations. The basis for grouping individual containers into a population shall be documented (e.g., by item description codes showing all containers are generated from the same waste stream). Within a given population, a subpopulation size may be determined and subjected to gas generation testing (i.e., measurement or container gas generation testing). The results of testing the subpopulation may be used to calculate flammable gas generation properties for the remainder of the population. The following data for each container of the subpopulation (i.e., that has undergone gas generation testing or measurement) shall be available:

- Content code and shipping category, from which the maximum allowable FGGR is determined
- Date of container closure, date of venting, and date of measurement or testing
- Methane concentration (Section 5.2.5.3.1)
- Flammable gas generation rate (Section 5.2.5.3.4 or 5.2.5.4)
- Total gas generation rate for Waste Type IV (Section 5.2.5.4).

5.2.5.5.2 Statistics for Required Subpopulation Size

Containers selected for evaluation (i.e., the subpopulation) must be representative of the population with random or stratified sampling techniques used to avoid any bias in container selection. The required subpopulation size to implement the long-term objective will be calculated through the following equation[5]:

$$n = \frac{n_0}{1 + \frac{(n_0 - 1)}{N}}$$

where,

n_0 = A conservative subpopulation size for an infinite population for a confidence level of 95% and a ±5% precision level. In this case, the upper tail of the distribution curve is of interest, and n_0 has a value of 271.[5]

n = The required subpopulation size

N = The true population size.

As shown by the formula, the minimum number of required containers depends on the true population size.

5.2.5.5.3 Assignment of Flammable Gas Generation Properties for Population

A 95% upper tolerance limit (UTL) (the 95% upper confidence limit of the 95th percentile) of the methane concentration, FGGR, and total gas generation rate (if required) shall be calculated for each subpopulation using a bootstrapping or comparable non-parametric technique.[5] Non-parametric statistics are used to ensure the validity of this procedure regardless of the distribution shape of the subpopulation gas generation values. The 95% UTL of the methane concentration, FGGR, and total gas generation rate values will then be assigned to the remainder of the containers in the population in place of actual test values in evaluating compliance with the flammable gas/VOC limits using the methodology documented in Section 5.2.5.

This page intentionally left blank.

Table 5.2-12 – CH-TRU Waste Test Category Payload Container Data Sheet①

SECTION 1: IDENTIFICATION PARAMETERS

Container ID# : _____ Container Bar Code # :_____

Shipping Category: _____ Content Code: _____

Container Type: ○ 55-gallon drum ○ SWB ○ TDOP ○ 100-gallon drum ○ 85-gallon drum

Filter Type: _____

Certification Site: _____

Test Category Classification:

Measurement (Waste Types I, II, or III) (Complete Sections 2, 3, 4, and 6)	Testing (Complete Sections 2, 3, 5, and 6)
○ Decay Heat > Analytical Limit	○ Decay Heat > Analytical Limit
○ Flammable VOC Concentration > 500 ppm	○ Fail Measurement
	○ Waste Type IV

SECTION 2: METHANE CONCENTRATION②

Location of Methane Measurement	Container Headspace/Inside Liner
Date of Methane Measurement	_____
Measured Methane Concentration (ppm)	_____
Measured Methane Concentration ≤1,250 ppm	_____YES/NO_____

Notes:

① This data sheet does not need to be completed if a verified/validated software package is used to determine transportation compliance.

② To be completed as defined in the QAPP[6], if applicable.

SECTION 3: FLAMMABLE VOC CONCENTRATION

○ No Flammable VOCs Present

○ Maximum Concentration of Flammable VOCs in Payload Container Headspace ≤500 ppm (from Process Knowledge)

Flammable VOC③	Headspace Measured Concentration (ppm)	Predicted Innermost Confinement Layer Concentration (ppm)
Acetone		
Benzene		
1-Butanol		
Chlorobenzene		
Cyclohexane		
1,1-Dichloroethane		
1,2-Dichloroethane		
1,1-Dichloroethene		
cis-1,2-Dichloroethene		
Ethyl benzene		
Ethyl ether		
Methanol		
Methyl ethyl ketone		
Methyl isobutyl ketone		
Toluene		
1,2,4-Trimethylbenzene		
1,3,5-Trimethylbenzene		
m-Xylene		
o-Xylene		
p-Xylene		
Sum of Flammable VOCs		

Note:

③ If additional flammable VOCs are identified in concentrations greater than 500 ppm total, the methodology documented in Section 5.2.5.3.2 will be used.

SECTION 4: MEASUREMENT

1.	Decay Heat Plus Error (W)	_____
	Wattage Limit for TRUPACT-II or HalfPACT Design Pressure Limit	_____
	Decay Heat Plus Error ≤ Wattage Limit for TRUPACT-II or HalfPACT Design Pressure Limit	YES / NO
2.	Calculated Flammable Gas Generation Rate (FGGR) (mol/sec)	_____
3a.	Maximum Allowable Hydrogen Gas Generation Rate of Container (mol/sec)	_____
	Calculated FGGR ≤ Maximum Allowable Hydrogen Gas Generation Rate of Container	YES / NO
3b.	Calculated Innermost Confinement Layer Flammable Gas Concentration (vol%)	_____
	Mixture Lower Explosive Limit (MLEL) (vol %)	_____
	Calculated Innermost Confinement Layer Flammable Gas Concentration Plus Sum of Flammable VOCs (Innermost Confinement Layer Concentration) (vol %)	_____
	Calculated Innermost Confinement Layer Flammable Gas Plus Flammable VOCs ≤ MLEL	YES / NO

SECTION 5: TESTING

1. Decay Heat Plus Error (W) _____

2. Maximum Decay heat per Drum and per TRUPACT-II or HalfPACT (W) _____

3a. May Gas Generation Testing be Performed at Room Temperature? YES / NO

3b. Total Measured Gas Release Rate (mol/sec) _____
Maximum Allowable Total Gas Release Rate (mol/sec) _____

Total Measured Gas Release Rate ≤ Maximum Allowable Gas Release Rate Limit YES / NO

4. Measured Flammable Gas Generation Rate (FGGR) (mol/sec) _____

5a. Maximum Allowable Hydrogen Gas Generation Rate (mol/sec) _____

Measured FGGR ≤ Maximum Allowable Hydrogen Gas Generation Rate YES / NO

5b. Calculated Innermost Confinement Layer Flammable Gas Concentration (vol %) _____

Mixture Lower Explosive Limit (MLEL) (vol %) _____

Calculated Innermost Confinement Layer Flammable Gas Concentration Plus Sum of Flammable VOCs (Innermost Confinement Layer Concentration) (vol %) _____

Calculated Innermost Confinement Layer Flammable Gas Plus Flammable VOCs ≤ MLEL YES / NO

SECTION 6: MEASUREMENT/TESTING CERTIFICATION

Does Payload Container Meet Test Category Criteria? _____YES / NO_____

_____ / _____

TRANSPORTATION CERTIFICATION OFFICIAL / DATE

This page intentionally left blank.

5.3 Venting and Aspiration

5.3.1 Requirements

Payload containers that have been stored in an unvented condition (i.e., no filter and/or unpunctured liner) shall be aspirated for the specific length of time to ensure equilibration of any gases that may have accumulated in the closed container. For payload containers with waste types in packaging configurations that do not generate any flammable gas, aspiration is not required (i.e., Waste Material Type II.2). Note: The aspiration requirement is applicable only to containers that have been stored in an unvented condition. The derivation of aspiration times is outlined in Appendix 3.7 of the CH-TRU Payload Appendices.[1]

5.3.2 Methods of Compliance and Verification

The following sections describe the three options that are available for determining the required aspiration time. Tables in this section present aspiration times for common packaging configurations. Aspiration times for authorized configurations not covered by the tables in this section shall be determined as outlined in Appendix 3.7 of the CH-TRU Payload Appendices.[1]

5.3.2.1 Option 1—Aspiration Time Based on Date of Payload Container Closure

Compliance shall be by records and database information. For sites using this option, the steps outlined below shall be implemented to determine the aspiration time for a payload container.

1. The potential shipping category of the payload container shall be known.
2. The duration for which the container has been in a closed condition should be computed from a knowledge of the date of closure of the drum. This closure time should be rounded up to the next highest time period listed in Table 5.3-1, Table 5.3-2, or Table 5.3-3.
3. The required aspiration time corresponding to this closure time shall then be read from the same table under the column for the number of layers of confinement associated with the appropriate container shipping category.
4. The container shall be qualified for shipment only after being aspirated for at least this period of time.

5.3.2.2 Option 2—Headspace Gas Sampling at the Time of Venting

Compliance shall be by measurement of headspace gas concentrations and records. For sites using this option, the steps outlined below shall be implemented to determine the aspiration time for a payload container.

1. The potential shipping category of the payload container shall be known.

[1] U.S. Department of Energy (DOE), *CH-TRU Payload Appendices*, U.S. Department of Energy, Carlsbad Field Office, Carlsbad, New Mexico.

2. At the time of venting, a headspace sample shall be taken from the container headspace (Option 2A) or from the rigid liner headspace (Option 2B) and analyzed for the hydrogen concentration.
3. The measured headspace concentration of all hydrogen shall be rounded up to the next highest mole percentage listed in Table 5.3-4, Table 5.3-5, Table 5.3-6, Table 5.3-7, Table 5.3-8, or Table 5.3-9, determined by Option 2A or 2B, as appropriate.
4. The required aspiration time corresponding to this molar percentage shall be read from the same table under the column for the number of layers of confinement associated with the appropriate container shipping category.
5. The container shall be qualified for shipment only after being aspirated for at least this period of time.

5.3.2.3 Option 3—Headspace Gas Sampling During Aspiration

Compliance shall be by direct measurement of the headspace gas concentration. For sites using this option, the steps outlined below shall be implemented to determine the aspiration time for a payload container.

1. The potential shipping category of the payload container shall be known.
2. Prior to measuring the hydrogen concentration in the payload container headspace, the drum shall be vented for at least two weeks.
3. The measured headspace concentration of hydrogen shall be rounded up to the next highest mole percentage listed in Table 5.3-10, Table 5.3-11, or Table 5.3-12.
4. The required aspiration time corresponding to this molar percentage shall be read from the same table under the column for the number of layers of confinement associated with the appropriate container shipping category.
5. The container shall be qualified for shipment only after being aspirated for this period of time.

Table 5.3-1 – Aspiration Times Based on Date of Drum Closure (Waste Type I①)

Age of Waste		By Number of Layers of Confinement (Days)				
(Months)	(Years)	0	1	2	3	4
1	0.083	0	0	0	0	0
2	0.167	92	92	91	0	0
3	0.250	115	117	120	11	2
4	0.333	128	131	135	37	19
5	0.417	137	141	146	101	35
6	0.500	144	149	154	192	56
7	0.583	150	155	160	239	111
8	0.667	154	160	166	270	219
9	0.750	159	164	171	294	281
10	0.833	162	168	175	312	323
11	0.917	166	172	178	328	355
12	1.000	169	175	182	341	380
14	1.167	174	180	188	363	419
16	1.333	178	185	193	380	449
18	1.500	182	189	197	395	473
20	1.667	186	193	201	407	493
22	1.833	189	196	204	418	510
24	2.000	192	199	207	428	526
26	2.167	194	202	210	437	539
28	2.333	197	205	213	445	551
30	2.500	199	207	215	452	562
32	2.667	201	209	218	459	572
34	2.833	201	211	220	465	582
36	3.000	201	211	222	471	590
38	3.167	201	211	222	477	598
40	3.333	201	211	222	482	606
42	3.500	201	211	222	487	613
44	3.667	201	211	222	491	620
46	3.833	201	211	222	496	626

Age of Waste		By Number of Layers of Confinement (Days)				
(Months)	(Years)	0	1	2	3	4
48	4.000	201	211	222	500	633
50	4.167	201	211	222	504	638
52	4.333	201	211	222	508	644
54	4.500	201	211	222	512	649
56	4.667	201	211	222	515	654
58	4.833	201	211	222	519	659
60	5.000	201	211	222	522	664
66	5.500	201	211	222	531	677
72	6.000	201	211	222	540	690
78	6.500	201	211	222	548	701
84	7.000	201	211	222	555	711
90	7.500	201	211	222	561	720
96	8.000	201	211	222	568	729
102	8.500	201	211	222	568	737
108	9.000	201	211	222	568	745
114	9.500	201	211	222	568	753
120	10.000	201	211	222	568	760
132	11.000	201	211	222	568	760
144	12.000	201	211	222	568	760
156	13.000	201	211	222	568	760
168	14.000	201	211	222	568	760
180	15.000	201	211	222	568	760
192	16.000	201	211	222	568	760
204	17.000	201	211	222	568	760
216	18.000	201	211	222	568	760
228	19.000	201	211	222	568	760
240②	20.000	201	211	222	568	760

Notes:

① Aspiration times for Waste Material Types I.1, I.2, and I.3 are identical.

② For wastes older than 240 months (20 years), the aspiration times for 240 months shall be used.

Table 5.3-2 – Aspiration Times Based on Date of Drum Closure (Waste Material Type II.1)

Age of Waste		By Number of Layers of Confinement (Days)						
(Months)	(Years)	0	1	2	3	4	5	6
1	0.083	0	0	0	0	0	0	0
2	0.167	91	44	0	0	0	0	0
3	0.250	134	141	0	0	0	0	0
4	0.333	155	174	2	0	0	0	0
5	0.417	170	193	12	4	2	0	0
6	0.500	180	208	72	9	7	5	3
7	0.583	189	219	259	14	11	8	6
8	0.667	196	229	341	19	13	12	9
9	0.750	202	237	394	27	16	13	12
10	0.833	208	244	434	49	21	17	15
11	0.917	212	250	464	290	24	19	17
12	1.000	217	256	491	427	29	22	19
14	1.167	224	265	533	582	48	27	23
16	1.333	230	273	565	677	454	35	27
18	1.500	236	280	592	749	678	49	34
20	1.667	241	286	615	804	815	423	39
22	1.833	245	292	634	848	913	727	51
24	2.000	249	297	651	887	991	910	345
26	2.167	253	301	666	919	1055	1041	739
28	2.333	256	306	680	948	1110	1144	971
30	2.500	260	310	693	975	1157	1228	1136
32	2.667	262	313	706	997	1199	1298	1264
34	2.833	265	317	717	1021	1236	1359	1369
36	3.000	268	320	727	1041	1270	1414	1457
38	3.167	270	323	737	1059	1298	1463	1531
40	3.333	272	326	745	1074	1329	1507	1600
42	3.500	275	328	754	1091	1355	1547	1660
44	3.667	277	331	762	1107	1379	1582	1715
46	3.833	279	333	769	1122	1402	1618	1765
48	4.000	279	336	777	1135	1424	1650	1810

Age of Waste		By Number of Layers of Confinement (Days)						
(Months)	(Years)	0	1	2	3	4	5	6
50	4.167	279	338	784	1147	1444	1680	1851
52	4.333	279	340	791	1159	1463	1708	1892
54	4.500	279	340	797	1171	1479	1734	1929
56	4.667	279	340	803	1182	1498	1759	1963
58	4.833	279	340	809	1192	1515	1783	1996
60	5.000	279	340	815	1203	1530	1805	2027
66	5.500	279	340	831	1232	1572	1865	2110
72	6.000	279	340	845	1258	1613	1919	2183
78	6.500	279	340	858	1282	1646	1970	2247
84	7.000	279	340	870	1303	1678	2014	2306
90	7.500	279	340	881	1323	1709	2055	2358
96	8.000	279	340	892	1341	1737	2092	2407
102	8.500	279	340	892	1359	1762	2126	2451
108	9.000	279	340	892	1375	1785	2157	2493
114	9.500	279	340	892	1390	1808	2188	2531
120	10.000	279	340	892	1404	1829	2216	2567
132	11.000	279	340	892	1430	1868	2268	2633
144	12.000	279	340	892	1430	1903	2315	2692
156	13.000	279	340	892	1430	1935	2358	2746
168	14.000	279	340	892	1430	1963	2397	2795
180	15.000	279	340	892	1430	1963	2433	2842
192	16.000	279	340	892	1430	1963	2467	2885
204	17.000	279	340	892	1430	1963	2499	2924
216	18.000	279	340	892	1430	1963	2528	2960
228	19.000	279	340	892	1430	1963	2528	2995
240①	20.000	279	340	892	1430	1963	2528	3028

Note:

① For wastes older than 240 months (20 years), the aspiration times for 240 months shall be used.

Table 5.3-3 – Aspiration Times Based on Date of Drum Closure (Waste Type III①)

Age of Waste		By Number of Layers of Confinement (Days)						
(Months)	(Years)	0	1	2	3	4	5	6
1	0.083	0	0	0	0	0	0	0
2	0.167	94	73	0	0	0	0	0
3	0.250	130	138	0	0	0	0	0
4	0.333	149	165	9	3	0	0	0
5	0.417	162	182	28	9	6	4	2
6	0.500	172	195	193	16	11	8	6
7	0.583	179	205	285	23	15	12	10
8	0.667	186	213	338	32	20	16	13
9	0.750	191	220	376	60	24	19	17
10	0.833	196	226	406	274	30	23	20
11	0.917	201	232	430	392	36	26	23
12	1.000	205	237	450	468	46	30	25
14	1.167	212	245	483	570	338	39	31
16	1.333	218	252	509	639	571	56	38
18	1.500	223	259	531	691	703	382	46
20	1.667	227	264	550	733	795	653	63
22	1.833	231	269	566	769	865	813	419
24	2.000	235	274	581	799	923	927	721
26	2.167	238	278	594	825	971	1016	907
28	2.333	242	281	605	849	1013	1088	1042
30	2.500	244	285	616	870	1049	1149	1147
32	2.667	247	288	626	890	1082	1202	1234
34	2.833	250	291	635	907	1111	1249	1307
36	3.000	252	294	644	924	1138	1290	1371
38	3.167	254	297	652	939	1163	1328	1427
40	3.333	256	299	660	953	1186	1362	1477
42	3.500	258	302	667	966	1207	1394	1523
44	3.667	258	304	673	979	1227	1423	1565
46	3.833	258	306	680	991	1245	1450	1603

Age of Waste		By Number of Layers of Confinement (Days)						
(Months)	(Years)	0	1	2	3	4	5	6
48	4.000	258	309	686	1002	1263	1476	1638
50	4.167	258	309	692	1013	1279	1499	1672
52	4.333	258	309	698	1023	1295	1522	1702
54	4.500	258	309	703	1033	1310	1543	1732
56	4.667	258	309	708	1042	1324	1563	1759
58	4.833	258	309	713	1051	1338	1583	1785
60	5.000	258	309	718	1060	1351	1601	1810
66	5.500	258	309	731	1083	1387	1651	1877
72	6.000	258	309	743	1105	1419	1696	1936
78	6.500	258	309	755	1125	1449	1736	1989
84	7.000	258	309	765	1143	1475	1773	2036
90	7.500	258	309	765	1159	1500	1806	2079
96	8.000	258	309	765	1175	1523	1837	2119
102	8.500	258	309	765	1189	1544	1866	2156
108	9.000	258	309	765	1203	1564	1893	2190
114	9.500	258	309	765	1216	1583	1918	2222
120	10.000	258	309	765	1228	1600	1942	2253
132	11.000	258	309	765	1228	1633	1985	2308
144	12.000	258	309	765	1228	1662	2024	2358
156	13.000	258	309	765	1228	1689	2060	2403
168	14.000	258	309	765	1228	1689	2093	2444
180	15.000	258	309	765	1228	1689	2124	2483
192	16.000	258	309	765	1228	1689	2152	2518
204	17.000	258	309	765	1228	1689	2152	2552
216	18.000	258	309	765	1228	1689	2152	2583
228	19.000	258	309	765	1228	1689	2152	2612
240②	20.000	258	309	765	1228	1689	2152	2612

Notes:

① Aspiration times for Waste Material Types III.1, III.2, and III.3 are identical.

② For wastes older than 240 months (20 years), the aspiration times for 240 months shall be used.

Table 5.3-4 – Aspiration Times Based on Container Headspace Gas Sampling at Time of Venting (Waste Type I①)

Mol % H_2 in headspace	By Number of Layers of Confinement (Days)				
	0	1	2	3	4
0.1	33	40	45	22	23
0.2	79	86	91	65	49
0.3	94	101	107	156	90
0.4	103	109	116	207	192
0.5	109	116	123	236	254
0.6	114	121	128	257	292
0.7	117	124	132	273	320
0.8	121	128	135	285	342
0.9	123	131	138	296	359
1	126	133	141	305	374
1.1	128	135	143	313	387
1.2	130	137	145	320	398
1.3	131	139	147	326	408
1.4	133	141	149	332	417
1.5	134	142	150	337	425
1.6	136	144	152	342	432
1.7	137	145	153	347	439
1.8	138	146	154	351	445
1.9	139	147	155	355	451
2	140	148	157	358	457
2.1	141	149	158	362	462
2.2	142	150	159	365	467
2.3	143	151	160	368	472
2.4	144	152	161	371	476
2.5	145	153	162	374	480
2.6	146	154	162	377	484
2.7	146	155	163	379	488
2.8	147	155	164	382	492
2.9	148	156	165	384	495

Mol % H_2 in headspace	By Number of Layers of Confinement (Days)				
	0	1	2	3	4
3	149	157	166	386	499
3.1	149	158	166	389	502
3.2	150	158	167	391	505
3.3	150	159	168	393	508
3.4	151	159	168	395	511
3.5	152	160	169	397	514
3.6	152	161	169	399	517
3.7	153	161	170	400	519
3.8	153	162	171	402	522
3.9	154	162	171	404	524
4	154	163	172	405	527
4.1	155	163	172	407	529
4.2	155	164	173	409	532
4.3	156	164	173	410	534
4.4	156	165	174	412	536
4.5	156	165	174	413	538
4.6	157	166	175	415	540
4.7	157	166	175	416	542
4.8	158	166	176	417	544
4.9	158	167	176	419	546
5	158	167	176	420	548
6	162	171	180	432	565
7	165	174	184	442	580
8	168	177	186	450	593
9	170	179	189	458	604
10	172	181	191	465	614
11	174	183	193	471	623
12	175	185	195	477	631
13	177	187	197	482	639
14	178	188	198	487	646
15	180	189	200	491	653

Mol % H_2 in headspace	By Number of Layers of Confinement (Days)				
	0	1	2	3	4
16	181	191	201	496	660
17	182	192	203	500	666
18	183	193	204	504	671
19	184	194	205	507	677
20	185	195	206	511	682
21	186	196	207	514	687
22	187	197	208	518	692
23	188	198	209	521	697
24	189	199	210	524	701
25	190	200	211	527	706
26	191	201	212	530	710
27	191	202	213	532	714
28	192	203	214	535	718
29	193	203	214	538	722
30	193	204	215	540	725
35	197	207	219	552	742
40	199	210	222	562	758

Note:

① Aspiration times for Waste Material Types I.1, I.2 and I.3 are identical.

This page intentionally left blank.

Table 5.3-5 – Aspiration Times Based on Container Headspace Gas Sampling at Time of Venting (Waste Material Type II.1)

Mol % H_2 in headspace	By Number of Layers of Confinement (Days)						
	0	1	2	3	4	5	6
0.1	52	0	1	1	2	4	5
0.2	112	119	4	7	9	10	12
0.3	132	149	14	13	14	16	17
0.4	143	165	57	18	19	19	20
0.5	152	177	215	24	22	22	22
0.6	158	185	287	34	26	25	26
0.7	164	192	333	106	31	29	28
0.8	168	199	366	287	38	32	31
0.9	171	203	392	389	51	36	35
1	174	207	413	459	221	42	37
1.1	177	210	431	511	393	51	41
1.2	179	214	446	554	506	140	47
1.3	182	216	460	589	590	384	55
1.4	184	219	471	619	657	541	126
1.5	186	223	483	646	711	655	410
1.6	187	224	493	668	758	745	596
1.7	189	226	502	688	798	820	734
1.8	191	228	509	707	834	882	844
1.9	192	230	516	725	865	937	934
2	194	232	525	742	894	985	1011
2.1	195	235	532	756	918	1027	1078
2.2	196	237	538	769	942	1066	1137
2.3	198	237	544	782	964	1101	1189
2.4	199	240	550	794	985	1131	1237
2.5	200	240	555	806	1006	1163	1281
2.6	201	243	560	816	1023	1189	1321
2.7	202	244	565	826	1040	1215	1358
2.8	203	244	570	835	1056	1239	1392
2.9	204	245	574	844	1071	1262	1422

Mol % H_2 in headspace	By Number of Layers of Confinement (Days)						
	0	1	2	3	4	5	6
3	205	248	579	853	1086	1285	1454
3.1	206	249	583	861	1099	1305	1481
3.2	207	249	587	869	1112	1324	1508
3.3	208	250	590	877	1125	1342	1533
3.4	209	251	594	885	1137	1360	1558
3.5	209	252	598	892	1148	1377	1582
3.6	210	253	601	899	1159	1393	1603
3.7	211	254	604	905	1170	1407	1624
3.8	212	255	608	911	1180	1423	1644
3.9	212	256	611	917	1190	1437	1663
4	213	258	614	923	1199	1451	1682
4.1	214	258	617	929	1208	1464	1700
4.2	214	258	620	934	1217	1477	1717
4.3	215	259	622	940	1226	1489	1733
4.4	216	260	625	945	1234	1501	1750
4.5	216	261	628	950	1242	1513	1766
4.6	217	261	630	955	1250	1524	1780
4.7	218	262	633	960	1258	1535	1795
4.8	218	263	635	965	1265	1546	1809
4.9	219	264	638	969	1273	1556	1823
5	219	264	640	974	1280	1566	1837
6	224	271	661	1013	1340	1655	1953
7	229	276	679	1046	1394	1727	2047
8	233	281	694	1075	1436	1788	2127
9	236	285	705	1100	1475	1838	2195
10	239	289	718	1123	1509	1887	2256
11	241	293	729	1143	1540	1929	2310
12	244	296	740	1161	1568	1967	2359
13	246	298	750	1178	1594	2002	2404
14	248	301	756	1194	1617	2035	2446
15	250	302	764	1208	1639	2065	2484
16	252	306	772	1222	1660	2094	2521

Mol % H_2 in headspace	By Number of Layers of Confinement (Days)						
	0	1	2	3	4	5	6
17	254	308	779	1235	1680	2120	2555
18	255	310	785	1247	1698	2145	2587
19	257	312	791	1258	1715	2169	2618
20	258	312	797	1269	1732	2192	2647
21	260	314	803	1280	1748	2214	2674
22	261	317	808	1290	1763	2234	2701
23	262	317	813	1300	1778	2254	2726
24	263	320	818	1309	1792	2273	2750
25	264	320	823	1318	1805	2291	2773
26	266	323	828	1327	1818	2309	2795
27	267	323	832	1335	1830	2326	2816
28	268	324	837	1343	1842	2342	2837

This page intentionally left blank.

Table 5.3-6 – Aspiration Times Based on Container Headspace Gas Sampling at Time of Venting (Waste Type III①)

Mol % H_2 in headspace	By Number of Layers of Confinement (Days)						
	0	1	2	3	4	5	6
0.1	56	23	0	4	6	8	9
0.2	107	116	12	13	15	16	17
0.3	125	141	32	21	21	21	22
0.4	135	155	169	29	26	26	26
0.5	143	164	246	41	32	30	30
0.6	149	172	291	137	39	35	34
0.7	153	178	323	284	49	40	38
0.8	157	183	346	367	99	46	42
0.9	161	187	366	425	302	56	47
1.0	164	191	382	469	422	99	54
1.1	166	194	395	504	505	333	65
1.2	169	197	407	533	568	479	161
1.3	171	200	418	558	619	583	403
1.4	173	203	427	580	662	664	561
1.5	175	205	436	599	698	729	678
1.6	176	207	444	616	730	784	771
1.7	178	209	451	632	758	831	847
1.8	180	211	458	646	784	873	912
1.9	181	213	464	659	807	909	968
2.0	182	214	470	672	828	943	1018
2.1	184	216	475	683	847	973	1062
2.2	185	217	480	693	865	1000	1102
2.3	186	219	485	703	881	1026	1139
2.4	187	220	490	713	897	1049	1172
2.5	188	221	494	721	912	1071	1203
2.6	189	223	498	730	925	1092	1232
2.7	190	224	502	738	938	1111	1259
2.8	191	225	506	745	951	1129	1284
2.9	192	226	510	752	962	1146	1307

Mol % H_2 in headspace	By Number of Layers of Confinement (Days)						
	0	1	2	3	4	5	6
3	193	227	513	759	793	1163	1330
3.1	194	228	516	766	984	1178	1351
3.2	194	229	520	772	994	1193	1371
3.3	195	230	523	778	1004	1207	1390
3.4	196	231	526	784	1013	1220	1409
3.5	197	232	529	790	1022	1233	1426
3.6	197	233	532	795	1031	1246	1443
3.7	198	233	534	801	1039	1258	1459
3.8	199	234	537	806	1047	1269	1474
3.9	199	235	539	811	1055	1280	1489
4	200	236	542	815	1063	1291	1503
4.1	201	237	544	820	1070	1302	1517
4.2	201	237	547	825	1077	1312	1531
4.3	202	238	549	829	1084	1321	1544
4.4	202	239	551	833	1091	1331	1556
4.5	203	239	554	837	1097	1340	1568
4.6	203	240	556	841	1103	1349	1580
4.7	204	241	558	845	1109	1358	1592
4.8	204	241	560	849	1115	1366	1603
4.9	205	242	562	853	1121	1374	1614
5	205	243	564	857	1127	1382	1624
6	210	248	581	889	1178	1453	1717
7	214	253	596	917	1219	1511	1793
8	217	257	608	940	1255	1561	1857
9	220	260	619	961	1286	1604	1913
10	223	264	629	979	1314	1642	1962
11	225	266	638	995	1339	1677	2006
12	227	269	647	1010	1362	1708	2047
13	229	272	654	1024	1383	1737	2084
14	231	274	661	1037	1403	1764	2119
15	233	276	668	1049	1421	1789	2151
16	235	278	674	1061	1438	1812	2181

Mol % H_2 in headspace	By Number of Layers of Confinement (Days)						
	0	1	2	3	4	5	6
17	236	280	680	1071	1454	1834	2209
18	238	282	685	1082	1470	1855	2236
19	239	283	690	1091	1484	1875	2261
20	240	285	695	1100	1498	1894	2285
21	241	286	700	1109	1511	1912	2308
22	243	288	705	1118	1524	1929	2330
23	244	289	709	1126	1536	1945	2351
24	245	291	713	1133	1548	1961	2371
25	246	292	717	1141	1559	1977	2390
26	247	293	721	1148	1570	1991	2409
27	248	294	725	1155	1580	2005	2427
28	249	296	729	1162	1591	2019	2444
29	250	297	732	1168	1600	2032	2460
30	251	298	736	1175	1610	2045	2477
35	255	303	752	1204	1653	2104	2550
40	259	307	766	1230	1692	2155	2615

Note:

① Aspiration times for Waste Material Types III.1, III.2, and III.3 are identical.

This page intentionally left blank.

Table 5.3-7 – Aspiration Times Based on Rigid Liner Headspace Gas Sampling at Time of Venting (Waste Type I①)

Mol % H_2 in rigid liner	By Number of Layers of Confinement (Days)				
	0	1	2	3	4
1	0	0	0	0	6
2	0	0	0	28	40
3	0	0	0	113	141
4	21	47	62	218	291
5	63	77	88	267	360
6	81	93	103	300	406
7	92	103	113	324	439
8	101	111	121	344	467
9	107	118	128	360	489
10	113	123	133	374	508
11	117	128	138	386	525
12	121	132	142	397	540
13	125	136	146	407	554
14	128	139	149	416	566
15	131	142	153	424	577
16	134	145	155	432	588
17	136	147	158	439	597
18	139	150	161	445	606
19	141	152	163	451	615
20	143	154	165	457	623
21	145	156	167	463	630
22	147	158	169	468	637
23	149	160	171	473	644
24	150	161	173	477	651
25	152	163	175	482	657
26	153	165	176	486	663
27	155	166	178	490	668
28	156	168	179	494	674
29	158	169	181	498	679

Mol % H_2 in rigid liner	By Number of Layers of Confinement (Days)				
	0	1	2	3	4
30	159	170	182	502	684
31	160	172	183	505	689
32	161	173	185	509	693
33	162	174	186	512	698
34	164	175	187	515	702
35	165	176	188	518	706
36	166	177	189	521	711
37	167	178	191	524	715
38	168	180	192	527	718
39	169	181	193	530	722
40	170	182	194	532	726
41	171	182	195	535	729
42	171	183	196	537	733
43	172	184	197	540	736
44	173	185	198	542	739
45	174	186	199	544	743
46	175	187	199	547	746
47	176	188	200	549	749
48	176	189	201	551	752
49	177	189	202	553	755
50	178	190	203	555	758
51	179	191	204	557	761
52	179	192	204	559	763
53	180	192	205	561	766
54	181	193	206	563	769
55	181	194	207	565	771
56	182	195	207	567	774
57	183	195	208	569	776
58	183	196	209	571	779
59	184	197	209	572	781
60	185	197	210	574	784
61	185	198	211	576	786

Mol % H_2 in rigid liner	By Number of Layers of Confinement (Days)				
	0	1	2	3	4
62	186	198	211	577	788
63	186	199	212	579	790
64	187	200	213	581	793
65	188	200	213	582	795
66	188	201	214	584	797
67	189	201	215	585	799
68	189	202	215	587	801
69	190	203	216	588	803
70	190	203	216	590	805
71	191	204	217	591	807
72	191	204	217	593	809
73	192	205	218	594	811
74	192	205	218	595	813
75	193	206	219	597	815
76	193	206	220	598	817
77	194	207	220	599	819
78	194	207	221	601	820
79	195	208	221	602	822
80	195	208	222	603	824
81	196	209	222	605	826
82	196	209	223	606	827
83	197	210	223	607	829
84	197	210	224	608	831
85	198	210	224	609	832
86	198	211	224	611	834
87	198	211	225	612	836
88	199	212	225	613	837
89	199	212	226	614	839
90	200	213	226	615	840
91	200	213	227	616	842
92	200	214	227	617	843
93	201	214	228	619	845

Mol % H_2 in rigid liner	By Number of Layers of Confinement (Days)				
	0	1	2	3	4
94	201	214	228	620	846
95	202	215	228	621	848
96	202	215	229	622	849
97	202	216	229	623	851
98	203	216	230	624	852
99	203	216	230	625	853
100	203	217	230	626	855

Note:

① Aspiration times for Waste Material Types I.1, I.2, and I.3 are identical.

Table 5.3-8 – Aspiration Times Based on Rigid Liner Headspace Gas Sampling at Time of Venting (Waste Material Type II.1)

Mol % H_2 in rigid liner	By Number of Layers of Confinement (Days)						
	0	1	2	3	4	5	6
1	0	0	0	0	0	3	6
2	0	0	0	6	12	16	19
3	54	44	10	19	24	28	31
4	105	123	173	121	67	64	65
5	128	154	337	499	662	829	1001
6	143	173	415	647	881	1117	1356
7	154	188	466	741	1017	1295	1573
8	163	199	505	810	1116	1423	1730
9	171	208	536	865	1194	1523	1853
10	177	216	562	910	1258	1606	1955
11	182	223	584	948	1312	1676	2041
12	187	229	604	981	1359	1737	2115
13	192	235	621	1011	1401	1791	2181
14	196	240	636	1038	1439	1840	2241
15	200	245	650	1062	1473	1883	2294
16	203	249	663	1084	1504	1924	2344
17	206	253	675	1104	1533	1961	2389
18	209	257	687	1123	1559	1995	2431
19	212	260	697	1140	1584	2027	2470
20	215	263	707	1157	1607	2057	2507
21	217	266	716	1172	1629	2085	2541
22	219	269	724	1187	1649	2111	2574
23	222	272	733	1201	1669	2137	2605
24	224	275	740	1214	1687	2160	2634
25	226	277	748	1226	1705	2183	2662
26	228	280	755	1238	1722	2205	2689
27	230	282	762	1250	1738	2226	2714
28	231	284	768	1261	1753	2245	2738
29	233	286	774	1271	1768	2265	2762

Mol % H_2 in rigid liner	By Number of Layers of Confinement (Days)						
	0	1	2	3	4	5	6
30	235	289	780	1281	1782	2283	2784
31	236	291	786	1291	1796	2301	2806
32	238	292	792	1300	1809	2318	2827
33	240	294	797	1309	1822	2334	2847
34	241	296	802	1318	1834	2350	2867
35	242	298	807	1327	1846	2365	2885
36	244	300	812	1335	1858	2380	2904
37	245	301	817	1343	1869	2395	2921
38	246	303	822	1350	1880	2409	2939
39	248	304	826	1358	1890	2422	2955
40	249	306	830	1365	1901	2436	2972
41	250	307	835	1372	1911	2448	2987
42	251	309	839	1379	1920	2461	3003
43	252	310	843	1386	1930	2473	3018
44	253	312	847	1392	1939	2485	3032
45	255	313	850	1399	1948	2497	3047
46	256	314	854	1405	1957	2508	3061
47	257	315	858	1411	1965	2519	3074
48	258	317	861	1417	1974	2530	3087
49	259	318	865	1423	1982	2541	3100
50	260	319	868	1429	1990	2551	3113
51	261	320	871	1434	1998	2561	3126
52	262	321	875	1440	2006	2571	3138
53	262	323	878	1445	2013	2581	3150
54	263	324	881	1450	2020	2590	3161
55	264	325	884	1455	2028	2600	3173
56	265	326	887	1460	2035	2609	3184
57	266	327	890	1465	2042	2618	3195
58	267	328	893	1470	2049	2627	3206
59	268	329	896	1475	2055	2635	3217
60	268	330	899	1480	2062	2644	3227
61	269	331	901	1484	2068	2652	3237

Mol % H_2 in rigid liner	By Number of Layers of Confinement (Days)						
	0	1	2	3	4	5	6
62	270	332	904	1489	2075	2660	3247
63	271	333	907	1493	2081	2669	3257
64	271	334	909	1498	2087	2676	3267
65	272	334	912	1502	2093	2684	3277
66	273	335	914	1506	2099	2692	3286
67	274	336	917	1510	2105	2700	3295
68	274	337	919	1514	2111	2707	3304
69	275	338	922	1518	2116	2714	3313
70	276	339	924	1522	2122	2722	3322
71	276	340	926	1526	2128	2729	3331
72	277	340	929	1530	2133	2736	3340
73	278	341	931	1534	2138	2743	3348
74	278	342	933	1538	2144	2749	3356
75	279	343	935	1541	2149	2756	3365
76	280	344	937	1545	2154	2763	3373
77	280	344	939	1549	2159	2769	3381
78	281	345	942	1552	2164	2776	3389
79	281	346	944	1556	2169	2782	3396
80	282	346	946	1559	2174	2788	3404
81	283	347	948	1563	2179	2794	3412
82	283	348	950	1566	2183	2801	3419
83	284	349	952	1569	2188	2807	3427
84	284	349	954	1572	2193	2813	3434
85	285	350	956	1576	2197	2818	3441
86	285	351	957	1579	2202	2824	3448
87	286	351	959	1582	2206	2830	3455
88	286	352	961	1585	2210	2836	3462
89	287	353	963	1588	2215	2841	3469
90	287	353	965	1591	2219	2847	3476
91	288	354	967	1594	2223	2852	3483
92	288	354	968	1597	2228	2858	3489
93	289	355	970	1600	2232	2863	3496

Mol % H_2 in rigid liner	By Number of Layers of Confinement (Days)						
	0	1	2	3	4	5	6
94	289	356	972	1603	2236	2868	3502
95	290	356	974	1606	2240	2874	3509
96	290	357	975	1609	2244	2879	3515
97	291	358	977	1612	2248	2884	3521
98	291	358	979	1614	2252	2889	3528
99	292	359	980	1617	2256	2894	3534
100	292	359	982	1620	2260	2899	3540

Table 5.3-9 – Aspiration Times Based on Rigid Liner Headspace Gas Sampling at Time of Venting (Waste Type III①)

Mol % H_2 in rigid liner	By Number of Layers of Confinement (Days)						
	0	1	2	3	4	5	6
1	0	0	0	0	2	6	10
2	0	0	2	11	17	21	25
3	46	46	19	27	33	37	40
4	96	113	196	231	259	296	343
5	118	140	310	468	626	788	953
6	132	158	371	580	791	1004	1218
7	143	171	413	655	898	1143	1389
8	151	181	445	711	978	1246	1515
9	158	189	470	755	1041	1328	1615
10	164	196	492	793	1094	1396	1698
11	169	203	510	824	1139	1454	1769
12	174	208	527	852	1179	1505	1831
13	178	213	541	877	1213	1550	1886
14	181	218	554	899	1245	1590	1936
15	185	222	566	920	1273	1627	1981
16	188	226	577	938	1299	1661	2022
17	191	229	588	955	1324	1692	2060
18	194	233	597	971	1346	1720	2095
19	196	236	606	986	1367	1747	2128
20	199	239	614	1000	1386	1773	2159
21	201	242	622	1013	1405	1796	2188
22	203	244	629	1025	1422	1819	2216
23	205	247	636	1037	1439	1840	2242
24	207	249	643	1048	1454	1860	2266
25	209	251	649	1059	1469	1879	2290
26	211	254	655	1069	1484	1898	2313
27	213	256	661	1079	1497	1915	2334
28	215	258	667	1088	1510	1932	2355
29	216	260	672	1097	1523	1948	2375

Mol % H_2 in rigid liner	By Number of Layers of Confinement (Days)						
	0	1	2	3	4	5	6
30	218	262	677	1106	1535	1964	2394
31	219	263	682	1114	1546	1979	2412
32	221	265	687	1122	1558	1993	2430
33	222	267	692	1130	1568	2007	2447
34	224	268	696	1137	1579	2021	2463
35	225	270	700	1144	1589	2034	2479
36	226	272	704	1151	1599	2046	2495
37	227	273	709	1158	1608	2059	2510
38	229	275	712	1164	1618	2071	2525
39	230	276	716	1171	1627	2082	2539
40	231	277	720	1177	1635	2093	2552
41	232	279	724	1183	1644	2104	2566
42	233	280	727	1189	1652	2115	2579
43	234	281	731	1195	1660	2125	2592
44	235	282	734	1200	1668	2136	2604
45	236	284	737	1206	1676	2145	2616
46	237	285	740	1211	1683	2155	2628
47	238	286	743	1216	1690	2165	2640
48	239	287	746	1221	1698	2174	2651
49	240	288	749	1226	1705	2183	2662
50	241	289	752	1231	1711	2192	2673
51	242	290	755	1236	1718	2200	2683
52	243	291	758	1241	1725	2209	2694
53	244	292	761	1245	1731	2217	2704
54	244	293	763	1250	1737	2225	2714
55	245	294	766	1254	1744	2233	2724
56	246	295	769	1258	1750	2241	2733
57	247	296	771	1263	1755	2249	2743
58	248	297	774	1267	1761	2256	2752
59	248	298	776	1271	1767	2263	2761
60	249	299	778	1275	1773	2271	2770
61	250	300	781	1279	1778	2278	2778

Mol % H_2 in rigid liner	By Number of Layers of Confinement (Days)						
	0	1	2	3	4	5	6
62	251	301	783	1283	1784	2285	2787
63	251	302	785	1286	1789	2292	2796
64	252	302	788	1290	1794	2298	2804
65	253	303	790	1294	1799	2305	2812
66	253	304	792	1297	1804	2312	2820
67	254	305	794	1301	1809	2318	2828
68	255	306	796	1304	1814	2324	2836
69	255	306	798	1308	1819	2331	2843
70	256	307	800	1311	1824	2337	2851
71	257	308	802	1315	1829	2343	2858
72	257	309	804	1318	1833	2349	2866
73	258	309	806	1321	1838	2355	2873
74	258	310	808	1324	1842	2361	2880
75	259	311	810	1327	1847	2366	2887
76	260	311	812	1331	1851	2372	2894
77	260	312	814	1334	1855	2378	2901
78	261	313	815	1337	1860	2383	2907
79	261	314	817	1340	1864	2388	2914
80	262	314	819	1343	1868	2394	2921
81	262	315	821	1346	1872	2399	2927
82	263	315	822	1348	1876	2404	2934
83	263	316	824	1351	1880	2409	2940
84	264	317	826	1354	1884	2414	2946
85	264	317	828	1357	1888	2420	2952
86	265	318	829	1360	1892	2424	2958
87	265	319	831	1362	1896	2429	2964
88	266	319	832	1365	1899	2434	2970
89	266	320	834	1368	1903	2439	2976
90	267	320	835	1370	1907	2444	2982
91	267	321	837	1373	1910	2448	2988
92	268	321	839	1375	1914	2453	2993
93	268	322	840	1378	1918	2458	2999

Mol % H_2 in rigid liner	By Number of Layers of Confinement (Days)						
	0	1	2	3	4	5	6
94	269	323	842	1380	1921	2462	3004
95	269	323	843	1383	1925	2467	3010
96	270	324	844	1385	1928	2471	3015
97	270	324	846	1388	1931	2475	3021
98	271	325	847	1390	1935	2480	3026
99	271	325	849	1392	1938	2484	3031
100	272	326	850	1395	1941	2488	3036

Note:

① Aspiration times for Waste Material Types III.1, III.2, and III.3 are identical.

Table 5.3-10 – Aspiration Times (in Days) Based on Headspace Gas Sampling During Aspiration (Waste Type I①)

mol %	0②	mol %	1②	mol %	2②	mol %	3②	mol %	4②
0.100	0	0.100	0	0.100	0	0.100	0	0.100	0
0.200	0	0.200	0	0.200	0	0.200	0	0.200	0
0.300	0	0.300	0	0.300	0	0.300	0	0.300	0
0.400	0	0.400	0	0.400	0	0.400	0	0.432	0
0.500	0	0.500	0	0.500	0	0.591	0	0.500	6
0.600	0	0.600	0	0.600	0	0.600	1	0.600	13
0.700	0	0.700	0	0.700	0	0.700	8	0.700	19
0.800	0	0.800	0	0.800	0	0.800	15	0.800	26
0.900	0	0.900	0	0.900	0	0.900	21	0.900	32
1.000	0	1.000	0	1.000	0	1.000	28	1.000	38
1.100	0	1.100	0	1.100	0	1.100	36	1.100	45
1.200	0	1.200	0	1.200	0	1.200	45	1.200	53
1.300	0	1.300	0	1.300	0	1.300	56	1.300	64
1.400	0	1.400	0	1.400	0	1.400	74	1.400	78
1.500	0	1.500	0	1.500	0	1.500	100	1.500	104
1.600	0	1.600	0	1.600	0	1.600	130	1.600	146
1.700	0	1.700	0	1.700	0	1.700	155	1.700	185
1.800	0	1.800	0	1.800	0	1.800	175	1.800	215
1.900	0	1.900	0	1.900	0	1.900	191	1.900	240
2.000	0	2.000	0	2.024	0	2.000	205	2.000	261
2.100	0	2.100	0	2.100	36	2.100	218	2.100	278
2.200	0	2.282	0	2.200	50	2.200	228	2.200	294
2.300	0	2.300	16	2.300	60	2.300	238	2.300	308
2.400	0	2.400	34	2.400	68	2.400	246	2.400	320
2.500	0	2.500	45	2.500	74	2.500	254	2.500	331
2.616	0	2.600	54	2.600	79	2.600	261	2.600	342
2.700	17	2.700	60	2.700	83	2.700	268	2.700	351
2.800	30	2.800	66	2.800	87	2.800	274	2.800	360
2.900	39	2.900	71	2.900	91	2.900	280	2.900	368
3.000	46	3.000	75	3.000	94	3.000	286	3.000	376

mol %	0②	mol %	1②	mol %	2②	mol %	3②	mol %	4②
3.100	51	3.100	78	3.100	97	3.100	291	3.100	383
3.200	56	3.200	81	3.200	100	3.200	296	3.200	390
3.300	60	3.300	84	3.300	102	3.300	300	3.300	396
3.400	64	3.400	87	3.400	104	3.400	305	3.400	402
3.500	67	3.500	90	3.500	106	3.500	309	3.500	408
3.600	70	3.600	92	3.600	108	3.600	313	3.600	414
3.700	73	3.700	94	3.700	110	3.700	316	3.700	419
3.800	75	3.800	96	3.800	112	3.800	320	3.800	424
3.900	78	3.900	98	3.900	114	3.900	323	3.900	429
4.000	80	4.000	100	4.000	115	4.000	327	4.000	434
4.100	82	4.100	101	4.100	117	4.100	330	4.100	438
4.200	84	4.200	103	4.200	118	4.200	333	4.200	442
4.300	85	4.300	105	4.300	120	4.300	336	4.300	446
4.400	87	4.400	106	4.400	121	4.400	339	4.400	450
4.500	89	4.500	107	4.500	122	4.500	342	4.500	454
4.600	90	4.600	109	4.600	124	4.600	344	4.600	458
4.700	92	4.700	110	4.700	125	4.700	347	4.700	462
4.800	93	4.800	111	4.800	126	4.800	350	4.800	465
4.900	94	4.900	112	4.900	127	4.900	352	4.900	469
5.000	96	5.000	114	5.000	128	5.000	354	5.000	472
6.000	106	6.000	123	6.000	137	6.000	375	6.000	500
7.000	114	7.000	131	7.000	145	7.000	392	7.000	523
8.000	120	8.000	137	8.000	151	8.000	405	8.000	542
9.000	126	9.000	142	9.000	156	9.000	417	9.000	558
10.000	130	10.000	146	10.000	160	10.000	427	10.000	572
11.000	134	11.000	150	11.000	164	11.000	436	11.000	585
12.000	137	12.000	154	12.000	167	12.000	444	12.000	596
13.000	141	13.000	157	13.000	170	13.000	452	13.000	606
14.000	143	14.000	160	14.000	173	14.000	458	14.000	616
15.000	146	15.000	162	15.000	176	15.000	465	15.000	624
16.000	148	16.000	165	16.000	178	16.000	470	16.000	632
17.000	151	17.000	167	17.000	180	17.000	476	17.000	640
18.000	153	18.000	169	18.000	182	18.000	481	18.000	647

mol %	0②	mol %	1②	mol %	2②	mol %	3②	mol %	4②
19.000	155	19.000	171	19.000	184	19.000	486	19.000	654
20.000	157	20.000	173	20.000	186	20.000	490	20.000	660
21.000	158	21.000	174	21.000	188	21.000	495	21.000	666
22.000	160	22.000	176	22.000	189	22.000	499	22.000	672
23.000	162	23.000	178	23.000	191	23.000	503	23.000	678
24.000	163	24.000	179	24.000	192	24.000	506	24.000	683
25.000	164	25.000	181	25.000	194	25.000	510	25.000	688
26.000	166	26.000	182	26.000	195	26.000	513	26.000	693
27.000	167	27.000	183	27.000	197	27.000	517	27.000	698
28.000	168	28.000	185	28.000	198	28.000	520	28.000	702
29.000	170	29.000	186	29.000	199	29.000	523	29.000	707
30.000	171	30.000	187	30.000	200	30.000	526	30.000	711
35.000	176	35.000	192	35.000	205	35.000	540	35.000	730
40.000	181	40.000	197	40.000	210	40.000	551	40.000	747
45.000	184	45.000	200	45.000	213	45.000	562	45.000	762
50.000	188	50.000	204	50.000	217	50.000	571	50.000	776
55.000	191	55.000	207	55.000	220	55.000	580	55.000	788
60.000	194	60.000	210	60.000	223	60.000	588	60.000	799
65.000	197	65.000	212	65.000	225	65.000	595	65.000	809
70.000	199	70.000	215	70.000	228	70.000	602	70.000	819

Notes:

① Aspiration times for Waste Material Types I.1, I.2, and I.3 are identical.

② Numbers represent the number of layers of confinement.

This page intentionally left blank.

Table 5.3-11 – Aspiration Times (in Days) Based on Headspace Gas Sampling During Aspiration (Waste Material Type II.1)

mol %	0[Φ]	mol %	1[Φ]	mol %	2[Φ]	mol %	3[Φ]	mol %	4[Φ]	mol %	5[Φ]	mol %	6[Φ]
0.100	0	0.100	0	0.100	0	0.100	0	0.100	0	0.100	0	0.100	0
0.200	0	0.200	0	0.200	0	0.200	0	0.200	0	0.200	0	0.265	0
0.300	0	0.300	0	0.300	0	0.300	0	0.300	0	0.320	0	0.300	2
0.400	0	0.400	0	0.400	0	0.400	0	0.403	0	0.400	4	0.400	6
0.500	0	0.500	0	0.500	0	0.546	0	0.500	4	0.500	8	0.500	10
0.600	0	0.600	0	0.600	0	0.600	2	0.600	8	0.600	11	0.600	13
0.700	0	0.700	0	0.700	0	0.700	5	0.700	9	0.700	12	0.700	16
0.800	0	0.800	0	0.846	0	0.800	7	0.800	13	0.800	16	0.800	18
0.900	0	0.900	0	0.900	2	0.900	10	0.900	14	0.900	18	0.900	20
1.000	0	1.000	0	1.000	5	1.000	13	1.000	16	1.000	20	1.000	21
1.100	0	1.100	0	1.100	9	1.100	15	1.100	20	1.100	22	1.100	24
1.200	0	1.200	0	1.200	13	1.200	18	1.200	21	1.200	23	1.200	26
1.300	0	1.300	0	1.300	19	1.300	22	1.300	24	1.300	26	1.300	27
1.400	0	1.400	0	1.400	31	1.400	25	1.400	26	1.400	28	1.400	31
1.500	0	1.500	0	1.500	109	1.500	30	1.500	30	1.500	31	1.500	33
1.600	0	1.600	0	1.600	183	1.600	38	1.600	33	1.600	33	1.600	35
1.700	0	1.700	0	1.700	232	1.700	71	1.700	39	1.700	37	1.700	37
1.800	0	1.874	0	1.800	269	1.800	212	1.800	47	1.800	42	1.800	40
1.900	0	1.900	30	1.900	299	1.900	304	1.900	97	1.900	47	1.900	44
2.000	0	2.000	62	2.000	323	2.000	371	2.000	275	2.000	59	2.000	49
2.192	0	2.100	82	2.100	344	2.100	424	2.100	395	2.100	200	2.100	57
2.200	4	2.200	96	2.200	362	2.200	467	2.200	483	2.200	385	2.200	122
2.300	33	2.300	107	2.300	378	2.300	503	2.300	554	2.300	517	2.300	374
2.400	49	2.400	116	2.400	393	2.400	535	2.400	612	2.400	619	2.400	547
2.500	61	2.500	124	2.500	406	2.500	563	2.500	662	2.500	701	2.500	680
2.600	71	2.600	131	2.600	417	2.600	588	2.600	706	2.600	771	2.600	786
2.700	78	2.700	137	2.700	430	2.700	611	2.700	744	2.700	831	2.700	875
2.800	85	2.800	142	2.800	439	2.800	631	2.800	778	2.800	884	2.800	952
2.900	90	2.900	147	2.900	448	2.900	648	2.900	810	2.900	931	2.900	1019
3.000	95	3.000	151	3.000	457	3.000	667	3.000	838	3.000	971	3.000	1078
3.100	100	3.100	155	3.100	465	3.100	684	3.100	864	3.100	1010	3.100	1132
3.200	104	3.200	159	3.200	473	3.200	700	3.200	890	3.200	1047	3.200	1180
3.300	108	3.300	163	3.300	480	3.300	715	3.300	910	3.300	1080	3.300	1225
3.400	111	3.400	166	3.400	487	3.400	726	3.400	930	3.400	1110	3.400	1267
3.500	114	3.500	169	3.500	494	3.500	739	3.500	950	3.500	1139	3.500	1303

mol %	0Φ	mol %	1Φ	mol %	2Φ	mol %	3Φ	mol %	4Φ	mol %	5Φ	mol %	6Φ
3.600	117	3.600	172	3.600	501	3.600	751	3.600	968	3.600	1163	3.600	1340
3.700	120	3.700	175	3.700	506	3.700	762	3.700	986	3.700	1188	3.700	1373
3.800	123	3.800	178	3.800	511	3.800	773	3.800	1003	3.800	1213	3.800	1404
3.900	125	3.900	180	3.900	516	3.900	783	3.900	1019	3.900	1236	3.900	1431
4.000	127	4.000	183	4.000	523	4.000	793	4.000	1035	4.000	1257	4.000	1459
4.100	130	4.100	185	4.100	528	4.100	802	4.100	1049	4.100	1278	4.100	1486
4.200	132	4.200	187	4.200	532	4.200	811	4.200	1063	4.200	1298	4.200	1512
4.300	134	4.300	189	4.300	537	4.300	822	4.300	1077	4.300	1316	4.300	1536
4.400	136	4.400	191	4.400	542	4.400	830	4.400	1090	4.400	1334	4.400	1559
4.500	137	4.500	193	4.500	546	4.500	838	4.500	1102	4.500	1351	4.500	1582
4.600	139	4.600	195	4.600	550	4.600	845	4.600	1114	4.600	1367	4.600	1603
4.700	141	4.700	197	4.700	554	4.700	852	4.700	1125	4.700	1380	4.700	1624
4.800	142	4.800	199	4.800	558	4.800	859	4.800	1136	4.800	1395	4.800	1643
4.900	144	4.900	200	4.900	562	4.900	865	4.900	1147	4.900	1412	4.900	1662
5.000	145	5.000	202	5.000	566	5.000	872	5.000	1157	5.000	1426	5.000	1680
6.000	158	6.000	216	6.000	598	6.000	930	6.000	1242	6.000	1540	6.000	1830
7.000	168	7.000	226	7.000	623	7.000	975	7.000	1307	7.000	1633	7.000	1947
8.000	176	8.000	237	8.000	644	8.000	1010	8.000	1365	8.000	1708	8.000	2042
9.000	182	9.000	243	9.000	662	9.000	1043	9.000	1411	9.000	1771	9.000	2122
10.000	188	10.000	250	10.000	678	10.000	1073	10.000	1452	10.000	1826	10.000	2192
11.000	193	11.000	256	11.000	692	11.000	1096	11.000	1488	11.000	1875	11.000	2254
12.000	197	12.000	261	12.000	706	12.000	1119	12.000	1521	12.000	1918	12.000	2309
13.000	202	13.000	267	13.000	716	13.000	1139	13.000	1549	13.000	1956	13.000	2359
14.000	205	14.000	271	14.000	726	14.000	1157	14.000	1577	14.000	1995	14.000	2404
15.000	209	15.000	276	15.000	736	15.000	1174	15.000	1604	15.000	2028	15.000	2448
16.000	212	16.000	280	16.000	745	16.000	1190	16.000	1626	16.000	2059	16.000	2487
17.000	215	17.000	284	17.000	753	17.000	1205	17.000	1648	17.000	2088	17.000	2524
18.000	218	18.000	287	18.000	761	18.000	1219	18.000	1668	18.000	2116	18.000	2558
19.000	221	19.000	290	19.000	768	19.000	1232	19.000	1687	19.000	2142	19.000	2591
20.000	224	20.000	293	20.000	775	20.000	1244	20.000	1706	20.000	2166	20.000	2622
21.000	226	21.000	296	21.000	782	21.000	1256	21.000	1723	21.000	2189	21.000	2651
22.000	229	22.000	299	22.000	788	22.000	1267	22.000	1740	22.000	2211	22.000	2679
23.000	231	23.000	300	23.000	794	23.000	1278	23.000	1756	23.000	2233	23.000	2705
24.000	233	24.000	302	24.000	800	24.000	1288	24.000	1771	24.000	2253	24.000	2731
25.000	235	25.000	306	25.000	806	25.000	1298	25.000	1785	25.000	2272	25.000	2755
26.000	237	26.000	308	26.000	811	26.000	1308	26.000	1799	26.000	2291	26.000	2778
27.000	239	27.000	309	27.000	816	27.000	1317	27.000	1813	27.000	2309	27.000	2801
28.000	241	28.000	312	28.000	821	28.000	1325	28.000	1825	28.000	2326	28.000	2822

mol %	0①	mol %	1①	mol %	2①	mol %	3①	mol %	4①	mol %	5①	mol %	6①
29.000	242	29.000	312	29.000	826	29.000	1334	29.000	1838	29.000	2342	29.000	2843
30.000	244	30.000	314	30.000	831	30.000	1342	30.000	1850	30.000	2359	30.000	2863
35.000	250	35.000	324	35.000	852	35.000	1380	35.000	1904	35.000	2431	35.000	2953
40.000	256	40.000	330	40.000	870	40.000	1412	40.000	1953	40.000	2495	40.000	3033
45.000	263	45.000	335	45.000	886	45.000	1441	45.000	1995	45.000	2550	45.000	3102
50.000	266	50.000	339	50.000	901	50.000	1467	50.000	2033	50.000	2600	50.000	3164
55.000	271	55.000	343	55.000	914	55.000	1491	55.000	2067	55.000	2645	55.000	3219
60.000	275	60.000	346	60.000	927	60.000	1513	60.000	2098	60.000	2686	60.000	3270
65.000	278	65.000	351	65.000	938	65.000	1533	65.000	2127	65.000	2724	65.000	3317
70.000	281	70.000	354	70.000	948	70.000	1551	70.000	2154	70.000	2759	70.000	3360

Note:

① Numbers represent the number of layers of confinement.

This page intentionally left blank.

Table 5.3-12 – Aspiration Times (in Days) Based on Headspace Gas Sampling During Aspiration (Waste Type III①)

mol %	0②	mol %	1②	mol %	2②	mol %	3②	mol %	4②	mol %	5②	mol %	6②
0.100	0	0.100	0	0.100	0	0.100	0	0.100	0	0.100	0	0.100	0
0.200	0	0.200	0	0.200	0	0.200	0	0.200	0	0.200	0	0.265	0
0.300	0	0.300	0	0.300	0	0.300	0	0.300	0	0.320	0	0.300	3
0.400	0	0.400	0	0.400	0	0.400	0	0.403	0	0.400	4	0.400	7
0.500	0	0.500	0	0.500	0	0.546	0	0.500	4	0.500	8	0.500	11
0.600	0	0.600	0	0.600	0	0.600	2	0.600	8	0.600	11	0.600	14
0.700	0	0.700	0	0.700	0	0.700	5	0.700	11	0.700	14	0.700	17
0.800	0	0.800	0	0.846	0	0.800	8	0.800	13	0.800	17	0.800	20
0.900	0	0.900	0	0.900	2	0.900	11	0.900	16	0.900	20	0.900	22
1.000	0	1.000	0	1.000	5	1.000	14	1.000	19	1.000	22	1.000	25
1.100	0	1.100	0	1.100	8	1.100	17	1.100	21	1.100	25	1.100	27
1.200	0	1.200	0	1.200	12	1.200	20	1.200	24	1.200	27	1.200	29
1.300	0	1.300	0	1.300	16	1.300	23	1.300	27	1.300	30	1.300	32
1.400	0	1.400	0	1.400	21	1.400	26	1.400	30	1.400	32	1.400	34
1.500	0	1.500	0	1.500	29	1.500	30	1.500	33	1.500	35	1.500	37
1.600	0	1.600	0	1.600	53	1.600	36	1.600	37	1.600	38	1.600	40
1.700	0	1.700	0	1.700	124	1.700	44	1.700	41	1.700	42	1.700	43
1.800	0	1.874	0	1.800	174	1.800	65	1.800	48	1.800	46	1.800	46
1.900	0	1.900	29	1.900	210	1.900	166	1.900	59	1.900	52	1.900	50
2.000	0	2.000	57	2.000	238	2.000	248	2.000	132	2.000	61	2.000	56
2.192	0	2.100	75	2.100	261	2.100	307	2.100	266	2.100	103	2.100	66
2.200	5	2.200	88	2.200	280	2.200	353	2.200	359	2.200	282	2.200	107
2.300	30	2.300	98	2.300	297	2.300	391	2.300	430	2.300	408	2.300	319
2.400	46	2.400	106	2.400	312	2.400	423	2.400	487	2.400	503	2.400	470
2.500	57	2.500	113	2.500	325	2.500	451	2.500	535	2.500	579	2.500	585
2.600	66	2.600	119	2.600	337	2.600	475	2.600	577	2.600	643	2.600	677
2.700	73	2.700	124	2.700	348	2.700	497	2.700	613	2.700	697	2.700	754
2.800	79	2.800	129	2.800	358	2.800	517	2.800	645	2.800	745	2.800	821
2.900	84	2.900	133	2.900	367	2.900	535	2.900	674	2.900	787	2.900	878
3.000	89	3.000	137	3.000	376	3.000	552	3.000	700	3.000	825	3.000	930
3.100	93	3.100	141	3.100	384	3.100	567	3.100	724	3.100	859	3.100	976
3.200	97	3.200	145	3.200	391	3.200	581	3.200	746	3.200	890	3.200	1018
3.300	100	3.300	148	3.300	398	3.300	594	3.300	767	3.300	919	3.300	1056
3.400	103	3.400	151	3.400	405	3.400	607	3.400	786	3.400	946	3.400	1092
3.500	106	3.500	154	3.500	411	3.500	618	3.500	804	3.500	971	3.500	1124

mol %	0②	mol %	1②	mol %	2②	mol %	3②	mol %	4②	mol %	5②	mol %	6②
3.600	109	3.600	156	3.600	417	3.600	629	3.600	820	3.600	995	3.600	1155
3.700	112	3.700	159	3.700	423	3.700	640	3.700	836	3.700	1017	3.700	1184
3.800	114	3.800	161	3.800	428	3.800	650	3.800	851	3.800	1037	3.800	1210
3.900	116	3.900	163	3.900	434	3.900	659	3.900	865	3.900	1057	3.900	1236
4.000	118	4.000	166	4.000	439	4.000	668	4.000	879	4.000	1075	4.000	1260
4.100	121	4.100	168	4.100	443	4.100	677	4.100	892	4.100	1093	4.100	1282
4.200	122	4.200	170	4.200	448	4.200	685	4.200	904	4.200	1110	4.200	1304
4.300	124	4.300	172	4.300	452	4.300	693	4.300	916	4.300	1126	4.300	1325
4.400	126	4.400	173	4.400	456	4.400	701	4.400	927	4.400	1141	4.400	1344
4.500	128	4.500	175	4.500	461	4.500	708	4.500	938	4.500	1156	4.500	1363
4.600	129	4.600	177	4.600	464	4.600	715	4.600	948	4.600	1170	4.600	1381
4.700	131	4.700	179	4.700	468	4.700	722	4.700	958	4.700	1183	4.700	1398
4.800	132	4.800	180	4.800	472	4.800	728	4.800	968	4.800	1197	4.800	1415
4.900	134	4.900	182	4.900	476	4.900	734	4.900	977	4.900	1209	4.900	1431
5.000	135	5.000	183	5.000	479	5.000	741	5.000	986	5.000	1221	5.000	1447
6.000	147	6.000	196	6.000	509	6.000	793	6.000	1063	6.000	1324	6.000	1577
7.000	156	7.000	206	7.000	532	7.000	833	7.000	1122	7.000	1404	7.000	1677
8.000	164	8.000	214	8.000	551	8.000	867	8.000	1171	8.000	1468	8.000	1759
9.000	170	9.000	221	9.000	568	9.000	895	9.000	1212	9.000	1523	9.000	1828
10.000	175	10.000	227	10.000	582	10.000	920	10.000	1247	10.000	1570	10.000	1887
11.000	180	11.000	233	11.000	595	11.000	941	11.000	1279	11.000	1612	11.000	1940
12.000	185	12.000	238	12.000	606	12.000	961	12.000	1307	12.000	1650	12.000	1987
13.000	188	13.000	242	13.000	616	13.000	978	13.000	1333	13.000	1684	13.000	2030
14.000	192	14.000	246	14.000	626	14.000	995	14.000	1356	14.000	1715	14.000	2070
15.000	195	15.000	250	15.000	634	15.000	1010	15.000	1378	15.000	1744	15.000	2106
16.000	198	16.000	253	16.000	642	16.000	1023	16.000	1398	16.000	1771	16.000	2139
17.000	201	17.000	256	17.000	650	17.000	1036	17.000	1417	17.000	1796	17.000	2171
18.000	204	18.000	259	18.000	657	18.000	1048	18.000	1435	18.000	1820	18.000	2200
19.000	206	19.000	262	19.000	663	19.000	1060	19.000	1451	19.000	1842	19.000	2228
20.000	208	20.000	264	20.000	669	20.000	1071	20.000	1467	20.000	1863	20.000	2254
21.000	210	21.000	267	21.000	675	21.000	1081	21.000	1482	21.000	1883	21.000	2279
22.000	213	22.000	269	22.000	681	22.000	1091	22.000	1496	22.000	1902	22.000	2303
23.000	215	23.000	271	23.000	686	23.000	1100	23.000	1510	23.000	1920	23.000	2326
24.000	216	24.000	273	24.000	691	24.000	1109	24.000	1523	24.000	1937	24.000	2347
25.000	218	25.000	275	25.000	696	25.000	1118	25.000	1535	25.000	1953	25.000	2368
26.000	220	26.000	277	26.000	701	26.000	1126	26.000	1547	26.000	1969	26.000	2388
27.000	222	27.000	279	27.000	706	27.000	1134	27.000	1559	27.000	1985	27.000	2407
28.000	223	28.000	281	28.000	710	28.000	1141	28.000	1570	28.000	1999	28.000	2425

mol %	0②	mol %	1②	mol %	2②	mol %	3②	mol %	4②	mol %	5②	mol %	6②
29.000	225	29.000	282	29.000	714	29.000	1149	29.000	1581	29.000	2014	29.000	2443
30.000	226	30.000	284	30.000	718	30.000	1156	30.000	1591	30.000	2027	30.000	2460
35.000	233	35.000	291	35.000	737	35.000	1188	35.000	1638	35.000	2090	35.000	2538
40.000	238	40.000	297	40.000	753	40.000	1216	40.000	1679	40.000	2144	40.000	2605
45.000	243	45.000	302	45.000	767	45.000	1241	45.000	1715	45.000	2191	45.000	2664
50.000	248	50.000	306	50.000	780	50.000	1264	50.000	1748	50.000	2234	50.000	2717
55.000	252	55.000	310	55.000	791	55.000	1284	55.000	1777	55.000	2272	55.000	2764
60.000	255	60.000	314	60.000	802	60.000	1303	60.000	1804	60.000	2307	60.000	2808
65.000	259	65.000	318	65.000	812	65.000	1320	65.000	1829	65.000	2340	65.000	2848
70.000	262	70.000	321	70.000	821	70.000	1336	70.000	1851	70.000	2370	70.000	2885

Notes:

① Aspiration times for Waste Material Types III.1, III.2, and III.3 are identical.

② Numbers represent the number of layers of confinement.

This page intentionally left blank.

6.0 PAYLOAD ASSEMBLY REQUIREMENTS

This chapter presents an overview of the control procedures that shall be used by the sites in order to assemble a payload qualified for transport in the TRUPACT-II or the HalfPACT. The parameters described in previous chapters shall be evaluated for selection of a payload. The evaluation of transportation compliance for a payload container is shown in Figure 6.1-1. The container identification (ID) number shall uniquely identify the payload container. Each payload container shall have an assigned shipping category and content code. Wherever applicable, the physical, nuclear, and gas generation measured parameters (weight, fissile material, decay heat, and flammable gas generation rate) shall be checked against the limits after addition of the measurement error, as detailed in previous chapters. If any of the physical, chemical, or nuclear property limits are not met by the container, it shall be rejected from transport (subject to mitigation or repackaging), marked, and segregated. Containers that do not meet individual container gas generation limits (decay heat, flammable gas generation rate, total gas generation rate, etc.) may still meet transportation requirements if mixed with other payload containers or dunnage containers during payload assembly, in accordance with Sections 6.2.4 and/or 6.2.5.

Assembled payloads shall comply with the authorized payload configurations specified in Section 2.1. A TRUPACT-II or HalfPACT payload may be assembled of payload containers belonging to the same shipping category or different shipping categories (e.g., payload may consist of several shipping categories and/or may take credit for void volume provided by dunnage containers). The logic for selecting a payload qualified for transport when all payload containers belong to the same shipping category is presented in Figure 6.1-2. Payload selection shall be made from only those payload containers that have been approved for payload assembly.

6.1 Requirements

Once compliance with all transportation parameter requirements is verified and the appropriate PCTCD(s) and/or OPCTCD(s) is completed, the TRUPACT-II or HalfPACT package shall be authorized for shipment by the site Transportation Certification Official by completing and signing the PATCD.

Payload assembly requirements specific to Content Code LA 154, SQ 154, and SQ 156 payloads, which supplement the requirements of this section, are specified in Appendix 6.12 of the CH-TRU Payload Appendices.[1]

The shipping records shall be maintained by the shipper for a minimum period of 3 years.

[1] U.S. Department of Energy (DOE), *CH-TRU Payload Appendices*, U.S. Department of Energy, Carlsbad Field Office, Carlsbad, New Mexico.

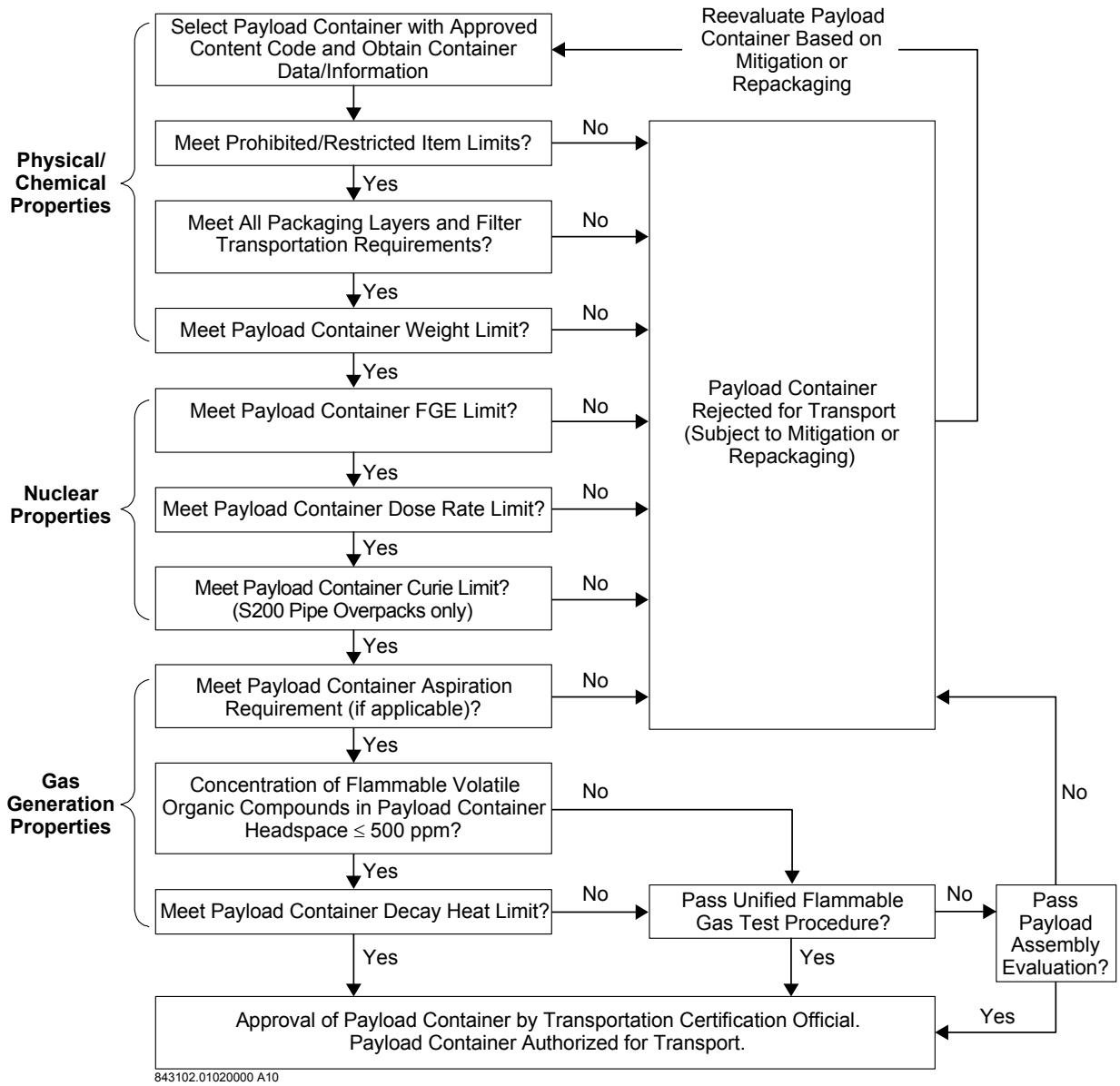

Note: Compliance determinations illustrated by this figure may occur in any sequence.

Figure 6.1-1 – Evaluation of Transportation Compliance for a Payload Container

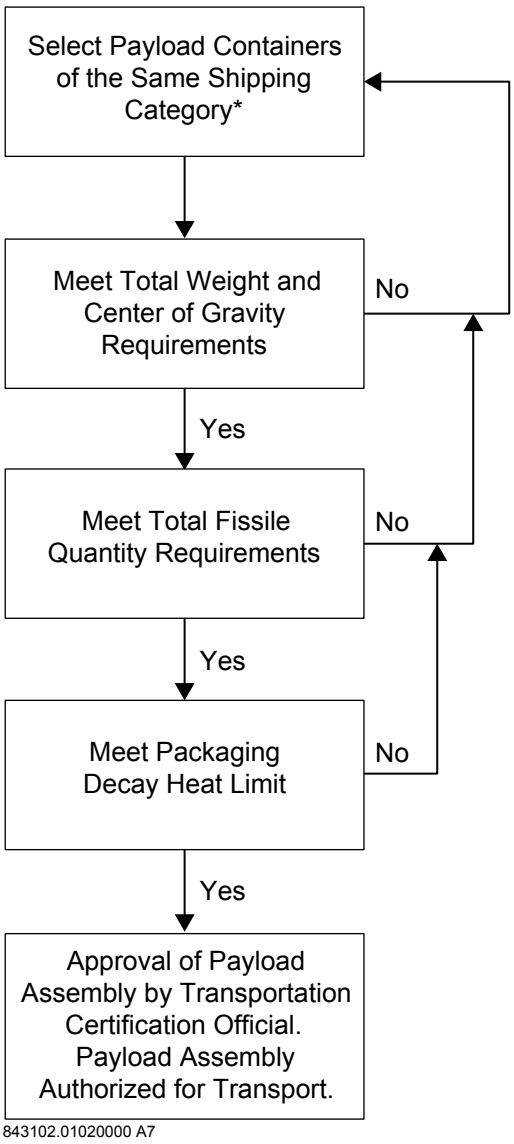

* A payload assembled of payload containers belonging to different shipping categories is subject to requirements discussed in Section 6.2.4.

Figure 6.1-2 – TRUPACT-II and HalfPACT Payload Assembly Criteria for Payload Containers of the Same Shipping Category

This page intentionally left blank.

6.2 Methods of Compliance and Verification

6.2.1 Procedure for Certification of Individual Payload Containers

6.2.1.1 Analytical Category

Generating and storage sites shall qualify an individual payload container for transport in a TRUPACT-II or HalfPACT under the analytical category by verifying that the container meets the parameter requirements/limits listed in the PCTCD, Analytical Category (Table 6.2-1) and, if applicable, the OPCTCD (Table 6.2-3). Table 6.2-1 shall be completed for each payload container to be directly loaded into the ICV. If payload containers will be overpacked, Table 6.2-1 shall be completed for each payload container to be overpacked, and Table 6.2-3 shall be completed for the payload container overpacking other payload containers. For example, if four 55-gallon drums will be overpacked in one SWB, Table 6.2-1 must be completed separately for each 55-gallon drum, and Table 6.2-3 must be completed once for the SWB.

Table 6.2-1 may be reformatted for site use. All parameters noted on the form shall be included in any modified version. Data on the parameters for specific payload containers shall be obtained by the methods outlined in this document. As an alternative to manually completing the PCTCD, a verified/validated software package may be used to determine payload container compliance and prepare an equivalent PCTCD form. Table 6.2-1 shall be completed as follows (section numbers in parentheses refer to sections in the CH-TRAMPAC that provide requirement and compliance and verification information for the transportation parameter described):

Identification Parameters

- Container ID#/Container Bar Code # (Section 2.4): The site-specific ID number(s) is unique to each container of waste and provides a means for tracking process data records and package history. These records on the properties of the waste container are referred to as the data package. The container ID number is assigned to the container prior to waste packaging. The ID number appears on a label affixed to the payload container and can be read for visual verification or for electronic retrieval (i.e., bar codes). Information necessary for transporting payload containers is entered into the data package under this ID number.
- Container Designated for Controlled Shipment? (Section 5.1): Indicate if the container is designated for controlled shipment in accordance with the controls specified in Appendix 3.6 of the CH-TRU Payload Appendices.[1] If the payload container is designated for controlled shipment, the payload container may only be combined in a payload assembly that is designated for controlled shipment as described in Section 6.2.2.
- Shipping Category (Section 5.1): The shipping category shall be assigned to the payload container by looking up the shipping category from the appropriate content code in the CH-TRUCON document[2]. The methodology by which a shipping category is assigned to

[1] U.S. Department of Energy (DOE), *CH-TRU Payload Appendices*, U.S. Department of Energy, Carlsbad Field Office, Carlsbad, New Mexico.

[2] U.S. Department of Energy (DOE), *CH-TRU Waste Content Codes (CH-TRUCON)*, current revision, DOE/WIPP 01-3194, U.S. Department of Energy, Carlsbad Field Office, Carlsbad, New Mexico.

a content code is shown in Figure 6.2-1. Either the alpha-numeric shipping category or the numeric shipping category may be used.

- Content Code (Section 1.5): The content code from the data package for the payload container shall be approved as described in Section 1.5.2. The content code of the waste describes its physical and chemical form.
- Container Configuration (Sections 2.1 and 2.9): Select the appropriate payload container configuration (select one – direct load, fixed, or overpacked). The container shall be one of the approved types in one of the following authorized configurations:

  Direct Load Configurations:

  - 55-Gallon Drum: Select Direct Load "55-Gallon Drum" for waste directly loaded into one 55-gallon drum to be loaded directly into the ICV. Complete Table 6.2-1 for the 55-gallon drum using the appropriate shipping category for the 55-gallon drum.
  - 85-Gallon Drum: Select Direct Load "85-Gallon Drum" for waste directly loaded into one 85-gallon drum to be loaded directly into the ICV. Complete Table 6.2-1 for the 85-gallon drum using the appropriate shipping category for the 85-gallon drum.
  - 100-Gallon Drum: Select Direct Load "100-Gallon Drum" for waste directly loaded into one 100-gallon drum to be loaded directly into the ICV. Complete Table 6.2-1 for the 100-gallon drum using the appropriate shipping category for the 100-gallon drum.
  - SWB: Select Direct Load "SWB" for waste directly loaded into one SWB to be loaded directly into the ICV. Complete Table 6.2-1 for the SWB using the appropriate shipping category for the SWB.
  - TDOP: Select Direct Load "TDOP" for waste directly loaded into one TDOP to be loaded directly into the ICV. Complete Table 6.2-1 for the TDOP using the appropriate shipping category for the TDOP.

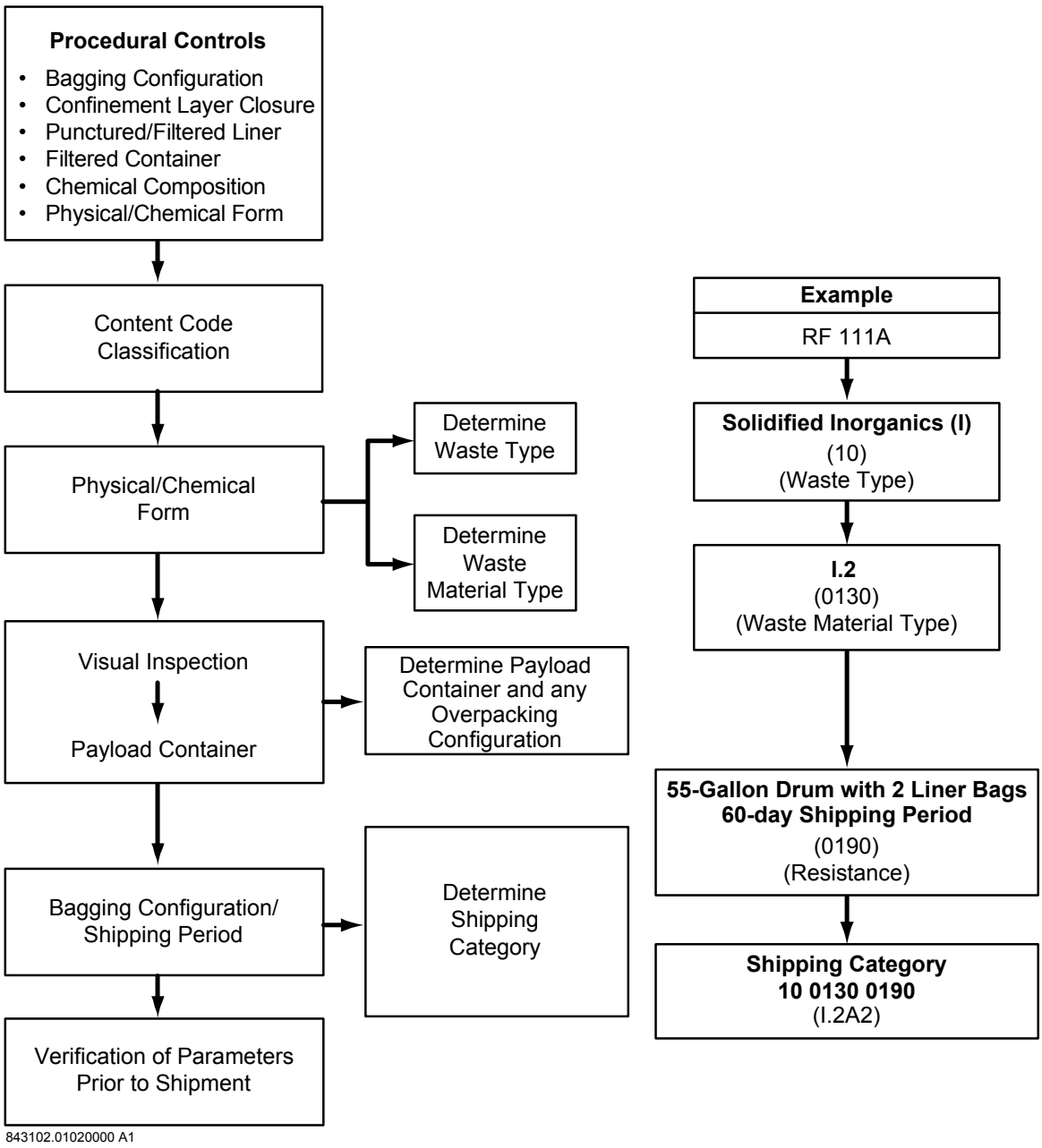

Figure 6.2-1 – Assignment of Shipping Categories

Fixed Configurations:

NOTE: The completion of Table 6.2-3 is not required for these configurations.

- Six-Inch Standard Pipe Overpack: Select Fixed Configuration "6-in. Standard Pipe Overpack" for waste packaged in one 6-in. pipe component overpacked in one 55-gallon drum, as described in Section 2.9. Complete Table 6.2-1 for the 6-in. standard pipe overpack using the appropriate shipping category for the standard pipe overpack. A 6-in. standard pipe overpack may only be combined in a seven-pack with other 6-in. standard pipe overpacks.
- Twelve-Inch Standard Pipe Overpack: Select Fixed Configuration "12-in. Standard Pipe Overpack" for waste packaged in one 12-in. pipe component overpacked in one 55-gallon drum, as described in Section 2.9. Complete Table 6.2-1 for the 12-in. standard pipe overpack using the appropriate shipping category for the standard pipe overpack. A 12-in. standard pipe overpack may only be combined in a seven-pack with other 12-in. standard pipe overpacks.
- S100 Pipe Overpack: Select Fixed Configuration "S100 Pipe Overpack" for waste packaged in one S100 pipe component overpacked in one 55-gallon drum, as described in Section 2.9. Complete Table 6.2-1 for the S100 pipe overpack using the appropriate shipping category for the S100 pipe overpack.
- S200 Pipe Overpack: Select Fixed Configuration "S200 Pipe Overpack" for waste packaged in one S200A or S200B pipe component overpacked in one 55-gallon drum, as described in Section 2.9. Complete Table 6.2-1 for the S200 pipe overpack using the appropriate shipping category for the S200 pipe overpack.
- S300 Pipe Overpack: Select Fixed Configuration "S300 Pipe Overpack" for waste packaged in one S300 pipe component overpacked in one 55-gallon drum, as described in Section 2.9. Complete Table 6.2-1 for the S300 pipe overpack using the appropriate shipping category for the S300 pipe overpack.
- SWB with Bin (Bin Overpack): Select Fixed Configuration "SWB with Bin (Bin Overpack)" for waste packaged in one bin overpacked in one SWB. Note that the bin is only authorized for use in this configuration. Complete Table 6.2-1 for the bin overpack using the appropriate shipping category for the bin overpack configuration (no associated shipping category recorded for the SWB).

Overpacked Configurations:

- 85-Gallon Drum with 55-Gallon Drum (85-Gallon Drum Overpack): Select Overpacked Configuration "85-Gallon Drum with 55-Gallon Drum (85-Gallon Drum Overpack)" for waste packaged in one 55-gallon drum overpacked in one 85-gallon drum. Complete Table 6.2-1 for the 55-gallon drum using the appropriate shipping category for the 85-gallon drum overpack configuration and Table 6.2-3 for the 85-gallon drum (no associated shipping category recorded for the 85-gallon drum).
- SWB with 55-Gallon Drum(s) (SWB Overpack): Select Overpacked Configuration "SWB with 55-Gallon Drum(s) (SWB Overpack)" for waste packaged in one 55-gallon drum to be overpacked in one SWB (up to four 55-gallon drums per SWB).

Complete Table 6.2-1 for each of the 55-gallon drums using the appropriate shipping category for each 55-gallon drum and Table 6.2-3 for the SWB (no associated shipping category recorded for the SWB).

- TDOP with 55-Gallon Drum(s): Select Overpacked Configuration "TDOP with 55-Gallon Drum(s)" for waste packaged in one 55-gallon drum to be overpacked in one TDOP (up to ten 55-gallon drums per TDOP). Complete Table 6.2-1 for each of the 55-gallon drums using the appropriate shipping category for each 55-gallon drum and Table 6.2-3 for the TDOP (no associated shipping category recorded for the TDOP).
- TDOP with SWB Overpack: Select Overpacked Configuration "TDOP with SWB Overpack" for waste packaged in one 55-gallon drum to be overpacked in one SWB (up to four 55-gallon drums per SWB) to be overpacked in one TDOP (one SWB per TDOP). Complete Table 6.2-1 for each of the 55-gallon drums using the appropriate shipping category for each drum and Table 6.2-3 once for the SWB and once for the TDOP (no associated shipping category recorded for the SWB or TDOP).
- TDOP with 85-Gallon Drum Overpack(s): Select Overpacked Configuration "TDOP with 85-Gallon Drum Overpack(s)" for waste packaged in one 55-gallon drum overpacked in one 85-gallon drum to be overpacked in one TDOP (up to six 85-gallon drum overpacks per TDOP). Complete Table 6.2-1 for each of the 55-gallon drum(s) using the appropriate shipping category for the 85-gallon drum overpack configuration and Table 6.2-3 for each 85-gallon drum and for the TDOP (no associated shipping category recorded for the 85-gallon drum or TDOP).
- TDOP with 85-Gallon Drum(s): Select Overpacked Configuration "TDOP with 85-Gallon Drum(s)" for waste packaged in one 85-gallon drum to be overpacked in one TDOP (up to six 85-gallon drums per TDOP). Complete Table 6.2-1 for each of the 85-gallon drums using the appropriate shipping category for each 85-gallon drum and Table 6.2-3 for the TDOP (no associated shipping category recorded for the TDOP).
- TDOP with SWB: Select Overpacked Configuration "TDOP with SWB" for waste packaged in one SWB to be overpacked in one TDOP (one SWB per TDOP). Complete Table 6.2-1 for the SWB using the appropriate shipping category for the SWB and Table 6.2-3 for the TDOP (no associated shipping category recorded for the TDOP).
- TDOP with Bin Overpack: Select Overpacked Configuration "TDOP with Bin Overpack" for waste packaged in one bin overpacked in one SWB (bin overpack) to be overpacked in one TDOP (one bin overpack per TDOP). Complete Table 6.2-1 for the bin overpack using the appropriate shipping category for the bin overpack and Table 6.2-3 for the TDOP (no associated shipping category recorded for the TDOP).

- Certification Site: The certification site shall be recorded as the location at which transportation certification occurs.

CH-TRAMPAC Transportation Parameters

Compliance information for the CH-TRAMPAC transportation parameters shall be obtained from the data package for the payload container.

- Criteria: The following criteria shall be met:
  - Free liquids are <1% of payload container volume. (Section 2.6)
  - Sharp/heavy objects are blocked/braced/suitably packaged. (Section 2.7)
  - Nonradioactive pyrophorics are not present or have been reacted. (Section 4.1)
  - Radioactive pyrophorics are ≤1% (weight). (Section 4.1)
  - Explosives are not present. (Section 4.2)
  - Corrosives are not present. (Section 4.2)
  - Pressurized containers and compressed gases are not present. (Section 4.2)
  - Sealed containers that are greater than 4 liters (nominal) are not present, except for Waste Material Type II.2 packaged in metal cans. (Section 2.8)
  - Rigid liner (if present) is punctured/vented. (Section 2.9)
  - Flammable VOCs are ≤500 ppm in payload container headspace. (Section 5.2) [Note: If flammable VOCs >500 ppm, the container must be evaluated as test category. (Section 6.2.1.2)]
  - Radiation dose rate at the surface of the payload container is ≤ the payload container limit provided in Table 3.2-1. (Section 3.2) If the payload container will be overpacked, the limit applies only to the outermost payload container.
- Filter(s) Identification (Section 2.5): Identification shall be listed for the type and number of filters used in a payload container for compliance with the required total minimum hydrogen diffusivity requirement (see Table 2.5-1). If Table 6.2-1 is being completed for a fixed configuration, filter information shall be listed for both payload containers. If inner filtered confinement layers (filtered metal cans, filtered inner lid, etc.) or equivalent venting mechanisms are used, documented compliance with the specifications in Section 2.5 shall be verified.

Measured Parameters

- Weight (Section 2.3): The maximum allowable weight for the appropriate payload container type shall be recorded. If the payload container will be overpacked, the limit for the maximum allowable weight applies only to the outermost payload container of the overpacked configuration.

  The measured weight of the payload container may be obtained from its data package. The measured payload container weight plus the measurement error (one standard deviation) shall be compared to the maximum allowable weight limit for the appropriate payload container type. If Table 6.2-1 is being completed for a payload container that will be overpacked and the weight of the entire overpack configuration will be determined, the recorded weight of the individual payload container to be overpacked is

not required. Alternatively, the weights of the individual payload containers and the weight of the empty overpack container may be summed to determine the total measured weight of the overpacked configuration in the completion of Table 6.2-3. The measured weight of the individual payload container may be recorded in Table 6.2-1 for later use in completing Table 6.2-3 for the overpacked configuration.

- Decay Heat (Section 5.2.3): The maximum allowable decay heat limit per payload container for the applicable payload shipping category shall be recorded from the determination made pursuant to Section 5.2.3.

  The measured decay heat plus the measurement error (one standard deviation) of the payload container may be obtained from its data package. Measured decay heats are determined from the isotopic composition and quantity of radionuclides, as described in Section 3.1. The measured decay heat plus the measurement error shall be compared to the maximum allowable decay heat limit per payload container for the appropriate shipping category if the anticipated payload consists of payload containers belonging to the same shipping category. For these configurations, compliance with flammable gas generation limits is determined by compliance with decay heat limits.

  For payload assemblies where credit is taken for dunnage or different shipping categories, the FI, based on the assembled payload, determines compliance with flammable gas generation limits, as described in Section 6.2.4. For these configurations, indicate under "Limit" that a decay heat limit for the payload container is not applicable.

- Fissile Mass (FGE) (Section 3.1): The maximum allowable fissile mass limit for the appropriate payload container type shall be recorded. If the payload container will be overpacked, the limit for maximum allowable fissile mass applies only to the outermost payload container of the overpacked configuration.

  The measured fissile mass of the payload container may be obtained from its data package. The measured payload container fissile mass value plus two times the measurement error (two standard deviations) shall be compared to the maximum allowable fissile mass limit for the appropriate payload container type. If Table 6.2-1 is being completed for a payload container that will be overpacked, the measured fissile mass of the individual payload container may be recorded in Table 6.2-1 for later use in completing Table 6.2-3 for the overpack configuration.

- Curie Limits (Ci) (Section 3.3): Payload container curie limits apply to S200 pipe overpack configurations only and are specified in Section 3.3. The Transportation Certification Official shall verify that, for all applicable radionuclides, the measured value plus error (one standard deviation) meets the appropriate curie limit. Compliance shall be documented in Table 6.2-1.

Unvented Waste Parameters (Unvented Waste Only) (Section 5.3)

- Aspiration Method: Option 1, 2A, 2B, or 3 shall be indicated.
- Required Aspiration Period: The required aspiration time for the selected option shall be noted from Table 5.3-1 through Table 5.3-12 of Section 5.3 or determined in accordance with Appendix 3.7 of the CH-TRU Payload Appendices.[1] If the hydrogen concentration indicates that aspiration is not needed, a zero shall be entered.

- Container Closed Time (Option 1 Only): The period of time that a payload container has been unvented in storage shall be recorded.
- Headspace H_2 Concentration (Option 2A, 2B, or 3): The concentration of hydrogen measured in the headspace shall be recorded.
- Time Container Vented: Indicate the number of days the payload container has vented. The time that the container was vented must be greater than or equal to the required aspiration period recorded under "Required Aspiration Period" (Section 5.3).

Transportation Certification Official (Section 1.6)

The site Transportation Certification Official shall verify that all of the requirements for the above transportation parameters are met as stated in this document. The site Transportation Certification Official shall sign and date the PCTCD upon completion, thereby authorizing the payload container for payload assembly or to be overpacked in another payload container (in which case Table 6.2-3 must also be completed). If the requirements are not met, the payload container is rejected (nonconformance disposition) and is not qualified.

6.2.1.2 Test Category

Generating and storage sites shall qualify an individual payload container for transport in a TRUPACT-II or HalfPACT under the test category by verifying that the container meets the parameter requirements/limits listed in the PCTCD, Test Category (Table 6.2-2) and, if applicable, the OPCTCD (Table 6.2-3). Table 6.2-2 shall be completed for each payload container to be directly loaded into the ICV. If payload containers will be overpacked, Table 6.2-2 shall be completed for each payload container to be overpacked, and Table 6.2-3 shall be completed for the payload container overpacking other payload containers.

Table 6.2-2 may be reformatted for site use. All parameters noted on the form shall be included in any modified version. Data on the parameters for specific payload containers shall be obtained by methods outlined in this document. As an alternative to manually completing the PCTCD, a verified/validated software package may be used to determine payload container compliance and prepare an equivalent PCTCD form. Table 6.2-2 shall be completed as follows (section numbers in parentheses refer to sections in the CH-TRAMPAC that provide requirement and compliance and verification information for the transportation parameter described):

Identification Parameters, CH-TRAMPAC Transportation Parameters, Measured Parameters, Unvented Waste Parameters

Complete relevant items pursuant to the instructions provided in Section 6.2.1.1.

Test Criteria (Section 5.2.5)

The test criteria are obtained by implementation of the UFGTP for a payload container. The site Transportation Certification Official shall verify that the requirements of Section 5.2.5 have been met.

Transportation Certification Official (Section 1.6)

The site Transportation Certification Official shall verify that all of the requirements for the above transportation parameters are met as stated in this document. The site Transportation Certification Official shall sign and date the PCTCD upon completion, thereby authorizing the

payload container for payload assembly or to be overpacked in another payload container (in which case Table 6.2-3 must also be completed). If the requirements are not met, the payload container is rejected (nonconformance disposition) and is not qualified.

6.2.1.3 Overpack Payload Containers

Table 6.2-3 (the OPCTCD) shall be completed for each payload container overpacking other payload containers. Table 6.2-3 may be reformatted for site use. All parameters noted on the form shall be included in any modified version. Data on the parameters for specific payload containers shall be obtained by methods outlined in this document. As an alternative to manually completing the OPCTCD, a verified/validated software package may be used to determine payload container compliance and prepare an equivalent OPCTCD form.

Mixing of payload containers with different shipping categories within an overpack payload container is allowed as described in Section 6.2.4 and Appendix 2.4 of the CH-TRU Payload Appendices.[1] The container type shall be the same for all containers overpacked within the overpack payload container.

Table 6.2-3 shall be completed as follows (section numbers in parentheses refer to the sections in the CH-TRAMPAC that provide requirements and compliance and verification information for the transportation parameters described):

Identification Parameters

- Overpack Container ID#/Overpack Container Bar Code # (Section 2.4): The site-specific ID number(s) is unique to each container of waste and provides a means for tracking process data records and package history. These records on the properties of the waste container are referred to as the data package. The container ID number is assigned to the container prior to waste packaging. The ID number appears on a label affixed to the payload container and can be read for visual verification or for electronic retrieval (i.e., bar codes). Information necessary for transporting payload containers is entered into the data package under this ID number.
- Container Designated for Controlled Shipment? (Section 5.1): Using information from Table 6.2-1 or Table 6.2-2, which shall be completed separately for each overpacked container, determine if any overpacked container has been designated for controlled shipment. If any overpacked container is designated for controlled shipment, the overpack payload container must be qualified for controlled shipment. Indicate if the overpack payload container is designated for controlled shipment in accordance with the conditions specified in Appendix 3.6 of the CH-TRU Payload Appendices.[1]
- Shipping Category (Section 5.1): The shipping category for the overpack configuration shall be recorded only if all overpacked containers belong to the same shipping category. The shipping category shall be determined by consulting the appropriate PCTCD(s) completed for the payload container(s) to be overpacked. Mixing of shipping categories within an overpack is allowed as described in Section 6.2.4. If mixing shipping categories pursuant to Section 6.2.4, indicate that the shipping category is not applicable (e.g., “NA – Mixing”). The overpacked container type shall be the same for all containers overpacked within the overpack payload container.

- Decay Heat Limit (Section 5.2.3): If all overpacked containers belong to the same shipping category, the maximum allowable decay heat per payload container for the payload shipping category of the overpacked configuration shall be recorded from the appropriate PCTCD(s) completed for the payload container(s) to be overpacked. If mixing shipping categories within an overpack pursuant to Section 6.2.4, indicate that the decay heat limit for the payload is not applicable (e.g., "NA – Mixing").
- Hydrogen/Flammable Gas Generation Rate Limit (Section 5.2.3 or 5.2.5): If all overpacked containers belong to the same shipping category, the flammable gas generation rate limit for the overpack is recorded from Table 5.2-1 or determined using the methodology described in Section 5.2.3 (for analytical category waste) or from Section 5.2.5 (for test category waste). If mixing shipping categories within an overpack pursuant to Section 6.2.4, indicate that the hydrogen/flammable gas generation rate limit for the payload is not applicable (e.g., "NA – Mixing").
- Overpack/Overpacked Container Type (Section 2.1): Select the appropriate Overpack Container Type and Overpacked Container Type as instructed below. The payload container shall be one of the approved types in one of the following authorized configurations:

  85-Gallon Drum:

  – 85-Gallon Drum with 55-Gallon Drum (85-Gallon Drum Overpack) - Waste packaged in one 55-gallon drum overpacked in one 85-gallon drum. Complete Table 6.2-3 for the 85-gallon drum using information from Table 6.2-1 or Table 6.2-2, which shall be completed separately for the 55-gallon drum. Select "85-Gallon Drum" as the Overpack Container Type and "55-Gallon Drum" as the Overpacked Container Type.

  SWB:

  – SWB with 55-Gallon Drum(s) (SWB Overpack) - Waste packaged in 55-gallon drum(s) overpacked in one SWB (up to four 55-gallon drums per SWB). Complete Table 6.2-3 for the SWB using information from Table 6.2-1 or Table 6.2-2, which shall be completed separately for each 55-gallon drum. Select "SWB" as the Overpack Container Type and "55-Gallon Drum" as the Overpacked Container Type.

  TDOP:

  – TDOP with 55-Gallon Drum(s) - Waste packaged in 55-gallon drum(s) overpacked in one TDOP (up to ten 55-gallon drums per TDOP). Complete Table 6.2-3 for the TDOP using information from Table 6.2-1 or Table 6.2-2, which shall be completed separately for each 55-gallon drum. Select "TDOP" as the Overpack Container Type and "55-Gallon Drum" as the Overpacked Container Type.

  – TDOP with SWB - Waste packaged in one SWB overpacked in one TDOP (one SWB per TDOP). Complete Table 6.2-3 for the TDOP using information from Table 6.2-1 or Table 6.2-2, which shall be completed for the SWB. Select "TDOP" as the Overpack Container Type and "SWB" as the Overpacked Container Type.

- TDOP with SWB Overpack - Waste packaged in 55-gallon drum(s) overpacked in one SWB (up to four 55-gallon drums per SWB) overpacked in one TDOP (one SWB per TDOP). Complete Table 6.2-3 for the SWB using information from Table 6.2-1 or Table 6.2-2, which shall be completed separately for each 55-gallon drum. Also complete Table 6.2-3 separately for the TDOP using information from Table 6.2-3 completed for the SWB overpacked in the TDOP. On the OPCTCD for the SWB, select "SWB" as the Overpack Container Type and "55-Gallon Drum" as the Overpacked Container Type. On the OPCTCD for the TDOP, select "TDOP" as the Overpack Container Type and "SWB Overpack" as the Overpacked Container Type.
- TDOP with 85-Gallon Drum Overpack(s) - Waste packaged in one 55-gallon drum overpacked in one 85-gallon drum overpacked in one TDOP (up to six 85-gallon drum overpacks per TDOP). Complete Table 6.2-3 separately for each of the 85-gallon drums using information from Table 6.2-1 or Table 6.2-2, which shall be completed separately for the 55-gallon drum. Also, complete Table 6.2-3 separately for the TDOP using information from Table 6.2-3 completed for each 85-gallon drum overpack. On the OPCTCD for the 85-gallon drum, select "85-Gallon Drum" as the Overpack Container Type and "55-Gallon Drum" as the Overpacked Container Type. On the OPCTCD for the TDOP, select "TDOP" as the Overpack Container Type and "85-Gallon Drum Overpack" as the Overpacked Container.
- TDOP with 85-Gallon Drum(s) - Waste packaged in 85-gallon drum(s) overpacked in one TDOP (up to six 85-gallon drums per TDOP). Complete Table 6.2-3 for the TDOP using information from Table 6.2-1 or Table 6.2-2, which shall be completed separately for each 85-gallon drum. Select "TDOP" as the Overpack Container Type and "85-Gallon Drum" as the Overpacked Container Type.
- TDOP with Bin Overpack - Waste packaged in one bin overpacked in one SWB overpacked in one TDOP (one bin overpack per TDOP). Complete Table 6.2-3 for the TDOP using information from Table 6.2-1 or Table 6.2-2, which shall be completed separately for the bin overpack configuration. Select "TDOP" as the Overpack Container Type and "Bin Overpack" as the Overpacked Container Type.

- Weight Limit (Section 2.3): The maximum allowable weight limit for the appropriate overpack container type (i.e., 85-gallon drum, SWB, or TDOP) shall be recorded. The limit applies only to the outermost payload container. For example, if an SWB Overpack will be overpacked in a TDOP, the limit for maximum allowable weight applies only to the TDOP of the overpacked configuration.
- Fissile Mass Limit (Section 3.1): The maximum allowable fissile mass limit for the appropriate overpack container type (i.e., 85-gallon drum, SWB, or TDOP) shall be recorded. The limit applies only to the outermost payload container.
- Certification Site: The certification site shall be recorded as the location at which transportation certification occurs.

CH-TRAMPAC Transportation Parameters

Compliance information for the CH-TRAMPAC transportation parameters shall be obtained from the data package for the payload container. The following criteria shall be met:

- Surface radiation dose rate ≤ payload container limit (Section 3.2): The radiation dose rate limit at the surface of the overpack container shall be less than or equal to the payload container limit provided in Table 3.2-1 of Section 3.2. The limit applies only to the outermost payload container. For example, if an SWB overpack will be overpacked in a TDOP, the limit for radiation dose rate applies only to the TDOP.
- Filter(s) Identification (Section 2.5): Identification shall be listed for the type and number of filters used in an overpack container (i.e., 85-gallon drum, SWB, or TDOP) for compliance with the total minimum hydrogen diffusivity requirement (from Table 2.5-1 of Section 2.5). For overpacked container(s), documented compliance with the specifications in Section 2.5 shall be verified [e.g., as recorded on associated PCTCD(s) or OPCTCD].

Overpacked Container Measured Parameters

- Overpacked Container ID Number (Section 2.4): List the site-specific identification number for each of the overpacked payload containers.
- Measured Weight and Measurement Error (Section 2.3): The measured weight and measurement error (one standard deviation) for each overpacked container or the entire overpack configuration shall be recorded. The measured weight and measurement error may be obtained from the PCTCD(s) (Table 6.2-1 or Table 6.2-2) for each overpacked container. The measured weight of the individual overpacked containers is not required if the entire overpack configuration will be weighed. If the weight of each individual overpacked container is recorded, enter the weight and measurement error (one standard deviation) of the empty overpack container on the last row. Calculate the total weight as the sum of each of the individual weights (including the weight of the empty overpack container), and record this value in the appropriate box. Calculate the root-sum-of-squares (RSS) error for the overpack configuration as the square root of the sum of the squares of the individually listed errors, and record this value in the appropriate box. If the entire overpack configuration is weighed, record the total weight of the overpack configuration and the measurement error (one standard deviation) in the appropriate boxes (in this case, the measurement error is the same as the RSS error).

  The total weight plus the total RSS error of the entire overpack configuration shall be recorded in the space provided and compared to the maximum allowable weight limit for the outermost payload container of the overpack configuration (i.e., 1,000 lbs. per 85-gallon drum, 4,000 lbs. per SWB, or 6,700 lbs. per TDOP).
- Measured Decay Heat and Measurement Error (Section 5.2.3): The measured decay heat value and measurement error (one standard deviation) for each overpacked container shall be recorded. The measured decay heat value and measurement error may be obtained from the PCTCD(s) (Table 6.2-1 or Table 6.2-2) or OPCTCD (Table 6.2-3) for each overpacked payload container.

  For overpacked analytical category payload containers with the same shipping category, the decay heat value plus the measurement error for each payload container shall be compared individually to the Decay Heat Limit for the overpacked configuration. The spaces provided for "Total" and "Total RSS Error" are for use in completing Table 6.2-4.

If mixing shipping categories within an overpack pursuant to Section 6.2.4, these data are used in the FI calculation as described in Section 6.2.4 and Appendix 2.4 of the CH-TRU Payload Appendices.[1]

- Measured Fissile Mass (FGE) and Measurement Error (Section 3.1): The measured fissile mass and two times the measurement error (two standard deviations) for each overpacked container shall be recorded as obtained from the PCTCD(s) (Table 6.2-1 or Table 6.2-2) or OPCTCD (Table 6.2-3) for each overpacked payload container.

  The subtotal fissile mass plus the total RSS error (RSS of twice each individual measurement error) of the entire overpack configuration shall be compared to the maximum allowable fissile mass limit for the outermost payload container of the overpack configuration.

- Hydrogen/Flammable Gas Generation Rate (Section 5.2.3 or 5.2.5): If all overpacked containers belong to the same shipping category, the flammable gas generation rate limit for the overpack is recorded from Table 5.2-1 or determined using the methodology described in Section 5.2.3 (for analytical category waste); from Section 5.2.5 (for test category waste); or through the use of a verified/validated software package.

  For overpacked test category payload containers with the same shipping category, the hydrogen/flammable gas generation rate for each payload container shall be compared individually to the hydrogen/flammable gas generation rate limit.

  If mixing shipping categories within an overpack pursuant to Section 6.2.4, these data are used in the FI calculation as described in Section 6.2.4 and Appendix 2.4 of the CH-TRU Payload Appendices.[1]

- Flammability Index (Section 6.2.4): If mixing shipping categories within an overpack pursuant to Section 6.2.4, calculate the FI for each overpacked container as described in Section 6.2.4 and Appendix 2.4 of the CH-TRU Payload Appendices[1] after selecting the overpacking containers comprising the payload assembly. Calculation is typically performed by a verified/validated software package. FI is only applicable to overpacking payload containers of different shipping categories. For overpacked payload containers belonging to the same shipping category, indicate that the FI is not applicable (e.g., "NA").

Certification of Compliance

The site Transportation Certification Official shall verify compliance with the requirements for weight, fissile mass, decay heat, hydrogen/flammable gas generation rate, and FI, as applicable to the overpack configuration.

Transportation Certification Official (Section 1.6)

The site Transportation Certification Official shall verify that all of the requirements for the above transportation parameters are met as stated in this document. The site Transportation Certification Official shall sign and date the OPCTCD upon completion, thereby authorizing the payload container for payload assembly or to be overpacked in another payload container (in which case Table 6.2-3 must be completed again). If the requirements are not met, the payload container is rejected (nonconformance disposition) and is not qualified.

Table 6.2-1 – Payload Container Transportation Certification Document (PCTCD), Analytical Category①

IDENTIFICATION PARAMETERS

Container ID #_____ **Container Bar Code #**_____

Container Designated for Controlled Shipment? ○ YES ○ NO

Shipping Category_____ **Content Code**_____

Direct Load Configurations ○ 55-Gallon Drum ○ 85-Gallon Drum ○ 100-Gallon Drum ○ SWB ○ TDOP

Fixed Configurations ○ 6-inch Standard Pipe Overpack ○ 12-inch Standard Pipe Overpack
○ S100 Pipe Overpack ○ S200 Pipe Overpack ○ S300 Pipe Overpack
○ SWB with Bin (Bin Overpack)

Overpacked Configurations ○ 85-Gallon Drum with 55-Gallon Drum (85-Gallon Drum Overpack)
○ SWB with 55-Gallon Drum(s) (SWB Overpack)
○ TDOP with 55-Gallon Drum(s) ○ TDOP with SWB Overpack
○ TDOP with 85-Gallon Drum Overpack(s) ○ TDOP with 85-Gallon Drum(s)
○ TDOP with SWB ○ TDOP with Bin Overpack

Certification Site_____

CH-TRAMPAC TRANSPORTATION PARAMETERS

Criteria	Filter(s) Identification	
Free liquids are <1% of payload container volume		
Sharp/heavy objects are blocked/braced/suitably packaged	1._____	2._____
Nonradioactive pyrophorics are not present or have been reacted		
Radioactive pyrophorics are ≤1% (weight)	3._____	4._____
Explosives are not present		
Corrosives are not present	5._____	6._____
Pressurized containers and compressed gases are not present		
Sealed containers >4 liters are not present (except in Waste Material Type II.2)	7._____	8._____
Rigid liner (if present) is punctured/vented		
Flammable VOCs are ≤ 500 ppm	9._____	10._____
Surface radiation dose rate is ≤ payload container limit②		

MEASURED PARAMETERS

Container Parameter	Value	Error	Value + 1x Error	Value + 2x Error	Limit
Weight (lbs.)					②
Decay Heat (watts)					
Fissile Mass (FGE)					②

Curie Limits (Ci) *S200 pipe overpacks only* Payload container meets limits specified in Section 3.3 _____Yes/No

UNVENTED WASTE PARAMETERS

Aspiration Method ○ Option 1 ○ Option 2A ○ Option 2B ○ Option 3 Required Aspiration Period_____days

Option 1
Container closed time_____months

Options 2A, 2B, or 3
Headspace H_2 Concentration_____mol% Time Container Vented_____days

I certify that the above container meets all the requirements for shipment as stated the CH-TRAMPAC, current revision. The container is approved for ☐ payload assembly or ☐ overpacking.

_____ / _____

TRANSPORTATION CERTIFICATION OFFICIAL / DATE

Notes:

① Follow instructions in Section 6.2.1.1.

② Limits are not applicable if container is to be overpacked.

Table 6.2-2 – Payload Container Transportation Certification Document (PCTCD), Test Category①

IDENTIFICATION PARAMETERS

Container ID #_____ **Container Bar Code #**_____

Container Designated for Controlled Shipment? ○ YES ○ NO

Shipping Category_____ **Content Code**_____

Direct Load Configurations ○ 55-Gallon Drum ○ 85-Gallon Drum ○ 100-Gallon Drum ○ SWB ○ TDOP

Fixed Configurations ○ 6-inch Standard Pipe Overpack ○ 12-inch Standard Pipe Overpack
○ S100 Pipe Overpack ○ S200 Pipe Overpack ○ S300 Pipe Overpack
○ SWB with Bin (Bin Overpack)

Overpacked Configurations ○ 85-Gallon Drum with 55-Gallon Drum (85-Gallon Drum Overpack)
○ SWB with 55-Gallon Drum(s) (SWB Overpack)
○ TDOP with 55-Gallon Drum(s) ○ TDOP with SWB Overpack
○ TDOP with 85-Gallon Drum Overpack(s) ○ TDOP with 85-Gallon Drum(s)
○ TDOP with SWB ○ TDOP with Bin Overpack

Certification Site_____

CH-TRAMPAC TRANSPORTATION PARAMETERS

Criteria	Filter(s) Identification	
Free liquids are <1% of payload container volume Sharp/heavy objects are blocked/braced/suitably packaged Nonradioactive pyrophorics are not present or have been reacted	1._____	2._____
Radioactive pyrophorics are ≤1% (weight) Explosives are not present	3._____	4._____
Corrosives are not present Pressurized containers and compressed gases are not present	5._____	6._____
Sealed containers >4 liters are not present (except in Waste Material Type II.2) Rigid liner (if present) is punctured/vented	7._____	8._____
Surface radiation dose rate is ≤ payload container limit②	9._____	10._____

MEASURED PARAMETERS

Container Parameter	Value	Error	Value + 1x Error	Value + 2x Error	Limit
Weight (lbs.)				[redacted]	②
Fissile Mass (FGE)			[redacted]		②

Curie Limits (Ci) *S200 pipe overpacks only* Payload container meets limits specified in Section 3.3 _____Yes/No

UNVENTED WASTE PARAMETERS

Aspiration Method ○ Option 1 ○ Option 2A ○ Option 2B ○ Option 3 Required Aspiration Period_____days

Option 1
Container closed time_____months

Options 2A, 2B, or 3
Headspace H_2 Concentration_____mol% Time Container Vented_____days

TEST CRITERIA

UFGTP requirements (Section 5.2.5) are met _____Yes/No

I certify that the above container meets all the requirements for shipment as stated in the CH-TRAMPAC, current revision. The container is approved for ☐ payload assembly or ☐ overpacking.

_____ / _____

TRANSPORTATION CERTIFICATION OFFICIAL / DATE

Notes:

① Follow instructions in Section 6.2.1.2.

② Limits are not applicable if container is to be overpacked.

Table 6.2-3 – Overpack Payload Container Transportation Certification Document (OPCTCD)①

IDENTIFICATION PARAMETERS

Overpack Container ID #_____ **Overpack Container Bar Code #**_____

Container Designated for Controlled Shipment? ○ YES ○ NO

Shipping Category② _____

Decay Heat Limit② _____

Hydrogen/Flammable Gas Generation Rate Limit② _____

Overpack Container Type ☐ 85-Gallon Drum ☐ SWB ☐ TDOP

Overpacked Container Type ☐ 55-Gallon Drum(s) ☐ SWB ☐ SWB Overpack
☐ 85-Gallon Drum Overpack(s) ☐ 85-Gallon Drum (s)
☐ Bin Overpack

Weight Limit③ _____(lbs.) **Fissile Mass Limit**③ _____FGE

Certification Site_____

CH-TRAMPAC TRANSPORTATION PARAMETERS

Surface Radiation Dose Rate ≤ payload container limit③

Filter(s) Identification 1._____ 2._____ 3._____ 4._____ 5._____
6._____ 7._____ 8._____ 9._____ 10._____

OVERPACKED CONTAINER MEASURED PARAMETERS

Overpacked Container ID Number	Weight (lbs.)	Error (lbs.)	Decay Heat (watts)	Error (watts)	Fissile Mass (FGE)	2x Error (FGE)	Hydrogen/ Flammable Gas Generation Rate (mol/s)	Flammability Index④
			←Weight and error of empty overpack container (if applicable)					
Total (A)								
Total RSS Error								
Total + RSS Error								

CERTIFICATION OF COMPLIANCE

Total weight + weight error ≤ limit③

Total fissile mass + 2x fissile mass error ≤ limit③

Decay heat + decay heat error ≤ decay heat limit of shipping category for each analytical category payload container②

Hydrogen/flammable gas generation rate ≤ hydrogen/flammable gas generation rate limit of shipping category for each test category payload container②

FI of each overpacked container meets the following condition: $0 \leq FI \leq 50{,}000$④

I certify that the above overpack container meets all the requirements for shipment as an overpack container as stated in the CH-TRAMPAC, current revision. The overpack is approved for
☐ payload assembly or ☐ overpacking.

_____ / _____

TRANSPORTATION CERTIFICATION OFFICIAL / DATE

Notes:

① Follow instructions in Section 6.2.1.3.

② Not applicable if mixing shipping categories pursuant to Section 6.2.4.

③ Limits are not applicable if container is to be overpacked.

④ Applicable if mixing shipping categories pursuant to Section 6.2.4. FI is determined as part of payload assembly (Section 6.2.2).

6.2.2 Procedure for Assembly and Certification of a CH-TRU Payload

Generating and storage sites shall qualify a payload for transport in the TRUPACT-II or HalfPACT by verifying that the payload meets the parameter requirements/limits listed in the PATCD (Table 6.2-4). Table 6.2-4 may be reformatted for site use. All parameters noted on the form shall be included in any modified version. As an alternative to manually completing the PATCD, a verified/validated software package may be used to determine payload assembly compliance and prepare an equivalent PATCD form.

Table 6.2-4 shall be completed as follows (section numbers in parentheses refer to sections in the CH-TRAMPAC that provide requirement and compliance and verification information for the transportation parameter described):

Identification Parameters

- Shipment #: The shipment number of the trailer or railcar of TRUPACT-IIs or HalfPACTs shall be recorded. For shipments by railcar, each railcar shall be assigned a separate shipment number or shipment number suffix.
- Packaging OCA Body/Lid #: The identification numbers on the TRUPACT-II or HalfPACT OCA body and lid shall be recorded.
- Payload Assembly Designated for Controlled Shipment? (Section 5.1): Using information from the PCTCD (Table 6.2-1 or Table 6.2-2) and OPCTCD (Table 6.2-3), determine if any payload container comprising the payload assembly has been designated for controlled shipment. If any container is designated for controlled shipment, the payload assembly must be qualified for controlled shipment. Indicate if the payload assembly is designated for controlled shipment in accordance with the conditions specified in Appendix 3.6 of the CH-TRU Payload Appendices.[1] If the payload assembly is designated for controlled shipment, Table 6.2-5 must also be completed for the shipment of the payload (Section 6.2.3).
- Shipping Category (Section 5.1): The shipping category of the payload shall be recorded only if all containers belong to the same shipping category. Mixing of shipping categories, including credit for dunnage, is allowed as described in Section 6.2.4. If mixing shipping categories pursuant to Section 6.2.4, indicate that the shipping category of the payload is not applicable (e.g., "NA – Mixing").
- Decay Heat Limit (Section 5.2.3): If all containers belong to the same shipping category, the maximum allowable decay heat per payload container for the shipping category shall be recorded from the PCTCD (Table 6.2-1 or Table 6.2-2) and OPCTCD (Table 6.2-3). Mixing of shipping categories and payloads of any authorized contents, including credit for dunnage, is allowed as described in Section 6.2.4. If mixing shipping categories pursuant to Section 6.2.4, indicate that the decay heat limit for the payload is not applicable (e.g., "NA – Mixing").
- Hydrogen/Flammable Gas Generation Rate Limit (Section 5.2): If all containers belong to the same shipping category, the maximum allowable hydrogen/flammable gas generation rate per payload container for the shipping category shall be recorded from the OPCTCD(s) (Table 6.2-3), if used; from Table 5.2-1 or determined using the

methodology described in Section 5.2.3 (for analytical category waste) or from Section 5.2.5 (for test category waste). Mixing of shipping categories and payloads of any authorized contents, including credit for dunnage, is allowed as described in Section 6.2.4. If mixing shipping categories pursuant to Section 6.2.4, indicate that the hydrogen/ flammable gas generation rate limit for the payload is not applicable (e.g., "NA – Mixing").

- Type of Payload (Section 2.1): The payload configuration shall consist of an approved type of payload container. If the payload type is "Standard Pipe Overpacks," each seven-pack in the payload must be comprised of only 6-in. standard pipe overpacks or 12-in. standard pipe overpacks.
- Transportation Packaging: The type of packaging used (TRUPACT-II or HalfPACT) shall be recorded
- Date ICV Closed: The date that the ICV is closed shall be recorded.
- Time ICV Closed: For payloads designated for controlled shipment only, the time that the ICV is closed shall be recorded. For other payloads, the time that the ICV is closed need not be recorded.

Bottom Payload Assembly Composition and Top Payload Assembly Composition

The following data shall be recorded from each PCTCD (Table 6.2-1 and Table 6.2-2) or from the OPCTCD (Table 6.2-3), as applicable, for each payload container comprising the payload:

- Payload container ID number or "DUNNAGE" or "EMPTY" (Section 2.4)
- Measured weight and measurement error (Section 2.3)
- Measured decay heat and measurement error (one standard deviation) (Section 5.2.3)
- Measured fissile mass and two times the measurement error (two standard deviations or one times the RSS error if values are taken from an OPCTCD) (Section 3.1)

If the data are obtained from the OPCTCD, errors should be the calculated RSS errors (the square root of the sum of the squares of the individually listed errors).

In addition, record the measured hydrogen/flammable gas generation rate for payloads containing test category waste from each PCTCD (Section 5.2.5). If mixing shipping categories pursuant to Section 6.2.4, calculate and record the hydrogen/flammable gas generation rate and the FI for each payload container. If the payload assembly consists of overpacked configurations, indicate that the hydrogen/flammable gas generation rate and FI are not applicable (e.g., "NA – Mixing") and record the hydrogen/flammable gas generation rate and FI for each overpacked container on the appropriate OPCTCD (Table 6.2-3). This calculation is typically performed using a verified/validated software package.

Payload Totals

- Weight of Pallets, Reinforcing Plates, Slip Sheets, Guide Tubes, Adjustable Slings, etc. (Section 2.3): The total measured weight of the pallets, reinforcing plates, slip sheets, guide tubes, etc., for TRUPACT-II or HalfPACT payloads is recorded. If the weight is determined through a single measurement of the payload assembly, indicate the weight of the pallets, etc., is not applicable (e.g., "NA").

- Total Weight/Total RSS Weight Error (Section 2.3): The sum of the subtotal weights plus the weight of the pallets, reinforcing plates, slip sheets, guide tubes, etc., and the total RSS weight error shall be recorded. If the weight is determined through a single measurement of the payload assembly, the associated error is simply the error for that one measurement (one standard deviation).
- Total Decay Heat/Total RSS Decay Heat Error (Section 5.2.3): The sum of the decay heats and the total RSS error shall be recorded.
- Total Fissile Mass/Total RSS Fissile Mass Error (Section 3.1): The sum of the fissile masses and the total RSS error shall be recorded.
- Bottom Assembly Weight plus Subtotal RSS Error (TRUPACT-II Only): For the TRUPACT-II, the subtotal weight plus the subtotal RSS error for the bottom layer of seven 55-gallon drums, four 85-gallon drums, three 100-gallon drums, seven pipe overpacks, one SWB, five drums in a TDOP, or four 85-gallon drums in a TDOP shall be recorded.
- Top Assembly Weight plus Subtotal RSS Error (TRUPACT-II Only): For the TRUPACT-II, the subtotal weight plus the subtotal RSS error for the top layer of seven 55-gallon drums, four 85-gallon drums, three 100-gallon drums, seven pipe overpacks, one SWB, five 55-gallon drums in a TDOP, or two 85-gallon drums in a TDOP shall be recorded.
- Total Weight plus Total RSS Error: The sum of the total weights plus the weight of the pallets, reinforcing plates, slip sheets, guide tubes, adjustable slings, etc., plus the total RSS weight error shall be recorded.
- Total Decay Heat plus Total RSS Error: The sum of the total decay heat values plus the total RSS decay heat error shall be recorded.
- Total Fissile Mass plus Total RSS Error: The sum of the total fissile mass values plus the total RSS fissile mass error shall be recorded.

Payload Certification Parameters

The site Transportation Certification Official shall verify compliance with the following requirements.

- Decay Heat plus Error of Each Analytical Category Payload Container Less Than or Equal to Limit (Section 5.2.3): For payload containers with the same shipping category, all analytical category payload containers shall meet the decay heat limit.
- Hydrogen/Flammable Gas Generation Rate of Each Test Category Payload Container Less Than or Equal to Limit (Section 5.2): For payload containers with the same shipping category, all payload containers shall meet the hydrogen/flammable gas generation rate limit.
- Flammability Index of Each Payload Container Greater Than Zero and Less Than or Equal to 50,000 (Section 6.2.4): For shipments with dunnage or multiple shipping categories, record the FI for each container, calculated as described in Section 6.2.4 of the CH-TRAMPAC and Appendix 2.4 of the CH-TRU Payload Appendices.[1] The FI for

each container must be a non-negative number less than or equal to 50,000 for the payload to be eligible for shipment.

- Payload Total Gas Release Rate Less Than or Equal to Limit Calculated in Accordance With Section 6.2.5 (Section 6.2.5): Payload total gas release rate limits apply only to payloads containing one or more Waste Type IV payload containers that exceed the payload container total gas release rate limit specified in Table 5.2-11 of Section 5.2. The site Transportation Certification Official shall verify that the determined payload total gas release rate is less than or equal to the appropriate payload total gas release rate limit pursuant to the methodology defined in Section 6.2.5.
- Bottom Weight Greater Than or Equal to Top Weight (Section 2.3) (TRUPACT-II Only): For the TRUPACT-II, the subtotal weight plus subtotal RSS weight error of the bottom layer of seven 55-gallon drums, four 85-gallon drums, three 100-gallon drums, seven pipe overpacks, one SWB, five 55-gallon drums in a TDOP, or four 85-gallon drums in a TDOP shall be greater than or equal to that of the top layer.
- Total Weight plus RSS Error Less Than or Equal to Packaging Limit (Section 2.3): The total measured payload weight plus the weight of the pallets, reinforcing plates, etc., plus the total RSS weight error shall be less than or equal to 7,265 lbs. for TRUPACT-II payloads or 7,600 lbs. for HalfPACT payloads.
- Decay Heat plus RSS Error Less Than or Equal to Packaging Decay Heat Limit (Section 5.2.3): The total measured decay heat value plus the total RSS decay heat error shall be less than or equal to the design limit for the packaging. The design limit for the TRUPACT-II is 40 watts; the design limit for the HalfPACT is 30 watts.
- Fissile Mass (Pu-239 FGE) plus RSS Error Less Than or Equal to Payload Limit (Section 3.1): The total measured fissile mass (Pu-239 FGE) plus the total RSS fissile mass error shall be less than or equal to the maximum allowable fissile mass limit established for the payload configuration and waste contents.
- Total Activity plus Error for S100 or S300 Pipe Overpack Payloads Less Than or Equal to 406 Curies (Section 3.3): The total activity for a payload assembly made up of S100 or S300 pipe overpacks plus the error (i.e., one standard deviation) shall be less than or equal to 406 Ci. There is no activity limit for other payloads.

Transportation Certification Official (Section 1.6)

The site Transportation Certification Official shall verify that all of the requirements for the above transportation parameters are met as stated in this document. The site Transportation Certification Official shall sign and date the PATCD upon verifying that the CH-TRAMPAC transportation requirements are met and the payload is qualified for transport. If the requirements are not met, the payload is rejected (payload may be reconfigured and reevaluated against the payload requirements in this document).

Table 6.2-4 – Payload Assembly Transportation Certification Document (PATCD)①

IDENTIFICATION PARAMETERS

Shipment #: _____ **Packaging OCA Body/Lid #:** _____

Payload Assembly Designated for Controlled Shipment?② ○ YES ○ NO

Shipping Category③:_____

Decay Heat Limit③:_____

Hydrogen/Flammable Gas Generation Rate Limit③:_____

Type of Payload: ☐ 55-Gallon Drums ☐ Standard Pipe Overpacks ☐ S100 Pipe Overpacks
☐ S200 Pipe Overpacks ☐ S300 Pipe Overpacks
☐ 85-Gallon Drums ☐ 100-Gallon Drums
☐ SWBs ☐ TDOP

Transportation Packaging: ☐ TRUPACT-II ☐ HalfPACT

Date ICV Closed: _____ **Time ICV Closed:** _____④

BOTTOM PAYLOAD ASSEMBLY COMPOSITION

Container ID	Weight (lbs.)	Error (lbs.)	Decay Heat (watts)	Error (watts)	Fissile Mass (FGE)	2x Error (FGE)	Hydrogen/Flammable Gas Generation Rate⑤⑥⑦	Flammability Index⑥⑦
Subtotal (A)								
Subtotal RSS Error (C)								

TOP PAYLOAD ASSEMBLY COMPOSITION (TRUPACT-II Only)

Container ID	Weight (lbs.)	Error (lbs.)	Decay Heat (watts)	Error (watts)	Fissile Mass (FGE)	2x Error (FGE)	Hydrogen/Flammable Gas Generation Rate⑤⑥⑦	Flammability Index⑥⑦
Subtotal (B)								
Subtotal RSS Error (D)								

PAYLOAD TOTALS

Weight of Pallets, Reinforcing Plates, Slip Sheets, Guide Tubes, Adjustable Slings, etc. (E)_____

Total (A+E [+B (TRUPACT-II only]) Weight:_____lbs. Total RSS Weight Error:_____lbs.

Total Decay Heat:_____watts Total RSS Decay Heat Error:_____watts

Total Fissile Mass:_____FGE Total RSS Fissile Mass Error:_____FGE

Bottom Assembly Weight plus Subtotal RSS Error (A+C) (TRUPACT-II Only) _____lbs.

Top Assembly Weight plus Subtotal RSS Error (B+D) (TRUPACT-II Only) _____lbs.

Total Weight plus Total RSS Error_____lbs.

Total Decay Heat plus Total RSS Error_____watts

Total Fissile Mass plus Total RSS Error_____FGE

PAYLOAD CERTIFICATION PARAMETERS

Decay Heat + Error of Each Analytical Category Payload Container ≤ Limit③

Hydrogen/Flammable Gas Generation Rate of Each Test Category Payload Container ≤ Limit③⑤

Flammability Index of Each Payload Container Meets the Following Condition: 0 ≤ FI ≤ 50,000⑥

Payload Total Gas Release Rate ≤ Limit Calculated in Accordance with Section 6.2.5⑧

Bottom Weight ≥ Top Weight (for TRUPACT-II)

Total Weight plus RSS Error ≤ **7,265** lbs. for TRUPACT-II; ≤ **7,600** lbs. for HalfPACT

Decay Heat plus RSS Error ≤ **40** watts for TRUPACT-II; ≤ **30** watts for HalfPACT

Fissile Mass (Pu-239 FGE) plus RSS Error ≤ _____ FGE

Total Activity plus Error for S100 or S300 pipe overpack payloads ≤406 curies.

I certify that the above payload assembly meets all the requirements for shipment as stated in the CH-TRAMPAC, current revision. The payload assembly is approved for shipment.

_____ / _____

TRANSPORTATION CERTIFICATION OFFICIAL / DATE

Notes:

① Follow instructions in Section 6.2.2.

② If the payload is designated for controlled shipment, Table 6.2-5 must also be completed for the shipment of this payload as specified in Section 6.2.3.

③ Not applicable if mixing shipping categories pursuant to Section 6.2.4.

④ Required only for payloads designated for Controlled Shipment (10 days).

⑤ Required for payloads containing test category payload containers.

⑥ Applicable if mixing shipping categories pursuant to Section 6.2.4.

⑦ If the payload assembly consists of overpacked configurations, indicate not applicable (e.g., "NA – Mixing") and record the hydrogen/flammable gas generation rate and FI values for each overpacked container on the appropriate OPCTCD.

⑧ Applicable if shipping pursuant to Section 6.2.5.

6.2.3 Shipments Designated as Controlled Shipments

Compliance with the 10-day shipping period is administratively controlled in accordance with the conditions of Appendix 3.6 of the CH-TRU Payload Appendices[1] and through the following steps. The steps must be completed by the site Transportation Certification Official, or designee, and the designated WIPP operations personnel, as applicable.

Loading Time

The loading time begins with the closure of the ICV and ends with the departure of the shipment from the site. The loading time is limited to a maximum of 24 hours. The following steps must be completed to ensure compliance with the 24-hour loading time:

6.2.3.1 Review PATCD to determine date and time that the ICV closure was completed. Record date and time on the Site Control Checklist for Controlled Shipments shown in Table 6.2-5. Table 6.2-5 may be reformatted for site use provided that the same information is recorded.

6.2.3.2 Note date and time that the shipment containing the loaded package is ready to depart the site destined for WIPP. Record date and time on the Site Control Checklist for Controlled Shipments.

6.2.3.3 Review dates and times recorded in Steps 6.2.3.1 and 6.2.3.2 to calculate total loading time. If total loading time is less than or equal to 24 hours, proceed to Step 6.2.3.4. If total Loading Time exceeds 24 hours, the package must be vented and the closure process must be repeated. Return to Step 6.2.3.1 above.

6.2.3.4 Indicate compliance with the 24-hour loading time by signature on the Site Control Checklist for Controlled Shipments.

Unloading Time

The unloading time begins with the arrival of the shipment at WIPP and ends with the venting of the package. The maximum unloading time is 24 hours. The following steps must be completed to document compliance:

6.2.3.5 Note date and time that the package arrives at WIPP. Record date and time on the WIPP Control Checklist for Controlled Shipments shown in Table 6.2-6. Table 6.2-6 may be reformatted for WIPP use provided that the same information is recorded.

6.2.3.6 Using the date and time recorded in Step 6.2.3.5, ensure that the package is vented within 24 hours of the arrival of the shipment at WIPP by implementing the WIPP unloading procedures specific to controlled shipments. Record date and time to show compliance.

6.2.3.7 Indicate compliance with the 24-hour unloading time by signature on the WIPP Control Checklist for Controlled Shipments.

Table 6.2-5 – Site Control Checklist for Controlled Shipments①

Shipment No. _____ Packaging No._____

To be completed by the site Transportation Certification Officer, or designee, for each package designated as a controlled shipment:

CH-TRAMPAC Section No.	Activity	Recorded Date	Recorded Time	Completion of Activity (Indicate by checkmark [√])
6.2.3.1	Record date and time of ICV closure			
6.2.3.2	Record date and time the shipment containing the loaded package is ready to depart from the site destined for WIPP			
6.2.3.3	Calculate and record total **Loading Time** [Limit = 24 hours]			
	Total Loading Time ≤1 day, proceed to No. 6.2.3.4. *Total Loading Time > 1 day,* ***STOP****. Vent package and repeat closure process.*			
6.2.3.4	I certify that the above data is accurate and compliant with the Loading Time limit of 24 hours, as specified in Section 6.2.3 of the CH-TRAMPAC. _____ / _____ TRANSPORTATION CERTIFICATION OFFICIAL (OR DESIGNEE) DATE			

Note:

① Controlled shipments (10 days) shall be made in accordance with the conditions specified in Appendix 3.6 of the CH-TRU Payload Appendices[1] and Section 6.2.3. This table may be reformatted for site use provided that the same information is recorded.

Table 6.2-6 – WIPP Control Checklist for Controlled Shipments①

Shipment No. _____ Packaging No._____

To be completed by designated WIPP Operations personnel for each package designated as a controlled shipment:

CH-TRAMPAC Section No.	Activity	Recorded Date	Recorded Time	Completion of Activity (Indicate by checkmark [√])
6.2.3.5	Record date and time that the package arrives at WIPP			
6.2.3.6	Vent package within 24 hours of date and time recorded above and record vent date and time			
6.2.3.7	I certify that the above data is accurate and compliant with the Unloading Time limit of 24 hours, as specified in Section 6.2.3 of the CH-TRAMPAC. _____ / _____ WIPP OPERATIONS PERSONNEL DATE			

Note:

① Controlled shipments (10 days) shall be made in accordance with the conditions specified in Appendix 3.6 of the CH-TRU Payload Appendices[1] and Section 6.2.3. This table may be reformatted for WIPP use provided that the same information is recorded.

6.2.4 Mixing of Shipping Categories

Appendix 2.4 of the CH-TRU Payload Appendices[1] describes the logic for mixing shipping categories for compliance with flammable (gas/VOC) concentration limits, including the determination of the FI.

Mixing of shipping categories is allowed for direct loaded and overpacked payload configurations by ensuring that each payload container or overpacked container does not contain a flammable mixture of gases. Mixing of shipping categories is allowed only within authorized payload configurations comprised of a single payload container type as listed in Table 2.1-1 of the CH-TRAMPAC. (Note: Standard pipe overpacks may be assembled in a TRUPACT-II or HalfPACT payload with 55-gallon drums. Standard pipe overpacks in this payload assembly are considered 55-gallon drums and are subject to the requirements of Section 2.9.1 and Section 3.1.) Each payload container or overpacked container is assessed through the calculation of the FI for the container, which accounts for the properties of each of the other containers in the assembly or overpacked configuration, which may include dunnage containers.

A payload is qualified for shipment only if the FI of each payload container or overpacked container is a non-negative number less than or equal to 50,000. If one or more containers fail(s) the FI requirement, the payload or overpacked configuration shall be reconfigured until all containers satisfy this requirement. Otherwise, containers not meeting the FI requirement shall be placed in the test category or rejected from transport and subject to mitigation or repackaging. The FI determination can be performed either manually or by the use of a verified/validated software package.

6.2.5 Payload Total Gas Release Rate Compliance Evaluation

For containers of Waste Type IV that exceed the total gas release rate limits in Table 5.2-11 in Section 5.2.5.4.5, compliance with the packaging design pressure limit may be demonstrated by compliance with the total gas release rate limit determined for the payload in which it is assembled. These Waste Type IV payload assemblies may be comprised of other Waste Type IV containers, non-Waste Type IV containers, and/or dunnage containers. Each payload assembly is evaluated through the calculation of the payload total gas release rate, which accounts for the total gas release rate of each container in the assembly into the ICV.

The total gas release rates of containers of Waste Type IV ($TGRR_{i\ IV}$) shall be determined in accordance with Section 5.2.5.

For payload assemblies of Waste Type IV containers mixed with containers of other waste types, the total gas release rate of the non-Waste Type IV containers ($TGGR_{i\ other}$) shall be calculated using the total decay heat of the container as follows:

$$TGRR_{i\ other} = \frac{Q_i\,(G(netgas)_i \text{ molecules/100eV})}{N_A\,1.602(10)^{-19}} \qquad (1)$$

where,

Q_i = Decay heat of container *i* (watts)

$G(netgas)_i$ = Total gas temperature corrected effective G value (net gas) for container *i* (molecules of gas formed/100 eV emitted energy)①

N_A = Avogadro's number = $6.0225(10)^{23}$ molecules/mole.

Note:

① Net gas G values in Appendix 3.2 of the CH-TRU Payload Appendices[1] are corrected using the Arrhenius relation to Waste Type IV test temperatures corresponding to the maximum decay heat per packaging shown in Table 5.2-10 of Section 5.2.5.4.1.

The payload total gas release rate, PTGRR, is the sum of the total gas release rates of the gas generating containers making up the payload assembly as follows:

$$PTGRR = \sum_{i=1}^{n_{IV\ containers}} TGRR_{i\ IV} + \sum_{i=1}^{n_{other\ containers}} TGRR_{i\ other} \qquad (2)$$

A payload qualifies for shipment only if the payload total gas release rate is less than the payload total gas release rate limit calculated below. If the payload total gas release rate exceeds the payload total gas release rate limit, the payload shall be reconfigured until this requirement is satisfied. The determination of compliance with the payload total gas release rate limit can be performed either manually or by the use of a verified/validated software package. The payload total gas release rate limit, PTGRRL, is calculated as:

$$PTGRRL = 2.26(10)^{-8} \times V_{void} \qquad (3)$$

where,

V_{void} = Available void volume inside the packaging ICV cavity, which includes the void volume of any dunnage containers.

From the values presented in Table 6.2-7, the void volume of a payload assembly is calculated as:

$$V_{void} = V_{ICV} + n_{dunnage} \times V_{dunnage} \quad (4)$$

where,

V_{ICV} = Void volume inside the ICV and outside the containers

$n_{dunnage}$ = Number of dunnage containers

$V_{dunnage}$ = Void volume of dunnage containers.

Table 6.2-7 – Void Volume Values for Payload Assembly Configurations

Type of Payload	TRUPACT-II Payload Assembly			HalfPACT Payload Assembly		
	Maximum Number of Containers	Void Volume Values (liters)		Maximum Number of Containers	Void Volume Values (liters)	
		ICV	Dunnage		ICV	Dunnage
55-Gallon Drums	14	2,450	208	7	1,846	208
Direct Load SWBs	2	1,750	1,750	1	1,496	NA②
One SWB overpack of 55-gallon drums	2①	2,620	1,750	1	2,366	NA②
Two SWB overpacks of 55-gallon drums	2	3,490	NA②	NA②	NA②	NA②
85-Gallon Drums	8	2,087	321	4	1,664	321
100-Gallon Drums	6	2,715	378	3	1,978	378

Notes:

① Payload comprised of one SWB overpack of 55-gallon drums and one dunnage SWB.

② NA = Not applicable.

This page intentionally left blank.

7.0 QUALITY ASSURANCE

This section describes the QA programs applicable to the CH-TRAMPAC. QA programs applicable to procurement, design, fabrication, assembly, testing, use, maintenance, and repair of the TRUPACT-II or HalfPACT packaging are found in Section 9.0 of the TRUPACT-II SAR[1] or the HalfPACT SAR[2].

7.1 QA Requirements for Payload Compliance

Certification of authorized contents for shipment in the TRUPACT-II or HalfPACT shall be performed under a written QA program that provides confidence, for both the shipper and receiver, that the CH-TRAMPAC requirements have been met. All waste shall be described in an approved content code.

[1] U.S. Department of Energy (DOE), *TRUPACT-II Shipping Package Safety Analysis Report*, USNRC Certificate of Compliance 71-9218, U.S. Department of Energy, Carlsbad Area Office, Carlsbad, New Mexico.

[2] U.S. Department of Energy (DOE), *HalfPACT Shipping Package Safety Analysis Report*, USNRC Certificate of Compliance 71-9279, U.S. Department of Energy, Carlsbad Area Office, Carlsbad, New Mexico.

This page intentionally left blank.

7.2 QA Compliance and Verification

Compliance methods are documented in DOE-CBFO-approved programmatic TRAMPACs and/or waste-specific data TRAMPACs. The DOE-CBFO managing and operating contractor performs surveillance of users' payload compliance procedures or data package to ensure the requirements of this CH-TRAMPAC are met. The DOE-CBFO will periodically audit users' payload compliance QA programs.

This page intentionally left blank.