OFFICE OF THE SECRETARY
CORRESPONDENCE CONTROL TICKET

Date Printed: Mar 09, 2005 10:09

PAPER NUMBER:	LTR-05-0121	**LOGGING DATE:**	03/08/2005
ACTION OFFICE:	EDO		To: Dyer, NRR Appropriate Action
AUTHOR:	Bob Leyse		
AFFILIATION:			cys: EDO DEDMRS DEDH DEDM AO DEDR RES
ADDRESSEE:	Nils Diaz		
SUBJECT:	Panel on risk informing 50.46 (ECCS requirements) at RIC 2005		
ACTION:	Appropriate		
DISTRIBUTION:			
LETTER DATE:	03/04/2005		
ACKNOWLEDGED	No		
SPECIAL HANDLING:	Made publicly available in ADAMS via SECY/EDO/DPC		
NOTES:			
FILE LOCATION:	ADAMS		
DATE DUE:		**DATE SIGNED:**	

From: <Bobleyse@aol.com>
To: <TEC@nrc.gov>
Date: Fri, Mar 4, 2005 12:14 PM
Subject: Panel on Risk Informing 50.46 (ECCS Requirements) at RIC 2005

Dear Mr. Collins:

You may recall that I requested a spot on this panel. My concern is that the panel may overlook vital factors in reforming 50.46. Please provide the members of the panel, Dr. Sheron, Professor Hochreiter, Dr. Ader, Mr. Harrison and Mr. Brown, with copies of the attachments to this e-mail.

Thank you,

Robert H. Leyse bobleyse@aol.com
P. O. Box 2850
Sun Valley, ID 83353

CC: <chairman@nrc.gov>, <lehnuc@engr.psu.edu>, <BWS@nrc.gov>, <CEA@nrc.gov>

An Unmet Challenge: Consideration of Heavy Fouling in Reactor Accident Analyses

Robert H. Leyse, CEO

Inz, Inc., PO BOX 2850, Sun Valley, ID 83353
bobleyse@aol.com

ABSTRACT

The impact of heavy fouling of fuel elements in light water cooled and moderated nuclear reactors has not been considered in the analysis of severe accidents such as Reactivity Insertion Accidents and Loss of Coolant Accidents. This is the case even though operation of nuclear power reactors with significant fouling deposits is commonplace. [1,2,3,4,5,6] Fouling deposits have substantial thermal resistance. This has led to fuel element failures in several instances as the zirconium alloy cladding has failed due to high temperature corrosion.[3,5,6] Although the details of current fouling have not been disclosed, in one case[3] the deposits have been described as, "...unusually heavy...which induced the corrosion by thermally insulating the fuel rods..." and "...rods that failed had heavy crud with clumpy formations." Such heavy clumpy fouling is complex with substantial thermal resistance. Relatively straightforward fouling at the Experimental Boiling Water Reactor was classified in terms of the thickness and the thermal conductivity.[7] Thickness of the fouling was 0.013 cm, the thermal conductivity was 0.008 W/cm-C; thus the heat transfer coefficient was 0.6 W/(cm^2)(C). The peak heat flux in today's large light water reactors is in the range of 150 W/cm^2 and the temperature gradient for EBWR-type fouling would be 250 C. However, the effective heat transfer coefficient of the heavy, clumpy fouling in today's reactors is likely substantially less than the EBWR case. Clearly, the heat transfer characteristics are vastly degraded in contrast to clean as-built cores. The challenge for the licensees of nuclear power reactors is to produce thorough evaluations of the impact of heavy fouling on severe accidents. The findings are needed for the accurate licensing of water-cooled nuclear reactors.

The United States Nuclear Regulatory Commission has evaluated two related Petitions for Rulemaking[8,9] that have been initiated by the author regarding these matters. Currently the Nuclear Regulatory Commission is evaluating a third Petition for Rulemaking[10] and the results of those deliberations will be presented.

References

1. United States Patent, US 6,396,892, Robert D. Varrin, May 28, 2002.
2. Ultrasonic Fuel Cleaning Process, EPRI Press Release, March 19, 2003.
3. USNRC Licensee Event report 50-458/99-016-00, March 1, 2000.
4. Kovan, D., Fuel damage at Paks-2 leads to incident uprate, *Nuclear News,* June 2003, 40-41.
5. Transcript, Reactor Fuels Subcommittee of the Advisory Committee on Reactor Safeguards, United States Nuclear Regulatory Commission, April 23, 24, 1998.
6. Transcript, Reactor Fuels Subcommittee of the Advisory Committee on Reactor Safeguards, United States Nuclear Regulatory Commission, September 30, 2003.
7. Breden and Leyse, 1960, Water chemistry and fuel element scale in the EBWR, ANL-6136.
8. Leyse, Petition for Rulemaking to USNRC, PRM 50-73, September 3, 2001.
9. Leyse, Petition for Rulemaking to USNRC, PRM 50-73A, November 4, 2001.
10. Leyse, Petition for Rulemaking to USNRC, PRM 50-76, May 1, 2001.

Mail Envelope Properties (42289761.AFD : 21 : 47869)

Subject: Panel on Risk Informing 50.46 (ECCS Requirements) at RIC 2005
Creation Date: Fri, Mar 4, 2005 12:13 PM
From: <Bobleyse@aol.com>

Created By: Bobleyse@aol.com

Recipients
nrc.gov
OWGWPO01.HQGWDO01
TEC (Timothy Collins)

nrc.gov
owf5_po.OWFN_DO
CHAIRMAN CC

nrc.gov
owf4_po.OWFN_DO
BWS CC (Brian Sheron)

nrc.gov
twf5_po.TWFN_DO
CEA CC (Charles Ader)

engr.psu.edu
lehnuc CC

Post Office	Route
OWGWPO01.HQGWDO01	nrc.gov
owf5_po.OWFN_DO	nrc.gov
owf4_po.OWFN_DO	nrc.gov
twf5_po.TWFN_DO	nrc.gov
	engr.psu.edu

Files	Size	Date & Time
MESSAGE	423	Friday, March 4, 2005 12:13 PM
TEXT.htm	998	
AN UNMET CHALLENGE.doc		51200
unmetb.doc	637440	
Mime.822	946880	

Options
Expiration Date: None
Priority: Standard

Reply Requested:	No
Return Notification:	None
Concealed Subject:	No
Security:	Standard

AN UNMET CHALLENGE: CONSIDERATION OF HEAVY FOULING IN THE ANALYSIS OF SEVERE ACCIDENTS

Robert H. Leyse, CEO
Inz, Inc., PO BOX 2850, Sun Valley, ID 83353
bobleyse@aol.com

ABSTRACT

The impact of heavy fouling of fuel elements has not been considered in the analysis of severe accidents such as Reactivity Insertion Accidents and Loss of Coolant Accidents. Operation of nuclear power reactors with significant fouling deposits is commonplace. Fouling deposits have substantial thermal resistance. This has led to fuel element failures in several instances as the zirconium alloy cladding has failed due to high temperature corrosion. Although the details of current fouling have not been disclosed, in several instances the deposits have been unusually heavy with clumpy formations. Such heavy clumpy fouling is complex with substantial thermal resistance. Relatively straightforward fouling at the Experimental Boiling Water Reactor (EBWR) during the late 1950s was classified in terms of the thickness and the thermal conductivity. Thickness of the scale was 0.013 cm, the thermal conductivity was 0.008 W/cm-C; thus the heat transfer coefficient was 0.6 W/(cm^2)(C). The peak heat flux in today's large light water reactors is in the range of 150 W/cm^2 and the temperature gradient for EBWR-type fouling would be 250 C. However, the effective heat transfer coefficient of the heavy, clumpy fouling in today's reactors is likely substantially less than the EBWR case. The real heat transfer is thus vastly degraded in contrast to the clean cores of current safety analyses.

1. INTRODUCTION

The renowned heat transfer expert, W. H. McAdams once observed (McAdams, 1942, p. 316), "The small amount of scale necessary to reduce a high (heat transfer) coefficient by a substantial amount is not generally realized." More recently, at the 50th anniversary meeting of the American Nuclear Society, the prominent nuclear safety expert, Theodore Rockwell asserted (Rockwell, 2004, p.40), "There is a good realistic story to tell based on facts, knowledge, and understanding. Rockwell was followed by Eltawila of the United States Nuclear Regulatory Commission who added, "Realism comes from using the best information you have from science, engineering, and operating experience."

The heat transfer characteristics of the fouling in today's LWRs have not been reported. However, operational experience reveals that with fouling and corrosion the fuel pin heat transfer characteristics are vastly degraded in contrast to clean pins. In several instances, the severe fouling has led to corrosion thicknesses sufficient to penetrate the cladding of many fuel pins. At more than 20 units fouling has trapped boron and this led to offsets in the power distribution. In one case, control rod binding was traced to guide tubes that deformed when fouled fuel pins lengthened beyond end space limits and bent. At Paks Units 1-3, reduced flow restricted the power level. Several units now employ ultrasonic means to remove fouling. The impact of fouling has not been considered in the evaluation of reactivity insertion accidents RIAs, loss of coolant accidents or normal operation of water cooled and moderated nuclear power reactors. .

Fouling at the Experimental Boiling Water Reactor during the late 1950s severly limited the experimental program, however the impact on potential accidents has never been disclosed. The impact of fouling on the severity of the reactivity insertion accident at the SL-1 boiling water reactor on January 3, 1961 has not been evaluated.

An assessment of postulated reactivity insertion accidents for operating reactors in the U. S. A. was issued by the United States Nuclear Regulatory Commission (NRC) on March 31, 2004. The lengthy report considers the results of test programs worldwide, but includes no consideration of the impact of fouling on severity of RIAs. There is no thermal analysis of the impact of oxidation or fouling.

The challenge for the licensees of nuclear power reactors is to produce thorough evaluations of the impact of heavy fouling on severe accidents. Leyse has submitted several petitions to the NRC calling for the consideration of fouling in the evaluation of RIAs, LOCAs and normal plant operation. The NRC has denied that fouling is a significant safety issue. In general, the NRC believes that fouling is more accurately described as crud, a very thin loose deposit that has no impact on the hydraulics and thermal hydraulics of operating reactors. Moreover, all of the past and current thermal hydraulic experimental programs worldwide have not considered any impact of fouling,

2. RECENT EXPERIENCE WITH FOULING IN NUCLEAR POWER REACTORS

Thick, tenacious fouling is ubiquitous among the fleet of nuclear power reactors in the U.S. A. and it also occurrs in reactors elsewhere. Following are several examples.

2.1 Fouling at the River Bend Boiling Water Reactor

An analysis of fuel pin failure timing for severe accidents at the River Bend Station (RBS) would be revealing. Entergy issued a Licensing Event Report that partially describes the severe fouling that occurred at RBS during 1998 (King, 2000). Multiple fuel pin failures were attributed to "...an unusually heavy deposition of crud on the fuel bundles." It was, "Determined that an insulating layer of crud caused accelerated fuel rod corrosion." There is no quantitative disclosure of the effective thermal conductivity of the insulating layer of crud. It is disclosed that "Measured zircaloy oxide thickness on high power unfailed HGE bundles was up to 6 mils at the 50" level where the perforations occurred." However, there has been no public disclosure of the measured zircaloy oxide thickness on the failed HGE bundles.

Schneider, et al. (2004. p28) partially describe the River Bend event as follows. *An unusual water chemistry condition was encountered during 1988-99 at one plant (River Bend, Cycle 8) resulting in 7 fuel assembly failures. Although the available water chemistry measurements indicated general conformance to the EPRI Water Chemistry Guidelines, the fule condition was observed to be highly unusual as characterized by an extremely thick, non-uunifirm layer of reactor system corrosion products (crud). The observed failure mechanism at River Bend during cycle 8 was crud-induced accelerated oxidation of the cladding. With the high thermal resistance provided by the the thick crud layer, elevated cladding temperatures were encountered which then resulted in oxidation to the point of failure. It is noted that another event, apparently similar to Cycle 8, occurred at the same plant in Cycle 11(2002-2003) and resulted in 8 fuel failures, this time in non-GNF first-cycle fuel.*

Entergy did not issue a Licensing Event Report describing the extensive fouling of Cycle 11. However, Ruzauskas and Smith (2004) issued a somewhat detailed report of the fouling. Following are excerpts from the abstract of this paper. *Examinations performed during the refueling outage indicated that Span 2 (the axial location between the second and third spacers form the assembly bottom) in both failed and unfailed one-cycle assemblies had an unusually thick and tenacious crud on peripheral rods. The cause of failure was determined to be accelerated oxidation of the cladding in Span2 resulting from unusually heavy deposits of insulating tenacious crud. The most probable cause of the insulating tenacious crud was that copper and zinc were available in sufficient quantity to plug the normal wick boiling paths within the crud or clad oxide resulting in diminished heat transfer in local areas of the cladding surface.*

The reference to wick boiling in the abstract is interesting, however, there is no reference to this in the body of the paper. The paper includes ten figures that reveal several aspects of the severe fouling. See Figure 1 for a typical photograph of the fouled rods and a discussion of the ten figures.

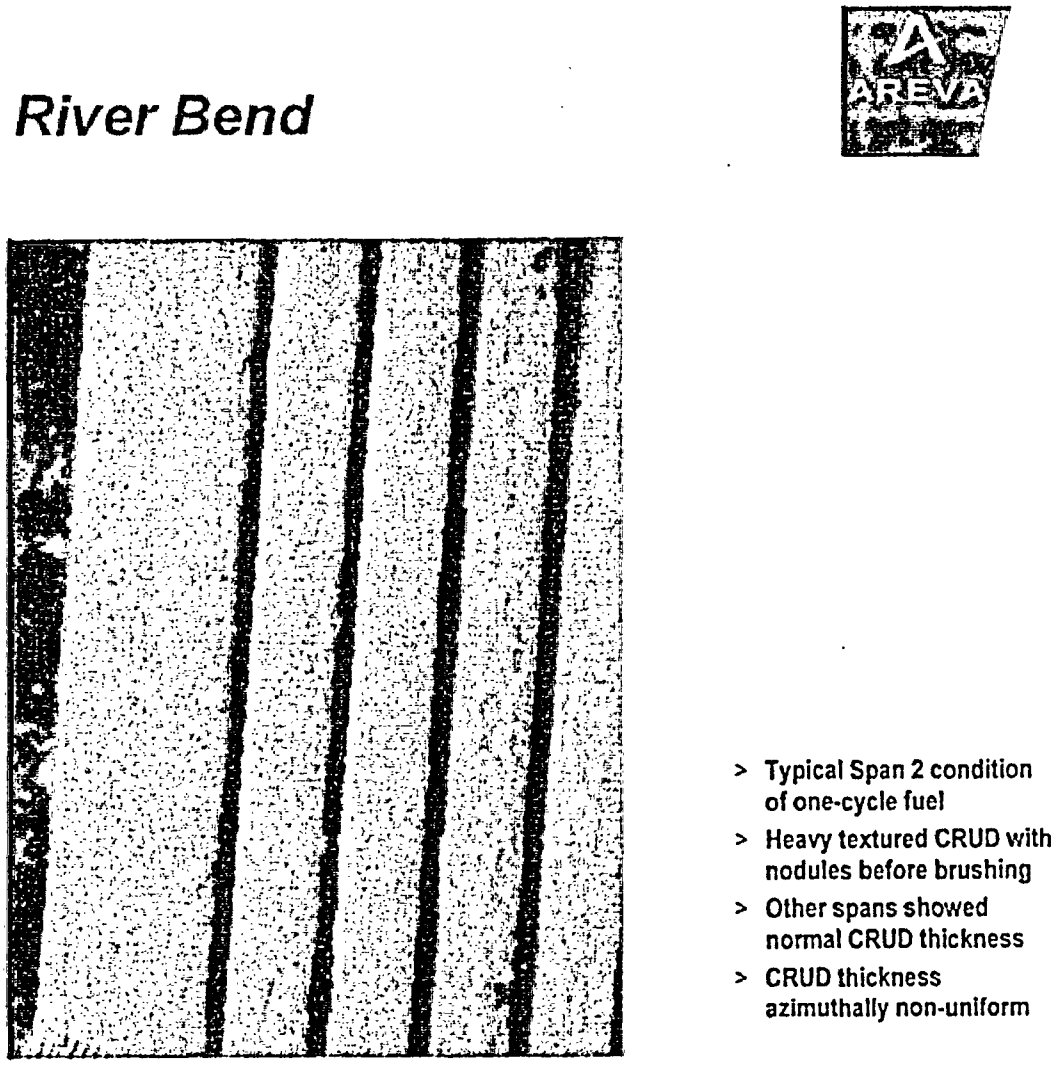

Figure 1: This photograph and the captions are copied from the slide presentation by AREVA staff at the cited conference. The heavy deposits were sufficient to bridge the gap between the two rods on the left side of the above illustration. Other figures that are in the cited reference reveal (quoting from the captions) *Heavy textured crud with nodules in Span 2 before brushing; Areas of spalling crud in Span 2 before brushing; Typical Appearance of Rods in Upper Spans of a Failed Assembly; On Some Assemblies Brushing Span 2 Removed all of the Tenacious Crud; On Other Assemblies Brushing Removed Very Little of the Tenacious Crud in Lower Span 2; Examples of Tenacious Crud that Could not be Removed with Washing and Aggressive Brushing; Example of Rod Bowing in Span 2 on a Failed Assembly; Typical Crud Remaining After an Aggressive Cleaning Operation on Peripheral Rod in Span 2.*

Although the severity of the fouling at River Bend has been most intense in limited regions, it is evident that fouling has been sufficient throughout the entire core to significantly impact reactivity insertion accidents, loss of coolant accidents, and the conduct of normal operations. The investigators consistently refer to the high thermal resistance of the thick crud, but there is no thermal analysis. And the vague inference that "good" crud, via wick boiling, may enhance heat transfer, is unsubstantiated.

2.2 Fouling at other Boiling Water Reactors (BWRs)

The experience at River Bend shows that even with severe fouling the amount of thermally induced fuel element failure has been modest. According to Schneider, et al. (2004) fuel element failures have recently been very infrequent with GNF fuel at other at BWRs. Of course, this does not prove that fouling has not been sufficient to impact reactivity insertion accidents. The authors refer to *Increased Tenacious Crud Deposits on Fuel* as a performance challenge. However, this might be an example of the thoroughness of their fuel reliability initiatives since no data are reported on the extent of the problem. They report: *Detailed post-irradiation examinations of fuel from the initial NobleChem™ application and a subsequent reapplication at the Duane Arnold plant were conducted at the GE Vallecitos hotcell facility. These examination results largely sh0ow a thick Zn-rich tenacious crud layer with relatively little oxide growth. The inspections confirmed that the observed spalling was due to the thick tenacious crud and was not oxide; corrosion in general was low.*

2.3 Fouling at Paks Units 1-3

An analysis of fuel pin failure timing for the Paks Units 1-3 would be revealing. In a May 2003 report to the Chairman, Hungarian AEC, the extensive fouling of the Paks units is candidly discussed. There is no description of the thermal resistance of the fouling or the amount of zircaloy corrosion. However, the fouling (magentite)) has been extensive. Quoting, "...magnetite deposits in the fuel assembles increased and the cooling water flow-rate decreased. Consequently the power of Units 1-3 had to be decreased." Chemical cleaning of fuel elements in batches of seven elements became routine. In 2002, Framatome ANP expanded the cleaning process to 30 element batches.

On 10 April 2003, while the assemblies were being cleaned for Unit 2, severe damage occurred to an entire batch. The state of the fuel prior to the accident has not been disclosed. But as this data including the extent of fouling become available, it is likely that analysis will yield further insights on the impact of fouling on severe accidents. The cleaning process for the 30 element batch was designed by Framatom ANP. V. Asmolov, the Director of the Kurchatov Institute observed, "... it was a hand-made accident caused by those who, mildly speaking, clumsily thrust where they shouldn't. This is a precious experience."

2.4 Axial Offset Anomaly (AOA)

More than 20 LWR's have had power distribution shifts caused by boron-loaded fouling. EPRI reports, *The root cause of AOA is corrosion product deposition in the upper spans of fuel assemblies as a result of sub-cooled nucleate boiling.* EPRI does not report the thermal conductivity of the deposits or the extent of zirconium oxidation. Deposits were scraped from several fuel assemblies following a cycle that experienced AOA. The thickness of the samples was in the range of 125 microns, however, that likely does not include zirconium oxides that are integral with the base cladding. Again, it is clear that the deposits constitute a significant thermal resistance that should be incorporated in analyses of reactor accidents

Frattini, P. L., et al., 2001, have apparently described a relationship between PWR primary chemistry and axial offset anomaly. However, the report is copyrighted and apparently has not been publicly disclosed to the regulatory authorities and is thus not detailed here.

NRC Information Notice 97-85 clarifies AOA: *Axial offset (AO) is a measure of the difference between power in the upper and lower portions of the core. This difference must remain within limits established in the technical specifications to ensure that both SDM and clad local peaking factors are not exceeded. Exceeding these limits could result in the reactor fuel exceeding 10 CFR 50.46 limits on fuel clad temperature (1204C). If the reactor approaches these limits, compensatory measures, including a power reduction, must be taken to maintain the reactor within its operational limits.*

However, the Notice does not include any discussion of the very substantial temperature increase of the limiting fuel pins that results from the same fouling that leads to the AOA. This temperature increase likely exceeds 250C, however the consequent increase beyond the 1204C limit during loss of collant accidents is far greater than 250C because the fuel rods bend, distort and burst during the accident. There is a simultaneous set of physical and chemical occurrences. The fouling layers and the zirconium oxide layers become cracked, broken, shocked and loosened while zirconium-water reactions proceed at accelerating rates as additional zirconium is exposed to the water steam conditions at increasing temperatures. .

2.5 Ultrasonic Fuel Cleaning

Operators of several pressurized water reactors and one boiling water reactor have deployed ultrasonic fuel cleaning (Varrin, 2002) for mitigation of axial offset anomaly via crud removal. The patent owner, EPRI, promotes the process as follows: *Ultrasonic fuel cleaning is a patented EPRI technology that removes deposited corrosion products from nuclear fuel pin surfaces by emitting radially distributed ultrasonic waves through the fuel pin bundle, followed by the use of water to carry crud from the fuel to the filters. The industry has used the technology with great success at several pressurized water reactor (PWR) nuclear power plants for mitigation of axial offset anomaly as well as the ancillary benefit of radiation field reduction.*

3. EARLY EXPERIENCE WITH FOULING AT LOW POWER BWRs

During the late 1950s and early 1960s corrosion of aluminum structures led to severe fouling probems at two low powered boiling water reactors that were developed at the Argonne National Laboratory.

3.1 Experimental Boiling Water Reactor (EBWR)

The Experimental Boiling Water Reactor (EBWR) was designed and operated by Argonne National Laboratory during the late 1950s and early 1960s. An unfortunate selection of aluminum alloy for core filler pieces led to deposits of hydrated alumina on the zirconium clad fuel elements. Breden and Leyse, 1960, detailed the adverse consequences. Thickness of the fouling was 0.013 cm, the thermal conductivity was 0.008 W/cm-C; thus the heat transfer coefficient was 0.6 W/(cm2)(C). The peak heat flux in today's large light water reactors is in the range of 150 W/cm2 and the temperature gradient for EBWR-type fouling would be 250 C. However, the heat transfer coefficient for the combined fouling and zircaloy oxide of today's units is likely substantially less than the EBWR case.

3.2 Argonne Low Power Reactor (SL-1)

The SL-1 was destroyed in a Reactivity Insertion Accident (RIA) on January 3, 1961. Fouling of the aluminum clad fuel plates likely intensified the severity of the accident. However, fouling was not considered by the analysts who investigated this RIA. Here is a quote from GE Report, Additional Analysis of the SL-1 Excursion, Report IDO-19313, 1962: *The thickness of the cladding has an important effect on the magnitude of the excursion. Because of the extremely short period, this 0.89 mm cladding became an effective thermal insulator and impeded the flow of heat to the reactor water where it could initiate shutdown of the reactor.* Now, inasmuch as the thermal conductivity of aluminum is about 200 times greater than the corrosion on the fuel plate, a corrosion layer only 0.00445 millimeters thick would have the same temperature gradient as 0.89 mm of aluminum cladding. Alternatively, the measured corrosion product thickness of 0.09 mm has 20 times the temperature gradient of the aluminum cladding. Ignoring the corrosion thus yields a grossly incomplete analysis in determining turnaround characteristics.

4.0 FOULING AND RUNAWAY

There has never been a runaway zirconium water chemical reaction in a nuclear power reactor that was induced by fouling. However, there have been cases of rapid zirconium (zirconium alloy) reactions with water. One case was the rapid oxidation that occurred during the Chernobyl accident. And, during the accident at Three Mile Island there were likely times during which the cladding reaction was relatively rapid. As is clear from the River Bend experience, severe fouling leads to extensive corrosion of the cladding. At River Bend, there was no runaway zirconium water reaction. However, with the very thick deposits, it is not clear that limited runaway was not imminent. Following are two experiences with runaway that occurred during documented test programs.

4.1 Runaway During a Severe Fuel Damage Scoping Test

On Feb. 22, 1983, MacDonald of Idaho National Engineering Laboratory (INEL), in testimony to the Advisory Committee on Reactor Safety (ACRS) discussed a destructive test in the Power Burst Facility (PBF). A 32 rod array of PWR 17x17 fuel, 36 inches long, was heated to high temperature with fission heating and then exposed to a steam/water mix. MacDonald stated, "We observed rapid oxidation of the lower portion of the bundle. It wasn't expected. It cannot be calculated with existing models. It is a flame-front phenomenon which is not addressed in the existing models. It will probably be addressed in the coming months or years. ... Think of a sparkler. That kind of phenomenon. One of the problems with the existing models, all the axial loadings are extremely course. They just do not deal with the spread of a zircaloy fire." This was a case of substantial and unexpected runaway, and contrary to MacDonald's forecast, the problem has not been addressed.

4.2 Runaway During FLECHT Run 9573

A series of experiments called Full Length Emergency Cooling Heat Tansfer (FLECHT) was initiated during the late 1960s and continues to this day under multiple programs at many laboratories. The early tests were conducted with simulated fuel element assemblies. A 7 by 7 array of electrically powered stainless steel clad heaters, 12 feet long, was preheated to temperature in the range of 1000 to 1300 °C and then bottom-flooded with cooling water. Temperatures along the test rods were monitored with thermocouples that were mounted internally. A limited number of tests were run with zircaloy clad heaters.

The extensive failure of the FLECHT assembly at 18 seconds after reflood was not anticipated. (Limited runaway.) This may be fertile territory for SCDAP/RELAP5-3D. Tasks would include analysis of Run 9573 as well as design and analysis of further tests.

In issuing its document, "Acceptance Criteria for Emergency Core Cooling Systems for Light-Water Cooled Nuclear Reactors-Opinion of the Commission," Docket No. RM50-1, December 28, 1973, the Commission concluded, "It is apparent , however, that more experiments with zircaloy cladding are needed to overcome the impression left from run 9573." It is a fact that more experiments of the type called for have not been conducted.

4.3 Discussions of Runaway at the Advisory Committee for Reactor Safeguards (ACRS)

The USNRC is currently working on revisions to rule 10 CFR 50.46 concerning emergency core cooling systems for reactors. The process is called risk-informing the regulation. The ACRS discussions of Friday, May 31, 2002, are revealing in that several aspects of the revisions were discussed, however, the ubiquitous fouling of today's LWRs was not considered. This was a combined meeting of three of the most influential subcommittees of the ACRS: Materials and Metallurgy; Thermal Hydraulic Phenomena & Reliability and Probabilistic Risk Assessment

Member Graham B. Wallis was especially enraged by the limited approaches to fuel integrity under LOCA conditions. In response to detailed descriptions of fracture of corroded specimens of

cladding from irradiated power reactor fuel he asserted: "It seems to be that both these coursing tests and hitting tests, impact tests and the squeezing tests are not really typical of the loads imposed on the real cladding.. I keep wondering what the relevance of all these tests are to the real truth." He also reacted to the discussions of runaway, "I think when you come back and talk about run-away to this committee you better have a criterion for run-away and not this sort of vagueness about heat transfer."

S. Bajorek of the NRC staff described Non-Conservatisms in the present day Appendix K (10 CFR 50.46): "Now the processes that we've identified over the last few months which are strong candidates that need to be corrected are downcomer boiling, reflood ECC bypass and fuel relocation. Bajorek discussed fuel relocation as follows: "The issue of relocation has been around for several years. We hope to get better information in some of the newer tests that are being devised right now. They are going to be running some tests with better instrumentation on the nuclear rods to try to get at fuel relocation which has been observed in tests in Germany, France and the U.S. When we get this ballooning that occurs in the rod, it's possible that these fragmented pellets due to the vibrations can migrate down into the burst and rupture zone. The typical assumption in Appendix K is that these pellets remain as a concentric stack. Now I was talking to Dr. Ford who said why is this cladding temperature going down after it swells. It's good because you've swollen the cladding away from its heat source. If you are at low temperatures and zirc-water doesn't make any difference, this is a fin. It's not a fin if you consider fuel relocation. It becomes much worse if there is a rupture involved and you have zirc-water reaction because now you've relocated the pellets, your local power is increased, you have very good communication now between the pellet fragments and the cladding itself. I have lost that fin effect. You see varying estimates on this. But we are identifying this as something that needs to be accounted for in future models."

Those direct quotes from Bajorek are revealing. The impact of fuel relocation on cladding heat transfer, temperatures, and oxidation reactions is emphasized. However, the very definite impact of fouling on the course of a LOCA is not considered. This is the case even though fouling is known to significantly impact the properties of the fuel pins at the beginning of LOCA. . The current 10 CFR 50.46 limits the calculated cladding temperature to 1200 °C. With severe fouling, the cladding temperature during steady state power operation could exceed the starting temperature values in present LOCA documents by several hundred °C.

5. THE IMPACT OF FOULING ON SEVERITY OF REACTIVITY INITIATED ACCIDENTS (RIAs) HAS BEEN OVERLOOKED

The U. S. nuclear power industry and the U. S. NRC have focused on the severity of RIAs in studies that are directed to extending burnup limits for PWR and BWR fuel. These studies have not considered the impact of fouling on the severity of RIAs even though fouling is ubiquitous among the worldwide fleet of PWRs and BWRs. A few years ago the NRC listed seven activities on high-burnup fuel research. The following quotation is from the NRC's then available document called *HIGH-BURNUP FUEL RESEARCH.*

" A list of current NRC research activities on high-burnup fuel is shown below.

1. ANL (NRC) Hot Cell LOCA Tests of Fuel Rods and Mechanical Properties of Cladding
2. PNNL (NRC) Steady-State and Transient Fuel Rod Codes and Analysis
3. BNL (NRC) Neutron Kinetic Codes and Analysis of Plant Transients
4. Halden (Norway) Reactor Tests of Fuel Rods in Steady State and Mild Transients
5. Cabri (France) Reactivity Accident Tests of Fuel Rods and Related Programs
6. NSRR (Japan) Reactivity Accident Tests of Fuel Rods and Related Programs
7. IGR (Russia) Reactivity Accident Tests of Fuel Rods and Related Programs"

Then, on June 12, 2002, the U. S. nuclear industry lobby organization, the Nuclear Energy Institute, provided the NRC with EPRI Report 1002865, *Topical Report on Reactivity Initiated Accidents: Bases for RIA Fuel Rod Failures and Core Coolability Criteria.* This report purports to

provide, "Revised acceptance criteria (that) have been developed for the response of light water reactor (LWR) fuel under reactivity initiated accidents (RIA). Development of these revisions is part of an industry effort to extend burnup levels beyond currently licensed limits. The revised criteria are proposed for use in licensing burnup extensions or new fuel designs." Clearly, the thrust of EPRI Report 1002865 is to extend burnup levels. There is no consideration of fouling as a significant factor in the severity of RIAs.

Next, on March 31, 2004, the NRC (Thadani, 2004) issued Research Information Letter No. 0401, "An Assessment of Postulated Reactivity-Initiated Accidents for Operating Reactors in the U. S." In the final paragraph of its cover letter to RIL 0401, the NRC states: "We hope the attached assessment will provide NRR with independent information that will help in the review of EPRI Report 1002865, 'Topical Report on Reactivity Initiated Accidents: Bases for RIA Fuel Rod Failures and Core Cool ability Criteria.' The RES staff are available to assist NRR with that review, and RES is prepared to subsequently revise Regulatory Guide 1.77 on RIA safety analysis as indicated in the updated program plan," In another paragraph of this cover letter, the NRC, for the first time ever, asserts that, "It should be noted that cladding failure thresholds vary only weakly with burnup level. Cladding corrosion (oxidation) which might differ widely for different cladding materials at the same burnup was found to be the most important variable."

In a clarifying letter to Leyse (Paperiello, 2004, APPENDIX A) the NRC asserts that there is no need to account for crud deposits in the analysis of RIAs. In paragraph 4, the NRC explains, "Going one level deeper in technical detail, we can draw a further distinction between the effects of oxide and crud. Specifically, the oxidation process releases hydrogen, some of which is absorbed by the zirconium-based cladding alloy, where it embrittles the cladding and could lead to cladding failure during an RIA power transient. By contrast, crud sits on top of the oxide and does not produce any embrittling products that migrate into the cladding metal. Therefore, crud has only a secondary effect, as it provides some insulation and leads to slightly higher cladding temperatures that accelerate oxidation. Nonetheless, the correlation of RIL-0401 explicitly accounts for total oxidation, so crud has no additional effect and there was no need to account for crud deposits in that analysis." It is noteworthy that Paperiello refers to hydrogen absorption as a cause of embrittlement of the cladding alloy, however, he makes no mention of dissolved oxygen in the zirconium alloy as described by Leyse, 1964, Hobson and Rittenhouse, 1972, and very likely, others. Hobson and Rittenhouse present correlations that relate the degree of embrittlement of Zircaloy tubing to the amount of oxide on the surface and the additional dissolved oxygen gradient into the wall.

The NRC does not address the heat transfer characteristics of the oxide or the crud or the combination of the oxide and the crud. The NRC regards the amount of oxide as a measure of the embrittlement of the cladding. That embrittlement could then lead to cladding failure during an RIA power transient. The NRC asserts that crud provides some insulation and leads to slightly higher cladding temperatures that accelerate oxidation, and that since RIL-0401 explicitly accounts for total oxidation, there is no need to account for crud deposits. As the NRC's incomplete analyses reveal, the impact of fouling on the severity of RIAs has been overlooked.

6. THE IMPACT OF FOULING AND OXIDATION ON FUEL CLADDING OPERATING TEMPERATURES

Fouling leads to substantially higher cladding temperatures during normal operation of the nuclear power plant. Fouling also leads to higher power levels during RIAs. The heat transfer characterists of the fouling in the worldwide fleet of today's LWRs have not been openly reported. However, the thermal resistance of fuel element scale deposits at the Experimental Boiling Water Reactor (EBWR) has been documented. The impact of the EBWR deposits on its fuel element dimensional changes has also been recorded. More recently, there have been allusions to boiling chimneys within the fouling of today's LWRs.

6.1 Thermal Resistance and Impact of EBWR Scale

The Experimental Boiling Water Reactor (EBWR) was built and operated at the Argonne National Laboratory (ANL) near Chicago during the late 1950's and early 1960's. The initial power level was 20 megawatts. The operating pressure was 40 atmospheres and the expected surface temperature of the zirconium-clad flat plate nuclear fuel elements was in the range of 255 degrees centigrade over a wide range of heat fluxes. However, plans to operate the EBWR at substantially higher power levels were significantly impacted when significant scale deposits were discovered on the nuclear fuel elements. Scale deposits were most pronounced in the central regions of the reactor core where the maximum heat flux was in the range of 50 W/cm^2. These deposits were mainly aluminum oxide that was exfoliated from allegedly corrosion resistant aluminum alloy structures that were incorporated in peripheral locations of the reactor core. The scale was extremely adherent to the zirconium heat transfer surfaces until the thickness reached the range of 0.013 centimeters, at which point some of the scale flaked off and entered the flow of boiling water

Breden and Leyse, 1960, reported a range of activities. An overall fuel inspection was performed during April,1959. Fuel element ET-51 which operated in a relatively high flux location since startup was examined in the Argonne hot cell. A substantial amount of scale flaked off during the handling. (See Figure 2.) Thickness was about 0.013 cm. Density was 2.5 gm/cm^3 based on weight and volume. The scale was attracted by a magnet. Composition based on wet chemical, spectrographic and X-ray diffraction measurements yielded the following: boehmite, 80.6 %; nickel oxide, 12.6 %; iron oxide, 5.1%; silicon dioxide 1.6%. Thermal conductivity of the flat (planar) scale was 0.008 W/(cm^2)(°C).

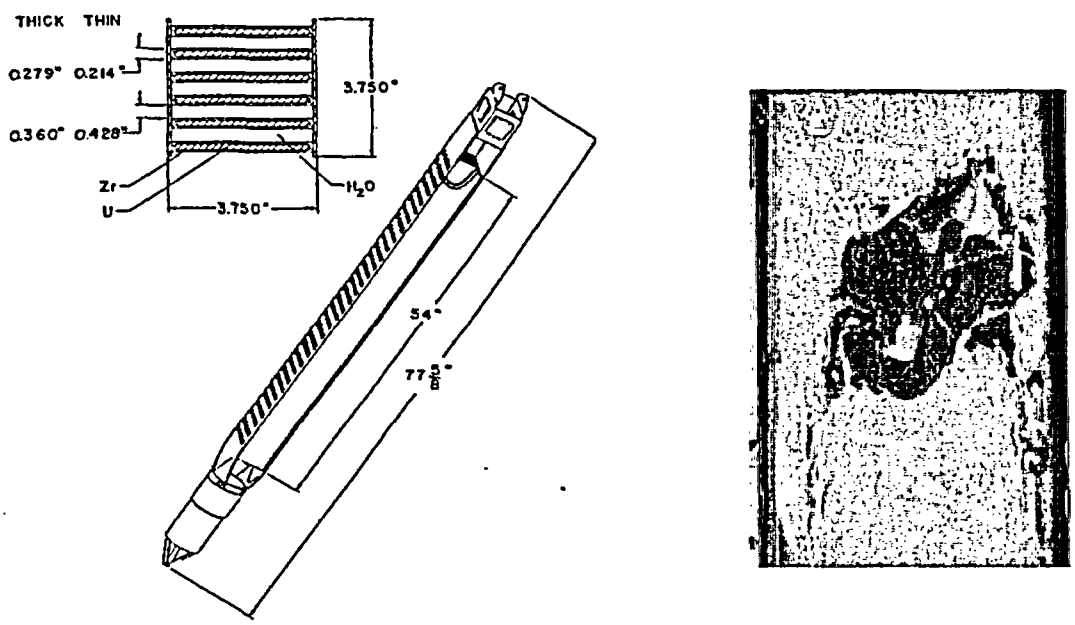

Figure 2. Assembly of the EBWR plate-type fuel element and a hot cell photograph of one section of plate fuel. The scale is peeling away from the zirconium cladding. The scale was very adherent to the cladding until it reached a thickness in the range of 125 microns when peeling began. The zirconium clad enriched uranium metal plate type fuel elements were extremely robust, however, the thick scale led to fuel plate temperatures beyond design. Therefore, the fuel plates expanded longitudinally beyond design limits when the EBWR was operated at elevated power levels for brief times (a few hours). With no fouling of the fuel plates, the operating temperature of the fuel plates in the boiling water system would increase relatively little as heat flux (reactor power) was increased. However, with the extra longitudinal growth of the fouled fuel plates, the side plates were stretched. During inspections of the core, the perforated side plates were then found to be bowed between the assembly spot welds. Clearly, the fouling had no "boiling chimneys" that enhanced heat transfer.

6.2 Boiling Chimneys

At times, there are inferences that crud deposits enhance heat transfer. Mr. Deshon of EPRI referred to "boiling chimneys" during his presentation to the U. S. NRC's ACRS Reactor Fuels Subcommittee, September 30, 2003. On page 132 of the transcript of this meeting, Deshon asserts that these boiling chimneys enhance heat transfer from the cladding to the coolant when the thickness of the fouling is up to a thickness of 20 microns. Next, on page 133, he refers to a flake with a thickness of 125 microns with "... very large voids in the crud, representing these boiling chimneys." Now, it is unlikely that a chimnied layer having a thickness of 20 microns will enhance the heat transfer from the cladding to the cooling water, and it is very unlikely that a porous layer of 125 microns will be anything other than a significant barrier to heat transfer. Deshon presented no experimental data to prove the enhancement of heat transfer.

Now, wick boiling has been discussed by many investigators as a means of improving the performance of heat pipes. In those applications, the fluid is highly pure and the wick geometry is fixed by controlled means (wire mesh structures, specific chemical vapor deposition and perhaps others). However, the crud formations on nuclear power plants will not have the prescribed boiling channels. Even if an optimum boiling chimney array is built into the surface of the cladding, the lifetime of any enhancement would be nil as magnetite and other deposits ruin the system.

6.3 The Mystery of the Fouling at River Bend

Returning to Figure 2.1, note the very heavy fouling of all of the fuel pins. The physical properties of this fouling (density, thermal conductivity, porosity and porosity gradients) have not been reported, however, it is unlikely that this fouling was present while the reactor was operating at design power. Consider the following straightforward analysis. At a modest heat flux of 100 W/cm^2 at full power, a zirconium dioxide thickness of the reported 6 mils (150 microns) at River Bend has a temperature gradient of 700 °C. The water temperature at full power is in the range of 250 °C. That leaves only 250 °C as an allowance for the temperature gradient across the fouling before a 1200 °C cladding temperature is reached. Although the fouling may be a significant barrier to chemical reactions between the cladding and the boiling water, it is unlikely that it would be highly effective for extended time durations. Plainly, it is highly unlikely that River Bend was ever operated at design power levels for extended times with the fuel in the condition reported by King, 2000 and Rusauskas, 2004. (Fuel would have been busting out all over!)

It appears to be more likely that the fuel became highly fouled after the reactor was shut down and the surface heat flux was very low, likely in the range of 1 to a few W/cm^2. According to King, 2000, the fouling was not discovered until 17 days after River Bend was shutdown for its refueling outage number 8. With the very thick fouling, and a period of several days, there was a sufficient time-temperature condition to yield the 6 mil thickness of zirconium dioxide.

Indeed, if the River Bend fouling condition had existed at full power, the fuel element cladding would have been at temperatures high enough to lose strength and then collapse against the fuel pellets. In this case there would have been solid state chemical reactions between the uranium dioxide pellets and the zirconium alloy cladding. In an exploratory investigation, Leyse, 1964, film boiled a short section of a non-irradiated boiling water reactor fuel pin at approximately 1200 °C and 54 atmospheres for about one minute. In addition to a thin oxide layer and a thin oxygen saturated layer at the water interface, there were three distinct reaction layers at the interface of the uranium dioxide and the zirconium alloy: a layer that appeared to be a two phase region of uranium dioxide and zirconium alloy; a layer that is rich in uranium; and a region of oxygen saturated zirconium alloy.

In the absence of a detailed thermal analysis of the fouling and the condition of the highly fouled fuel, the River Bend history remains a mystery. King, 2000, admits, "No previous occurrences were found at other facilities that were similar to the occurrence at the River Bend Station."

7.0 INCOMPLETE TESTING, INCOMPLETE CODES, DEFICIENT REGULATION

Although billions of dollars have been expended on testing and code production, the products are grossly deficient in terms of producing the realistic bases for current regulation of water cooled nuclear power plants. Moreover, there is a dearth of undirected exploratory research that could bear on the technology; see APPENDIX D for an example of exploratory research that has relevance to RIAs.

7.1 Incomplete Testing and Analysis of Test Data

During the last five decades there have been hordes of test programs. Many have been significant and useful, but the preponderance of the work has been incomplete. The Borax experiments of the 1950's were an impressive exploration into the inherent safety light water reactors, but the work was incomplete when the approaches were abandoned. Further Borax-type experiments in the 1960's followed the destructive reactivity insertion accident at SL-1, but again, the work, Special Power Excursion Reactor Tests (SPERT) was abandoned before it was complete. The glaring inadequacy of these reactivity insertion investigations was the total disregard of the significant impact of fouling. The grossly incomplete programs at the Power Burst Facility (PBF) did not include the impact of fouling even though exotic arrays of instrumentation tracked the events in fuel pin destruction.

Fouling has been ignored in the design, conduct, and interpretation of the multitude of heat transfer tests related to emergency core cooling. This was true of the extensive FLECHT and related programs that began during the 1960s and is true of the continuing programs that are funded today. One example (among several) of today's efforts is the Rod Bundle Heat Transfer Testing (RBHT)at Pennsylvania State University. Although millions of dollars are being expended on RBHT, that expenditure is likely insignificant in comparison with the total of other programs in the United States as well as the international community. The very expensive nuclear powered tests in the Loss of Fluid Test (LOFT) were likewise discontinued without any recognition that the fouling that is commonplace in light water power reactors (LWRs) would have a significant impact.

7.2 Incomplete Codes

The common practice is to "calibrate" or otherwise certify computer codes that are employed in reactor safety analyses based on results of testing in programs such as FLECHT, PBF, SPERT, LOFT and a multitude of others. A limited number of tests have also been conducted during the startup phases of commercial nuclear power reactors. Fortunes have been expended on so-called "test cases" and "round robin" exercises. However, none of the codes ranging from the current RELAP, RETRAN, TRACE and countless others have been "calibrated" based on test results with fouled heat transfer surfaces. It could be argued that all of the codes have the capability of modeling a range of heat transfer resistances that could be assigned to fouling. It is a fact that this has not been done, and even if it was attempted, the results would have little credibility.

7.3 Deficient Regulation

Under the banners of "realism" and "conservative realism" there are current moves to produce "risk informed" regulations. Indeed, an opening panel discussion called *"Risk Informing Emergency Core Cooling System (50.46) Requirements"* is scheduled for the USNRC's Regulatory Information Conference, March 2005. It is unlikely that the panel will discuss the deficiencies in the NRC's regulations related to LOCAs. The NRC and the DOE's national laboratory, INEEL, avoid realistic test programs (Rankin, 2003, APPENDIX B). They also avoid realistic code applications (Jacobsen, 2003, APPENDIX C). Initiatives that would derail deficient regulations are summarily rejected.

8.0 SUMMARY AND CHALLENGES

Fouling is ubiquitous. A few of the cases of severe fouling in light water reactors over the past five decades, with power levels have ranging from tens to thousands of megawatts, have been described.

Fouling has a substantial thermal resistance. Fouling leads to increased surface temperature of zirconium alloy cladding and this increases the rate of formation of layers of zirconium oxide. Values of thermal resistance of present day fouling have not been reported. However, at a modest heat flux of 100 W/cm^2 the cladding temperature increases by 115 °C per 25 microns of zirconium dioxide.

Fouling has a greater impact than burnup on reactivity insertion accidents (RIAs). There is an erroneous belief at the USNRC that fouling has only a secondary and minor role in the severity of RIAs. The USNRC is preoccupied with the phenomenon of embrittlement. Even in the absence of cladding embrittlement, the thermal resistance of severe fouling would substantially increase the severity of an RIA. Nevertheless, related initiatives are buried (APPENDIX B).

Fouling has a substantial impact on loss of coolant accidents (LOCAs). With severe fouling, the cladding temperature at the start of the accident will be several hundred degrees higher than is the basis of LWR operating licenses. The added impact of the resulting layer of zirconium dioxide and the associated embrittlement adds to the adverse impact of the severe fouling.

Very clearly, the current fouling of LWR fuel elements must be classified: thermal characteristics, composition, porosity, etc. The characteristics of fouling must be added to the complex codes: RELAP, RETRAN, TRAC, TRACE and others. This will place realism into licensing of LWRs.

REFERENCES

Breden, C. R. and Leyse, R. H., 1960. Water Chemistry and Fuel Element Scale in the EBWR. *Report ANL-6136.* Argonne National Laboratory.

Frattini, P. L., et al., 2001. Axial offset anomaly: coupling PWR primary chemistry with core design. *Nuclear Energy,* **40**, 123 -133.

Hobson, D. O., and Rittenhouse, P. L., 1972. Embrittlement of Zircaloy-Clad Fuel Rods by Steam During LOCA Transients. *Report ORNL 4758.* Oak Ridge National Laboratory.

King, R. J., 2000. Thermally-Induced Accelerated Corrosion of BWR Fuel. *Licensee Event Report 50-458/99-016-00.* Entergy.

Leyse, R. H., 1964. Zircaloy-2 and Type 304 Stainless Steel at 2000°F in Water-Steam for Brief Times. *Report APED-4413.* General Electric Co.

McAdams, W. H. 1942. *Heat Transmission.* Second edn. McGraw-Hill.

Rockwell, T. 2004. On the 50th Anniversary. *Nuclear News*, August 2004, 36-40.

Rusauskas, E. J., and Smith, D. L. 2004. Fuel Failures During Cycle 11 at River Bend. *Proceedings of the 2004 International Meeting on LWR Fuel Performance.* American Nuclear Society.

Schneider, R. J., et al., 2004. Recent GNF BWR Fuel Performance. *Proceedings of the 2004 International Meeting on LWR Fuel Performance.* American Nuclear Society.

Thodani, A. C., 2004. An Assessment of Postulated Reactivity Insertion Accidents for Operating Reactors in the U. S. *Research Information Letter No 401.* United States Nuclear Regulatory Commission.

Varrin, R. D. 2002. United States Patent, US 6,396,892.

APPENDIX A

UNITED STATES
NUCLEAR REGULATORY COMMISSION
WASHINGTON, D.C. 20555-0001

December 13, 2004

Received Dec 17, '4

Mr. Robert H. Leyse
P.O. Box 2850
Sun Valley, ID 83353

Dear Mr. Leyse:

On October 25, 30, and 31, 2004, you sent a series of email messages to Nils J. Diaz, Chairman of the U.S. Nuclear Regulatory Commission (NRC), concerning the role of fouling in postulated reactivity-initiated accidents (RIAs). The purpose of this letter to respond to these emails.

In particular, you made repeated referrence to "Research Information Letter [RIL] 0401, An Assessment of Postulated-Reactivity Initiated Accidents for operating reactors in the U.S.," dated March 31, 2004, which stated that oxidation has a greater impact on RIAs than burnup. You then associate that statement with your own contention regarding cladding-to-water heat transfer, stating that fouling (i.e., crud buildup) has a greater impact than burnup. Although crud deposits would have some secondary effect on RIA behavior, your contention that fouling has a greater impact than burnup would not apply to RIA behavior, as explained in the following paragraphs.

We know that crud buildup, or fouling, increases the thermal resistance of a fuel rod and this, in turn, can accelerate corrosion (i.e., oxidation). Because RIA behavior strongly depends on oxidation, and crud buildup can accelerate oxidation, it is logical that crud buildup could have some effect on RIA behavior. Nonetheless, the test data presented in RIL-0401 included measured oxide thicknesses, and we presented our resulting correlation as a function thereof. In other words, we measured the total oxide thickness and used the resulting measures in our correlation.

Going one level deeper in technical detail, we can draw a further distinction between the effects of oxide and crud. Specifically, the oxidation process releases hydrogen, some of which is absorbed by the zirconium-based cladding alloy, where it embrittles the cladding and could lead to cladding failure during an RIA power transient. By contrast, crud sits on top of the oxide and does not produce any embrittling products that migrate into the cladding metal. Therefore, crud has only a secondary effect, as it provides some insulation and leads to slightly higher cladding temperatures that accelerate oxidation. Nonetheless, the correlation in RIL-0401 explicitly accounts for total oxidation, so crud has no additional effect and there was no need to account for crud deposits in that analysis.

Your third email message also referred to RIL-0401, contrasting it with several references to the first high-burnup fuel test (REP-Na1) in the French Cabri reactor. We believe that this test was affected by the unusual preconditioning of the test specimen, which resulted in hydride redistribution and reorientation, which caused the cladding to be exceptionally brittle and susceptible to failure. We, therefore, disregard that test as discussed in RIL-0401.

R. Leyse -2-

Nonetheless, your email message noted that a recent paper prepared by the Electric Power Research Institute (EPRI) reported that the Cabri team that conducted the REP-Na1 evaluation failed to reach a consensus concerning the validity of that test. The NRC staff and our contractor from Argonne National Laboratory were members of that REP-Na1 review team, and we are intimately familiar with the divided opinions. We also have an extensive basis for our conclusion that the REP-Na1 test was not representative. Moreover, we note that you did not express any concern regarding our conclusion, and the REP-Na1 controversy has no relation to your general concerns about fouling.

I hope that the explanation presented above will satisfactorily resolve your concerns about RIL-0401 and the role of fouling in postulated RIAs.

Sincerely,

Carl J. Paperiello, Director
Office of Nuclear Regulatory Research

APPENDIX B

The following letter shows that only initiatives from NRC or DOE are allowed at INEEL. Note the sentences, "The INEEL has not had any requests from DOE or NRC to perform work on reactor fouling." and, "Because you do not have any funding for the work, we cannot continue to expend effort on this project."

INEEL Idaho National Engineering and Environmental Laboratory

June 25, 2003 CCN 43289

Mr. Robert Leyse, Consultant
P.O. Box 2850
Sun Valley, ID. 83353

INEEL REVIEW AND DETERMINATION OF YOUR PROPOSED COLLABORATION ON "IMPACT OF FOULING OF FUEL ELEMENTS IN NUCLEAR POWER REACTORS ON THE SEVERITY OF REACTIVITY INSERTION ACCIDENTS (RIAS) AND ALSO LOSS OF COOLANT ACCIDENTS (LOCAS)"

Dear Mr. Leyse:

Thank you for your patience as your proposal has been under review here at the INEEL. It was difficult to identify the organization within our Laboratory that was best qualified to review your proposal. You made a request for the INEEL to work with you based on your determination that there is a problem with fouling occurring in nuclear reactor fuel elements. The INEEL has not had any requests from DOE or NRC to perform work on reactor fouling. As you know the use of INEEL facilities and personnel resources must be funded. Because you do not have any funding for the work, we cannot continue to expend effort on this project. If at some time in the future you receive funding and wish to enter into an agreement, we would be happy to continue discussions.

If you have any questions, please feel free to contact me any time at (208) 526-3049 or e-mail me at rra@inel.gov.

Sincerely,

Richard A. Rankin, Manager
Licensing & Technology Development

csf

cc: P. K. Kearns, INEEL, MS 3898
A. M. Pettingill, DOE-ID, MS 1225

P.O. Box 1625 • 2525 North Fremont Ave. • Idaho Falls, Idaho 83415 • (208) 526 0111

APPENDIX C

Following are excerpts from the letter and the attachment that Leyse received from staff at INEEL dated June 17, 2003. As the attachment reveals, the users of SCDAP/RELAP, MELCOR, and MAAP did not consider fouling, "...because it has not been demonstrated conclusively that this effect should be considered." To this day (January 17, 2005) the impact of severe fouling on fuel element temperatures has not been considered in licensing of LWRs. In response to this INEEL letter, Leyse submitted a revised approach and the slide presentation, *"Unmet Challenges for SCDAP/RELAP5-3D: Analysis of Severe Accidents for Light Water Nuclear Reactors with Heavily Fouled Cores,"* may be viewed via GOOGLE, enter Leyse Relap. Of course, the USNRC and the USDOE have continued to spend millions of dollars annually on thermal hydraulic testing and code development. Nevertheless, the impact of severe fouling is overlooked in the wide assortment of international activities.

Idaho National Engineering and Environmental Laboratory

June 17, 2003 CCN 43147

Mr. Robert H. Leyse, CEO
Inz, Inc.
Box 2850
Sun Valley, ID 83353

REVIEW OF PAPER ABSTRACT

Dear Mr. Leyse:

Thank you for submitting your paper abstract, entitled "Deficiencies in Calculations of Core Damage Progression in SCDAP/RELAP5-3D," for the 2003 International RELAP5 Users Seminar. We have reviewed your abstract and find that it is unacceptable without significant revision for the reasons cited in the attachment.

Gary W. Johnsen
RELAP5-3D© Program Manager

Attachment

REVIEW OF ABSTRACT "DEFICIENCIES IN CALCULATIONS OF CORE DAMAGE PROGRESSION IN SCDAP/RELAP5-3D"

First, the author is incorrect about the capabilities of SCDAP/RELAP5-3D©. A proficient user can model the phenomena described in this abstract with SCDAP/RELAP5-3D©, although we are not aware of any user who has modeled crud on fuel elements with SCDAP/RELAP5-3D©.

Second, the author should state what other severe accident analysis codes, such as MELCOR and MAAP, have been applied to consider fuel crud buildup and report results from these analyses. We suspect that none of the other codes have been applied to consider this effect (because it has not been demonstrated conclusively that this effect should be considered). If no severe accident analysis codes have been applied to consider this phenomenon, then the author should revise the emphasis of this abstract (because SCDAP/RELAP5-3D© can be used to consider this effect, it is simply that users have not chosen to consider this phenomena).

APPENDIX D

Microscale Heat Transfer to Pressurized Water at Ultra-High Heat Fluxes

EQUIPMENT AND RESULTS

The experiments used an electrically heated horizontal platinum wire of 7.5 microns diameter that transferred heat to pressurized water at 25 °C. For experiments at constant pressure and varying power, the heat transfer rates during natural convection are much higher than those predicted by correlations currently available. Heat fluxes as high as 41 W/mm^2 (watts per square millimeter) have been obtained in these experiments (Leyse 2001).

Working with pure water at atmospheric pressure, Nukiyama (1935) varied the power to a 140 micron platinum wire heat transfer element and noted a linear increase in the temperature of the element until a certain power was reached at which point the temperature of the element increased relatively little as the applied power was increased substantially. The steep portion of the curve has subsequently been termed nucleate boiling. Nukiyama reached heat fluxes as high as 4 W/mm^2. Leyse employed high pressure apparatus with the 7.5 micron platinum element and produced six plots at constant pressures ranging from 1.38 MPa to 41.37 MPa and reached heat fluxes as high as 41 W/mm^2.

Leyse's results are presented in Figure 1. Heat flux, W/mm^2, is on the ordinate and the temperature of the heat transfer element, °C, is on the abscissa. For reference purposes, the vertical dashed line shows the critical temperature (374 °C).

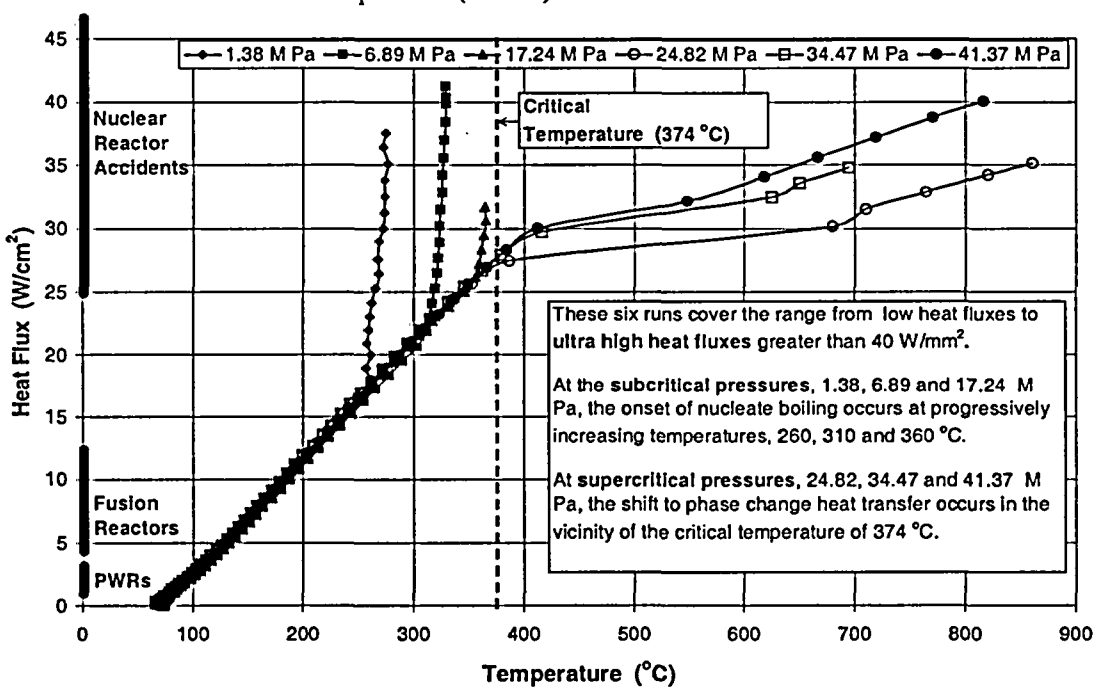

Fig. 1 Microscale heat transfer to pressurized water. Here are plots of six runs at distinct constant pressures ranging from subcritical to supercritical pressures. For perspective, the heat fluxes of current and prospective experience are depicted on the left ordinate. Pressurized water reactors (PWRs) have heat fluxes in the range of 1 to 2 W/mm^2. Fusion reactors have heat fluxes in the range of 4 to 12 W/mm^2. Nuclear reactor accidents (destructive reactivity insertion accidents such as Chernobyl and SL-1) likely include heat fluxes in the range of 30 to greater than 45 W/mm^2 as micron-sized particles are blasted into the surrounding pressurized water.

For the first run at 1.38 MPa, the "Nukiyama knee" occurs at 260 °C and 17 W/mm^2 and the run terminates at 275 °C at a heat flux of 37 W/mm^2. (These are ultra high heat fluxes and it is also surprising that the transitions to nucleate boiling occur at such high levels.) For the second run at 6.89 MPa the knee occurs at 315 °C at a heat flux of 21.5 W/mm^2 and the run terminates at 330 °C at a heat flux of 41 W/cm^2. For the third run at 17.24 MPa, the knee occurs at 355 °C at a heat flux of 26 W/mm^2 and the run terminates at 365 °C at a heat flux of 31.5 W/mm^2.

For the runs at pressures beyond the critical pressure, 22.1 MPa, Leyse has discovered that the temperature of the element increases very substantially as the heat flux increases. This is the reverse of the Nukiyama characteristic.

At 24.82 MPa, the "Leyse knee" occurs very close to the critical temperature of 374 °C at a heat flux of 27 W/mm^2 and the run is terminated at 850 °C at a heat flux of nearly 35 W/cm^2. At 34.47 MPa, the knee occurs at the temperature of 390 °C at a heat flux of 29 W/mm^2. This run terminates at nearly 700 °C at a heat flux of nearly 35 W/mm^2. At 41.37 MPa, the knee occurs at the temperature of 400 °C at a heat flux of 29.5 W/mm^2. This run terminates at 815 °C at a heat flux of 40 W/mm^2.

Returning to the run at 24.82 MPa, note the temperature increase of nearly 300 °C between the first two points beyond the critical temperature. Data are collected at 0.1 second intervals so this is a temperature change of 3000 °C/s. However, this is essentially a steady state measurement in view of the high heat flux and the very low heat capacity of the element.

SIGNIFICANCE

Experts in the field will recognize that this collection of data discloses new territory in the field of phase change heat transfer. The ultra high heat fluxes that have been sustained over the wide pressure range are amazing in themselves. At 7.5 microns, the diameter of the platinum heat transfer element is of the same order of magnitude as the active sites that are cited in much of the literature on boiling heat transfer.

The high heat fluxes that have been attained without burnout of the 7.5 micron heat transfer elements have never been considered in the analysis of severe power excursions during which micron sized particles are blasted into surrounding pressurized water (Chernobyl and SL-1). These results also may be applied to the design of ultra high power pulsed nuclear reactors.

REFERENCES

Leyse, R., 2001, Microscale Heat Transfer to Subcooled Water, 200-6000 Psia, 0-3500 W/cm^2, *Annals of the New York Academy of Sciences, Microgravity Transport Processes in Fluid, Thermal, Biological Sciences II*, 974, 260-273.

Nukiyama, S., 1934, The Maximum and Minimum Values of the Heat Q Transmitted From Metal to Boiling Water Under Atmospheric Pressure, *J. Japan Society of Mechanical Engineers*, 37, 367-374.