Transportation of 30 in. Diameter and Smaller UF_6 Cylinders from East Tennessee Technology Park to the Portsmouth, OH Gaseous Diffusion Plant Site

Attachment 2

ETTP 30" Cylinder Application

Cover Letter

Attachment 1: ETTP 30" Cylinder Application

Attachment 2: ETTP 30B Cylinder Application

Attachment 3: Structural Application

Attachment 4: Criticality Application

Attachment 5: ANSI N14.1 Compliance Matrix ETTP 30" Cylinders

Attachment 6: Transportation Plan

Attachment 7: Proposed Revisions to UX-30 CoC

Attachment 1
ETTP 30" Application

~ 325 cylinders
25-30 are the 30B configuration

Using ETTP 30" transportation plan to be used

Attachment 1: ETTP 30" Cylinder Application

Chapter 1: Introduction

- **description of cylinders; drawings, comparison to ANSI N14.1, status, physical condition, etc.**
- **discussion of contents; UF6 enriched up to 5% in U-235**
- **ETTP 30" cylinder drawing**
- **cylinder/contents weight**

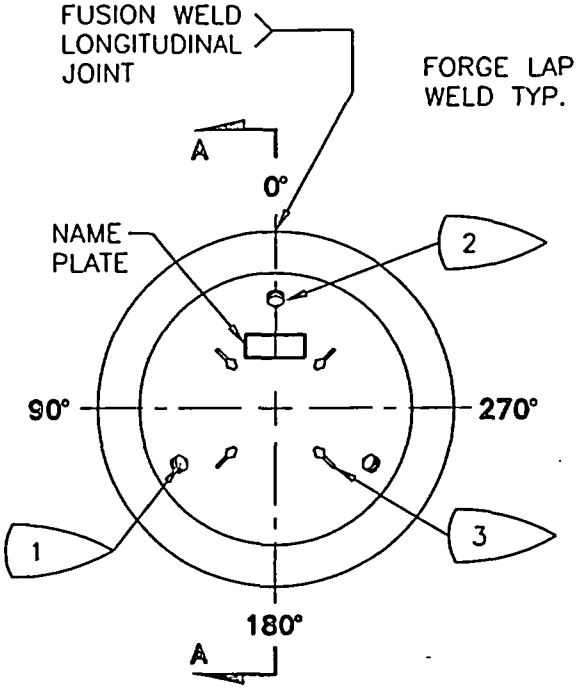

END VIEW

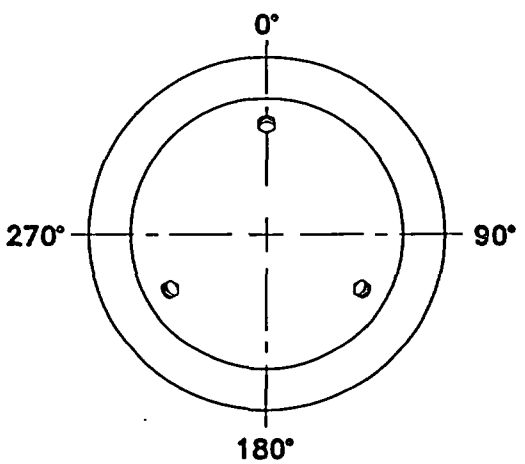

VIEW B–B

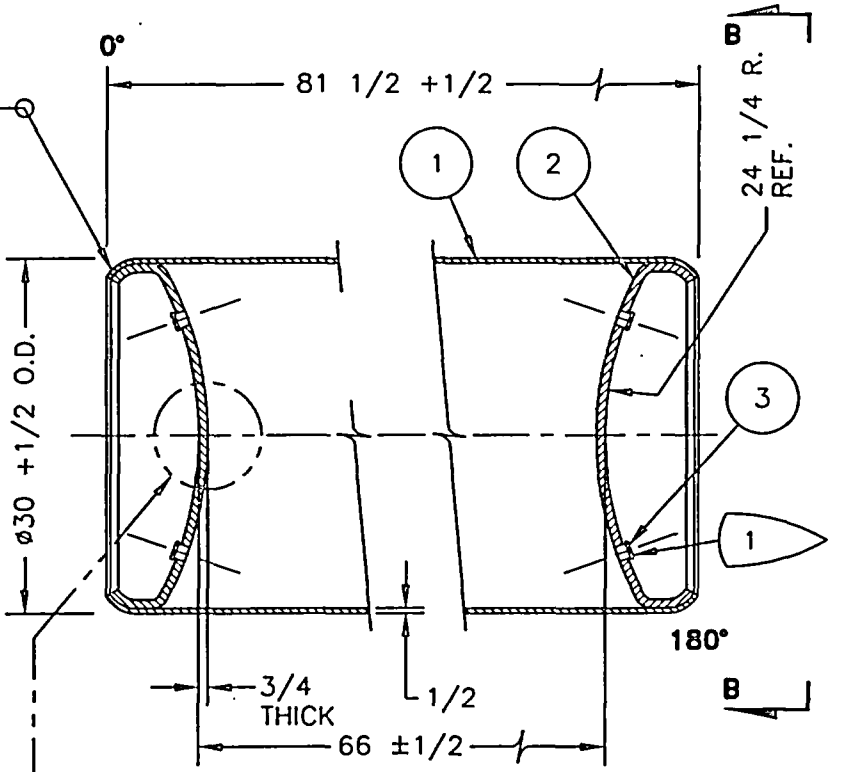

SECTION A–A

PLUG FITTINGS ROTATED AND SHOWN IN PLANE OF VIEW

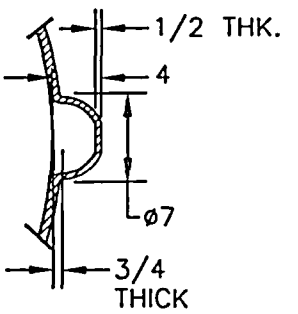

OPTIONAL CONFIGURATION

☐ PROPRIETARY ☒ NON–PROPRIETARY	FSCM No. 54643
TOLERANCES (UNLESS NOTED) HOLE DIA. & LOC. ±1/32 DEC. .X ±.1 DEC. .XX ±.01 DEC. .XXX ±.005 ANGLES ±1° FRACTIONS ±1/16 DOES NOT APPLY TO REFERENCE DIMENSIONS	DO NOT SCALE PRINT DIMENSIONS ARE IN INCHES UNLESS NOTED CAD FILE No. C0670053110030200 REVIEWERS OF ORIGINAL (REV. 0) DRAWN BY CHECKED BY ENGINEER

Duratek™

TYPICAL ETTP
30" UF6 CYLINDER

DRAWING NUMBER	REV.
C–067–005311–003	0

SCALE 1:16	WT. N / A	SHEET 2 OF 2

(1) QUANTITY AND LOCATION OF PLUGS VARIES AMONG CYLINDERS.
SOME STEEL PLUGS ARE WELDED.
PLUG SHAPES VARY (HEX, SQUARE, RING PLUG, PIPE CAP.)
SOME PLUGS ARE MISSING.
SOME PLUGS ARE WELDED IN AND THE HEAD IS GROUND OFF.

(2) PLUGS ARE MADE OF VARIOUS MATERIALS.

(3) SOME CLIPS HAVE BEEN GROUND OR REMOVED.

ITEM	QTY	DESCRIPTION	SPEC. AND / OR PART No.
4	1	1" VALVE (2)	VARIOUS
3	6	1" PLUG (1)	STEEL OR BRASS
2	2	TORISPHERICAL HEAD x 3/4" THICK	ASTM A285 GR. A
1	1	PLATE 1/2" THICK, ROLLED TO ø30" O.D. x 81-1/2" LG.	ASTM A285 GR. A

BILL OF MATERIALS

☐ PROPRIETARY
☒ NON-PROPRIETARY

TOLERANCES (UNLESS NOTED)
HOLE DIA. & LOC. ±1/32 DEC. .X ±.1
DEC. .XX ±.01 DEC. .XXX ±.005
ANGLES ±1° FRACTIONS ±1/16
DOES NOT APPLY TO REFERENCE DIMENSIONS

FSCM No. 54643

DO NOT SCALE PRINT

DIMENSIONS ARE IN INCHES UNLESS NOTED

CAD FILE No. C0670053110030100

REVIEWERS OF ORIGINAL (REV. 0)

DRAWN BY

CHECKED BY

ENGINEER

Duratek™

TYPICAL ETTP
30" UF6 CYLINDER

DRAWING NUMBER C-067-005311-003 REV. 0

SCALE 1:16 WT. N / A SHEET 1 OF 2

Attachment 1: ETTP 30" Cylinder Application

Chapter 2: Structural

- **ETTP 30" Cylinders will be shipped in UX-30 Overpacks**
- **Demonstration of Compliance (10 CFR §71.41) of the package for the HAC Drop Test will be performed by comparison with an NRC approved Type-B Package**
- **Deviation from the ideal conditions will be addressed by analyses**

Attachment 1: ETTP 30" Cylinder Application

Chapter 3: Thermal

No issues.

Chapter 4: Containment

cylinder inspection/maintenance program for leakage protection containment is assured through pre-shipment inspections (Chapter 7)

Guy Wilson to discuss ETTP cylinder inspection/maintenance

Attachment 1: ETTP 30" Cylinder Application

Chapter 5: Shielding

No issues.

Chapter 6: Criticality

CSI = 0

Maximum 75 lbs UF_6 at 1% - 5% enrichment:

Maximum 5020 lbs UF6 for ≤1% enriched

- **maximum cylinder has 54 lbs of 5% enrichment**
- **all cylinders >54 lbs are depleted (except one)**

Attachment 1: ETTP 30" Cylinder Application

Chapter 7: Operating Procedures

Rev. 4 of UX-30 SAR Procedures for Loading the Package (¶ 7.1)		Proposed Revision for ETTP 30" Cylinder
Receipt and filling the 30B or 30C cylinder.	Per plant operating procedures, ANSI N14.1.	Not applicable; not addressed (?).
Cylinder inspection.	Inspection per USEC-651, ANSI N14.1; defective conditions must be corrected.	Same, except acceptance criteria will be modified per Chapter 8.
Overpack Inspection		No change
Procedure for loading 30B or 30C cylinder.	Cylinder filled, tested, and handled with in-plant procedures; follow USEC-651 and ANSI N14.1.	Not applicable; not addressed (?).
Leak Tightness	Shall have been previously verified to sensitivity 10^{-3} cc^3/sec by leak testing of pigtail before disconnection and after closing cylinder valve. (Alternative given.)	Leak tightness verified by ETTP leak inspection/ maintenance procedures.
Cylinder must be weighed	To ensure the maximum permitted weight is not exceeded.	No change.

Rev. 4 of UX-30 SAR Procedures for Loading the Package (¶ 7.1)		Proposed Revision for ETTP 30" Cylinder
Cylinder allowed to cool.	Until below atmospheric pressure.	Not applicable.
Inspect for solid deposits.		Same as ETTP leak inspection procedure.
Tamper indicating seal.		Same?
Procedure for loading overpack.		No change
		No shipments at temperatures below 40° F.
		ETTP 30" cylinders shall be transported using "Transportation Plan" BJC/OR-1841. In addition, cylinders weighing greater than 5000 lbs total must be transported using the extra precautions in Table 7-1 in addition to those in the "Transportation Plan"

Table 7-1

Extra Precautions for Cylinders Weighing Greater Than 5000 lbs (Gross).

Maximum enrichment will be 1%.

Transported on special shipment(s) segregated from rest of cylinder population.

Escorted

Maximum speed of 55 mph

Shipment(s) not to be made if rain is likely.

UF_6 CYLINDER INSPECTION DATA SHEET

CYLINDER NUMBER	CYLINDER MODEL		
300061	☑ 30A (2 ½-ton) ☐ 30B (2 ½-ton) ☐ 48A (10-ton) ☐ 48X (10-ton) ☐ 48T (10-ton) ☐ _____ ☐ 48F (14-ton HW) ☐ 48Y (14-ton HW) ☐ 48G (14-ton LW) ☐ 48H (14-ton LW) ☐ 48OM (14-ton LW) ☐ _____	WATER CAPACITY _____	CYLINDER BEING INSPECTED ☑ PRIOR TO BEING SHIPPED ☐ AFTER BEING RECEIVED
Cylinder Is Code Stamped ☐ YES ☑ NO			
Valve Pressure Inches Hg _____ psia			

CYLINDER IS OVERFILLED: ☐ YES ☐ NO Net weight is _____ pounds: Maximum Fill Limit is _____ ☐ Calculated ☐ Minimum

		CONDITION: Acceptable	Unacceptable	Not Applicable
I. CYLINDER VALVE, VAVLE PORT, AND PLUGS	A. VALVE PORT			
	1. Plugged with UF_6			
	2. Contaminated with Other U-Salts or Foreign Material			
	B. VALVE PROTECTOR			
	1. Present and Properly Positioned			
	2. Sealed			
	THIS SECTION TO BE COMPLETED BY QUALIFIED ANSI INSPECTOR			
	C. VALVE * SQ. HEAD PLUG			
	1. Valve Type NOTE: NO VALVE		✓	
	2. Physical Damage	✓		
	3. Thread Engagement 9 (Threads showing 1)	✓		
	4. Valve Cap – Present and In Place	✓		
	D. PLUGS			
	1. Physical Damage NO PLUG	✓		
	2. Thread Engagement _____ (Threads Showing) _____	✓		
	Description of Damage (if any) NOTED	✓		
II. CYLINDER WELDS	A. CIRCUMFERENTAIL HEAD SEAM WELD – VALVE END			✓
	B. CIRCUMFERENTIAL HEAD SEAM WELD – PLUG END			✓
	C. LONGITUDINAL SEAL WELD			✓
	D. LIFTING LUGS – WELD			✓
	Description of Damage (if any) N/A			✓
III. CYLINDER SHELL AND HEADS	A. SHELL PITTING	✓		
	B. HEAD-VALVE END "	✓		
	C. HEAD-PLUG END "	✓		
	Description of Damage (if any) NOTED	✓		
IV. STIFFENING RINGS	A. VALVE END			✓
	B. CENTER			✓
	C. PLUG END			✓
	Description of Damage (if any) N/A			✓
V. SKIRTS	A. VALVE END PITTING	✓		
	B. PLUG END "	✓		
	Description of Damage (if any) NOTED	✓		

Unacceptable condition.

SECTION A

REMARKS * NOTED: NO VALVE

The above item(s) is ☐ Acceptable ☑ Unacceptable

DATE 1-12-05

QUALIFIED INSPECTOR [signature]

SECTION B

THIS SECTION TO BE COMPLETED WHEN ITEMS ABOVE ARE EVALUATED BY OTHER THAN QUALIFIED ANSI INSPECTOR PERSONNEL

The following items have been evaluated and disposition is:

APPROVED BY | TITLE | DATE

FIGURE 1

Examples of Acceptable and Unacceptable Damage to UF_6 Cylinders

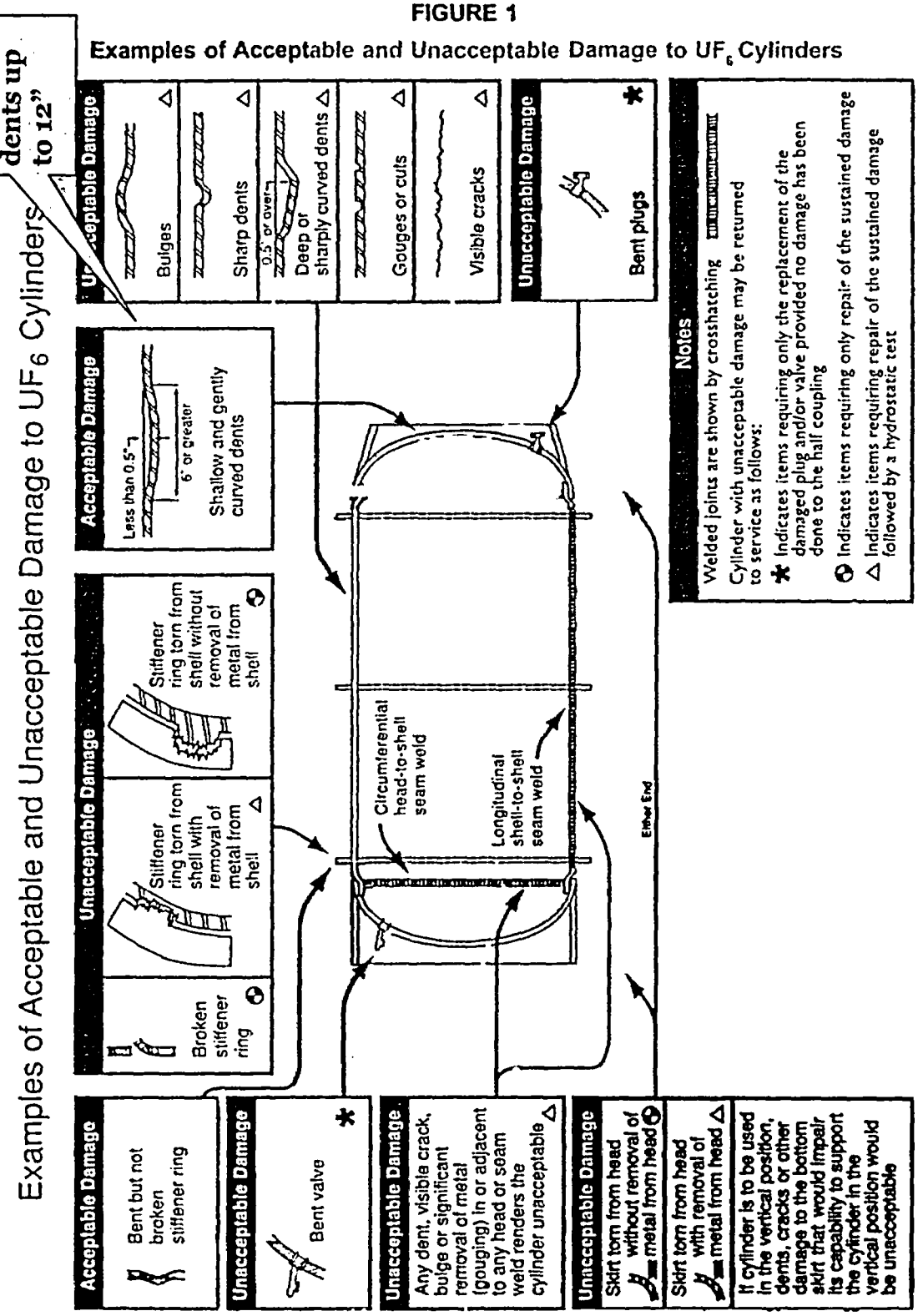

Attachment 1: ETTP 30" Cylinder Application

Chapter 8: Acceptance Tests and Maintenance Program.

Acceptance Tests for 30B Cylinders – Designed and manufactured per ANSI N14.1 (appropriate edition), Uranium Hexafluoride – Packaging for Transport." Acceptance Test for the 30B cylinder shall be in accordance with ANSI N14.1 (appropriate edition).

Acceptance Test for ETTP 30" Cylinders:

Each cylinder shall be visually inspected using a form similar to Figure 2 from USEC-651, Rev. 8. The guidelines in Figure 1 of USEC-651 shall be used to determine acceptable damage to an ETTP 30" cylinder, with the following exceptions and clarifications:

- **Table 8-1 (N14.1 compliance matrix)**
- **The valve(s) on all cylinders shall be replaced by plugs.**
- **The plug(s) on all cylinders shall have between 5-8 thread engagement, unless seal welded closed.**

- **Smooth dents measuring up to 12" in length or width are acceptable.**

- **Corrosion or pitting in cylinder heads or shells that visually appear heavy, deep, or excessive shall be further examined by UT inspection or direct measurement and the following acceptance criteria used:**

  - **Cylinders shall be rejected for transport if any corrosion or pitting spots result in a shell or head wall thickness less than .20".**

  - **If any corrosion or pitting spots are found that result in a wall thickness of .20" – 5/16", ten UT thickness measurements shall be taken in a 1" radius around the spot. If the average wall thickness of these ten measurements is less than .25", the cylinder shall be rejected for transport.**

- **No evidence of leakage in the form of visible yellow deposits of contents material around possible leakage paths shall be present.**

Compliance of ETTP 30 in. cylinders with ANSI 14.1 requirements for 30B cylinders

ANSI N14.1 Criteria	Paragraph	Requirements for 30B Cylinders	Compliance of ETTP 30" Cylinders
Scope & Purpose	1	Packagings currently in service and not designed to ANSI N14.1are acceptable for use, provided they are within their design limitations and are inspected, tested and maintained so as to comply with ANSI N14.1 (Para. 1.1)	See Note 4
Normative References	2	Standards and references contained in ANSI N14.1	N/A
Definitions	3	Definitions of terms used in ANSI N14.1	N/A
Quality Assurance	4	QA program requirements for the licensee-user	The owner of the cylinders and the protective packaging has a QA program that meets the criteria of 10CFR71
Packaging Requirements	5.1 thru 5.4	UF6 packing requirements for various activities	These packaging requirements for the cylinder and overpack will be met.
Std. UF6 Cylinders	5.5	Table 1 lists the standard 30B cylinders data: Nominal Diameter = 30" Material: Steel Min. Volume = 26 ft^3 Tare Weight = 1400 lb Max. Enrichment = 5% Max. Fill = 5020 lb	Table 1 states that the 30B replaces the 30A cylinder. Nominal Diameter = 30" (Note 1a, 1b & 1c) Material: Steel (Note 1a, 1b & 1c) Min. Volume = 25.64 - 25.65 ft^3 (Note 1b & 1c) Tare Weight = 1400 - 1600 lb (Note 1b & 1c) Max. Enrichment < 5% (see Attachment to Exemption Application) Max. Fill = 4800 - 4950 lb (Note 1a, 1b & 1c)
Cylinders	6	Requirements for UF6 cylinders	See below
Design & Fabrication	6.1	General requirements for design & fabrication	See below
General	6.1.1	Design conditions and specified materials for pressure retaining portions of the cylinders shall be adhered to. More than 1 valve or plug are allowed, provided they are installed in accordance with ANSI N14.1	See Note 4 Some cylinders have more than one valve or plug. Most cylinders have valves replaced by plugs. Quantity, location and shape of plugs vary among cylinders. Some plugs are welded and/or ground off. There are no records for these modifications

Reports/Certification/Records	6.1.2	Cylinder owner shall retain Manufacturer Data Report, As Built Dwgs, certifications and radiographs. Manufacturer must measure cylinder water weight and tare weight.	See Note 4
Cleanliness	6.2.1	Cleanliness reqmts for new cylinders	See Note 4
	6.2.2	Cleanliness reqmts for in-service cylinders	See Note 4
Outer Surfaces	6.2.3	Surfaces shall be monitored & cleaned when reqd	See Note 4
Routine Operational Inspections	6.3.1	Routine exam. Of cylinders for leaks, cracks, broken valves or other conditions affecting safety	See Note 4
Periodic Inspections & Tests	6.3.2	Periodic inspection & testing (air leak & hydrostatic test) every 5 yrs. Cylinders with a min. thickness < 5/16" shall no longer be used. Cylinders with leaks, cracks, dents, corrosion, defective valves shall be removed from service.	There are no records for the periodic inspections & tests. UT examination revealed an average thickness of 1/2" for the cylinder shells (note that the 5/16" min. thickness is based on the 30B cylinder which has a design thickness of 1/2", whereas the 30A's is 13/32" - Note 1a, 1b & 1c). All cylinders will be inspected for physical integrity prior to transport by an ASME qualified inspector using ANSI N14.1 inspection criteria. Currently there are 3 cylinders with dents and/or corrosion (see Appendix to the Exemption Application).
Cylinder Maintenance	6.3.3	Cylinder repairs shall conform with ASME Sec. VIII (R-stamped). Repairs shall be followed by hydrostatic test. Valve and plug replacements shall be followed by air leak test.	See Note 4
Reuse of Cylinder Valves	6.3.4	Removed valves can be reused only after refurbishment	See Note 4
Retorque of Valve Nut	6.3.5	Re-torque of valve packing nut to stop leakage is allowed (<100 ft-lb). If more than 100 ft-lb is reqd to stop leakage the valve must be replaced.	See Note 4
1S/2S/5B/8A/12A/12B Cylinders	6.4 thru 6.9	Cylinders outside the scope of this comparison	N/A
30B Cylinder	6.10	Specific reqmts for the 30B cylinder	See below
Design Conditions	6.10.1	DP = 200 psig (internal) DP = 25 psig (external) DT = 250°F Min. Volume = 26 ft^3	DP = 192 - 200 psig (internal) (Note 1a, 1b & 1c) DP = 15 psig (external) (Note 1a) DT = 250°F (Note 1a) Min. Volume = 25.64 - 25.65 ft^3 (Note 1b & 1c)

Fabrication	6.10.2	ASME Sec. VIII & U Stamped. ASME Sec. IX qualified welders & welding procedures. Impact test for welding procedure qualification.	Not U stamped. No fabrication records available.
RT	6.10.3	Spot RT @ longitudinal weld intersection with the head	See Note 4
Testing	6.10.4	Hydrostatic Test @ 400 psig Air Leak @ 100 psig	Hydrostatic Test Pressure: 500 psig (Note 1b & 1c) See Note 4
Materials	6.10.5	Shell & Heads - SA 516, Gr. 55, 60, 65 or 70 Normalized & Charpy impact tested	SA 285 Gr.A (Note 1a & 1c) No records about material heat treatment or impact testing
		Plug - Aluminum Bronze	See Notes 4 & 5
		Valve (see Para. 6.15)	See Para. 6.15
		ASME approved filler metal / ASTM B32 Solder	See Note 4
		Couplings - ASTM A105	No couplings. Valves are threaded directly into the head. See Note 5.
		Valve Protector - ASTM A36	Valve Protectors have been removed from cylinders. See Note 5.
		Nameplate - SA 240, Type 304 or 304L	Almost all cylinders don't have nameplates. For those that have a nameplate, it does not conform to ASME Sec.VIII or to ANSI N14.1 with respect to nameplate information or location.
Valve & Plug Installation	6.10.6	Valve and plug minimum thread engagement and torque requirements. Thread tinning required	Some cylinders do not comply with the min. thread engagement requirement. Thread engagement for some cylinders is not recorded in the inspection sheets. For tinning and torque reqmts see Note 4.
Cylinder Marking	6.10.7	Per ASME Sec. VIII, Div.1 plus tare weight, water capacity and net weight of UF6	See 6.10.5 above (Nameplate)
Cleaning	6.10.8	New cylinder cleanliness and air purging requirements. Cylinders without valves can have the openings sealed by plugs.	See Note 4
Certification	6.10.9	Manufacturer certification required for fabrication, test, cleanliness and water volume plus MTRs for materials.	See Note 4
48X/48Y/48G Cylinders	6.11 - 6.13	Cylinders outside the scope of this comparison	N/A
Cylinder Valve 50 (3/4")	6.14	Requirements for the 5, 8 and 12 in. cylinder valve	N/A
Cylinder Valve 51 (1")	6.15	Requirements for the 30B cylinder valve	See Note 4

Outer Protective Packagings	7	Outer packs requirements	The outer protective packaging will be the UX-30, which is an NRC-approved package, and which will meet these requirements.
Shipping	8	UF6 cylinder shipping requirements	These shipping requirements will be met.

NOTES:

1) Comparison was made based on the following available references:
   1(a) - "UF6 Cylinder Model 30A" drawing CX-761-M2027, Rev.1 (Goodyear Atomic Corp)
   1(b) - "30" Dia UF6 Tank" drawing B-KP-19274b, Rev.3 (Union Carbide Nuclear Company)
   1(c) - "UF6 Cylinder Model 30A" drawing D-P-35721-E, Rev.0 (Union Carbide Corporation)
2) ANSI N14.1 does not cover the 30A cylinders. Therefore, the 30B cylinder requirements were used for comparison (ANSI states in various paragraphs that the 30B is a replacement of the 30A)
3) Appendix C, Table C.1 is the only location in ANSI N14.1 where details are given about the 30A cylinder; these details are about the maximum anticipated activity level in the 30A cylinder
4) There are no records to indicate weather the ETTP 30A cylinders did or did not comply with the requirements of this paragraph
5) A typical ETTP 30" UF6 cylinder is shown in Duratek drawing C-067-005311-003, Rev.0

Maintenance Program for the 30B Cylinders Manufactured per ANSI N14.1 (appropriate edition), "Uranium Hexafluoride – Packaging for Transport". Maintenance of the 30B cylinder shall be performed in accordance with ANSI N14.1 (appropriate edition).

Maintenance Program for ETTP 30" Cylinders.

The ETTP 30" cylinders shall be maintained in accordance with ETTP procedures.

Attachment 2
ETTP 30B Application

Attachment 2: ETTP 30B Cylinder Application

Chapter 1: Introduction

- **description of cylinders; drawings, comparison to ANSI N14.1, status, physical condition, etc.**

  ETTP 30Bs are same as standard 30Bs except for Code stamps.
- **discussion of contents; UF6 enriched up to 5% in U-235**
- **ETTP 30B cylinder drawing (same as ANSI N14.1)**
- **cylinder/contents weight**

Chapter 2: Structural

No issues.

Chapter 3: Thermal

No issues.

Chapter 4: Containment

cylinder inspection program for leakage protection containment is assured through pre-shipment inspections

(Same as ETTP 30")

Attachment 2: ETTP 30B Cylinder Application

Chapter 5: Shielding

No issues.

Chapter 6: Criticality

CSI = 0

Maximum 75 lbs UF6 at 5% enrichment:

(Same as ETTP 30")

Attachment 2: ETTP 30B Cylinder Application

Chapter 7: Operating Procedures

Rev. 4 of UX-30 SAR Procedures for Loading the Package (¶ 7.1)		Proposed Revision for ETTP 30B Cylinder
Receipt and filling the 30B or 30C cylinder.	Per plant operating procedures, ANSI N14.1.	Not applicable; not addressed (?).
Cylinder inspection.	Inspection per USEC-651, ANSI N14.1; defective conditions must be corrected.	Same.
Overpack Inspection		No change
Procedure for loading 30B or 30C cylinder.	Cylinder filled, tested, and handled with in-plant procedures; follow USEC-651 and ANSI N14.1.	Not applicable; not addressed (?).
Leak Tightness	Shall have been previously verified to sensitivity 10^{-3} cc^3/sec by leak testing of pigtail before disconnection and after closing cylinder valve. (Alternative given.)	Leak tightness verified by ETTP leak inspection procedures.
Cylinder must be weighed	To ensure the maximum permitted weight is not exceeded.	No change.
Cylinder allowed to cool.	Until below atmospheric pressure.	Not applicable.

Rev. 4 of UX-30 SAR Procedures for Loading the Package (¶ 7.1)		Proposed Revision for ETTP 30B Cylinder
Inspect for solid deposits.		Same as ETTP leak inspection procedure.
Tamper indicating seal.		Same?
Procedure for loading overpack.		No change
		ETTP 30" cylinders shall be transported using "Transportation Plan" BJC/OR-1841.

Attachment 2: ETTP 30B Cylinder Application

Chapter 8: Acceptance Tests and Maintenance Program.

Acceptance Tests for 30B Cylinders – Designed and manufactured per ANSI N14.1 (appropriate edition), Uranium Hexafluoride – Packaging for Transport." Acceptance Test for the 30B cylinder shall be in accordance with ANSI N14.1 (appropriate edition).

Acceptance Test for ETTP 30B Cylinders:

Designed and manufactured per ANSI N14.1 (appropriate edition), Uranium Hexafluoride – Packaging for Transport." Acceptance Test for the 30B cylinder shall be in accordance with ANSI N14.1 (appropriate edition), with the following exceptions and clarifications:

- **Table 8-1. [ANSI N14.1 compliance matrix.]**

- **No evidence of leakage in the form of visible yellow deposits of contents material around possible leakage paths shall be present.**

Maintenance Program for the 30B Cylinders Manufactured per ANSI N14.1 (appropriate edition), "Uranium Hexafluoride – Packaging for Transport". Maintenance of the 30B cylinder shall be performed in accordance with ANSI N14.1 (appropriate edition).

Maintenance Program for ETTP 30B Cylinders.

The ETTP 30B cylinders shall be maintained in accordance with ETTP procedures .

Attachment 7
Proposed Revisions to UX-30 CoC

Attachment 7: Proposed Revisions to the UX-30 CoC

Para.	Rev. 21	Proposed Revisions	Comments
5(a)(2); 2nd ¶	Two types of 30 inch...	~~Two~~ Four types of 30 inch...	
5(a)(2); 2nd ¶	--	Add the following: or (3) the ETTP 30" cylinders, or (4) the ETTP 30B cylinders.	Not doing a limited set of cylinders.
5(a)(2); new ¶	--	Add the following paragraph: The ETTP 30" and ETTP 30B cylinders are approved for transport in the UX-30 from the East Tennessee Technology Park near Oak Ridge, TN, to the Gaseous Diffusion Plant Environmental Restoration Facility, located near Portsmouth, OH.	
5(b)(1)	UF6 enriched in the U-235 isotope.	The ETTP 30" and ETTP 30B cylinders may also contain UF6 that is normally enriched or depleted in U-235.	
5(b)(2)	ANSI Standard N14.1 30B or 30C cylinder: 5020 pounds UF6...	Add: For ETTP 30", or ETTP 30B cylinder: ▪ 5020 lbs UF_6 if <1% enriched ▪ 75 lbs UF6 if 1%-5% enriched	
5(c)	Criticality Safety Index	Add the following: Minimum criticality safety index for the UX-30 overpack containing an ETTP 30" or ETTP 30B cylinder: 0	

Para.	Rev. 21	Proposed Revisions	Comments
New Para.	--	The ETTP 30" cylinders must conform to Duratek, Inc. drawing C-067-005311-003, Rev. 0.	Note: No reference to "fabricated, inspected, tested, and maintained," as there is now for 30B and 30C cylinders.
New Para.	--	The ETTP 30B cylinders must conform to Fig. _____ in ANSI N14.1-2001.	Note: No reference to fabricated, inspected, tested, and maintained," as there is now for 30B and 30C cylinders.
New Para.	--	The ETTP 30" and ETTP 30B cylinders must be transported in accordance with DOE Transportation Plan BJC/OR-1841, *and each cylinder must only be transported a single time.*	
9(b)	Each packaging must meet the Acceptance Test and Maintenance Program of Chapter 8 of the application, as supplemented.	No change.	
9(c)	The package shall be prepared for shipment and operated in accordance with the Operating Procedure of Chapter 7 of the application, as supplemented.	No change.	
10	The 30-inch diameter cylinders UF6 cylinder valve and plug threads may be tinned with...	This requirement does not apply to the ETTP 30" or ETTP 30B cylinders.	Some of the cylinders pre-date the standards for the materials referenced.
12.	Expiration Date: February 28, 2006	Add: *Approval for the ETTP 30" and 30B cylinders expires December 31, 2006.*	This UX-30 CoC will have timely renewal in January 2006. Apply for renewal with amendment application.

Para.	Rev. 21	Proposed Revisions	Comments
Discussion Item			Is it necessary to address 49CFR173.420 [because of 10CFR71.5]?
Discussion Item			Reference ANSI N14.1 compliance matrix (in Chapter 8).

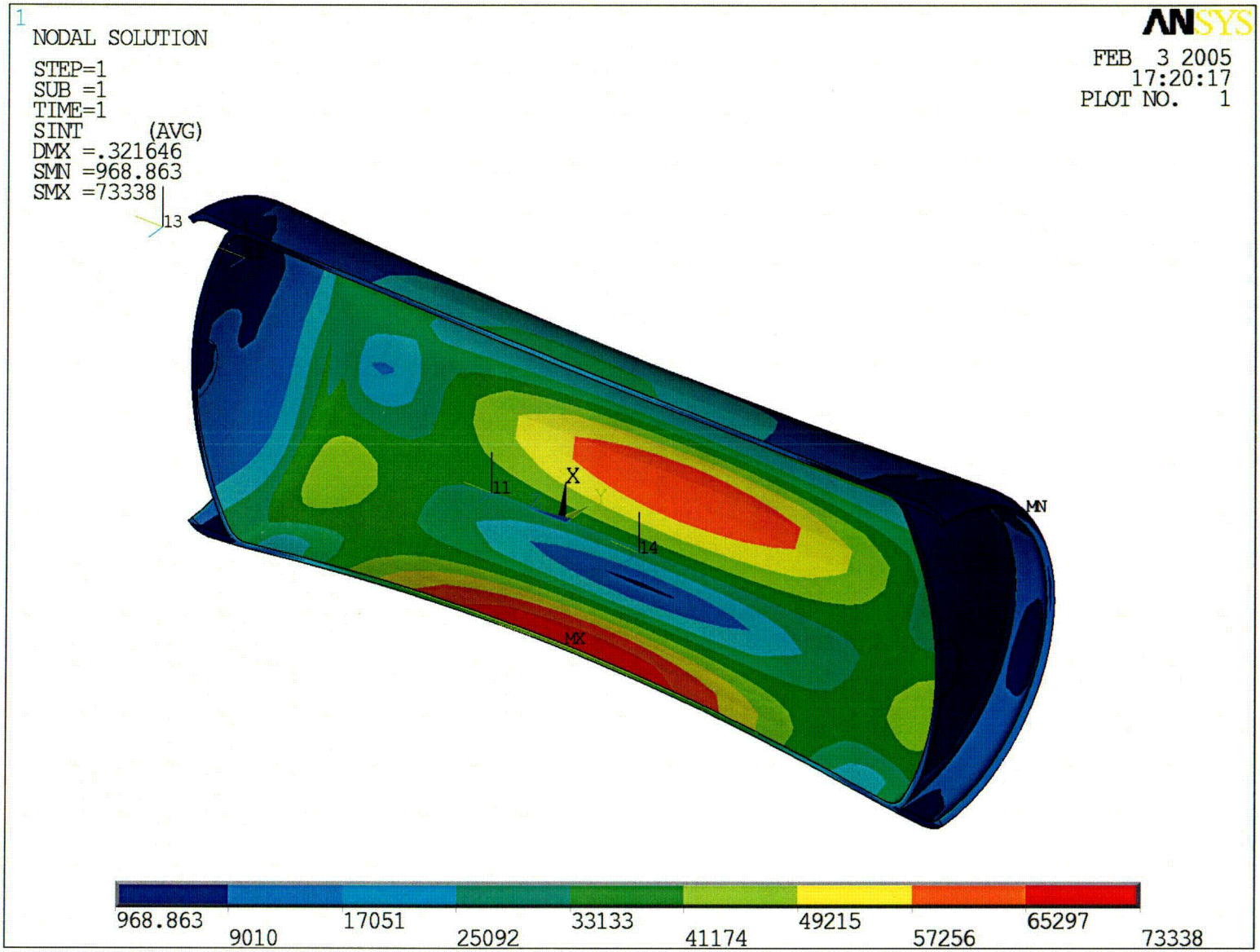
1
NODAL SOLUTION
STEP=1
SUB =1
TIME=1
SINT (AVG)
DMX =.321646
SMN =968.863
SMX =73338
13
11
14
X
Y
MN
MX
ANSYS
FEB 3 2005
17:20:17
PLOT NO. 1
968.863
9010
17051
25092
33133
41174
49215
57256
65297
73338

C01

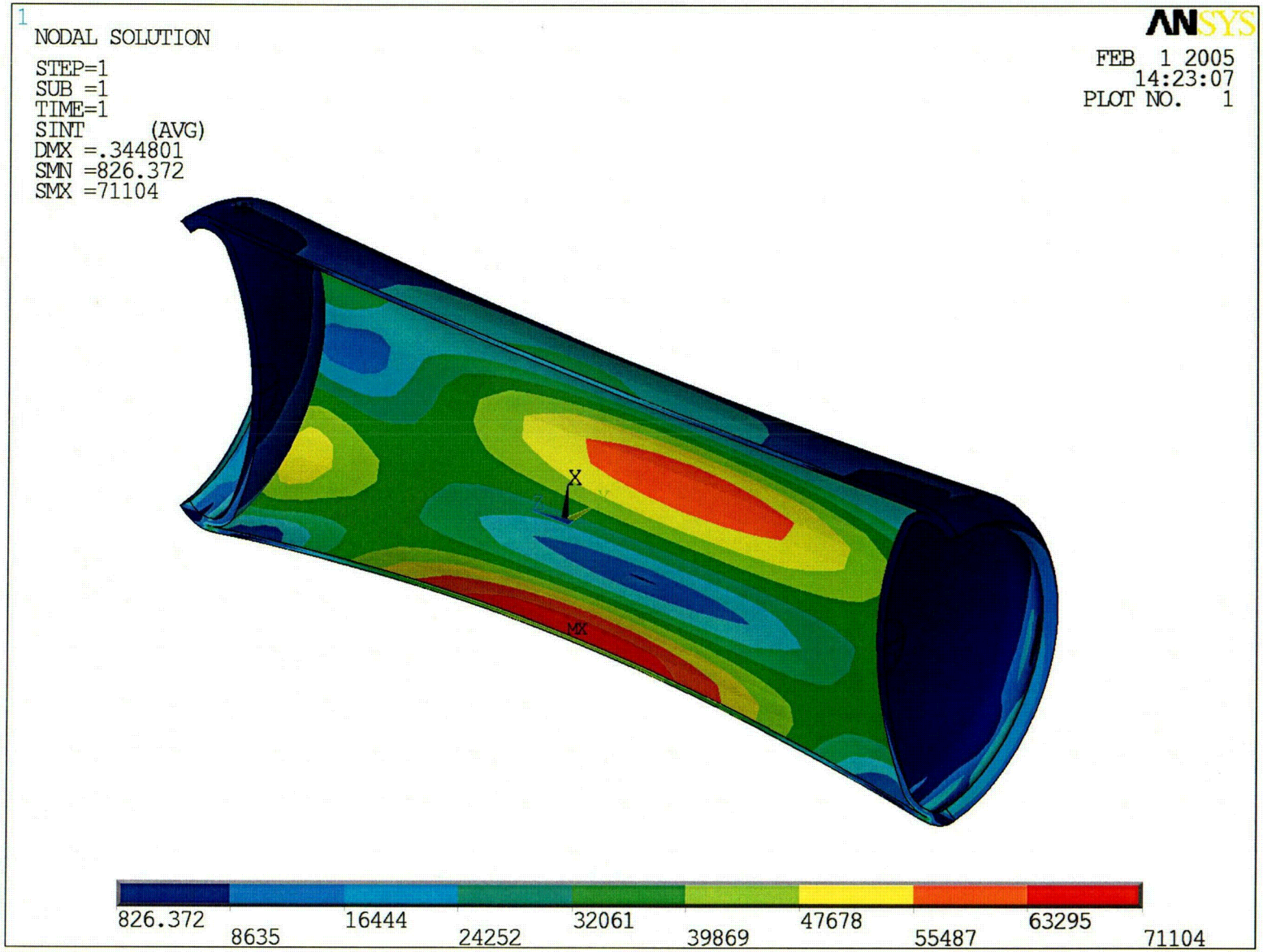
1
NODAL SOLUTION
STEP=1
SUB =1
TIME=1
SINT (AVG)
DMX =.344801
SMN =826.372
SMX =71104
ANSYS
FEB 1 2005
14:23:07
PLOT NO. 1
MX
826.372
8635
16444
24252
32061
39869
47678
55487
63295
71104

C02

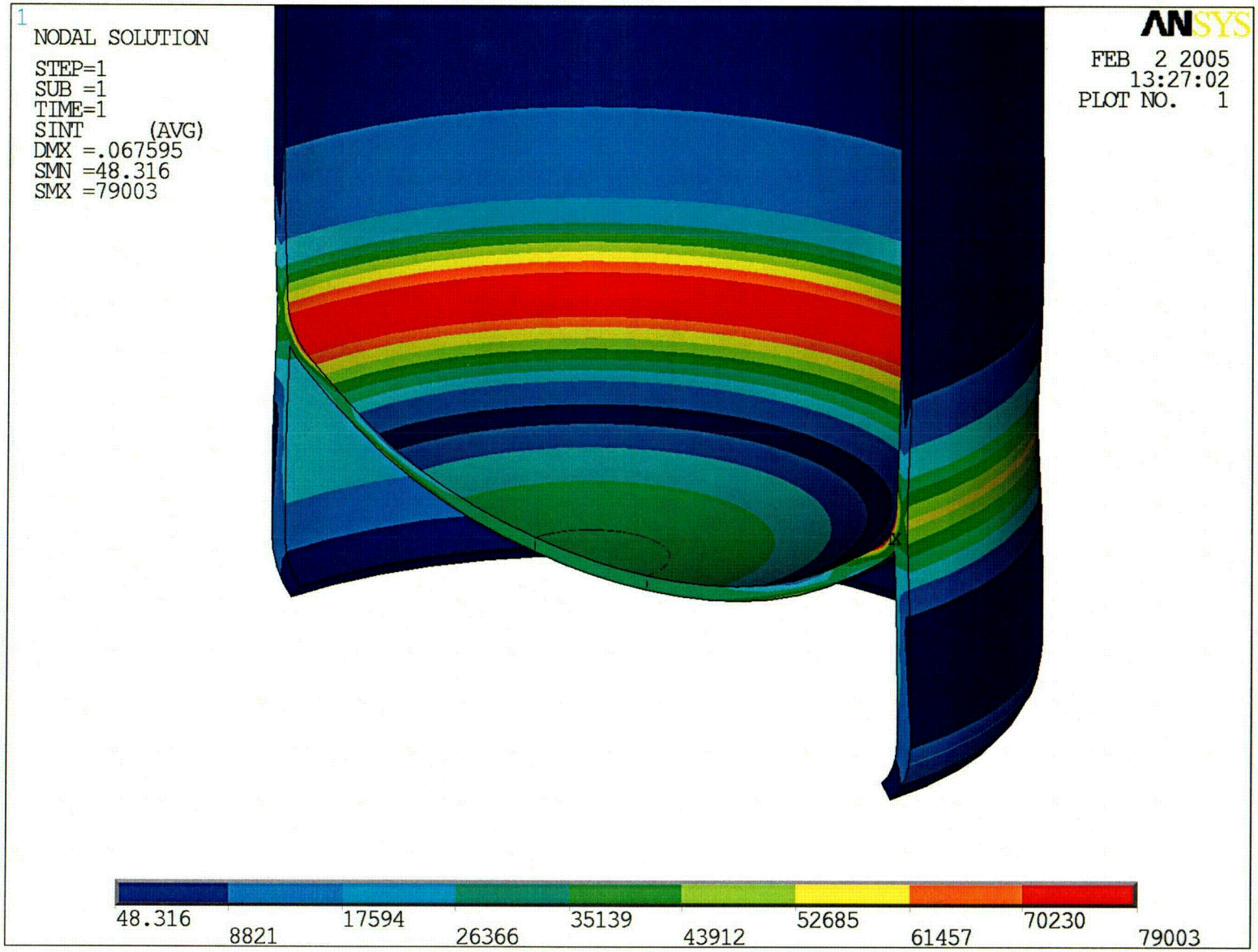
1
NODAL SOLUTION
STEP=1
SUB =1
TIME=1
SINT (AVG)
DMX =.067595
SMN =48.316
SMX =79003
ANSYS
FEB 2 2005
13:27:02
PLOT NO. 1
48.316
8821
17594
26366
35139
43912
52685
61457
70230
79003

C03

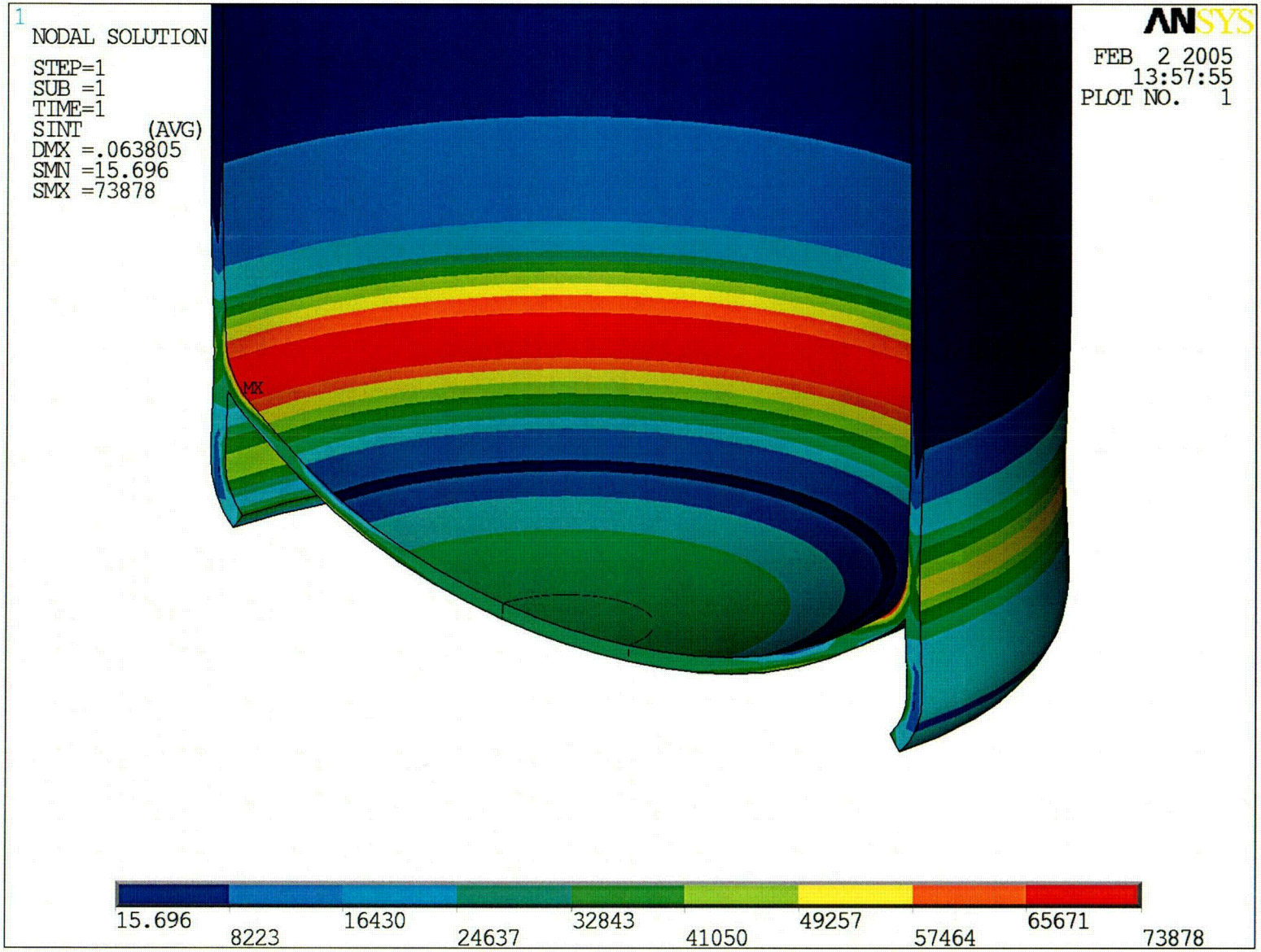
1
NODAL SOLUTION
STEP=1
SUB =1
TIME=1
SINT (AVG)
DMX =.063805
SMN =15.696
SMX =73878
ANSYS
FEB 2 2005
13:57:55
PLOT NO. 1
MX
15.696
8223
16430
24637
32843
41050
49257
57464
65671
73878

COL

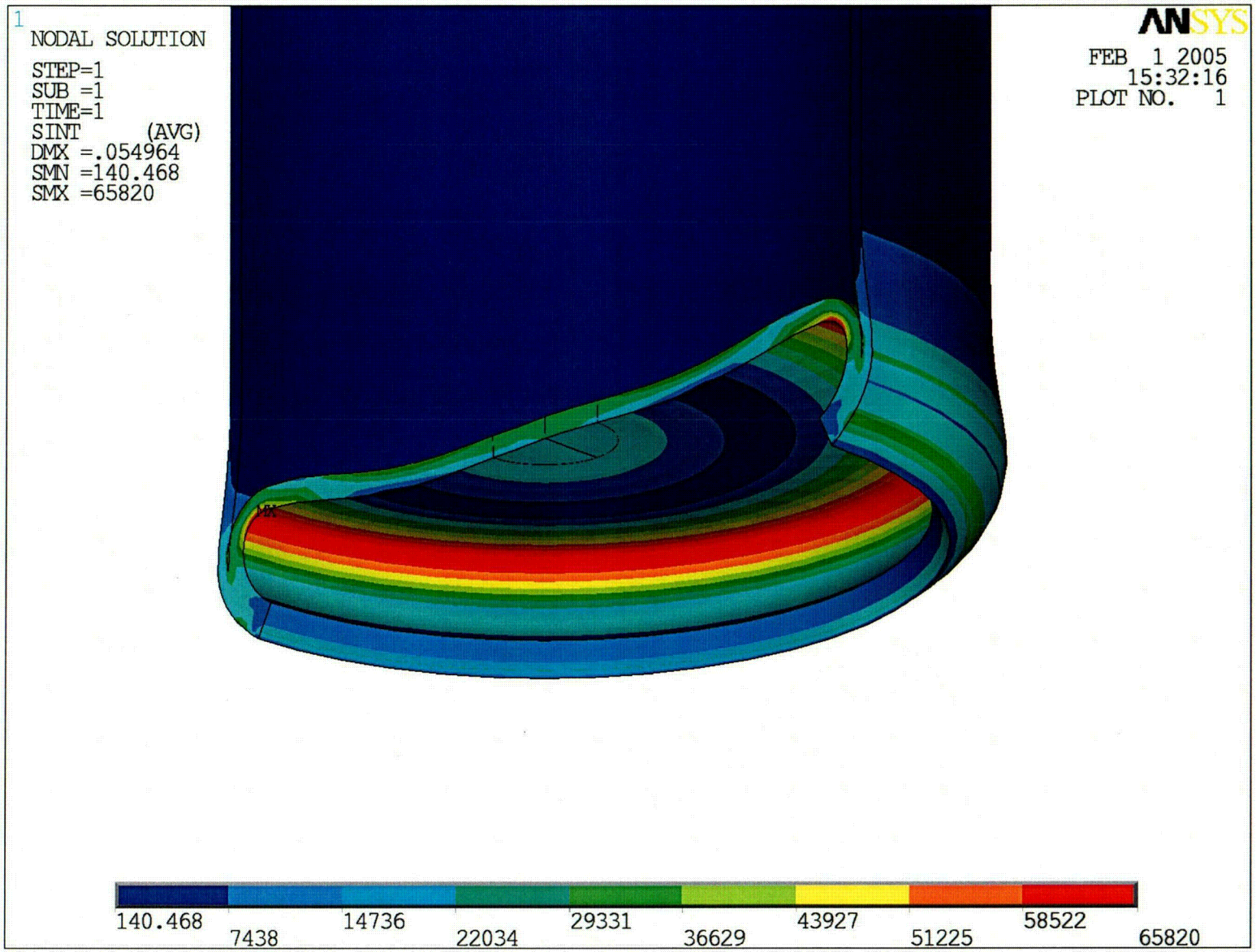
1
NODAL SOLUTION
STEP=1
SUB =1
TIME=1
SINT (AVG)
DMX =.054964
SMN =140.468
SMX =65820
ANSYS
FEB 1 2005
15:32:16
PLOT NO. 1
140.468
7438
14736
22034
29331
36629
43927
51225
58522
65820

C05

C06

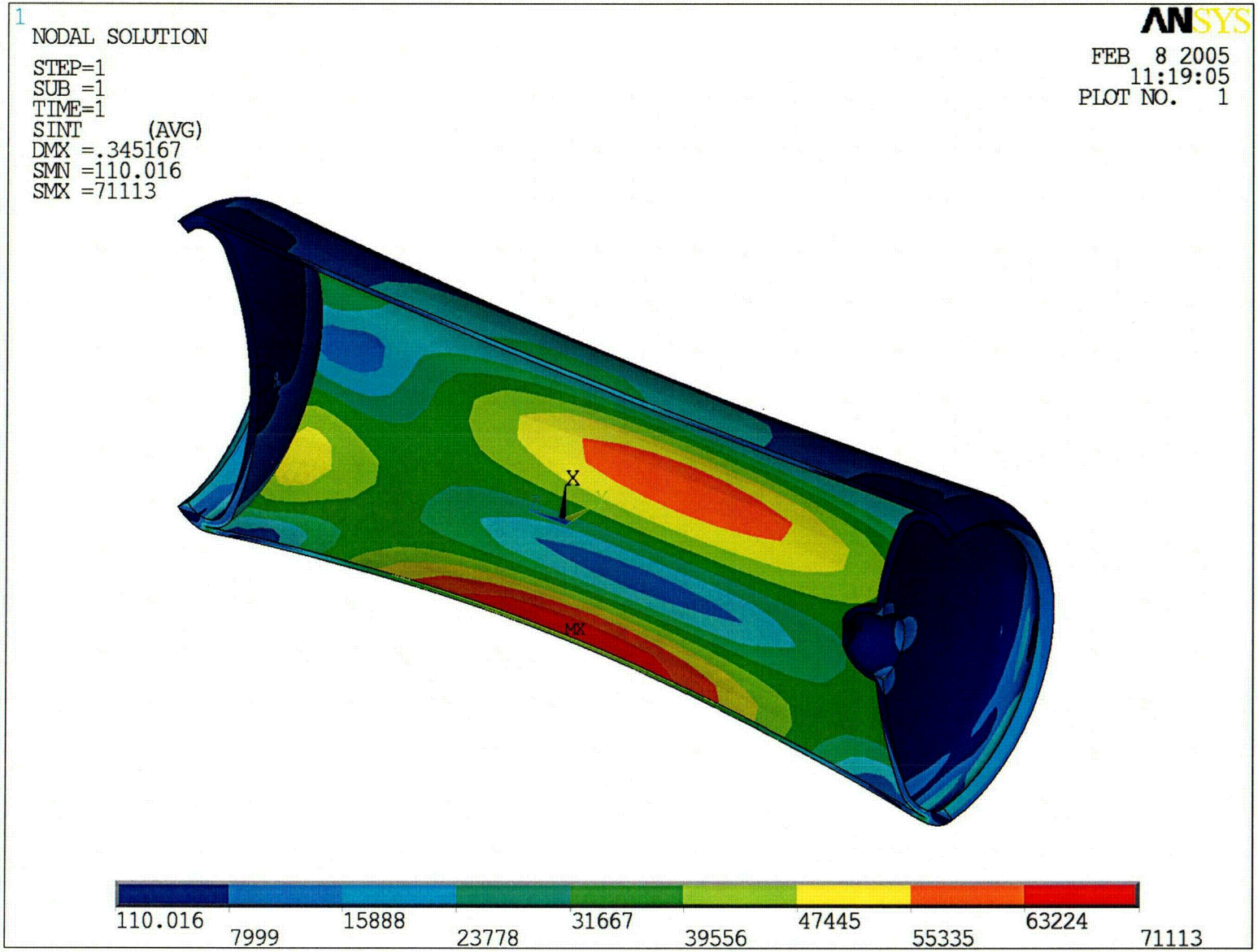
1
NODAL SOLUTION
STEP=1
SUB =1
TIME=1
SINT (AVG)
DMX =.345167
SMN =110.016
SMX =71113
ANSYS
FEB 8 2005
11:19:05
PLOT NO. 1
Y
X
Z
MX
110.016
7999
15888
23778
31667
39556
47445
55335
63224
71113

C07

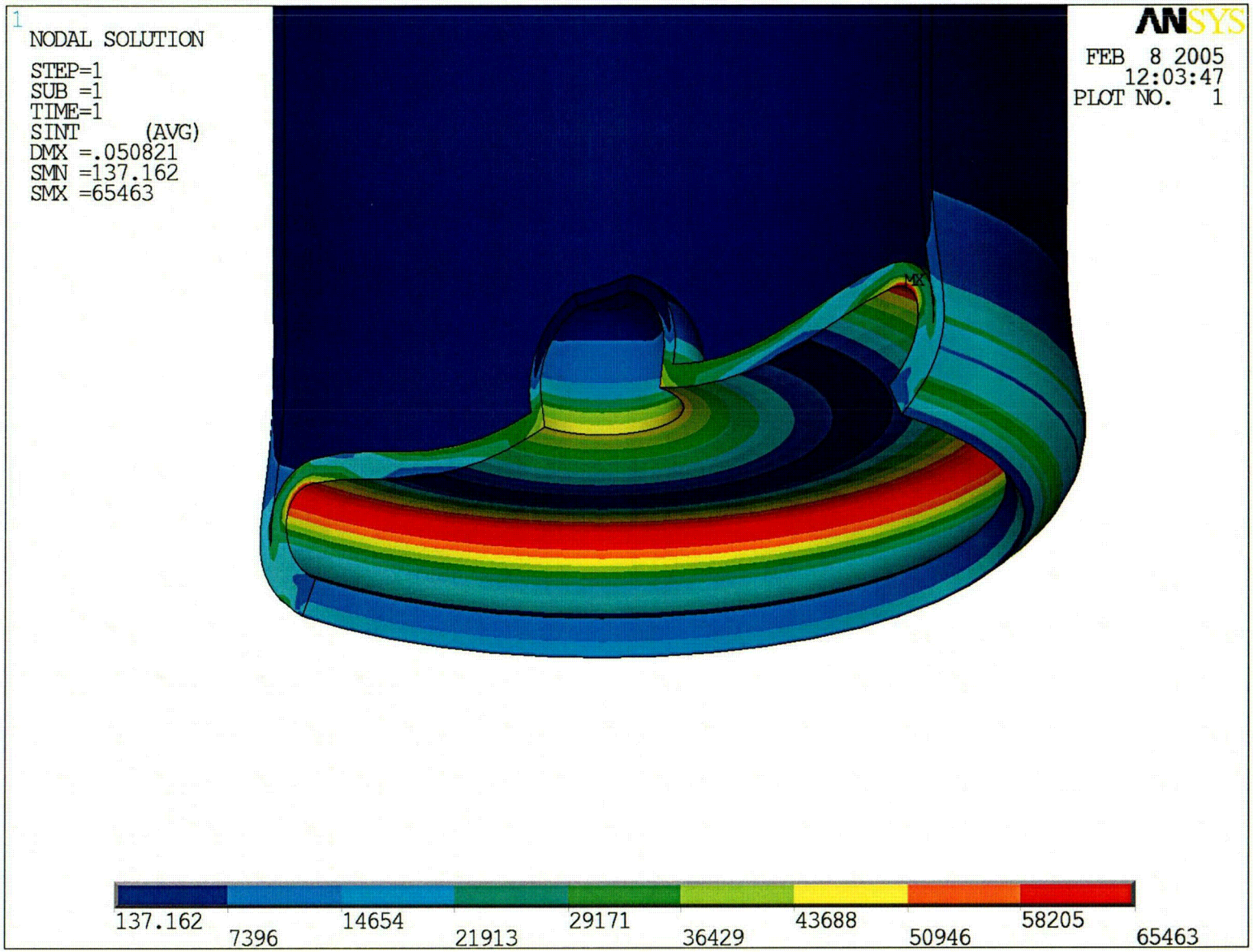
1
NODAL SOLUTION
STEP=1
SUB =1
TIME=1
SINT (AVG)
DMX =.050821
SMN =137.162
SMX =65463
ANSYS
FEB 8 2005
12:03:47
PLOT NO. 1
MX
137.162
7396
14654
21913
29171
36429
43688
50946
58205
65463

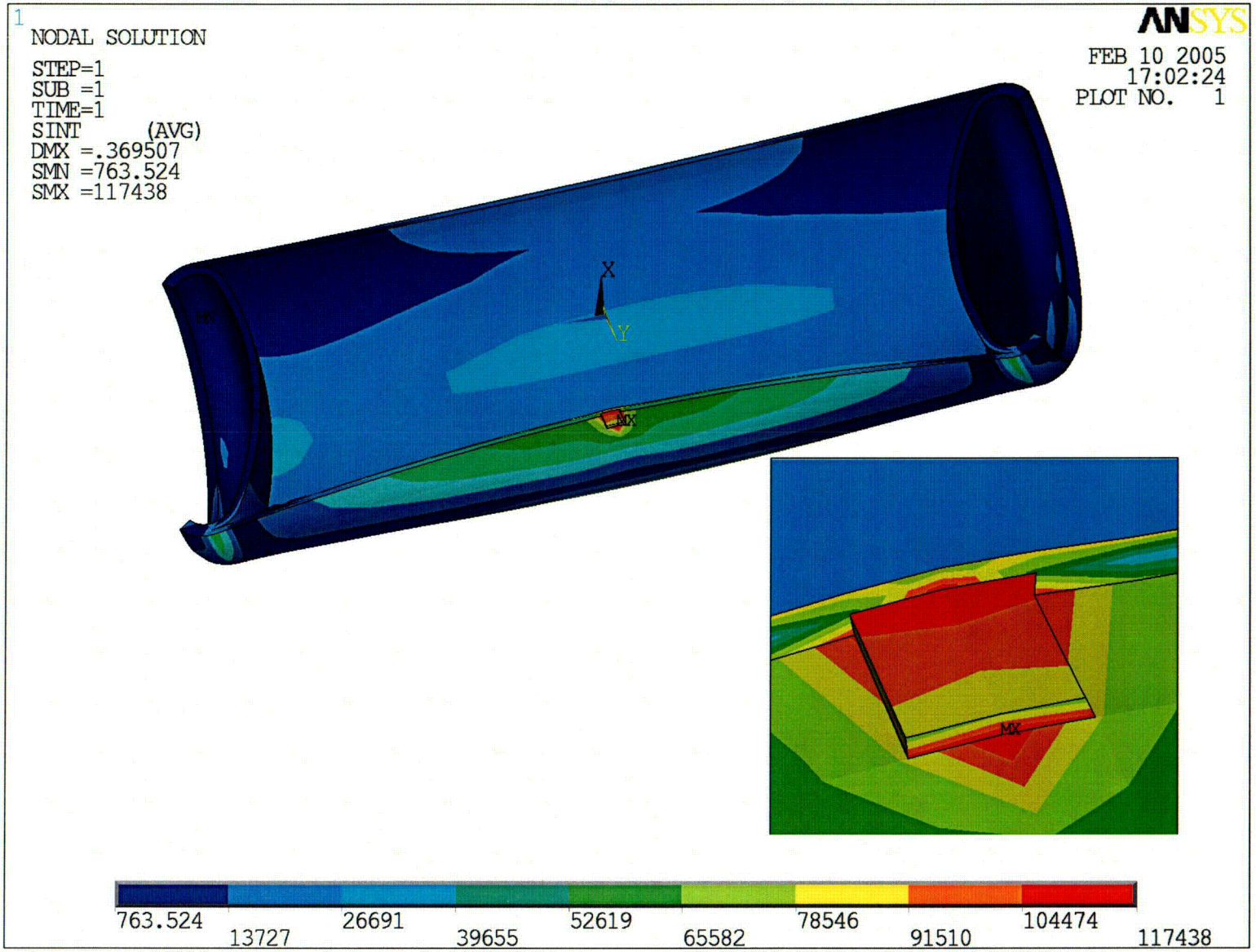
1
NODAL SOLUTION
STEP=1
SUB =1
TIME=1
SINT (AVG)
DMX =.369507
SMN =763.524
SMX =117438
ANSYS
FEB 10 2005
17:02:24
PLOT NO. 1
X
Y
MX
MX
763.524
13727
26691
39655
52619
65582
78546
91510
104474
117438

C09

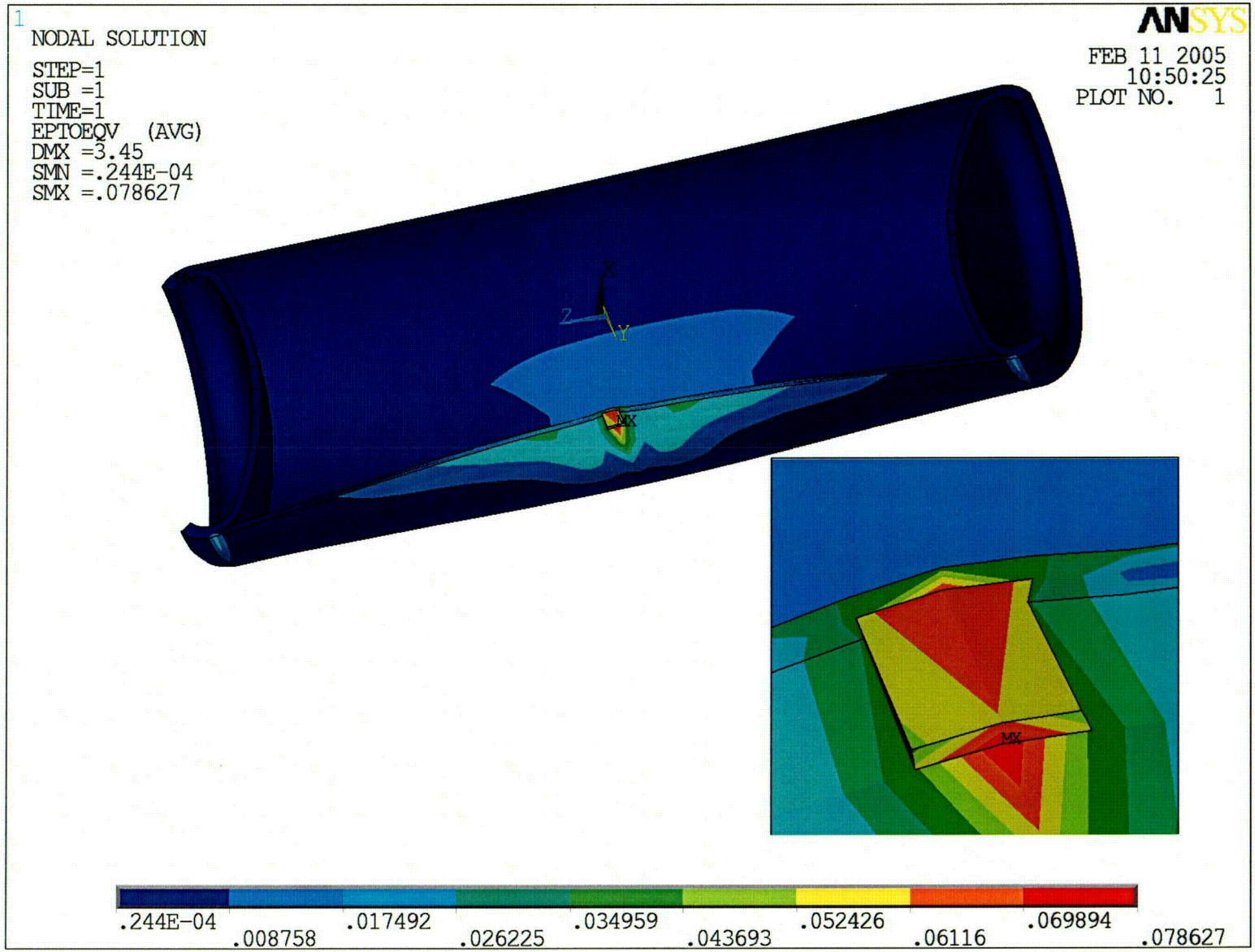
1
NODAL SOLUTION
STEP=1
SUB =1
TIME=1
EPTOEQV (AVG)
DMX =3.45
SMN =.244E-04
SMX =.078627
ANSYS
FEB 11 2005
10:50:25
PLOT NO. 1
MX
MX
.244E-04
.008758
.017492
.026225
.034959
.043693
.052426
.06116
.069894
.078627

1

NODAL SOLUTION

STEP=1
SUB =1
FACT=85.548
SINT (AVG)
DMX =.945209
SMN =309.218
SMX =.143E+07

PRES-NORM
1000

ANSYS

FEB 16 2005
15:26:09
PLOT NO. 1

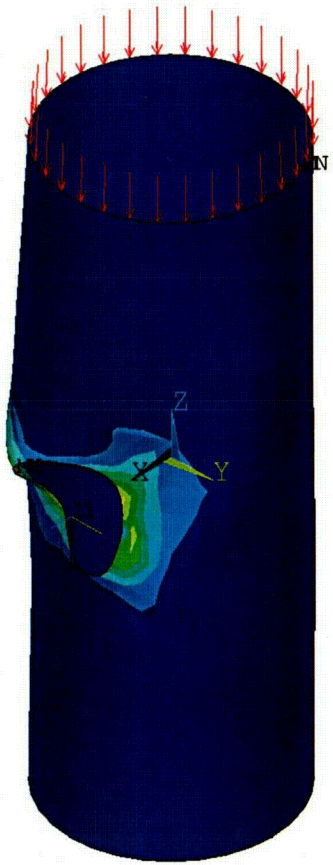

$\sigma_{critical}$ = 85.548x1,000/0.5

= 171,096 psi

>> S_y = 24,000 psi

Cylinder Inspections

- Cylinders have been inspected in accordance with a DOE-site In-Storage inspection program.
- In-storage inspections are performed annually or quadrennial based on cylinder body or valve conditions (annual for cylinders with heavy scale or rust, improper stacking, or evidence of contamination).
- These cylinders have not been in use for UF_6 transfer or transport within the past 5 years and so ANSI N14.1 requires inspection prior to transport.

DOE Site In-Storage Cylinder Inspection Program

- Trained inspectors (not NBIC-certified).
- UT measurements taken on selected subpopulations defined by a statistical corrosion study updated annually (usually about 100 cylinders per year from 48" thinwall populations prone to corrosion).
- Leak detection by visual examination.

Leak Detection at Valves and Plugs

- Evidence of contamination : stain/deposit
- Check with rad meter
- Decon area
- Bag valve
- Check after each 30 days for 90 days
- If visual stain is authentic leak, replace valve and decon area again

Inspections at ETTP prior to Transport to Portsmouth

- Pre-move before downstacking (same as In-Storage Inspection).
- ANSI Inspection (by NBIC-certified Inspector).
- Radcon inspection (swipes at plug, valve and 3 locations on the cylinder body).
- Post relocation at or on trailer. (same as In-Storage Inspection).
- Transportation dose rate survey.

ETTP Inspection Program Provides Equivalent Safety to ANSI N14.1

- Although the ETTP Inspections do not meet the letter of ANSI N14.1 for "in use" cylinders in that they were not pressure tested in the past 5 years, the ETTP Inspections provide equivalent safety, and meet the requirements for "Routine Operational Inspections" in ANSI. Pressure tests of nonempty cylinders are not practical.
  - Under ANSI N14.1 a cylinder can be pressure tested, visually inspected, and then filled and shipped up to 5 years later.
  - The ETTP cylinders receive several inspections that would detect UF_6 leakage during the same time, including an ANSI N14.1 visual inspection (and UT if advised) immediately prior to shipping.

(EXAMPLE ONLY)

DOE 30-Inch Diameter UF_6 Cylinder Inspection Checksheet

1. Site: ETTP____ Paducah ____ Portsmouth ____ 4. Inspected by: _____ (Badge & Initials) Date: _____

2. Type: Pre-relocation ___ Post-relocation ___ In-storage ___ Inspected by: _____ (Badge & Initials) Date: _____

3. Location: Y____ S____ R____ P____ T/M/B ___ 5. Cylinder Serial # _____

6. Type/Model No.: 30 ___ 7. Nameplate Data: WATER CAP ___ LB: TARE WT. ___ LB.

8. Valve Data: Manufacturer _____ Size _____

(A)	DEFECT	(B)	(C) SIZE/COMMENT	(A)	DEFECT	(B)	(C) SIZE/COMMENT
Mechanical Integrity				**Cylinder Body**			
A01	Hole In Cylinder/ Evidence of Visible Leakage/ Contamination/Reaction Products		Length: Width: Leakage: On Ground On Cylinder Color/description:	B01	Cylinder Shell Body in Ground Contact		Depth: Section: Valve end head Plug end head Body
A03	Bulge 1/2" or More		Height: Length: Width:	B03	Cylinder in Standing Water or Evidence of Water/Cylinder Contact		
A04	Gouge or Cut Over 1/16" Deep		Depth: Length: Width:	B06	Improper Upper Tier Cylinder Support		Missing Spacers Deteriorated Spacers
A05	Dent Over 1/16" Deep		Depth: Length: Width:	B07	Wood Saddle/Resting Block In Use		Cracking Splitting Rotting Sinking
A09	Severe Pitting Corrosion		Length: Width: Evident on 1/3 or More of the Bottom	B08	Concrete Saddle Defective		Cracking Chipping Sinking Corrosion
A10	Heavy Rust Scale on Cylinder Over 1/8" Thick and Over 2" in Diameter		Length: Width: Evident on 1/3 or More of the Bottom	B09	Saddle Missing		
A11	Stacking of Incompatible Cylinders			B10	Debris Between Saddle and Cylinder		
A13	Crack in Cylinder Wall		Depth: Length: Width:	B11	Rust Bloom on Painted Cylinder		Length: Width:
				B12	Coating System Failure		
				B13	Complete Coating System Failure		
				B15	Concrete Spacer Defective		Cracking Chipping Corrosion

(EXAMPLE ONLY)

(A) DEFECT		(B)	(C) SIZE/COMMENT	(A) DEFECT		(B)	(C) SIZE/COMMENT
Valve End of Cylinder				**Plug End of Cylinder**			
C01	Evidence of Leakage/ Contamination on Valve			D01	Evidence of Leakage/ Contamination on Plug		
C02	Bent Valve Body			D02	Missing or Bent or Damaged Plug		
C03	Bent or Separated Skirt			D03	Bent or Separated Skirt		
C04	Rust/Scale in Skirt or Weep Hole in Skirt is Plugged		Depth: Weep Hole Plugged	D04	Rust/Scale in Skirt or Weep Hole in Skirt is Plugged		Depth: Weep Hole Plugged
C05	Skirt in Ground Contact			D05	Skirt in Ground Contact		
C06	Weep Hole in Skirt Nonexistent or Misaligned		Nonexistent Misaligned	D06	Weep Hole in Skirt Nonexistent or Misaligned		Nonexistent Misaligned
C08	Valve End Not Accessible			D08	Plug End Not Accessible		
C10	Packing Nut Missing or Cracked			D10	Rusted Plug		
C12	Port Cap Missing or Cracked			D11	Plug Sealed or Welded		
C13	Valve Stem Defective		Twisted Sheared Bent Other:				
C14	Plug in Place of Valve						
C15	Valve Protector Cracked, Bent, or Weld Cracked		Protector Cracked Protector Bent Weld Cracked				
C16	ID Plate Missing/Off/ Illegible						
C17	Id Plate Loose/Cracked Weld						
C21	Nonstandard Valve						
C24	Cracked Valve Body						

5. Cylinder Serial #_____

(EXAMPLE ONLY)

(A) DEFECT		(B)	(C) SIZE/COMMENT	(A) DEFECT		(B)	(C) SIZE/COMMENT
UF_6 Cylinder Maintenance Codes							
M01	Damage Control Patch (soft-patch) Applied			M11	Cyl. Plug Retorq/Replaced		
M02	Permanent Welded Patch Applied			M12	Stem Tightened		
M03	Cylinder Painted			M13	ID Plate Replaced		
MC4	Contaminated Valve Bagged		Alpha: Beta:	M14	ID Plate Reattached		
MD4	Contaminated Plug Covered		Alpha: Beta:	M15	ID Tag Installed		
MC5	Valve Determined to be Uncontaminated			M16	Coating System Maintenance		
MD5	Plug Determined to be Uncontaminated			M17	Valve End Skirt Painted		
MC6	Valve End Skirt Cleaned			M19	30" Cylinder Spacers Replaced/Installed		
MD6	Plug End Skirt Cleaned			M20	Plug End Skirt Painted		
M07	Valve Replaced						
M08	Pack. Nut Retorq/Replaced						
M09	Port Cap Retorq/Replaced						

5. Cylinder Serial #_____

__ Check if you have evaluated all the inspection criteria on this form.

ETTP UF6 CYLINDERS DISPOSITION PROJECT

Proposed Transportation Method for Cylinders Under 30 in. Diameter

High Density Foam Mold allows even
Load distribution on the vessel walls

Low Density Foam allows
various packing combinations

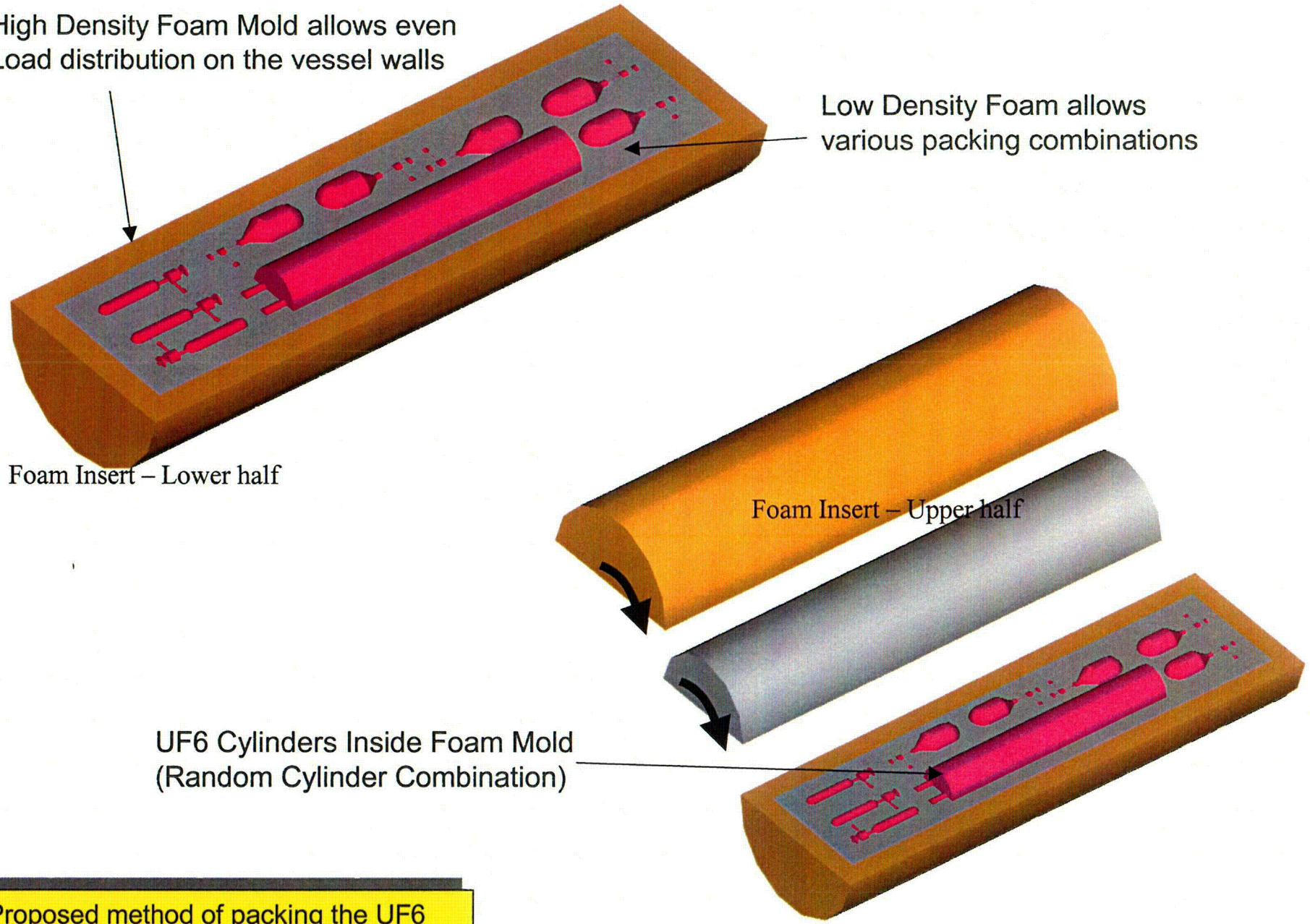

Proposed method of packing the UF6 cylinders inside the foam insert

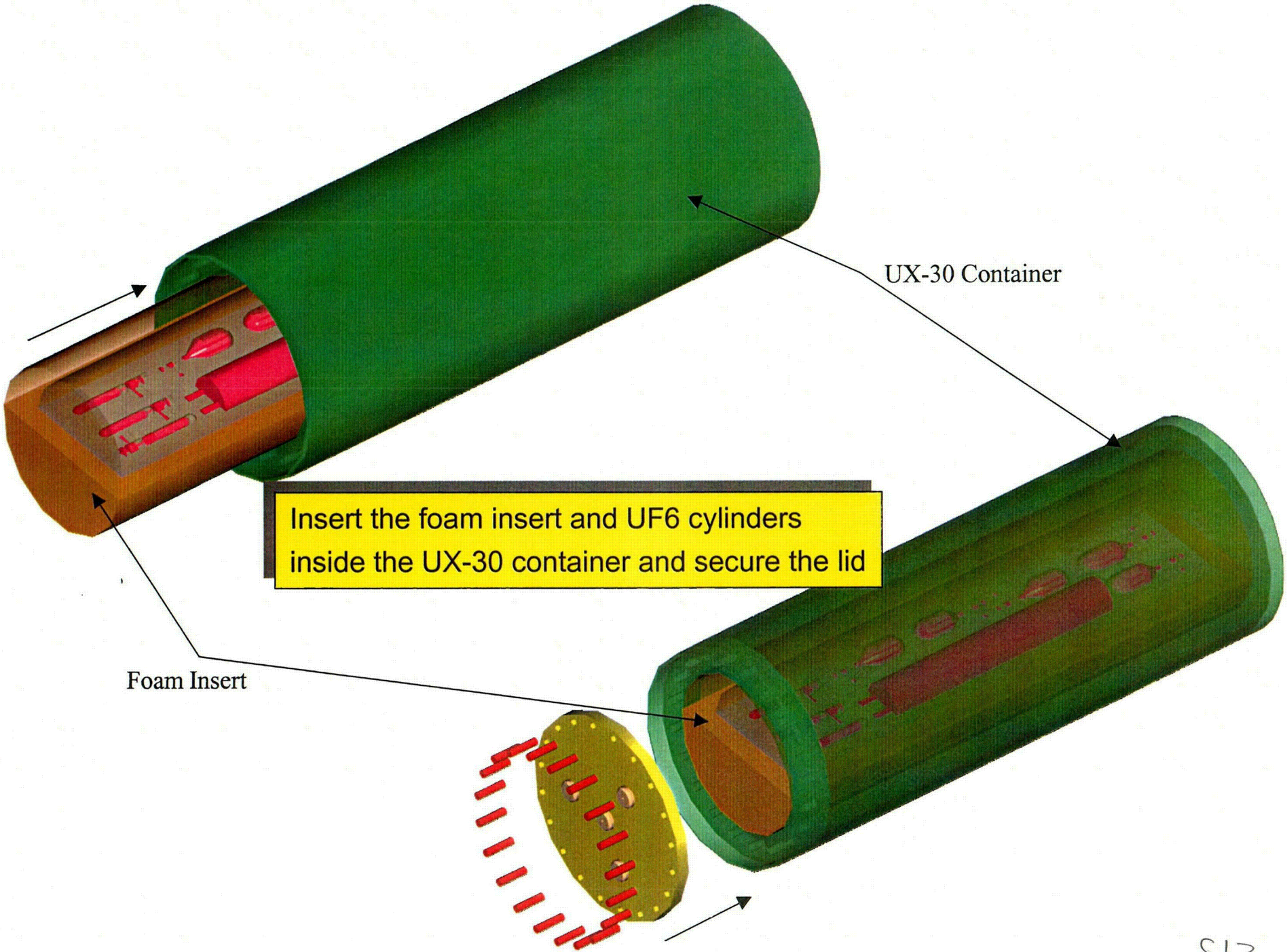
UX-30 Container
Insert the foam insert and UF6 cylinders inside the UX-30 container and secure the lid
Foam Insert

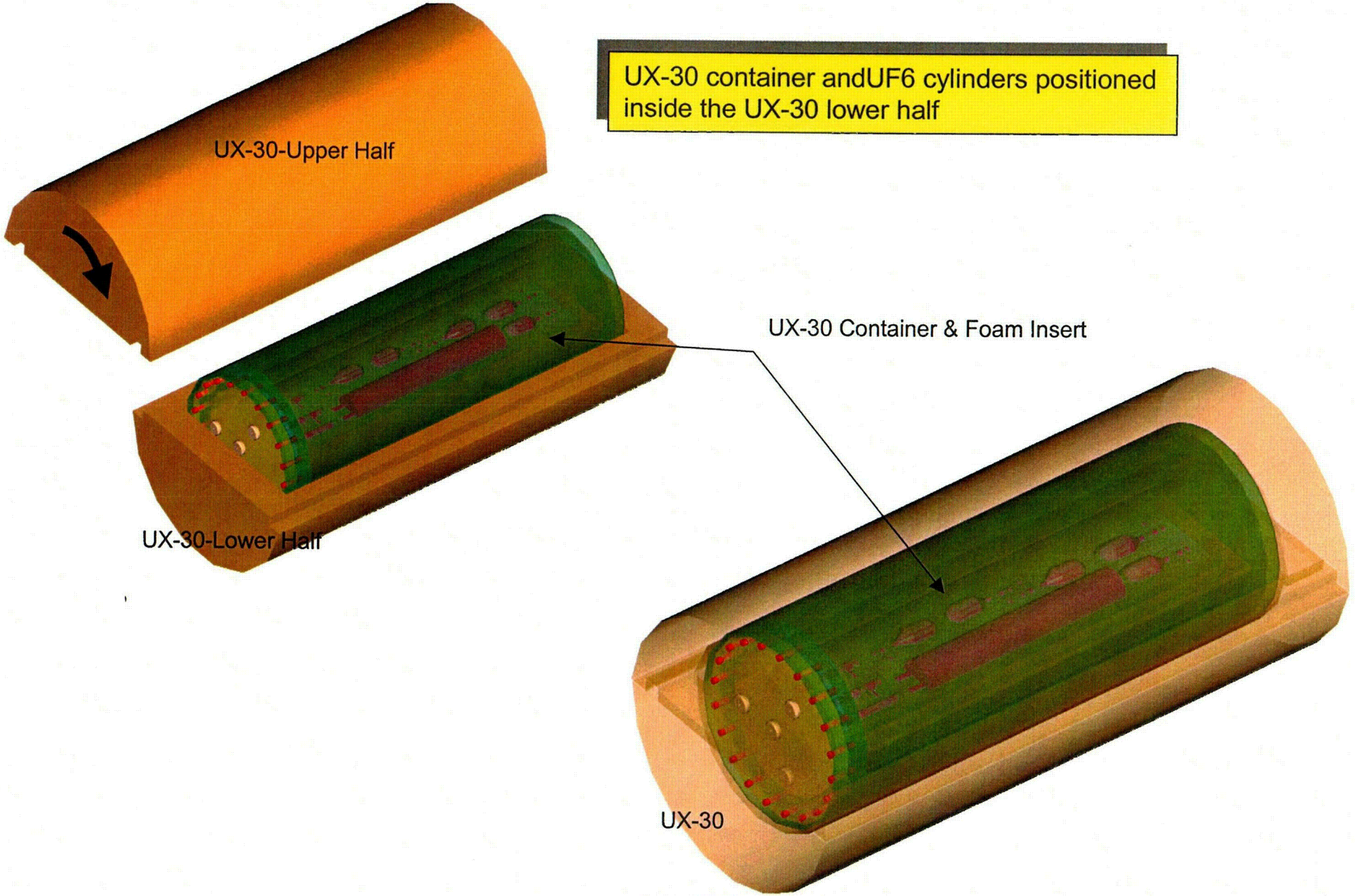
UX-30 container andUF6 cylinders positioned inside the UX-30 lower half
UX-30-Upper Half
UX-30 Container & Foam Insert
UX-30-Lower Half
UX-30
UX-30 container and UF6 cylinders secured inside UX-30 and ready for transport