Evaluation of MDS Nordion Transport Package
F-168 and F-168-X (1996) B(U)

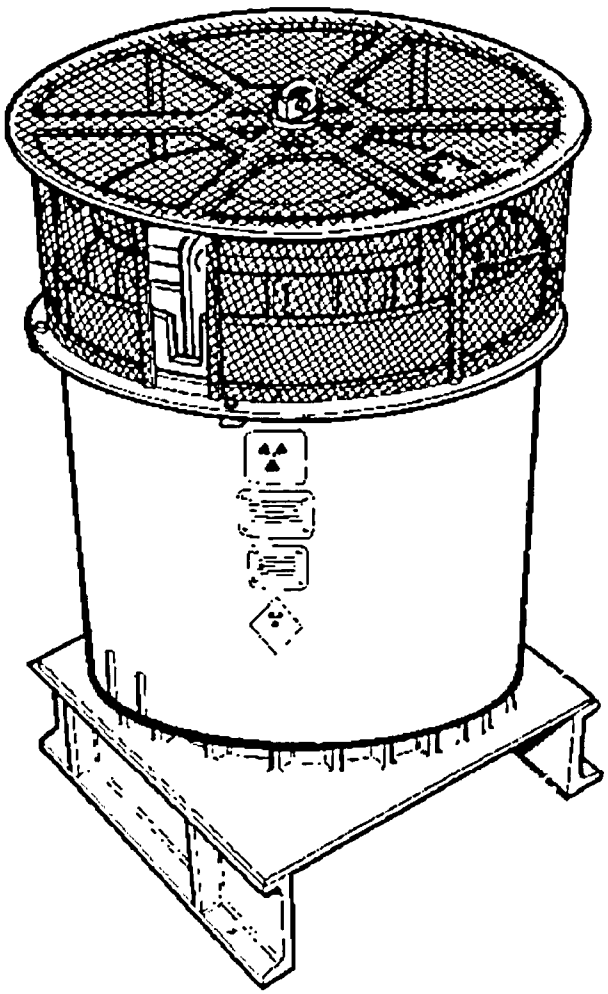

IN/TR 1810 F168 (4)

Non-proprietary Information

MDS Nordion
Science Advancing Health

447 March Road
Ottawa, ON K2K 1X8
Canada

Tel: +1 613 592 2790
Fax: +1 613 592 6937
www.mds.nordion.com

MDS Nordion
Science Advancing Health

December 1, 2004

Dr. Fred Ferate
Radioactive Materials Branch
U.S. Department of Transportation
Research and Special Programs Administration
Office of Hazardous Materials Technology, DHM-23
Room 8430
400 Seventh Street S.W.
MS T-13D13
Washington, D.C.
20590

RE: Endorsement of the F-168 and F-168-X Transport Certificate USA/0617/B(U)-96

Dear Dr. Ferate:

Further to the U.S. Department of Transportation email dated September 8, 2004, please find attached the response to the US Nuclear Regulatory Commission and a revised standalone Safety Analysis Report IN/TR 1810 F168 (4). This new Safety Analysis Report now includes the reference appendixes from the MDS Nordion International Inc., "Engineering Assessment of the ability of the F-168 and F-168-X to Meet the Requirements of the IAEA Safety Series No. 6, 1985 Edition (Supplement 1988)," I.E.0004.R90.22, Rev.0, July 1991.

MDS Nordion is requesting a one-year extension of the current endorsement to allow the US Nuclear Regulatory Commission sufficient time to review the response and revised Safety Analysis Report. Please note that the current endorsement expires on December 10, 2004.

Attached are two proprietary copies of the revised Safety Analysis Report, MDS Nordion document number IN/TR 1810 F168 (4) and two non proprietary copies. Attached is an affidavit to support MDS Nordion's request to withhold the above-mentioned document from public disclosure. This document is specific to the design and fabrication of the F-168 and F-168-X transport packages and would enable a third party to manufacture similar transport packages.

If you have any questions or require further information please feel free to contact me by telephone at (613) 592-3400 extension 2421 or by email at mcharette@mds.nordion.com.

Yours sincerely

Marc-André Charette
International Transport & Nuclear Initiatives
Manager, Regulatory Affairs

Attached: IN/TR 1810 F168 (4)

Copy to: Mike Krzaniak, Jeff Ramsay, Luc Desgagne, MDS Nordion

Response to USNRC Request for Additional Information
Docket No. 71-3070
Model Nos. F-168 and F-168X
Canadian Package Design
Certificate No. CDN/2081/B(U)-96

1. Provide Reference No. 3, V. Shah, Nordion International Inc., *Engineering Assessment of the Ability of the F-168 and F-168-X to Meet the Requirements of IAEA Safety Series No. 6, 1985 Edition (Supplement 1988)*, IE.0004.R90.22, Rev. 0, July 1991.

   This reference is heavily relied upon throughout the Safety Analysis Report (SAR). It is cited for virtually every aspect of the package safety features. This information is necessary to ensure that the shielding and containment requirements for the packages are met, and is need to ensure compliance with IAEA No. TS-R-1, *Regulations for the Safe Transport of Radioactive Material, 1996 Edition (Revised).*

Response

The Safety Analysis Report (SAR), IN/TR 1810 F168, was revised to include all relevant information referenced from Reference No.3. The complete standalone SAR is provided. Four copies of the revised SAR are attached, two "proprietary" and two "non-proprietary" copies.

2. Describe the special stowage provision, given that the package heat load exceeds 15 W/m^2.

   This information is needed to show compliance with IAEA No. TS-R-1, Paragraph 656.

Response

Special stowage instructions for the package, as its heat load exceeds 15 W/m^2, are that the package should be kept uncovered, open to the air, and if transported in a freight container, the freight container should be left uncovered. The packages are also labelled as high heat emitters with instructions not to store them in insulated or refrigerated containers or other insulated spaces, and not to place other cargo within 1.52 metres of each container. Sample shipping documents are provided in Appendix 5 of the updated SAR.

3. Provide justification that the lead shielding will not melt during thermal testing of the current design.

   The applicant describes on Page 35 of the SAR that during early thermal testing of the package, the lead shielding melted. The applicant later states that to avoid lead melt, the thermal protection was modified and the package was "qualified". Package damage resulting from the mechanical testing should be considered in the response. Paragraph 727 identifies "fracture weld zone in the upper cone next to the lead, failure of the lower weld of the top vermiculite zone, and failure of the weld adjacent to, but not on, the drain line exit." This information is needed to show compliance with IAEA, No. TS-R-1, Paragraphs 655, 656(B)(ii)(i), and 716(b).

Response

The fracture weld zone in the upper cone next to the lead, failure of the lower weld of the top vermiculite zone, and failure of the weld adjacent to, but not on, the drain line exit were hairline in nature, were located in areas protected by the fireshields, and were close to, but not in direct contact with the lead shielding. The package design was modified after the drop test to reinforce the welds at these locations and the fireshields were modified to provide better impact absorption and thermal protection from the fire.

See the response to Question 5 for justification that the lead shielding will not melt during thermal testing of the current design.

4. Describe how the current design of the fire shields prevents the 800°C fire from heating the fins, canister wall (which is in direct contact with the lead) and canister top.

   Page 37 of the SAR states the following, "The insulated fireshield that is currently used on F-168 and F-168-X transport packages is better that the one used for the thermal test simulation". According to the SAR, the current fireshield is approximately five inches longer than the one used for thermal test. Staff notes that there is no closed barrier to prevent the fire from coming in direct contact with the canister side and top; therefore, it is not clear as to why a taller shield would provide a configuration to ensure the lead shielding will not melt during the thermal tests. This information is needed to show compliance with IAEA No. TS-R-1, Paragraph 728.

Response

The primary mode of heat transfer during the fire condition is radiation. The amount of heat transferred by radiation depends on the fraction of an absorbing surface visible to an emitting surface, or the view factor between the surfaces. Increasing the height of the fireshield reduces the visibility of the container surface to the fire and, therefore, reduces the radiation heat transfer and heating of the container.

The openings at the top and bottom of the fireshield are designed to cool the package under normal conditions of transport. Under normal conditions, the primary modes of heat transfer are conduction and convection, which depend on the outer surface area of the package and venting to the outside. The fins on the container increase the external surface area, while the openings at the top and the bottom allow airflow to remove heat from the package.

5. Describe the orientation of the package during the thermal testing. Justify how the orientation used leads to the maximum damage. Additionally, describe the damage to the package from the Paragraph 727 mechanical testing, and justify its use during the thermal test.

   Staff considers the possibility that open fin passageways from an undamaged package could lead to more lead heating/melting than a damaged package. This information is needed to show compliance with IAEA No. TS-R-1, Paragraph 728.

Response

In the physical fire test, the package was centered in the furnace in an inverted position and two sets of four equally spaced burners, at the top and bottom of the furnace, were directed at the package. As is stated above, having the fire engulf the package from underneath and above maximizes the hot air that could flow through the open fin passageways and, therefore, represents the maximum damage

Design improvements were made to the F-168/F-168-X design after the physical fire test, as noted in Paragraph 656 of the SAR. The improved design was then subjected to a series of validated thermal computed simulations, also discussed in Paragraph 656 of the SAR.

The mechanical damage to the original drop-tested package is summarized in Paragraph 656 of the SAR. All of the crushing damage from the drops improves the performance of the package in the fire, by reducing the effective area, the view factors and the airflow into the fin enclosures.

As detailed in Appendix 6 of the SAR, "A deformed outer structure...will provide a barrier to the free flow of gases over the shielding vessel, reducing the heat transfer to the vessel during the fire". Also, additional air space within a deformed container will act as a thermal barrier to the fire. Therefore, the worst-case condition is taken where thermal resistance offered by the air space is at a minimum and where the heat transfer to the container via the fins is at a maximum. This worst-case scenario occurs when the F-168 is undeformed. This is corroborated by the fact that the most recent finite element model (Appendix 6) calculated temperatures 50 to 100°C hotter than the actual fire test at the top of the package where the fireshield was crushed into the plug (Figure A6-19 of Appendix 6 of the SAR). The package was, therefore, modeled

in the undamaged condition, which maximizes the heat transferred to the package during the fire.

The conclusion of the thermal analyses presented in the SAR (Paragraph 656 and Appendix 6) is that there would be no lead melt in the package under the IAEA, TS-R-1 accident fire conditions.

6. Provide Figures A6-5 through A6-8, and A6-14 through A6-17, as referenced in Appendix 6 of the SAR.

   This information is needed to show compliance with IAEA No. TS-R-1, Paragraph 728.

Response

Appendix 6 was revised in response to question 7 below. The revised Appendix is provided in the updated SAR, including all the requested figures.

7. Describe the effects of a solar load prior to the initiation of the fire transient in Load Case 5, which is described in Appendix 6 of the SAR.

   Appendix 6, Section 6.5 states that the fire transient was used with initial temperatures from the steady state analysis in Load Case 3. Staff notes that Load Case 3 does not include any solar load. This information is needed to ensure compliance with the requirements of IAEA, No. TS-R-1, Paragraph 728, which requires consideration of solar effects prior to the initiation of the fire.

Response

Appendix 6 was revised to include the solar load in the calculation of the initial temperatures for the fire transient. The revised Appendix is provided and demonstrates that the integrity of the shielding is maintained during the fire.

The steady state temperature of the package is not significantly affected by the solar heat load. The load is incident upon the top and radial fireshields. The flow of air under the top fireshield and between the radial fireshield and the main body dissipates the incident solar heat.

8. Provide the limiting conditions that will determine whether that package will be shipped as "exclusive use".

   Paragraph 652 of the application states that the top center of the package heat screen exceeds 50°C by direct measurement of a thermocouple (the reading was 52°C). Staff notes that this area appears to be an accessible surface; the package is approximately 4 feet high, and the center of the package is less than an arm's length away.

Response

The F-168 and F-168-X packages are always shipped "exclusive use", except when transported by air as discussed in Paragraph 617 of the SAR.

9. Provide shielding analysis which shows that dose rates for any external accessible surface of the package do not exceed 2 mSv/h (200 mrem/h) for any of the isotopes to be shipped. Additionally, show that dose rates do not exceed 0.1 mSv/h (10 mrem/hr) at one meter from the package.

   IAEA No. TS-R-1, Paragraph 716, requires that the integrity of the shielding has been retained to the extent required. Further, Paragraph 530 requires that the transport index of the package be less than 10, and Paragraph 531 requires that the maximum radiation level at any point of any external surface of a package not exceed 2 mSv/.h. The SAR does not contain any measured dose rates, or any shielding analysis. This information is necessary to ensure that the shielding requirements of the packages are adequate.

Response

MDS Nordion does not allow shipment if the transport index is greater than 10 (0.1 mSV/h at 1 m from the package), or if the surface radiation level is greater than 2 mSv/h. Recent radiation surveys of F-168 and F-168-X transport packages included in Appendix 9 of the revised SAR show that the requirements of TS-R-1, Paragraphs 530 and 531 are met.

The shielding analysis to show compliance with IAEA No. TS-R-1, Paragraph 716 is provided in Appendices 7, 10, 13 and 14 of the revised SAR.

10. Provide shielding analysis which shows that after the damage incurred from the tests specified in Paragraphs 726, 272, 728 and 729, the dose rates will not exceed 10 mSv/h (1 rem/hr) at one meter from any accessible surface for the package for any of the isotopes requested for shipment.

    This information is needed to show compliance with IAEA No. TS-R-1, Paragraph 656.

Response

The shielding analysis to show compliance with IAEA No. TS-R-1, Paragraph 656 is provided in Appendix 7, 10, 13 and 14 of the revised SAR.

11. Show that all normal form sources meet the requirements of Paragraph 656.

    The applicant states that the containment boundary of the normal form sources is the source encapsulation. The applicant must show that the containment boundary of the package meets leak rate requirements; therefore, those normal form sources must be leak tested to show compliance with the requirement in IAEA No. TS-R-1, Paragraph 656.

Response

There are three radioisotopes, cobalt-60, antimony-124, and cesium-137, which make up the radioactive contents of the sealed sources in the F-168 or F-168-X package. All of the sealed sources used for transport have been subjected to ANSI/ISO or Special Form testing, as listed in Appendix 12 of the revised SAR, or are similar in design to those that have been tested. It is concluded that all of the sources listed in Appendix 12 are leak tight and meet the requirements defined in IAEA No. TS-R-1, Paragraph 656.

REFERENCES

IAEA Safety Standards Series, Advisory Material for the IAEA Regulations for the Safe Transport of Radioactive Material, Safety Guide, No. TS-G-1.1 (ST-2), International Atomic Energy Agency, Vienna, 2002.

AFFIDAVIT

I, E. S. Martell, in my capacity as Vice President, Quality & Regulatory Affairs, having been duly authorized to apply for withholding from disclosure of proprietary information by and on behalf of MDS Nordion, a division of MDS (Canada) Inc., ("MDS Nordion"), do depose and say:

1. I, E.S. Martell, am the Vice President, Quality & Regulatory Affairs, of MDS Nordion.

2. The information contained in the MDS Nordion's document No. IN/TR 1810 F168 (4), "Evaluation of MDS Nordion Transport Package F-168 and F-168-X (1996) B(U)," is the property of MDS Nordion. This document contains proprietary information related to the design of the F-168 and F-168-X transport package.

3. MDS Nordion, has expended extensive funds and manpower in developing the aforementioned document and any release for disclosure of such information to third parties would enable and assist third parties to use the information to fabricate and register a similar transport package without incurring any development costs. This could compromise MDS Nordion's, ability to compete in the marketplace. Therefore, MDS Nordion, submits that the following parts of the MDS Nordion document No. IN/TR 1810 F168 (4), "Evaluation of MDS Nordion Transport Package F-168 and F-168-X (1996) B(U)," should be withheld from public disclosure.

   - Table in Section 2.1
   - Serial numbers in Section 2.2
   - Test results in 617 (Section 5.2)
   - Dimensions in 637 (Section 5.3)
   - Stress results in 643 (Section 5.3)
   - Dimensions and stress results in 646 (Section 5.3)
   - Test results in 652 (Section 5.4)
   - Test results in 656 (Section 5.4)
   - Test results in 662 (Section 5.4)
   - Material properties in Tables 5-1 and 5-2
   - Test results in Table 5-3
   - Materials in Figure 5-1
   - Test data in Figure 5-2
   - Specification removed in Appendix 2 (entire appendix)
   - Specifications removed in Appendix 4 (entire appendix)
   - Test results and analysis in Appendix 6 (entire appendix)
   - Test results and analysis in Appendix 7 (entire appendix)
   - Test results in Appendix 10 (entire appendix)
   - Test results and analysis in Appendix 11 (entire appendix)
   - Material property data in Appendix 13.9
   - Test results and analysis in Appendix 14 (entire appendix)

4. The information has been held in confidence by MDS Nordion, and any disclosure thereof for developmental purposes, has been accompanied by a confidentiality agreement protecting the trade secrets contained herein.

5. The information has been transmitted to and received by the Department of Transportation in the United States in confidence.

6. This information is not available in public sources.

7. The information contained in this affidavit is to the best of my knowledge true and correct.

Sworn before me this 1st day of December 2004 in the City of Ottawa, Ontario, Canada.

Neil J. Gotfrit
Notary Public in and
for the Province of Ontario, Canada

per:

E. S. Martell
V.P., Quality and Regulatory Affairs
MDS Nordion, a division of MDS (Canada) Inc.

Evaluation of MDS Nordion Transport Package F-168 and F-168-X (1996) B(U)

Signatures

Prepared by: _____ Date: 04.12.01
J. Ramsay, Package Engineering

Reviewed by: _____ Date: 04·12·01
M. A. Charette, Regulatory Affairs

Approved by: _____ Date: 041201
M. Krzaniak, Manager, Package Engineering

Document History

Date	Version	Comments	Prepared by	Reviewed by	Approved by
Mar. 2002	1	DCN A2119-D-05A	J. Ramsay	M.A. Charette	M. Krzaniak
Nov. 2002	2	DCN A2119-D-09A	J. Ramsay	M.A. Charette	M. Krzaniak
Jan. 2003	3	DCN A2119-D-10A Table in section 2.4 modified, Appendix 4 updated	J. Ramsay	M.A. Charette	M. Krzaniak
Nov. 2004	4	DCN A2119-D-17			

This document contains information proprietary to MDS Nordion Inc. Any disclosure or use of this information or any reproduction of this document other than the specified purpose for which it is intended is expressly prohibited except as MDS Nordion may otherwise agree in writing.

NOTE: The portion of this text affected by changes is indicated by a vertical line in the margin.

TABLE OF CONTENTS

1. INTRODUCTION 4

2. F-168 AND F-168-X PACKAGE DESCRIPTION 6
   2.1 F-168 Package Description 6
   2.2 F-168-X Package Description 7
   2.3 Shielding 7
   2.4 F-168 and F-168-X Radioactive Contents 8
   2.5 Containment System 9
   2.6 Intended Use of F-168 and F-168-X Packages 9

3. INTRODUCTION, DEFINITIONS, GENERAL, AND ACTIVITY LIMITS AND MATERIAL RESTRICTIONS (SECTIONS I TO IV) 11
   3.1 Introduction (Section I) 11
   3.2 Definitions (Section II) 11
   3.3 General Provisions (Section III) 12
   3.4 Activity Limits and Material Restrictions (Section IV) 14

4. REQUIREMENTS AND CONTROLS FOR TRANSPORT (SECTION V) 15
   4.1 Package Inspection Requirements 15
   4.2 Transport of Other Goods 16
   4.3 Other Dangerous Properties of Contents 16
   4.4 Requirements and Controls for Contamination and for Leaking Packages 16
   4.5 Requirements and Controls for Transport of Excepted Packages 17
   4.6 Requirements and Controls for Transport of LSA Material and SCO in Industrial Packages or Unpackaged 17
   4.7 Determination of Transport Index (TI) 17
   4.8 Determination of Criticality Safety Index (CSI) 17
   4.9 Limits on Transport Index, Criticality Safety Index and Radiation Levels for Packages and Overpacks 18
   4.10 Categories 18
   4.11 Marking, Labelling and Placarding 18
   4.12 Consignor's Responsibilities 19
   4.13 Transport and Storage in Transit 20
   4.14 Customs Operations 22
   4.15 Undeliverable Consignments 22

5. REQUIREMENTS FOR RADIOACTIVE MATERIALS AND FOR PACKAGINGS AND PACKAGES (SECTION VI) 22
   5.1 Requirements for Radioactive Materials 22
   5.2 General Requirements for all Packagings and Packages 23
   5.3 Requirements for Type A Packages 26
   5.4 Requirements for Type B Packages 32
   5.5 Requirements for Type B(M) Packages 38
   5.6 Requirements for Type C Packages 39
   5.7 Requirements for Packages Containing Fissile Material 39

6. TEST PROCEDURES (SECTION VII) AND APPROVAL AND ADMINISTRATIVE REQUIREMENTS (SECTION VIII) 45
   6.1 Test Procedures (Section VII) 45
   6.2 Approval and Administrative Requirements (Section VII) 47

7. CONCLUSIONS 47

8. REFERENCES 47

APPENDIX 1: CURRENT COMPETENT AUTHORITY CERTIFICATES

APPENDIX 2: DESIGN, MANUFACTURING AND OPERATING SPECIFICATION

APPENDIX 3: SEALED SOURCE AND CARRIER SPECIFICATION SHEETS

APPENDIX 4: QUALITY ASSURANCE PROGRAM DOCUMENTS

APPENDIX 5: SAMPLE SHIPPING DOCUMENTS

APPENDIX 6: SIMULATION OF IAEA THERMAL TEST REQUIREMENTS

APPENDIX 7: THERMAL TEST

APPENDIX 8: LIFTING AND TIE-DOWN ANALYSIS

APPENDIX 9: RADIATION SURVEYS OF F-168

APPENDIX 10: RADIATION SURVEYS BEFORE AND AFTER REGULATORY TESTS

APPENDIX 11: STEADY STATE HEAT TRANSFER

APPENDIX 12: SEALED SOURCE CERTIFICATES

APPENDIX 13: MISCELLANEOUS TOPICS

APPENDIX 14: DROP TESTS

1. INTRODUCTION

This report provides information in support of an application for a Type B(U) certificate for the MDS Nordion F-168 and F-168-X transport packages, described herein, to meet the requirements of IAEA TS-R-1, Regulations for the Safe Transport of Radioactive Materials, 1996 Edition (Revised) [1] as well as the Packaging and Transport of Nuclear Substance Regulations [2].

MDS Nordion is seeking an amendment to the Radioactive Material Type B(U) Package Design Approval Certificates for the F-168 and F-168-X transport packages currently licensed under CDN/2063/B(U)-85 and CDN/2064/B(U)-85. These certificates are attached in Appendix 1. A summary of the transport package serial numbers and certificates is as follows;

Serial Numbers	CNSC Certificate
F-168 numbers 53 to 76 inclusive; 83 and up.	CDN/2063/B(U)-85, Rev. 5
F-168-X numbers 77-X, 78-X, 79-X, 80-X, 81-X and 82-X.	CDN/2064/B(U)-85, Rev. 3

MDS Nordion requests the two Canadian certificates above be combined into one certificate, since these packages are virtually identical as discussed in Section 2.

The specification sheet for the F-168 and F-168-X is shown in Figure 1-1.

Parts List

1. Upper Fireshield
2. Optional Heat Screen
3. Retaining Brackets (4) for Upper Fireshield
4. Radiation Caution Plate
5. MDS Nordion Identification Plate
6. Fireshield (Removable) - O.D. 1013 mm (39.88 in.), Laminated Construction: 2 x 6.3 mm (0.25 in.) Steel + 25.4 mm (1 in.) Kaowool
7. Warning Plate "CAUTION - HEAT EMITTER - DO NOT STORE IN INSULATED OR REFRIGERATION CONTAINER OR INSULATED SPACE"
8. Ceramic Insulation - Steel Encased
9. Vermiculite Packing
10. Gasket (Neoprene)
11. 7/8 - 9 Hex Bolt (8)
12. Wire Seal
13. 3/8 In. NPT Pipe Plug (2)
14. Plug Lift Lug
15. Vent Tube
16. Plug
17. Cavity: 479 mm x 162 mm Dia. (18.87 in. x 6.37 in. Dia.)
18. Radioactive Contents and Carrier
19. Drain Tube (sealed at cavity for F-168-X)
20. 3/4 -10 Hex Bolt for Skid (4)
21. Optional Removable Shipping Skid, 54 in. (1370 mm) square
22. Nipple and Drainline Cap (sealed with standard pipe plug for F-168-X)
23. Shield Plate with 3/8 -16 Screws (3)
24. Category Label (2)
25. Eye Bolt
26. Eye Bolt Cover
27. UN Number Label (2)

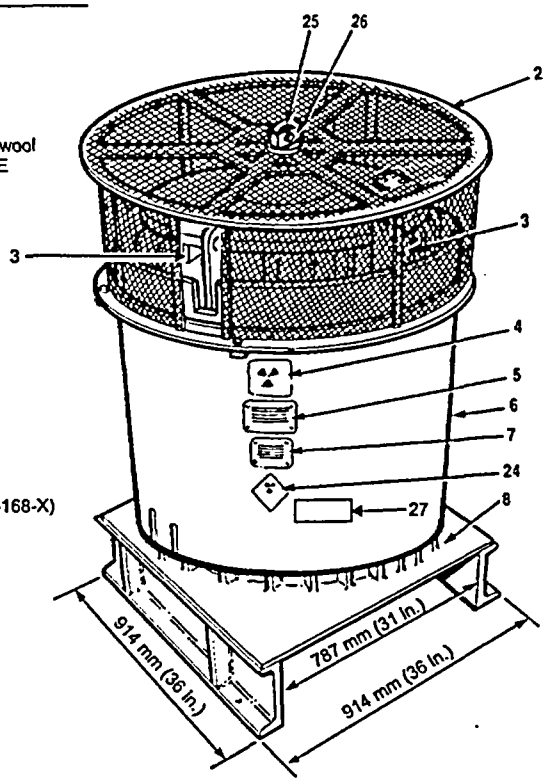

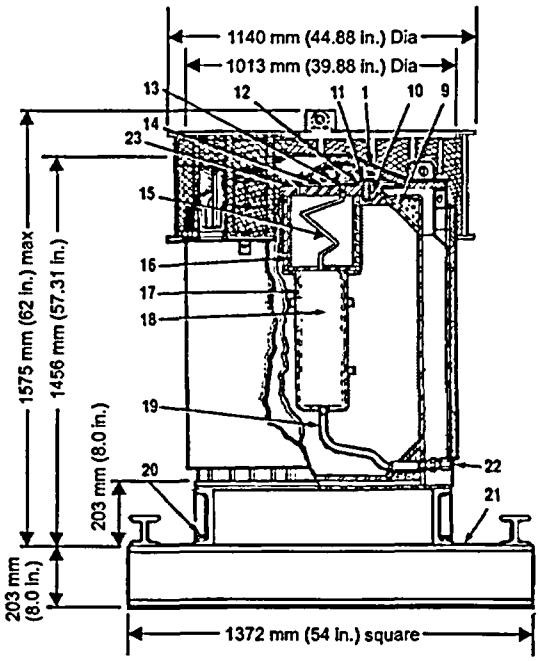

Notes

1. CNSC Certificate CDN/2081/B(U)-96
2. Meets IAEA Type B(U) Requirements
3. Steel encased lead shielding: 266 mm (10.5 in.)
4. Gross Weight: 5445 kg (12,000 lb.)
5. Plug Weight: 177 kg (390 lb.)
6. Projected Floor Loading: 2900 kg/m² (593 lb/ft²)
7. Radionuclides carried:
   1. Cobalt-60
   2. Antimony-124
   3. Cesium-137
8. Labels may be positioned as illustrated, or 45° to that shown

MDS Nordion
447 March Road, P.O. Box 13500
Kanata, Ontario, Canada, K2K 1X8
Tel: (613) 592-2790 · Fax. (613) 592-6937

TITLE
F-168 and F-168-X Transport Package (To IAEA 1996 Transport Regulations)

REF. IN/SS 1812 F168X F116801-001/F116801-020 | REVISED Nov 02 | DCN A2119-D-08A

THIS DRAWING IS THE PROPERTY OF MDS NORDION AND IS SUBMITTED FOR CONSIDERATION ON THE UNDERSTANDING THAT THERE SHALL BE NO EXPLOITATION OF ANY INFORMATION CONTINUED HEREIN EXCEPT WITH THE SPECIFIC WRITTEN AGREEMENT OF MDS NORDION.

DATE Nov 2001 | DRAWN LSW | CHECKED JR | APPROVED MK | No. F-168(-X) (1996) | ISSUE 2 | SHEET 1 OF 2

Figure 1-1: F-168 and F-168-X (1996) Transport Package Specification Sheet

2. F-168 AND F-168-X PACKAGE DESCRIPTION

2.1 F-168 Package Description

The F-168 transport package is shown in Figure 2-1. It is comprised of a vertical cylindrical assembly consisting of:

1. a container body assembly which is a lead shielded (254 mm) steel-encased vertical cylindrical assembly, and
2. a lead shielded steel-encased plug assembly.

In addition, there are other assemblies which envelope the basic container assembly. They are:

1. an external cylindrical fireshield,
2. a top shield cap (i.e. fire cap),
3. an optional heat screen,
4. a permanent structural steel skid, and
5. an optional load spreader skid.

This packaging has the following overall dimensions, total weight and floor loading;

	With Heat Screen	Without Heat Screen
Height (mm)	1750	1650
Width (mm)	1372	1372
Length (mm)	1372	1372
Total Weight (kg)	5445	5400
Floor Loading (kg/m^2)	2900	2870

The steel-finned container is covered on the top by the fire cap and on the sides by the cylindrical fireshield, constructed to provide thermal and impact protection to the "flask" (i.e. the lead shielded container). The top thermal shield consists of a layer of insulation sandwiched between two steel plates and also incorporating ventilation holes for air circulation. It is designated as a shield cap (i.e. fire cap). The cylindrical fireshield consists of a layer of insulation sandwiched between steel cylinders. The bottom is protected by a steel-encased sheet of insulation, sandwiched between the shipping skid and the bottom of the flask, to provide thermal insulation. An optional personnel "heat screen" barrier can be attached over top of the packaging "fire cap".

The outside of the shielding vessel is equipped with vertical cooling fins. Six of the cooling fins are designed as lifting lugs. Any two, directly opposite each other, can be used to handle the entire package. Alternately, the skid and the optional load spreader are designed to accept the standard platform truck or similar mechanical means for handling.

Appendix 2 contains the specification document IN/DS 1811 F168 used for the design, manufacture and operation of the F-168 transport packages. All transport packages are subject to the Radioactive Material Transport Package Quality Plan in Appendix 4.

There are currently [redacted] F-168 (1985) packagings in service, identified by the following serial numbers:

Serial Number	Quantity
[redacted]	[redacted]
[redacted]	[redacted]
[redacted]	[redacted]
[redacted]	[redacted]
[redacted]	[redacted]
[redacted]	[redacted]
[redacted]	[redacted]
[redacted]	[redacted]

It is possible that some of these will be converted to F-168-X service in the future.

2.2 F-168-X Package Description

The F-168-X packaging is identical in all respects to the F-168 packaging, save for the following exceptions:

1. The termination of the ventline and the drainline of the F-168-X packaging at the cavity end are permanently sealed by a stainless steel plug.
2. The F-168-X is used for dry, in-cell loading and unloading operations.

The following [redacted] F-168-X (1985) packagings are currently in service:

[redacted].

2.3 Shielding

The shielding for the F-168 and F-168-X consists of a lead-filled "flask proper" and "closure" plug. The outer cylindrical jacket is 9.5 mm (3/8 inch) thick ASTM A-36 plate. This is filled with a minimum thickness of 254 mm (10 ¼ inch) lead (ASTM B-29), designed to shield 200,000 Ci of cobalt-60 in the central cavity, for a maximum permissible radiation field of 200 mrem/h on the outside surface of the package and 10 mrem/h at 1 metre from the surface of the package.

The lead-filled stainless steel closure plug is secured by eight, 7/8-9 fasteners (ASTM A-320 Grade B8), clamping a neoprene gasket under the plug flange around the top of the cavity.

At the top of the closure plug, a shield plate is installed to provide additional shielding to attenuate radiation streaming from the gap between the closure plug and the container.

2.4 F-168 and F-168-X Radioactive Contents

The existing F-168 (1985) and F-168-X (1985) package authorised contents are listed in the Radioactive Material Type B(U) Package Design Approval Certificates in Appendix 1.

MDS Nordion is seeking authorisation to ship the following contents:

Radionuclide	Max. Quantity (TBq)	Form	Max. Decay Heat (Watts)	Encapsulation
Cobalt-60	7,400	Metal pellets, metal wafers, metal slugs, stainless steel clad wire, aluminum clad cobalt slugs	3,200	C-132, C-133, C-146, C-151, C-177, C-185, C-188, C-189, C-190, C-198, C-199, C-200, C-238, TC-239, C-246, C-247, C-248, C-252, C-306, C-335, XC-318, XC-325, C-348, C-442, AC-191*, AC-195*, AC-345*, AC-339*, welded stainless steel capsules that meet the requirements of the International Organization of Standardization International Standard 2919 (First Edition) under classification number E53424, or Special Form encapsulations, all with the capsules retained within a holder that distribute them throughout the cavity volume.
Cobalt-60	2,590	Metal slug aluminum sheathed	1,070	C-350 or Special Form encapsulations retained within a holder that distribute them throughout the cavity volume.
Cobalt-60	5,550	Metal slug nickel plated	2,320	C-351 or Special Form encapsulations retained within a holder that distribute them throughout the cavity volume.
Antimony-124	1,850	Cast metal	660	C-232 or Special Form encapsulations retained within a holder that distribute them throughout the cavity volume.
Cesium-137	3,700	Cesium chloride	522	Special Form encapsulation retained within a holder that distribute them throughout the cavity volume.

*Transported in F-168-X only.

Combination loading of the above materials is authorised provided that the sum of the ratios of loaded activity to authorised activity, for all material loaded, does not exceed 1.0.

Sources are placed into a source holder or a carrier which is then inserted into the F-168 or F-168-X cavity. Note that specific reference to source carriers or holders has been removed for all contents, to be consistent with the 200,000 Curie maximum content requirement. This allows more flexibility in the loading of the containers, provided the activity is distributed and passes the radiation survey.

The ISO 2919 requirement for capsules in the cobalt-60 7,400 TBq maximum quantity category has also been reduced to E53424 from E53434 relative to the existing authorised contents list of the F-168 (1985). This classification was intended to meet the Class IV wet panoramic irradiator requirement, which is E53424, and therefore the classification has been changed in the requested list of authorised contents. A Special Form allowance has also been added for all radionuclides and activity levels.

The MDS Nordion specification drawings for current source models and source carriers and holders are included in Appendix 3.

All capsules are fabricated of stainless steel and sealed by fusion welding. All sealed sources are fabricated to a technical specification as outlined in the Sealed Source Quality Plan in Appendix 4.

2.5 Containment System

The containment system is defined as the outermost envelope of the encapsulated cobalt-60, or antimony-124, or cesium-137 sealed source assembly.

2.6 Intended Use of F-168 and F-168-X Packages

The current F-168 and F-168-X shipping packaging is primarily used to transport radioactive material between MDS Nordion Inc. in Kanata, Ontario and various irradiation facilities around the world.

The F-168 container is normally loaded and unloaded underwater. The vent tube and drain line are specifically designed to allow the cavity to completely drain upon retrieval from the pool, with the closure plug in place. The F-168 container may also be dry loaded, while the F-168-X container is always dry loaded. Both packagings may be lifted by the use of slings and shackles attached to two lifting lugs on the container. The packaging may also be raised by means of a large platform truck or equivalent, by lifting from under the shipping skid.

The optional large shipping skid is removable for easier handling while loading and unloading in the pools. Its use depends on transportation logistics. The skid can be reattached for storage and transport.

Prior to shipping, a radiation survey is conducted to ensure that the fields at the surface and at 1 metre from the surface of the package fall within the allowable transport regulation limits [1, 2 and 4].

Parts List

1. Upper Fireshield
2. Optional Heat Screen
3. Retaining Brackets (4) for Upper Fireshield
4. Radiation Caution Plate
5. MDS Nordion Identification Plate
6. Fireshield (Removable) - O.D. 1013 mm (39.88 in.), Laminated Construction: 2 x 6.3 mm (0.25 in.) Steel + 25.4 mm (1 in.) Kaowool
7. Warning Plate "CAUTION - HEAT EMITTER - DO NOT STORE IN INSULATED OR REFRIGERATION CONTAINER OR INSULATED SPACE"
8. Ceramic Insulation - Steel Encased
9. Vermiculite Packing
10. Gasket (Neoprene)
11. 7/8 - 9 Hex Bolt (8)
12. Wire Seal
13. 3/8 in. NPT Pipe Plug (2)
14. Plug Lift Lug
15. Vent Tube
16. Plug
17. Cavity: 479 mm x 162 mm Dia. (18.87 in. x 6.37 in. Dia.)
18. Radioactive Contents and Carrier
19. Drain Tube (sealed at cavity for F-168-X)
20. 3/4 -10 Hex Bolt for Skid (4)
21. Optional Removable Shipping Skid, 54 in. (1370 mm) square
22. Nipple and Drainline Cap (sealed with standard pipe plug for F-168-X)
23. Shield Plate with 3/8 -16 Screws (3)
24. Category Label (2)
25. Eye Bolt
26. Eye Bolt Cover
27. UN Number Label (2)

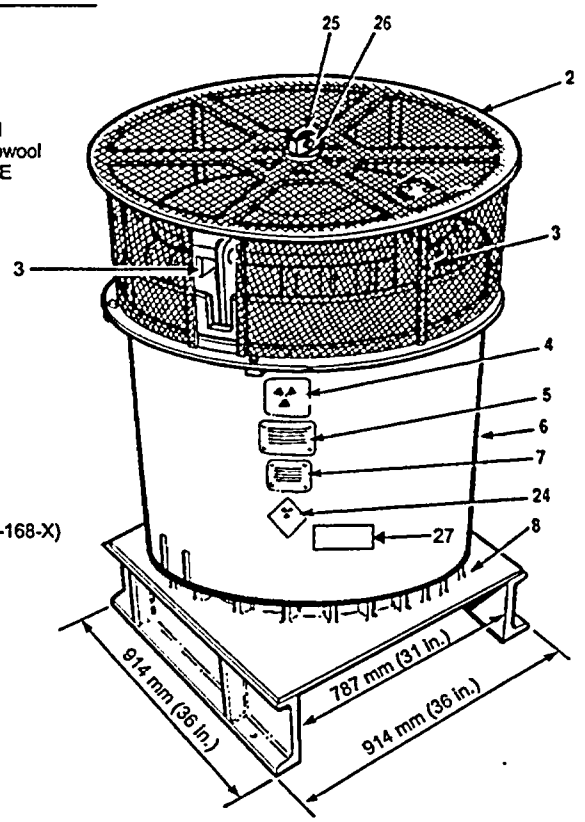

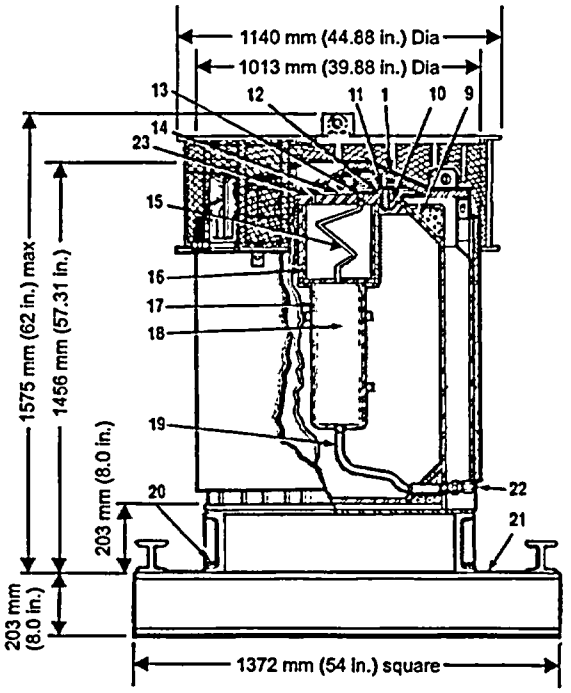

Notes

1. CNSC Certificate CDN/2081/B(U)-96
2. Meets IAEA Type B(U) Requirements
3. Steel encased lead shielding: 266 mm (10.5 in.)
4. Gross Weight: 5445 kg (12,000 lb.)
5. Plug Weight: 177 kg (390 lb.)
6. Projected Floor Loading: 2900 kg/m^2 (593 lb/ft^2)
7. Radionuclides carried:
   1. Cobalt-60
   2. Antimony-124
   3. Cesium-137
8. Labels may be positioned as illustrated, or 45° to that shown

Figure 2-1: F-168 and F-168-X Transport Package: Identification of Components

3. INTRODUCTION, DEFINITIONS, GENERAL, AND ACTIVITY LIMITS AND MATERIAL RESTRICTIONS (SECTIONS I TO IV)

In this section it is demonstrated that the F-168 and F-168-X packages comply with the requirements of the IAEA TS-R-1, Regulations for the Safe Transport of Radioactive Materials, 1996 Edition (Revised) [1]; Section I – Introduction, Section II – Definitions, Section III – General Provisions, and Section IV – Activity Limits and Material Restrictions.

The following paragraph numbers correspond to the relevant passages in the ST-1 1996 IAEA Regulations [1]. Where specific design requirements are not specified in detail, other recommendations, codes or standards are used and referenced throughout the text.

3.1 Introduction (Section I)

Background

101-103 These are introductory paragraphs describing the purpose of the Regulations and their applicability. It is recognized that they apply to the F-168 and F-168-X transport packages. In this submission, it is shown that the design, fabrication, inspection and maintenance, and the preparation for shipment of the F-168 and F-168-X transport packages are in accordance with these Regulations.

Objective

104 This is an introductory paragraph describing the objectives of the Regulations. It is recognized that it applies to the F-168 and F-168-X.

105 Quality assurance and compliance assurance are discussed in Paragraphs 310 and 311, respectively.

Scope

106-108 These are introductory paragraphs describing the scope of the Regulations. It is recognized that they apply to the F-168 and F-168-X.

109 There are no other dangerous properties of the cobalt-60, antimony-124 or cesium-137 to be shipped in the F-168 and F-168-X packages as per Paragraphs 507 and 616.

It is the responsibility of the carrier to ensure that this packaging is properly separated from any other dangerous goods.

Structure

110 These are introductory paragraphs describing the structure of the Regulations. It is recognized that they apply to the F-168 and F-168-X.

3.2 Definitions (Section II)

201-248 These paragraphs define terms used throughout the Regulations. There are no additional requirements for packaging and packages.

3.3 General Provisions (Section III)

Radiation Protection

301 MDS Nordion has an extensive radiation protection program. All MDS Nordion employees who work with radioactive material are classified and trained as Nuclear Energy Workers for which there are many training components. Furthermore, employees who handle, offer for transport or transport radioactive material must successfully complete an MDS Nordion course on the Transportation of Dangerous Goods (TDG). Refer to Paragraphs 302-303 and 305-307 for more details on the radiation protection program. These paragraphs describe some of the components of MDS Nordion's radiation protection program which aid in the fulfillment of the requirements to limit radiation exposure to transport workers and the general public, as described in IAEA Safety Series No. 9 [4]

302 MDS Nordion provides training in the Transportation of Dangerous Goods (TDG) and radiation protection to MDS Nordion employees and, in some cases, carrier staff. The training is provided so that individuals involved in transporting can keep radiation doses to themselves and members of the public "as low as reasonably achievable" (ALARA). Training, in addition to TDG, may also be provided for specific handling procedures. The TDG regulations require workers to carry the Certificate that is issued on passing the test at the end of the course. The Certificate issued by MDS Nordion is valid for 2 years. The radiation safety program at MDS Nordion gives specific training to those groups involved in package engineering, distribution, production, distribution, shipping and transport.

303 MDS Nordion is an ISO 9000 registered company. All workers are required to follow standard operating procedures (SOP's) associated to the tasks they must perform. In addition to SOP's and job specific training, all MDS Nordion Nuclear Energy Workers receive training on topics such as the nature of ionizing radiation, the biological effects of ionizing radiation, working safely with radioactive materials and instrumentation for ionizing radiation.

304 It is the responsibility of the competent authority to arrange for the periodic assessments as described in this paragraph

MDS Nordion describes the performance of the radiation protection program in an annual report to the CNSC, enabling them to review the radiation doses to employees and to assess the doses to transport workers and members of the public.

305 Measures employed to control radiation exposure in the transport environment are based on the magnitude and likelihood of exposure. See Paragraph 304 for employee exposure.

Individual monitoring using thermoluminescent dosimeters (TLDs) is conducted for all MDS Nordion Nuclear Energy Workers. MDS Nordion NEWs working with radioactive material may also use direct reading dosimeters in addition to TLDs. Further, MDS Nordion routinely performs area monitoring throughout and adjacent to processing facilities using survey meters, and environmental TLDs to ensure and document that non-Nuclear Energy Workers do not exceed 1 mSv per year.

Records of all of the data discussed above are maintained for a minimum of three years.

306 a) On-site at MDS Nordion, all radioactive material is segregated into zones called either a Radiation Area (no unsealed radioactive material) or an Active Area (where unsealed radioactive material may be present). It is only in these areas where workers may receive an annual dose in excess of 5 mSv. All radioactive packages are segregated to designated locations within the Radiation/Active Area. Access to Radiation/Active Areas is controlled and only permitted to trained Nuclear Energy Workers or those escorted by a trained Nuclear Energy Worker.

b) During transport, it is the responsibility of the carrier to ensure that radioactive materials are appropriately segregated from transport workers and from members of the public in order to ensure that the critical group receives less than 1 mSv per year.

307 It is the responsibility of the carrier to ensure that radioactive materials are appropriately segregated from undeveloped photographic film.

Emergency Response

308 The emergency provisions, as required by Transport Canada for the case of an accident condition, are observed. A 24 hour telephone number is provided on the accompanying documentation, as well as the mandatory Emergency Response form detailing safe actions to take to mitigate the effects of an accident.

309 No dangerous substances will be formed if the radioactive contents are exposed to air or water.

Quality Assurance

310 MDS Nordion maintains an ISO 9000 registered quality system. The MDS Nordion global quality plans for transport packages (IN/QA 0224 Z000) and sealed sources (IN/QA 0562 A000) are included in Appendix 4. The design, manufacturing and operating specification for the F-168 and F-168-X transport packages is included in Appendix 2.

F-168 and F-168-X transport packagings have been subjected to a Quality Assurance program effective from January 1982.

For each serial number of F-168 or F-168-X, a unit history file is kept. Annual inspections are rigorously followed. Interim inspections of each F-168 or F-168-X are carried out prior to each shipment. Any repairs are carried out and recorded in the unit history file. Operational controls ensure that any unit not inspected in the past year cannot be shipped.

Operational experience shows the shielding requirements to be satisfied. Each package is surveyed prior to shipment and the results recorded. If any package fails to meet the requirements of the Regulations, it is not shipped.

Finally, many years of experience with these packages proves them to be safe.

Compliance Assurance

311 It is the responsibility of the CNSC to assure compliance with the Regulations.

Special Arrangement

312 The F-168 and F-168-X transport packages meet Type B(U) requirements. A Special Arrangement Certificate is not required.

3.4 Activity Limits and Material Restrictions (Section IV)

Basic A1/A2 Values

401 As the F-168 and F-168-X transport packages are typically used to ship cobalt-60, antimony-124 and cesium-137 in quantities greater than the Type A limit, they are designed to meet the Type B(U) requirements.

Determination of A1 and A2

402-406 The A_1 and A_2 values for all isotopes shipped in the F-168 and F-168-X are listed in Table 1 of the Regulations [1].

Content Limits for Packages

407-414 The F-168 and F-168-X transport packages are to be licensed as Type B(U) packages. Therefore, these paragraphs do not apply.

415 The maximum activity, nuclides, and form of the radioactive contents of these packages will only be as described herein and as approved by the CNSC.

416 The proposed authorized contents for the F-168 and F-168-X are listed below. Since the maximum quantities for all radionuclides exceed the $3000*A_1$ and $3000*A_2$ limit, the F-168 or F-168-X packages will only be transported by air when they are carrying quantities below the allowable limits.

Radionuclide	Max Quantity (TBq)	$3000*A_1$ (TBq)	$3000*A_2$ (TBq)
Cobalt-60	7,400	1,200	1,200
Antimony-124	1,850	1,800	1,800
Cesium-137	3,700	6,000	1,800

417 The F-168 and F-168-X transport packages are to be licensed as Type B(U) packages. Therefore, this paragraph does not apply.

418 The F-168 and F-168-X transport packages do not contain fissile material. Therefore, this paragraph does not apply.

419 The F-168 and F-168-X transport packages do not contain uranium hexafluoride. Therefore, this paragraph does not apply.

4. REQUIREMENTS AND CONTROLS FOR TRANSPORT (SECTION V)

In this section, it is demonstrated that the F-168 and F-168-X packages comply with the requirements of the IAEA TS-R-1, Regulations for the Safe Transport of Radioactive Materials, 1996 Edition (Revised) [1], Section V – Requirements and Controls for Transport.

The following paragraph numbers correspond to the relevant passages in the ST-1 1996 IAEA Regulations [1]. Where specific design requirements are not specified in detail, other recommendations, codes or standards are used and referenced throughout the text.

4.1 Package Inspection Requirements

Before the First Shipment

501 Tests are performed on each newly fabricated F-168 and F-168-X packaging per Specification IN/DS 1811 F168 (see Appendix 2). Before the first shipment of each F-168 and F-168-X flask, the requirements of Paragraph 501 (a), (b) and (c) are fulfilled as follows:

a) For F-168 and F-168-X packaging, the containment is the sealed source or capsule. In Appendix 13 it is demonstrated that the C-188 containment will maintain its integrity under pressure in normal and accident conditions of transport. Appendix 13 also presents a similar assessment of Teletherapy and cesium-137 capsules. In addition, all of the sealed sources used for transport have been subjected to ANSI/ISO or Special Form testing, as listed in Appendix 12, or are similar in design to those tested.

b) The effectiveness of the shielding is confirmed by an actual radiation survey of each flask, performed with a radioactive source in the cavity, in the "as-shipped" condition. All surfaces of the package are measured, as well as points at 1 metre from all surfaces (see Appendix 9).

c) The F-168 or F-168-X transport packagings do not carry any fissile material nor do they incorporate neutron poisons.

Before Each Shipment

502 Before each shipment of the F-168 or F-168-X packages, the following is verified:

a) MDS Nordion maintains a Quality Assurance Program. Under this program, the Sealed Source Quality Plan and the Radioactive Material Transport Package Quality Plan ensure compliance with the Regulations (refer to Appendix 4).

b) The closure plug lifting lug is rendered inoperable for total container lifting by covering the hole with washers and a bolt and nut; the top shield plate is then bolted over the closure plug, which renders the vent cap, closure bolts and plug lifting lug all inaccessible during transport. The heat screen is attached. The six lifting lugs on the F-168 or F-168-X body are used to lift the container.

c) The requirements specified in transport certificates CDN/2063/B(U)-85 and CDN/2064/B(U)-85 are followed for the F-168 and F-168-X transport packages, respectively.

d) The F-168 and F-168-X packages are not sensitive to transient temperature and pressure changes and, therefore, there is no requirement to hold the packages until equilibrium conditions have been approached.

e) F-168 and F-168-X packages are prepared for shipment as per MDS Nordion procedure IN/DS 1811 F168 (see Appendix 2). This procedure ensures that all openings leading to the sealed sources are closed and sealed to prevent loss of radioactive contents.

f) Special Form sources are designed, fabricated, and tested in accordance with controlled procedures. These procedures ensure that all sources are within the bounds of the applicable Special Form Certificate and the Regulations.

g) Since the F-168 and F-168-X packages do not contain fissile material, this paragraph does not apply.

h) Since the F-168 and F-168-X packages do not contain Low Dispersible Radioactive Material (LDRM), this paragraph does not apply.

4.2 Transport of Other Goods

503 The F-168 and F-168-X packages, which contain radioactive material during transport, do not contain any other items except such articles and documents as are necessary for the shipping and use of the radioactive material. There is no interaction between these items and the packaging or the contents.

504 The F-168 and F-168-X transport packages are not tanks. Therefore, this paragraph does not apply.

505 MDS Nordion will ensure the regulations are complied with should other goods be transported with the F-168 and F-168-X transport packages when shipped under exclusive-use conditions.

506 It is the responsibility of the carrier to ensure that consignments of radioactive materials are segregated from other dangerous goods during transport.

4.3 Other Dangerous Properties of Contents

507 There are no other dangerous properties of the cobalt-60, antimony-124 or cesium-137 to be shipped in the F-168 or F-168-X packages as per Paragraphs 109 and 616 of the Regulations [1].

4.4 Requirements and Controls for Contamination and for Leaking Packages

508 The non-fixed radioactive contamination on any external surface of the F-168 or F-168-X package does not exceed the 4 Bq/cm^2 level specified in Paragraph 508 of the Regulations [1] for Beta and Gamma emitters. Procedures are in place to verify that contamination levels are below this limit (see Appendix 2).

509 The F-168 or F-168-X transport package is not an overpack or freight container. If an overpack or freight container is used to transport the F-168 or F-168-X, it is the responsibility of the carrier to ensure that all the applicable requirements are satisfied.

510 – 511 An emergency response form is included with the shipping documents that accompany the packages during transport (see Appendix 5). It identifies the proper course of action should a damaged or leaking package be identified. In such cases, MDS Nordion and the competent authority are to be notified.

512 It is the responsibility of the carriers to check their transport equipment for contamination.

513 The emergency response form included with each shipment (see Appendix 5) requires action to be taken by qualified personnel only. It is the carrier's responsibility to check the conveyance for contamination in excess of 4 Bq/cm^2 and for radiation levels from fixed contamination in excess of 0.5 mrem/h.

514 This paragraph pertains to overpacks, freight containers or conveyances dedicated to the shipment of LSA or SCO material. Therefore, it does not apply to the F-168 or F-168-X transport package.

4.5 Requirements and Controls for Transport of Excepted Packages

515-519 The F-168 and F-168-X are not normally shipped as excepted packages. They may, however, be shipped as empty packages on occasion. In such a case the packages will satisfy the requirements of paragraph 520. If the packages are shipped as excepted packages, in addition to paragraph 520, they will also satisfy the requirements of paragraphs 515 and 516.

520 MDS Nordion may occasionally ship an empty F-168 or F-168-X package as an excepted package. In such a case, MDS Nordion will ensure that the requirements of this paragraph are satisfied. When the package is being returned to MDS Nordion as an excepted package, it is the consignor's responsibility to ensure that all regulatory requirements for the shipment of excepted packages are satisfied.

4.6 Requirements and Controls for Transport of LSA Material and SCO in Industrial Packages or Unpackaged

521 The F-168 or F-168-X transport package will not be shipped as an Industrial Type 1, Type2, or Type 3 package. Therefore, this paragraph does not apply.

522-525 LSA materials and SCO are not transported in the F-168 or F-168-X transport packages. Therefore, these paragraphs do not apply.

4.7 Determination of Transport Index (TI)

526
a) The Transport Index (TI) is measured at 1 metre from the external surface of the package (see Appendix 2).
b) This sub-paragraph does not apply to the F-168 or F-168-X transport packages.
c) MDS Nordion practice is to round TI readings up to the first decimal place.

527 The TI for F-168 or F-168-X packages is determined as per Paragraph 526 of the Regulations [1].

4.8 Determination of Criticality Safety Index (CSI)

528-529 The F-168 or F-168-X do not carry fissile material. Therefore, these paragraphs do not apply.

4.9 Limits on Transport Index, Criticality Safety Index and Radiation Levels for Packages and Overpacks

530 MDS Nordion does not allow shipment if the transport index is greater than 10 (see Appendix 2).

531 – 532 MDS Nordion does not allow shipment if the surface radiation level is greater than 2 mSv/h (see Appendix 2).

4.10 Categories

533 The F-168 or F-168-X package is transported as a complete package without further containment. It is always transported in one of the three categories below.

CATEGORY I-WHITE, or II-YELLOW, or III-YELLOW LABELS.

The appropriate category labels to be used are dependent upon the surface radiation level and the measured TI readings as per Table VII of the Regulations [1].

MDS Nordion does not allow shipment if the surface radiation level is greater than 2 mSv/h (see Appendix 2).

4.11 Marking, Labelling and Placarding

Marking

534 MDS Nordion's name is permanently engraved or embossed on the identification plates. At least one identification plate is securely mounted on the side of the F-168 or F-168-X.

535 The F-168 or F-168-X are labelled with the United Nations number and proper shipping name as appropriate (usually "UN2916, RADIOACTIVE MATERIAL, TYPE B(U) PACKAGE").

536 The F-168 or F-168-X package gross weight exceeds 50 kg, and therefore, the gross weight is embossed on an identification plate attached to the outside of the package.

537 The F-168 and F-168-X transport packages are to be licensed as Type B(U) packages. Therefore, these paragraphs do not apply.

538 The F-168 or F-168-X package has at least one MDS Nordion identification plate affixed to the outside of the fireshield. The stainless steel embossed plate contains the following information:

1. MDS Nordion.
2. Model and serial number of shipping flask, including the "Type B(U)" designation.
3. The gross weight in kilograms.
4. The floor loading in kilograms per square meter.
5. The appropriate CNSC Certificate Number CDN _____, and U.S.A. Authority Certification Number where applicable.

539 At least one "CAUTION - RADIOACTIVE" stainless steel, embossed plate with the trefoil symbol is affixed to the side of the external surface of the package.

540 LSA materials and SCO are not transported in the F-168 or F-168-X transport packages. Therefore, this paragraph does not apply.

Labelling

541 At least two appropriate Category I-White, or II-Yellow, or III-Yellow labels are affixed to each F-168 or F-168-X package. These labels conform to the respective Category I, II and III models given in Paragraph 533.

The F-168 or F-168-X package does not contain radioactive materials having additional hazardous characteristics as designated in Paragraph 507.

However, at least one "WARNING" plate containing the words "CAUTION – HIGH HEAT EMITTER", "DO NOT STORE IN INSULATED OR REFRIGERATED CONTAINER OR INSULATED SPACE", is affixed to the outside of the package.

The labels for the F-168 or F-168-X package conform to the appropriate model shown in Figures 2 to 4 of the Regulations [1].

542 The labels are affixed to two opposite sides of the outside (fireshield) of the F-168 or F-168-X transport package.

Labelling for Radioactive Contents

543 Each label is completed with the required information on the radionuclide type, activity, and the transport index.

Labelling for Criticality Safety

544-545 The F-168 or F-168-X do not carry fissile material. Therefore, these paragraphs do not apply.

Placarding

546 This paragraph is not applicable, as the F-168 or F-168-X package (and transport trailer) are not designated as a large freight container.

547 This paragraph is not applicable, as the F-168 or F-168-X package is not a tank or freight container.

548 The labels for the F-168 or F-168-X package and the vehicle placards conform to the appropriate model shown in Figures 2, 3, 4 and 6 of the Regulations [1].

4.12 Consignor's Responsibilities

549 When MDS Nordion ships this package, it accepts and complies with the consignor's responsibilities for marking, labelling and placarding (see Appendix 2).

Particulars of Consignment and Consignor's Declaration

550 – 553 When MDS Nordion ships this package with radioactive materials, it includes all of the information and documents required by these paragraphs (see Appendix 2).

Removal of Covering Labels

554 If the F-168 or F-168-X is shipped as an excepted package, the appropriate labels are removed or covered.

Information for Carriers

555 Supplementary operational requirements, if any, are added to the shipper's declaration. An emergency response form is included with the shipping documents (see Appendix 5).

556 The competent authority certificates for F-168 and F-168-X packagings are routinely provided to the carrier.

Notification of Competent Authorities

557 MDS Nordion routinely provides copies of competent authority certificates to other authorities throughout the world.

558
a) The containers are not Type C and therefore this sub-paragraph does not apply.
b) The maximum capacity of the F-168 or F-168-X is 7.4 PBq (200 kCi), which exceeds the 1,000 TBq (27 kCi) limit specified in this paragraph. Therefore, the competent authority in each country that this package may pass through is routinely notified of a shipment prior to the commencement of the shipment, and preferably at least 7 days in advance.
c) The containers are not Type B(M) and therefore this sub-paragraph does not apply.
d) The containers will not be shipped under a special arrangement certificate.

559 When MDS Nordion ships this package with radioactive materials, it includes all of the information and documents required by this paragraph (see Appendix 2). The F-168 or F-168-X shipment notification required by Paragraph 558, shall include this same information.

560 MDS Nordion includes all of the information listed in Paragraph 822 on the application for shipment approval. A separate notification is not required.

Possession of Certificates and Operating Instructions

561 MDS Nordion retains copies of competent authority certificates and preparation for shipment procedures for the F-168 and F-168-X packages. These are routinely provided to other parties, as required by this paragraph of the Regulations [1].

4.13 Transport and Storage in Transit

Segregation During Transport and Storage in Transport

562 See Paragraphs 306, 307 and 506.

563 It is the carrier's responsibility to carry Category II or Category III shipments in accordance with this paragraph of the Regulations.

Stowage During Transport and Storage in Transit

564 It is the carrier's responsibility to safely stow the F-168 and F-168-X during transport.

565 When fully loaded with 200 kCi of cobalt-60 the average surface heat flux of the F-168 or F-168-X package is 493 W/m^2 as calculated below.

The decay of the Co-60 carried inside the F-168 or F-168-X transport package generates 15.4 W of heat per kCi , based on 2504 keV of photon energy and 96 keV of continuous radiation [5], as calculated below:

1000 Ci/kCi * 3.7e+10 dis/s/Ci * 2600 keV/dis * 1.602e-16 J/keV * 1 W/J/s
= 15.4 W/kCi

For 200 kCi of cobalt-60, the heat generated within the F-168 or F-168-X package by the radioactive contents, Q = 200 kCi x 15.4 W / kCi = 3,080 W.

The maximum surface heat flux is therefore calculated as:

$$\frac{Q}{A} = \frac{Q}{2x\frac{(\pi D^2)}{4} + \pi DL} = \frac{3{,}080 \quad Watts}{2x\left[\frac{\pi x(1.013)^2}{4}\right] + (\pi x 1.013 x 1.456)}$$

= 493 Watts/m^2

Where Q = 3,080 Watts internal heat generation as calculated above,
A = Outer surface area of cylindrical sides, and top and bottom ends, of F-168 or F-168-X (projected dimensions).
D = 1.013 m (39.88 in.) Diameter of fireshield
L = 1.456 m (57.31 in.) Height of container (less removable skid and heat screen)

Therefore, the average surface heat flux of the F-168 or F-168-X package exceeds 15 W/m^2. Accordingly, MDS Nordion includes stowage instruction with the consignment to ensure adequate heat dissipation.

566 It is the carrier's responsibility to satisfy the requirements of this paragraph.

567 MDS Nordion does not allow shipment if the transport index is greater than 10 (see Appendix 2).

Segregation of Packages Containing Fissile Material During Transport and Storage in Transit

568-569 The F-168 or F-168-X do not carry fissile material. Therefore, these paragraphs do not apply.

Additional Requirements Relating to Transport by Rail and by Road

570 It is the responsibility of the carrier to ensure that rail or road vehicles are appropriately labelled and placarded.

571 The appropriate United Nations number is displayed on the packaging as specified in this paragraph when the F-168 or F-168-X is shipped as an exclusive-use consignment.

572 Radiation levels on the outer surface of the F-168 or F-168-X packages cannot exceed 2 mSv/h, and at 1 metre from the outer surface cannot exceed 0.1 mSv/h, with a maximum load of 200 kCi. Therefore, the requirements of Paragraph 572 are met.

573 It is the responsibility of the carrier to ensure that no persons other than the driver and assistants are permitted in the vehicle.

Additional Requirements Relating to Transport by Vessels

574 Radiation levels on the outer surface of the F-168 or F-168-X packages cannot exceed 2 mSv/h with a maximum load of 200 kCi. This paragraph does not apply.

575 The F-168 and F-168-X packages have been shown to meet the requirements of Paragraph 566 and do not need to be transported by special use vessel. Therefore, this paragraph does not apply.

Additional Requirements Relating to Transport by Air

576 The F-168 or F-168-X package meets all of the requirements of a Type B(U) package. Therefore, this paragraph does not apply.

577 The F-168 or F-168-X is not a Type B(M) package, and is not continuously vented during transport. Therefore, this paragraph does not apply.

578 Radiation levels on the outer surface of the F-168 or F-168-X packages cannot exceed 2 mSv/h with a maximum load of 200 kCi.

Additional Requirements Relating to Transport by Post

579 – 580 The F-168 or F-168-X package is not shipped by post. Therefore, the requirements of these paragraphs do not apply.

4.14 Customs Operations

581 It is the responsibility of customs operations to ensure that any handling of the F-168 or F-168-X package is done using appropriate safeguards and that repackaging is done in accordance with the preparation for shipment procedures.

4.15 Undeliverable Consignments

582 The emergency response form included with the shipping documents (see Appendix 5) includes instructions for handling undeliverable consignments.

5. REQUIREMENTS FOR RADIOACTIVE MATERIALS AND FOR PACKAGINGS AND PACKAGES (SECTION VI)

In this section, it is demonstrated that the F-168 and F-168-X packages comply with the requirements of the IAEA TS-R-1, Regulations for the Safe Transport of Radioactive Materials, 1996 Edition (Revised) [1], Section VI – Requirements for Radioactive Materials and for Packagings and Packages.

The following paragraph numbers correspond to the relevant passages in the ST-1 1996 IAEA Regulations [1]. Where specific design requirements are not specified in detail, other recommendations, codes or standards are used and referenced throughout the text.

5.1 Requirements for Radioactive Materials

601 The contents of these packagings are not LSA-III solid material. Therefore, this paragraph does not apply.

602-604 When the contents of the F-168 or F-168-X are in Special Form, the requirements of these paragraphs are met.

605 The contents of the F-168 or F-168-X package are not designated low dispersible radioactive material. Therefore, this paragraph does not apply.

5.2 General Requirements for all Packagings and Packages

606 The F-168 or F-168-X packaging can be lifted by use of a platform truck (or equivalent) or by use of 2 out of the 6 lifting lug fins on the container (Dwg. F116802-002). The former method of lifting will not subject the container components to undue stresses that may be experienced by snatch lifting because of the nature of equipment used, hydraulic platform trucks and the large cross section of the package available for load distribution. The latter method has been analysed (see Appendix 8, Section 6.1). The analysis shows that the package can be safely lifted with "snatch" loads up to 3 G's (i.e. 3 times the weight of the F-168 package, 3 x 12,000 lbs. = 36,000 lbs.). See also Paragraph 607.

The F-168 and F-168-X packages have been designed so that they can be properly secured (tied-down) in or on the conveyance during transport. See Appendix 8, Section 6.2, for tie-down (securing) of F-168 and F-168-X packages onto conveyances for transport.

The attachments intended for tie-down (securing), during transportation, are 4 lift lug fins welded to the F-168 container. The lift lug components are:

1. The lift lug,
2. The cylindrical shell under the lift lug,
3. The weldment between the lift lug and the cylindrical shell, and
4. The reinforcing web (Dwg. F116802-045).

The loads applied to the eyebolts with the optional shipping skid attached are calculated using the method and conditions presented in the RDT Standard F-8-11T [14] for wire rope tie-down in Appendix 8, Section 6.2. In summary, using the RDT guidelines, it is calculated that;

With the Optional Shipping Skid

1. The cable tension will be 12,630 lbs. (combined).
2. The maximum stress in the lift lug (eye section) is 8,043 psi; the safety factor (defined as allowable stress (yield stress or UTS)/applied stress) is 4.5.
3. The maximum stress in the cylindrical shell of the container proper, under the lift lug, is 1,431 psi; the safety factor = 25.1.
4. The maximum stress in the weldment between the lift lug and the shell is 2,371 psi; the safety factor is 8.8, exclusive of stress concentration factor. With a stress concentration factor of 3, the safety factor is 2.9.

The above calculations were repeated with the optional shipping skid removed giving the following results;

Without the Optional Shipping Skid

1. The cable tension will be 11,616 lbs. (combined).
2. The maximum stress in the lift lug (eye section) is 7,489 psi; the safety factor (defined as allowable stress (yield stress or UTS)/applied stress) is 4.8.
3. The maximum stress in the cylindrical shell of the container proper, under the lift lug, is 1,377 psi; the safety factor = 26.1.
4. The maximum stress in the weldment between the lift lug and the shell is 2,064 psi; the safety factor is 10.2, exclusive of stress concentration factor. With a stress concentration factor of 3, the safety factor is 3.4.

In view of the above safety factors, the lift lug components are not expected to fail in the tie-down (securing) mode and the F-168 and F-168-X packages have been designed such that they can be;

1. easily and safely handled and transported, and
2. properly secured in or on the conveyance during transport.

607 The analysis of Appendix 8, Section 6.1, shows that the package can be safely lifted with "snatch" loads up to 3 G's (i.e. 3 times the weight of the F-168 package, 3 x 12,000 lbs. = 36,000 lbs.). In the following discussion, the safety factor is defined as the factor: allowable or yield stress or UTS/applied stress.

During the lifting of the F-168 or F-168-X package under "normal" load conditions (2 lift lugs), the weakest component is the eye of the lift lug under bearing failure consideration. Under these conditions, a safety factor of 5.8 exists.

During the lifting of the F-168 or F-168-X under "snatch" load conditions (2 lift lugs), the weakest component is the eye of the lift lug under bearing failure consideration. Under these conditions, a safety factor of 1.9 exists.

During the abnormal lifting of the F-168 or F-168-X under "snatch" load conditions (1 lift lug), the weakest component is the eye of the lift lug under pure tension consideration. Under these conditions, a safety factor of 1.1 exists.

During the "normal" and "snatch" lifting mode, the stresses in the lift lug of the F-168 or F-168-X are below the yield stress or 0.3 x UTS or 0.6 x Ultimate Tensile Stress (i.e. Ultimate Shear Stress).

In view of this, the structural integrity of the lift lug of the F-168 or F-168-X package is considered satisfactory.

608 The attachments on the F-168 or F-168-X which are intended for lifting the package are designed to support the whole weight of the flask. There is only one other appendage, which might be used mistakenly to lift the F-168 or F-168-X; this is a hole in the closure plug top lug for removing the plug during loading. This lifting lug is rendered inoperable for lifting during transport by blocking the hole with two large steel washers secured by a ½ inch steel bolt and nut, so that no shackle can be inserted, to lift the flask or closure during transport. The top shield cover, bolted to the flask, covers the top of the closure during transport, thereby making this plug lift lug inaccessible during transport.

609 The external surfaces of the package are all painted with a smooth finish, facilitating easy decontamination by normal "rinse and wipe" methods. There are no protruding features outside of the overall cylindrical flask fireshield, other than the skid which has larger square dimensions.

610 The package is designed for underwater loading. The outer layer of the packaging is all steel plate, with either outward sloping or vertical surfaces to drain easily. There are no wells or "dishes" in the surfaces, which could retain water.

611 The only additional features bolted to the package at the time of transport are the "tie-down system" (or other hardware). The "tie-down system" does not decrease the safety of the package during transport. The complete analysis of the tie-down system is given in Appendix 8 to satisfy the requirements of Paragraph 636 for securing the F-168 or F-168-X.

612 The F-168 or F-168-X package is capable of withstanding the effects of vibration and acceleration during normal road transport without deterioration in its effectiveness and integrity.

The fasteners used on the F-168 or F-168-X package are torqued as required in the Operating Specification in Appendix 2.

Based on the long term shipment history of the F-168 and F-168-X package, loosening or loss of bolt, nuts or other fasteners has not been a problem. MDS Nordion experience with this model and other similar designs, is comparable to that reported by Edling [10, 11]; i.e. "Containers have withstood years of transport with no occurrences of significant damage due to normal vibration."

In addition, the integrity of typical encapsulation (sealed source) designs has been proven either by actual test or by comparison, to withstand vibration effects of 90-500 Hz at 10G peak amplitude for 30 minutes (see Appendix 7). All of the sealed sources listed in the radioactive contents list (see section 2.4) have designs identical to or similar to those in Appendix 7 in regards to their ability to withstand the effects of transport specified in Paragraph 612.

613 The materials used in the construction of the package are listed in the Schedule of Materials (Table 5-1). These materials are physically and chemically compatible and their properties, with the exception of neoprene rubber, remain, for all practical purposes, constant under γ and β radiation.

The rubber gasket is in a region of relatively low radiation. Experience over the years has proven that the rubber does not noticeably degrade during use. The gasket is inspected and replaced if necessary during container inspection at MDS Nordion and prior to each shipment originating from MDS Nordion (see Appendix 2).

The requirements for maintenance and inspection of the F-168 and F-168-X packages are specified in the IN/DS 1811 F168 procedure (Appendix 2) to ensure that the packaging is maintained in accordance with the design specifications and regulatory requirements for safety during transport.

614 There are no pressure relief or other valves on the F-168 or F-168-X package.

615 The F-168 and F-168-X have been designed to withstand the ambient temperatures and pressures encountered during routine transport, as discussed in paragraphs 637, 643 and 660.

616 There are no other dangerous properties of the cobalt-60, antimony-124 or cesium-137 to be shipped in the F-168 or F-168-X package as per Paragraphs 109 and 507 of the Regulations [1].

617 When transported by air, the temperature of the accessible surfaces of the F-168 or F-168-X transport packages must not exceed 50°C at an ambient temperature of 38°C with no account taken for insolation.

The maximum accessible surface temperature is dependent on the curies contained within the package and can be estimated as follows;

With maximum contents, the maximum accessible surface temperature of the F-168 or F-168-X without a heat screen, at an ambient temperature of 38°C with no account taken for insolation is determined to be [redacted] (see Paragraph 662). The maximum contents that can currently be transported by air, however, is only 1200 TBq (32,432 Ci) as per Paragraph 416.

The expected maximum surface temperature for this load is; [redacted], which is below the 50°C temperature limit.

Therefore, when the F-168 or F-168-X package is loaded with the maximum contents that can currently be transported by air, its accessible surface temperature will not exceed 50°C.

618 See Paragraphs 637 and 643.

619 The F-168 or F-168-X has a containment system able to withstand without leakage a reduction in ambient pressure to 5 kPa, as discussed in paragraph 643.

620 The F-168 and F-168-X are not normally shipped as excepted packages unless empty. Nevertheless, they satisfy Paragraphs 606-616 and 617-619.

621-628 The F-168 or F-168-X package has been demonstrated to meet the requirements specified for Type B(U) packages, and all the additional basic requirements for Type B(U) packages. Additional specific requirements for Type B(U) packages are also met. It therefore exceeds all of the requirements specified in all of these paragraphs.

629-632 Since the F-168 or F-168-X does not contain uranium hexaflouride, these paragraphs do not apply.

5.3 Requirements for Type A Packages

633 See Paragraphs 606-619 and 634-649 in this section.

634 The smallest overall external dimension of the F-168 or F-168-X packaging is 101.3 cm; this is greater than the minimum requirement of 10 cm.

635 The main plug is fastened to the container body using qty = 8, 7/8-9 by 2 inch long, hex head, stainless steel bolts. The heads of two of the bolts are drilled and a lead wire seal is inserted through the holes as a tamper-evident seal (see Appendix 2). The wire seal must be destroyed in order to loosen these bolts and remove the closure plug, thereby providing obvious evidence that the package has been opened.

636 As discussed in paragraphs 606, 607 and 608, the tie-down attachments on the F-168 and F-168-X packages are designed to meet the requirements of the Regulations.

637 The F-168 and F-168-X packaging has been transporting radioactive cobalt-60 source capsules for over twenty years, exposed to all seasons of temperature and weather, via transport to and from MDS Nordion at Kanata, Ontario.

The primary materials of the package (steel, lead, neoprene and Kaowool) are compatible over the range of operating temperatures experienced. F-168 and F-168-X packages have been loaded with up to 200 kCi, and cooled down to outside winter temperatures without any adverse effects due to differential expansion and contraction (each packaging is inspected after each unloading at Kanata).

No degradation of the packaging functions has been reported. Routine maintenance, and replacement of gaskets, screws and repainting, which are all to be expected, has taken place and serves to preserve the ability of the packaging to perform its functions safely, over a long service life.

Experience has thus demonstrated that the many materials in the F-168 or F-168-X packaging can function compatibly, within the varied range of temperatures found between summer and winter in Ontario.

The mechanical properties of the materials at 70°C used in the F-168 or F-168-X package are listed in Table 5-2. The Charpy energy values, a measure of toughness of the material to prevent brittle fracture, at NDTT of –40 °F (–40 °C) or lower are also listed in Table 5-2.

In evaluating the performance of the package over the specified temperature range there are the following aspects to consider:

1. The integrity of the shielding after the regulatory tests is considered satisfactory since:

   a) the brittle fracture will not occur in the [redacted]. thick carbon steel jacket used in the construction. This is due to the size of the plastic stress zone at the tip of the potential crack, which, for brittle fracture to occur, exceeds the thickness of the material [15].

   b) even if the brittle fracture did occur, the shielding integrity would remain intact as no lead melt takes place during the subsequent thermal test (see thermal test analysis in Paragraph 656).

   The rationale for the above arguments is given below. See Figure 5-1 for the identification of the materials of the F-168 or F-168-X packaging.

   The entire packaging cavity, plug housing, top plate of the container and the closure bolts use austenitic stainless steel, which do not exhibit brittle fracture at temperatures down to –40°C. It is therefore concluded that, consistent with the drop tests results, there will be no loss of the shielding as a result of the drop test impact induced brittle fracture.

2. Integrity of the fireshield and shield cap with respect to brittle fracture:

   The fireshield and the shield cap is constructed from mild steel materials which are, in most parts, [redacted]. thick. As per Reference [15], mild steel of thickness up to 0.4 in. is not susceptible to brittle fracture.

   The fastening lugs of the fireshield are [redacted]. thick and made of mild steel. Once again there is sufficient redundancy to prevent total loss of all lugs in a brittle fracture related phenomenon.

3. Operational considerations:

   The brittle fracture of materials is a temperature-related phenomenon, among other factors. In general, the lower the temperature, the higher the susceptibility of the material to brittle fracture. To ensure against brittle fracture, materials were specified that are not susceptible to brittle fracture in the temperature range of –40°C to 70°C.

638 A list of F-168 and F-168-X packages manufactured and put in-service is given in Section 2. Transport packagings have been in service for more than 20 years.

The flask proper, the closure plug and the fireshield are fabricated in accordance with the MDS Nordion Design Specification in Appendix 2.

Standards

The weld standard CSA W59 was adopted and enforced at MDS Nordion (or her predecessors) in May, 1980. Prior to that date, welding was to good industrial practice, usually to American Welding Society Standards (AWS). The QA Standard CSA Z299.2 and Z299.3 were enforced at MDS Nordion (or her predecessors) in January, 1982. The following standards are directly applicable to the F-168 packaging design and manufacturing:

1. ASTM, AISI, SAE or equal for material specifications,
2. AWS Welding Standards,
3. ASME Codes,
4. CSA Standards.

Source Capsules

The manufacturing and inspection of MDS Nordion source capsules, listed in the Radioactive Material Type B(U) Package Design Approval Certificates in Appendix 1, is in accordance with the Quality Assurance documents in Appendix 4.

In general, the F-168 and F-168-X transport packaging and the sealed sources are designed and manufactured to National and International standards.

639 The containment is defined by the outermost envelope of double-encapsulated cobalt-60, antimony-124 or cesium-137 capsules. In addition, the capsules are placed within the inserts, pails, carriers and cages. The capsules are sealed by fusion welding, therefore, they cannot be opened unintentionally.

In Appendix 13 it is demonstrated that the C-188 containment will maintain its integrity under pressure in normal and accident conditions of transport. Appendix 13 also presents a similar assessment of Teletherapy and cesium-137 capsules.

In addition, all of the sealed sources used for transport have been subjected to ANSI/ISO or Special Form testing, as listed in Appendix 12, or are similar in design to those tested.

Furthermore, the capsules/inserts are enclosed within the flask by a closure shield plug and the fasteners. The closure shield plug is sealed and cannot be opened unintentionally (see Paragraph 612).

The plug bolts contain provision for the installation of a wire seal. The closure can only be opened intentionally and with the use of tools. The seal must be destroyed in order to remove the closure plug (see Appendix 2).

640 The sealed sources provide the containment, regardless of their Special Form status.

641 The outer sub-components surrounding the containment system are the container proper plus the shield plug. The containment system is defined as the outermost encapsulation of a source capsule. The source capsule forms a separate independent unit of the packaging. The outermost encapsulation of a source capsule is a fusion welded stainless steel assembly and is, therefore, considered to be closed by a positive fastening and meets the intent of Paragraph 641.

642 Radioactive liquids and gases are not shipped in this package. All active contents in the F-168 or F-168-X containment system are metal alloys, not vulnerable to chemical reduction or radiolysis.

643 **Effect of Containment**

The 1996 Regulations [1] have relaxed the pressure differential relative to the 1985 Regulations [3]. For the 1996 Regulations the containment system must retain its radioactive contents under a reduction of ambient pressure to 60 kPa, whereas in the 1985 Regulations the requirement was a reduction to 25 kPa.

The primary containment system is the outer envelope of double-encapsulated C-188 sealed sources. In Appendix 13 it is demonstrated that the C-188 containment will maintain its integrity under pressure in normal and accident conditions of transport. Appendix 13 also presents a similar assessment of Teletherapy and cesium-137 capsules.

In addition, all of the sealed sources used for transport have been subjected to ANSI/ISO or Special Form testing, as listed in Appendix 12, or are similar in design to those tested.

It is concluded that the containment system will retain its radioactive contents under a reduction in ambient pressure to 25 kPa. Therefore, the relaxed reduction to 60 kPa as specified in Paragraph 643 of the Regulations is also satisfied.

Effect on the Closure Plug

The resultant force (F1) acting on the closure plug, due to the pressure difference, (i.e. higher pressure inside the cavity), would be:

F1= ΔP x Plug area as defined by Gasket Reaction diameter
= [redacted].

where,

ΔP = 14.7 psi (atmospheric pressure) minus 8.7 psi (60 kPa).
G = gasket reaction diameter = [redacted].

The nominal weight of the closure plug is [redacted]. (Wplug). If the container were inverted, the total load on the plug screws would be:

F = F1 + Wplug
= [redacted].

The load F on each of the eight bolts is therefore, [redacted].

The closure plug is secured by eight [redacted] UNC bolts (of material ASTM A-193, Class 2, Grade B8), torqued to approximately [redacted] (Appendix 2).

The induced pre-load on each [redacted] UNC bolt, torqued to [redacted]. is:

$$Fi = \frac{T}{KD}$$

= [redacted].

Where K = 0.2 for unlubricated steel bolt heads in contact with a steel surface [20].

Based on the tensile stress area of the bolts of [redacted] the useable bolt strength (for 75% of yield strength) is:

$$F_p = \sigma A$$

= [redacted].

As the F_p [redacted] > F ([redacted].) and as the torque induced pre-load of Fi ([redacted].) > F ([redacted].), the closure plug bolted joint is maintained under a reduction in ambient pressure to 60 kPa.

644 There are no pressure relief or other valves on the F-168 or F-168-X package.

645 The radiation shield (the F-168 or F-168-X container proper) encloses the source capsule (part of the containment system).

The details of the closure shield plug and the containment system are described in Paragraphs 639 and 643, respectively.

646 The F-168 or F-168-X has not been subjected to all of the tests specified in Paragraph 719 to 724 for normal conditions of transport. The regulatory compliance for the F-168 or F-168-X is by way of:

1. tests for accident conditions and/or
2. calculations.

Paragraph 721 – Water Spray Test

Although the water spray test was not performed, the effects of such a test will not produce any adverse results. Specifically, the container proper is fabricated from a steel weldment which is lead filled. The closure plug is of a similar construction. It is bolted to the container proper and sealed with a neoprene rubber gasket. The fireshield, which encloses the container, is a metal assembly. By virtue of this construction, the container will resist the effects of this test, since the construction of the flask is such that water will not reach the containment area.

Since the F-168 and F-168-X are designed for underwater loading and unloading, the water spray test described in Paragraph 721 will not adversely affect the package integrity to retain the contents and prevent any increase in the maximum radiation level.

Paragraph 722 – Free Drop Test

Packages must be subjected to the free drop test to demonstrate the ability of the package to withstand normal conditions of transport.

The gross weight of the F-168 package is 5,445 kg (12,000 kg). The height of drop measured from the lowest point of the specimen to the upper surface of the target, as per Table XIII of the Regulations [1], shall be 0.9 meters. The 0.9 m free drop test was not conducted on the F-168/F-168-X packaging; however, three tests (one, 9.0 m free drop test and two, 1.0 m pin drop tests) were conducted on the F-168 #40 packaging (see Appendix 14). A 9.0 m free drop test (Paragraph 727(a)) is more severe than the 0.9 m free drop test (Paragraph 722).

It is concluded that a 0.9 m free drop test, although causing local deformation of the fireshield, will not impair the ability of the package to meet the intent of Paragraph 646, as the basic shielding integrity of the F-168/F-168-X packaging is not compromised.

Paragraph 723 – Compression Test

The packaging was not subjected to the compression test as per Paragraph 723. However, the package is assessed for a compressive load of 5 times the weight of the package.

The package is required to comply with the greater of the following compressive loads;

a) 5 * weight of the package = 5 * 5,445 kg = 27,225 kg (60,000 lbs.)
or

b) 1300 kg/m^2 * vertical projected area = 1300 * 1.88 m^2 = 2446 kg (5,380 lbs.)

It can be shown by calculation (see Appendix 13.6) that the package will survive the worst-case compressive load of 60,000 lbs. There are at least two structural members of the F-168/F-168-X package that resist the compressive load of 60,000 lbs.;

- The cylinder proper member #1 can withstand a critical buckling load of [redacted]. The safety factor, based on allowable load divided by applied load is 20.
- The skid channel member #2 is stressed to [redacted]. This stress is well below the yield stress of 36,000 psi for channel material ASTM A-36.

It is demonstrated that the structural integrity of the packaging, under the compression test, is maintained and the intent of Paragraph 723 is met.

Paragraph 724 – Penetration Test

The F-168/F-168-X packaging has not been subjected to the penetration test as per Paragraph 724. However, an assessment of the packaging under the penetration test has been made and presented in Appendix 13.7. It is found that provided the steel thickness is greater than 0.020 in., the steel member will resist puncture.

As the thickness of steel of the fireshield assembly is [redacted]., the fireshield assembly may be dented, but is unlikely to be punctured.

The arguments outlined in the preceding articles demonstrate that the intent of Paragraph 646 is satisfied for the F-168 or F-168-X packaging.

647- 648 The F-168 or F-168-X packaging is not used for shipping liquids.

649 The F-168 or F-168-X packaging is not used for gaseous radioactive material.

5.4 Requirements for Type B Packages

650 Refer to Paragraphs 606-619, 634-647 (except as noted in 646(a)), and, in addition, Paragraphs 651-664, as applicable.

651 The F-168 shipping container has been in use since 1960. No deterioration of the flask or its contents have been observed which would be traceable to heat generation.

The materials of the flask (steel and lead) are compatible over the range in temperature rises expected.

The flask has also been subjected to the fire test, described in Appendix 7, without observable damage to the cavity or the welds of the steel containment.

652 Surface temperatures of the F-168 and F-168-X can exceed 50°C in the absence of a heat screen, depending on the curie loading (see Paragraphs 617 and 662). When necessary, a heat screen will be employed, or the packages will be shipped exclusive use.

Appendix 11 presents the results of temperature measurements completed on F-168 S/N 96, loaded with 201,470 Ci of cobalt-60 on October 6, 1990. The focus of this test was to measure the temperatures of the accessible surface of the F-168 package, with a screen in place. Temperature measurements were carried out in a building (i.e. under shade conditions). [redacted]

[redacted].

653 – 654 The conditions of 38°C ambient and specified insolation data (Table XI of the Regulations [1]) have been assumed in applying Paragraphs 651 and 652 above.

- Ambient 38°C was assumed in Paragraphs 651 and 652.
- Insolation load from Table XI was assumed in Paragraph 651.

655 The F-168 or F-168-X packaging includes thermal protection for the purpose of satisfying the thermal test specified in Section VII, Paragraph 728 [1]. The thermal protection on the F-168/F-168-X has evolved over a time period between 1978 and 1982 (see Section 3 of Appendix 7 for details). Currently the cylindrical insulated fireshield, the top insulated fire cap, the vermiculite filled corner section and the insulated bottom of the package are designed to provide adequate thermal protection. The vermiculite and insulation are protected from ripping, cutting, skidding, abrasion and rough handling, commonly encountered in normal handling, transport and accidents, by covering them with the steel outer shell of the flask.

The mechanical and thermal tests for demonstrating ability to withstand accident conditions of transport (Paragraphs 726 and 728) are more severe than the tests for normal conditions of transport (Paragraphs 719-724). Actual test results have indicated that mere rolling and tumbling of the package, which could cause small dents and deformation of the thermal protection components, would not adversely affect the performance of the package.

656 There are three radioisotopes; cobalt-60, antimony-124, and cesium-137 which make up the radioactive contents of the sealed sources in the F-168 or F-168-X package. All of the sealed sources used for transport have been subjected to ANSI/ISO or Special Form testing, as listed in Appendix 12, or are similar in design to those that have been tested. It is concluded that all of the sources listed in Appendix 12 are leak tight and meet the requirements defined in Paragraph 656.

In addition to the leak-tightness of the radioactive sources, the cavity of the F-168 container is closed with a shielded lead plug, bolted tight.

Further, there is a fireshield surrounding the top of the shield plug. These additional barriers serve to reduce the loss of radioactive material from the cavity to the outside of the package.

As part of previous certification efforts to the 1985 Regulations [3], full-scale tests were completed. As there are no differences in test requirements between the 1985 and 1996 Regulations, the results are still applicable.

The packaging tests for demonstrating the ability to withstand accident conditions in transport are as follows;

a) 9.0 m drop test (Paragraph 727(a))

b) 1.0 m pin drop test (Paragraph 727(b))

c) dynamic crush test (Paragraph 727(c))

d) fire test 0.5 h at 800°C (Paragraph 728)

e) water immersion test (Paragraph 729)

Tests specified in Paragraphs 727(a), 727(b) and 728 have been performed. Test results are presented in Appendices 14, 15 and 16. In addition, the thermal test has been mathematically modelled two different ways and the results presented in Appendices 6 and 15.

Before the drop and thermal tests were conducted, assessment with respect to the "most damaging" drop test attitude was performed as presented in Appendix 14.

Paragraph 727(c) does not apply since the F-168 and F-168-X has a mass greater than 500 kg. The water immersion test of Paragraph 729 is discussed subsequently.

Paragraph 727 – Mechanical Tests

1. October17, 1978. F-168 S/N 40. Drop Tests at CRNL (One 9.0 m Free Drop and Two 1.0 m Pin Drops)

   The target for the 9.0 m drop consisted of a 4 in. thick steel plate placed on a reinforced concrete block (10 ft. x 10 ft. x 10 ft.) on the bedrock. Similarly, the target for the 1.0 m pin drop test was as above plus a CRNL 6 in. diameter pin was mounted on top of the steel plate.

For the first 1.0 m pin drop test the packaging was tested in a top inverted attitude (see Figure 5-3 for the drop test attitudes). The damage sustained by the F-168 S/N 40 packaging was as follows;

a) the flame deflector cap was dented and deformed, and

b) the flame deflector cap remained attached through all 4 fixtures.

For the 9.0 m free drop test, the packaging was tested in a top inverted edge attitude (see Figure 5-4 for the drop test attitudes). The damage sustained by the F-168 S/N 40 packaging was as follows;

a) the flame deflector crushed onto the fins,

b) the fins flattened onto the body,

c) cracks in the weld next to the lifting lug,

d) fractured circumferential weld over the vermiculite zone, and

e) fractured weld zone in the upper cone next to the lead, as found after the test.

For the second 1.0 m pin drop test, the packaging was tested in a bottom attitude (see Figure 5-3 for the drop test attitudes). The damage sustained by the F-168 S/N 40 packaging was as follows;

a) dent on bottom skid plate covering "transite" thermal insulation, and

b) lower cone weld fractured on side of pin.

The G-loads were as follows;

a) In top inverted attitude, 1.0 m pin drop test, the G-load is 50-100 g's range

b) In top inverted attitude, 9.0 free drop test, the G-load is 600-750 g's range.

The cumulative effect of the 1.0 m pin drop test and the 9.0 m free drop test resulted in;

a) failure of the lower weld of the top vermiculite zone, and

b) failure of the weld adjacent to, but not on, the drain line exit.

After the drop tests, the cylindrical fireshield remained attached. Furthermore, the top shield cap also remained attached, providing assured thermal protection in the thermal test to follow. The lead shielding was intact and the package was found to meet the requirements of Paragraph 656. See Appendix 14 for details.

2. February 24, 1981. F-168 S/N 13. Drop Tests at CRNL (Four 9.0 m Free Drops)

The purpose of these drop tests was two-fold;

a) to measure G-loads, and

b) to record the damage after each drop.

Four 9.0 m free drop tests were performed. The target consisted of a 4 in. thick plate attached to a reinforced concrete block (10 ft. x 10 ft. x 10 ft.) on the bedrock. The F-168 S/N 13 was tested in the top (inverted) edge, side #1, side #2 and bottom drop test attitudes (see Figure 5-4 for the drop test attitudes). See Appendix 14 for details.

The highest G-loads were recorded in a horizontal (side) drop attitude. These are:

a) 432 g's in the cavity, and

b) 1,100 g's outside the container.

After the test, the package was visually checked and a thorough examination of the F-168 S/N 13 was conducted by extensive sectioning of the container. The lead shielding was intact and the package was found to meet the requirements of Paragraph 656.

Paragraph 728 – Thermal Test

F-168 S/N 40 was subjected to a physical thermal test and thermal analysis (thermal test numerical simulation).

1. November 8, 1978. F-168 S/N 40. Fire Test at NRC.

   After the drop test of October 17, 1978, the packaging was preheated by NRC furnace burners to simulate gamma heat load, attributed to 200,000 Ci of cobalt-60. The furnace was controlled to the ASTM-E-119 fire curve for 31 minutes. The full description of the thermal test is given in Section 2 of Appendix 7.

   After the fire test, lead melt was discovered. The package was subjected to a radiation survey before the drop tests and after the fire test. There was no substantial increase in radiation levels (see Appendix 10). This confirms that, despite the fact there was lead melt, the radiation levels met the requirements of Paragraph 656.

   To avoid lead melt, the thermal protection was modified and the package qualified as described in the following section.

2. Thermal Simulations

   The F-168 was subjected to a series of thermal computer simulations as follows;

   a) Thermal Simulation using AECL-FA3 Software Program

   An in-house software program named AECL-FA3 was developed to handle the mathematical thermal modelling (see Section 4 of Appendix 7). The thermal test simulation plus the results are presented in Appendix 7.

   Three major steps were involved in this computer simulation, as follows;

   i) Validation of the software program AECL-FA3 with actual fire test results from the F-231 transport package.

   ii) Simulation of the actual thermal test to which F-168 S/N 40 was subjected. The extent to which the thermal protection was modelled reflected the test configuration, including;

   - an uninsulated cylindrical fireshield,
   - "transite" insulation at the bottom, and
   - excluding the top flame deflector cap.

   iii) Simulation of the F-168 subject to thermal test with the thermal protection as defined below.

   - 34 in. high insulated cylindrical fireshield,
   - "transite" insulation at the bottom, and
   - excluding the top flame deflector cap.

[redacted]

The insulated cylindrical fireshield that is currently used on F-168 and F-168-X transport packages is better than the one used for the thermal test simulation. In the thermal test simulation the insulated fireshield was only [redacted]. high. Currently, the actual F-168/F-168-X fireshield is [redacted] high (Dwg. F116805-002). This change assists, qualitatively, in lowering the lead temperature during the thermal test.

b) Thermal Simulation using ANSYS Finite Element Code

In the time since the F-168 submission to 1985 IAEA regulations [3], MDS Nordion developed a fire test model for other similar transport packages using the ANSYS finite element code. This fire test model was adapted to the F-168 package and used to validate the results from the previous simulation performed in a) above. The current F-168 package design, including the outer and top insulated fireshields, was also modelled and subjected to the IAEA thermal test conditions specified in Paragraph 728 of the Regulations [1].

A detailed report on this thermal simulation is included in Appendix 6. The highest temperature that the lead shielding reaches under the IAEA fire conditions was computed to be [redacted]. It is demonstrated that when the F-168 or F-168-X packaging is subjected to the IAEA thermal test requirements (Paragraph 728) that the lead shielding in the package will not melt. Therefore, the integrity of the F-168 or F-168-X package is sound.

Paragraph 729 – Water Immersion Test

The water immersion test has not been performed on the F-168 or F-168-X packaging. However, the packaging has been analysed to withstand the external pressure due to a 15 m head of water. This analysis is presented in Appendix 13.8. In addition, the operational record is excellent (the F-168 package is loaded or unloaded in a 30 ft (9 meter) deep water pool on a regular basis.

The presence of water within the package will not adversely affect the integrity of the package, in essence, for the same reasons as outlined in Paragraph 721. The water will not damage the flask nor the fireshield. In addition, the water that enters the cavity of the flask will not damage the encapsulated radioactive material.

The encapsulation of the source capsules in Appendix 3 have been demonstrated to withstand a minimum continuous external pressure of 300 psi (20.4 atm) either by test or comparison.

Summary

In summary, the cumulative effects of the drop and fire tests did not adversely affect the integrity of the package.

The radiation surveys in Appendix 10 and the post-test sectioning in Reference [18] show that sufficient shielding is retained to ensure that the radiation level at 1 m from the surface of the package would not exceed 10 mSv/h with the maximum radioactive contents which the package is designed to contain.

The arguments presented above demonstrate that during accident conditions of transport, sufficient shielding of the F-168 or F-168-X package will be retained such that the intent of Paragraph 656 is met.

657 Since the F-168 or F-168-X is intended to transport only a maximum of 200,000 Ci, this paragraph does not apply.

658 Compliance with the permitted activity release limits does not depend upon filters to prevent dispersal of the radioactive material, nor are there any mechanical cooling systems.

659 The package does not employ a pressure relief system.

660 The containment is defined by the outermost envelope of double encapsulated cobalt-60 source capsules C-188, C-151, C-132, et al.

In Appendix 13 it is demonstrated that the C-188 containment will maintain its integrity under pressure in normal and accident conditions of transport. Appendix 13 also presents a similar assessment of Teletherapy and cesium-137 capsules.

In addition, all of the sealed sources used for transport have been subjected to ANSI/ISO or Special Form testing, as listed in Appendix 12, or are similar in design to those tested.

In view of this, it is contended that the structural integrity of the outer tube assembly is maintained and the requirements of Paragraph 660 are met.

661 The regulatory allowable maximum normal operating pressure is 700 kPa (which is equal to 100 psig). As the maximum normal operating pressures in the C-188 sealed source, C-151 sealed source, other similar sealed sources, and the cavity of the F-168 are all below 100 psig (Appendix 13.3), the intent of Paragraph 661 is met.

662 The maximum accessible surface temperatures on the F-168 and F-168-X package with the heat screen in place are discussed in Paragraph 652. The maximum accessible surface temperatures on the F-168 and F-168-X package without a heat screen are discussed below and in Paragraph 617.

[redacted]. Therefore, the F-168 and F-168-X package complies with the intent of Paragraph 662.

663 The contents of the F-168 or F-168-X package are not designated low dispersible radioactive material. Therefore, this paragraph does not apply.

664 See Paragraphs 637 and 643.

5.5 Requirements for Type B(M) Packages

665-666 The F-168 or F-168-X package has been demonstrated to meet the requirements specified for Type A packages, and all the additional basic requirements for Type B(U) packages. It therefore exceeds all of the requirements for Type B(M) packages.

5.6 Requirements for Type C Packages

667-670 The F-168 and F-168-X packages are to be licensed as Type B(U) packages. Therefore, these paragraphs do not apply.

5.7 Requirements for Packages Containing Fissile Material

671-682 The F-168 and F-168-X packages do not contain fissile material. Therefore, these paragraphs do not apply.

Table 5-1: Schedule of Materials

[redacted]	[redacted]	[redacted]	[redacted]	[redacted]
[redacted]				
[redacted]	[redacted]	[redacted]	[redacted]	[redacted]
[redacted]	[redacted]	[redacted]	[redacted]	[redacted]
[redacted]	[redacted]	[redacted]	[redacted]	[redacted]
[redacted]	[redacted]	[redacted]	[redacted]	[redacted]
[redacted]	[redacted]	[redacted]	[redacted]	[redacted]
[redacted]				
[redacted]	[redacted]	[redacted]	[redacted]	[redacted]
[redacted]				
[redacted]	[redacted]	[redacted]	[redacted]	[redacted]
[redacted]	[redacted]	[redacted]	[redacted]	[redacted]
[redacted]	[redacted]	[redacted]	[redacted]	[redacted]
[redacted]				
[redacted]	[redacted]	[redacted]	[redacted]	[redacted]
[redacted]	[redacted]	[redacted]	[redacted]	[redacted]
[redacted]	[redacted]	[redacted]	[redacted]	[redacted]

* Properties at room temperature except where specified otherwise.

Table 5-2: Mechanical Properties of Materials Used in F-168 or F-168-X Packages From a Brittle Fracture View Point

[redacted]	[redacted]	[redacted]	[redacted]	[redacted]	[redacted]
[redacted]	[redacted]	[redacted]	[redacted]	[redacted]	[redacted]
[redacted]	[redacted]	[redacted]	[redacted]	[redacted]	[redacted]
[redacted]	[redacted]	[redacted]	[redacted]	[redacted]	[redacted]
[redacted]	[redacted]	[redacted]	[redacted]	[redacted]	[redacted]
[redacted]	[redacted]	[redacted]	[redacted]	[redacted]	[redacted]
[redacted]	[redacted]	[redacted]	[redacted]	[redacted]	[redacted]
[redacted]	[redacted]	[redacted]	[redacted]	[redacted]	[redacted]

Table 5-3: Average Temperature Distribution Measured on 12-14 October, 1990 on F-168 S/N 96 Package with Heat Screen

[redacted]	[redacted]	[redacted]
[redacted]	[redacted]	[redacted]
[redacted]	[redacted]	[redacted]
[redacted]	[redacted]	[redacted]
[redacted]	[redacted]	[redacted]
[redacted]	[redacted]	[redacted]
[redacted]	[redacted]	[redacted]
[redacted]	[redacted]	[redacted]
[redacted]	[redacted]	[redacted]
[redacted]	[redacted]	[redacted]
[redacted]	[redacted]	[redacted]
[redacted]	[redacted]	[redacted]
[redacted]	[redacted]	[redacted]
[redacted]	[redacted]	[redacted]
[redacted]	[redacted]	[redacted]
[redacted]	[redacted]	[redacted]
[redacted]	[redacted]	[redacted]

Note: Thermocouple Numbers 11-16 were not continually recorded.
See Figure 5-2 for Thermocouple locations.

Picture Removed

Figure 5-1: Materials of the F-168 or F-168-X Transport Package

Picture Removed

Figure 5-2: Thermocouple Locations for Test of 12-14 October, 1990
on F-168 S/N 96 Package with Heat Screen

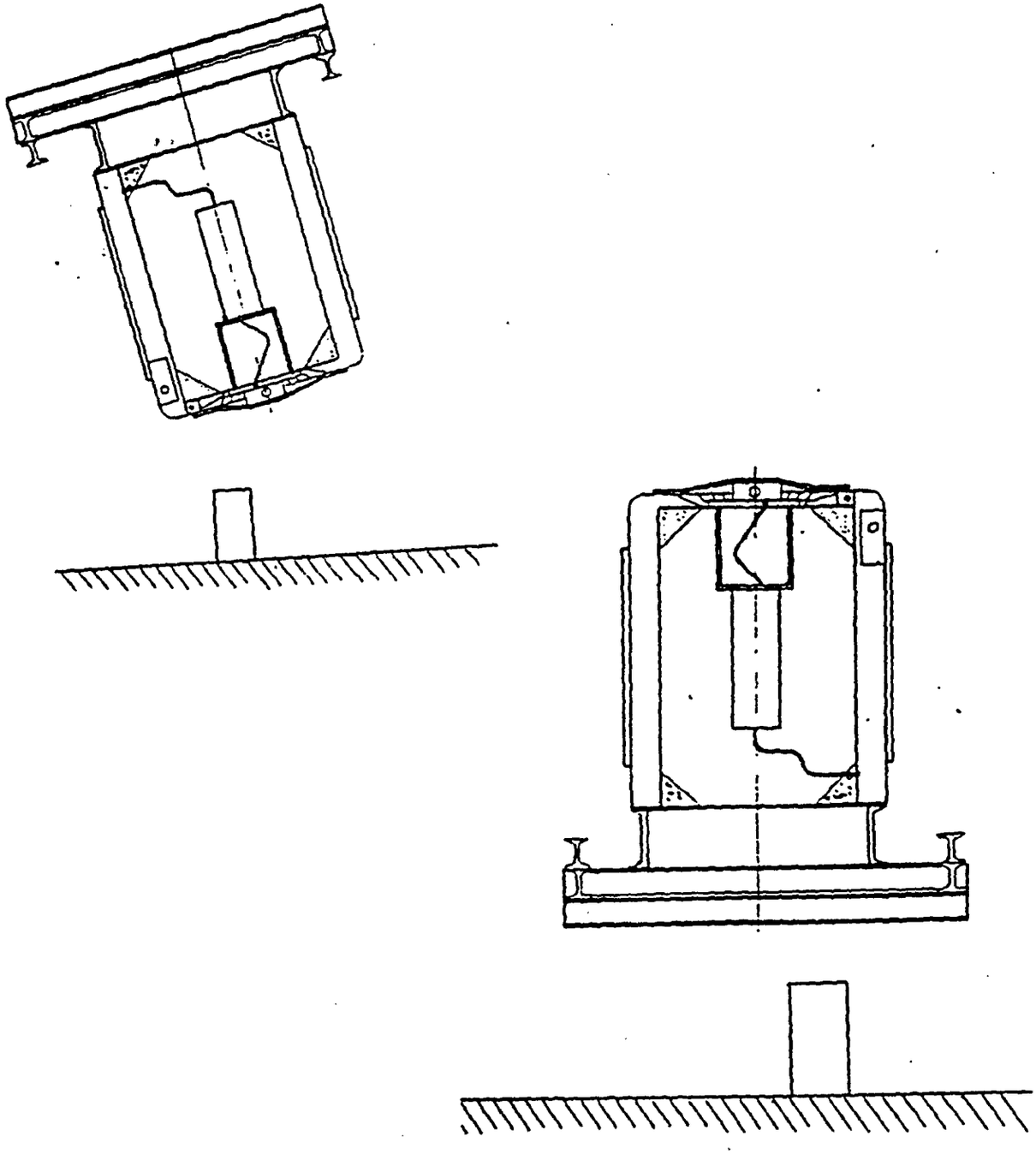

Figure 5-3: 1.0 m Pin Drop Test Attitudes for F-168 or F-168-X Transport Package

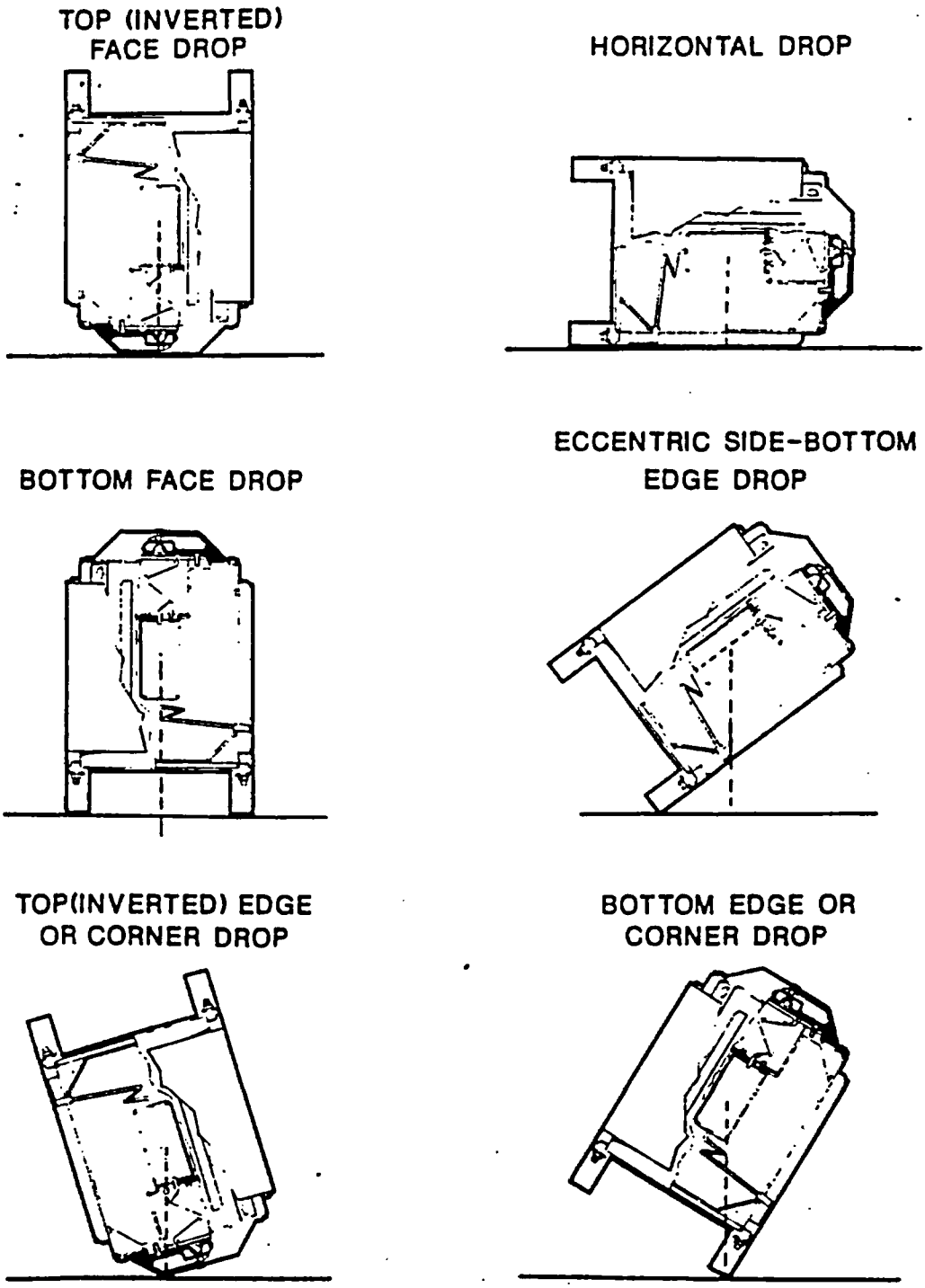

Figure 5-4: 9.0 m Free Drop Test Attitudes for F-168 or F-168-X Transport Package

6. TEST PROCEDURES (SECTION VII) AND APPROVAL AND ADMINISTRATIVE REQUIREMENTS (SECTION VIII)

In this section, it is demonstrated that the F-168 or F-168-X package complies with the requirements of the IAEA TS-R-1, Regulations for the Safe Transport of Radioactive Materials, 1996 Edition (Revised) [1], Section VI – Requirements for Radioactive Materials and for Packagings and Packages.

The following paragraph numbers correspond to the relevant passages in the ST-1 1996 IAEA Regulations [1]. Where specific design requirements are not specified in detail, other recommendations, codes or standards are used and referenced throughout the text.

6.1 Test Procedures (Section VII)

Demonstration of Compliance

701 Demonstration of compliance with the test requirements of Section VI of Reference [1] has been accomplished, for the F-168 or F-168-X, by a combination of the following methods:

a) Performance of tests with full-scale samples of the packaging, as normally presented for transport.

b) Reference to previous demonstrations of tests on other MDS Nordion shipping packages of similar shape, fabrication, size and weight.

c) No model testing was performed.

d) Calculation and reasoned argument, as presented in this report.

702 As previously discussed in this report, a thorough radiation survey of the F-168 S/N 40 was conducted, after it was subjected to the tests in Paragraphs 727 and 728. A thorough examination of the F-168 S/N 13 was conducted by extensive sectioning of the container, after it was subjected to the 9.0 m drop test specified in Paragraph 727. The requirements of Section VI, Paragraph 656 are demonstrated to be satisfied.

Test for LSA-III Material

703 The F-168 or F-168-X transport package is not being used to transport LSA material. Therefore, this paragraph does not apply.

Tests for Special Form Radioactive Material

704 – 711 MDS Nordion tests its Special Form sealed sources in accordance with Paragraphs 704 to 711, and they are certified by the CNSC to meet the Special Form Requirements of the Regulations.

Tests for Low Dispersible Radioactive Material

712 The contents of the F-168 or F-168-X package are not designated low dispersible radioactive material. Therefore, this paragraph does not apply.

Tests for Packages

Preparation of a Specimen for Testing

713 Appendix 14 describes the specimens used for the drop and fire testing.

714 The containment system is described in Section 2 and in Paragraph 639 of this report.

715 The external features of the F-168 or F-168-X specimen are clearly identified in Figure 2-1, for easy reference to terms.

Testing the Integrity of the Containment System and Shielding and Evaluating Criticality Safety

716 For requirements a) and b) of this paragraph, it has been demonstrated, by calculations and tests (see Appendices 12, 14, 15 and 16) that the containment and the lead shielding integrity will be maintained when the F-168 or F-168-X package is subjected to the tests in Paragraphs 719-729 of the Regulations [1] to the extent required by Section VI (Paragraph 656) for the F-168 or F-168-X packaging.

Requirement (c) of this paragraph is not applicable since the F-168 and F-168-X do not carry fissile material.

Target for Drop Tests

717 The target for the drop tests is a flat, horizontal surface, which meets the specification of the IAEA Advisory Material, Safety Series No. 37, Paragraph 618 [7].

A ten-foot, by ten foot, by ten-foot concrete block was set into the ground on bedrock. A four inch steel armor plate was fastened onto the top surface of the concrete block (CRNL Drawing #E-4511-2002), which was provision for mounting an impact target pin, required in Paragraph 727(b).

This offers a total mass (at 147 lb/ft^3 concrete density and 489 lb/ft^3 steel density) of 163,300 lb. mass, which is approximately 13.6 times the mass of the F-168 or F-168-X at 12,000 lb. If the bedrock is considered to add to this mass, being extremely stiff as a solid foundation, then the mass ratio is significantly greater than 10.

Test for Demonstrating Ability to Withstand Normal Conditions of Transport

719-724 The water spray test, the 0.9 m free drop test, the stacking test and the penetration test have not been performed on the F-168 or F-168-X package. Its design and intended use can be used to evaluate its performance and integrity, by reference to the tests for accident conditions (Paragraphs 727 and 728) which were carried out on F-168 packages and by calculation and reasoned argument (see Paragraph 646).

Additional Test for Type A Packages Designed for Liquids and Gases

725 The F-168 or F-168-X package is a Type B packaging and is exempted from these paragraphs because it will not carry liquids and/or gases.

Tests for Demonstrating Ability to Withstand Accident Conditions in Transport

726-728 The F-168 packaging was subjected to the cumulative effects of the mechanical drop test in Paragraph 727 and the thermal test in Paragraph 728, in that order.

The Type B Mechanical Tests (Paragraph 727) and the ½ hour thermal test (Paragraph 728) results for the F-168 packaging are presented in Appendices 14 and 15, respectively.

It is demonstrated, by analysis and tests, that the F-168 and F-168-X package will be able to withstand the tests in Paragraph 727 and 728, respectively (see Paragraph 656).

Water Immersion Test:

729 The F-168 or F-168-X specimen has not been actually immersed under a 15 m head of water for eight hours. However, the F-168 or F-168-X package has been assessed for the water immersion test as per Appendix 13.8. The F-168 or F-168-X package meets the requirements of Paragraph 629 [1].

Water Immersion Test for Packages Containing Irradiated Nuclear Fuel

730 The F-168 or F-168-X package does not transport irradiated nuclear fuel. Therefore, this paragraph does not apply.

Water Leakage Test for Packages Containing Fissile Material

731 - 733 The F-168 or F-168-X package does not carry fissile materials. Therefore, these paragraphs do not apply.

Tests for Type C Packages

734 - 737 The F-168 or F-168-X are to be licensed as Type B(U) packages. Therefore, these paragraphs do not apply.

6.2 Approval and Administrative Requirements (Section VII)

801-834 Section 8 addresses the approval and administrative requirements of the Regulations, and are not addressed herein.

7. CONCLUSIONS

In this report, analysis and comparison with similar packages has shown compliance with IAEA TS-R-1, Regulations for the Safe Transport of Radioactive Materials, 1996 Edition (Revised) [1]. It is submitted that the F-168 and F-168-X transport packagings, as defined in Sections 1 and 2 of this report, meet the requirements for B(U)-96 certification.

8. REFERENCES

1. IAEA. IAEA TS-R-1, Regulations for the Safe Transport of Radioactive Materials, 1996 Edition (Revised). Vienna. 2000.
2. Packaging and Transport of Nuclear Substances Regulations, SOR/DORS/2000-208. 31 May 2000.
3. IAEA SS6 Regulations for the Safe Transport of Radioactive Materials, 1985 Edition, Supplement 1988.
4. IAEA. IAEA Safety Series No. 9, "Basic Safety Standards for Radiation Protection", 1982 Edition. Vienna.
5. Browne, E., Firestone, R.B. John Wiley and Sons, Inc. "Tables of Radioactive Isotopes", New York. 1986.
6. No longer required.
7. IAEA. IAEA Safety Series No. 37, "Advisory Material for the IAEA Regulations for the Safe Transport of Radioactive Material (1985 Edition)", Third Edition (As Amended 1990). Vienna. 1990.

8. No longer required.
9. No longer required.
10. Don A. Edling et al. 'Certification of ERDA Contractors', Packagings with respect to Compliance with DOT Specification 7A Performance Requirements, MLM-2228 (Supplement 1), US Government contract No. E-33-1-GEN-53. April 1976.
11. D. A. Edling et al. 'Certification of ERDA Contractors', Packagings with respect to Compliance with DOT Specification 7A Performance Requirements, Phase II: Summary Report, MLM-2228, US Government contract No. AT-33-1-GEN-53. June 1975.
12. V.M. Faires. The Macmillan Company. "Design of Machine Elements", 4th Edition. 1965.
13. Lead Industries Association, "Lead in Modern Industry". New York City, New York. 1952.
14. ERDA. RDT Standard No. F-8-11T, Fuel Shipping container Tiedown for Truck Transport, Division of Reactor Research and Development, US. January 1975.
15. W.R.Holman and R.T. Longland. NUREG/CR-1815; UCRL-53013, "Recommendations for Protecting Against Failure by Brittle Fracture in Ferritic Steel Shipping Containers Up to Four Inches Thick".
16. ASM International Metal Handbook, Volume 1, Tenth Edition, Properties and Selection: Irons, Steels, and High-Performance Alloys.
17. American Welding Society (AWS) Welding Handbook, Section 4, Chapter 65.
18. No longer required.
19. No longer required.
20. Shigley, J.E. Mc-Graw-Hill Series in Mechanical Engineering. "Mechanical Engineering Design" New York. 1963.
21. Oscar J. Horner, Ed. McGraw-Hill, ASME Handbook "Metal Engineering Design".
22. W.C. Rion, Jr. Ed. DuPont. "Stainless Steel Information manual for the Savannah River Plant" DP-860, Vol. 1.
23. Baumeister, T., Avallone, A., Baumeister III, T., Ed. McGraw-Hill Book Company. "Mark's Standard Handbook for Mechanical Engineers" 8th Edition. New York. 1978.
24. Britannia Refined Metals Ltd. Kent DA11 9BG, IK, 'The Properties of Lead and its Alloys," www.brm.co.uk/lead/properties.htm. August 2002.
25. John Mansville Corporation. Transite Catalogue.
26. Babcock & Wilcox, Refractories Division. 'Kaowool Ceramic Fibre Product Catalog."
27. The Vermiculite Association, Whitegate Acre, Metheringham Fen, Lincoln, LN4 3A1, UK, www.vermiculite.org/properties.htm, August, 2002.

APPENDIX 1:
Current Competent Authority Certificates

1. CDN/2063/B(U)-85, Rev. 5
2. CDN/2064/B(U)-85, Rev. 3

Certification

Atomic Energy Control Board | Commission de contrôle de l'énergie atomique

RADIOACTIVE MATERIAL TYPE B(U) PACKAGE DESIGN APPROVAL CERTIFICATE NO. CDN/2063/B(U)-85, (REV. 5)

30-A2-94-0 March 1, 2000

The Atomic Energy Control Board hereby certifies that the package, as described below, has been demonstrated to meet the regulatory requirements prescribed for Type B(U) packages as described in the Canadian *Transport Packaging of Radioactive Materials Regulations* and in the IAEA Regulations[1], subject to the following limitations, terms and conditions.

All users of this authorization shall register their identity in writing with the Atomic Energy Control Board prior to the first use of this authorization and shall certify that they possess the necessary instructions for preparation of the package for shipment.

This certificate does not relieve the shipper from any requirement of the government of any country through or into which the package will be transported.

PACKAGE IDENTIFICATION

MDS Nordion Inc., F-168 (1985) Transport Package, Serial Numbers 53 to 76 inclusive; 83 and up.

PACKAGING DESCRIPTION

The F-168 packaging, as shown on MDS Nordion Drawing Nos. F116801-001, (Rev. L) and F116801-020, (Rev. D), consists of a lead filled (266 mm lead shielding) steel encased right cylinder with external fins, insulated steel flame shields on the top and side, steel covered insulation on the bottom and an optional heat screen on the top. The package is permanently mounted on a structural steel base. The dimensions are 1013 mm diameter by 1659 mm high, including the removable shipping skid. The gross weight is maximum 5445 kg. The containment system is the source assembly.

An illustration of the package is shown on attached Drawing No. F-168 (1985), (Rev. 4).

This package shall bear the competent authority identification mark "CDN/2063/B(U)-85".

Nomenclature

1. Pare-feu supérieur
2. Écran thermique
3. Supports du pare-feu supérieur (4)
4. Plaque de mise en garde contre les rayonnements (2)
5. Plaque d'identification MDS Nordion (2)
6. Pare-feu (amovible) construction laminée: 2 x 1/4 po. (6,3 mm) acier + 1 po. (25,4 mm) Kaowool, diamètre externe 39,88 po. (1013 mm)
7. Plaque d'avertissement "ATTENTION - A CAUSE DE LA CHALEUR LIBÉRÉE, NE PAS ENTREPOSER DANS UN CONTENEUR ISOLÉ OU RÉFRIGÉRÉ NI DANS UN LOCAL ISOLÉ" (2)
8. Transite entouré d'acier
9. Garniture de vermiculite
10. Joint en néoprène
11. Boulon hex. de 7/8 -9 x 2 po. de longueur (8)
12. Plomb
13. Bouchon de tuyau de 3/8 po. NPT (2)
14. Patte de levage du bouchon
15. Tube d'évent
16. Bouchon
17. Cavité: 18,87 po. X 6,37 po. De diamètre (479 mm x 162 mm de diamètre)
18. Contenu radioactif et récipient
19. Tuyau de vidange
20. Boulon hex. 3/4 -10 x 2 po. Pour patin (4)
21. Patin amovible pour expédition, 54 po. (1372 mm) carré
22. Raccord et couvercle avec câble de canalisation d'écoulement et bouchon
23. Bouclier avec vis de 3/8 - 16 po. (3)
24. Étiquette de catégorie (2)
25. Boulon à oeil
26. Couvercle de boulon à oeil

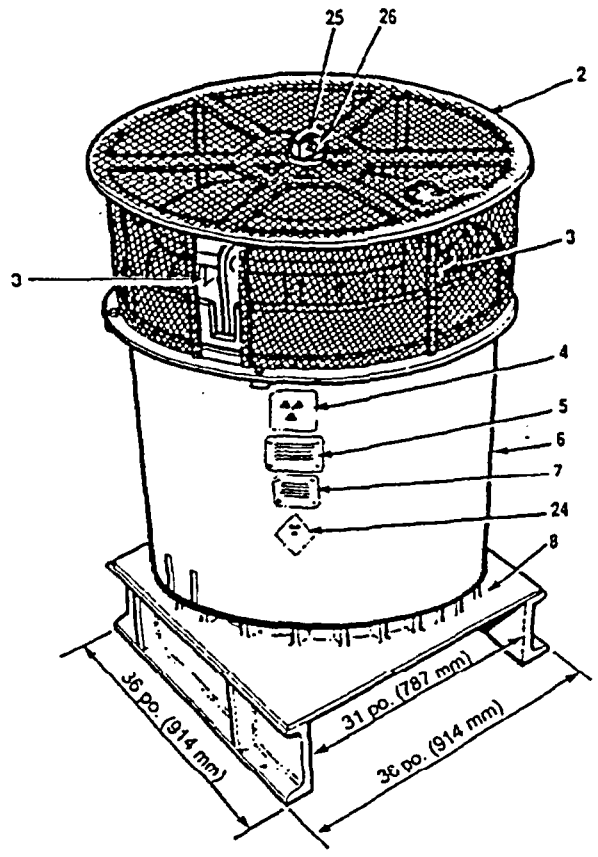

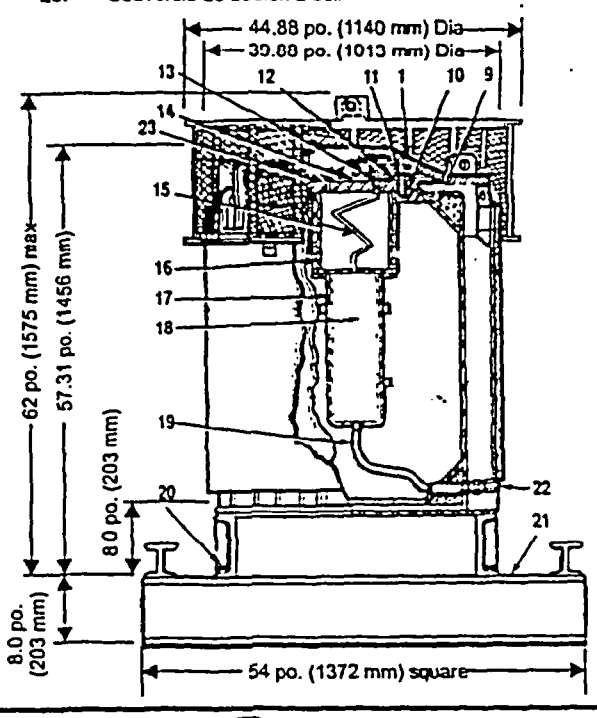

Notes

1. Certificat de la CCEA CDN/2063/B(U)-85
2. Conforme aux règlements du type B(U) de l'AIEA
3. Blindage en plomb: 10,5 po. (266 mm) entouré d'acier
4. Poids brut: 12 000 lb (5445 kg)
5. Pois du bouchon: 390 lb (177 kg)
6. Charge projetée: 593 lb/ft^2 (2900 kg/m^2)
7. Radionucléides approuvés:
   1. Cobalt-60
   2. Antimoine-124
   3. Césium-137
8. Les étiquettes peuvent être placées tel qu'illustré ou à 45° de l'illustration ci-dessus.
9. L'utilisation de l'écran thermique est réservé aux expéditions à utilisation non exclusive et par voie aérienne.

MDS Nordion

447 chemin March, C.P. 13500
Kanata, Ontario, Canada, K2K 1X8
Tél: (613) 592-2790 · Fax. (613) 592-6937

TITRE

Colis de transport F-168 (conforme aux réglements de 1985 de l'AIEA relatifs au transport)

DESSIN DE RÉFÉRENCE	IN/SS 1193 F168 (1985) F116801-001/F116801-020	RÉVISÉ Fev 2000	DCN A1684-D03-A
DATE	Avril 1992	No. F-168 (1985)	REV. 4
DESSINÉ PAR	VÉRIFIÉ PAR	APPROUVÉ PAR	FEUILLE 1 DE 1

CE DESSIN EST LA PROPRIÉTÉ DE MDS NORDION ; IL N'EST PRÉSENTÉ QU'À CONDITION QU'AUCUNE INFORMATION NE SOIT EXPLOITÉE SANS L'ACCORD ÉCRIT ET EXPLICITE DE MDS NORDION.

AUTHORIZED RADIOACTIVE CONTENTS

This package is authorized to contain not more than:

1.

Radionuclide	Max. Quantity TBq (curies)	Form	Max. Decay Heat (watts)	Encapsulation
Cobalt-60	7,400 (200,000)	metal pellets, metal wafers, metal slugs, stainless steel clad wire, aluminum clad cobalt slugs	3,200	C132, C133, C146, C151, C177, C185, C188, C189, C190, C198, C199, C200, C238, TC239, C246, C247, C248, C252, C306, C335, XC318, XC325
Cobalt-60	2,590 (70,000)	metal slug aluminum sheathed	1,070	C350 in F359 carrier
Cobalt-60	5,550 (150,000)	metal slug nickel plated	2,320	C351 in F179 carrier with central position empty
Antimony-124	1,850 (50,000)	cast metal	660	C232
Cesium-137	3,700 (100,000)	cesium chloride	522	Special Form with double encapsulation in stainless steel

Combination loading of the above materials is authorized provided that the sum of the ratios of loaded activity to authorized activity, for all material loaded, does not exceed 1.0; or

2. 7400 TBq of Cobalt-60 when contained in capsules of a design similar to the MDS Nordion C-188 and certified as special form and retained in the MDS Nordion F-234 or F-170 carrier.

ASSURANCE DE LA QUALITÉ

Le contrôle de la conception et de l'utilisation du colis doit être fait en accord avec la spécification n° IN/QA 0224 Z000 (3)[2], intitulé "Radioactive Material Transport Package Quality Plan" de MDS Nordion.

Le colis doit être inspecté et maintenu conformément à toutes les exigences prévues par le document n° IN/OP 0019 Z000 (10)[2] intitulé "Radioactive Material Transport Packaging Inspection and Maintenance Procedure", de MDS Nordion.

EXPÉDITION

Le colis doit être préparé pour l'expédition conformément aux spécifications n° IN/DS 0517 F168 (10) «Preparation for Shipment of the F-168 and F-168-X Transport Packagings» de MDS Nordion, le *Règlement sur l'emballage des matières radioactives destinées au transport* du Canada et le Règlement de l'AIEA[1].

Le flux thermique surfacique moyen du colis de 7 400 TBq de cobalt 60 est de 630 W/m^2. Dans le cas de flux thermiques dépassant 15 w/m^2, il faut prendre des dispositions supplémentaires avec le transporteur pour assurer une dissipation adéquate de la chaleur.

DATE D'EXPIRATION

Le présent certificat expire le 30 avril 2004.

Directeur,
Division de la réglementation
des matières nucléaires

R. Thomas

RÉFÉRENCES

[1] Agence internationale de l'énergie atomique, collection «Sécurité» n° 6, Règlement de transport des matières radioactives, édition de 1985 (revue en 1990).

[2] Ou la plus récente révision.

NOTES

1. Révision 0 : le 29 avril 1992. Certificat originale.
2. Révision 1 : le 23 octobre 1992. Révision à Dessin n° F-168 (1985) de Nordion.
3. Révision 2 : le 5 mars 1996. Renouvellement du certificat.
4. Révision 3 : le 8 janvier 1997. Révision du contenu radioactif authorisé.
5. Révision 4 : le 3 juin 1997. Erreur typographique corrigée.
6. Révision 5 : le 1er mars 2000. Révision et renouvellement du certificat.

QUALITY ASSURANCE

The design and use of this package shall be controlled in accordance with MDS Nordion Specification No. IN/QA 0224 Z000 (3)[2], "Radioactive Material Transport Package Quality Plan".

The package shall be inspected and maintained to the requirements set out in MDS Nordion Document No. IN/OP 0019 Z000 (10)[2], "Radioactive Material Transport Packaging Inspection and Maintenance Procedure".

SHIPMENT

This package shall be prepared for shipment in accordance with MDS Nordion Specification No. IN/DS 0517 F168 (10) "Preparation for Shipment of the F-168 and F-168-X Transport Packagings", the Canadian *Transport Packaging of Radioactive Materials Regulations* and the IAEA Regulations[1].

The average surface heat flux of the package with 7,400 TBq of cobalt-60 is 630 W/m^2. For heat fluxes exceeding 15 W/m^2 supplementary arrangements must be made with the carrier to ensure adequate heat dissipation.

EXPIRY DATE

This certificate expires April 30, 2004.

R. Thomas
Director
Materials Regulation Division

REFERENCES

[1] International Atomic Energy Agency Safety Series No. 6, Regulations for the Safe Transport of Radioactive Materials, 1985 Edition (As Amended 1990).

[2] Or latest current revision.

NOTES

1. Revision 0: April 29, 1992. Original certificate.
2. Revision 1: October 23, 1992. Revision to Nordion Drawing No. F-168 (1985).
3. Revision 2: March 5, 1996. Certificate renewed.
4. Revision 3: January 8, 1997. Authorized Radioactive Contents revised.
5. Revision 4: June 3, 1997. Corrected typographical error.
6. Revision 5: March 1, 2000. Certificate revised and renewed.

CONTENU RADIOACTIF AUTORISÉ

Le colis ne doit pas contenir plus des quantités maximales suivantes pour chaque radionucléide visé :

1.

Radionucléide	Quant. max. TBq (curies)	Forme	Max. Decay Heat (watts)	Encapsulation
cobalt-60	7 400 (200 000)	pastilles métalliques, plaquettes métalliques, bagues métalliques, fil revêtu d'acier inoxydable, bagues de cobalt revêtues d'aluminium	3 200	C132, C133, C146, C151, C177, C185, C188, C189, C190, C198, C199, C200, C238, TC239, C246, C247, C248, C252, C306, C335, XC318, XC325
cobalt-60	2 590 (70 000)	bagues métalliques revêtues d'aluminium	1 070	C350 dans un contenant F359
cobalt-60	5 550 (150 000)	bagues métalliques plaquées de nickel	2 320	C351dans un contenant F179 dont la partie centrale est vide
antimoine-124	1 850 (50 000)	métal coulé	660	C232
césium-137	3 700 (100 000)	chlorure de césium	522	«Forme spéciale» mis en double capsules en acier inoxydable

Le chargement combiné des matières susmentionnées est autorisé pourvu que la somme des proportions entre l'activité des matières chargées et l'activité autorisée pour toutes les matières chargées ne dépasse pas 1,0; ou

2. 7400 TBq de cobalt 60 contenu dans des capsules de conception similaire à la capsule C-188 de MDS Nordion, faisant l'objet d'un certificat de matière radioactives de forme spéciale, et placées dans un récipient F-234 ou F-170 de MDS Nordion.

Parts List

1. Upper Fireshield
2. Heat Screen
3. Retaining Brackets (4) for Upper Fireshield
4. Radiation Caution Plate (2)
5. MDS Nordion Identification Plate (2)
6. Fireshield (Removable) Laminated Construction:
   2 x 0.25 in. (6.3 mm) Steel + 1 in. (25.4 mm) Kaowool
   O.D. 39.88 in. (1013 mm)
7. Warning Plate "CAUTION - HEAT EMITTER - DO NOT STORE IN INSULATED OR REFRIGERATION CONTAINER OR INSULATED SPACE" (2)
8. Transite - Steel Encased
9. Vermiculite Packing
10. Gasket (Neoprene)
11. 7/8 -9 x 2 in. long Hex Bolt (8)
12. Wire Seal
13. 3/8 in. NPT Pipe Plug (2)
14. Plug Lift Lug
15. Vent Tube
16. Plug
17. Cavity: 18.87 in. x 6.37 in. Dia. (479 mm x 162 mm Dia.)
18. Radioactive Contents and Carrier
19. Drain Tube
20. 3/4 -10 x 2 in. Hex Bolt for Skid (4)
21. Removable Shipping Skid, 54 in. (1370 mm) square
22. Nipple and Drainline Cap
23. Shield Plate with 3/8 -16 Screws (3)
24. Category Label (2)
25. Eye Bolt
26. Eye Bolt Cover

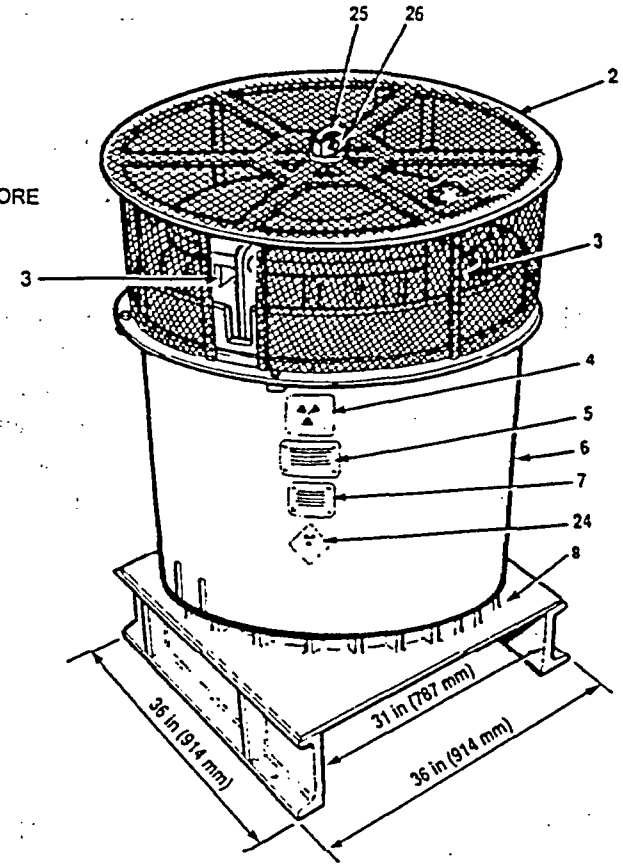

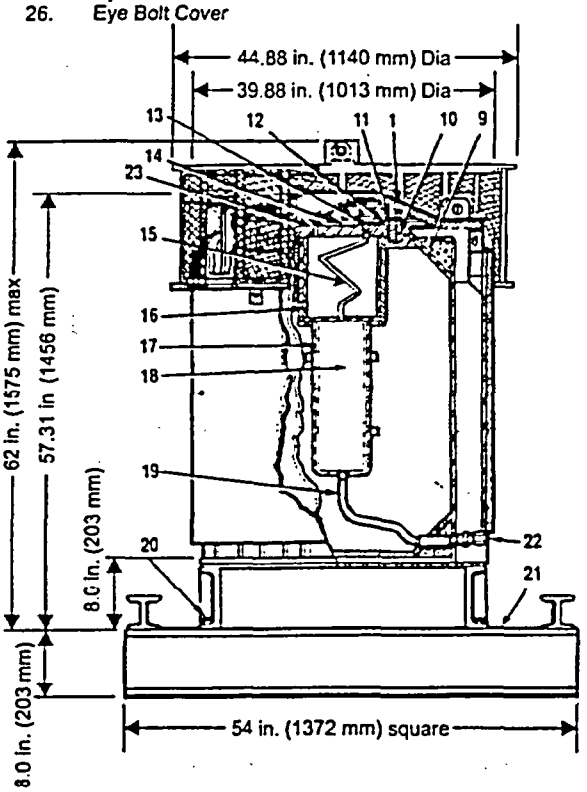

Notes

1. AECB Certificate CDN/2063/B(U)-85
2. Meets IAEA Type B(U) Requirements
3. Steel encased lead shielding: 10.5 in. (266 mm)
4. Gross Weight: 12,000 lb. (5445 kg)
5. Plug Weight: 390 lb. (177 kg)
6. Projected Floor Loading: 593 lb/ft^2 (2900 kg/m^2)
7. Radionuclides carried:
   1. Cobalt-60
   2. Antimony-124
   3. Cesium-137
8. Labels may be positioned as illustrated, or 45° to that shown
9. Heat screen used only for air and non-exclusive use shipments

MDS Nordion
447 March Road, P.O. Box 13500
Kanata, Ontario, Canada, K2K 1X8
Tel: (613) 592-2790 · Fax. (613) 592-6937

TITLE

F-168 Transport Package (To IAEA 1985 Transport Regulations)

REF.	IN/SS 1193 F168(1985) F116801-001/F116801-020	REVISED Feb 2000	DCN A1684-D03-A
DATE	April 1992	No. F-168 (1985)	ISSUE 4
DRAWN	CHECKED	APPROVED	SHEET 1 OF 1

THIS DRAWING IS THE PROPERTY OF MDS NORDION AND IS SUBMITTED FOR CONSIDERATION ON THE UNDERSTANDING THAT THERE SHALL BE NO EXPLOITATION OF ANY INFORMATION CONTINUED HEREIN EXCEPT WITH THE SPECIFIC WRITTEN AGREEMENT OF MDS NORDION.

Certification

Atomic Energy Control Board | Commission de contrôle de l'énergie atomique

CERTIFICAT N° CDN/2063/B(U)-85 (RÉV. 5) D'APPROBATION DE MODÈLE DE COLIS DE TYPE B(U) CONTENANT DES MATIÈRES RADIOACTIVES

30-A2-94-0 Le 1er mars 2000

La Commission de contrôle de l'énergie atomique certifie, par les présentes, que le colis décrit ci-dessous est réputé satisfaire aux exigences réglementaires visant les colis de type B(U) dans le *Règlement sur l'emballage des matières radioactives destinées au transport* du Canada et dans le Règlement de l'AIEA[1], sous réserve des restrictions et des conditions suivantes.

Toute personne qui voudrait l'utiliser pour la première fois doit s'inscrire par écrit auprès de la Commission de contrôle de l'énergie atomique et attester qu'elle possède les instructions nécessaires pour préparer le colis à l'expédition.

Le présent certificat ne dispense pas l'expéditeur d'observer les prescriptions établies par les autorités des pays sur le territoire desquels le colis sera transporté.

IDENTIFICATION DU COLIS

Colis de transport n° F-168 (1985) de MDS Nordion Inc., numéros de série 53 à 76 inclus; 83 et plus.

DESCRIPTION DE L'EMBALLAGE

L'emballage F-168 selon les dessin nos F116801-001 (rév. L) et F116801-020 (rév. D) de MDS Nordion comprend un cylindre droit en acier enfermant un blindage de plomb d'une épaisseur de 266 mm, muni d'ailettes extérieures, de pare-feu sur sa surface supérieure et latérale, un isolant couvert d'acier sur sa surface inférieure ainsi qu'un écran thermique optionel sur le dessus. Le colis est monté de façon permanente sur une structure d'acier. Les dimensions du colis sont de 1013 mm de diamètre sur 1659 mm de hauteur, y compris le patin d'expédition amovible. Le poids brut est 5445 kg maximum. L'assemblage de la source sert d'enveloppe de sécurité.

Le colis est illustré sur le dessin F-168 (1985), (rév. 4), ci-joint.

Le colis doit porter la marque d'identification «CDN/2063/B(U)-85» de l'autorité compétente.

Certification

Atomic Energy Control Board | Commission de contrôle de l'énergie atomique

RADIOACTIVE MATERIAL TYPE B(U) PACKAGE DESIGN APPROVAL CERTIFICATE NO. CDN/2064/B(U)-85, (REV. 3)

30-A2-94-1 March 1, 2000

The Atomic Energy Control Board hereby certifies that the package, as described below, has been demonstrated to meet the regulatory requirements prescribed for Type B(U) packages as described in the Canadian *Transport Packaging of Radioactive Materials Regulations* and in the IAEA Regulations[1], subject to the following limitations, terms and conditions.

All users of this authorization shall register their identity in writing with the Atomic Energy Control Board prior to the first use of this authorization and shall certify that they possess the necessary instructions for preparation of the package for shipment.

This certificate does not relieve the shipper from any requirement of the government of any country through or into which the package will be transported.

PACKAGE IDENTIFICATION

MDS Nordion Inc., F-168-X (1985), Shipping Flask Nos. 77-X, 78-X, 79-X, 80-X, 81-X and 82-X.

PACKAGE DESCRIPTION

The F-168-X package, as shown on MDS Nordion Drawing Nos. F116801-100, (Rev. F) and F116801-101, (Rev. J), consists of a lead filled (266 mm lead shielding) steel encased right cylinder with external fins, insulated steel flame shields on the top and side, steel covered insulation on the bottom. The package is permanently mounted on a structural steel base. The dimensions are 1013 mm diameter by 1659 mm high, including the removable shipping skid. The gross weight is 5445 kg. The containment system is the source assembly.

An illustration of the package is shown on attached Drawing No. F-168-X (1985), (Rev. 3).

This package shall bear the competent authority identification mark "CDN/2064/B(U)-85".

Nomenclature

1. Pare-feu supérieur
2. Orifices de ventilation
3. Supports du pare-feu supérieur (40
4. Plaque de mise en garde contre les rayonnements (2)
5. Plaque d'identification MDS Nordion (2)
6. Pare-feu (amovible) construction laminée:2 x 1/4 po. (6,3mm) acier + 1 po. (25,4 mm) Koawool. diamètre externe 39,88 po (1013 mm)
7. Plaque d'avertissement "ATTENTION - A CAUSE DE LA CHALEUR LIBÉRÉE NE PAS ENTREPOSER DANS UN CONTENEUR ISOLÉ OU RÉFRIGÉRÉ NI DANS UN LOCAL ISOLÉ" (2)
8. Transite - entouré d'acier
9. Garniture de vermiculite
10. Joint en néoprène
11. Boulon hex. de 7/8 - 9 x 2 po. de longueur (8)
12. Plomb
13. Bouchon de tuyau de 3/8 po. NPT (2)
14. Patte de levage du bouchon
15. Tube d'évent (scellé à la cavité)
16. Bouchon
17. Cavité: 18,87 po. x 6,37 po. de diamètre (479.4 mm x 162 mm de diamètre)
18. Contenu radioactif et récipient
19. Tuyau de vidange (scellé à la cavité)
20. Boulon hex. ¾ - 10 x 2 po. pour patin (4)
21. Patin amovible pour expédition, 54 po. (1370 mm) carré
22. Bouchon de tuyau standard (scellé)
23. Étiquette de catégorie (2)

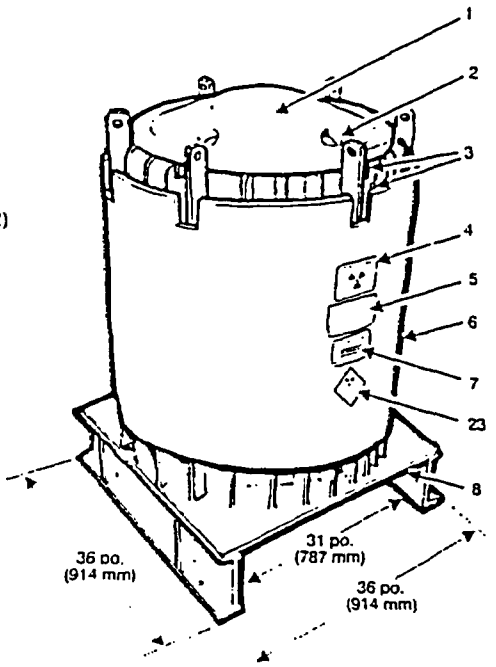

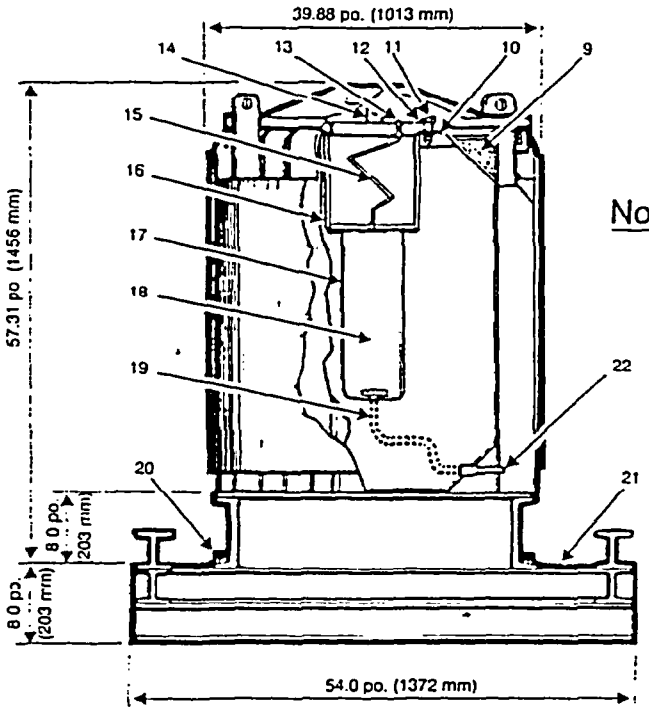

Notes

1. Certificat de la CCEA CDN/2064/B(U)-85
2. Conforme aux règlements du type B(U) de l'AIEA
3. Blindage en plomb: 10,5 po. (266 mm) entouré d'acier
4. Poids brut: 12 000 lb (5445 kg)
5. Pois du bouchon: 390 lb (177 kg)
6. Charge projetée: 593 lb/ft² (2900 kg/m²)
7. Radionucléides approuvés:
   1. Cobalt-60
8. Les étiquettes peuvent être placées tel qu'illustré ou à 45° de l'illustration ci-dessus

MDS Nordion
447 March Road, P.O. Box 13500
Kanata, Ontario, Canada, K2K 1X8
Tel: (613) 592-2790 · Fax. (613) 592-6937

TITRE
Colis de transport F-168-X (conforme aux réglements de 1985 de l'AIEA relatifs au transport)

DESSIN DE RÉFÉRENCE F116801-100 / F116801-101 INSS 1617 F168-X(1985) (1	REVISÉ Feb 2000	DCN A1684-D03-A	
DATE August 92		No. F-168-X (1985)	3
DESSINÉ PAR	VÉRIFIÉ PAR	APPROUVÉ PAR	FEUILLE 1 DE 1

CE DESSIN EST LA PROPRIÉTÉ DE MDS NORDION ; IL N'EST PRÉSENTÉ QU'À CONDITION QU'AUCUNE INFORMATION NE SOIT EXPLOITÉE SANS L'ACCORD ÉCRIT ET EXPLICITE DE MDS NORDION.

AUTHORIZED RADIOACTIVE CONTENTS

This package is authorized to contain not more than:

Radionuclide	Max. Quantity TBq (curies)	Form	Max. Decay Heat. watts	Encapsulation
Cobalt-60	7,400 (200,000)	metal pellets, metal wafers, metal slugs, stainless steel clad wire, aluminum clad cobalt slugs	3,200	C132, C133, C146, C151, C177, C185, C188, C189, C190, C198, C199, C200, C238, TC239, C246, C247, C248, C252, C306, C335, XC318, XC325, C348, AC191, AC195, AC345, AC339, welded stainless-steel capsules that meet the requirements of the International Organization of Standardization International Standard 2919 (First Edition) under classification number E53434, with the capsules retained within a holder that distributed them throughout the cavity volume.

QUALITY ASSURANCE

The design and use of this package shall be controlled in accordance with MDS Nordion Specification No. IN/QA 0224 Z000 (3)[2], "Radioactive Material Transport Package Quality Plan".

The package shall be inspected and maintained to the requirements set out in MDS Nordion Document No. IN/OP 0019 Z000 (10)[2], "Radioactive Material Transport Packaging Inspection and Maintenance Procedure".

EXPÉDITION

Le colis doit être préparé en vue de l'expédition conformément avec le document n° IN/DS 0517 F168 (10), "Preparation for Shipment of the F-168 and F-168-X Transport Packagings" de MDS Nordion, le *Règlement sur l'emballage des matières radioactives destinées au transport* du Canada et le Règlement de l'AIEA[1].

Le flux thermique surfacique moyen du colis de 7 400 TBq de cobalt 60 est de 630 W/m². Dans le cas de flux thermiques dépassant 15 W/m², il faut prendre des dispositions supplémentaires avec le convoyeur pour assurer une dissipation adéquate de la chaleur.

DATE D'EXPIRATION

Le présent certificat expire le 30 avril 2004.

Directeur,
Division de la réglementation
des matières nucléaires

R. Thomas

RÉFÉRENCES

[1] Agence internationale de l'énergie atomique, Règlement de transport des matières radioactives, collection «Sécurité» n° 6, édition de 1985 (Revue en 1990).

[2] Ou la plus récente révision.

NOTES

1. Révision 0 : le 21 octobre 1992. Premier certificat.
2. Révision 1 : le 19 juillet 1993. Ajout des colis, numéros de série 77-X et 81-X.
3. Révision 2 : le 18 mars 1996. Renouvellement du certificat.
4. Révision 3 : le 1er mars 2000. Révision et renouvellement du certificat.

SHIPMENT

The package shall be prepared for shipment in accordance with MDS Nordion Specification No. IN/DS 0517 F168 (10), "Preparation for Shipment of the F-168 and F-168-X Transport Packagings", the Canadian *Transport Packaging of Radioactive Materials Regulations* and the IAEA Regulations[1].

The average surface heat flux of the package with 7,400 TBq cobalt-60 is 630 W/m². For heat fluxes exceeding 15 W/m² supplementary arrangements must be made with the carrier to ensure adequate heat dissipation.

EXPIRY DATE

This certificate expires April 30, 2004.

R. Thomas
Director
Materials Regulation Division

REFERENCES

[1] International Atomic Energy Agency Safety Series No. 6, Regulations for the Safe Transport of Radioactive Material, 1985 Edition (As Amended 1990).

[2] Or latest current revision.

NOTES

1. Revision 0: October 21, 1992. Original certificate.
2. Revision 1: July 19, 1993. Package serial numbers 77-X and 81-X added.
3. Revision 2: March 18, 1996. Certificate renewed.
4. Revision 3: March 1, 2000. Certificate revised and renewed.

CONTENU RADIOACTIF AUTORISÉ

Le contenu du présent colis ne peut dépasser les quantités suivantes :

Radionucléide	Quant. max. TBq (curies)	Forme	Chaleur de désint. watts	Capsule
cobalt 60	7 400 (200 000)	pastilles métalliques, plaquettes métalliques, bagues métalliques, fil revêtu d'acier inoxydable, bagues de cobalt revêtues d'aluminium	3 200	C132, C133, C146, C151, C177, C185, C188, C189, C190, C198, C199, C200, C238, TC239, C246, C247, C248, C252, C306, C335, XC318, XC325, C348, AC191, AC195, AC345, AC339, des capsules soudées d'acier inoxydable qui satisfont aux exigences de la norme internationale n° 2919 (1ère édition) de l'Organisation internationale de normalisation, sous le numéro de classification n° E53434 et qui contiennent les capsules réparties dans des cavités à l'intérieur du porte-capsules.

ASSURANCE DE LA QUALITÉ

Le contrôle de la conception et de l'utilisation du colis doit être fait en accord avec la spécification n° IN/QA 0224 Z000 (3)[2], intitulé "Radioactive Material Transport Package Quality Plan" de MDS Nordion.

Le colis doit être inspecté et maintenu conformément à toutes les exigences prévues par le document n° IN/OP 0019 Z000 (10)[2] intitulé "Radioactive Material Transport Packaging Inspection and Maintenance Procedure", de MDS Nordion.

Parts List

1. Upper Fireshield
2. Holes for Ventilation
3. Retaining Brackets (4) for Upper Fireshield
4. Radiation Caution Plate (2)
5. MDS Nordion Identification Plate (2)
6. Fireshield (Removable) Laminated Construction: 2 x 0.25 in (6.3mm) Steel + 1 in (25.4 mm) Koawool. O.D. 39.88 in (1013 mm)
7. Warning Plate "CAUTION - HEAT EMITTER - DO NOT STORE IN INSULATED OR REFRIGERATION CONTAINER OR INSULATED SPACE" (2)
8. Transite - Steel Encased
9. Vermiculite Packing
10. Gasket (Neoprene)
11. 7/8 - 9 x 2 in long Hex Bolt (8)
12. Wire Seal
13. 3/8 in NPT Pipe Plug (2)
14. Plug Lift Lug
15. Vent Tube (sealed off at cavity)
16. Plug
17. Cavity: 18.87 in x 6.37 in Dia. (479.4 mm x 161.9 mm Dia.)
18. Radioactive Contents and Carrier
19. Drain tube (sealed off at cavity)
20. ¾ - 10 x 2 in Hex Bolt for Skid (4)
21. Removable Shipping Skid, 54 in (1370 mm) square
22. Standard Pipe Plug (sealed off)
23. Category Label (2)

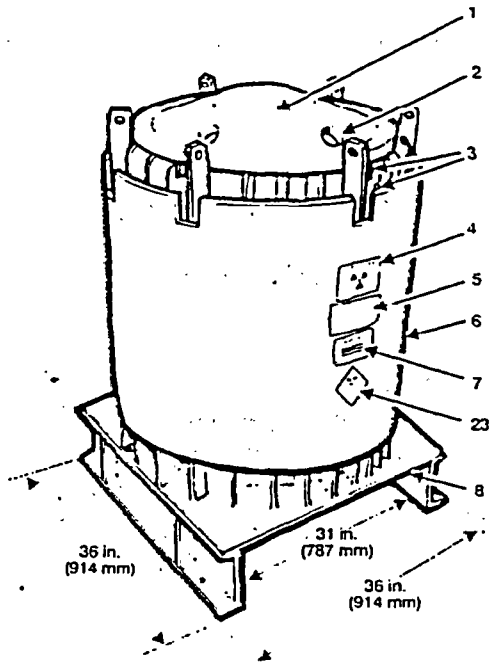

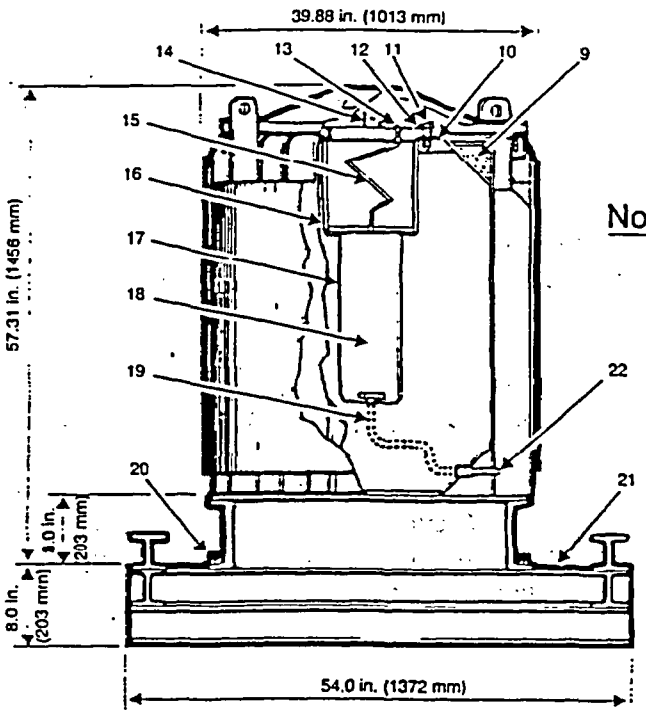

Notes

1. AECB Certificate CDN/2064/B(U)-85.
2. Meets IAEA Type B(U) Requirements
3. Steel encased lead shielding : 10.5 in (266 mm)
4. Gross Weight: 12,000 lb (5445 kg)
5. Plug Weight: 390 lb (177 kg)
6. Projected Floor Loading: 593 lb/ft² (2900 kg/m²)
7. Radionuclides carried:
   1. Cobalt-60
8. Labels may be positioned as illustrated, or 45° to that shown

MDS Nordion
447 March Road, P.O. Box 13500
Kanata, Ontario, Canada, K2K 1X8
Tel: (613) 592-2790 · Fax. (613) 592-6937

TITLE

F-168-X Transport Packaging (To IAEA 1985 Transport Regulations)

REF. F116801-100 / F116801-101 IN/SS 1617 F168-X(1985) (1)		REVISED Feb 2000	DCN A1684-D03-A
DATE August 92		No. F-168-X (1985)	ISSUE 3
DRAWN	CHECKED	APPROVED	SHEET 1 OF 1

THIS DRAWING IS THE PROPERTY OF MDS NORDION INC. AND IS SUBMITTED FOR CONSIDERATION ON THE UNDERSTANDING THAT THERE SHALL BE NO EXPLOITATION OF ANY INFORMATION CONTAINED HEREIN EXCEPT WITH THE SPECIFIC WRITTEN AGREEMENT OF MDS NORDION INC.

Certification

Atomic Energy Control Board | Commission de contrôle de l'énergie atomique

CERTIFICAT N° CDN/2064/B(U)-85 (RÉV. 3) D'APPROBATION DE MODÈLE DE COLIS DE TYPE B(U) CONTENANT DES MATIÈRES RADIOACTIVES

30-A2-94-1 le 1er mars 2000

La Commission de contrôle de l'énergie atomique certifie que le colis, tel que décrit ci-dessous, est réputé satisfaire aux exigences réglementaires visant les colis de Type B(U) dans le *Règlement l'emballage des matières radioactives destinées au transport* du Canada et dans le Règlement de l'AIEA[1], sous réserve des restrictions et des conditions suivantes.

Toute personne qui voudrait l'utiliser pour la première fois doit s'inscrire par écrit auprès de la Commission de contrôle de l'énergie atomique et attester qu'elle possède les instructions nécessaires pour préparer le colis à l'expédition.

Le présent certificat ne dispense pas l'expéditeur de toute exigence imposée par les autorités de tout pays étranger vers lequel ou à travers duquel le colis est transporté.

IDENTIFICATION DU COLIS

Modèles de châteaux de transport F-168-X (1985) de MDS Nordion Inc., nos 77-X, 78-X, 79-X, 80-X, 81-X and 82-X.

DESCRIPTION DE L'EMBALLAGE

L'emballage F-168-X tel qu'il figure dans le dessin nos F116801-100 (Rév. F) et F116801-101, (Rév. J) de MDS Nordion comprend un cylindre droit en acier enfermant un blindage de plomb d'une épaisseur de 266 mm, muni d'ailettes extérieures, de pare-feu sur sa surface supérieur et latérale, de même que d'un isolant couvert d'acier sur sa surface inférieure. Le colis est monté de façon permanente sur une structure d'acier. Les dimensions du colis sont de 1013 mm de diamètre sur 1659 mm de hauteur, y compris le patin d'expédition amovible. Le poids brut est 5445 kg maximum. L'assemblage de la source sert de système de confinement.

Une illustration du colis est montrée sur le dessin F-168-X (1985) (Rév. 3), ci-joint.

Le colis doit porter la marque d'identification «CDN/2064/B(U)-85» de l'autorité compétente.

APPENDIX 2:
Design, Manufacturing and Operating Specification

[redacted]

APPENDIX 3:
Sealed Source and Carrier Specification Sheets

IN/SS 1516 C132 (6)
IN/SS 1517 C133 (9)
C-146, Teletherapy Source Capsule (S)
C-151, Teletherapy Source Capsule (V)
IN/SS 1387 C177 (4)
C-185, Gammacell 220 Pencil (A)
IN/SS 1383 C188 (19)
C-189, Capsule Assembly (A)
C-190, Industrial Irradiator Source Element Assembly
IN/SS 1388 AC191 (6)
IN/SS 1393 AC195 (7)
IN/SS 1255 C198 (7)
C-199, Gammacell 200 Pencil (A)
C-200, Gammacell 200 Pencil (A)
C-232, Antimony 124 Source Capsule Assembly
C-238, GC210 Pencil
TC239, Welded Bulk Shipping Capsule (B)
IN/SS 1386 C246 (5)
C-247, Small Diameter Coil Source
C-252, G.B.650 Pneumatic Capsule Assembly
IN/SS 1385 C306 (2)
XC-325, Teletherapy Source Capsule (G)
IN/SS 1391 AC339 (3)
IN/SS 1392 AC345 (3)
IN/SS 1390 C348 (2)
IN/SS 1729 C442 (3)
ISO-1000, Sealed Cesium-137 Source (2)
F-170, Source Capsule Cage for F-168 Shipping Container (B)
IN/SS 1240 F180 (4)
IN/SS 1239 F234 (2)

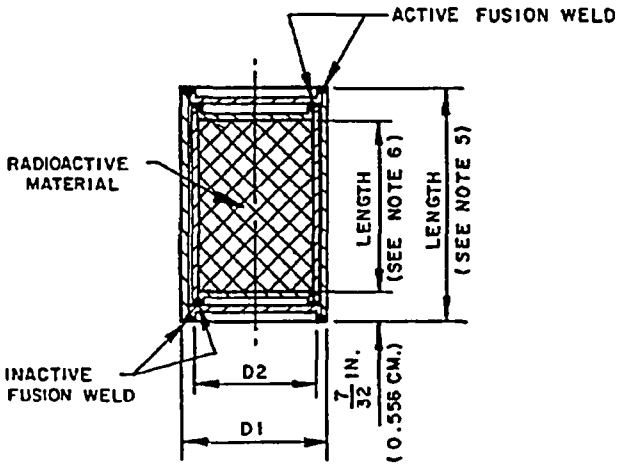

TYPE	STANDARD SIZES			
	D1 OUTSIDE DIAMETER		D2 RADIOACTIVE MT'L.DIA.	
	IN.	CM.	IN.	CM.
52	0.250	0.635	0.130	0.33
54	0.280	0.711	0.165	0.42
56	0.315	0.800	0.200	0.51
58	0.350	0.890	0.230	0.58
60	0.380	0.965	0.265	0.67
62	0.420	1.066	0.300	0.76
64	0.445	1.130	0.330	0.84
66	0.515	1.308	0.395	1.00
68	0.620	1.574	0.500	1.27
70	0.720	1.828	0.600	1.52
72	0.790	2.006	0.670	1.70
74	0.920	2.336	0.800	2.03
76	1.104	2.804	0.984	2.50
78	1.174	2.982	1.054	2.68
80	1.224	3.109	1.104	2.80
82	1.294	3.287	1.174	2.98

Notes

1. Material - Stainless Steel Type 316L.
2. Capsule walls 0.064 cm (0.025 in) thick.
3. Dimensions shown are at 20°C (68°F).
4. Engraving on capsule:
   MDSN
   Co60D
   Serial No.
   Trefoil or Radioactive
5. Max. active length = O/L minus 1.118 cm (0.440 in).
6. Allow +0.012 cm (0.005 in) tolerance on outside diameter in weld area.

MDS Nordion
447 March Road, P.O. Box 13500
Kanata, Ontario, Canada, K2K 1X8
Tel: (613) 592-2790 · Fax. (613) 592-6937

THIS DRAWING IS THE PROPERTY OF MDS NORDION INC. AND IS SUBMITTED FOR CONSIDERATION ON THE UNDERSTANDING THAT THERE SHALL BE NO EXPLOITATION OF ANY INFORMATION CONTAINED HEREIN EXCEPT WITH THE SPECIFIC WRITTEN AGREEMENT OF MDS NORDION INC.

TITLE
C-132 Double Encapsulated Sealed Source

REF. IN/SS 1516 C132 DWG. A02353		REVISED MAY 01	DCN A1413-D-01A
DATE FEB. 29, 1968		No. C-132	ISSUE 6
DRAWN BW	CHECKED	APPROVED ML	SHEET 1 OF 1

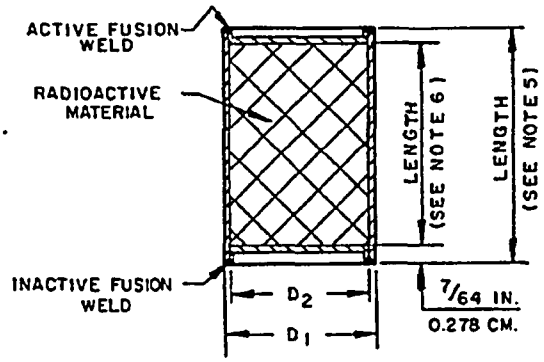

TYPE	STANDARD SIZES			
	D1 OUTSIDE DIAMETER		D2 RADIOACTIVE MT'L DIA.	
	IN.	CM.	IN.	CM.
1	0.180	0.457	0.130	0.330
2	0.215	0.546	0.165	0.419
3	0.250	0.635	0.200	0.508
4	0.280	0.711	0.230	0.584
5	0.315	0.800	0.265	0.673
6	0.350	0.889	0.300	0.762
7	0.380	0.966	0.330	0.838
8	0.420	1.067	0.370	0.940
9	0.445	1.130	0.395	1.003
10	0.515	1.308	0.465	1.181
11	0.550	1.397	0.500	1.270
12	0.620	1.575	0.570	1.448
13	0.650	1.651	0.600	1.524
14	0.720	1.829	0.670	1.702
15	0.850	2.159	0.800	2.032
16	0.920	2.337	0.870	2.210
17	1.034	2.626	0.984	2.500
18	1.104	2.804	1.054	2.677
19	1.154	2.931	1.104	2.804
20	1.224	3.109	1.174	2.982
21	1.294	3.287	1.224	3.109
22	0.332	0.843	0.282	0.716
23	0.430	1.092	0.380	0.965
24	0.437	1.110	0.387	0.983
25	0.529	1.344	0.479	1.217
26	0.627	1.593	0.577	1.466
27	0.790	2.007	0.740	1.880
28	0.809	2.055	0.759	1.928
29	1.006	2.555	0.956	2.428
30	1.174	2.982	1.124	2.855
31	1.254	3.185	1.204	3.058

Notes

1. Material - Stainless Steel Type 316L.
2. Capsule walls 0.064 cm (0.025 in) thick.
3. Dimensions shown are at 20°C (68°F).
4. Engraving on capsule:
   MDSN
   Co60E
   Serial No.
5. Max. active length = O/L minus 0.584 cm (0.230 in).
6. Allow +0.012 cm (0.005 in) tolerance on outside diameter in weld areas.

MDS Nordion
447 March Road, P.O. Box 13500
Kanata, Ontario, Canada, K2K 1X8
Tel: (613) 592-2790 · Fax. (613) 592-6937

THIS DRAWING IS THE PROPERTY OF MDS NORDION INC. AND IS SUBMITTED FOR CONSIDERATION ON THE UNDERSTANDING THAT THERE SHALL BE NO EXPLOITATION OF ANY INFORMATION CONTAINED HEREIN EXCEPT WITH THE SPECIFIC WRITTEN AGREEMENT OF MDS NORDION INC.

TITLE
C-133 Single Encapsulated Sealed Source

REF. IN/SS 1517 C133 DWG A02404		REVISED MAY 01	DCN A1413-D-01A
DATE MARCH 19, 1968		No. C-133	ISSUE 9
DRAWN BW	CHECKED N	APPROVED ML	SHEET 1 OF 1

CAPSULE SPECIFICATIONS
(ENGRAVED ON TOP CAP)

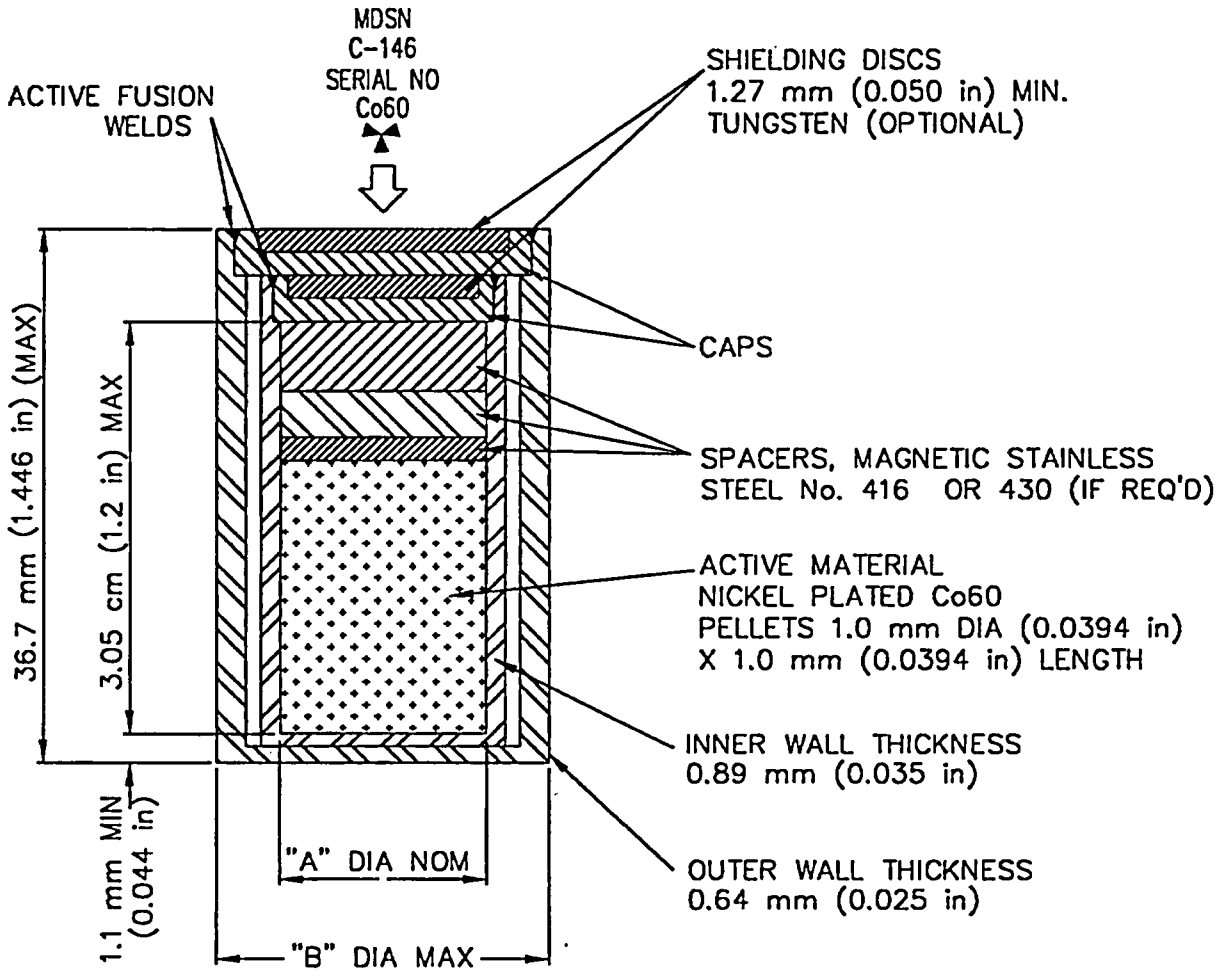

TYPE	"A" DIA (SOURCE) NOMINAL cm	in	"B" DIA O.D. MAX cm	in
1.50	1.50	0.591	1.83	0.722
2.0	2.0	0.787	2.34	0.922

NOTES:
1. CAPSULE MATERIAL NO. 316L STAINLESS STEEL UNLESS OTHERWISE SPECIFIED.
2. MINIMUM ACTIVE LOADING HEIGHT 1.5 cm (0.58 in).
3. DIMENSIONS SHOWN ARE AT 20°C (68°F).
4. NOMINAL PACKING DENSITY OF RADIOACTIVE PELLETS 5.78 g/cm^3
5. "A" DIA. (SOURCE) NOMINAL AND "B" DIA. O.D.MAX SHOWN ONLY FOR TWO CAPSULE TYPES. FOR OTHER CAPSULE TYPES REFER TO DWG A03038

MDS Nordion
447 MARCH RD.
KANATA ONTARIO CANADA K2K 1X8

TITLE
TELETHERAPY SOURCE CAPSULE

REF DWG: A03038 | REVISED: MAR 2000

THIS DRAWING IS THE PROPERTY OF MDS NORDION INCORPORATED, AND IS SUBMITTED FOR CONSIDERATION ON THE UNDERSTANDING THAT THERE SHALL BE NO EXPLOITATION OF ANY INFORMATION CONTAINED HEREIN EXCEPT WITH THE SPECIFIC WRITTEN AGREEMENT OF MDS NORDION INCORPORATED.

DATE: JUNE 4, 1992			No.	REV
DRAWN	CHECKED	APPROVED	C-146	S
DMI	D.W.	A.S.T.	SHT 1 OF 1	

CAPSULE SPECIFICATIONS
(ENGRAVED ON TOP CAP)

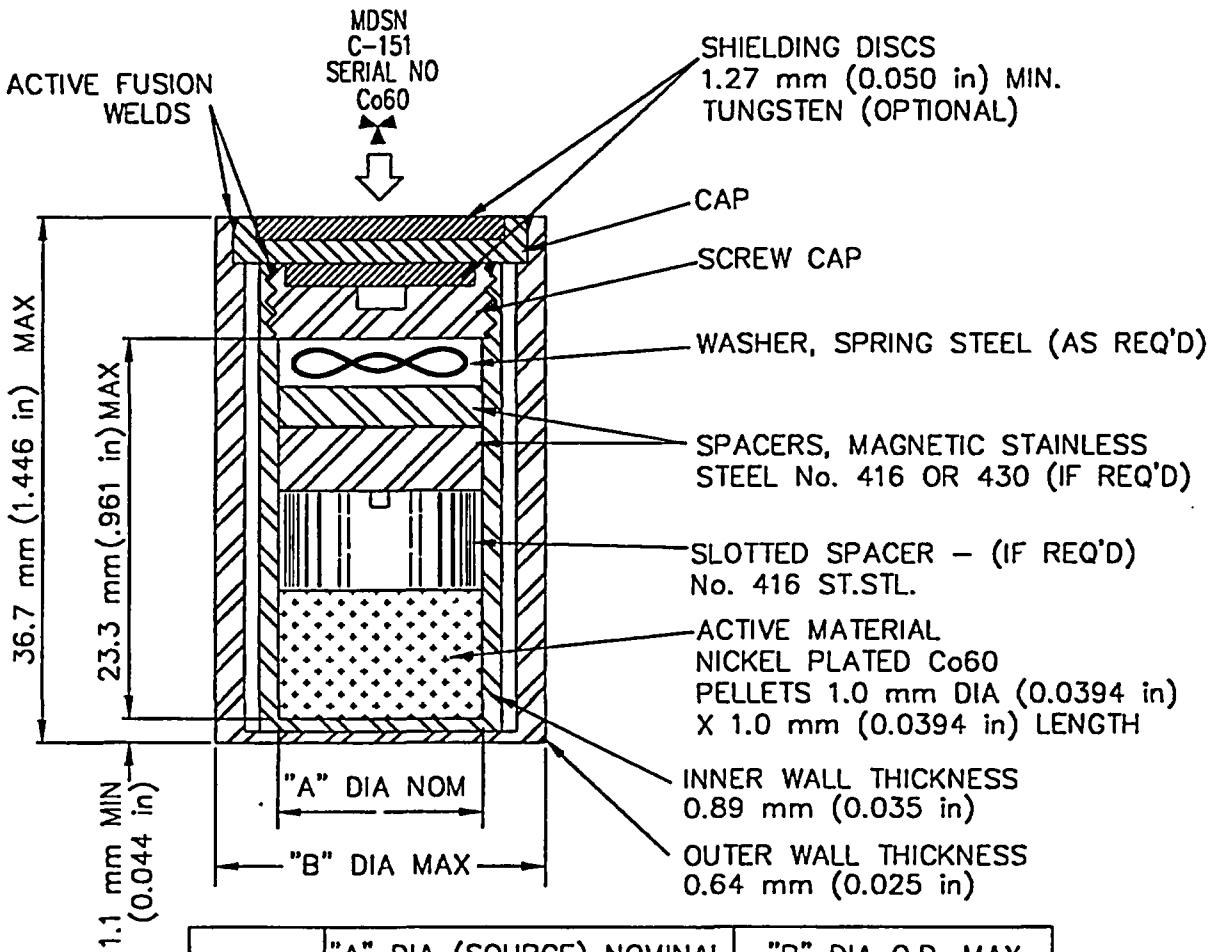

TYPE	"A" DIA (SOURCE) NOMINAL cm	in	"B" DIA O.D. MAX cm	in
1.50	1.50	0.591	1.83	0.722
2.0	2.0	0.787	2.34	0.922

NOTES:

1. CAPSULE MATERIAL NO. 316L STAINLESS STEEL UNLESS OTHERWISE SPECIFIED.
2. MINIMUM ACTIVE LOADING HEIGHT 0.5 cm (0.2 in).
3. DIMENSIONS SHOWN ARE AT 20°C (68°F).
4. NOMINAL PACKING DENSITY OF RADIOACTIVE PELLETS:
   5.34 g/cm^3 WHEN PELLET HEIGHT BELOW 0.7 cm.
   5.78 g/cm^3 WHEN PELLET HEIGHT 0.7 cm AND ABOVE.
5. "A" DIA. (SOURCE) NOMINAL AND "B" DIA. O.D. MAX SHOWN ONLY FOR TWO CAPSULE TYPES. FOR OTHER CAPSULE TYPES REFER TO DWG A03049

MDS Nordion
447 MARCH RD.
KANATA, ONTARIO, CANADA K2K 1X8

TITLE
TELETHERAPY SOURCE CAPSULE

REF DWG: A03049 | REVISED: MAR 2000

THIS DRAWING IS THE PROPERTY OF MDS NORDION INCORPORATED, AND IS SUBMITTED FOR CONSIDERATION ON THE UNDERSTANDING THAT THERE SHALL BE NO EXPLOITATION OF ANY INFORMATION CONTAINED HEREIN EXCEPT WITH THE SPECIFIC WRITTEN AGREEMENT OF MDS NORDION INCORPORATED.

DATE: JUNE 4, 1992			No.	REV
DRAWN	CHECKED	APPROVED	C-151	V
DMI	D.W.	A.S.T.	SHT 1 OF 1	

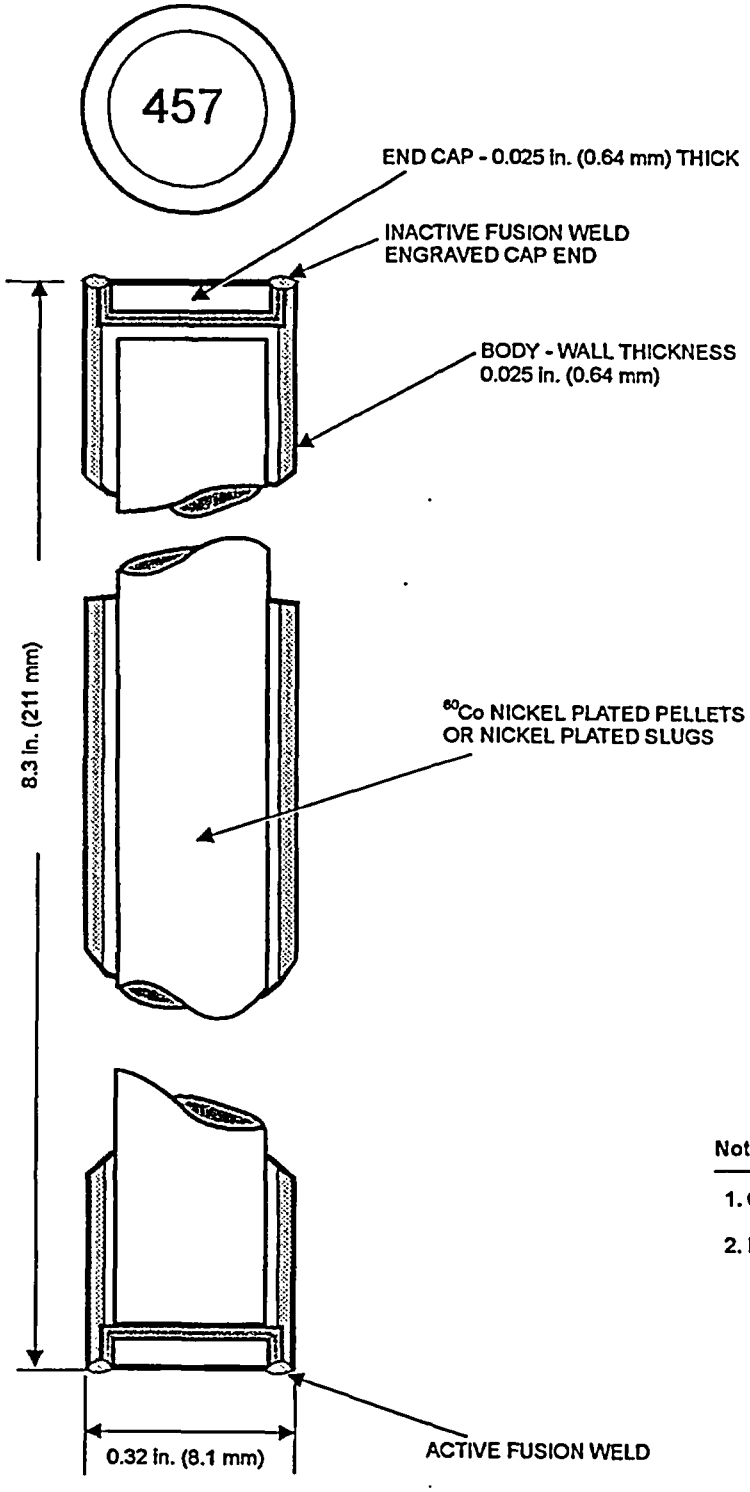

Notes

1. Capsule material: Type 316L Stainless Steel
2. Engraved on end cap - Serial No.

MDS Nordion

447 March Road, P.O. Box 13500
Kanata, Ontario, Canada, K2K 1X8
Tel: (613) 592-2790 · Fax. (613) 592-6937

THIS DRAWING IS THE PROPERTY OF MDS NORDION INC. AND IS SUBMITTED FOR CONSIDERATION ON THE UNDERSTANDING THAT THERE SHALL BE NO EXPLOITATION OF ANY INFORMATION CONTAINED HEREIN EXCEPT WITH THE SPECIFIC WRITTEN AGREEMENT OF MDS NORDION INC.

TITLE	C-177 Sealed Source		
REF.	A05195 IN/SS 1387 C177	REVISED Feb 98	DCN A1154-D-01A
DATE	May 1967	No. C-177	ISSUE 4
DRAWN	CHECKED DM	APPROVED MK	SHEET 1 OF 1

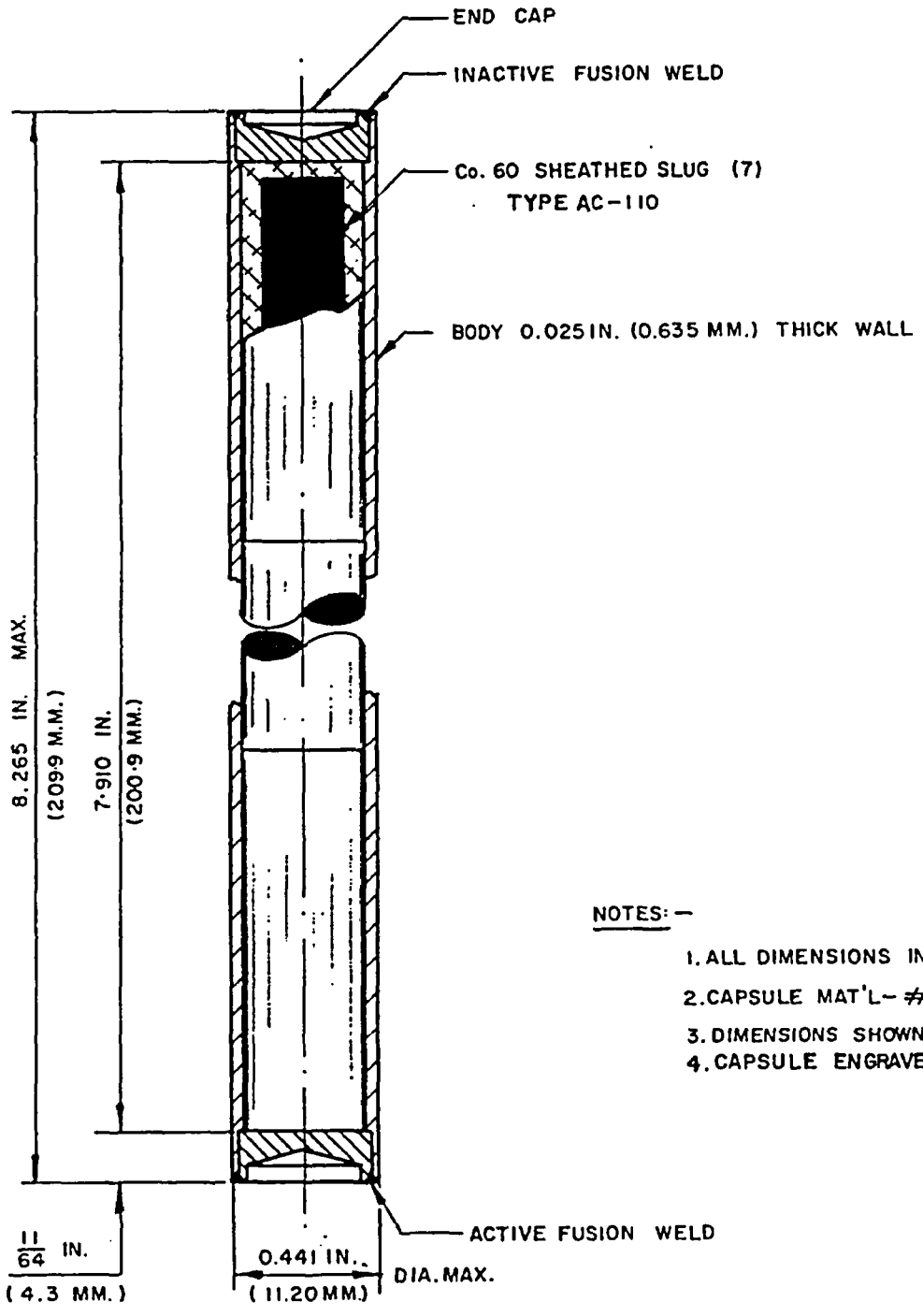

NOTES:—

1. ALL DIMENSIONS IN INCHES AND MILLIMETERS.
2. CAPSULE MAT'L— # 316 ELC STAIN. STL.
3. DIMENSIONS SHOWN ARE AT 68°F (20°C)
4. CAPSULE ENGRAVED - A.E.C.L. Co 60, C-185 AND SERIAL NUMBER AS SPECIFIED

MDS Nordion
447 March Road, P.O. Box 13500
Kanata, Ontario, Canada, K2K 1X8
Tel: (613) 592-2790 · Fax. (613) 592-6937

THIS DRAWING IS THE PROPERTY OF MDS NORDION AND IS SUBMITTED FOR CONSIDERATION ON THE UNDERSTANDING THAT THERE SHALL BE NO EXPLOITATION OF ANY INFORMATION CONTINUED HEREIN EXCEPT WITH THE SPECIFIC WRITTEN AGREEMENT OF MDS NORDION.

TITLE	GAMMACELL 220 PENCIL (SHEATHED SLUG TYPE)			
REF. DWG. A06831			REVISED APRIL 1, 1971	
DATE NOVEMBER 22, 1967			No. C-185	REV. A
DRAWN DLB	CHECKED	APPROVED	SHEET 1 OF 1	

DF 1

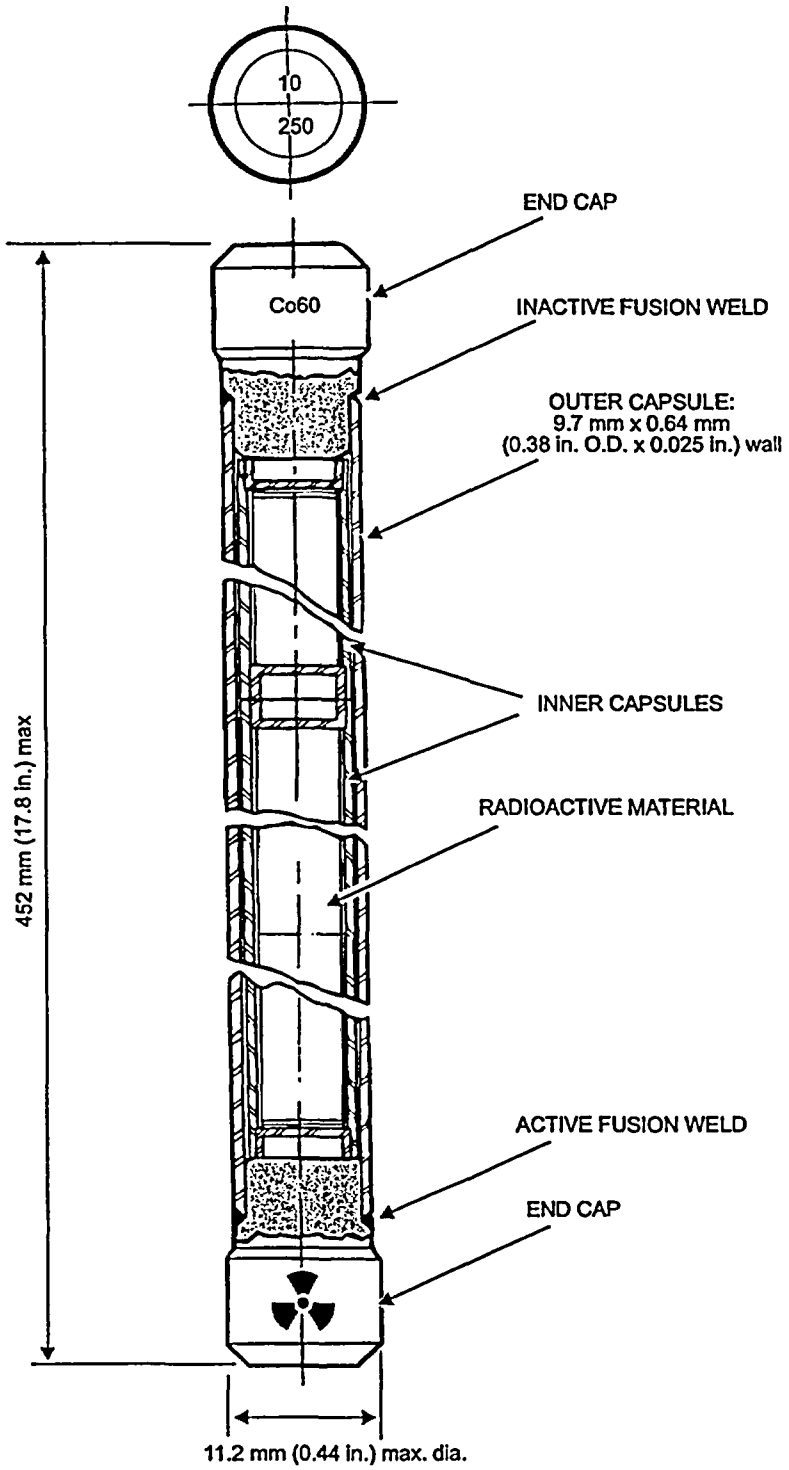

C-188 Type Number	Model Number of Inners
1.	C-177/C-177
2.	AC-191/AC-191
3.	AC-195/AC195
4.	C-246
5.	AC-339/AC-339
6.	AC-345/C-348
7.	C-177/AC-191
8.	C-177/AC-195
9.	C-177/AC-339
10.	AC-191/AC-195
11.	AC-191/AC-339
12.	AC-195/AC-339
13.	See Note 6

Notes

1. Conforms to IAEA Special Form requirements CNSC Certificate No. CDN/0010/S-96.
2. Radioactive Material: Cobalt-60 in solid form.
3. Outer capsule material: Type 316L stainless steel.
4. All capsules are sealed by fusion welds.
5. Engraved on capsule:
   (A) Upper end cap
   face: serial number
   diameter: C188 Co60
   (B) Lower end cap diameter: MDSN X and Trefoil where X is material heat number.
6. Any inner design constructed from stainless steel or zircaloy consisting of one or more capsules containing Cobalt-60 pellets, slugs or wafers and of a design similar, but not identical to one or more of those contained in types 1 to 12.

MDS Nordion
447 March Road, P.O. Box 13500
Kanata, Ontario, Canada, K2K 1X8
Tel: (613) 592-2790 · Fax. (613) 592-6937

THIS DRAWING IS THE PROPERTY OF MDS NORDION INC. AND IS SUBMITTED FOR CONSIDERATION ON THE UNDERSTANDING THAT THERE SHALL BE NO EXPLOITATION OF ANY INFORMATION CONTAINED HEREIN EXCEPT WITH THE SPECIFIC WRITTEN AGREEMENT OF MDS NORDION INC.

TITLE

C-188 Cobalt-60 Sealed Source

REF. IN/SS 1383 C188 G130102-177		REVISED Aug 04	DCN A3074-D-01A
DATE FEB 67		No. C-188	ISSUE 19
DRAWN BW	CHECKED JR	APPROVED MK	SHEET 1 OF 1

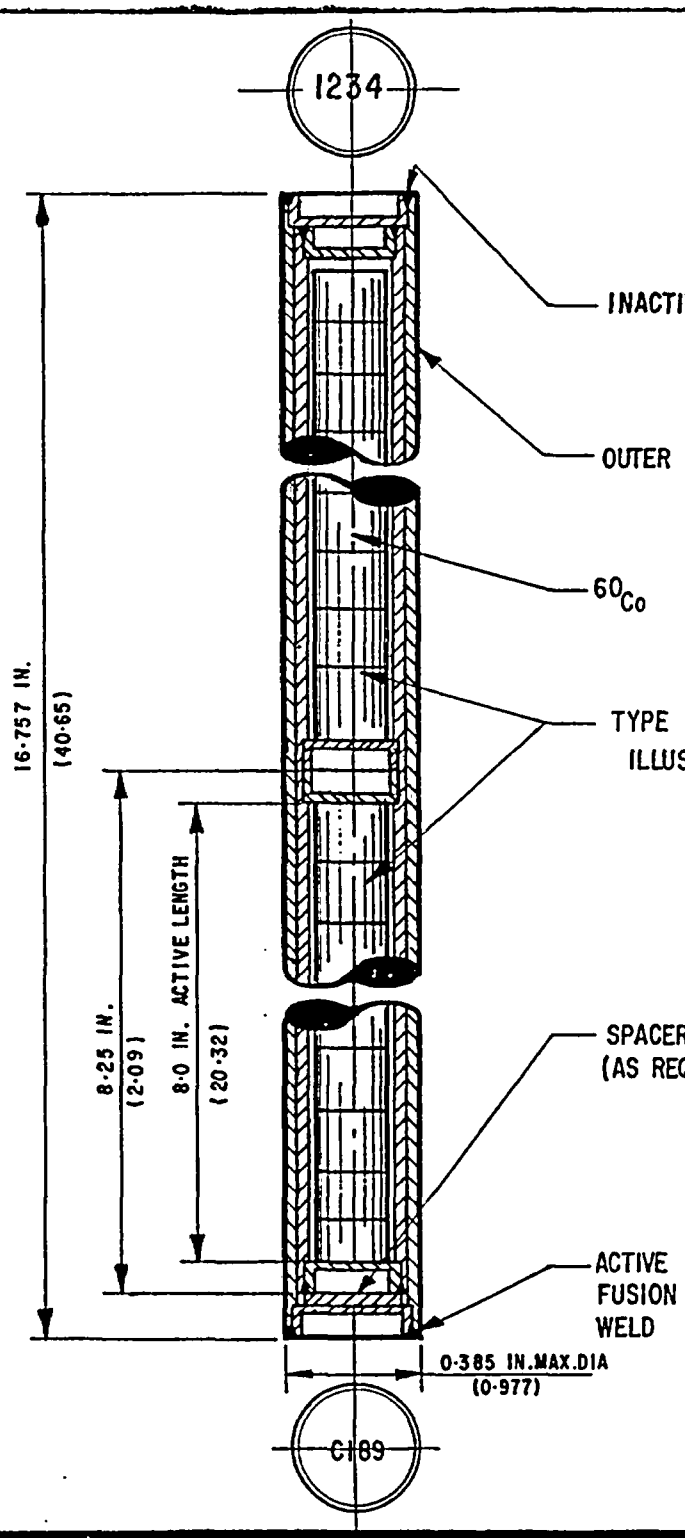

TYPE NO.	INNER CAPSULE	QTY
1	C177	2
2	AC191	2
3	AC195	2
4	C246	1

NOTES-

1. BRACKETED DIMENSIONS REPRESENT CENTIMETRES.
2. ENGRAVING -
   UPPER END CAP - SER. NO.
   LOWER END CAP - C189
3. OUTER CAPSULE MAT'L - 316L STAIN. STEEL
4. DIMENSIONS SHOWN ARE AT 68°F (20°C)

MDS Nordion
447 March Road, P.O. Box 13500
Kanata, Ontario, Canada, K2K 1X8
Tel: (613) 592-2790 · Fax. (613) 592-6937

THIS DRAWING IS THE PROPERTY OF MDS NORDION AND IS SUBMITTED FOR CONSIDERATION ON THE UNDERSTANDING THAT THERE SHALL BE NO EXPLOITATION OF ANY INFORMATION CONTINUED HEREIN EXCEPT WITH THE SPECIFIC WRITTEN AGREEMENT OF MDS NORDION.

TITLE	CAPSULE ASSEMBLY		
REF. DWG.	A05233	REVISED	JAN. 6, 1972
DATE	21 DEC. 1971	No.	C-189
DRAWN	CHECKED	APPROVED	REV. A
		SHEET 1 OF 1	

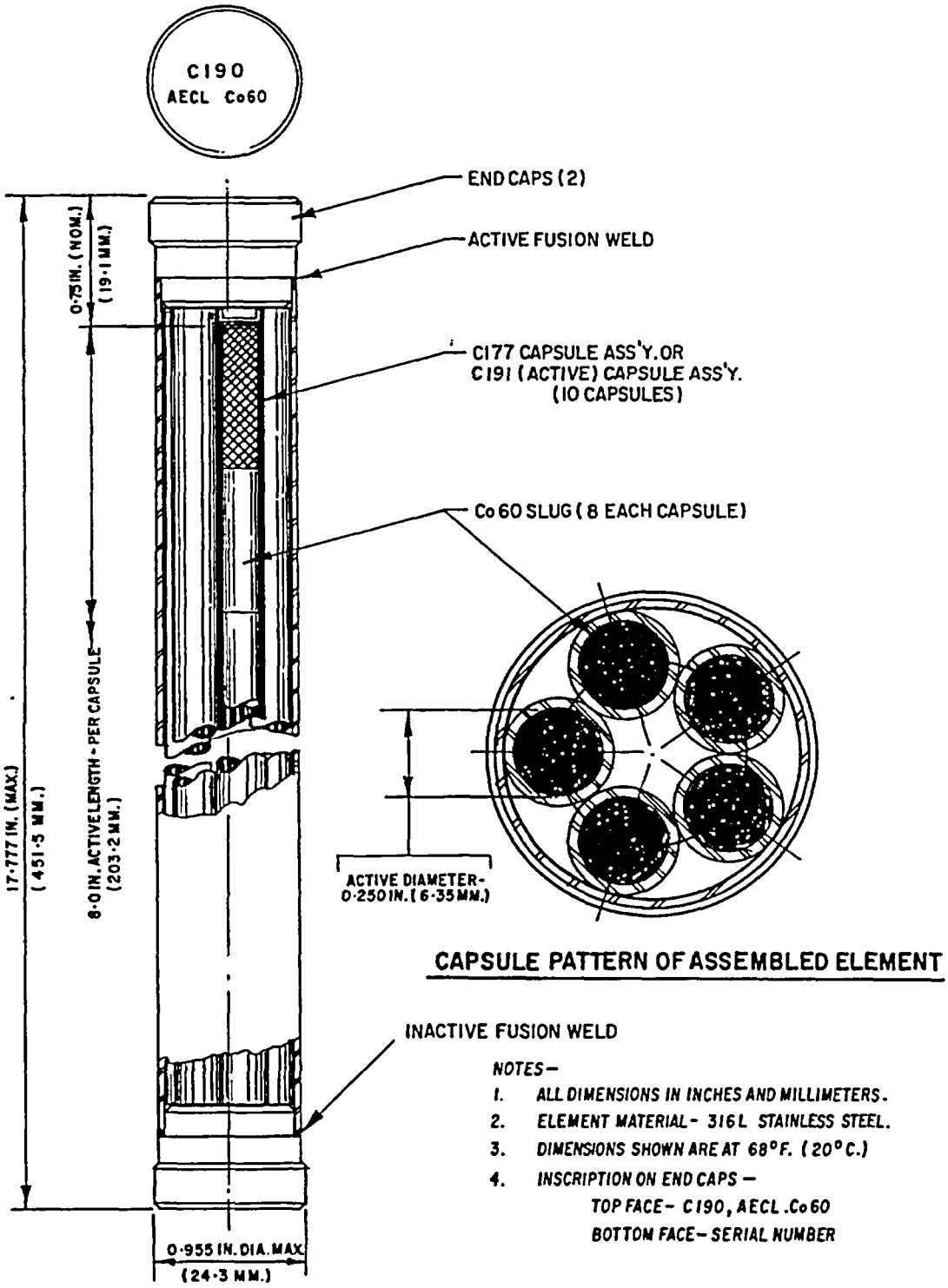

CAPSULE PATTERN OF ASSEMBLED ELEMENT

NOTES—

1. *ALL DIMENSIONS IN INCHES AND MILLIMETERS.*
2. *ELEMENT MATERIAL - 316L STAINLESS STEEL.*
3. *DIMENSIONS SHOWN ARE AT 68°F. (20°C.)*
4. *INSCRIPTION ON END CAPS —*
   TOP FACE - C190, AECL .Co60
   BOTTOM FACE - SERIAL NUMBER

MDS Nordion
447 March Road, P.O. Box 13500
Kanata, Ontario, Canada, K2K 1X8
Tel: (613) 592-2790 · Fax. (613) 592-6937

THIS DRAWING IS THE PROPERTY OF MDS NORDION AND IS SUBMITTED FOR CONSIDERATION ON THE UNDERSTANDING THAT THERE SHALL BE NO EXPLOITATION OF ANY INFORMATION CONTINUED HEREIN EXCEPT WITH THE SPECIFIC WRITTEN AGREEMENT OF MDS NORDION.

TITLE	INDUSTRIAL IRRADIATOR SOURCE ELEMENT ASSEMBLY		
REF. DWG. A 05255		REVISED	
DATE 11 JULY 1967		No. C-190	REV.
DRAWN DK	CHECKED	APPROVED	
		SHEET 1 OF 1	

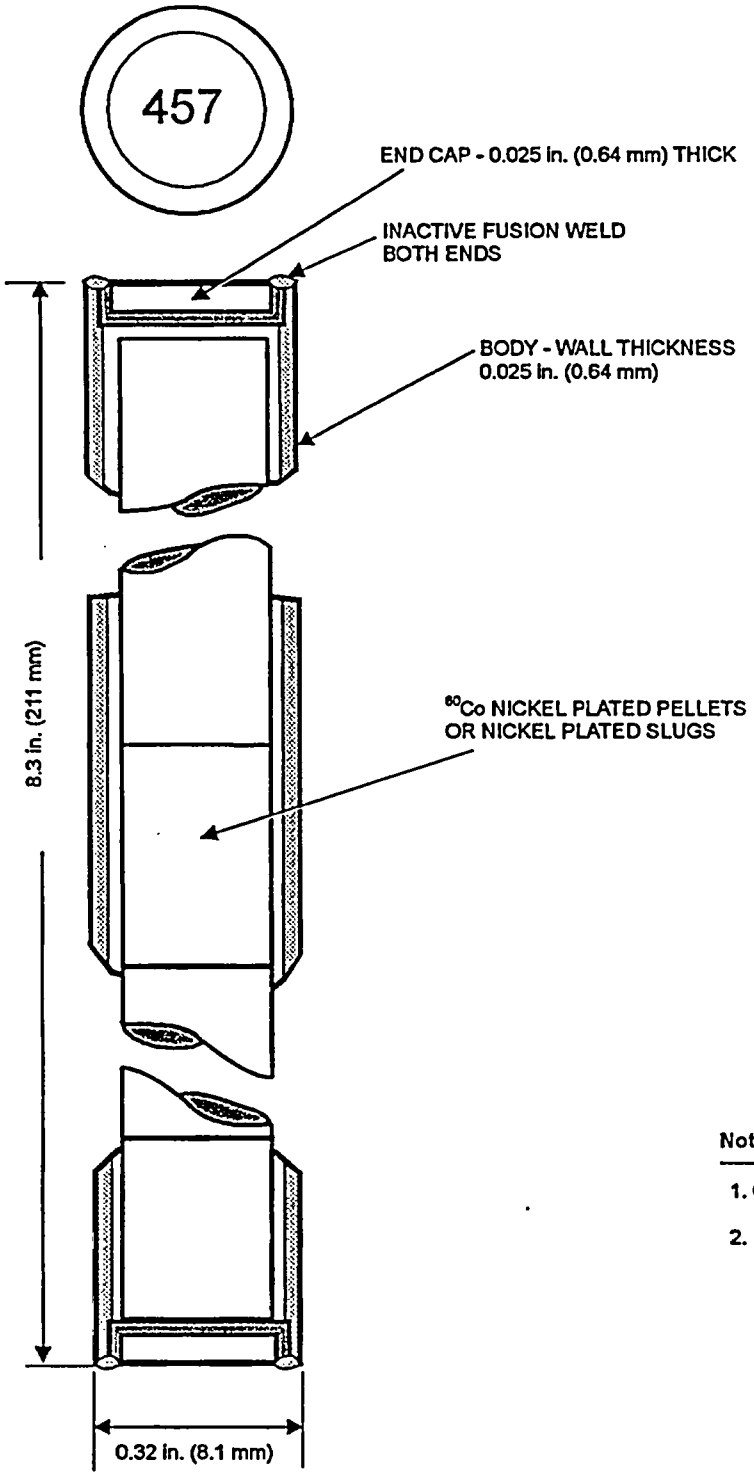

Notes

1. Capsule material: Type 316L Stainless Steel
2. Engraved on end cap - Serial No.

MDS Nordion

447 March Road, P.O. Box 13500
Kanata, Ontario, Canada, K2K 1X8
Tel: (613) 592-2790 · Fax. (613) 592-6937

THIS DRAWING IS THE PROPERTY OF MDS NORDION INC. AND IS SUBMITTED FOR CONSIDERATION ON THE UNDERSTANDING THAT THERE SHALL BE NO EXPLOITATION OF ANY INFORMATION CONTAINED HEREIN EXCEPT WITH THE SPECIFIC WRITTEN AGREEMENT OF MDS NORDION INC.

TITLE	AC-191 Sealed Source		
REF. A05185 IN/SS 1388 AC191		REVISED Feb 98	DCN A1154-D-01A
DATE May 1967		No. AC-191	ISSUE 6
DRAWN	CHECKED BM	APPROVED MK	SHEET 1 OF 1

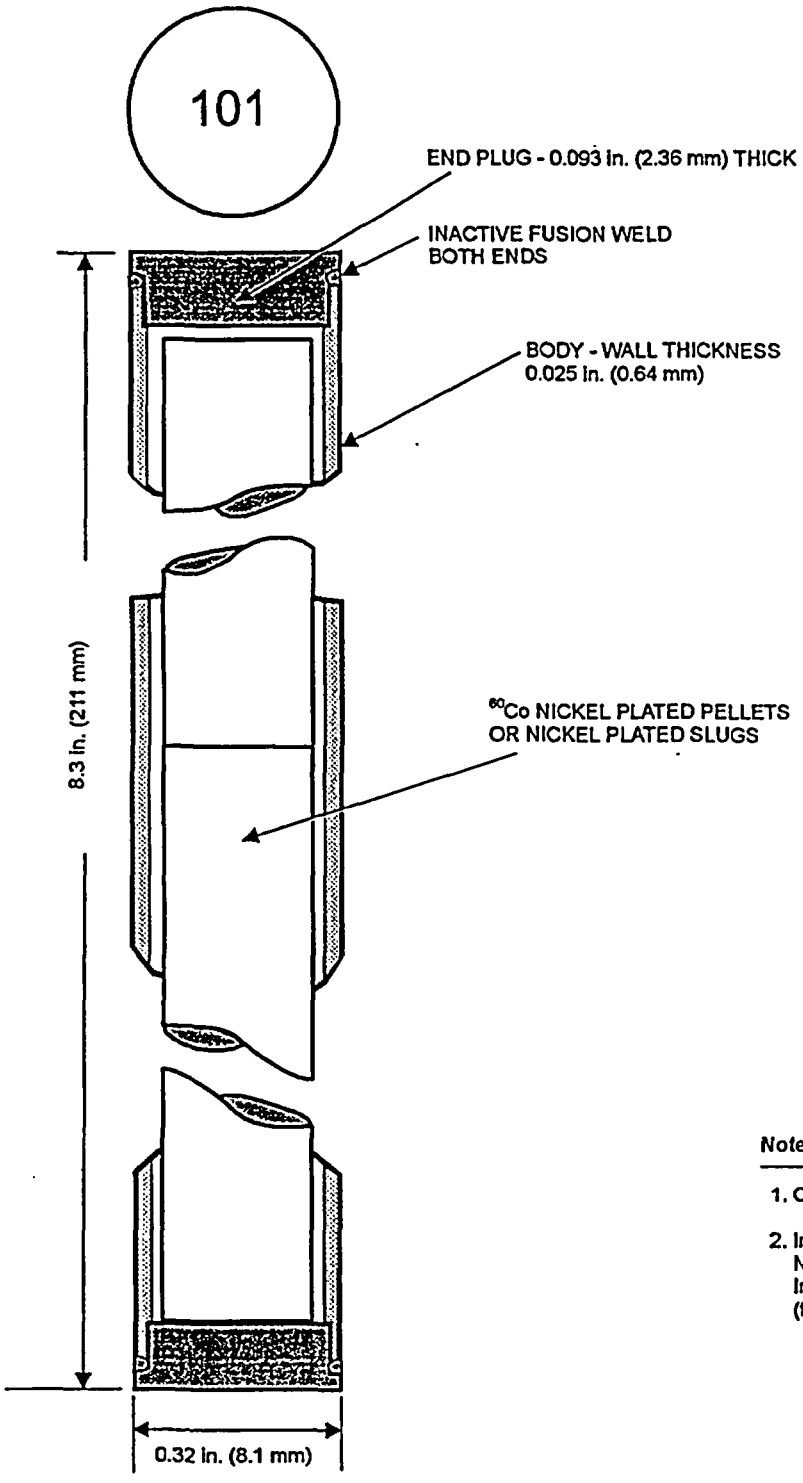

Notes

1. Capsule material: Zircaloy 2
2. Inscription on top end plug - serial number (engraved)
   Number (engraved)
   Inscription on end plug - lot number
   (two letters stamped)

MDS Nordion

447 March Road, P.O. Box 13500
Kanata, Ontario, Canada, K2K 1X8
Tel: (613) 592-2790 · Fax. (613) 592-6937

THIS DRAWING IS THE PROPERTY OF MDS NORDION INC. AND IS SUBMITTED FOR CONSIDERATION ON THE UNDERSTANDING THAT THERE SHALL BE NO EXPLOITATION OF ANY INFORMATION CONTAINED HEREIN EXCEPT WITH THE SPECIFIC WRITTEN AGREEMENT OF MDS NORDION INC.

TITLE	AC-195 Sealed Source		
REF. A08160 IN/SS 1393 AC195		REVISED Feb 98	DCN A1154-D-01A
DATE Oct 1968		No. AC-195	ISSUE 7
DRAWN	CHECKED	APPROVED	SHEET 1 OF 1

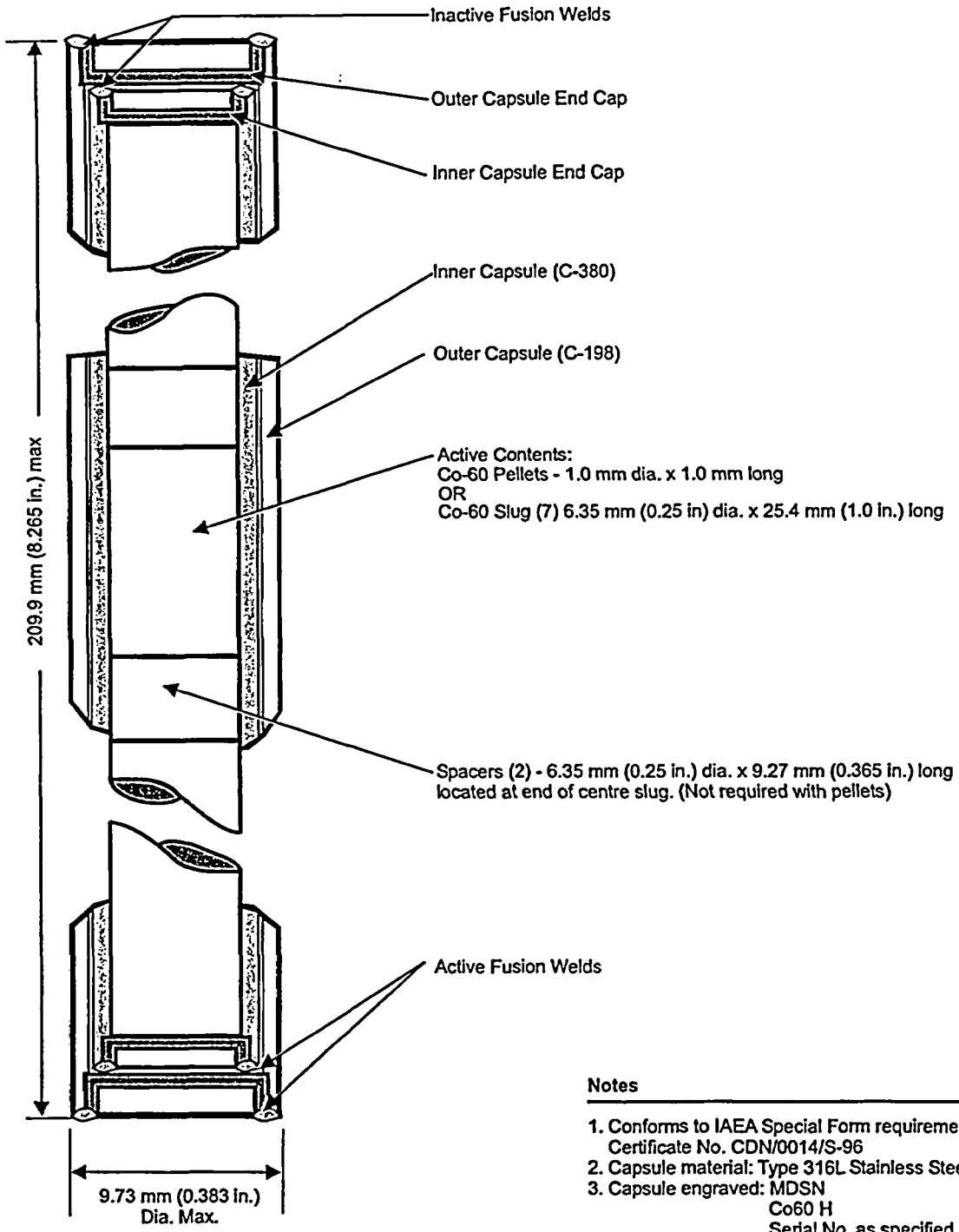

Notes

1. Conforms to IAEA Special Form requirements.
   Certificate No. CDN/0014/S-96
2. Capsule material: Type 316L Stainless Steel
3. Capsule engraved: MDSN
   Co60 H
   Serial No. as specified
   Trefoil symbol
4. All dimensions shown at 20°C

MDS Nordion

447 March Road, P.O. Box 13500
Kanata, Ontario, Canada, K2K 1X8
Tel: (613) 592-2790 · Fax. (613) 592-6937

THIS DRAWING IS THE PROPERTY OF MDS NORDION INC. AND IS SUBMITTED FOR CONSIDERATION ON THE UNDERSTANDING THAT THERE SHALL BE NO EXPLOITATION OF ANY INFORMATION CONTAINED HEREIN EXCEPT WITH THE SPECIFIC WRITTEN AGREEMENT OF MDS NORDION INC.

TITLE	**C-198 Sealed Source**		
REF. IN/SS 1255 C198 G130102-140	REVISED Mar 03	DCN A2678-D-01A	
DATE November 1967	No. **C-198**		ISSUE **7**
DRAWN BW / CHECKED MK / APPROVED VE	SHEET 1 OF 1		

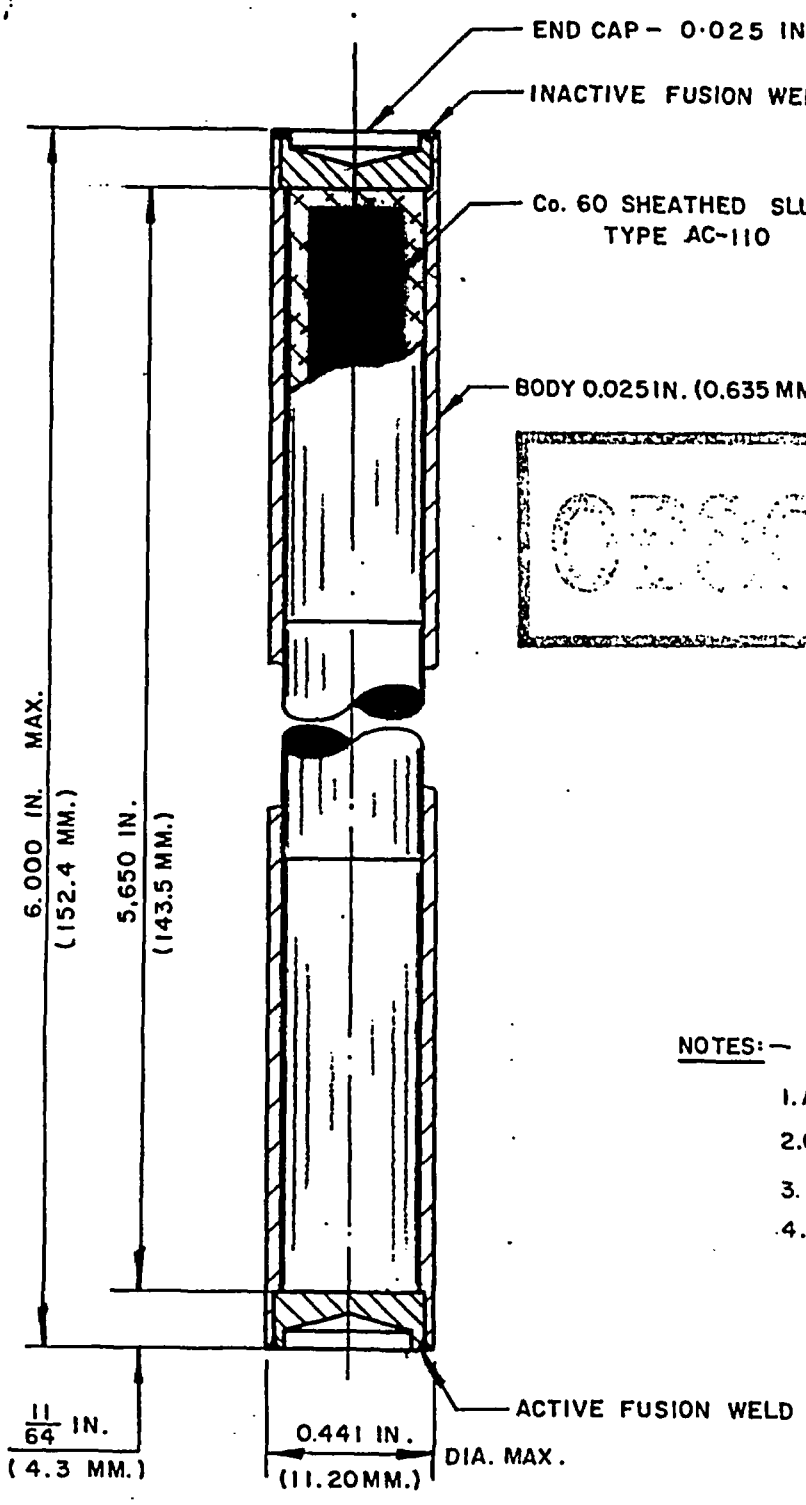

OBSOLETE

OBSOLETE
A. TROTT
NOV. 77

NOTES:–

1. ALL DIMENSIONS IN INCHES AND MILLIMETERS.
2. CAPSULE MAT'L – # 316 ELC STAIN. STL.
3. DIMENSIONS SHOWN ARE AT 68°F (20°C)
4. CAPSULE ENGRAVED –
   A.E.C.L., Co. 60, C-199 AND SERIAL NUMBER AS SPECIFIED.

ATOMIC ENERGY OF CANADA LIMITED COMMERCIAL PRODUCTS P.O. BOX 6300, Postal Station J, OTTAWA, CANADA. K2A 3W3	TITLE GAMMACELL 200 PENCIL (SHEATHED SLUG TYPE)				
	REF. DWG. [illegible]			REVISED 9·JUNE·69	
THIS DRAWING IS THE PROPERTY OF ATOMIC ENERGY OF CANADA LIMITED, AND IS SUBMITTED FOR CONSIDERATION ON THE UNDERSTANDING THAT THERE SHALL BE NO EXPLOITATION OF ANY INFORMATION CONTAINED HEREIN EXCEPT WITH THE SPECIFIC WRITTEN AGREEMENT OF ATOMIC ENERGY OF CANADA LIMITED.	DATE NOVEMBER 22, 1967			No. C–199	REV. A
	DRAWN ΦB	CHECKED	APPROVED	SHEET 1 OF 1	

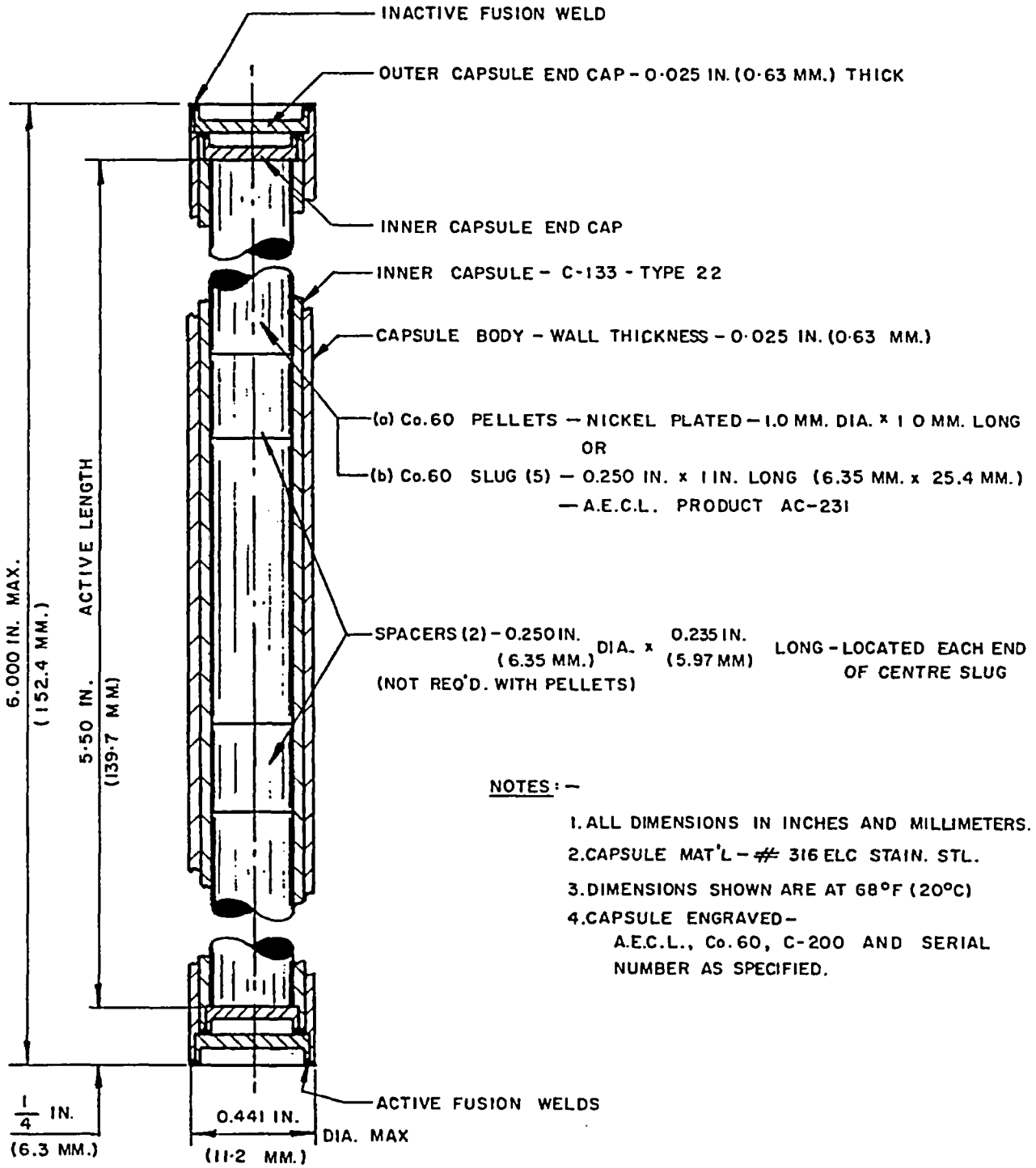

NOTES: —

1. ALL DIMENSIONS IN INCHES AND MILLIMETERS.
2. CAPSULE MAT'L — # 316 ELC STAIN. STL.
3. DIMENSIONS SHOWN ARE AT 68°F (20°C)
4. CAPSULE ENGRAVED — A.E.C.L., Co.60, C-200 AND SERIAL NUMBER AS SPECIFIED.

MDS Nordion

447 March Road, P.O. Box 13500
Kanata, Ontario, Canada, K2K 1X8
Tel: (613) 592-2790 · Fax. (613) 592-6937

THIS DRAWING IS THE PROPERTY OF MDS NORDION AND IS SUBMITTED FOR CONSIDERATION ON THE UNDERSTANDING THAT THERE SHALL BE NO EXPLOITATION OF ANY INFORMATION CONTINUED HEREIN EXCEPT WITH THE SPECIFIC WRITTEN AGREEMENT OF MDS NORDION.

TITLE	GAMMACELL 200 PENCIL (PELLET OR SLUG TYPE)			
REF. DWG.	A03075		REVISED 9 JUNE 69	
DATE	NOVEMBER 22, 1967		No. C - 200	REV. A
DRAWN	CHECKED	APPROVED	SHEET 1 OF 1	

DF 1

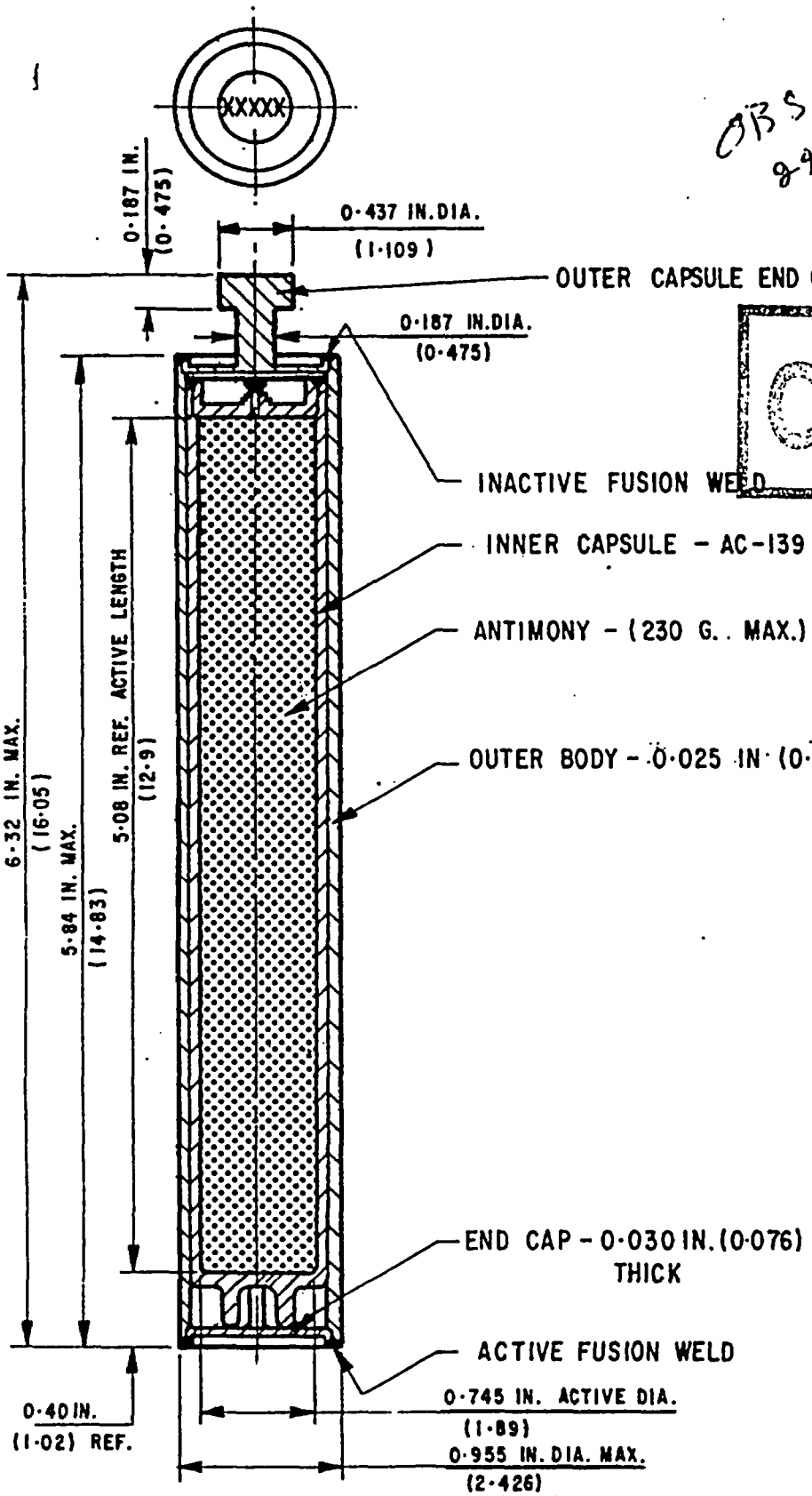

OBSOLETE
24 July 1972
JESA

OBSOLETE

NOTES-

1. OUTER CAPSULE MATERIAL - STAIN. STL. TYPE 316L.
2. BRACKETED DIMENSIONS REPRESENT CENTIMETRES.
3. ENGRAVING - ON UPPER END CAP - SERIAL NO.,
   ON CAPSULE BODY - AECL, C-232, Sb124
4. DIMENSIONS SHOWN ARE AT 68° F (20°C).

ATOMIC ENERGY OF CANADA LIMITED COMMERCIAL PRODUCTS P.O. BOX 93 OTTAWA	TITLE ANTIMONY 124 SOURCE CAPSULE ASSEMBLY			
	REF. DWG. A07533		REVISED	
THIS DRAWING IS THE PROPERTY OF ATOMIC ENERGY OF CANADA LIMITED, AND IS SUBMITTED FOR CONSIDERATION ON THE UNDERSTANDING THAT THERE SHALL BE NO EXPLOITATION OF ANY INFORMATION CONTAINED HEREIN EXCEPT WITH THE SPECIFIC WRITTEN AGREEMENT OF ATOMIC ENERGY OF CANADA LIMITED.	DATE DEC. 9, 1969		No. C-232	REV.
	DRAWN	CHECKED	APPROVED	
			SHEET 1 OF 1	

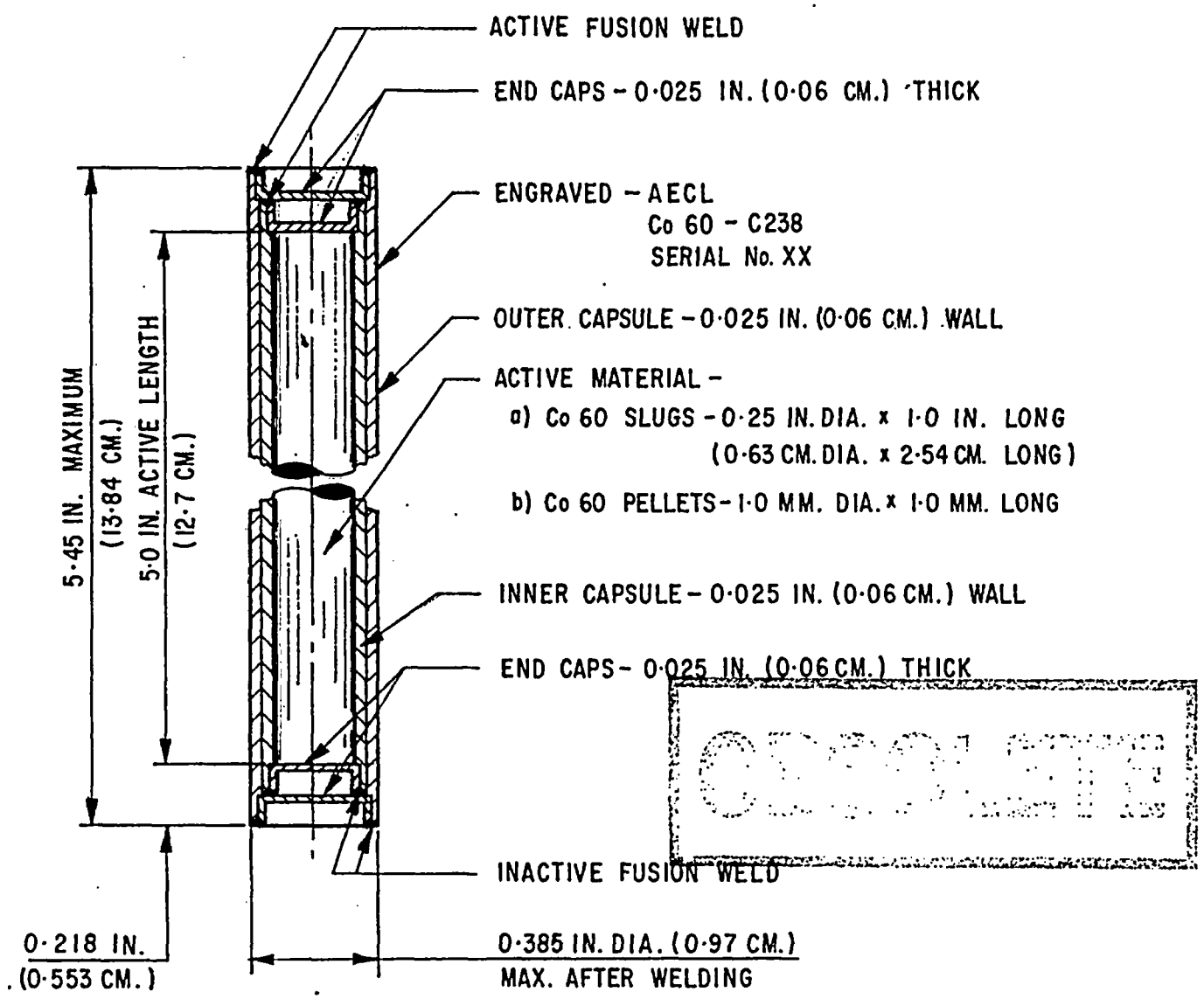

OBSOLETE

NOTES -

1. MATERIAL - STAINLESS STEEL - TYPE 316 L
2. DIMENSIONS SHOWN ARE AT 68° F (20°C)

OBSOLETE
A. TROTT NOV. 77

ATOMIC ENERGY OF CANADA LIMITED COMMERCIAL PRODUCTS P.O. BOX 93 OTTAWA	TITLE	GC 210 PENCIL (PELLET OR SLUG TYPE)		
	REF. DWG. A 07887		REVISED	
THIS DRAWING IS THE PROPERTY OF ATOMIC ENERGY OF CANADA LIMITED, AND IS SUBMITTED FOR CONSIDERATION ON THE UNDERSTANDING THAT THERE SHALL BE NO EXPLOITATION OF ANY INFORMATION CONTAINED HEREIN EXCEPT WITH THE SPECIFIC WRITTEN AGREEMENT OF ATOMIC ENERGY OF CANADA LIMITED.	DATE OCT. 15, 1969		No. C-238	REV.
	DRAWN	CHECKED	APPROVED	
				SHEET 1 OF 1

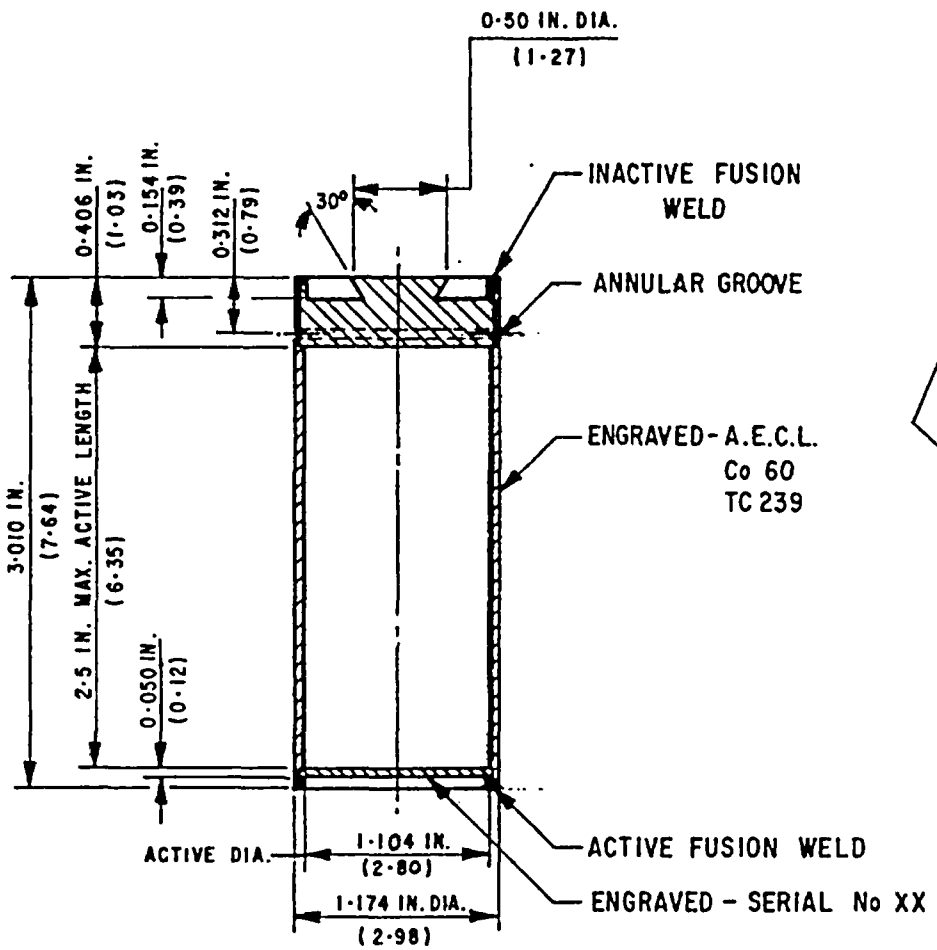

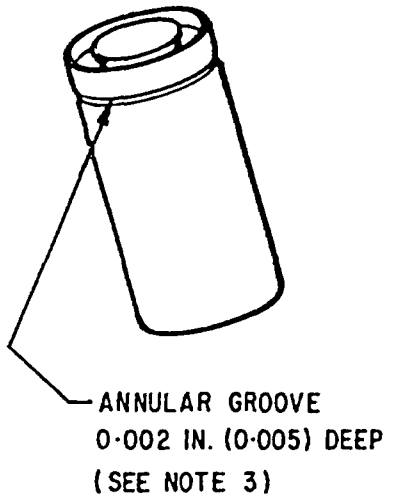

NOTES –

1. MATERIAL – STAINLESS STEEL – TYPE – 316L.
2. BRACKETED DIMENSIONS REPRESENT CENTIMETRES.
3. OPEN CAPSULE WITH HIGH SPEED ABRASIVE CUTTING WHEEL OR TUBE CUTTER, APPLIED AT ANNULAR GROOVE. CUT 0·035 IN.(0·09) DEEP.
4. DIMENSIONS SHOWN ARE AT 68°F (20°C).
5. MAXIMUM CAPACITY – 200 g , 10,000 Ci of Co 60.

MDS Nordion
447 March Road, P.O. Box 13500
Kanata, Ontario, Canada, K2K 1X8
Tel: (613) 592-2790 · Fax. (613) 592-6937

THIS DRAWING IS THE PROPERTY OF MDS NORDION AND IS SUBMITTED FOR CONSIDERATION ON THE UNDERSTANDING THAT THERE SHALL BE NO EXPLOITATION OF ANY INFORMATION CONTINUED HEREIN EXCEPT WITH THE SPECIFIC WRITTEN AGREEMENT OF MDS NORDION.

TITLE	WELDED BULK SHIPPING CAPSULE – 40 cc		
REF. DWG. A08259		REVISED APRIL 78.	
DATE 24 – 7 – 69		No. TC 239	REV. B
DRAWN DB	CHECKED DRd.	APPROVED 99M	SHEET 1 OF 1

DF 1

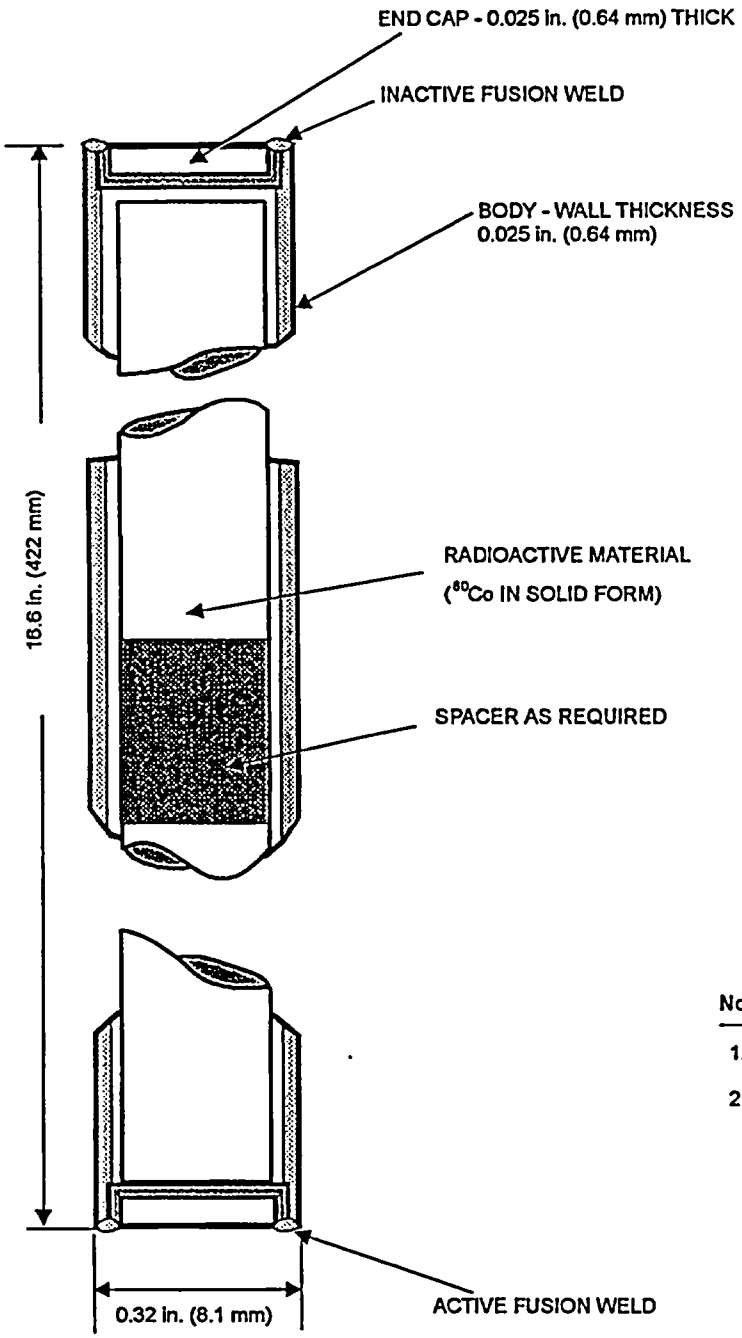

Notes

1. Capsule material: Type 316L Stainless Steel
2. Serial number engraved on body

MDS Nordion

447 March Road, P.O. Box 13500
Kanata, Ontario, Canada, K2K 1X8
Tel: (613) 592-2790 · Fax. (613) 592-6937

THIS DRAWING IS THE PROPERTY OF MDS NORDION INC. AND IS SUBMITTED FOR CONSIDERATION ON THE UNDERSTANDING THAT THERE SHALL BE NO EXPLOITATION OF ANY INFORMATION CONTAINED HEREIN EXCEPT WITH THE SPECIFIC WRITTEN AGREEMENT OF MDS NORDION INC.

TITLE	C-246 Sealed Source		
REF.	A09541 IN/SS 1386 C246	REVISED Feb 98	DCN A1154-D-01A
DATE	March 1970	No. C-246	ISSUE 5
DRAWN	CHECKED BJY	APPROVED MK	SHEET 1 OF 1

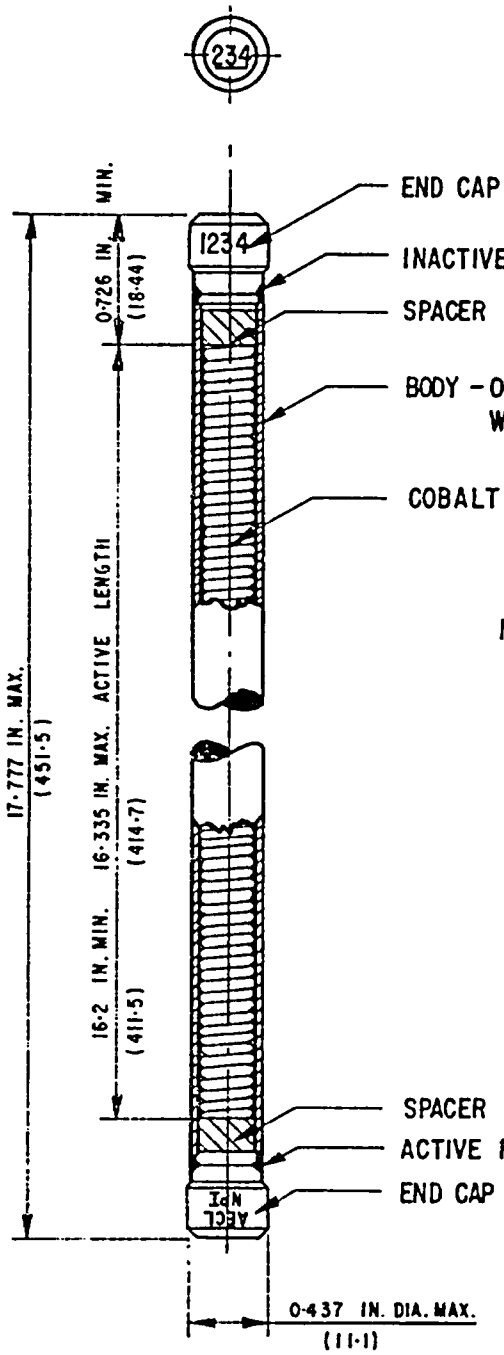

NOTES -

1. BRACKETED DIMENSIONS REPRESENT MILLIMETRES.
2. OUTER CAPSULE & SPACERS - MAT'L. 316L STAIN. ST'L.
3. ENGRAVED ON CAPSULE -
   a) UPPER END CAP (FACE) LAST THREE FIGURES OF SERIAL NUMBER UNDERLINED.
   (DIAMETER) FULL SERIAL No. & C-247
   b) LOWER END CAP (DIAMETER) AECL NPI Co 60
4. DIMENSIONS SHOWN ARE AT 68° F (20°C).

MDS Nordion

447 March Road, P.O. Box 13500
Kanata, Ontario, Canada, K2K 1X8
Tel: (613) 592-2790 · Fax. (613) 592-6937

THIS DRAWING IS THE PROPERTY OF MDS NORDION AND IS SUBMITTED FOR CONSIDERATION ON THE UNDERSTANDING THAT THERE SHALL BE NO EXPLOITATION OF ANY INFORMATION CONTINUED HEREIN EXCEPT WITH THE SPECIFIC WRITTEN AGREEMENT OF MDS NORDION.

TITLE: SMALL DIAMETER COIL SOURCE			
REF. DWG. A09899			REVISED
DATE MAY 26, 1970			No. C-247 / REV.
DRAWN	CHECKED	APPROVED	SHEET 1 OF 1

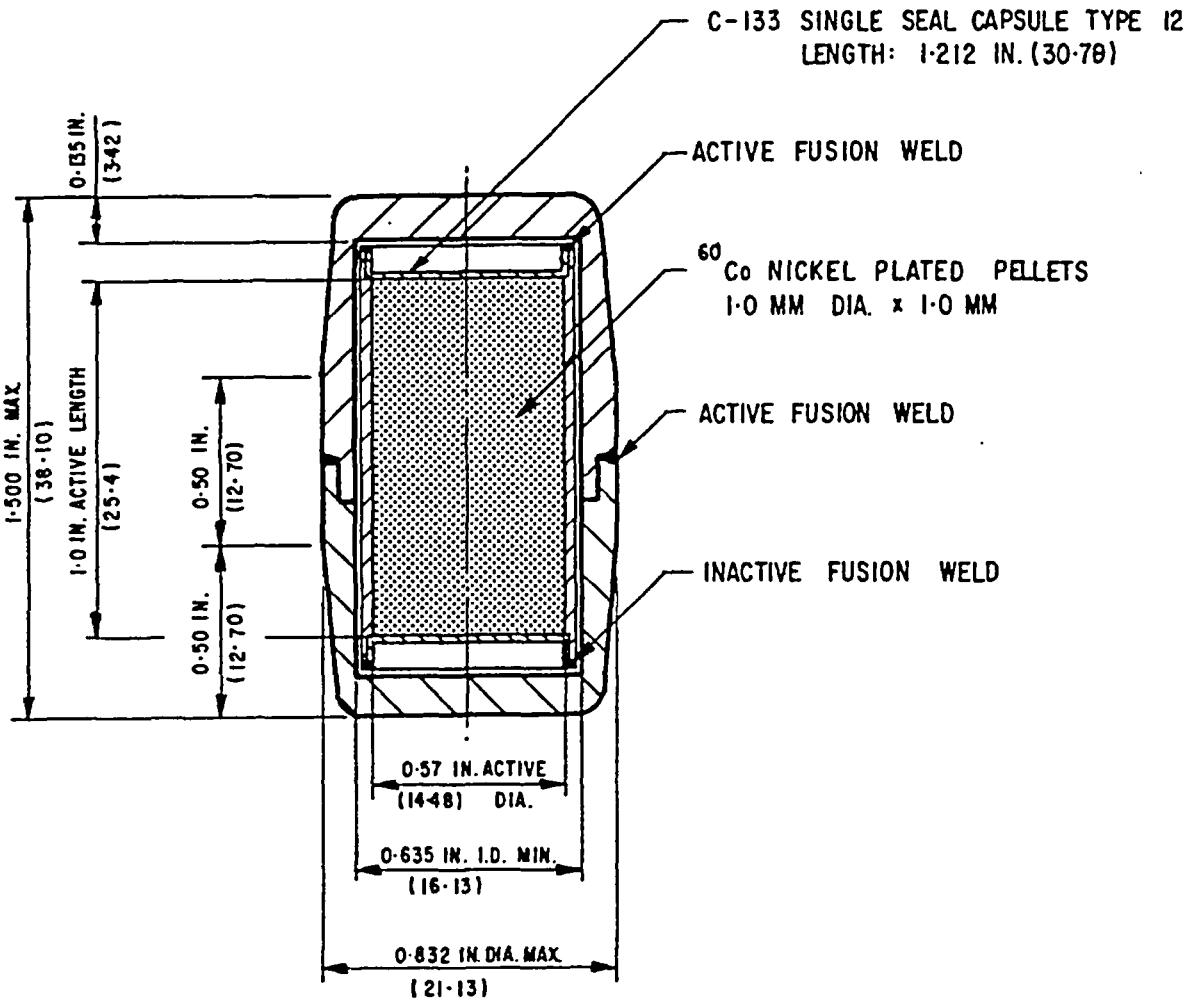

NOTES-

1. BRACKETED DIMENSIONS REPRESENT MILLIMETRES.
2. CAPSULE MATERIAL - 316L STAINLESS STEEL.
3. ENGRAVED ON CAPSULE BODY - C 252 & SERIAL NO.
4. DIMENSION SHOWN ARE AT 68°F (20°C).

MDS Nordion
447 March Road, P.O. Box 13500
Kanata, Ontario, Canada, K2K 1X8
Tel: (613) 592-2790 · Fax. (613) 592-6937

THIS DRAWING IS THE PROPERTY OF MDS NORDION AND IS SUBMITTED FOR CONSIDERATION ON THE UNDERSTANDING THAT THERE SHALL BE NO EXPLOITATION OF ANY INFORMATION CONTINUED HEREIN EXCEPT WITH THE SPECIFIC WRITTEN AGREEMENT OF MDS NORDION

TITLE	G.B. 650 PNEUMATIC CAPSULE ASSEMBLY		
REF. DWG. A10031		REVISED	
DATE MAY 11, 1970		No. C-252	REV.
DRAWN	CHECKED	APPROVED	SHEET 1 OF 1

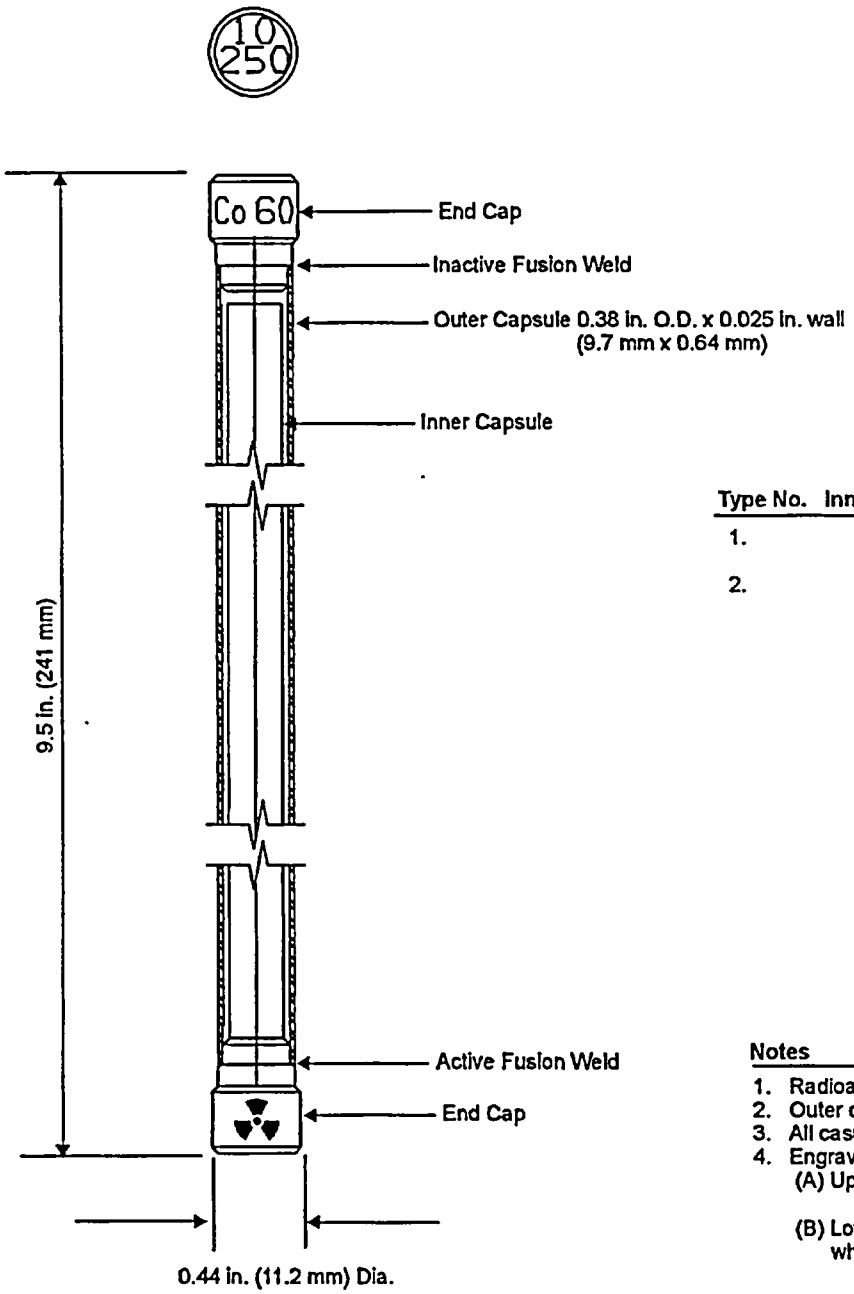

Type No.	Inner Capsule	Qty
1.	C-339	1
2.	C-177	1

Notes

1. Radioactive Material: Cobalt-60 in solid form.
2. Outer capsule material: Type 316L stainless steel.
3. All casules are sealed by fusion welds.
4. Engraved on capsule:
   (A) Upper end cap (face: serial number
   (diameter): C-306 Co60
   (B) Lower end cap (diameter): MDSN X and Trefoil where X is material heat number.

MDS Nordion

447 March Road, P.O. Box 13500
Kanata, Ontario, Canada, K2K 1X8
Tel: (613) 592-2790 · Fax. (613) 592-6937

THIS DRAWING IS THE PROPERTY OF MDS NORDION INC. AND IS SUBMITTED FOR CONSIDERATION ON THE UNDERSTANDING THAT THERE SHALL BE NO EXPLOITATION OF ANY INFORMATION CONTAINED HEREIN EXCEPT WITH THE SPECIFIC WRITTEN AGREEMENT OF MDS NORDION INC.

TITLE

C-306 Cobalt-60 Sealed Source

REF. A14302 IN/SS 1385 C306		REVISED Feb 98	DCN A1154-D-01A
DATE June 1974		No. C-306	ISSUE 2
DRAWN	CHECKED	APPROVED MK	SHEET 1 OF 1

CAPSULE SPECIFICATIONS
(ENGRAVED ON TOP CAP)

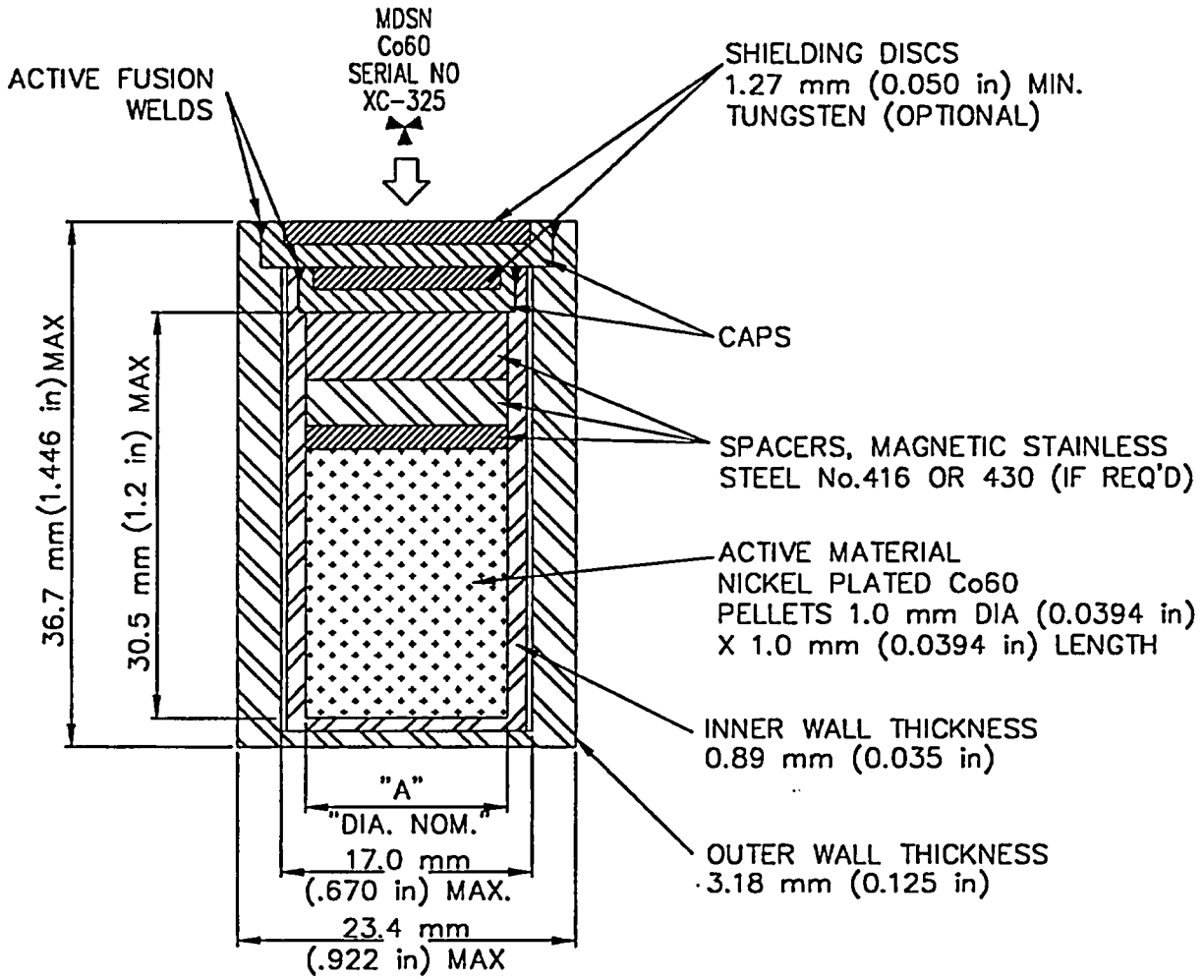

TYPE	"A" DIA (SOURCE) NOMINAL cm	in
1.50	1.50	0.590

NOTES:

1. CAPSULE MATERIAL NO. 316L STAINLESS STEEL UNLESS OTHERWISE SPECIFIED.
2. DIMENSIONS SHOWN ARE AT 20°C (68°F).
3. NOMINAL PACKING DENSITY OF RADIOACTIVE PELLETS 5.78 g/cm^3.
4. CAPSULE NOT FOR MDS NORDION THERAPY UNITS.
5. MINIMUM ACTIVE LOADING HEIGHT 1.5 cm (0.58 in).
6. "A" DIA. (SOURCE) NOMINAL SHOWN FOR 1.5 TYPE CAPSULE ONLY. FOR OTHER CAPSULE TYPES REFER TO DWG. G132520-101

MDS Nordion
447 March Rd.
Kanata, Ontario Canada K2K 1X8

TITLE
TELETHERAPY O.E.M. SOURCE CAPSULE

REF DWG: G132520-101			REVISED: MAR 2000	
DATE: JUNE 4, 1992			No. XC-325	REV G
DRAWN DMI	CHECKED D.W.	APPROVED A.S.T.	SHT 1 OF 1	

THIS DRAWING IS THE PROPERTY OF MDS NORDION INCORPORATED, AND IS SUBMITTED FOR CONSIDERATION ON THE UNDERSTANDING THAT THERE SHALL BE NO EXPLOITATION OF ANY INFORMATION CONTAINED HEREIN EXCEPT WITH THE SPECIFIC WRITTEN AGREEMENT OF MDS NORDION INCORPORATED.

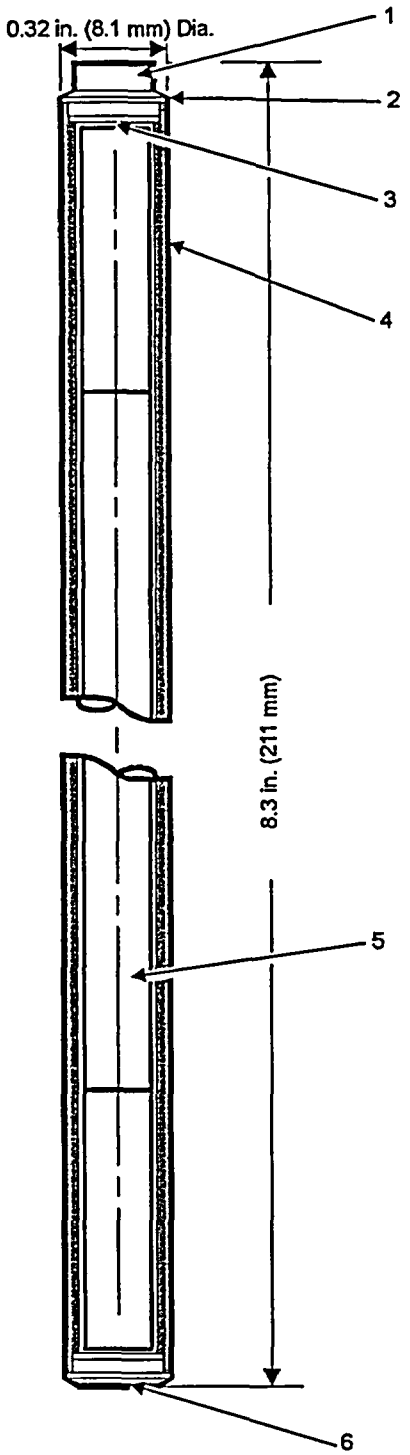

Parts List

1. Top End Plug
2. Inactive fusion weld both ends
3. Void less than 0.13 in. (3.2 mm) when slug loaded. Nominal 1.0 in. (25.4 mm) when pellet loaded.
4. Body wall thickness 0.025 in. (0.64 mm)
5. Cobalt-60 Nickel Plated Pellets or Nickel Plated Slugs
6. End Plug 0.10 in. (2.5 mm) thick with Serial No. engraved (A001 to Z999) See detail below.

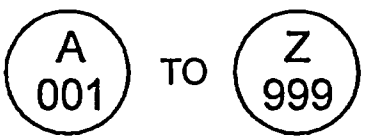

Notes

1. Capsule material: Zircaloy 2 or 4
2. Straightness tolerance less than 0.01 in./ft.
3. Manufactured to MDS Nordion Technical Specification IN/TS 0199 Co60

MDS Nordion

447 March Road, P.O. Box 13500
Kanata, Ontario, Canada, K2K 1X8
Tel: (613) 592-2790 · Fax. (613) 592-6937

THIS DRAWING IS THE PROPERTY OF MDS NORDION INC. AND IS SUBMITTED FOR CONSIDERATION ON THE UNDERSTANDING THAT THERE SHALL BE NO EXPLOITATION OF ANY INFORMATION CONTAINED HEREIN EXCEPT WITH THE SPECIFIC WRITTEN AGREEMENT OF MDS NORDION INC.

TITLE	AC-339 Cobalt 60 Sealed Source		
REF.	Q100303-022 IN/SS 1391 AC339	REVISED Feb 98	DCN A1154-D-01A
DATE	Sep 1984	No. AC-339	ISSUE 3
DRAWN	CHECKED DM	APPROVED MK	SHEET 1 OF 1

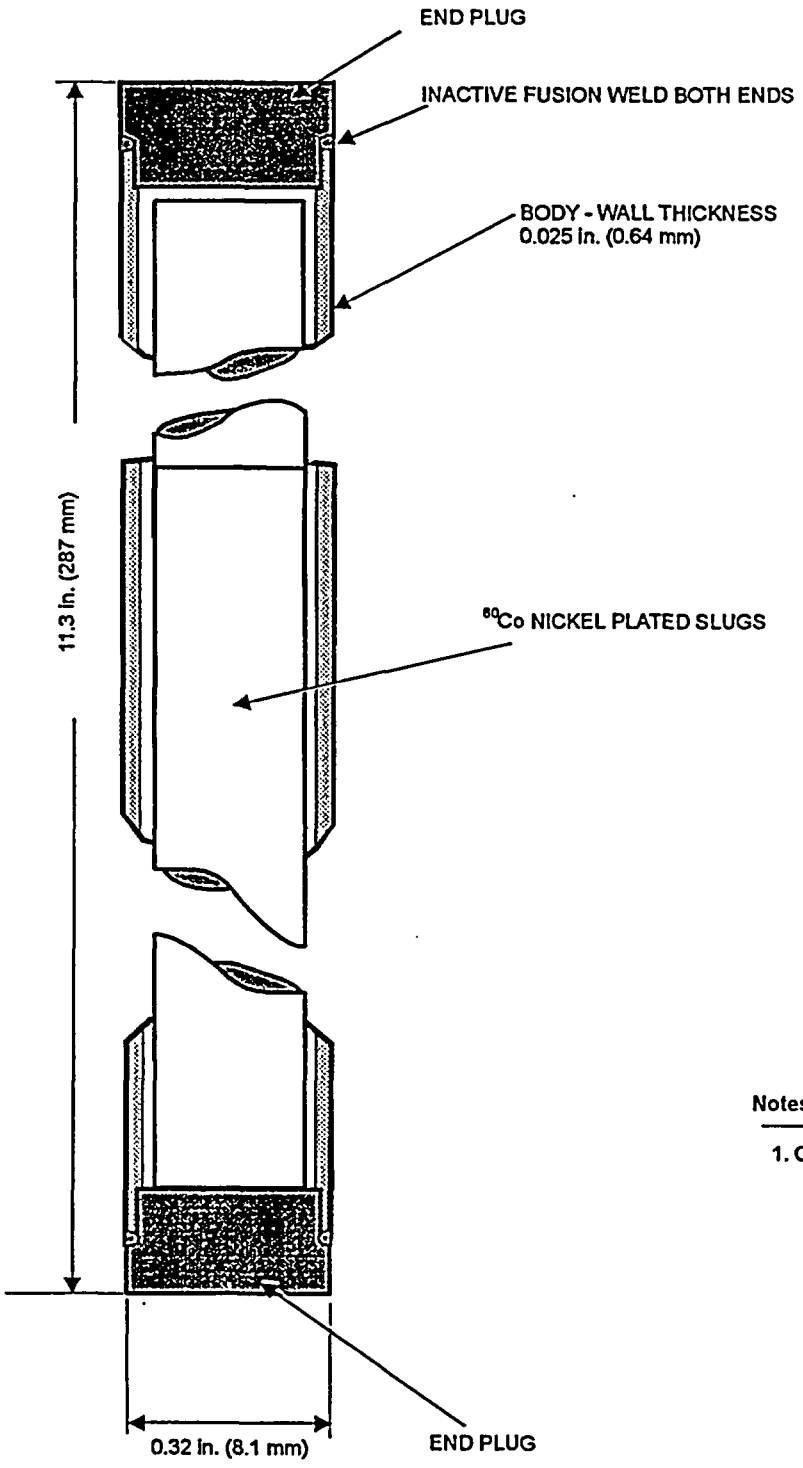

Notes

1. Capsule material: Zircaloy 2 or 4

MDS Nordion

447 March Road, P.O. Box 13500
Kanata, Ontario, Canada, K2K 1X8
Tel: (613) 592-2790 · Fax. (613) 592-6937

THIS DRAWING IS THE PROPERTY OF MDS NORDION INC. AND IS SUBMITTED FOR CONSIDERATION ON THE UNDERSTANDING THAT THERE SHALL BE NO EXPLOITATION OF ANY INFORMATION CONTAINED HEREIN EXCEPT WITH THE SPECIFIC WRITTEN AGREEMENT OF MDS NORDION INC.

TITLE	AC-345 Sealed Source		
REF. G134560201 IN/SS 1392 AC345		REVISED Feb 98	DCN A1154-D-01A
DATE Sep 1984		No. AC-345	ISSUE 3
DRAWN	CHECKED BM	APPROVED MK	SHEET 1 OF 1

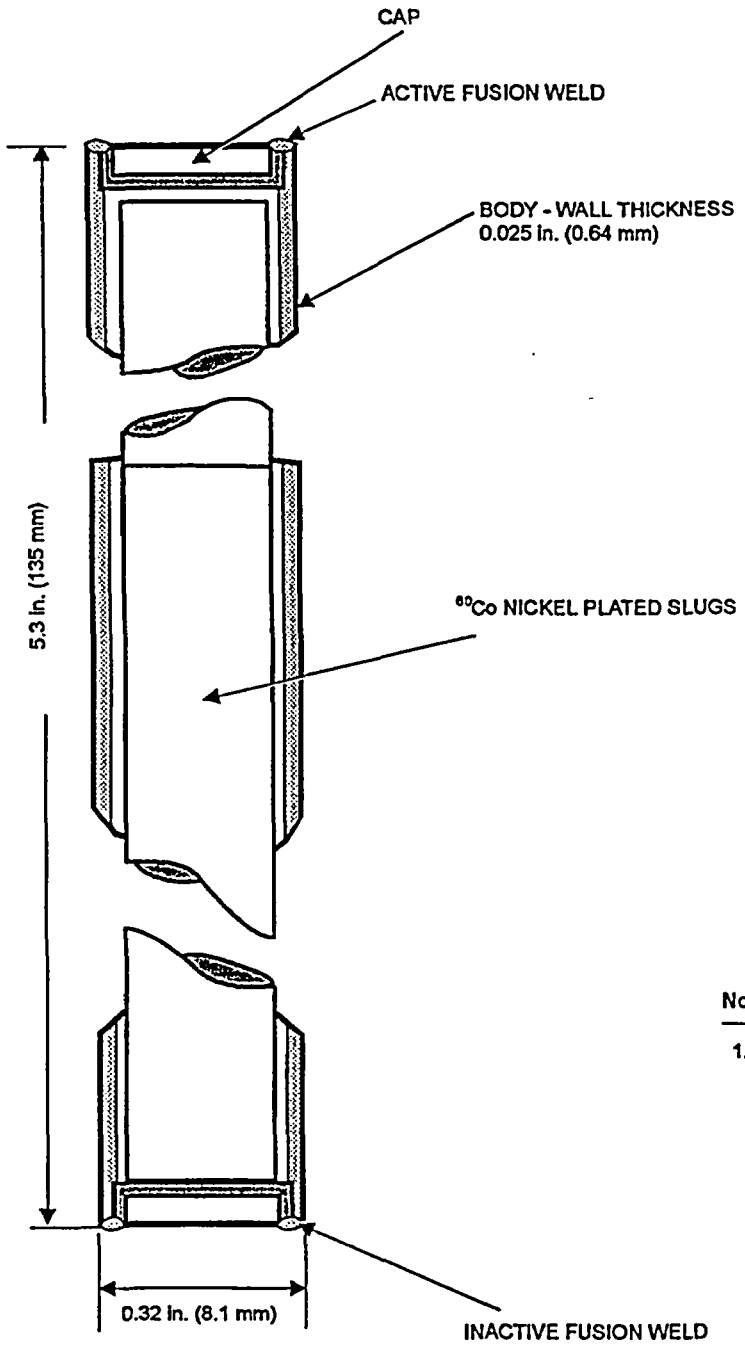

Notes

1. Capsule material: Type 316L Stainless Steel

MDS Nordion

447 March Road, P.O. Box 13500
Kanata, Ontario, Canada, K2K 1X8
Tel: (613) 592-2790 · Fax. (613) 592-6937

THIS DRAWING IS THE PROPERTY OF MDS NORDION INC. AND IS SUBMITTED FOR CONSIDERATION ON THE UNDERSTANDING THAT THERE SHALL BE NO EXPLOITATION OF ANY INFORMATION CONTAINED HEREIN EXCEPT WITH THE SPECIFIC WRITTEN AGREEMENT OF MDS NORDION INC.

TITLE	C-348 Sealed Source		
REF.	G134860201 IN/SS 1390 C348	REVISED Feb 98	DCN A1154-D-01A
DATE	Dec 89	No. C-348	ISSUE 2
DRAWN	CHECKED BM	APPROVED MK	SHEET 1 OF 1

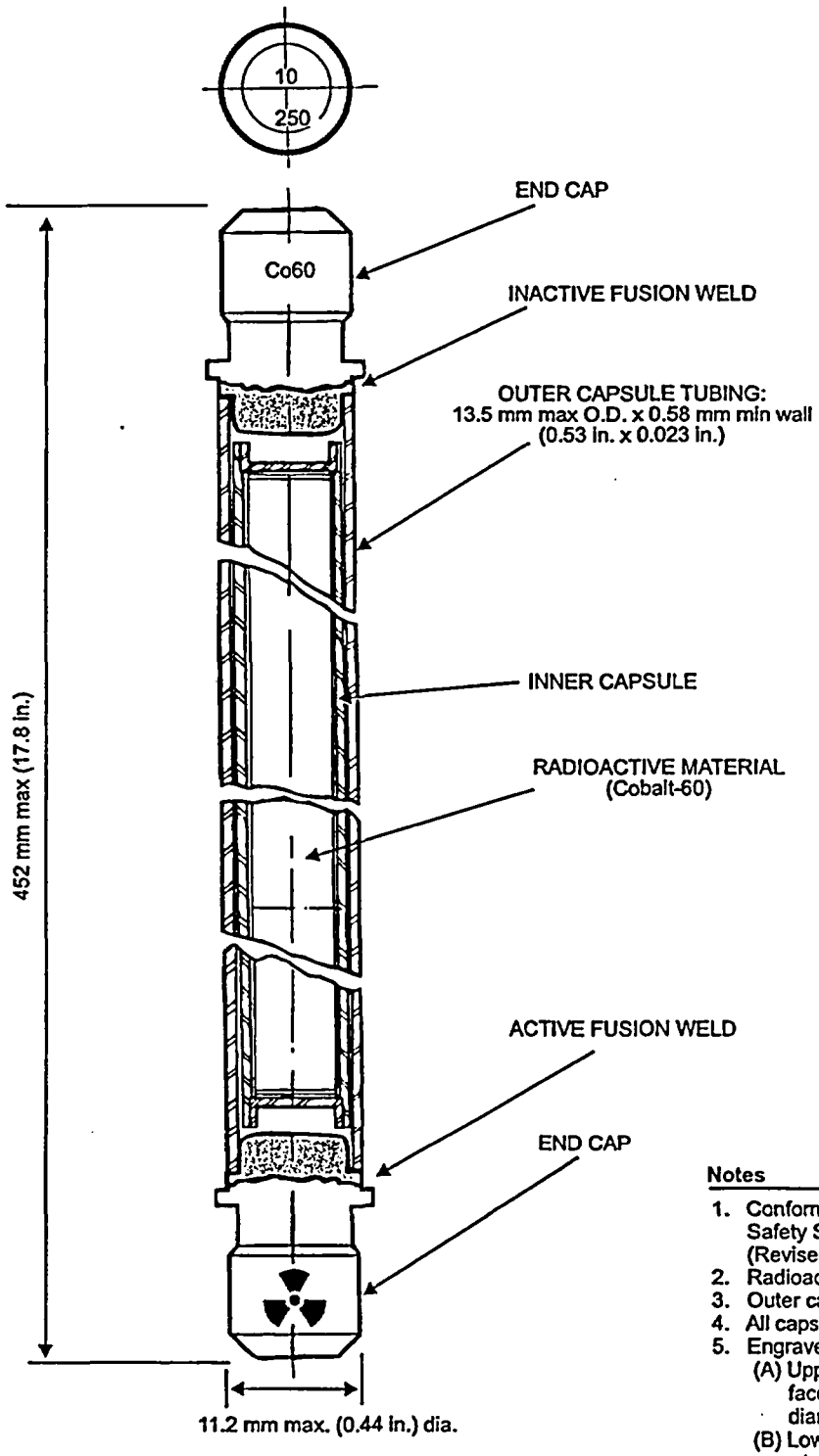

Notes

1. Conforms to Special Form requirements of IAEA Safety Standards Series No. TS-R-1 1996 Edition (Revised), CNSC Certificate No. CDN/0019/S-96.
2. Radioactive Material: Cobalt-60 in solid form.
3. Outer capsule material: Type 316L stainless steel.
4. All capsules are sealed by fusion welds.
5. Engraved on capsule:
   (A) Upper end cap
   face: serial number
   diameter: C442 Co60
   (B) Lower end cap diameter: MDSN X and Trefoil where X is material heat number.

MDS Nordion

447 March Road, P.O. Box 13500
Kanata, Ontario, Canada, K2K 1X8
Tel: (613) 592-2790 · Fax. (613) 592-6937

THIS DRAWING IS THE PROPERTY OF MDS NORDION INC. AND IS SUBMITTED FOR CONSIDERATION ON THE UNDERSTANDING THAT THERE SHALL BE NO EXPLOITATION OF ANY INFORMATION CONTAINED HEREIN EXCEPT WITH THE SPECIFIC WRITTEN AGREEMENT OF MDS NORDION INC.

TITLE	C-442 Sealed Source		
REF. IN/SS 1729 C442 G144202-001		REVISED DEC 02	DCN A-1881-D-08A
DATE FEB 01		No. C-442	ISSUE 3
DRAWN BW	CHECKED JR	APPROVED MK	SHEET 1 OF 1

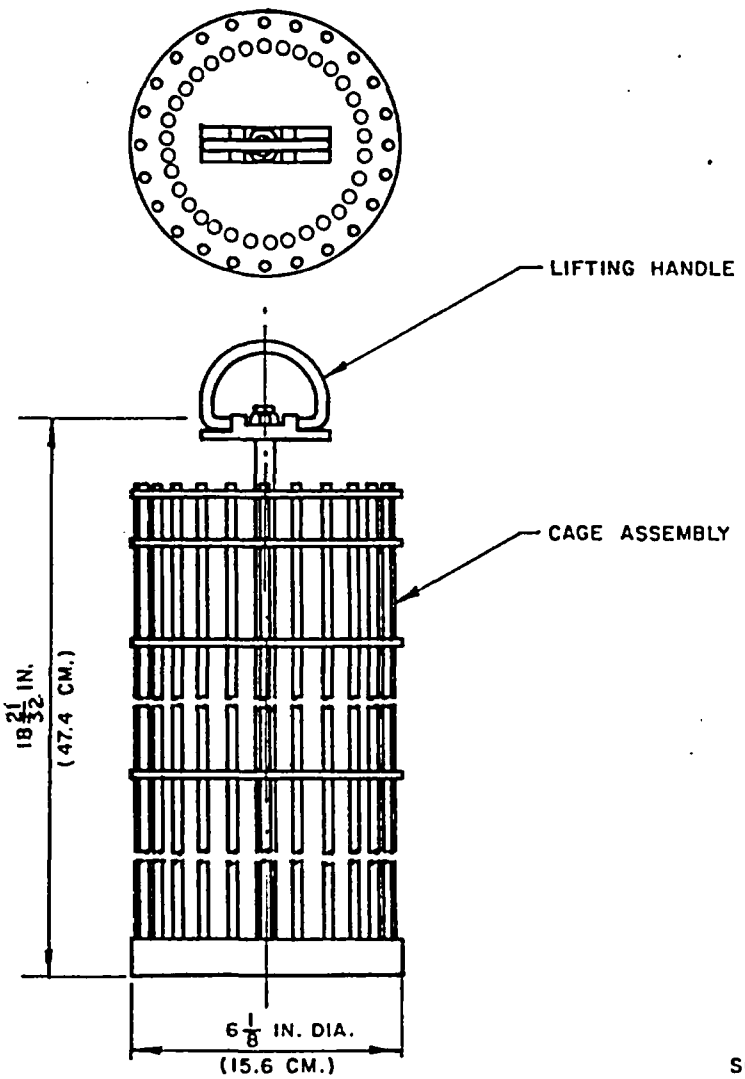

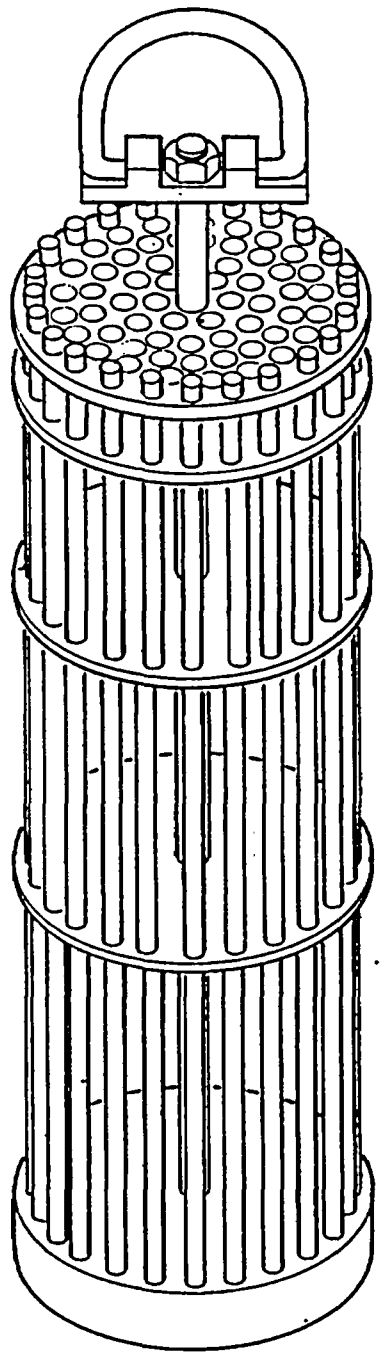

SCALE 1:3
APPROX.

- FOR DRY LOADING ONLY
- SOURCE TYPES C-188 OR EQUIVALENT

MDS Nordion
447 March Road, P.O. Box 13500
Kanata, Ontario, Canada, K2K 1X8
Tel: (613) 592-2790 · Fax. (613) 592-6937

THIS DRAWING IS THE PROPERTY OF MDS NORDION AND IS SUBMITTED FOR CONSIDERATION ON THE UNDERSTANDING THAT THERE SHALL BE NO EXPLOITATION OF ANY INFORMATION CONTINUED HEREIN EXCEPT WITH THE SPECIFIC WRITTEN AGREEMENT OF MDS NORDION

TITLE SOURCE CAPSULE CAGE FOR F-168 SHIPPING CONTAINER				
REF. DWG. CP36-C-363			REVISED 28 SEPTEMBER 76	
DATE 21 MARCH 1967			No. F-170	REV. B
DRAWN J.R.P.	CHECKED	APPROVED	SHEET 1 OF 1	

Notes:

1. Material: Stainless Steel
2. Maximum Capacity: 64 source capsules
3. Used with: F-127 Shipping Container
   F-168 Shipping Container

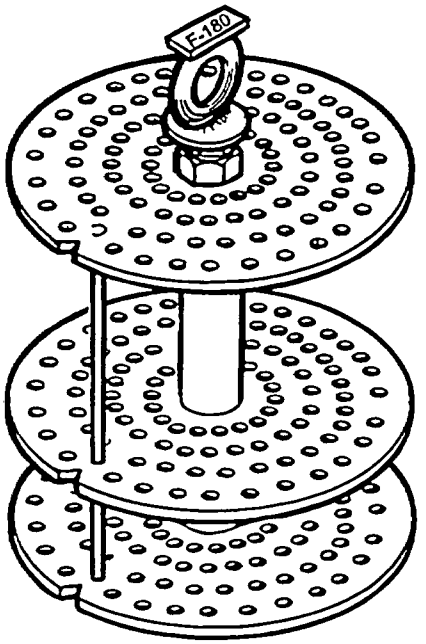

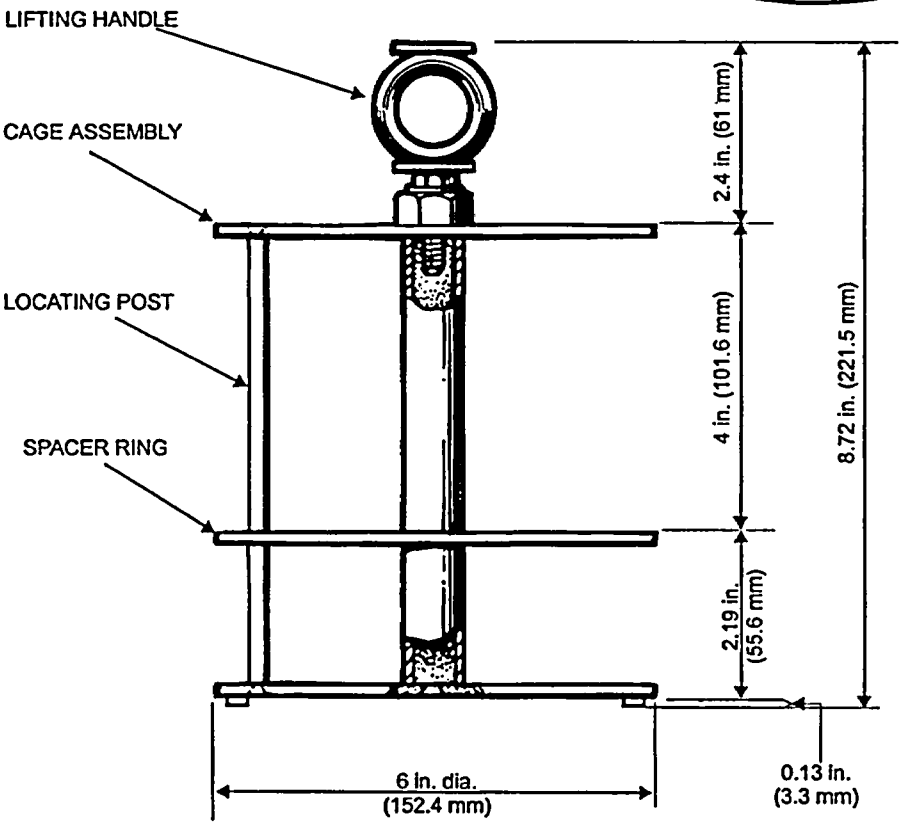

MDS Nordion
447 March Road, P.O. Box 13500
Kanata, Ontario, Canada, K2K 1X8
Tel: (613) 592-2790 · Fax. (613) 592-6937

THIS DRAWING IS THE PROPERTY OF MDS NORDION AND IS SUBMITTED FOR CONSIDERATION ON THE UNDERSTANDING THAT THERE SHALL BE NO EXPLOITATION OF ANY INFORMATION CONTINUED HEREIN EXCEPT WITH THE SPECIFIC WRITTEN AGREEMENT OF MDS NORDION.

TITLE	**Source Capsule Carrier**		
REF.	F118002-001 IN/SS 1240 F180	REVISED Oct 98	DCN A1426-D-02A
DATE	March 1967	No. **F-180**	ISSUE **4**
DRAWN	CHECKED	APPROVED	SHEET 1 OF 1

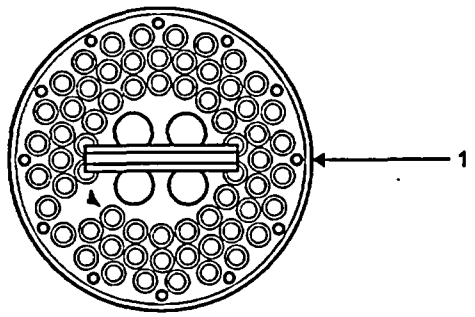

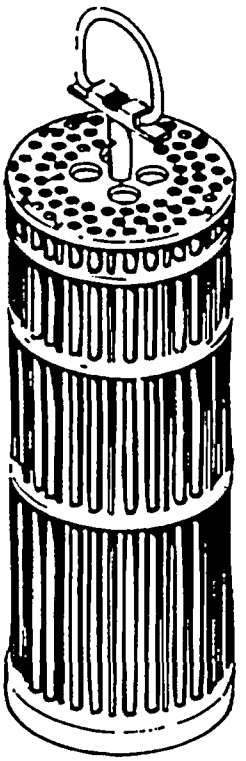

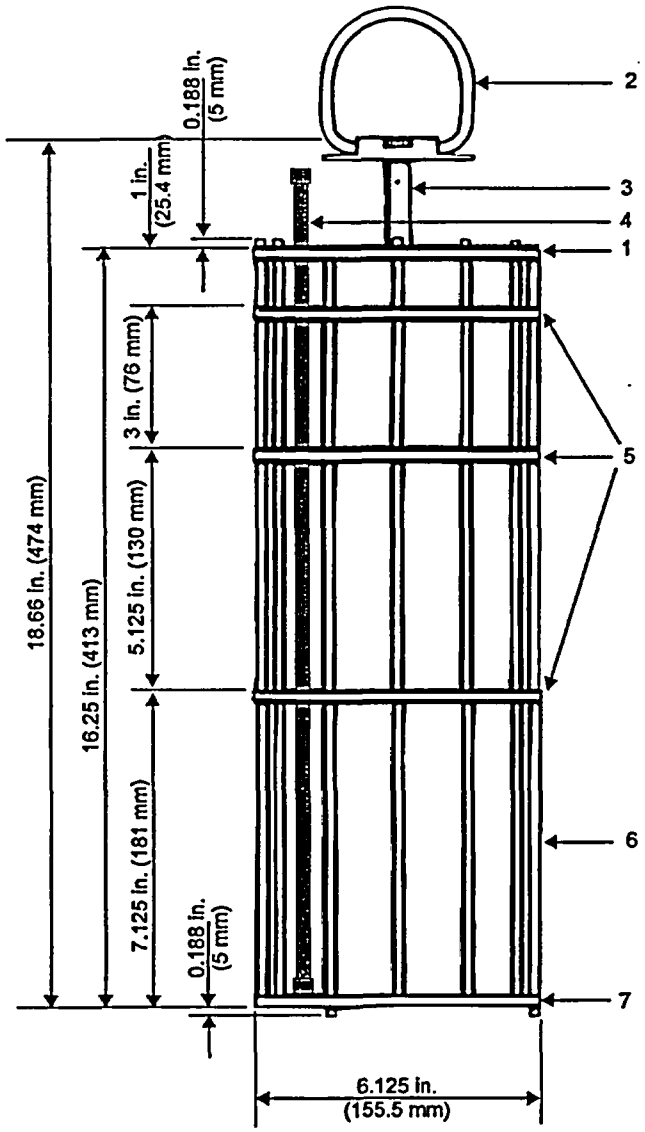

Notes:

1. Material stainless steel 316
2. Welded construction
3. Carrying capacity 64 C-188
4. Used in the F-168 transport packaging
5. Total weight: 9 lbs (4.1 Kg)

Parts List:

1. Top plate 0.25 in. thick (6 mm)
   1st row = 24 holes
   2nd row = 23 holes
   3rd row = 17 holes
   All holes 0.47 in. dia. (12 mm)
2. Swivel type lifting handle 0.25 in diameter (6 mm)
3. Centre post: Above top plate 0.5 in. dia. (13 mm)
   Below top plate 0.25 in. dia. (6 mm)
4. C-188 capsule assembly, ref. drawing A05244
   17.77 in. long (451 mm)
5. Spacer plates: 0.25 in. thick (6 mm)
6. Support rods: 0.25 in. thick (6 mm) [12]
7. Base plate 0.25 in. thick (6 mm)
   1st row = 24 holes 0.256 in. dia. (7 mm)
   2nd, 3rd rows = 24 holes 0.25 in. dia. (6 mm)
   4th row = 18 holes 0.25 in. dia. (6 mm)

MDS Nordion
447 March Road, P.O. Box 13500
Kanata, Ontario, Canada, K2K 1X8
Tel: (613) 592-2790 · Fax. (613) 592-6937

THIS DRAWING IS THE PROPERTY OF MDS NORDION AND IS SUBMITTED FOR CONSIDERATION ON THE UNDERSTANDING THAT THERE SHALL BE NO EXPLOITATION OF ANY INFORMATION CONTINUED HEREIN EXCEPT WITH THE SPECIFIC WRITTEN AGREEMENT OF MDS NORDION.

TITLE

Wet Storage Capsule Cage Assembly

REF.	F102301-001 IN/SS 1239 F234	REVISED Dec 96	DCN A0569-D-01A
DATE	Jan 1974	No. F-234	ISSUE 2
DRAWN	CHECKED	APPROVED	SHEET 1 OF 1

APPENDIX 4:
Quality Assurance Program Documents

[redacted]

APPENDIX 5:
Sample Shipping Documents

1. Straight Bill of Lading
2. Emergency Response Form for the Transportation of Radioactive Materials
3. IMO Dangerous Goods Declaration
4. MDS Nordion Consignor's Certificate
5. Special Stowage Instructions

STRAIGHT BILL OF LADING
ORIGINAL - NOT NEGOTIABLE

CARRIER NAME JADE TRANSPORTATION

SHIPMENT ID NUMBER 66536

FREIGHT BILL PRO NO. CARRIER USE

CARRIER ADDRESS

SCAC DUNS

ect on Delivery shipments the letters

TRAILER / CAR NUMBER

TO:
Consignee LAURENTIDE FWD. INC.
C/O G.T. PRECISION
Street 10000 MAURICE DU PLESSIS
RIVIERE DES PRAIRIES, QUEBEC
Destination (Code)

ROUTE TO BE DELIVERED FEB 21,2002

FROM:
Shipper MDS NORDION
Street 447 MARCH ROAD
OTTAWA, ON CANADA
ZIP Origin K2K 1X8

SPECIAL INSTRUCTIONS
24 HR EMERGENCY RESPONSE CONTACT #
MDS NORDION 613-592-2790

FOR PAYMENT SEND BILL TO:
Name
Street
City

SHIPPER'S INTERNAL DATA
THE PROPERTY IS BEING SHIPPED FOR EXPORT AND THE FREIGHT TRANSPORTATION SERVICE TO BE SUPPLIED BY THE CARRIERS IS PART OF A CONTINUOUS OUTBOUND FREIGHT MOVEMENT IN RESPECT OF THE PROPERTY

SID NO.

#SHIPPING UNITS	H/M	KIND OF PACKAGING, DESCRIPTION OF ARTICLES SPECIAL MARKS AND EXCEPTIONS	WEIGHT	RATE	CHARGES
1		TYPE B(U), 1 CRATE 66536 HEAT FLUX: 605 W/M2 F/168 #57 TOOL BOX #03 "RQ" RADIOACTIVE MATERIAL, TYPE B(U) PACKAGE,7, UN2916 COBALT 60, SPECIAL FORM, 7104.9 TBQ CHEMICAL FORM: ELEMENT PHYSICAL FORM: SOLID F168 #57 TRANSPORT INDEX: 7.0, 7104.9 TBQ RADIOACTIVE YELLOW III AECB CERT. NO. CDN/2063/B(U)-85,REV.5 SPECIAL FORM CERT. CDN/0010/S-85, REV.4 4, CLASS 7 PLACARDS REQUIRED 1 INSTALLATION TOOL BOX	5671 KG		

REMIT C.O.D.
TO
ADDRESS

NOTE - Where the rate is dependent on value, shippers are required to state specifically in writing the agreed or declared value of the property.
The agreed or declared value of the property is hereby specifically stated by shipper to be not exceeding
$ PER KG

COD AMT:$

Subject to Section 7 of conditions. If this shipment is to be delivered to the consignee without recourse on the consignor, the consignor shall sign the following statement.
The carrier shall not make delivery of this shipment without payment of freight and all other lawful charges.

Signature of Consignor

PREPAID [X]
COLLECT [ ]
TOTAL CHARGES $
FREIGHT CHARGES ALL PREPAID UNLESS MARKED COLLECT
CHECK BOX IF COLLECT [ ]

RECEIVED, SUBJECT TO THE CLASSIFICATION AND TARIFF IF OFFERED ON THE DATE OF THE ISSUE OF THIS BILL OF LADING, THE PROPERTY DESCRIBED ABOVE IN APPARENT GOOD ORDER, EXCEPT AS NOTED (CONTENTS AND CONDITION OF CONTENTS OF PACKAGES UNKNOWN) MARKED, CONSIGNED AND DESTINED AS INDICATED ABOVE WHICH SAID CARRIER (THE WORD CARRIER BEING UNDERSTOOD THROUGHOUT THIS CONTRACT AS MEANING ANY PERSON OR CORPORATION IN POSSESSION OF THE PROPERTY UNDER THE CONTRACT) AGREES TO CARRY TO ITS USUAL PLACE OF DELIVERY OF SAID DESTINATION, IN ON ITS ROUTE, OTHERWISE TO DELIVER TO ANOTHER CARRIER ON THE ROUTE TO SAID DESTINATION IT IS MUTUALLY AGREED AS TO EACH CARRIER OF ALL OR ANY OF SAID PROPERTY OVER ALL OR ANY PORTION OF SAID ROUTE TO DESTINATION AND AS TO EACH PARTY AT ANY TIME INTERESTED IN ALL OR SAID PROPERTY, THAT EVERY SERVICE IN THE PERFORMED HEREUNDER SHALL BE SUBJECT TO ALL THE BILL OF LADING TERMS AND CONDITIONS IN THE GOVERNING CLASSIFICATION ON THE DATE OF SHIPMENT SHIPPER HEREBY CERTIFIES THAT HE IS FAMILAR WITH ALL THE BILL OF LADING TERMS AND CONDITIONS IN THE GOVERNING CLASSIFICATION AND SAID TERMS AND CONDITIONS ARE HEREBY AGREED BY THE SHIPPER AND ACCEPTED BY HIMSELF AND ASSIGNS

This is to certify that the above named materials are properly classified, described, packaged, marked and labeled and are in proper condition for transportation, according to the applicable regulations of the Department of Transportation.

PER S NORDION	CARRIER JADE TRANSPORTATION
PER	PER DATE FEB 21, 2002

* MARK WITH X OR RQ IF APPROPRIATE TO DESIGNATE HAZARDOUS MATERIALS OR HAZARDOUS SUBSTANCES AS DEFINED IN THE DEPARTMENT OF TRANSPORTATION REGUALTIONS GVERNING THE TRANSPORTATION OF HAZARDOUS MATERIALS. THE USE OF THIS COLUMN IS AN OPTIONAL METHOD FOR IDENTIFYING HAZARDOUS MATERIALS ON BILLS OF LADING PER SECTION 172.201 (A) (1) (iii) OF TITLE 49 CODE OF FEDERAL REGULATIONS. ALSO, WHEN SHIPPING HAZARDOUS MATERIALS THE SHIPPER'S CERTIFICATION STATEMENT PRESCRIBED IN SECTION 172.204(A) OF THE FEDERAL REGUALTIONS MUST BE INDICATED ON THE BILL OF LADING, UNLESS A SPECIFIC EXCEPTION FROM THIS REQUIREMENT IS PROVIDED IN THE REGULATIONS FOR A PARTICULAR MATERIAL.

EMERGENCY RESPONSE FORM
FOR THE TRANSPORTATION OF RADIOACTIVE MATERIALS

Placard Notation: RADIOACTIVE (CLASS 7)

Undeliverable Consignments: Store in a safe place and contact MDS Nordion and the appropriate authorities for further instructions

POTENTIAL HAZARDS

HEALTH: Radiation hazard may be internal due to breathing vapor or dust, or contamination of skin, open cuts, etc. Radiation hazard may be external (like x-rays) from contamination on skin or exposure to unshielded material. Prolonged exposure may be a threat to health or life. Effects of radiation may be delayed.

EMERGENCY ACTION

Keep unnecessary people away. Keep upwind, isolate hazard area (at least 50 meters) - 164 ft.). Wear self-contained breathing apparatus and full protective clothing. Delay cleanup until arrival of qualified radiation monitoring assistance.

FIRE:
Small fire: Dry Chemical or CO_2
Large fires: Foam or Water
Fight fire from maximum distance. Move undamaged packages from fire area if without risk. Do NOT move damaged packages.

SPILL OR LEAK:
1) Do not touch spilled material or leaking or damaged packages.
2) Small Spills: If it can be performed quickly, limit the spread of the spill by using earth or other non combustible absorbent material.
3) Large Spills: Dike for later decontamination and disposal. Do not enter the spill area unless absolutely necessary to save life. Limit entries to shortest possible time. Alternate the entry of personnel, if possible.

FIRST AID: Call physician. Use standard first aid procedures. Remove contaminated clothing and shower with soap and water. Advise rescue personnel and physicians that person or equipment may be radioactively contaminated.

EMERGENCY - TELEPHONE

IN CANADA:
1. Local Police
2. MDS Nordion 1-613-592-2790 (24 hours)

IN USA:
1. State Police or Local Authorities
2. MDS Nordion 1-613-592-2790 (24 hours)
3. National Response Centre 1-800-424-8802

OVERSEAS:
1. Civil Authorities
2. MDS Nordion (International Access Code) 613-592-2790 (24 hours)

IMO DANGEROUS GOODS DECLARATION

This form meets the requirements of SOLAS '74 chapter VII, reoulation 5:
MARPOL 73/78 Annex III, regulation 4 and the IMDG Code, chapter 5.4.

1 Shipper
MDS NORDION
447 March Road,
Kanata - Ottawa, Ontario, Canada K2K 1X8

2 Reference number(s)
PS66517
LFI 6896

3 Consignee
ISOTRON Sterilisation Malaysia SDN BHD,
Plot 203, Kuala Ketil Ind. Estate,
09300 Kuala Ketil, Kedah, Malaysia

4 Carrier
APL
Export Booking: 083 212 952

Container packing certificate/vehicle declaration
DECLARATION:
It is declared that the packing of the goods into the unit has been carried out in accordance with the provisions of 5.4.2.1 of the IMDG Code
TO BE COMPLETED FOR SHIPMENTS IN CONTAINERS OR VEHICLES

5 Name/status, company/organization of signatory
LFI Laurentide Forwarders (Cda) Inc.

Place and date
Montreal, Que. - January 30, 2002

Signature on behalf of packer
D. Hamm

6 Ship's name and voyage No. APL ENGLAND V108
Port of loading OAKLAND, CA.

7 (Reserved for text, instructions or other matter)
"KEEP SEPARATED' FROM FOODSTUFFS

8 Port of discharge
PENANG

9

Marks & Nos. If applicable, identification or registration number(s) of the unit	Number and kind of packages, proper shipping name*, IMO hazard class/division, UN number, packaging group (where assigned)**, flashpoint (in °C c.c.)**, control and emergency temperatures**, identification of the goods as MARINE POLLUTANT**,	Gross mass (kg), net quantity/mass**
TRLU902728-9 Seal: DML-GT21335	1 x 20ft Open Top Container / Tarp Removed / stc 1 Case: RQ Radioactive material, Type B(U) Package, Class 7, UN2916, Radioisotope: Cobalt 60, Highway Route Controlled Quantity, Special Form, Activity: 7108.5TBq, Readings at Surface: 0.52mSV/HR Readings at 1 Meter: 0.06mSV/HR - Transport Index: 6.0, Category Radioactive Yellow III, Type of Packg: 1xB(U) - Packg. I.D.: F168(85) - Serial # 55 Heat Flux of Package: 605 W/M2, Special Form Certificate CDN/0010/S-85,(Rev.4) - B(U) Certificate CDN/2063/B(U)-85,(Rev.5) and U.S. Certificate USA/0461/B(U)-85,(Rev.5)	5445 Kgs 1820 Grams Net

Goods delivered as:
- ☐ Breakbulk cargo
- ☑ Unitized cargo
- ☐ Bulk packages

Type of unit (container, trailer, tank vehicle, etc.)
- ☑ Open
- ☐ Closed

Insert "X" in appropriate box

(This column may be left empty apart from the heading, in which case insert appropriate description)

24HR EMERGENCY PHONE NOS:
in Canada: MDS NORDION: 1-613-592-2790
in USA: National Response Centre 1-800-424-8802 (for MDS Nordion)
Overseas: Civil Authorities and MDS Nordion (International Access Code) 613-592-2790

* Synonyms should not be used. Proprietary/trade names alone are not sufficient.
If applicable: (1) the word "WASTE" should precede the name;
(2) "EMPTY UNCLEANED" or "RESIDUE - LAST CONTAINED" should be added;
(3) "LIMITED QUANTITY" should be added.

Ems No. 7.01
MFAG Table 7.4

The IMDG code page number should not appear on this form.

10 ADDITIONAL INFORMATION in certain circumstances special information/certificates are required, see IMDG Code,
Operational Requirement: Container Tarp Removed to Allow for Adequate Heat Dissipation.....

DECLARATION

I hereby declare that the contents of this consignment are fully and accurately described above by the proper shipping name(s), and are classified, packaged, marked and labelled/placarded, and are in all respects in proper condition for transport according to applicable international and national governmental regulations.

11 Name/status, company/organization of signatory
MDS Nordion

Place and date
Ottawa, Ontario- Jan. 28, 2002

Signature on behalf of shipper
Barbara Englehart, CITT Logistics Specialist
BEnglehart

447 March Road
Kanata, Ontario
Canada K2K 1X8
Tel: 613 592-2700

MDS Nordion
Science Advancing Health

CONSIGNOR'S CERTIFICATE

(IAEA SAFETY SERIES 6, 1985 REVISED EDITION)

"I hereby declare that the contents of this consignment are fully and accurately described by the proper shipping name and are classified, packed, marked and labelled, and are in all respects in proper condition for transport according to the applicable international and national governmental regulations."

PARTICULARS OF CONSIGNMENT:

A) "RADIOACTIVE MATERIAL, SPECIAL FORM, N.O.S.

B) UNITED NATIONS CLASS NUMBER 7

C) UNITED NATIONS NUMBER 2916

D) NAME OF RADIONUCLIDE: COBALT 60

E) DESCRIPTION: CHEMCIAL FORM: ELEMENT
PHYSICAL FORM: SOLID

F) ACTIVITY IN Tbq: TOTAL 7104.9 TBQ (192,024 CURIES)
F-168 (1985) #57 7104.9 TBQ (192,024 curies)

G) CATEGORY OF PACKAGE: RADIOACTIVE YELLOW III

H) TRANSPORT INDEX: F-168 (1985) #57 0.07 mSv/h (7.0 mR/h)

I) RADIATION AT SURFACE: F-168 (1985) #57: 1.10 mSv/h (110 mR/h)

J) NON-FISSILE MATERIAL

K) COMPETENT AUTHORITY CERTIFICATE CDN/2063/B(U)-85, Rev.5,
USA/0461/B(U)-85, Rev.5
SPECIAL FORM CERT. CDN/0010/S-85, Rev.4

FOR CARRIAGE OF GOODS BY SEA:
IMCO CLASS 7, SCHEDULE 10, IMDG CODE (AMDT. 30-00) PAGE 231.

MDS NORDION

PER B. Berghaert.....

SPECIAL STOWAGE INSTRUCTIONS FOR RADIOACTIVE MATERIAL PACKAGES
- ALL MODES OF TRANSPORT -

DIRECTIVES SPÉCIALES POUR L'ARRIMAGE DE COLIS DE MATIÈRES RADIOACTIVES
- TOUS LES MOYENS DE TRANSPORT -

SEE PART A ☐ *VOIR PARTIE A* SEE PART B ☐ *VOIR PARTIE B*

CAUTION - HEAT EMITTER
DO NOT STORE IN INSULATED OR REFRIGERATED CONTAINER OR OTHER INSULATED SPACE

ATTENTION - ÉMETTEUR DE CHALEUR
NE PAS PLACER DANS UN CONTENEUR ISOLÉ OU RÉFRIGÉRÉ OU DANS UN EMPLACEMENT ISOLÉ

PART A / *PARTIE A*

MDS NORDION
CONTAINER/*CONTENEURS*

			F-143		F-147		F-158		GB-150		GB-650		GC-220		
					T-780C		PHOENIX		T1000		ELITE 80		ELITE 100		

CUSTOMERS CONTAINERS/*CONTENEURS DU CLIENT*

			SIEMENS (S1747)		PHILIPS F-87		PHILIPS F-96				

☐ TO MASTER OF VESSEL/*À L'INTENTION DU MAÎTRE DE NAVIRE*

WHENEVER POSSIBLE STOW THE CONTAINERS ON DECK.
ENTREPOSER LES CONTENEURS SUR LE PONT AUTANT QUE POSSIBLE.

IF STOWED BELOW DECK DO NOT PLACE OTHER CARGO WITHIN 61 CENTIMETRES (2 FEET) OF EACH CONTAINER.
SI LES CONTENEURS SONT ENTREPOSÉS SOUS LE PONT, NE PAS PLACER LES AUTRES MARCHANDISES À MOINS DE 61 CENTIMÈTRES (2 PIEDS) DE CHAQUE CONTENEUR.

☐ ROAD, RAIL, AIRCRAFT/*TRANSPORT ROUTIER, FERROVIAIRE, AÉRIEN*

DO NOT PLACE OTHER CARGO WITHIN 61 CENTIMETRES (2 FEET) OF EACH CONTAINER.
NE PAS PLACER D'AUTRES MARCHANDISES À MOINS DE 61 CENTIMÈTRES (2 PIEDS) DE CHAQUE CONTENEUR.

PART B / *PARTIE B*

MDS NORDION
CONTAINERS/*CONTENEURS*

	F-127		F-127X		F-168		F-168X		F-144		F-156		F-231		F-294

CUSTOMERS CONTAINERS/*CONTENEURS DU CLIENT*

☐ TO MASTER OF VESSEL/*À L'INTENTION DU MAÎTRE DE NAVIRE*

WHENEVER POSSIBLE STOW THE CONTAINERS ON DECK.
ENTREPOSER LES CONTENEURS SUR LE PONT AUTANT QUE POSSIBLE.

IF STOWED BELOW DECK DO NOT PLACE OTHER CARGO WITHIN 1.52 METRES (5 FEET) OF EACH CONTAINER.
SI LES CONTENEURS SONT ENTREPOSÉS SOUS LE PONT, NE PAS PLACER LES AUTRES MARCHANDISES À MOINS DE 1,52 MÈTRES (5 PIEDS) DE CHAQUE CONTENEUR.

☐ ROAD, RAIL, AIRCRAFT/*TRANSPORT ROUTIER, FERROVIAIRE, AÉRIEN*

DO NOT PLACE OTHER CARGO WITHIN 1.52 METRES (5 FEET) OF EACH CONTAINER.
NE PAS PLACER D'AUTRES MARCHANDISES À MOINS DE 1,52 MÈTRES (5 PIEDS) DE CHAQUE CONTENEUR.

P/N# 2L00465

APPENDIX 6:
Simulation of IAEA Thermal Test Requirements

APPENDIX 7:
Thermal Test

References for Appendix 7

1. IAEA SS6 Regulations for the Safe Transport of Radioactive Materials, 1985 Edition, Supplement 1988.
4. IAEA SS6 Regulations for the Safe Transport of Radioactive Materials, 1973 Revised Edition (As Amended), IAEA Vienna 1979 STI/PUB/527.
46. Metallurgical Investigation Report No. 79-2 Reision 1, Nov. 12, 1982 by J. Culbertson.

APPENDIX 8:
Lifting and Tie-down Analysis

References for Appendix 8

1. IAEA SS6 Regulations for the Safe Transport of Radioactive Materials, 1985 Edition, Supplement 1988.
10. RDT Standard F-8-11T "Fuel Shipping Container Tie-down for Truck Transport", January 1975.
11. 10 CFR 71 "Packaging of Radioactive Material for Transport and Transportation of Radioactive Materials Under Certain Conditions".
17. AECB Transport Certificate CDN/2045/B(U) (Rev. 11).
20. V. Faires, Design of Machine Elements, 4th Edition, McMillan Co.
21. R.J. Roark, Stresses and Deflections in Thin Shells and Curved Plates due to concentrated and variously distributed loading NACA TN806, Washington, D.C. (May 1941).
22. CISC – Handbook of Steel Construction, Edition 2, 1974.
40. Engineering Design by J.H. Faupel and F.E. Fisher, 2nd Edition, Wiley-Interscience, 1981.

APPENDIX 6.1

LIFTING ANALYSIS

TABLE OF CONTENTS

APPENDIX 6.1

		Page
1.	INTRODUCTION	A6.1.5
2.	LIFTING LUG	A6.1.5
3.	CASE 1 : F-168 NORMAL LIFTING ARRANGEMENT (2 LIFT LUGS)	A6.1.7
	3.1 Estimate of Forces on Lift Lug	A6.1.7
	3.2 Failure Modes	A6.1.7
	3.3 Stresses in the Lift Lug	A6.1.8
	3.3.1 Pure Tension due to F1	A6.1.8
	3.3.2 Shackle Pin Tears out of the Eye of the Lift Lug	A6.1.9
	3.3.3 Bearing Failure of the Eye of the Lift Lug	A6.1.10
	3.4 Stresses in the Cylindrical Shell (Steel Jacket)	A6.1.10
	3.4.1 Stresses in the Cylindrical Shell	A6.1.11
	3.4.2 Stresses in the Cylindrical Shell Under the Lift Lug	A6.1.12
	3.5 Stresses in the Weldment (lug/cylinder)	A6.1.16
	3.5.1 Stresses in the Weldment, Ignoring Bending Moment Consideration	A6.1.16
	3.5.2 Stresses in the Weldment, Inclusive of Bending Moment Consideration	A6.1.17
	3.6 Summary of Stresses	A6.1.20
4.	CASE 2 : F-168 SNATCH LIFTING ARRANGEMENT (2 LIFT LUGS)	A6.1.21
	4.1 Estimate of Forces on Lift Lug	A6.1.21
	4.2 Failure Modes	A6.1.23
	4.3 Stresses in the Lift Lug	A6.1.23
	4.4 Stresses in the Cylindrical Shell (Steel Jacket)	A6.1.24
	4.5 Stresses in the Weldment (Lug/Cylinder)	A6.1.24
	4.6 Summary of Stresses	A6.1.25
5.	CASE 3 : F-168 SNATCH LIFTING ARRANGEMENT (1 LIFT LUG)	A6.1.27
	5.1 Estimate of Forces on Lift Lug	A6.1.27
	5.2 Failure Modes	A6.1.29
	5.3 Stresses in the Lift Lug	A6.1.29
	5.4 Stresses in the Cylindrical Shell (Steel Jacket)	A6.1.30
	5.4.1 Stresses in the Cylindrical Shell	A6.1.30
	5.4.2 Stresses in the Cylindrical Shell Under the Lift Lug	A6.1.31

TABLE OF CONTENTS CONT'D

PAGE

5.5 Stresses in the Weldment (lug/cylinder) A6.1.32
5.5.1 Stresses in the Weldment, Ignoring Bending Moment Consideration A6.1.32
5.5.2 Stresses in the Weldment, Inclusive of Bending Moment Consideration A6.1.33
5.6 Summary of Stresses A6.1.34

6. CONCLUSION A6.1.35

LIST OF FIGURES

Figure No.	Title	Page
A6.1.1	F-168 Normal Lifting Arrangement (2 lift lugs).....	A6.1.6
A6.1.2	F-168 Snatch Lifting Arrangement (2 lift lugs).....	A6.1.22
A6.1.3	F-168 Snatch Lifting Arrangement (1 lift lug).....	A6.1.28
A6.1.4	Lift Lug in Pure Tension	A6.1.8
A6.1.5	Lift Lug - Shear Tearout Failure	A6.1.9
A6.1.6	Detail of Lug/Jacket Connection	A6.1.10
A6.1.7	Stresses in the Shell, Under the Lifting Lug	A6.1.12
A6.1.8	Data Page Appended from Engineering Design Ref. (40)	A6.1.15
A6.1.9	Weldment - Lug/Container Details	A6.1.16
A6.1.10	Weld Geometry of Lug/Jacket	A6.1.17
A6.1.11	Data Page from CISC Handbook	A6.1.19
A6.1.12	Data Page from CISC Handbook	A6.1.19
A6.1.13	Lift Lug Fin Dimensions	A6.1.36

LIST OF TABLES

Table Number	Title	Page
A6.1.1	Stresses and Safety Factors in the Lift Lug Assembly Under NORMAL Lifting of F-168 Container	A6.1.20
A6.1.2	Stresses and Safety Factors in the Lift Lug Assembly Under SNATCH Lifting (2 lift lugs) of F-168 Container	A6.1.26
A6.1.3	Stresses and Safety Factors in the Lift Lug Assembly Under SNATCH Lifting (1 lift lug) of F-168 Container	A6.1.34

1.0 INTRODUCTION

In normal configuration, F-168 container is lifted by use of lifting slings which are attached to 2 lifting lugs of the container (See Fig. A6.1.1 - Normal Lifting Arrangement).

The F-168 container may be lifted, under snatch load conditions, by use of either 2 lift lugs or 1 lift lug (See Fig. A6.1.2 and Fig. A6.1.3).

All 3 cases are analyzed herein to arrive at safety factors that exist under normal and snatch load conditions.

Paragraph 506 of the Ref. (1) does not specify any specific safety factors. However, USNRC Title 10 CFR 71.31.2 (Reference 11) requires that the lifting arrangement be capable of supporting three times the package weight without inducing a stress in any member in excess of its yield strength.

The snatch load is based on 3 times the weight of the package because of the fact:

(i) For repeated load, applied in one direction only (mild shock), the recommended factor of safety, for ductile materials like steel, is 3 [Ref. (20)].

Lift Lug Fin - Drawing Number F116802026.

2.0 LIFTING LUG, WELDMENT PROPERTIES

2.1 The lifting lug is as per Drawing F116802026.

The material of lift lug is ASTM A36.

The material properties of ASTM A36 are as follows:

UTS = 58,000 - 80,000 psi
YS = 36,000 psi

2.2 The weld material is Electrode E7014.

The material properties of weld electrode 7014 are as follows:

UTS = 70,000 psi.

2.3 In absence of ultimate shear stress and yield stress in shear material property values, the following conversion factor is employed:

Ultimate shear stress	=	0.75 UTS
Y.S. (in shear)	=	0.6 Y.S. (in tension)

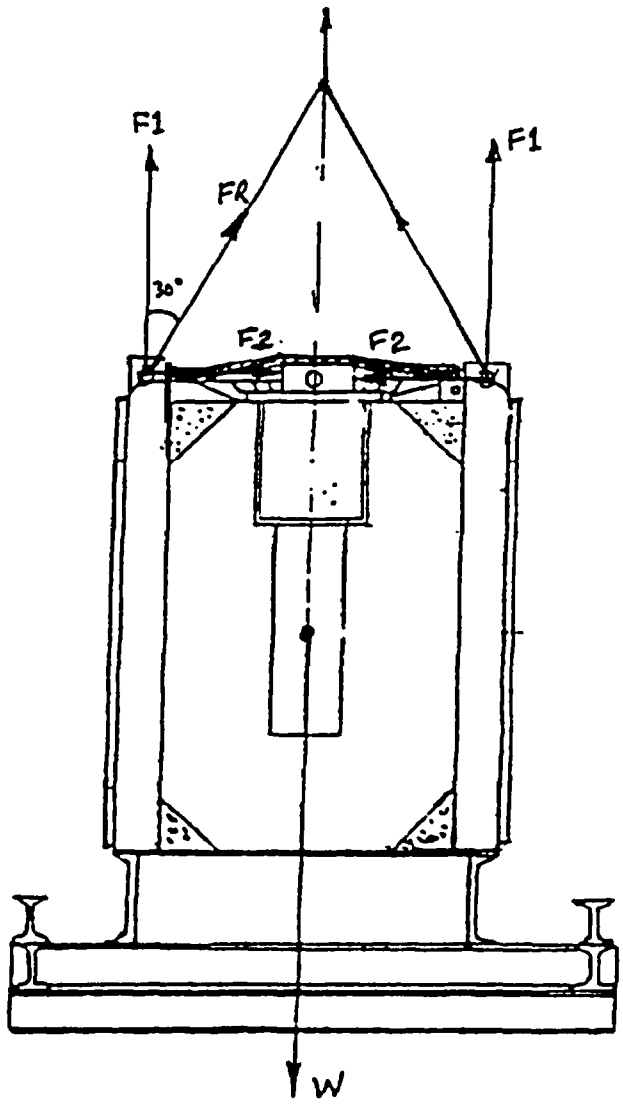

FIGURE A6.1.1

F-168 CONTAINER
NORMAL LIFTING ARRANGEMENT (2 LIFT LUGS)

3. CASE 1 : F-168 NORMAL LIFTING ARRANGEMENT (2 LIFT LUGS)

3.1 Estimate of Forces on the Lift Lug

The total weight of F-168 package without the heat screen is W = 11,900 lbs; the total weight of F-168 package with the heat screen is W = 12,000 lbs; In normal mode, the F-168 package is lifted by use of lifting slings attached to 2 lifting lugs (See Fig. A6.1.1). The tension is taken up by the lifting lugs via shackle or hook used to lift the container.

Normal Load : W = 12,000

Estimate Forces - Resolve Vertically.

$$2F1 = W$$
$$F1 = 0.5\ W$$
$$F1 = 0.5 \times 12{,}000$$
$$F1 = 6{,}000 \text{ lbs}$$

Also $F1 = FR \cos 30^\circ$
$$FR = F1/\cos 30^\circ$$
$$= 6{,}000/.866$$
$$= 6{,}928 \text{ lbs.}$$

$$F2 = FR \sin 30^\circ$$
$$= 6{,}928 \times 0.5$$
$$= 3{,}464 \text{ lbs}$$

3.2 The F-168 container could possibly fail in the following modes:

1 a) Shackle pin tears out of the eye of the lift lug
  b) Parent material of the lift lug fails
2 Parent material of the container shell fails
3 Weld lug to container fails.

Therefore, 3 subcomponents

1) Lift Lug Fin
2) Container Cylindrical Shell
3) Weldment (container/lug)

will be analyzed herein.

The lifting sling - cable, clips, shackle - are made from standard trade items and have well established safety factors. (See attached page at end of this appendix). Therefore the lifting sling components will not be analyzed herein.

3.3 Stresses in the lift lug

3.3.1 Pure Tension due to F1

See Fig. A6.1.4

$$\sigma \cdot = \frac{F1}{\text{Min. Stress Area Under Tension Around the Eye}}$$

$$= \frac{6{,}000}{0.75 \times (1 + 1)}$$

$$= 4000 \text{ psi}$$

$$\text{The Safety Factor} = \frac{\text{Allowable Stress}}{\text{Applied Stress}}$$

$$= \frac{\text{Yield Stress of Lug Material}}{\text{Applied Stress}}$$

$$= \frac{36000}{4000}$$

$$= 9.$$

Stress concentration effects are not considered in this calculation.

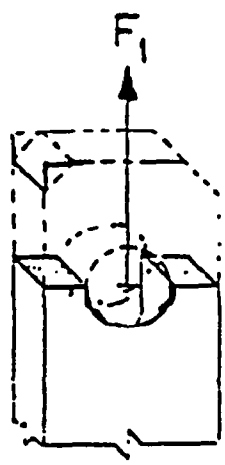

FIGURE A6.1.4

LIFT LUG IN PURE TENSION

3.3.2 Shackle pin tears out of the eye

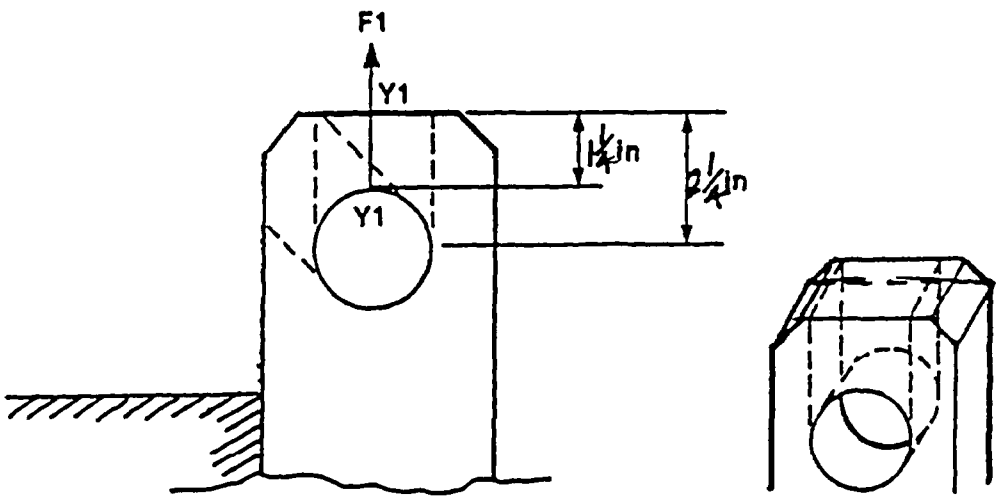

FIGURE A6.1.5

LIFT LUG - SHEAR TEAROUT FAILURE

Shear Tearout Stress

$$\tau = \frac{F1}{\text{Shear Area for tear out}}$$

$$= \frac{6{,}000}{(2.25 \times 0.75 + 2.25 \times 0.75)}$$

$$= 1778 \text{ psi}$$

$$S\text{-}F = \frac{\text{Allowable Stress}}{\text{Applied Stress}} = \frac{0.6 \times \text{Yield Stress}}{\text{Applied Stress}}$$

$$= \frac{0.6 \times 36000}{1778}$$

$$= 12.1$$

3.3.3 Bearing Failure of the Eye

Bearing Stress of the material

$\sigma_b = \frac{FR}{t \times d}$ where t = thickness of fin = 0.75
d = dia. of shackle pin = 1.5

$= \frac{6466}{0.75 \times 1.5}$

= 6158 psi

$SF = \frac{\text{Allowable Stress}}{\text{Applied Stress}} = \frac{36000}{6158}$

= 5.8

3.4 Stresses in the Cylindrical Shell (Steel Jacket)

To determine the strength of the steel jacket of the flask proper (body):

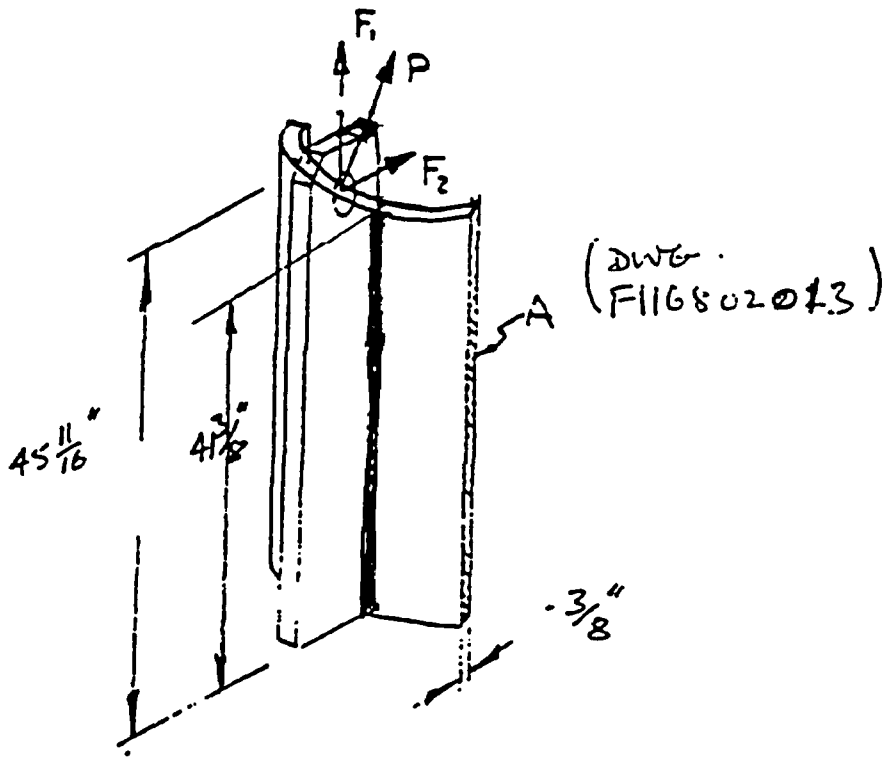

FIGURE A6.1.6
DETAIL OF LUG/JACKET CONNECTION

3.4.1 <u>Stresses in the cylindrical shell</u> (See Fig. A6.1.6)

Double shear area A = (0.375 x 41.375) = (15.51 in^2) x 2 Longitudinal shear stress is:

$$\tau = \frac{F1}{2x15.51}$$

$$= \frac{6,000}{31.03}$$

$$= 193 \text{ psi}$$

$$SF = \frac{36000 \times 0.6}{193}$$

$$= 111$$

3.4.2 Stress in the Shell Under the Lifting Lug

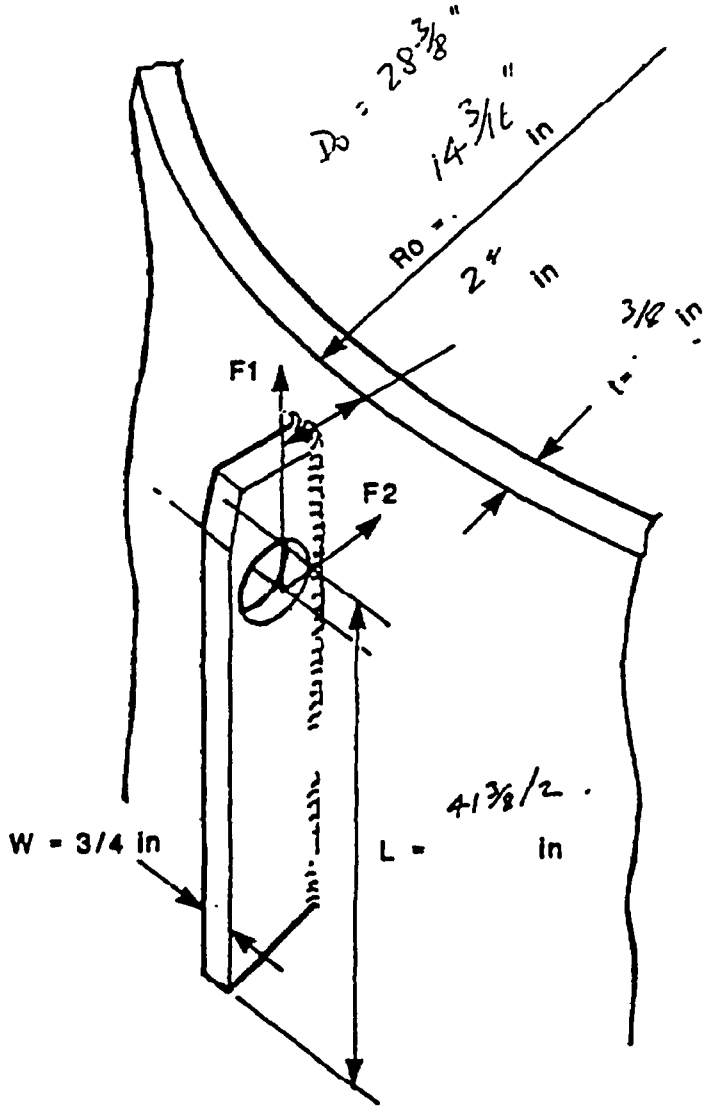

FIGURE A6.1.7 STRESS IN SHELL UNDER LIFTING LUG

Pressure vessels such as storage tanks and distillation towers have ladders, pipes and platforms supported by the vessel walls. These items represent concentrated forces acting on the thin vessel wall. Roark (Ref. (21)) performed experiments on thin-wall cylinders where loads were applied through clips or attachments. The area of load application was varied to give typical ranges as in common practice. This reference will serve as basis for estimating the stresses in the shell under the lift lug (designated local stresses) for the F-168 container.

Roarks method is used to estimate the stresses in the shell under the base (foot) of the lift lug fin during normal lifting mode.

"Mean" Outside Radius of the Vessel RO = 14.1875"

L = effective length of clip (lug) = 41.375/2 = 20.6875"

Parameter $a = \frac{L}{2RO} = \frac{20.6875}{2 \times 14.1875} = 0.729$

$b = \frac{W}{2RO} = \frac{0.75}{2 \times 14.1875} = 0.0264$

KL = 0.35 KH = 0.46

The application of a moment on the thin wall can be analyzed using equation,

$$\sigma_H = K_H \frac{P}{2t^2}$$

$$\sigma_L = K_L \frac{P}{2t^2}$$

Moment M = F1 x Moment Arm
= 6,000 x 2
= 12,000 in lbs

Vertical load F1 develops a 12,000 in-lbs moment M which is applied to a thin-walled vessel through a lug width 0.75 in and effective length 20.6875". The vessel is cylindrical, and outside radius RO = 14.1875" and the wall thickness is t1 = 0.375 in.

The stresses are required to determine if the wall is overstressed.

The 12,000 in-lb moment is reacted at the wall in a beam stress pattern. The resulting force couple is found from the triangular stress pattern.

$$P \times \frac{41.375}{2} \times \frac{2}{3} \times 2 = M$$

$$P \times 21.58 = 12{,}000$$

$$P = 556 \text{ lbs}$$

The stresses in the shell, under the lift lug base are,

$$\sigma_H = K_H \frac{P}{2t^2}$$

$$= 0.46 \times \frac{556}{2\times(0.375)^2}$$

$$= 0.46 \times 1977 = 909 \text{ psi}$$

$$\sigma_L = K_L \frac{P}{2t^2}$$

$$= 0.35 \frac{556}{2\times0.375^2}$$

$$= 692 \text{ psi}$$

The material for shell is HR ASTM A-36.

The safety factor (for the shell material)

$$= \frac{\text{Allowable Stress}}{\text{Applied Stress}}$$

$$= \frac{36000}{909}$$

$$= 39.6$$

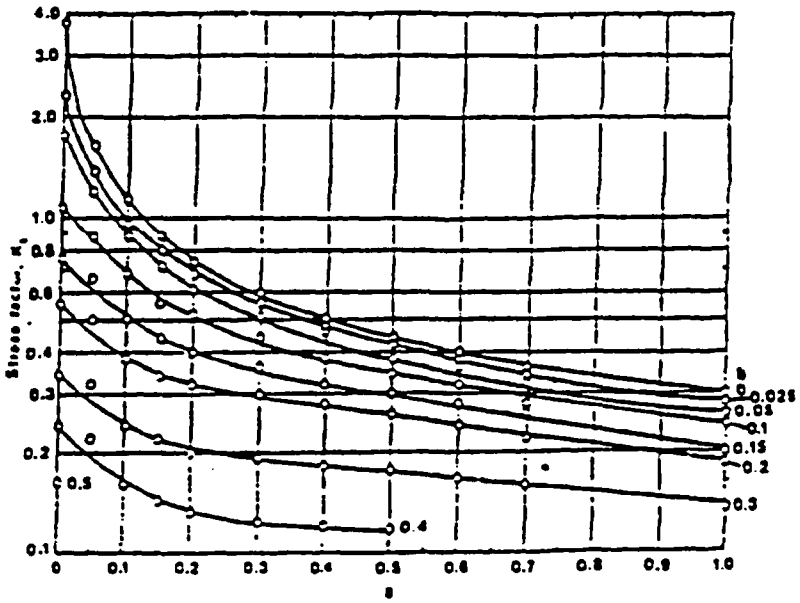

Fig 13.47 K_t for Eq 13.206 (Data from Reark [illegible])

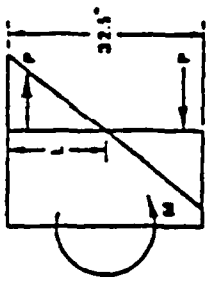

Fig. 13.48 Moment resolved into clip forces.

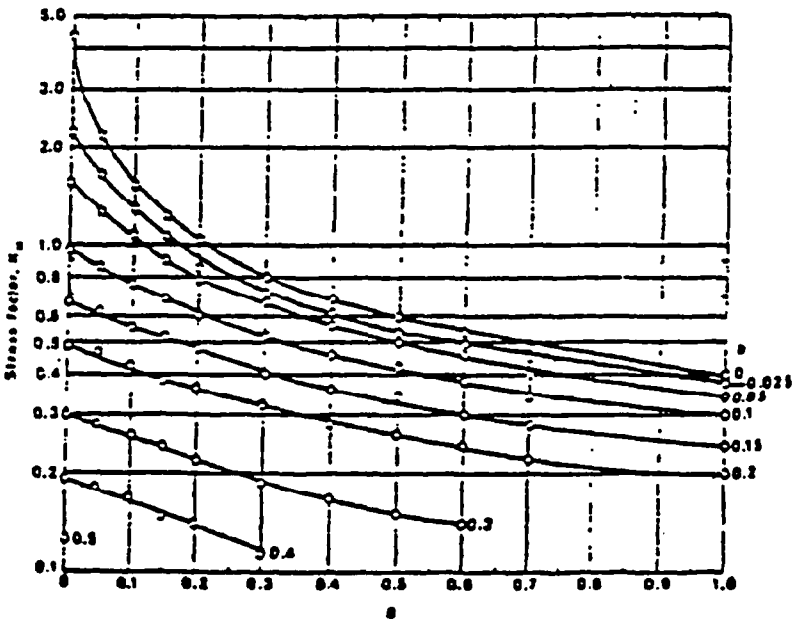

Fig 13.48 K_M for Eq. 13.205. (Data from Reark [illegible])

FIGURE A6.1.8

DATA PAGE APPENDED FROM ENGINEERING DESIGN REF. (40)

3.5 Stresses in the Weldment (lug/container)

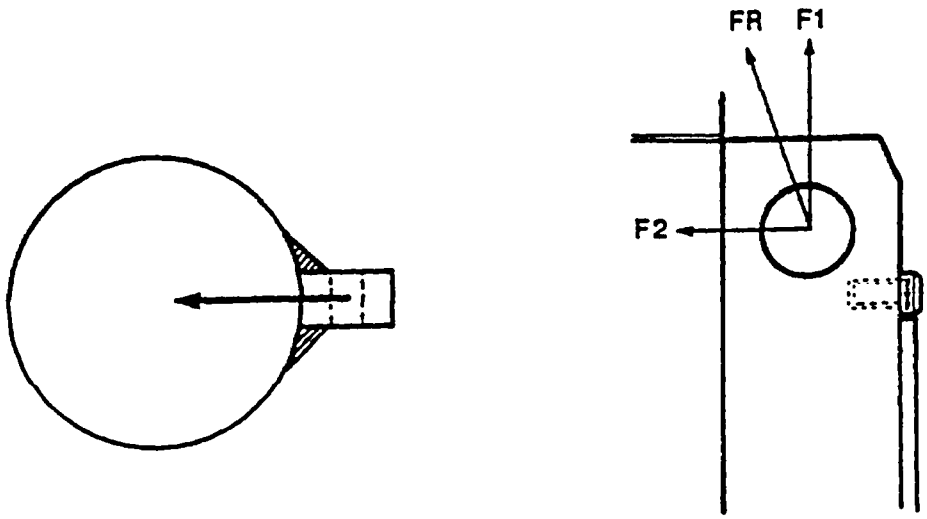

FIGURE A6.1.9

WELDMENT - LUG/CONTAINER DETAILS

3.5.1 Stress in Weldment, Ignoring Bending Moment consideration

Shear stress due to force F_1

$$\tau = \frac{F1}{\text{Effective Weld Shear Area}}$$

$$\tau = \frac{6{,}000}{41.375 \times 2 \times 0.25 \times 0.707}$$

$$\tau = 410 \text{ psi}$$

Compressive stress due to force F_2

$$\sigma = \frac{F_2}{\text{Effective Weld Area}}$$

$$= \frac{3464}{42.375 \times 2 \times 0.25 \times 0.707}$$

$$\sigma_c = 237 \text{ psi}$$

Principal Stresses are:

$$\sigma_1 \text{ or } \sigma_2 = \frac{\sigma_c}{2} \pm \sqrt{\frac{\sigma_c}{2}^2 + \tau^2}$$

$$= \frac{-237}{2} \pm \sqrt{\frac{-237}{2}^2 + (410)^2}$$

$$= -118.5 \pm 427$$

$$= +308.5 \text{ or } -545.5 \text{ psi}$$

$$\sigma_1 = 308.5 \text{ psi}$$

$$\sigma_2 = 545.5 \text{ psi}$$

SF = 0.3 x UTS/Applied Stress

$$SF = \frac{0.3 \times 70{,}000}{545.5} = 38.5$$

3.5.2 <u>Stresses in Weldment, Inclusive of Bending Moment Consideration</u>

The simplified analysis of the weld, under eccentric load, is given alternative treatment. The CISC Handbook of Steel Construction [Ref. (22)] provides a method for determining the permissible eccentric load on a "weld group". The case of lift lug/container welds is given below:

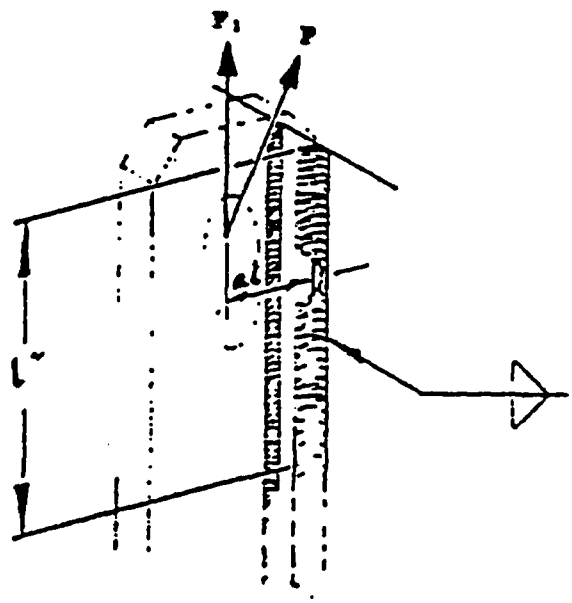

FIGURE A6.1.10 WELD GEOMETRY OF LUG/JACKET

$l = 41.375''$
$al = 2''$
$a = \frac{2}{41.375} = 0.0483$

From Table 3-11 [Ref. (17)] at a = 0.0483 and K = 0 C ≥ 1.189.

Permissible eccentric load:

$P = CDl$ D = no. of 1/16" size welds
$= 1.189 \times 4 \times 41.375$ = 4 = (1/4" weld size / 1/16")
$= 196$ Kips

This is the allowable eccentric load on the pair of welds, while being lifted normally, to give stress of 21000 psi for E70xx electrodes.

The stress on the welds, with F1 = 6,000 lbs upward load, is only

$$\sigma = \frac{6,000}{196000} \times 21000 = 643 \text{ psi}$$

$$SF = \frac{\text{Allowable Stress}}{\text{Applied Stress}} = \frac{0.3 \times 7000}{643} \text{ UTS (Weld ?)}$$

$$= \frac{21000}{643}$$

$$= 32.6$$

<u>Note</u>: The difference in calculated stresses in welds based on

1) Simplified method: Max. Stress = 545.5 psi

2) CISC method, using eccentric load consideration:
Max. Stress = 643. psi

FIGURE A6.1.11

DATA PAGE FROM CISC HANDBOOK

Coefficients C*
Table 3-11

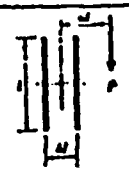

P = Permissible or resultant load in kips.
l = Length of each weld in inches.
D = Number of sixteenths of an inch in fillet weld size.
C = Coefficients tabulated below.

$P = CDl$

Required Minimum $C = \frac{P}{Dl}$

" " $D = \frac{P}{Cl}$

" " $l = \frac{P}{CD}$

Special Case
(Load not in plane of weld group)

Use Coefficients given in column headed $\lambda = 0$

θ	0	0.1	0.2	0.3	0.4	0.5	0.6	0.7	0.8	0.9	1.0	1.1	1.2	1.3	1.4	1.5
0.2	[illegible]	[illegible]	[illegible]	[illegible]	[illegible]	[illegible]	[illegible]	[illegible]	[illegible]	[illegible]	[illegible]	[illegible]	[illegible]	[illegible]	[illegible]	[illegible]
0.3	[illegible]	[illegible]	[illegible]	[illegible]	[illegible]	[illegible]	[illegible]	[illegible]	[illegible]	[illegible]	[illegible]	[illegible]	[illegible]	[illegible]	[illegible]	[illegible]
0.4	[illegible]	[illegible]	[illegible]	[illegible]	[illegible]	[illegible]	[illegible]	[illegible]	[illegible]	[illegible]	[illegible]	[illegible]	[illegible]	[illegible]	[illegible]	[illegible]
0.5	[illegible]	[illegible]	[illegible]	[illegible]	[illegible]	[illegible]	[illegible]	[illegible]	[illegible]	[illegible]	[illegible]	[illegible]	[illegible]	[illegible]	[illegible]	[illegible]
0.6	[illegible]	[illegible]	[illegible]	[illegible]	[illegible]	[illegible]	[illegible]	[illegible]	[illegible]	[illegible]	[illegible]	[illegible]	[illegible]	[illegible]	[illegible]	[illegible]
0.7	[illegible]	[illegible]	[illegible]	[illegible]	[illegible]	[illegible]	[illegible]	[illegible]	[illegible]	[illegible]	[illegible]	[illegible]	[illegible]	[illegible]	[illegible]	[illegible]
0.8	[illegible]	[illegible]	[illegible]	[illegible]	[illegible]	[illegible]	[illegible]	[illegible]	[illegible]	[illegible]	[illegible]	[illegible]	[illegible]	[illegible]	[illegible]	[illegible]
0.9	[illegible]	[illegible]	[illegible]	[illegible]	[illegible]	[illegible]	[illegible]	[illegible]	[illegible]	[illegible]	[illegible]	[illegible]	[illegible]	[illegible]	[illegible]	[illegible]
1.0	[illegible]	[illegible]	[illegible]	[illegible]	[illegible]	[illegible]	[illegible]	[illegible]	[illegible]	[illegible]	[illegible]	[illegible]	[illegible]	[illegible]	[illegible]	[illegible]
1.1	[illegible]	[illegible]	[illegible]	[illegible]	[illegible]	[illegible]	[illegible]	[illegible]	[illegible]	[illegible]	[illegible]	[illegible]	[illegible]	[illegible]	[illegible]	[illegible]
1.2	[illegible]	[illegible]	[illegible]	[illegible]	[illegible]	[illegible]	[illegible]	[illegible]	[illegible]	[illegible]	[illegible]	[illegible]	[illegible]	[illegible]	[illegible]	[illegible]
1.3	[illegible]	[illegible]	[illegible]	[illegible]	[illegible]	[illegible]	[illegible]	[illegible]	[illegible]	[illegible]	[illegible]	[illegible]	[illegible]	[illegible]	[illegible]	[illegible]
1.4	[illegible]	[illegible]	[illegible]	[illegible]	[illegible]	[illegible]	[illegible]	[illegible]	[illegible]	[illegible]	[illegible]	[illegible]	[illegible]	[illegible]	[illegible]	[illegible]
1.5	[illegible]	[illegible]	[illegible]	[illegible]	[illegible]	[illegible]	[illegible]	[illegible]	[illegible]	[illegible]	[illegible]	[illegible]	[illegible]	[illegible]	[illegible]	[illegible]

* Coefficients in table are for 1 Pound electrode, weak 21 0 for electrode shown above

Coefficients C*
Table 3-12

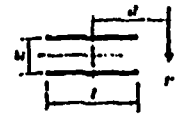

P = Permissible or resultant load in kips.
l = Length of each weld in inches.
D = Number of sixteenths of an inch in fillet weld size.
C = Coefficients tabulated below.

$P = CDl$

Required Minimum $C = \frac{P}{Dl}$

" " $D = \frac{P}{Cl}$

" " $l = \frac{P}{CD}$

θ	0	0.1	0.2	0.3	0.4	0.5	0.6	0.7	0.8	0.9	1.0	1.1	1.2	1.3	1.4	1.5
0.2	[illegible]	[illegible]	[illegible]	[illegible]	[illegible]	[illegible]	[illegible]	[illegible]	[illegible]	[illegible]	[illegible]	[illegible]	[illegible]	[illegible]	[illegible]	[illegible]
0.3	[illegible]	[illegible]	[illegible]	[illegible]	[illegible]	[illegible]	[illegible]	[illegible]	[illegible]	[illegible]	[illegible]	[illegible]	[illegible]	[illegible]	[illegible]	[illegible]
0.4	[illegible]	[illegible]	[illegible]	[illegible]	[illegible]	[illegible]	[illegible]	[illegible]	[illegible]	[illegible]	[illegible]	[illegible]	[illegible]	[illegible]	[illegible]	[illegible]
0.5	[illegible]	[illegible]	[illegible]	[illegible]	[illegible]	[illegible]	[illegible]	[illegible]	[illegible]	[illegible]	[illegible]	[illegible]	[illegible]	[illegible]	[illegible]	[illegible]
0.6	[illegible]	[illegible]	[illegible]	[illegible]	[illegible]	[illegible]	[illegible]	[illegible]	[illegible]	[illegible]	[illegible]	[illegible]	[illegible]	[illegible]	[illegible]	[illegible]
0.7	[illegible]	[illegible]	[illegible]	[illegible]	[illegible]	[illegible]	[illegible]	[illegible]	[illegible]	[illegible]	[illegible]	[illegible]	[illegible]	[illegible]	[illegible]	[illegible]
0.8	[illegible]	[illegible]	[illegible]	[illegible]	[illegible]	[illegible]	[illegible]	[illegible]	[illegible]	[illegible]	[illegible]	[illegible]	[illegible]	[illegible]	[illegible]	[illegible]
0.9	[illegible]	[illegible]	[illegible]	[illegible]	[illegible]	[illegible]	[illegible]	[illegible]	[illegible]	[illegible]	[illegible]	[illegible]	[illegible]	[illegible]	[illegible]	[illegible]
1.0	[illegible]	[illegible]	[illegible]	[illegible]	[illegible]	[illegible]	[illegible]	[illegible]	[illegible]	[illegible]	[illegible]	[illegible]	[illegible]	[illegible]	[illegible]	[illegible]
1.1	[illegible]	[illegible]	[illegible]	[illegible]	[illegible]	[illegible]	[illegible]	[illegible]	[illegible]	[illegible]	[illegible]	[illegible]	[illegible]	[illegible]	[illegible]	[illegible]
1.2	[illegible]	[illegible]	[illegible]	[illegible]	[illegible]	[illegible]	[illegible]	[illegible]	[illegible]	[illegible]	[illegible]	[illegible]	[illegible]	[illegible]	[illegible]	[illegible]
1.3	[illegible]	[illegible]	[illegible]	[illegible]	[illegible]	[illegible]	[illegible]	[illegible]	[illegible]	[illegible]	[illegible]	[illegible]	[illegible]	[illegible]	[illegible]	[illegible]
1.4	[illegible]	[illegible]	[illegible]	[illegible]	[illegible]	[illegible]	[illegible]	[illegible]	[illegible]	[illegible]	[illegible]	[illegible]	[illegible]	[illegible]	[illegible]	[illegible]
1.5	[illegible]	[illegible]	[illegible]	[illegible]	[illegible]	[illegible]	[illegible]	[illegible]	[illegible]	[illegible]	[illegible]	[illegible]	[illegible]	[illegible]	[illegible]	[illegible]

* Coefficients in table are for 1 Pound electrode, weak 21 0 for electrode shown above

A6.1.11 - Data Page
Figure
from CISC Handbook (5)

'ompari-
rate the
ection.

25 bolts in the
the shear plane
to be the deter-
adequate thick-
on on the bolts

$\frac{6}{\times 12^2}$

of the top bolts

= O.K.

ension can be ex-
ases, the unloaded
ned to be in con-
essed against, the
eutral axis of the
ie at the centre of
consisting of the
de of the neutral
ring between the
shown in Figure 3.
will be between
of the length D
nsile stresses in the
ined from elastic
moments about the

ECCENTRIC LOADS ON WELD GROUPS

Any portion of an eccentrically loaded weld group, like any individual fastener in an eccentrically loaded group of fasteners, is subjected to a force comprised of a vertical component (due to the vertical load) and an inclined component (due to the moment caused by the eccentric applications of the vertical load). In their "Welded Structural Design" course, the Canadian Welding Bureau provides detailed methods of analysis for several configurations of weld groups useful in structural steel construction. The coefficients listed in Tables 3-11 to 3-18 inclusive have been computed in co-operation with the Canadian Welding Bureau, using the theories outlined in the "Welded Structural Design" course.

All coefficients listed in Tables 3-11 to 3-18 inclusive are based on the use of E70XX electrodes, with an allowable shear stress of 21.0 ksi.

Example

Given:

A column bracket supporting a load of 40 kips. The width of the bracket is 12 inches. Welds are made of E70XX electrodes. For the weld configuration shown, find the required weld size.

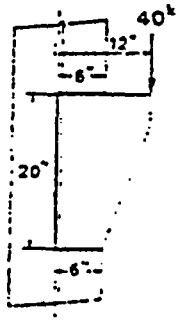

Solution:

Referring to Table 3-13, $D = \frac{P}{Cl}$

= number of sixteenths of an inch in fillet weld size.

$k = 6/20 = 0.\dot{3}$ $x = .056$ for $k = 0.3$

Referring to the figure in Table 3-13, $al \div xl = 12$

With $l = 20$, $20a \div (.056 \times 20) = 12$, $a = 0.544$

With $a = 0.544$ for $k = 0.3$, $C = .587$

Therefore, $D = \frac{40}{.587 \times 20} = 3.4$ — use one-quarter

Use $\frac{1}{4}$-inch fillet welds, made with E70XX electrodes.

Figure . A6-1-12

Data Page Append ed from CISC Handbook

3.6 Summary of Stresses, Under Normal Load Condition (2 lift lugs)

Table 6.1.1 summarizes the stresses in the lift lug, the weldment (lift lug to container shell) and the container cylindrical shell, when the F-168 container is lifted using 2 lift lugs and with normal weight (W = 12,000 lbs) acting on 2 lift lugs.

The weakest subcomponent is the eye of the lift lug under pure tension consideration; the safety factor in this case is 9. The safety factor is defined as allowable stress based on UTS or YS divided by applied stress, as computed.

In view of the fact that there is considerable safety margin, the normal lifting arrangement for F-168 container is safe and sound.

TABLE A6.1.1

STRESSES AND SAFETY FACTORS IN THE LIFT LUG ASSEMBLY UNDER NORMAL LIFTING OF F-168 CONTAINER

Mode of Lifting	2 lift lug Normal Load.(W)	
Components	Stresses (psi)	Safety Factor
Lifting Lug		
- Pure Tension	4000.	9.
- Shackle Pin Tears The Eye	1778	12.1
- Eye - Bearing Failure	6158.	5.8
Steel Jacket		
- Cylindrical Shell	193.	111.
- Cylindrical Shell (local) Under the Lift Lug	909.	39.6
Stresses in Weldment		
- Stresses, Ignore BM	545.5	38.5
- Stresses with BM	643.	32.6

4. CASE 2 : F-168 CONTAINER SNATCH LIFTING ARRANGEMENT (2 LIFT LUGS)

4.1 Estimate of Forces on the Lift Lug

In snatch mode, the F-168 package under snatch load of 3 x W = 3 x 12000 = 36,000 is lifted by use of lifting slings attached to 2 lifting lugs (See Figure A6.1.2).

Snatch Load = 3W = 3 x 12000 = 36,000 lbs.

Estimate Forces: Resolve Vertically (See Figure A6.1.2).

$$2F1 = 3W$$
$$F1 = 1.5W$$
$$F1 = 1.5 \times 12{,}000$$
$$F1 = 18{,}000 \text{ lbs}$$

Also
$$F1 = FR \cos 30^\circ$$
$$FR = F1/\cos 30^\circ$$
$$FR = 18{,}000 / 0.866$$
$$FR = 20{,}785 \text{ lbs.}$$

$$F2 = FR \sin 30^\circ$$
$$= 20{,}785 \times 0.5$$
$$= 10{,}393 \text{ lbs.}$$

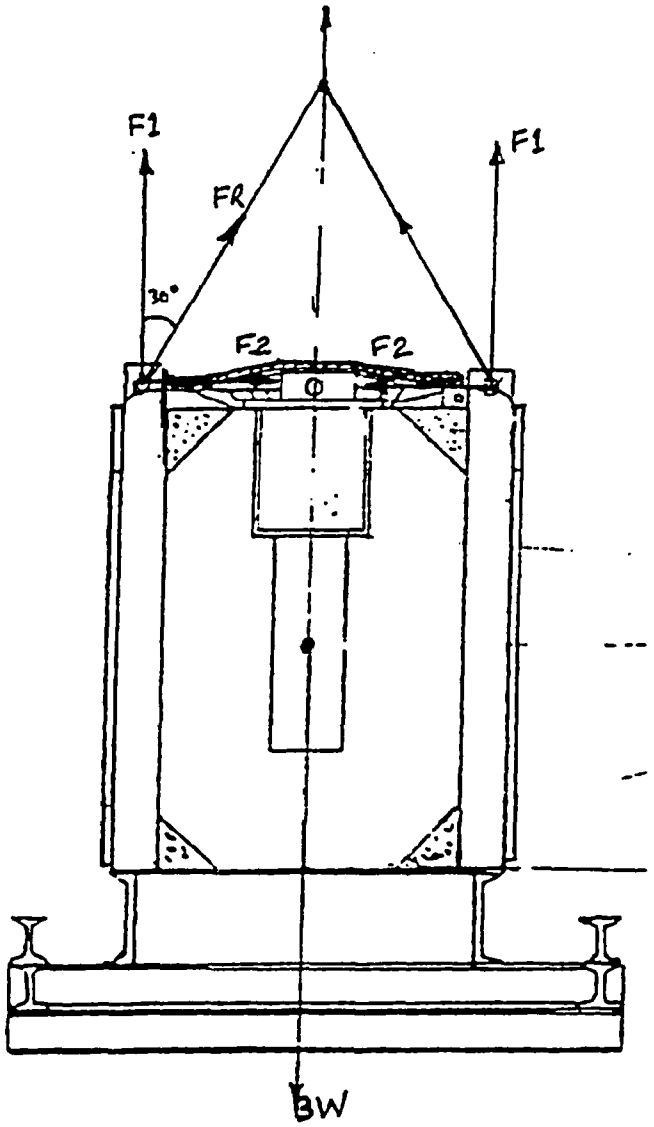

FIGURE A6.1.2

"SNATCH" LIFTING ARRANGEMENT (2 LIFT LUGS)

4.2 Failure Modes

The failure modes are similar to those identified in Article 3.2. The 3 subcomponents, namely 1) Lift Lug Fin, 2) Container Cylindrical Shell, 3) Weldment Container/lug) will be analyzed herein.

4.3 Stresses in the Lift Lug

As the snatch load is 3 x normal load, the stresses under snatch load conditions will be 3 x the computed stress under normal load conditions.

Therefore, under snatch load conditions:

1) Under Pure tension due to F1, the tensile stress, σ

σ = 3 x stress under normal load conditions (Article 3.3.1)
= 3 x 4000 psi
= 12,000 psi

$$\text{The safety factor} = \frac{\text{Allowable Stress}}{\text{Applied Stress}}$$

$$= \frac{\text{Yield Stress of Lug Material}}{\text{Applied Stress}}$$

$$= \frac{36000}{12000}$$

$$= 3.$$

2) Shackle pin tears out of the eye:

τ, Shear tearout stress = 3 x shear tear out stress under normal load condition (Article 3.3.2)

= 3 x 1,778 psi
= 5,334 psi

$$\text{Safety Factor} = \frac{\text{Allowable Stress}}{\text{Applied Stress}}$$

$$= \frac{0.6 \times \text{Yield Stress}}{\text{Applied Stress}}$$

$$= \frac{0.6 \times 36{,}000}{5{,}334}$$

$$= 4.$$

3) Bearing Failure of the eye.

σ_{bm} Bearing Stress = 3 x Bearing Stress under normal load condition (Article 3.3.3)

= 3 x 6158

= 18,444 psi

Safety Factor = $\frac{36,000 \text{ psi}}{18,444 \text{ psi}}$

= 1.9

4.4 Stresses in the Cylindrical Shell (steel jacket)

4.4.1 Stresses in the cylindrical shell

τ, shear stress = 3 x shear stress under normal load condition (Article 3.4.1).

= 3 x 193 psi

= 580 psi

Safety factor = $\frac{36000 \times 0.6}{580}$

= 37.2

4.4.2 Stresses in the cylindrical shell, under the lifting lug

Hoop Stress σ_H = 3 x Hoop Stress under normal load condition (Article 3.4.2)

= 3 x 909

= 2727 psi

Safety Factor = $\frac{36000}{2727}$

= 13.2

4.5 Stresses in the cylindrical shell (Steel Jacket)

4.5.1 Stresses in the weldment, ignoring Bending Moment Consideration

σ_2, the principal stress = 3 x the principal stress under normal load conditions (Article 3.5.1)

= 3 x 545.5 psi

= 1636 psi

Safety Factor = $\frac{0.3 \times UTS}{\text{Applied Stress}}$

= $\frac{0.3 \times 70,000}{1636}$

= 12.8

4.5.2 Stresses in the Weldment Inclusive of Bending Moment Consideration

σ_t stress = 3 x σ_t stress under normal load conditions
= 3 x 643 (Article 3.5.2)
= 1930 psi

Safety Factor = $\frac{0.3 \times 70{,}000}{1930}$

= 10.8

4.6 Summary of Stresses, Under Snatch Load Condition (2 lift lugs)

When the F-168 container, under snatch load conditions (3W = 3 x 12,000 = 36,000 lbs), is lifted using 2 lift lugs, the stresses in the lift lug, the weldment (the lift lug/container shell) and the container cylindrical shell is as per Table A6.1.2. The same table also lists the Safety Factors.

The weakest subcomponent is the eye of the lift lug under bearing failure consideration, the safety factor in this case is 1.9. This is adequate.

In view of the fact that there is considerable safety margin, the snatch lifting (2 lift lug) arrangement for F-168 container is safe and sound.

TABLE A6.1.2

Stresses and Safety Factors in the lift lug assembly under SNATCH lifting (2 lift lugs) of F-168 container.

Mode of Lifting	Snatch Load 3W (2 lift lugs)	
Components	Stress	Safety Factor
Lifting Lug		
- Pure Tension	12,000	3.
- Shackle Pin Tears Out of The Eye	5,344	4.
- Eye - Bearing Failure	18,444	1.9
Steel Jacket		
- Cylindrical Shell	580	37.2
- Cylindrical Shell (load under the lift lug)	2,727	13.2
Stresses in Weldment		
- Stresses, Ignore BM	1,636	12.8
- Stresses with BM	1,930	10.8

5. CASE 3 : F-168 SNATCH LIFTING ARRANGEMENT (1 LIFT LUG)

5.1 Estimate of Forces on the Lift Lug (See Figure A6.1.3)

In this snatch lifting arrangement, 3 x weight of F-168 container is lifted by use of ONE lift lug only. This is an ABNORMAL situation; it is not required by regulations (Ref (1)) to be examined; however assessment of the lift lug is made under this lifting arrangement scheme for reference only.

Estimate Forces: Resolve vertically (See Figure A6.1.3)

$$FR = 3W$$
$$= 3 \times 12{,}000$$
$$= 36{,}000 \text{ lbs}$$

$$F1 = FR \times \cos\theta$$
$$= 36{,}000 \times \cos 45^\circ$$
$$= 25{,}542 \text{ lbs}$$

$$F2 = Fr \times \sin\theta$$
$$= 36{,}000 \times \sin 45^\circ$$
$$= 25{,}542 \text{ lbs}$$

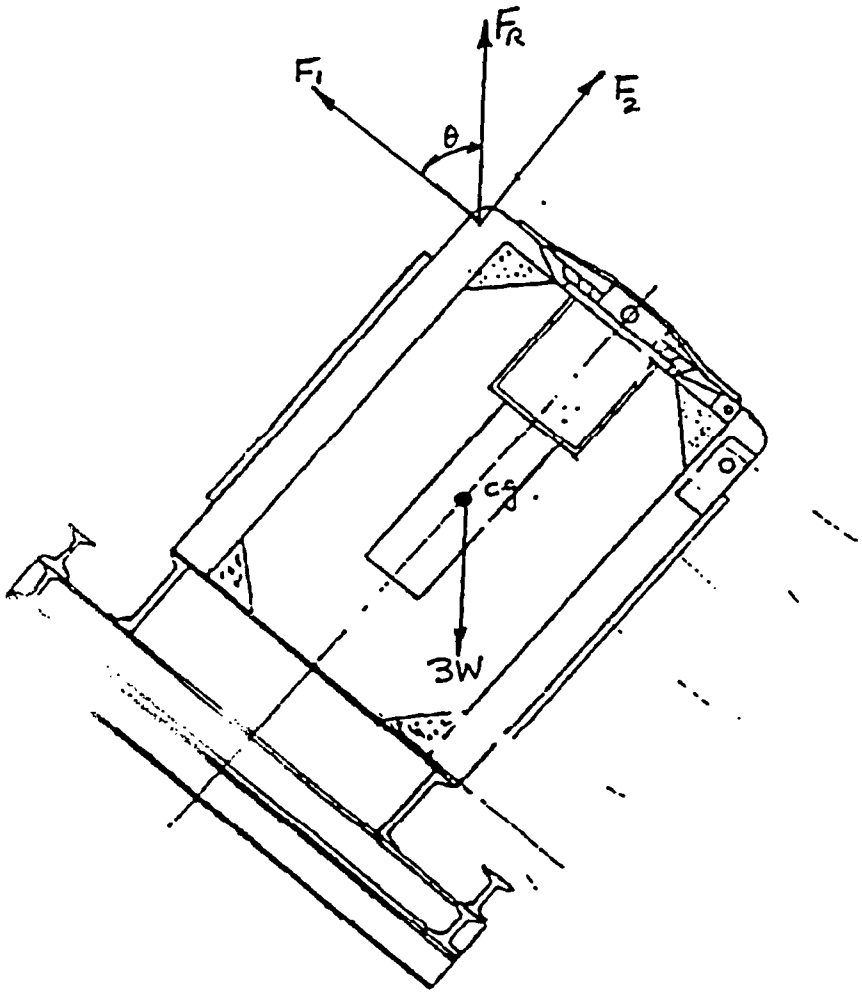

FIGURE A6.1.3

F-168 SNATCH LIFTING ARRANGEMENT (1 LIFT LUG)

5.2 Failure Modes

The failure modes are similar to those identified in Article 3.2. The 3 subcomponents, namely:

1) Lift Lug Fin
2) container cylindrical shell, and
3) weldment (container/lug)

will be analyzed herein.

5.3 Stresses in the Lift Lug

1) The Pure tension in the lug is

$$= \frac{F1}{A} = \frac{25,542}{0.75\ (1+1)} = 16,968 \text{ psi}$$

$$\text{The Safety Factor} = \frac{\text{Allowable Stress}}{\text{Applied Stress}}$$

$$= \frac{\text{Yield Stress of Lug Material}}{\text{Applied Stress}}$$

$$= \frac{36,000}{16,968}$$

$$= 2.1$$

2) Shackle Pin tears out of the eye of the lift lug fin. (See Figure A6.1.5)

$$\tau, \text{ Shear tearout stress} = \frac{FR}{\text{Area of Shear}}$$

$$= \frac{36,000}{(l_1+l_2)xt}$$

$$= \frac{36,000}{(2.25+1.75)x0.75}$$

$$= \frac{36,000}{3.0} \frac{\text{lbs}}{\text{in}^2}$$

$$= 12,000 \text{ psi}$$

$$\text{Safety Factor} = \frac{\text{Allowable Stress}}{\text{Applied Stress}}$$

$$= \frac{0.6 \times 36{,}000}{12{,}000}$$

$$= 1.8$$

3) Bearing Failure of the eye of the lift lug

$$\sigma_b = \frac{Fr}{td}$$

where Fr = 36,000 lbs
t = thickness of lift lug fin = 0.75"
d = nominal dia. of shackle pin (1.5" dia)

$$\sigma_b = \frac{36{,}000}{0.75 \times 1.5}$$

$$= 32{,}000 \text{ psi}$$

$$\text{Safety Factor} = \frac{\text{Allowable Stress}}{\text{Applied Stress}}$$

$$= \frac{36{,}000}{32{,}000}$$

$$= 1.1$$

5.4 Stresses in the Cylindrical Shell (steel jacket)

5.4.1 Shear Stress $= \dfrac{F_1}{\text{Shear Area}}$

$$= \frac{25{,}542}{2 \times 0.375 \times 41.375 \times 0.707}$$

$$= 1{,}160 \text{ psi}$$

$$\text{Safety Factor} = \frac{\text{Allowable Stress}}{\text{Applied Stress}}$$

$$= \frac{36{,}000 \times 0.6}{1{,}160}$$

$$= 18.6$$

5.4.2 Stresses in the shell under the lifting lug specifically

Moment M = F1 x Moment Arm
= 25,542 x 2
= 50,904 in. lbs

The M = 50,904 in. lbs the moment is reacted at the wall in a beam stress pattern. The resulting force couple is found from the triangular stress pattern.

$$P \times \frac{41.375}{2} \times \frac{2}{3} \times 2 = M$$

$$P \times 27.58 = 50{,}904$$

$$P = 1846 \text{ lbs}$$

The stresses in the shell under the lift lug base are:

$$\sigma_H = K_H \times \frac{P}{2t^2}$$

$$= 0.46 \times \frac{1846}{2x(0.375)^2}$$

$$= 3019 \text{ psi}$$

$$\sigma_L = K_L \times \frac{P}{2t^2}$$

$$= 0.35 \times \frac{1846}{2x(0.375)^2}$$

$$= 2297 \text{ psi}$$

The material for shell is HR ASTM A-36.

The safety factor for the shell material

$$= \frac{\text{Allowable Stress}}{\text{Applied Stress}}$$

$$= \frac{36{,}000}{3019}$$

$$= 11.9$$

5.5 Stresses in the Weldment (lug/container)

5.5.1 Stresses in Weldment, Ignoring Bending Moment Consideration

Shear Stress due to force F1

$$\tau = \frac{F1}{\text{Effective Weld Shear Area}}$$

$$= \frac{25,542}{41.375 \times 2 \times 0.25 \times 0.707}$$

$$= 1740 \text{ psi}$$

Tensile Stress due to force F2

$$\sigma = \frac{F2}{\text{Effective Weld Area}}$$

$$= \frac{25,542}{41.375 \times 2 \times 0.25 \times 0.707}$$

$$= 1740 \text{ psi}$$

Principal Stresses are:

$$\sigma_1 \text{ OR } \sigma_2 = \frac{\sigma_c}{2} \pm \sqrt{\frac{\sigma_c}{2}^2 + \tau^2}$$

$$\sigma_1 \text{ OR } \sigma_2 = + \frac{1740}{2} \pm \sqrt{\frac{1740}{2}^2 + (1740)^2}$$

$$\sigma_1 \text{ OR } \sigma_2 = + 870 \pm \sqrt{(870)^2 + (1740)^2}$$

$$\sigma_1 \text{ OR } \sigma_2 = + 870 \pm 1945$$

$$\sigma_1 = + 2815 \text{ psi}$$

$$\sigma_2 = - 1075 \text{ psi}$$

$$\text{Safety Factor} = \frac{\text{Allowable Stress}}{\text{Applied Stress}}$$

$$= \frac{0.3 \times \text{UTS}}{2815}$$

$$= \frac{0.3 \times 70,000}{2815}$$

$$= 7.4$$

5.5.2 Stresses in Weldment, inclusive of Bending Moment Consideration

See Article 3.5.2

$$P = CDl$$
$$= 1.189 \times 4 \times 41.375$$
$$= 196 \text{ Kips}$$

This is the allowable eccentric load on the pair of welds, while being lifted normally, to give stress of 21,000 psi for E70XX electrodes.

The stress on the welds, with F1 = 25,542 lbs upward load, is only

$$\sigma = \frac{25,542}{196,000} \times 21,000 = 2,727 \text{ psi}$$

$$\text{Safety Factor} = \frac{\text{Allowable Stress}}{\text{Applied Stress}}$$

$$= \frac{0.3 \times \text{UTS (weld metal)}}{2,727}$$

$$= \frac{0.3 \times 70,000}{2,727}$$

$$= 7.7$$

Note: The difference in calculated stresses in the welds based on:

1) Simplified method: max. stress = 2,815 psi

2) CISC method, using eccentric load consideration:
max. stress = 2,727 psi

Fairly close.

TABLE A6.1.3

Stresses and Safety Factors in the lift lug assembly under SNATCH lifting (1 lift lug) of F-168 container.

Mode of Lifting	Snatch Load 3W (1 lift lug)	
Components	Stresses(psi)	Safety Factor
Lifting Lug		
- Pure Tension	16,968	2.1
- Shackle Pin Tears Out of The Eye	12,000	1.8
- Eye - Bearing Failure	32,000	1.1
Steel Jacket		
- Cylindrical Shell	1,160	18.6
- Cylindrical Shell (load under the lift lug)	3,019	11.9
Stresses in Weldment		
- Stresses, Ignore BM	2,815	7.4
- Stresses with BM	2,727	7.7

5.6 Summary of Stresses, Under Snatch Load Condition (1 lift lug)

When the F-168 container, under snatch load conditions (3W = 3 x 12,000 = 36,000 lbs) is lifted using 1 lift lug, the stresses in the lift lug, the weldment (the lift lug/container shell) and the container cylindrical shell is as per Table 6.1.3. The same table also lists the safety factors.

The weakest subcomponent is the eye of the lift lug under eye/shackle pin bearing failure consideration, the safety factor under this circumstances, is 1.1 . This is adequate.

In view of the fact that there is considerable safety margin, the snatch lifting (under 1 lift lug condition) of the F-168 container is safe and sound.

6. CONCLUSIONS

6.1 During lifting of the F-168 package under NORMAL load conditions (2 lift lugs), the weakest subcomponent is the eye of the lift lug under eye shackle pin bearing consideration. Even under these conditions, the safety factor (defined as allowable stress/applied stress) of 5.8 exists.

6.2 During lifting of the F-168 package under SNATCH load conditions (2 lift lug), the weakest subcomponent is the eye of the lift lug under eye/shackle bearing consideration. Even under these conditions, the safety factor of 1.9 exists.

6.3 During abnormal lifting of F-168 package under SNATCH load conditions (1 lift lug), the weakest subcomponent is the eye of the lift lug under eye/shackle bearing consideration. Even under this conditions, the safety factor of 1.1 exists.

6.4 During NORMAL and SNATCH lifting mode, the stresses in the lift lug of F-168 are below the yield stress or 0.3 x Ultimate Tensile Stress or 0.6 x Ultimate Tensile Stress.

In view of this, the structural integrity of the lift lug of F-168 container is considered satisfactory.

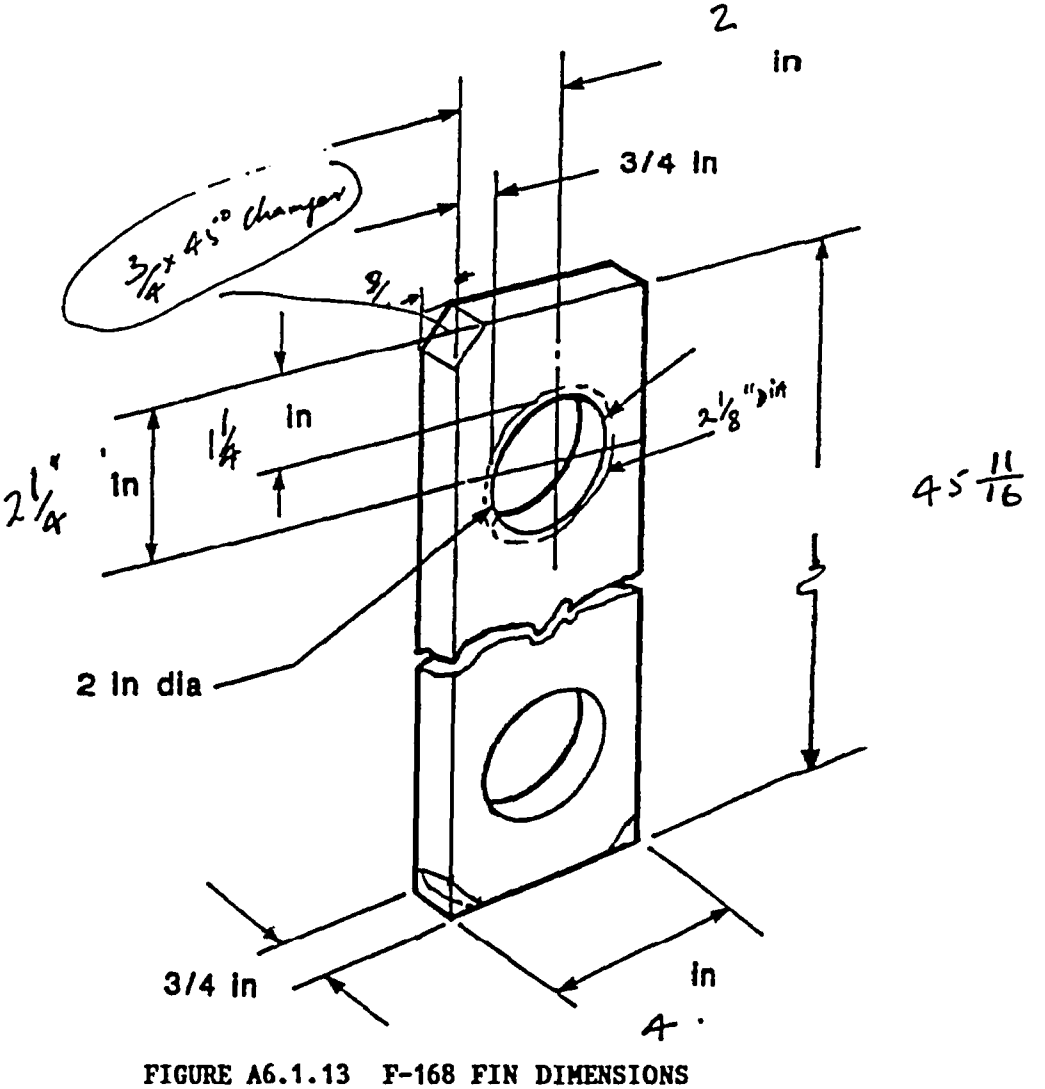

FIGURE A6.1.13 F-168 FIN DIMENSIONS

Figure A5-2-10

Shackle Data # Crosby Catalogue

A5.2-25

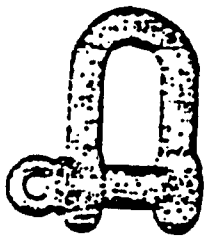

G-210 S-210
Screw pin chain shackles meet Federal Specification RR-C-271b Type IV Class 2.

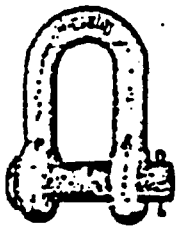

G-215 S-215
Round pin chain shackles meet Federal Specification RR-C-271b Type IV Class 5.

Load Rated

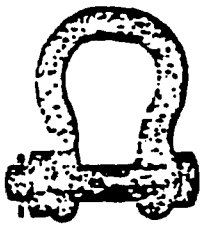

G-2130 S-2130
Bolt type anchor shackles with thin head bolt — nut with cotter pin. Meets Federal Specification RR-C-271b Type IV Class 6.

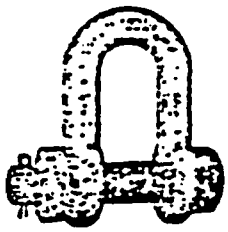

G-2150 S-2150
Bolt type chain shackles. Thin hex head bolt — nut with cotter pin.

CHAIN SHACKLES — ROUND PIN & SCREW PIN

Safe Working Load Tons	Nominal Shackle Size Inches	DIMENSIONS IN INCHES: Inside Length	Inside Width	Tolerance Plus or Minus: Length	Tolerance Plus or Minus: Width	Diameter: Pin	Diameter: Outside of Eye	Weight Pounds Each: 210	Weight Pounds Each: 215
½	¼	⅞	13/32	1/16	1/16	3/16	11/16	.11	.10
¾	5/16	1 1/32	17/32	1/16	1/16	⅜	13/16	.18	.17
1	⅜	1¼	21/32	⅛	1/16	7/16	31/32	.24	.25
1½	7/16	1 7/16	23/32	⅛	1/16	½	1 1/16	.50	.38
2	½	1⅝	13/16	⅛	1/16	⅝	1 3/16	.59	.50
3¼	⅝	2	1 1/16	⅛	1/16	¾	1 9/16	1.21	1.21
4¾	¾	2⅜	1¼	¼	1/16	⅞	1 7/8	2.25	2.00
6½	⅞	2 13/16	1 7/16	¼	1/16	1	2⅛	3.16	3.28
9½	1	3 3/16	1 11/16	¼	1/16	1⅛	2⅜	4.75	4.75
9½	1⅛	3 9/16	1 13/16	¼	1/16	1¼	2⅝	6.75	6.30
12	1¼	3 15/16	2 1/32	¼	⅛	1⅜	3	9.06	9.00
13½	1⅜	4⅜	2¼	¼	⅛	1½	3 5/16	11.53	12.00
17	1½	4 13/16	2⅜	¼	⅛	1⅝	3 3/8	15.95	16.15
25	1¾	5¾	2⅞	⅜	⅛	2	4 9/16	26.75	26.75
35	2	6¾	3¼	⅜	⅛	2¼	5	42.31	43.25
*55	2½	8	4⅛	⅜	¼	2¾	6	72.75	—

*Furnished in Screw Pin Only.

BOLT TYPE ANCHOR & CHAIN SHACKLES

Safe Working Load Tons	Nominal Shackle Size Inches	DIMENSIONS IN INCHES: Inside Length 2130	Inside Length 2150	Inside Width at Pin	Diameter: Pin	Diameter: Outside of Eye	Tolerances Plus or Minus: Length	Tolerances Plus or Minus: Width	Weight Pounds Each: 2130	Weight Pounds Each: 2150
2	½	1⅞	1⅝	13/16	⅝	1 3/16	⅛	1/16	.79	.75
3¼	⅝	2⅜	2	1 1/16	¾	1 9/16	⅛	1/16	1.25	1.25
4¾	¾	2 13/16	2⅜	1¼	⅞	1⅞	¼	1/16	2.72	2.25
6½	⅞	3 5/16	2 13/16	1 7/16	1	2⅛	¼	1/16	4.00	3.50
8½	1	3¾	3 3/16	1 11/16	1⅛	2⅜	¼	1/16	5.00	5.25
9½	1⅛	4¼	3 9/16	1 13/16	1¼	2⅝	¼	1/16	8.27	7.50
12	1¼	4 11/16	3 15/16	2 1/32	1⅜	3	¼	1/16	11.50	10.25
13½	1⅜	5 1/16	4⅜	2¼	1½	3 5/16	¼	⅛	15.25	13.75
17	1½	5⅜	4 13/16	2⅜	1⅝	3⅜	⅛	⅛	20.00	18.50
25	1¾	7	5¾	2⅞	2	4 9/16	⅜	⅛	33.91	31.00
35	2	7¾	6¾	3¼	2¼	5	⅜	⅛	51.00	46.75
55	2½	10½	8	4 1/8	2¾	6	⅜	¼	98.25	85.00
†85	3	13	8½	5	3¼	6½	¼	¼	158.00	124.25
†120	3½	14⅝	—	5¼	3¾	8	¼	¼	†265.00	—
†150	4	14½	—	5½	4¼	9	¼	¼	338.00	—

NOTE: Proof Load is 2.2 times the Safe Working Load. Minimum Ultimate Load is 6 times the Safe Working Load.

†Individually proof tested

APPENDIX 6.2

TIEDOWN

TABLE OF CONTENTS

APPENDIX 6.2

		PAGE
1.	INTRODUCTION	A6.2.4
2.	MATERIAL PROPERTIES FOR LIFT LUG, WELDMENT, CONTAINER SHELL	A6.2.4
3.	TIEDOWN W.R. TO R.D.T. F-8-11 STANDARDS	A6.2.8
	3.1 Analysis of Forces	A6.2.8
	3.1.1 Nomenclature	A6.2.8
	3.1.2 Forwards/Backwards 2G Acceleration	A6.2.8
	3.1.3 Sideways (lateral) 1G Acceleration	A6.2.10
	3.1.4 Vertical 3G Upward	A6.2.14
	3.1.5 Vertical 2G Downward	A6.2.14
	3.1.6 Summary	A6.2.15
	3.1.7 Analysis of Lift Lug Components	A6.2.16
4.	LOADS AND STRESSES IN THE LIFT LUG BASED ON USNRC CFR 10.7 (31.D) REGULATIONS	A6.2.19
	4.1 Analysis of Forces	A6.2.19
	4.1.1 Forwards/Backwards 10G Acceleration	A6.2.19
	4.1.2	A6.2.24
	4.2 Stresses in Lift Lug Components	A6.2.28
5.	CONCLUSION	A6.2.30
	5.1 Using RDT Guidelines	A6.2.30
	5.2 Using USNRC CRF Guidelines	A6.2.30
	5.3	A6.2.30
	5.4	A6.2.30

LIST OF FIGURES

Figure No.	Title	Page
A6.2.1	Tiedown Arrangement	A6.2.5
A6.2.2	Tiedown Forces	A6.2.6
A6.2.3	Tiedown Mode in X-direction	A6.2.7
A6.2.4	Forces: Tiedown mode in X-direction (forwards)	A6.2.9
A6.2.5	Tiedown Mode in Z-direction	A6.2.11
A6.2.6	Forces: Tiedown mode in Z-direction (sideways)	A6.2.12
A6.2.7	Forces in Vertical UP direction	A6.2.14
A6.2.8	Forces in Vertical DOWN direction	A6.2.14
A6.2.9	Lift Lug Fin	A6.2.16
A6.2.10	Tiedown mode in X-direction (forward)	A6.2.20
A6.2.11	Forces: Tiedown mode in X-direction (forwards)	A6.2.21
A6.2.12	Tiedown mode in Z-direction (sideways)	A6.2.23
A6.2.13	Forces: Tiedown mode in Z-direction (lateral)	A6.2.24
A6.2.14	Forces: Parallelogram	A6.2.26
A6.2.15	Tiedown Forces on the Lift Lug	A6.2.27
A6.2.16	Lift Lug Fin	A6.2.28
A6.2.17	Lift Lug Fin: horizontal force FH	A6.2.32
A6.2.18	Lift Lug Fin: vertical force FV	A6.2.33
A6.2.19	Lift Lug Fin: lateral force FL	A6.2.34
A6.2.20	Lift Lug Fin: bending moment	A6.2.35
A6.2.21	Lift Lug Fin: combined stress	A6.2.35
A6.2.22	Load capacity of fin lug welds subjected to 3-D combined tiedown load	A6.2.36

LIST OF TABLES

Table Number	Title	Page
A6.2.1	Acceleration Values of the Vehicle # Number of G's	A6.2.4
A6.2.2	Force v/s Acceleration Mode, Matrix (RDT F8-11T)	A6.2.15
A6.2.3	Force v/s Acceleration Mode Matrix (USNRC CFR)	A6.2.26

APPENDIX 6.2

1. INTRODUCTION

The attachments intended for tiedown during transportation, are 4 lift lug fins of the F-168 container proper.

The lift lug fin is welded to the cylindrical shell of the container.

The loads applied to the lift lug fin, in a tiedown mode, are calculated using the methods and conditions presented in the RDT Standard F-8-11T (reference (10)) for wire rope tiedown and CRF 10.7 (31.d) Regulations. See Table A6.2.1.

Table A6.2.1 Acceleration Values of the Vehicle
 # Number of G's

DIRECTION	RDT STANDARD F8-11T(1) (TRUCK/RAIL)	INTERNATIONAL CFR 10.7 (31.d) (TRUCK/RAILE)
Forward/Backward	2G	10G
Sidewise	1G	5G
Vertical - UP	3G	2G
Vertical - DOWN	2G	

2. MATERIAL PROPERTIES, FOR LIFT LUG, WELDMENT, CONTAINER SHELL

1) LIFT LUG FIN
   DWG
   MATERIAL ASTM A-36
   UTS = 58,000 - 80,000 psi
   YS = 36,000 psi

2) WELDMENT
   ELECTRODE E7014
   UTS = 70,000 psi

3) CONTAINER SHELL
   MATERIAL = ASTM A-36
   YS = 36,000 psi

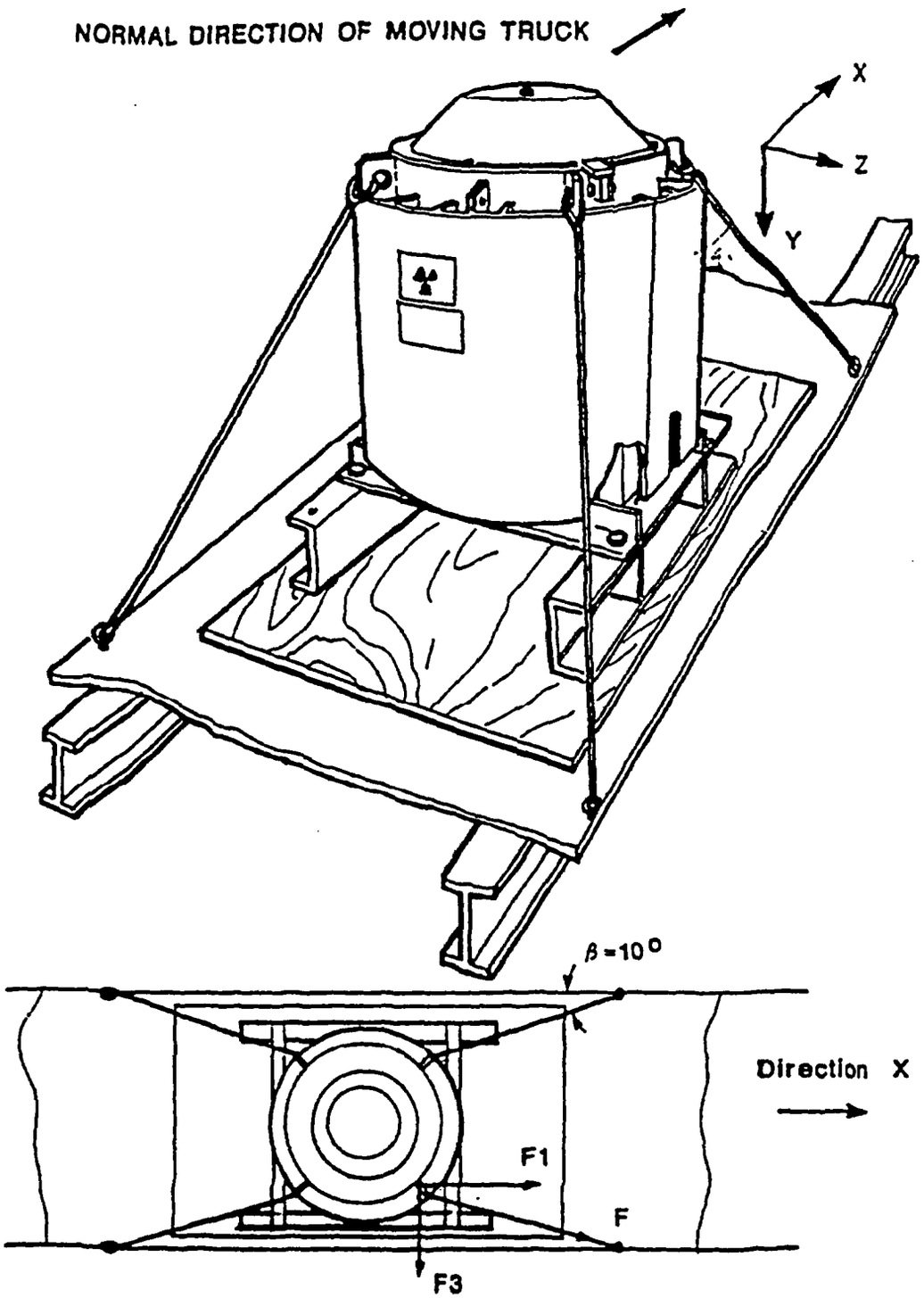

FIGURE A6.2.1
TIEDOWN ARRANGEMENT

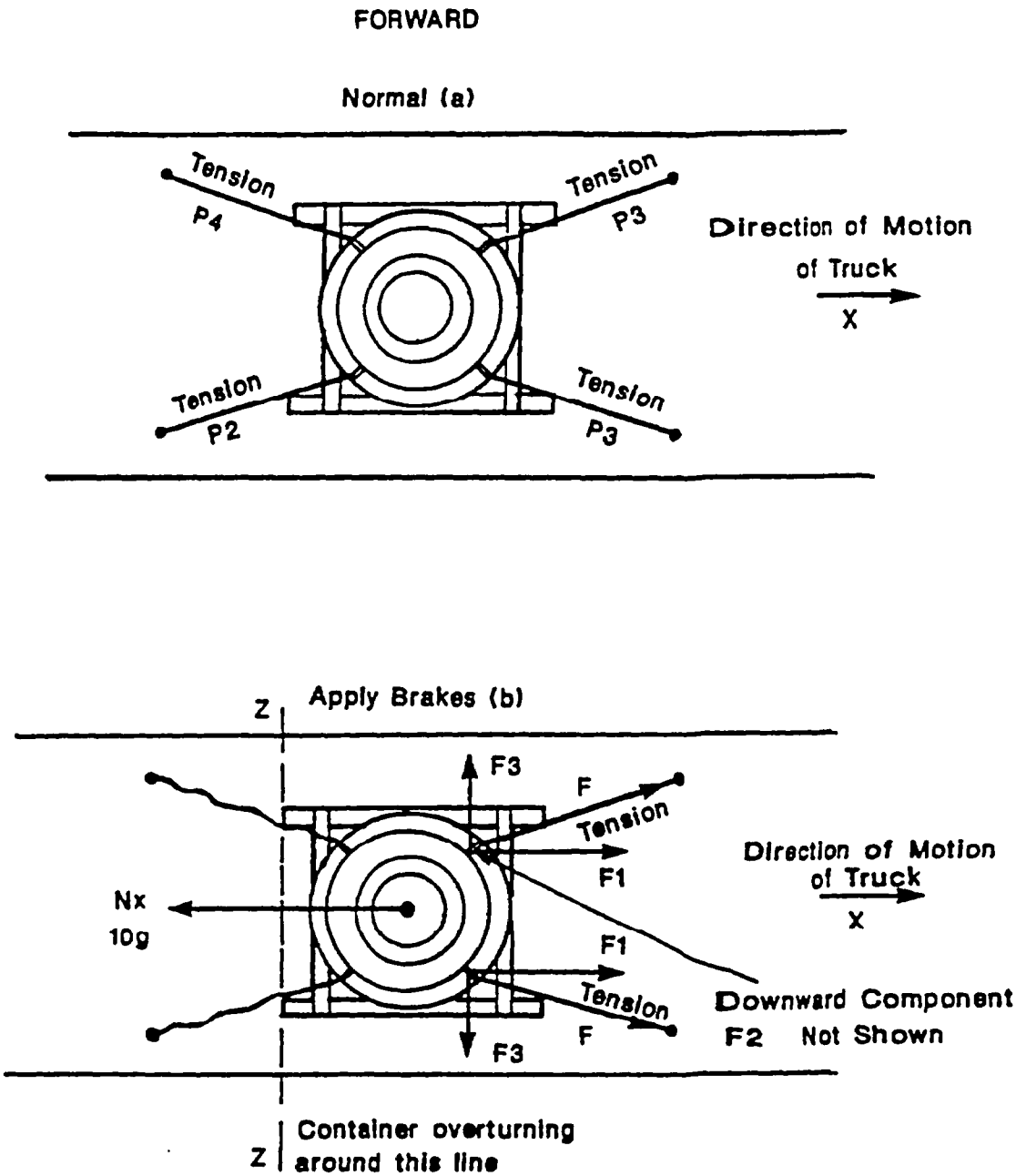

FIGURE A6.2.2

TIEDOWN FORCES

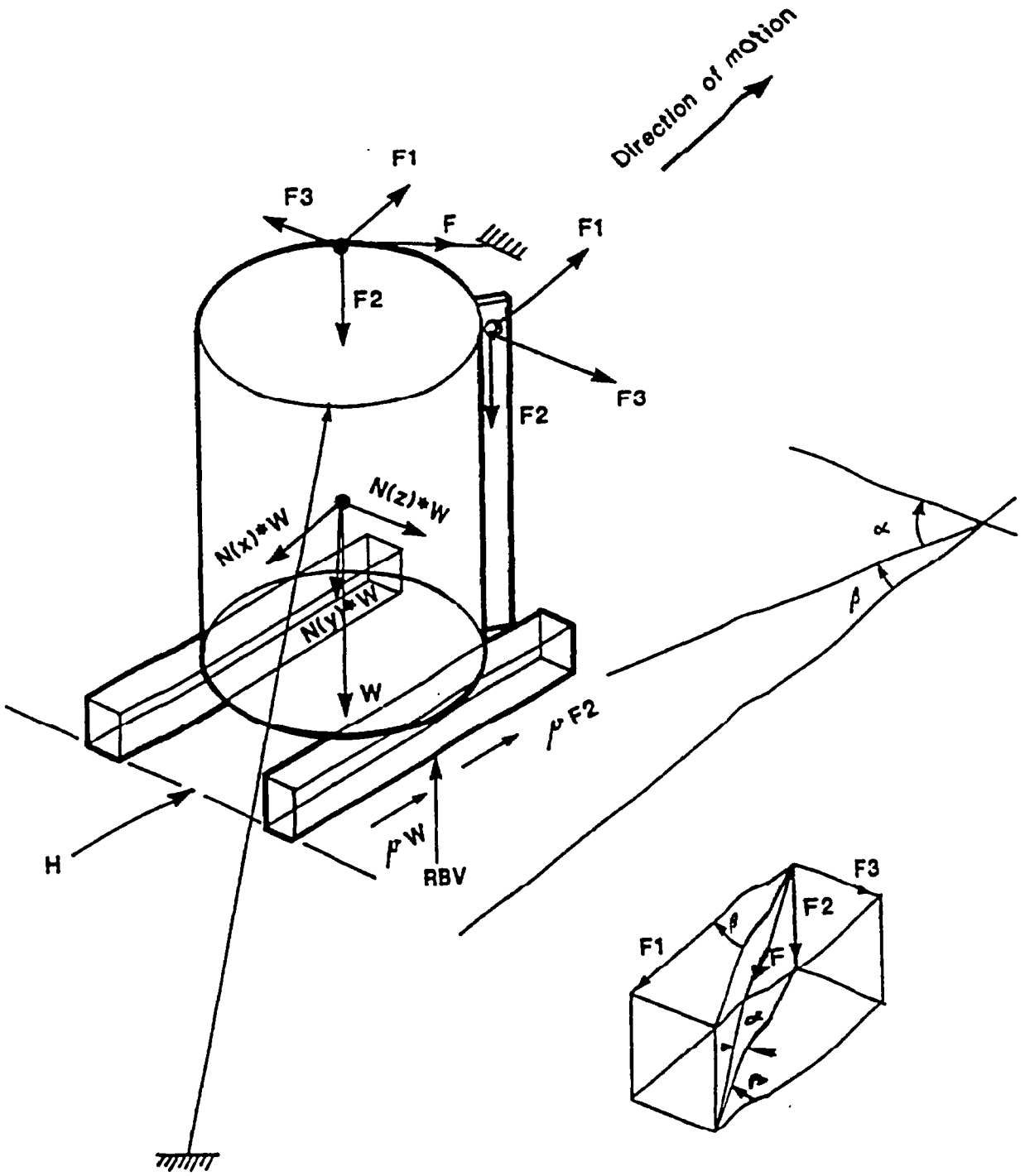
Direction of motion
F1
F3
F
F1
F2
F3
F2
N(z)*W
N(x)*W
N(y)*W
W
α
β
μF2
μW
RBV
H
F3
F2
F1
β
F
α
β

FIGURE A6.2.3

3. TIEDOWN W.R. to R.D.T F-8-11 STANDARDS

3.1 Analysis of Forces

See Figure A6.2.1 Tiedown Arrangement
See Figure A6.2.2 Tiedown Forces (general)

3.1.1 Nomenclature

F = Tiedown Force per lift lug applied by cable or chain
F1 = Tiedown force component per lift lug in X-direction
F2 = Tiedown force component per lift lug in Y-direction
F3 = Tiedown force component per lift lug in Z-direction
NG( ) = G-loads as per Table A6.2.1
H ( ) = Chocking force in X or Z direction
RBV = Reaction Force of the base of the container
W = Weight of the container
μ = Coefficient of Friction
α,β = Angles between tiedown point on the container and tiedown point on the transport vehicle (See Figure A6.2.1 & A6.2.2)

3.1.2 Forwards/Backwards - 2G Acceleration Applied

In normal mode the vehicle (trailer bed) is moving in X-direction. See Figure A6.2.3. All 4 cables (P1, P2, P3, P4) are in tension. As the brakes are applied (causing - NG(x) deceleration of the vehicle), there is tendency for the container to overturn around a line ZZ; subsequently the cables P1 & P4 are slack and P2 & P3 are in tension, resisting the deceleration load NG(x) x W.

Analysis of Forces

See Figure A6.2.4.

The component forces are related to resultant force F as follows:

$$F1 = F \cos\alpha \cos\beta = F \cos 45^\circ \cos 10^\circ = 0.7F$$
$$\& \quad F2 = F \sin\alpha = F \sin 45^\circ = 0.707F$$

The following 3 equations of static equilibrium are used to calculate forces in XY plane

1) Σ Forces in Y-direction

$$W + 2F2 - RBV = 0$$
$$RBV = W + 2F2$$

2) Σ Force in X-direction

$$NG(x)xW - 2F1 - \mu W - 2\,\mu F2 - H(x) = 0$$

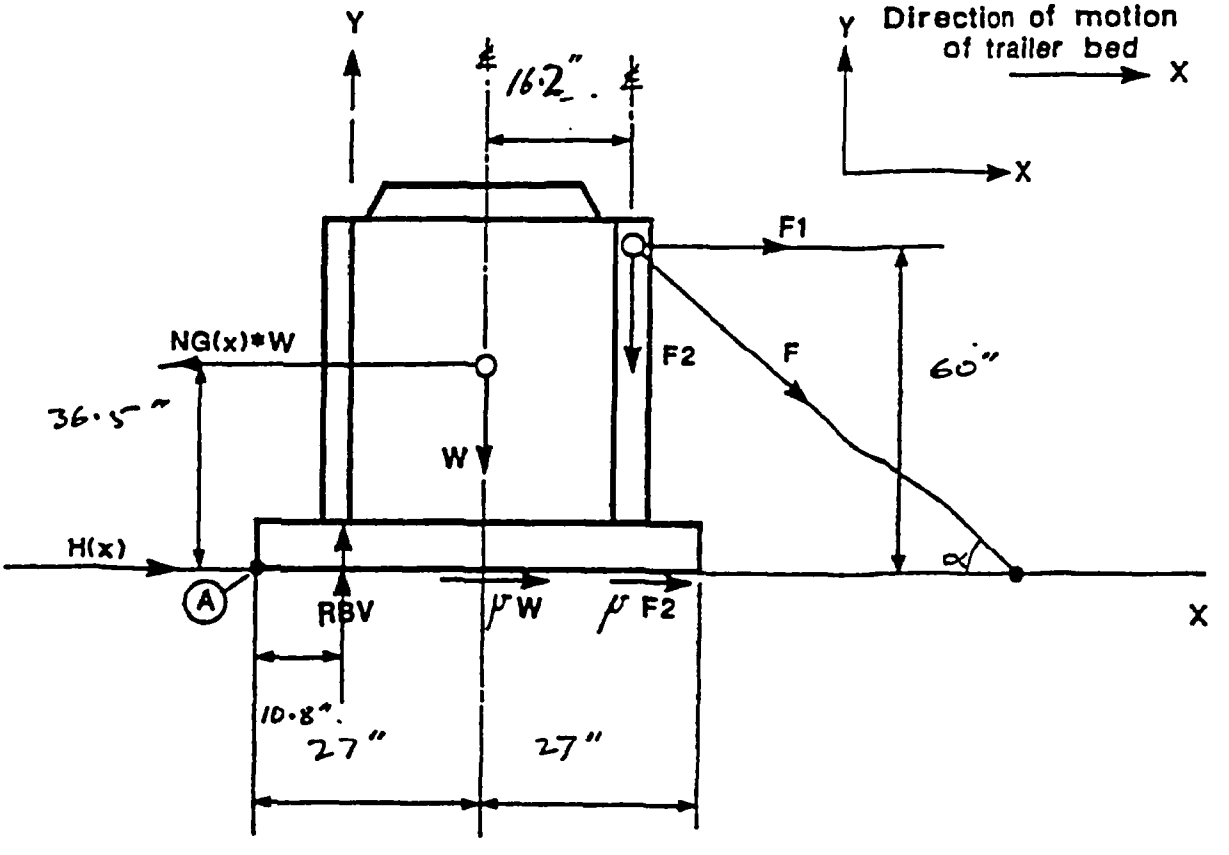

FIGURE A6.2.4

FORCES: TIEDOWN MODE IN X-DIRECTION

3) Σ Moment about A

$$27W + 43.2x2F2 + 60x2F1 - RBVx10.8 = NG(x)\ xWx36.5$$

Substitute for RBV & NG(x) & F1 & F2

$$27W + 86.4F2 + 120F1 - 10.8(W+2F2) = 2xWx36.5$$
$$27W + 86.4x0.707F + 120x0.7F - 10.8W - 15.27F = 73W$$
$$129.81\ F = 56.8W$$
$$F = 0.4375W$$
$$F = 0.4375x12{,}000$$
$$F = 5{,}250 \text{ lbs}$$

Estimate Component Forces

$$F2 = 0.707\ F = 0.707 \times 5{,}250 = 3{,}711 \text{ lbs}$$
$$F1 = 0.7F = 0.7 \times 5{,}250 = 3{,}675 \text{ lbs}$$

Estimate the chocking Force H(x)

From $NG(x)xW - 2F1 - \mu W - 2\mu F2 - H(x) = 0$

$$2W - 2x0.7F - 0.4W - 2x0.4x0.707F = H(x)$$
$$1.6W - 1.4F - 0.5656F = H(x)$$
$$1.6W - 1.9656F = H(x)$$
$$1.6 \times 12{,}000 - 1.9656 \times 5{,}250 = H(x)$$
$$8{,}880 \text{ lbs} = H(x)$$

Estimate the Reaction Force RBV

$$RBV = W + 2F2$$
$$= 12{,}000 + 2 \times 3{,}711$$
$$= 19{,}422 \text{ lbs}$$

Summary F1 = 3,675 lbs F2 = 3,711 lbs
F = 5,250 lbs H(x) = 8,880 lbs
RBV = 19,422 lbs

3.1.3 Sideways (lateral) - 1G Acceleration Applied

See Figure A6.2.5.

In normal mode, the vehicle (trailer bed) is moving in X-direction. All 4 cable (P1, P2, P3, P4) are in tension. As the vehicle turns, because of centrifugal effect, a sideways - NG(Z) deceleration is applied; therefore there is a tendency for the container to overturn around line XX; subsequently the cable P1 & P2 are slack and P3 & P4 are in tension resisting the deceleration load NG(Z)xW.

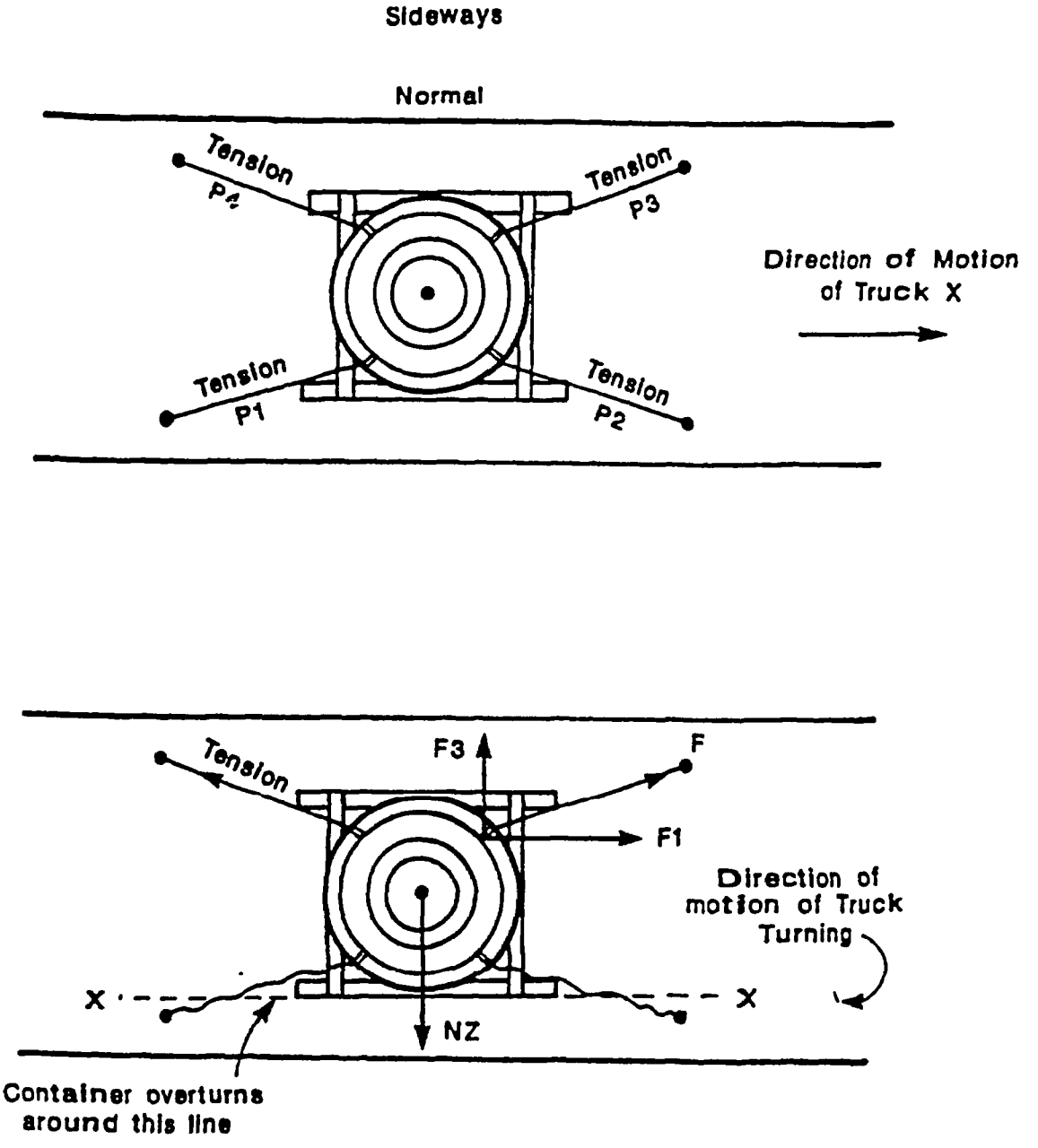

FIGURE A6.2.5
TIEDOWN MODE IN Z-DIRECTION

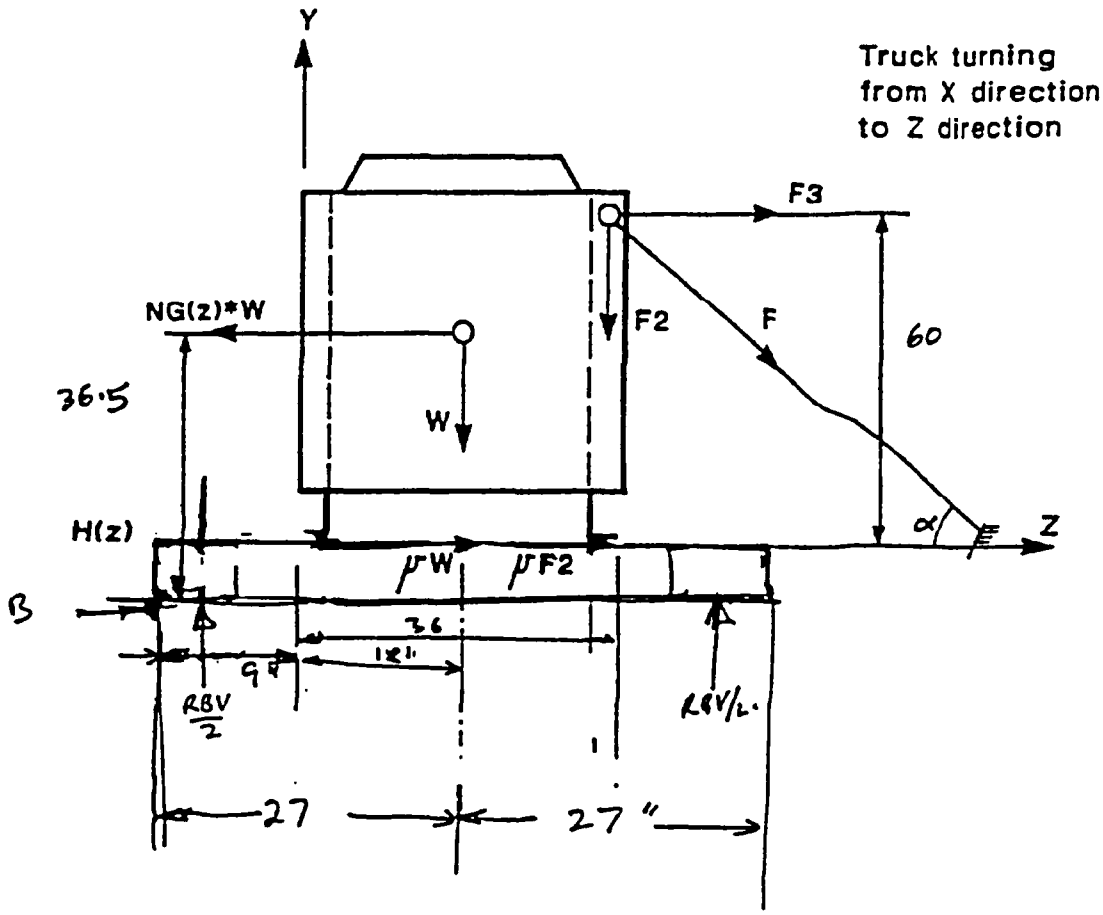

FIGURE A6.2.6

FORCES: TIEDOWN MODE IN Z DIRECTION (SIDEWAYS)

Analysis of Forces

1) Forces in Y direction

$$2F2 + W - RBV = 0$$
$$RBV = W + 2FZ$$

2) Forces in Z direction

$$NG(Z) \times W - 2F3 - \mu W - 2\mu F2 - H(Z) = 0$$

3) Moment about B

$$NG(Z) \times W \times 36.5 - 2F3 \times 60 - 2F2 \times 36 - 18\ W = 0$$

Note:

The contribution due to RBV/2 is ignored as the container overturns around B, the contact between the channel and the floor bed will be lost.

4) $Fw = F \sin \alpha = F \sin 45^\circ = 0.707\ F$

5) $F3 = F \cos \alpha \sin \beta = F \times 0.707 \times .1736 = 0.123F$
($\beta = 10^\circ$) (See Figure A6.2.2).

From 3), plugging in valves of NG(Z), W, F2 & F3

$$NG(Z) \times W \times 36.5 - 120F3 - 72\ F2 - 18\ W = 0$$
$$1 \times W \times 36.5 - 120 \times 0.123F - 72 \times 0.707F - 18\ W = 0$$
$$18.5\ W - 65.66\ F = 0$$
$$F = 0.2817 \times W$$
$$F = 3{,}380 \text{ lbs}$$

Estimate chocking force H(Z) from 2)

$$NG(Z) \times W - 2F3 - \mu W - 2\mu F2 - H(Z) = 0$$
$$1 \times 12{,}000 - 2 \times 0.123F - 0.4 \times 12{,}000 - 2 \times 0.4 \times 0.707F = H(Z)$$
$$12{,}000 - 0.246 \times 3{,}380 - 4{,}800 - 0.5656 \times 3{,}380 = H(Z)$$
$$12{,}000 - 831. - 4{,}800 - 1{,}912 = H(Z)$$
$$4{,}457. \text{ lbs} = H(Z)$$

Estimate Reaction Force from Base (RBV)

$$RBV = W + 2F2$$
$$RBV = 12{,}000 + 2 \times 0.707 \times F$$
$$RBV = 12{,}000 + 1.414 \times 3{,}380$$
$$RBV = 12{,}000 + 4{,}779.$$
$$RBV = 16{,}779. \text{ lbs}$$

Estimate Component Forces F2 & F3

$$F2 = 0.707F = 0.707 \times 3{,}380 = 2{,}390. \text{ lbs}$$
$$F3 = 0.123F = 0.123 \times 3{,}380 = 416. \text{ lbs}$$

3.1.4 Vertical - 3G Upward Acceleration Applied

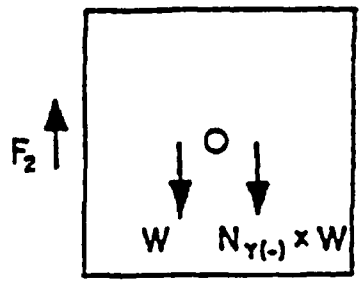

FIGURE A6.2.7

FORCES IN VERTICAL UP DIRECTION

In normal mode, the vehicle (trailer bed) is moving in X direction. All 4 tiedown cables (P1, P2, P3, P4) are in tension. As the vehicle goes over bumps, there is a vertical up acceleration applied to the package; in this circumstances, all 4 tiedown cables are in tension.

Forces in Y-direction

$$4F2 = NG(Y+)xW - W$$
$$4F2 = 3W - W$$
$$F2 = 0.5W$$
$$F2 = 0.5 \times 12{,}000 = 6{,}000 \text{ lbs}$$

Also $F2 = 0.707F$
$F = F2/0.707 = 6{,}000/0.707 = 8{,}456.$ lbs

3.1.5 Vertical - 2G Downward Acceleration Applied

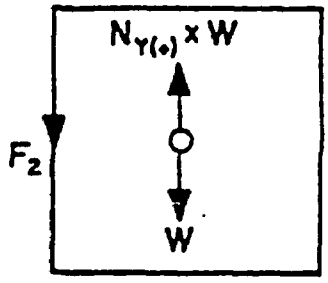

FIGURE A6.2.8
FORCES IN VERTICAL DOWN DIRECTION

Forces in Y-direction

$\Sigma Y = 0$ $\qquad$ $F2 = NG\ (Y-) \times W + W$

As 4 cables are slack, F2 = 0, therefore F = 0

The Reaction Base force, RBV

$$\begin{aligned} RBV &= NG(Y-) \times W + W \\ &= 2W + W \\ &= 3W \\ &= 3 \times 12{,}000 \\ &= 36{,}000 \text{ lbs} \end{aligned}$$

3.1.6 Summary

The summary of tiedown forces when the F-168 package is subjected to accelerations as per RDT is given in Table A6.2.2

TABLE A6.2.2

ACCELERATION	FORWARD	LATERAL	VERTICAL UP	VERTICAL DOWN	Σ FORCES
Tiedown Component Force F1	3,711	0	-	-	3,711
F2	3,675	2,390	6,000	0	12,065
F3	0	416.	-	-	416.
Tiedown Combined Force F	5,250	3,380	8,456	0	
Chocking Force H( )	H(S)=8,880.	H(Z)=4,457.	0	0	
Base Reaction RBV	19,422.	16,779.	0	36,000 lbs	

To arrive at combined tiedown force F, resulting from forward, lateral, vertical up or down acceleration, the following method is used:

$$F^2 = (F1(NG(x)) + F1(NG0) + F1\ (NG(Z)))^2 + (F2\ (NG(X)) + F2\ (NG(Y)) + F2\ (NG(Z)))^2 + (F3\ (NG(X)) + F3\ (NG(Y)) + F3\ (NG(Z))^2$$

$$F^2 = (3{,}711)^2 + (3{,}675 + 2{,}390 + 6{,}000)^2 + (416.)^2$$

$$F^2 = (3{,}711)^2 + (12{,}065)^2 + (416.)^2$$

$$F = 12{,}630 \text{ lbs}$$

3.1.7 Analysis of Lift Lug Components

Using the forces as per Table A6-2.2, the stresses in the following subcomponents of the lift lug fin will be estimated.

1) The lift lug fin
2) The shell of the container
3) The welds (joining the shell to the lift lug)

3.1.7.1 Lift Lug Fin

See Figure A6.2.9
Component Force F2 = 12,065 lbs

Tensile Stress

$$\sigma = \frac{F2}{AX} = \frac{12{,}065}{0.75 \times 2.0}$$

$$\sigma = 8{,}043.\ \text{psi}$$

$$\text{Safety Factor (SF)} = \frac{\text{Yield Stress}}{\text{Applied Stress}}$$

$$= \frac{36{,}000}{8{,}043}$$

$$= 4.5$$

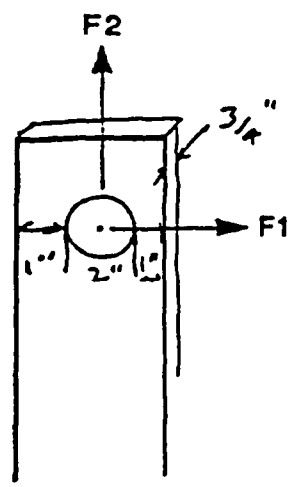

FIGURE A6.2.9
LIFT LUG FIN

3.1.7.2 Shell of the Container

(A) Shear Stress in the cylindrical shell

$$\tau = \frac{F2}{\text{Shear Area}}$$

$$= \frac{12,065}{2x0.375x41.375}$$

$$= \frac{12,065}{31.03}$$

$$= 389. \text{ psi}$$

(B) Stress in cylindrical shell, under the tiedown point.

Moment M = F2 x Moment Arm
= 12,065 x 2.0
= 24,130. in lbs

Equivalent force, P

$$P \times \frac{41.375}{2} \times \frac{2}{3} \times 2 = M$$

$$P \times 27.58 = 24,130.$$

$$P = 875. \text{ lbs}$$

Hoop Stress $\sigma_H = 0.46 \times 875./(2x(0.375)^2) = 1,431.$ psi
Longitudinal Stress $\sigma_L = 0.35 \times 875./(2x(0.375)^2) = 1,089.$ psi

$$\text{Safety Factor (SF)} = \frac{\text{Yield Stress}}{\text{Applied Stress}}$$

$$= \frac{36,000}{1,431}$$

$$= 25.1$$

3.1.7.3 Stresses in the Weldment

As the weld between the shell and the lift lug fin is subjected to tiedown component forces in X, Y, Z, direction, formula to eliminate weld stresses have been derived and the reference material attached at the end of this Appendix. This formula is.

$$SR = [(0.09365\ FV + 0.2939\ FH)^2 + (0.2937\ FL)^2 + (0.06835\ FV)^2]^{0.5}$$

where SR = resultant weld stress
FH = horizontal component (x) of tiedown force
FV = vertical component (y) of tiedown force
FL = lateral component (z) of tiedown force

Using the nomenclature define earlier

FH = F1 = 3,711 lbs
FV = F2 = 12,065 lbs
FZ = F3 = 416 lbs

$$SR = [(0.09365 \times 12{,}065 + 0.2939 \times 3{,}711)^2 + (0.2937 \times 416)^2 + (0.06835 \times 12.065)^2]^{0.5}$$

$$= [(1{,}130 + 1{,}090)^2 + (122)^2 + (825)^2]^{0.5}$$

$$= [5{,}623{,}910]^{0.5} = 2{,}371 \text{ psi}$$

$$\text{Safety Factor (SF)} = \frac{0.3 \times 70{,}000}{2{,}371}$$

$$= 8.8$$

4. LOADS AND STRESSES IN THE LIFT LUG BASED ON USNRC CFR 10.7 (31.d) REGULATIONS

4.1 Analysis of Forces

Nomenclature

F = Force per lift lug (tiedown) applied by cable or chain
F1 = Force in X-direction per lift lug
F2 = Force in Y-direction per lift lug
F3 = Force in Z-direction per lift lug
NG( ) = G-loads as per Table A6.2.1
W = Weight of container
M(X) = Chocking force in X-direction
M(Z) = Chocking force in Y-direction
RBV = Reaction force of the base of container
μ = Coefficient of friction
α,β = Angles between tiedown point on the container and tiedown point on the trailer bed (vehicle). (See Figure A6.2.2)

4.1.1 Forwards/Backwards - 10 G Acceleration Applied

$$F1 = F \cos \alpha \cos \beta$$
$$= F \cos 45^\circ \cos 10^\circ$$
$$= 0.7F$$

$$F2 = F \sin \alpha$$
$$= F \sin 45^\circ$$
$$= 0.707$$

F2 = Tiedown force per lift lug applied by cable or chain.

Coefficient of Friction = 0.4

Weight of Container W = 12,000 lbs

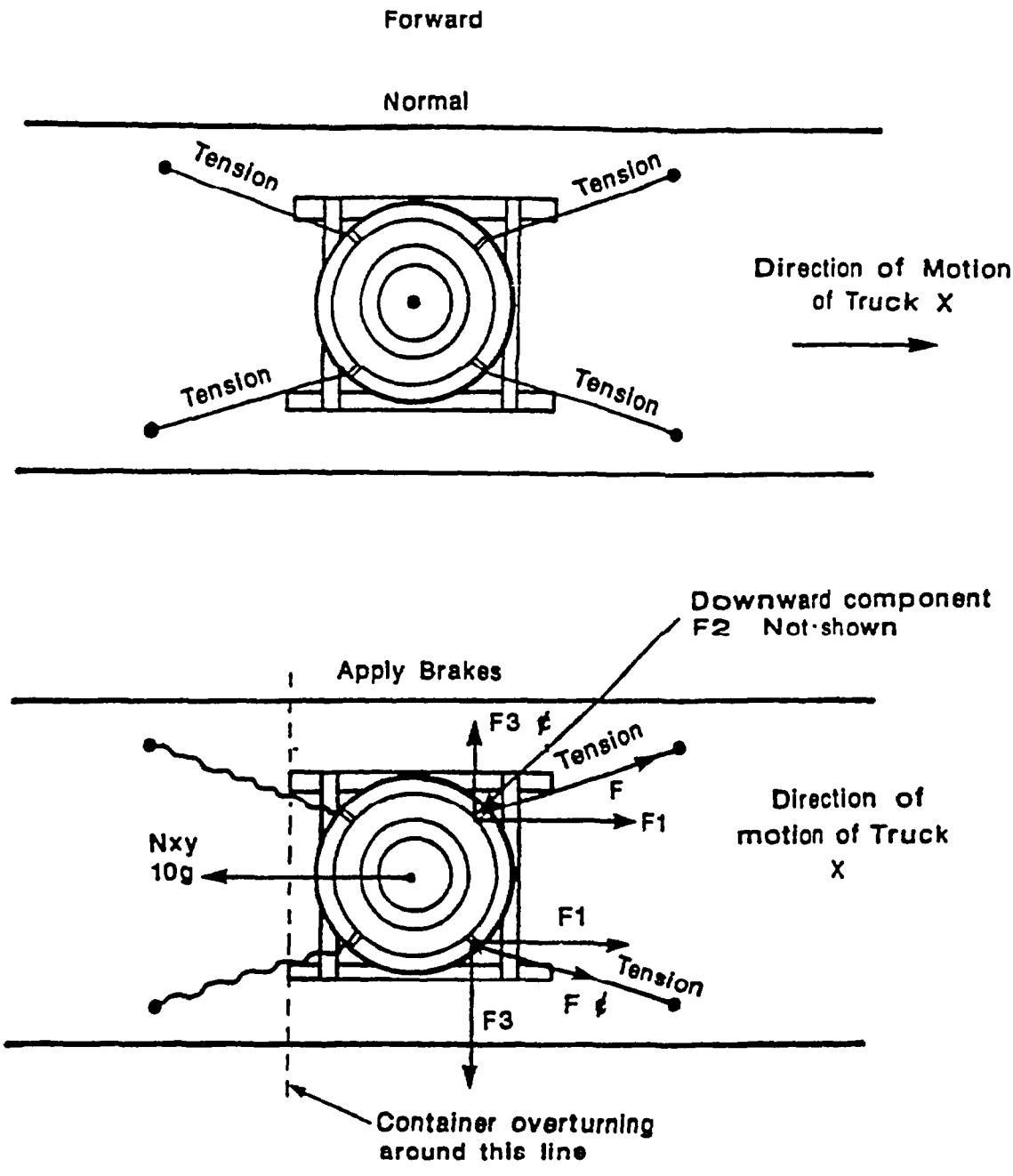

FIGURE A6.2.10

TIEDOWN MODE IN X-DIRECTION (FORWARD)

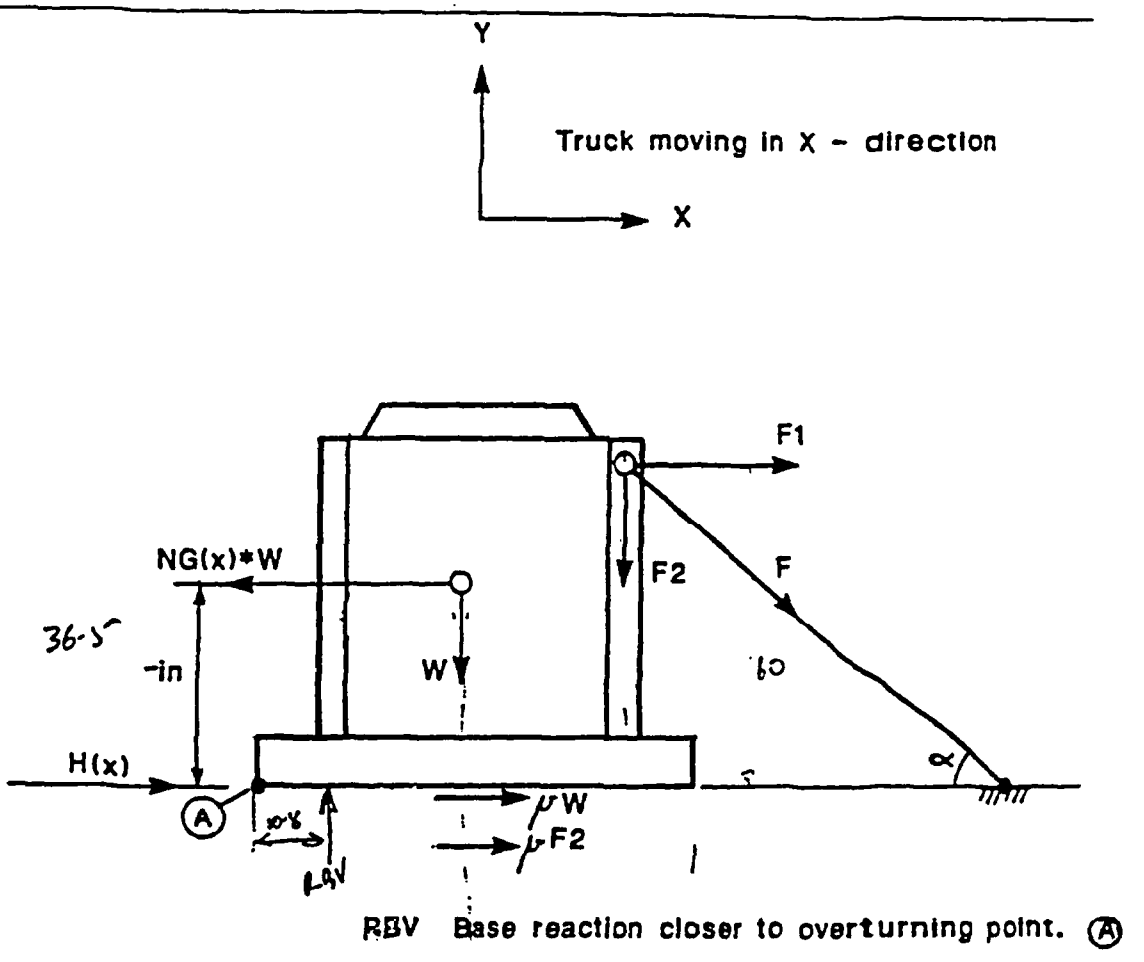

FIGURE A6.2.11

FORCES: TIEDOWN MODE IN X-DIRECTION (FORWARDS)

The following 3 equations of static equilibrium are used to calculate forces in XY plane.

1) Σ Forces in Y-direction

$$W + 2F2 - RBV = 0$$

$$W + 2F2 = RBV$$

$$W + 2 \times 0.707 \times F = RBV$$

2) Σ Forces in X-direction

$$Nx \times W - 2 \times F1 - \mu W - HX - 2\mu F2 = 0$$

3) Taking moments about A

Nx x W x 36.5 - 43.2 x F2 x 2 - 2F1 x 60 + RBV x 10.8 - 27W = 0

10W x 36.5 - 86.4F2 - 120F1 + 10.8RBV - 27W = 0

365W - 86.4 x 0.707F - 120 x 0.7F + 10.8 (W + 1.414F) - 27W = 0

365W - 61.1F - 84F + 10.8W + 15.3F - 27W = 0

348.8W - 129.8F = 0

$$F = \frac{348.8 \times W}{129.8}$$

F = 2.69

F = 2.69 x 12,000

F = 32,280 lbs

Force per lug F = 32,280 lbs

<u>Base Vertical Reaction</u>

RBV = W + 1.414F
= 12,000 + 1.414 x 32,280
= 12,000 + 46,380
= 58,380 lbs

Chocking Force in direction of X

Nx x W - 2F1 - μW - HX - 2μF2 = 0
10W - 2 x 0.7F - 0.4W - HX - 2 x 0.4 x .707F = 0
9.6W - 1.4 - 566F = HX
9.6 x 12,000 - 1.9656 x 32,280 = HX
115,200 - 58,380 = HX
56,820 = HX

F = 32,280 lbs
RBV = 58,380 lbs
HX = 56,820 lbs
F2 = 0.707F = 22,820 lbs
F1 = 0.7F = 22,600 lbs

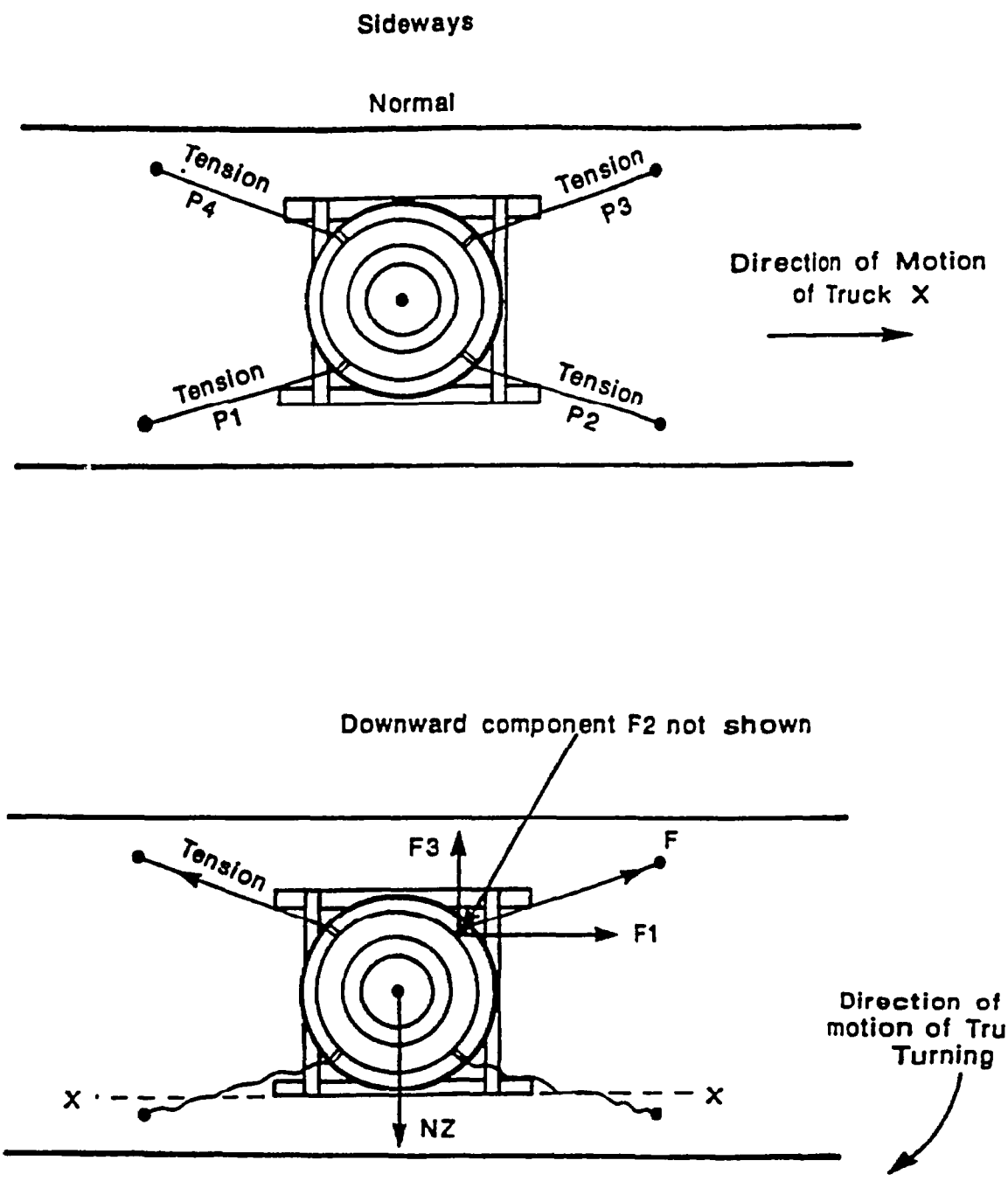

FIGURE A6.2.12

4.1.2 Sideways - 5G Acceleration Applied

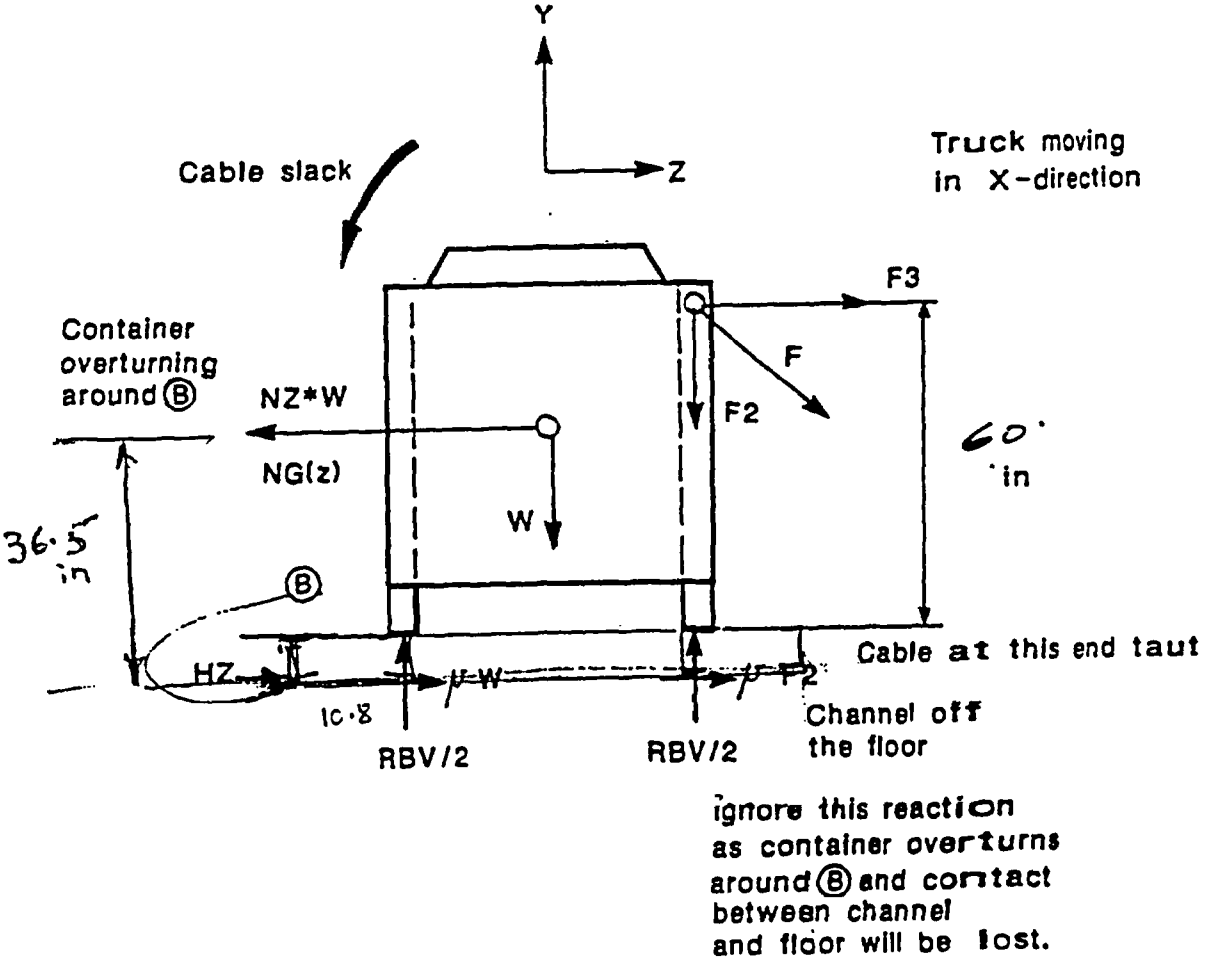

FIGURE A6.2.13

1) Forces Σx: $NG(Z) \times W = \mu W + HZ + 2F3$

2) Forces Σy: $Wg + F2 \times 2 = \frac{RBV}{2}$

Moment about B

3) $W \times 27/2 + 2 \times F2 \times 43.2 + 2 \times F3 \times 60 = NG(Z) \times W \times 36.5$

4) $F2 = F \sin \alpha = F \text{ Sin } 45^\circ = 0.707F$
$F2 = .707F$

5) $F3 = F \cos \alpha \cos (90^\circ - \beta) = F \times .707 \times .1736$
$F3 = .123F$

Eqn. 3

$$27W + 86.4\ F2 + 120\ F3 = 5W \times 36.5$$
$$27 \times 12{,}000 + 86.4 \times 0.707F + 120 \times .123F = 182.5 \times 12{,}000$$
$$75.84F = 2{,}190{,}000.$$
$$F = 28{,}877 \text{ lbs}$$

$F2 = .707F = 20{,}416$ lbs
$F3 = .123F = 3{,}552$ lbs

Chocking Force: $HZ = NG(Z) \times W - \mu W - 2F3$
$= 5 \times 12{,}000 - 0.4 \times 12{,}000 - 7{,}104$
$= 48{,}100$ lbs

Reaction RBV $12{,}000 + 2F2 = \frac{RBV}{2}$

$12{,}000 + 40{,}832 = \frac{RBV}{2}$ $\quad RBV = 104{,}664$ lbs

C) <u>VERTICAL UP</u>

Forces in vertical UP direction (Figure A6.2.7)

Forced in Y-Direction
All 4 cables are effective
$4\ F2 = NG(Y+) \times W - W$
& $F2 = 0.707F$

$4F2 = 2 \times 12{,}000 - 12{,}000$
$F2 = \frac{12{,}000}{4} = 3{,}000$

$0.707\ F = 3{,}000$ lbs
$F = 3{,}000/.707 = 4{,}243$ lbs

D) VERTICAL DOWN

RBV = NG(Y-) x W + W
RBV = 0 x W + 12,000
RBV = 12,000 lbs

TABLE A6.2.3
FORCE V/S ACCELERATION MODE MATRIX

ACCELERATION	FORWARD XY	SIDEWAYS LATERAL YZ	VERTICAL UP ZX	VERTICAL DOWN ZX
	FORCES			
Tiedown Component Force F1	22,600	0	-	-
F2	22,820	20,416	3,000	0
F3	0	3,552	-	-
Combined F	32,280	28,877	4,243	0
Chocking H	56,820	48,100	0	0
Base Reaction RBV	58,380	104,664	0	12,000

To arrive at the combined F (due to forward, backward lateral, vertical up or down combined accelerations), the component forces are vertically added as per following method.

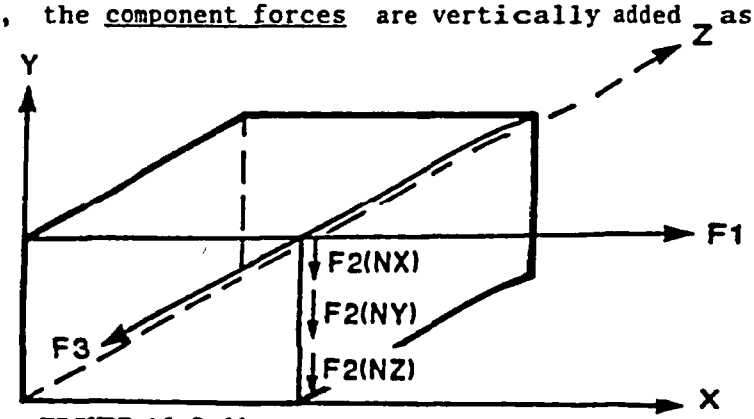

FIGURE A6.2.14

$$F^2 = F1^2 + \{F2(NX) + F2(NY) + F2(NZ)\}^2 + F3^2$$

$$F^2 = (22.6^2 + (22.82 + 20.416 + 3.0)^2 + 3.552^2)\ (10^3)^2$$

$$F = (510.7 + 2137.8 + 12.6)^{0.5} \times 10^3$$

$$F = (2{,}661.1)^{0.5} \times 10^3$$

$$F = 51{,}590$$

$$F = 51{,}590 \text{ lbs}$$

Force per tiedown point F = 51,590 lbs

$\alpha = 45^\circ$ $\beta = 10^\circ$

$F2 = F \sin \alpha = 0.707F$
$F1 = F \cos \alpha \cos \beta = 0.696F$
$F3 = F \cos \alpha \sin \beta = 0.123F$

F = 51,590 lbs

F1 = 0.696 x 51,590 = 35,906 lbs per lift lug
F2 = 0.707 x 51,590 = 36,474 lbs per lift lug
F3 = 0.123 x 51,590 = 6,345 lbs per lift lug

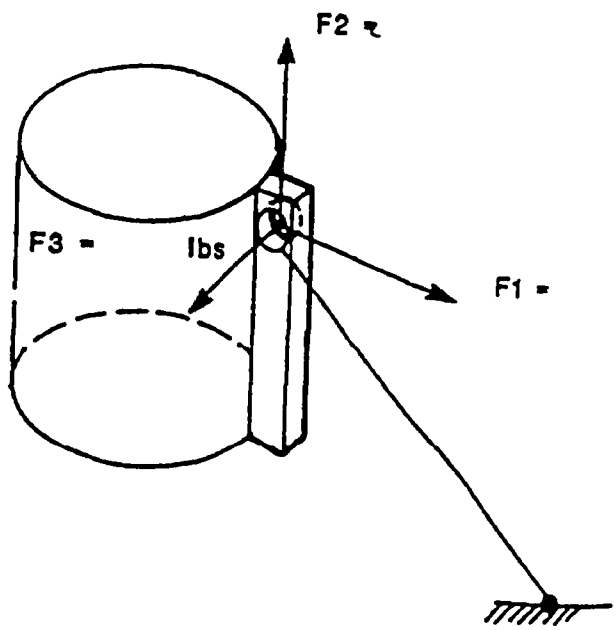

FIGURE A6.2.15

4.2 Stresses in Lift Lug Components

Using these forces, the stresses in the following subcomponents of lift lug will be estimated.

1) Lift Lug
2) Shell of the container
3) Welds (joining the shell to lift lug fin)

1) Lift Lug

- component forces as per figure A6.2.16

Tensile stress, σ

$$\sigma = \frac{F2}{Ax} = \frac{36,474}{0.75x2}$$

$$\sigma = 24,316 \text{ psi}$$

$$S.F. = \frac{Y.S}{\text{Applied Stress}} = \frac{36,000}{24,316} = 1.5$$

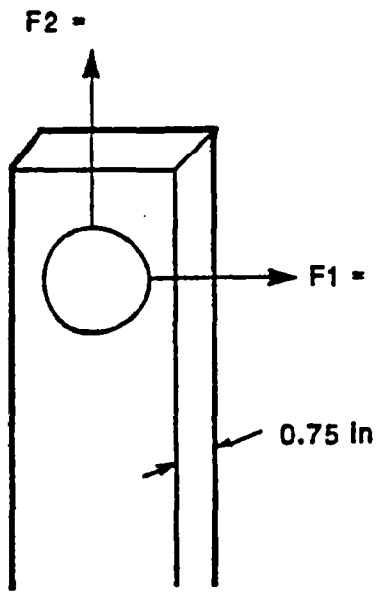

FIGURE A6.2.16

2) Shell of the Container

2.1) Stress in cylindrical shell

$$\Sigma = \frac{F2}{\text{Shear Area}} = \frac{36,474}{31.03} = 1,175 \text{ psi}$$

2.2) Stress in cylindrical shell, under lift point

Moment M = F2 x Moment Arm
= 36,474 x 2
= 72,948 in-lbs

$$P \times \left(\frac{41.375}{2} \times \frac{2}{3}\right) \times 2 = M = 72,948$$

$$P = 2,645 \text{lbs}$$

$$\sigma_H = 0.46 \times \frac{2,645}{2x(0.375)^2} = 4,326 \text{ psi}$$

$$\sigma_L = 0.35 \times \frac{2,645}{2x(0.375)^2} = 3,291 \text{ psi}$$

$$\text{Safety Factor (S.F.)} = \frac{\text{Y.S. (36000 psi)}}{4,326} = 8.3$$

3) Stresses in the Weldment

Formula derived (see attached reference) are used

$$SR = [(0.09365\ FV + 0.2939\ FH)^2 + (0.2937\ FL)^2 + (0.06835\ FV)^2]^{0.5}$$

FV = F2 = 36,474 lbs
FH = F1 = 35,906 lbs
FL = F3 = 6,345 lbs

$$SR = [(0.09365 \times 36,474 + 0.2939 \times 35,906)^2 + (0.2937 \times 6,345)^2 + (0.06835 \times 36,474)^2]^{0.5}$$

$$= (195.12 + 3.47 + 6.21)^{0.5} \times 10^3$$
$$= 14,310 \text{ psi}$$

$$S.F. = \frac{0.3 \times UTS}{\text{Applied Stress}}$$

$$= \frac{0.3 \times 70,000}{14,310}$$

$$= 1.5$$

5. CONCLUSION

5.1 Using RDT Guidelines

1) It is estimated that the cable tension will be 12,630 lbs (Combined F).

2) It is further estimated that

   2.1) the maximum stress in the lift lug (eye section) is 8,040 psi; the safety factor (defined as Allowable Stress (Yield Stress or U.T.S/Applied Stress) is 4.5.

   2.2) the maximum stress in the cylindrical shell of container proper under the lift lug is 1,430 psi; the safety factor = 25.

   2.3) the maximum stress in the weldment between the lift lug and the shell is 2,370 psi, the safety factor = 8.8.

5.2 Using USNRC CFR (Reference 11) Guidelines

1) It is estimated that the cable tension will be 51,590 lbs (combined F).

2) It is further estimated that

   2.1) the maximum stress in the lift lug (eye-section) is 24,316 psi; the safety factor = 1.5.

   2.2) the maximum stress in the cylindrical shell of the container proper, under the lift lug is 4,830 psi; the safety factor = 8.3.

   2.3) the maximum stress in the weldment between the lift lug and the shell is 14,310 psi; the safety factor = 1.5.

5.3 The lift lug fin at the top of F-168 container is reinforced by a web (Dwg. F116802045). The analysis presented herein ignores any credit due to reinforcing effect of the web.

TIEDOWN (LIFT LUG) FORMULA FOR WELD STRESS

Analysis of Loading on Lifting Lug Fin by Tiedown Arrangement

The following estimate of a three dimensional combined load effect (forward, downward and lateral forces) is modelled after two dimensional examples suggested for calculating maximum stresses in eccentrically loaded welds.

References:

1) Spotts, M.F., Design of Machine Elements, Second Edition, Prentice-Hall, Inc. p.p. 227-230

2) Faires, V.M., Design of Machine Elements, Fourth Edition, The MacMillan Co., p.p. 508-512.

Considering Forward (Horizontal Force)

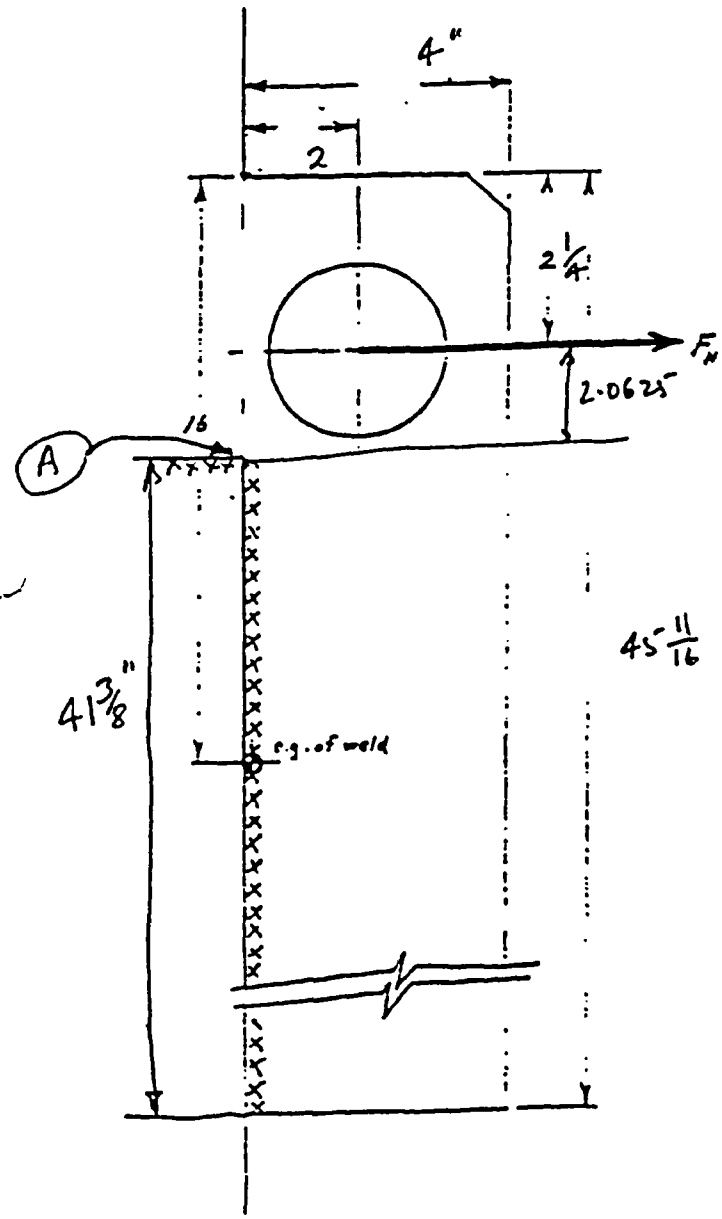

Two 1/4" welds - throat area

$$A = 2(0.707)\ (0.25)\ (41.375)$$

$$= 14.63 \text{ in}^2$$

Welds are taken as being located at the center of the throat area.

Moment of inertia of weld area about its center:

$$J_o = \frac{hl^3}{12} = \frac{Al^2}{12}$$

$$= \frac{14.63\ (41.375)^2}{12}$$

$$= 2{,}087 \text{ in}^4$$

$$\text{Uniform stress} = \frac{F_H}{A} = \frac{F_H}{14.63}$$

$$= 0.06835\ F_H \text{ psi}$$

The maximum resultant stress occurs at A

$$@\ r = 41.375/2 = 20.6875$$

Torsional stress

$$= \frac{Tr}{J} = \frac{F_H\ (22.75)\ \ (20.6875)}{2{,}087}$$

$$= 0.2255\ F_H \text{ psi}$$

which acts horizontally at A

:, Resultant stress

$$= 0.06835\ F_H + 0.2255\ F_H$$

$$= 0.2939\ F_H \text{ psi}$$

FIGURE A6.2.17
LIFT LUG FIN : HORIZONTAL FORCE FH

Considering Downward (Vertical Force)

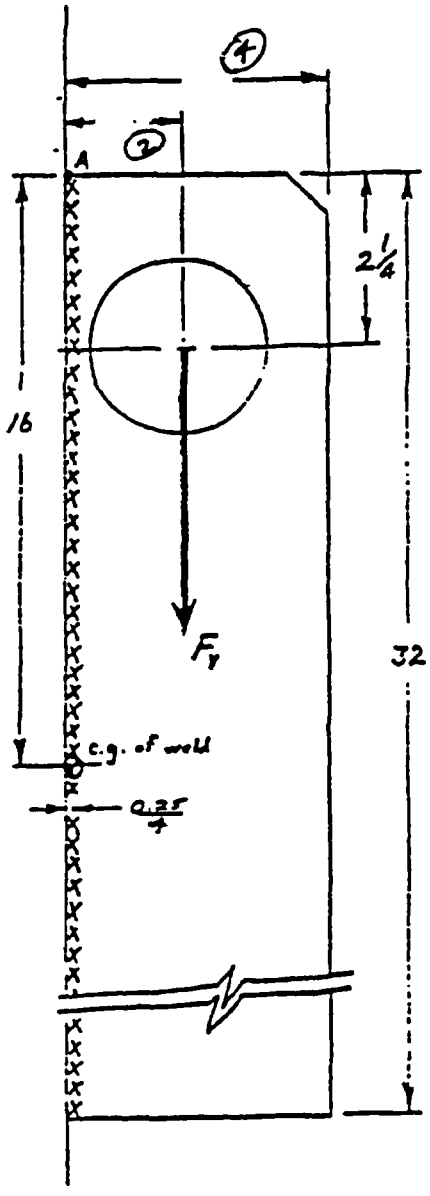

Throat area of 2 welds

$A = 14.63 \text{ in}^2$

Moment of inertia of weld area

$J_o = 2{,}087 \text{ in}^4$

Uniform stress

$$= \frac{F_v}{A} = \frac{F_v}{14.63} = 0.06835 \, F_v \text{ psi}$$

Maximum resultant stress occurs at A

@ r = 20.6875

$$\text{Torsional stress} = \frac{Tr}{J}$$

$$= F_v \left(2 - \frac{0.25}{4}\right)(20.6875)$$

$$= 0.09365 \, F_v \text{ psi}$$

which acts horizontally at A

FIGURE A6.2.18
LIFT LUG FIN : VERTICAL FORCE FV

Considering Lateral (Horizontal Force)

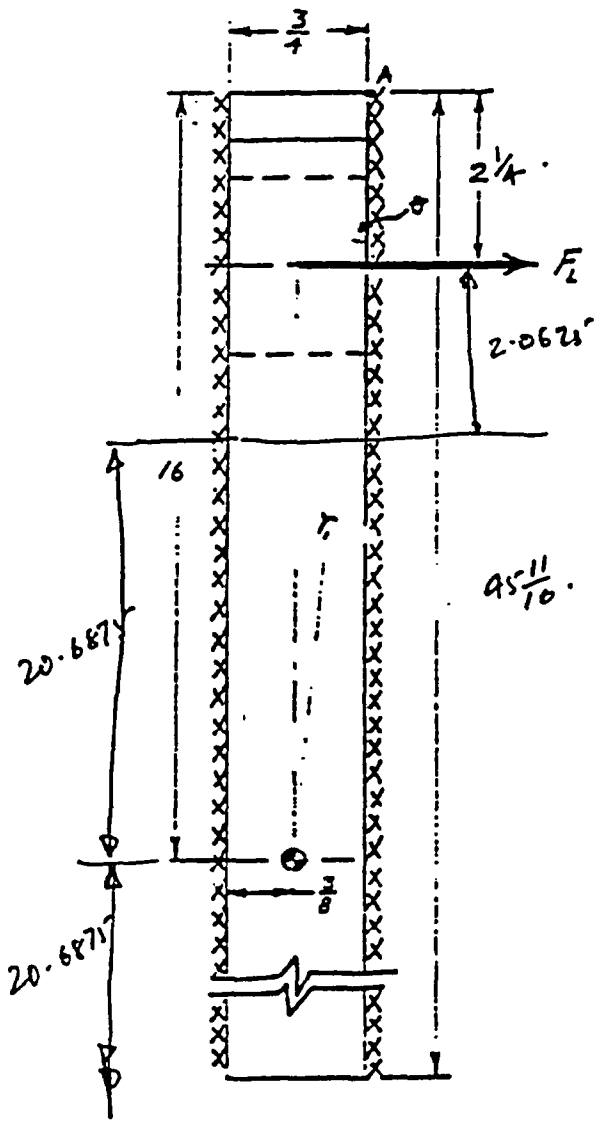

Throat area of 2 welds

$A = 14.63 \text{ in}^2$

Moment of inertia of welds about their center

$J_o = 2{,}087 \text{ in}^4$

Using parallel axis equation to find J for welds about c.g. of two welds

$J = J_o + A\, r^2$

$r = 0.375 + \frac{0.250}{4} = 0.4375 \text{ in}^4$

$J = 2{,}087 + 14.63(0.4375)^2$

$= 2{,}087 + 2.8$

$= 2{,}089.8 \text{ in}^4$

Uniform stress $= \frac{F_L}{A} = \frac{F_L}{14.63} = 0.06835\, F_L$

Maximum resultant stress occurs at A @ r_1

$r_1 = [16^2 + (0.375 + \frac{0.25}{4})^2]^{0.5}$

$= 20.692$ in

Torsional stress $= \frac{Tr}{J} = \frac{F_L\ (22.75)(20.692)}{2{,}089.8}$

$= 0.2253\, F_L$ psi

$= \tan^{-1} \frac{(0.4375)}{20.6875}$

$= 1.2°$ (insignificant)

Resultant stress $= 0.06835\, F_L + 0.2253 F_L$
$= 0.29365\, F_L$
acting at A, horizontally and perpendicular to F_N

FIGURE 16.2.19

Considering Bending (Horizontal Force)

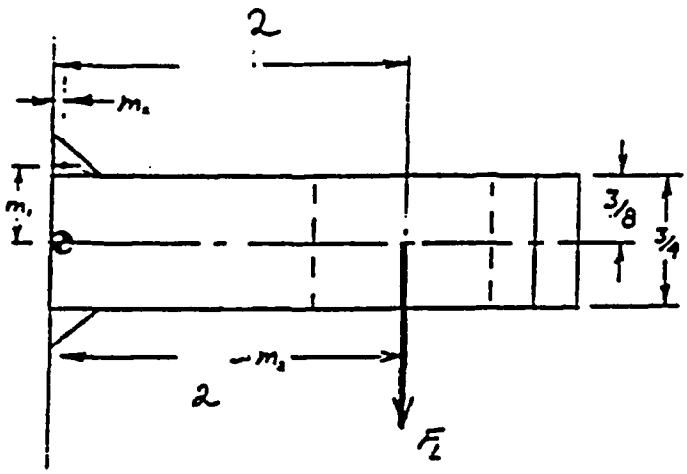

$m_1 = 0.375 + \frac{0.25}{4}$

$= 0.4375$ in

$m_2 = \frac{0.250}{4}$

$= 0.0625$ in

FIGURE A16.2.20

The uniform stress has been considered in the preceding analysis of the Lateral (horizontal force) = 0.06835 F_L.

Stress in weld due to bending:

$$s = \frac{Tr}{J} = \frac{F_L\ (1.9375)\ (0.4375)}{2{,}087}$$

$= 0.0004\ F_L$ psi considered negligible

Combined Stress

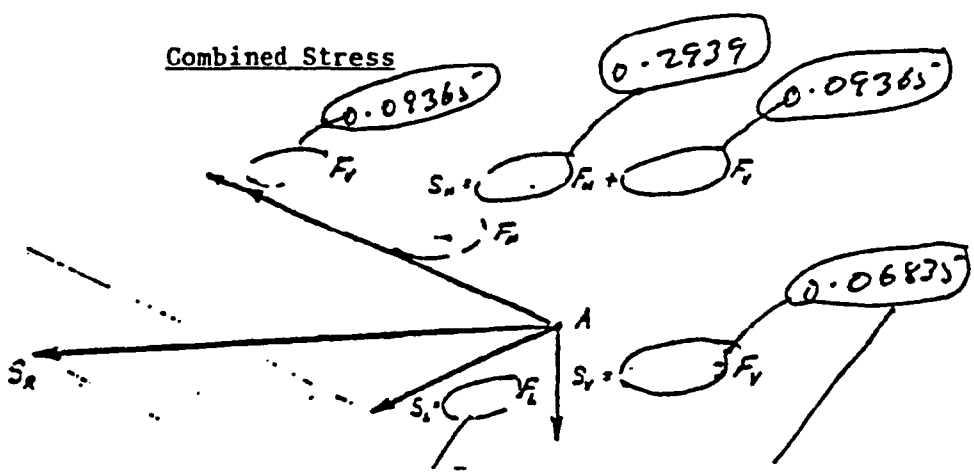

$$S_R = [(0.09\ 365\ F_V + 0.2939\ F_H)^2 + (0.2937\ F_L)^2 + (0.06835\ F_V)^2]^{0.5}$$

FIGURE A16.2.21
LIFT LUG FIN : LATERAL FORCE FL

Load Capacity of Fin Lug Welds Subjected to Three Dimensional

Combined Load Arrangement of Tiedown

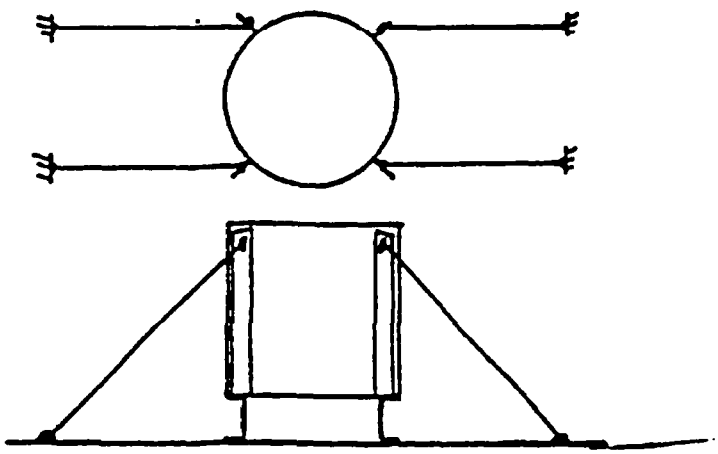

FIGURE A16.2.22

Considering an unlikely but pessimistic arrangement whereby the tiedown to a single lug was such that:

$$F_V = F_V = F_L = F$$

Then,

$$S_R = [(0.09365F + 0.2939F)^2 + (0.2937F)^2 + (0.06835F)^2]^{0.5}$$

$$= 0.431F$$

Using an ultimate shear strength of $S_S = 60{,}000\ (0.6)$

$$= 36{,}000 \text{ psi}$$

$$F_{max} = \frac{36{,}000}{0.431} = 83{,}527 \text{ lb}$$

:, Load in single tiedown $= F_R = F_H^2 + F_V^2 + F_L^2$

$$= 3F^2$$

$$= 1.7F$$

$$= 1.7\ (83{,}527)$$

$$= 141{,}995 \text{ lbs}$$

APPENDIX 9:
Radiation Surveys of F-168

SHIPPING CONTAINER - RADIATION SURVEY FORMAT

RADIATION SURVEY
READINGS IN MILLIROENTGENS PER HOUR

POSITION	SURVEY METER: GM Tube	SURVEY METER: Ion Chamber
	Make: BICRON Model: SURVEYOR 2000 S/N: A03208 Calibration Date: 01 DEC 01	Make: VICTOREEN Model: 471 S/n: 1368 Calibration Date: 02 APR 17

	AT 1 METRE FROM SURFACE	
1	4.0	3.0
2	4.5	5.0
3	3.5	3.0
4		
5		
6		
7		
8		

	METER IN CONTACT WITH SURFACE	
1	50	42
2	90	54
3	70	26
4		
5		
6		
7		
8		

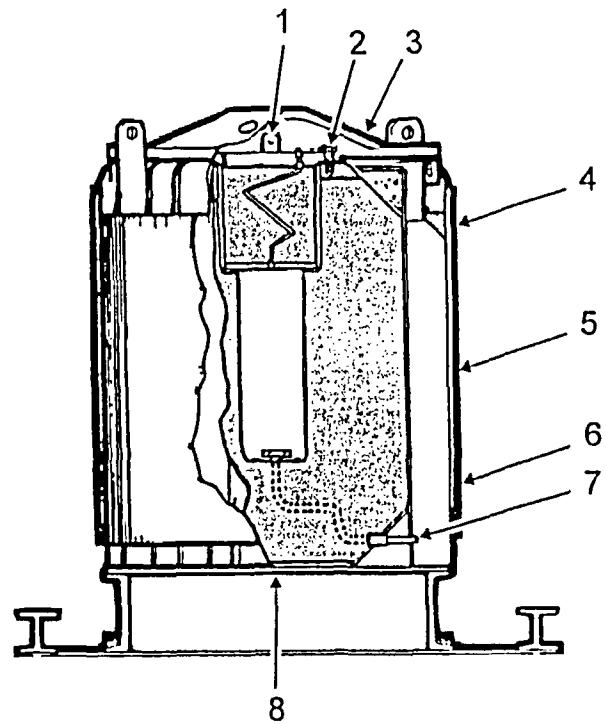

CONTAINER F-168 # 116 SURVEY DATE:
SURVEY AND ACTIVITY DATE: ACTIVITY DATE:
SOURCE DESCRIPTION: 16 x C188S
CURIES: 192,175 Ci
REMARKS: SURVEY OF RE-WORKED PLUG (BONNET OFF)

SURVEYED BY: Karen Hodgins
Cobalt Ops Process & Quality Control

APPROVED BY: W. Ware 2002 May 14
Senior Radiation Physicist

and

J. Ramsay 02.05.14
Package & Facility Engineering

NOTE: Measurements on contact and at 100 cm from contact are made with the GM Tube and Ion Chamber instruments.

CO-QC/TPF2-0001 Rev. 2

SHIPPING CONTAINER - RADIATION SURVEY FORMAT

RADIATION SURVEY
READINGS IN MILLIROENTGENS PER HOUR

POSITION	SURVEY METER: GM Tube	SURVEY METER: Ion Chamber
	Make: BICRON	Make: VICTOREEN
	Model: SURVEYOR 2000 SN: AU32Q	Model: 471 S/N: 1368
	Calibration Date: 01 DEC 01	Calibration Date: 02 APR 17
AT 1 METRE FROM SURFACE		
1	4.0	3.0
2	3.0	2.0
3	2.5	2.0
4		
5		
6		
7		
8		
METER IN CONTACT WITH SURFACE		
1	15	12
2	30	22
3	10	10
4		
5		
6		
7		
8		

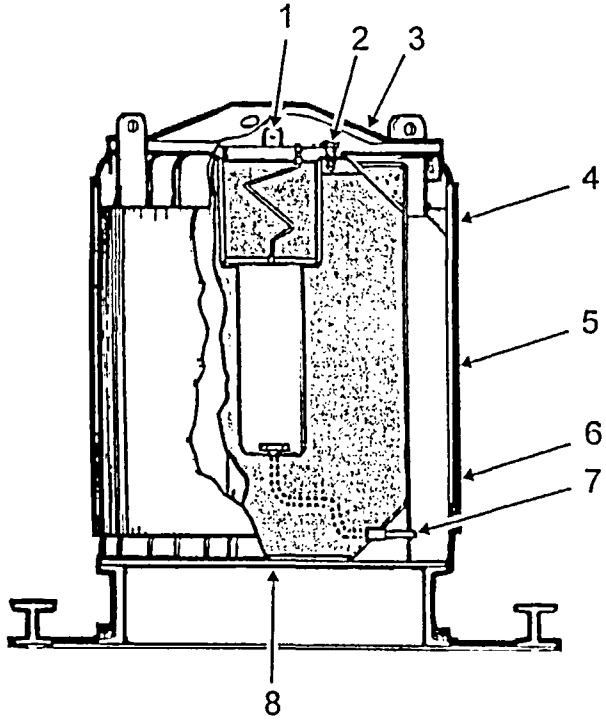

CONTAINER F-168 # 116

SURVEY AND ACTIVITY DATE: SURVEY DATE: 02/05/10 ACTIVITY DATE: 02/05/27

SOURCE DESCRIPTION: 16X C188S

CURIES: 192,175 Ci

REMARKS: SURVEY OF RE-WORKED PLUG (BONNET ON)

SURVEYED BY: [signature] Cobalt Ops Process + Quality Control

APPROVED BY: [signature] 2002 May 14 Senior Radiation Physicist and [signature] 02.05.14 Package & Facility Engineering

NOTE: Measurements on contact and at 100 cm from contact are made with the GM Tube and Ion Chamber instruments.

CO-QC/TPF2-0001 Rev. 2

SHIPPING CONTAINER - RADIATION SURVEY FORMAT

RADIATION SURVEY
READINGS IN MILLIROENTGENS PER HOUR

POSITION	SURVEY METER: GM Tube	SURVEY METER: Ion Chamber
	Make: BICRON Model: SURVEYOR 2000 S/N: A0328 Calibration Date: 01 DEC 01	Make: VICTOREEN Model: 471 S/N: 1368 Calibration Date: 02 APR 17

AT 1 METRE FROM SURFACE		
1	4.5	4.0
2	5.0	4.5
3	4.0	4.0
4		
5		
6		
7		
8		

METER IN CONTACT WITH SURFACE		
1	60	60
2	100	80
3	80	60
4		
5		
6		
7		
8		

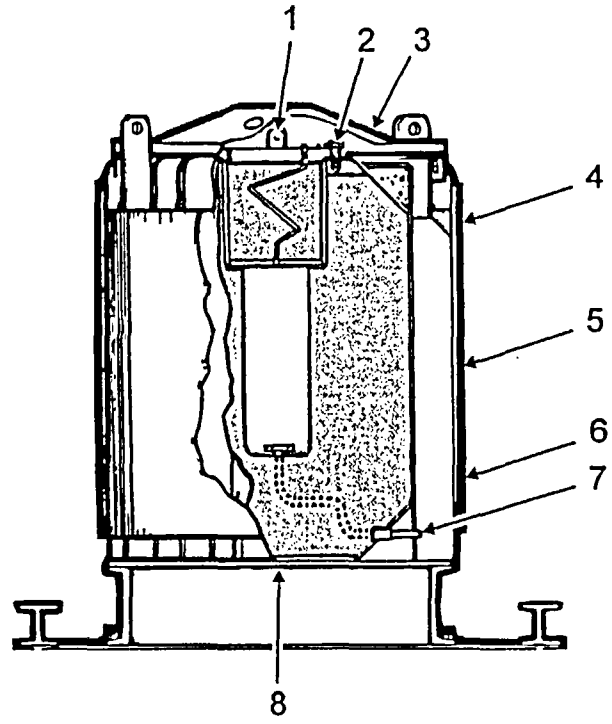

CONTAINER F-168 # 115

SURVEY AND ACTIVITY DATE: SURVEY DATE: 02/05/10
ACTIVITY DATE: 02/05/27

SOURCE DESCRIPTION: 17x C188S

CURIES: 192,107 Ci

REMARKS: SURVEY OF RE-WORKED PLUG (BONNET OFF)

SURVEYED BY: [signature] Cobalt Ops Process + Quality Control

APPROVED BY: [signature] 2002 May 14 Senior Radiation Physicist and [signature] 02.05.14 Package & Facility Engineering

NOTE: Measurements on contact and at 100 cm from contact are made with the GM Tube and Ion Chamber instruments.

CO-QC/TPF2-0001 Rev. 2

SHIPPING CONTAINER - RADIATION SURVEY FORMAT

RADIATION SURVEY
READINGS IN MILLIROENTGENS PER HOUR

POSITION	SURVEY METER: GM Tube	SURVEY METER: Ion Chamber
	Make: BICRON Model: SURVEYOR 2000 S/N: 10320 Calibration Date: 01DEC01	Make: VICTOREEN Model: 471 S/N: 1368 Calibration Date: 02 APR 17
AT 1 METRE FROM SURFACE		
1	3.0	3.0
2	3.5	2.5
3	3.0	2.0
4		
5		
6		
7		
8		
METER IN CONTACT WITH SURFACE		
1	20	20
2	50	30
3	10	10
4		
5		
6		
7		
8		

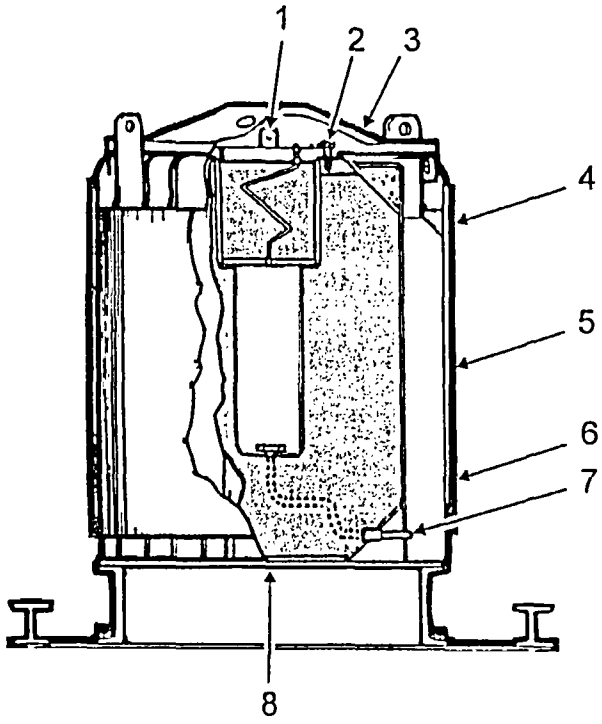

CONTAINER F-168 # 115

SURVEY AND ACTIVITY DATE: SURVEY DATE: 02/05/10 ACTIVITY DATE: 02/05/27

SOURCE DESCRIPTION: 17 x C188s

CURIES: 192,107 Ci

REMARKS: SURVEY OF RE-WORKED PLUG (BONNET ON)

SURVEYED BY: [signature] Cobalt Ops Process & Quality Control

APPROVED BY: [signature] 2002 May 14 Senior Radiation Physicist and [signature] 02.05.14 Package & Facility Engineering

NOTE: Measurements on contact and at 100 cm from contact are made with the GM Tube and Ion Chamber instruments.

CO-QC/TPF2-0001 Rev. 2

SHIPPING CONTAINER - RADIATION SURVEY FORMAT

RADIATION SURVEY
READINGS IN MILLIROENTGENS PER HOUR

POSITION	SURVEY METER: GM Tube	SURVEY METER: Ion Chamber
	Make: BICRON Model: SURVEYOR 2000 S/N: A0490 Calibration Date: 01 NOV 16	Make: VICTOREEN Model: 471 S/N: 1432 Calibration Date: 02 APR 17

	AT 1 METRE FROM SURFACE	
1	2.5	1.8
2	3.5	2.6
3	3.0	2.0
4		
5		
6		
7		
8		

	METER IN CONTACT WITH SURFACE	
1	20	16
2	10	28
3	15	12
4		
5		
6		
7		
8		

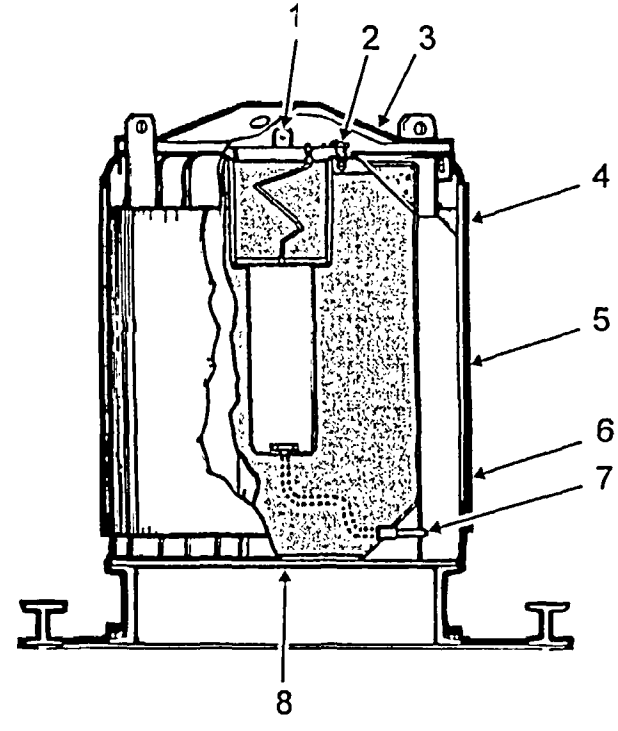

CONTAINER F-168 # 114

SURVEY AND ACTIVITY DATE: SURVEY DATE: 02-04-19
ACTIVITY DATE: 02-04-29

SOURCE DESCRIPTION: 18 X C188S

CURIES: 193,845 Ci

REMARKS: SURVEY OF NEW MODIFIED PLUG ONLY (1-3)
BONNET ON
(CRACK LEAKAGE COLLAR ON)

SURVEYED BY: [signature]
Cobalt Ops Process + Quality Control

APPROVED BY: [signature] 2012 04 24
Senior Radiation Physicist

and [signature] 02.04.24
Package & Facility Engineering

NOTE: Measurements on contact and at 100 cm from contact are made with the GM Tube and Ion Chamber instruments.

SHIPPING CONTAINER - RADIATION SURVEY FORMAT

RADIATION SURVEY
READINGS IN MILLIROENTGENS PER HOUR

POSITION	SURVEY METER: GM Tube	SURVEY METER: Ion Chamber
	Make: BICRON Model: SURVEYOR 2000 S/N: A0498 Calibration Date: 01 Nov 16	Make: VICTOREEN Model: 471 s/n: 1432 Calibration Date: 02 APR 17
AT 1 METRE FROM SURFACE		
1	4.5	3.6
2	5.0	4.0
3	4.5	3.8
4		
5		
6		
7		
8		
METER IN CONTACT WITH SURFACE		
1	60	40
2	100	60
3	80	58
4		
5		
6		
7		
8		

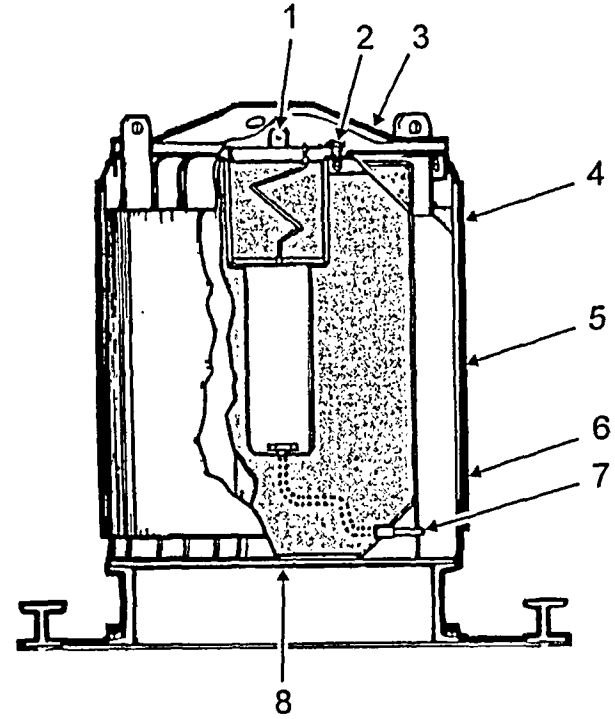

CONTAINER F-168 # 114

SURVEY AND ACTIVITY DATE SURVEY DATE: 02-04-19 ACTIVITY DATE: 02-04-29

SOURCE DESCRIPTION 18XC188S

CURIES 193,845Ci

REMARKS SURVEY OF NEW MODIFIED PLUG ONLY (1-3) BONNET OFF (CRACH LEAKAGE COLLAR ON)

SURVEYED BY: Karen Lynn Hodgins
Cobalt Ops Process + Quality Control

APPROVED BY: [signature] 2001 04 24 — Senior Radiation Physicist and [signature] 02.04.24 — Package & Facility Engineering

NOTE: Measurements on contact and at 100 cm from contact are made with the GM Tube and Ion Chamber instruments.

CO-QC/TPF2-0001 Rev 2

APPENDIX 10:
Radiation Surveys Before and After Regulatory Tests

APPENDIX 11:
Steady State Heat Transfer

References for Appendix 11

1. IAEA SS6 Regulations for the Safe Transport of Radioactive Materials, 1985 Edition, Supplement 1988.
33. IE0004.R90.19 Surface Temperature of F-168 Test Report.
34. IE0004.R90.21 Surface Temperature of F-168 with Heat Screen Test Report.

APPENDIX 12:
Sealed Source Certificates

The sealed sources used for transport in the F-168 or F-168-X packages meet the following ANSI/ISO classification or Special Form test requirements. The MDS Nordion classification and Special Form test certificates are included in this Appendix.

Sealed Source	Testing Classification
C-132	54435 (double-encapsulated C-133)
C-133	53424 (USNRC registered source)
C-146	64534 and Certified Special Form
C-151	64534
C-177	Meets Special Form Requirements
C-185	44434
C-188	Certified Special Form (USNRC registered source)
C-189	Similar to C-133
C-190	Similar to C-350 and C-351
C-198	64435 and Certified Special Form
C-199	Similar to C-133
C-200	Similar to C-133
C-232	Similar to C-133
C-238	56435
TC-239	53434
C-246	Similar to C-133
C-247	Similar to C-188
C-248	Similar to C-188
C-252	66535
C-306	54434 (USNRC registered source)
C-335	Similar to C-133
XC-318	Similar to AC-195 and AC-339
XC-325	Certified Special Form
C-348	Similar to C-133
C-442	Certified Special Form (USNRC registered source)
AC-191	43424
AC-195	43424 (Similar to AC-339)
AC-345	Similar to AC-195 and AC-339
AC-339	Meets Special Form Requirements
C-350	53424
C-351	53424
C-1000	Certified Special Form
All Other	Meets Minimum 53424 or Special Form Requirements

SEALED SOURCE
CLASSIFICATION DESIGNATION AND PERFORMANCE CERTIFICATE

SEALED SOURCES ARE CLASSIFIED IN ACCORD WITH STANDARDS ESTABLISHED BY THE AMERICAN NATIONAL STANDARDS INSTITUTE (ANSI) COMMITTEE N43-3

DATE: MARCH 31, 1976 **CERTIFICATE NO:** 43

CAPSULE MODEL: C-132, Type 64

ENG. DRWG. NO: G1132611/01 **CONTENTS:** Cobalt Pellets

OVERALL DIAMETER: 0.445 in. **OVERALL LENGTH:** 11.75 in.

CAPSULE MATERIAL: 316 L Stainless Steel **ENCAPSULATION:** Double

ANSI CLASSIFICATION AND PERFORMANCE STANDARD[1] E54435

CLASSIFIED PERFORMANCE STANDARD[2]			
TEST	CLASS	METHOD	REMARKS
TEMPERATURE	5	Comparison	Compared with C-133, Type 9. See Attached Sheet
EXTERNAL PRESSURE	4	Comparison	Compared with C-191, See Attached Sheet
IMPACT	4	Comparison	Compared with C-132, Type 60 See Attached Sheet
VIBRATION	3	Calculation	See Attached Sheet
PUNCTURE	5	Comparison	Compared with C-188 See Attached Sheet

[1] SEE DEFINITION ON REVERSE SIDE.
[2] SEE TABLE 1, PERFORMANCE STANDARDS ON REVERSE SIDE.

COMMENTS:

It is hereby certified that the described sealed source meets the specified standard as prescribed in ANSI Standard "Classification of Sealed Radioactive Sources", August 1967.

Signed .....

Title P.Q.A. - Engineer.....

Date March 31, 1976.....

ATOMIC ENERGY OF CANADA LIMITED
COMMERCIAL PRODUCTS, OTTAWA CANADA

SEALED SOURCE
CLASSIFICATION DESIGNATION AND PERFORMANCE CERTIFICATE

SEALED SOURCES ARE CLASSIFIED IN ACCORD WITH STANDARDS ESTABLISHED BY THE AMERICAN NATIONAL STANDARDS INSTITUTE (ANSI) COMMITTEE N43-3.3

DATE:	1985 DECEMBER 4	CERTIFICATE NO:	61
CAPSULE MODEL:	C-133 TYPE 15 (C-351 INNER CAPSULE)		
ENG. DRWG. NO:	G135160-202	CONTENTS:	COBALT SLUGS
OVERALL DIAMETER:	0.851"	OVERALL LENGTH:	15.809"
CAPSULE MATERIAL:	316L STAINLESS STEEL	ENCAPSULATION:	SINGLE

ANSI CLASSIFICATION AND PERFORMANCE STANDARD (1) — ANSI 77 E53424

CLASSIFIED PERFORMANCE STANDARD (2)			
TEST	CLASS	METHOD	REMARKS
TEMPERATURE	5	TEST	PASS
EXTERNAL PRESSURE	3	TEST	PASS
IMPACT	4	TEST	PASS
VIBRATION	2	TEST	PASS
PUNCTURE	4	TEST	PASS

(1) SEE DEFINITION ON REVERSE SIDE.
(2) SEE TABLE 1, PERFORMANCE STANDARDS ON REVERSE SIDE.
(3) SEE NOTE ON REVERSE SIDE.

COMMENTS:

It is hereby certified that the described sealed source meets the specified standard as prescribed in (3) American National Standard N542-1977 "Sealed Radioactive Sources, Classification" This standard complies with the classification and performance requirements of ISO/DIS 2919.3

Signed A. Hu[illegible]

Title Development Officer

Date 1985 DECEMBER 4

ATOMIC ENERGY OF CANADA LIMITED
COMMERCIAL PRODUCTS, OTTAWA CANADA

MDS Nordion

CERTIFICATE

SEALED SOURCE
CLASSIFICATION DESIGNATION AND PERFORMANCE

Sealed sources are classified in accord with standards established by
THE AMERICAN NATIONAL STANDARDS INSTITUTE (ANSI) and
THE INTERNATIONAL ORGANIZATION FOR STANDARDIZATION (ISO)

CERTIFICATE NO: 106A
DATE: 02-10-16
CAPSULE MODEL: C-146
CONTENTS: Co-60
DRAWING. A03038
CAPSULE MATERIAL: 316L Stainless Steel
OVERALL DIAMETER: Max. 2.34 cm
ENCAPSULATION: Double
OVERALL LENGTH: 36.7 mm

ANSI CLASSIFICATION AND PERFORMANCE STANDARD(1) ANSI 97E64534 ISO/99/E64534

CLASSIFIED PERFORMANCE STANDARD(2)

TEST	CLASS	METHOD	REMARKS
TEMPERATURE	6	TEST	PASS
EXTERNAL PRESSURE	4	TEST	PASS
IMPACT	5	TEST	PASS
VIBRATION	3	TEST	PASS
PUNCTURE	4	TEST	PASS

(1) See definition on reverse side
(2) See Table 1. Performance Standards on reverse side
(3) The certificate was revised to reflect a typographical change in the ANSI CLASSIFICATION AND PERFORMANCE STANDARD(1) reference.

COMMENTS: Capsule Integrity evaluated by Helium leak test (ANSI/HPS N43.6 – 1997, Annex A, paragraph A2.2.6) and Hot Liquid Bubble Test as per ANSI/HPS N43.6 – 1997, Annex A, paragraph A.2.2.2.

It is hereby certified that the described sealed source meets the requirements and classification specified in American National Standard N43.6-1997 "Sealed Radioactive sources, Classification" and in International Standard, ISO 2919-1999(E), "Radiation Protection – Sealed Radioisotope Sources – General Requirements and Classification.

Tested by Hela Sheehan
M. Carver / H. Sheehan
Title Materials Technologist
Date 2002 Oct 16

Approved M Lyane
Title Manager, Package Engineering
Date 2002 OCT 16

MDS Nordion

CERTIFICATE

SEALED SOURCE
CLASSIFICATION DESIGNATION AND PERFORMANCE

Sealed sources are classified in accord with standards established by
THE AMERICAN NATIONAL STANDARDS INSTITUTE (ANSI) and
THE INTERNATIONAL ORGANIZATION FOR STANDARDIZATION (ISO)

CERTIFICATE NO: 88A
DATE: 00-09-25
CAPSULE MODEL: C177
CONTENTS: Cobalt-60 Slugs or Pellets
DRAWING NO: A05195
CAPSULE MATERIAL: 316L Stainless Steel
OVERALL DIAMETER: 0.317"
ENCAPSULATION: Single
OVERALL LENGTH: 8.250"
ANSI CLASSIFICATION AND PERFORMANCE STANDARD(1) ANSI 96:E64434

CLASSIFIED PERFORMANCE STANDARD(2)

TEST	CLASS	METHOD	REMARKS
TEMPERATURE	6	Test	Pass
EXTERNAL PRESSURE	4	Test	Pass
IMPACT	4	Test	Pass
VIBRATION	3	Test	Pass
PUNCTURE	4	Test	Pass

(1) See definition on reverse side
(2) See Table 1. Performance Standards on reverse side

COMMENTS: Capsule integrity assured by Helium leak tests (ANS /HPS N43.6-1997, Annex A, paragraph A2.2.6)
Rev. A the Vibration test was repeated to meet Class 3.

It is hereby certified that the described sealed source meets the requirements and classification specified in American National Standard ANSI/HPS N43.6-1997 "Sealed Radioactive Sources, Classification" and in International Standard, ISO 2919-1999(E). " Radiation Protection – Sealed Radioisotope sources – General Requirements and Classification".

Tested by: H Khodian
Title Materials Technologist
Date 00/11/30

Approved: MLgamel
Title Manager, Package Engineering
Date 00/11/30

SEALED SOURCE
CLASSIFICATION DESIGNATION AND PERFORMANCE CERTIFICATE

SEALED SOURCES ARE CLASSIFIED IN ACCORD WITH STANDARDS ESTABLISHED BY THE AMERICAN NATIONAL STANDARDS INSTITUTE (ANSI) COMMITTEE N43-3

DATE: 18 November, 1976 **CERTIFICATE NO:** 48

CAPSULE MODEL: C-185

ENG. DRWG. NO: A06831 **CONTENTS:** Cobalt Slugs

OVERALL DIAMETER: 0.441 inch **OVERALL LENGTH:** 8.265 inches

CAPSULE MATERIAL: 316L Stainless Steel **ENCAPSULATION:** Double

ANSI CLASSIFICATION AND PERFORMANCE STANDARD[1] E44434

CLASSIFIED PERFORMANCE STANDARD[2]			
TEST	CLASS	METHOD	REMARKS
TEMPERATURE	4	Comparison	See attached work sheet
EXTERNAL PRESSURE	4	Comparison	See attached work sheet
IMPACT	4	Comparison	See attached work sheet
VIBRATION	3	Calculation	See attached work sheet
PUNCTURE	4	Comparison	See attached work sheet

[1] SEE DEFINITION ON REVERSE SIDE.
[2] SEE TABLE 1, PERFORMANCE STANDARDS ON REVERSE SIDE.

COMMENTS:

It is hereby certified that the described sealed source meets the specified standard as prescribed in ANSI Standard "Classification of Sealed Radioactive Sources", August 1967.

ATOMIC ENERGY OF CANADA LIMITED
COMMERCIAL PRODUCTS, OTTAWA CANADA

Signed .....
Title Manager, EQC-PQA
Date 18 November, 1976

MDS Nordion

CERTIFICATE

SEALED SOURCE
CLASSIFICATION DESIGNATION AND PERFORMANCE

Sealed sources are classified in accord with standards established by
THE AMERICAN NATIONAL STANDARDS INSTITUTE (ANSI) and
THE INTERNATIONAL ORGANIZATION FOR STANDARDIZATION (ISO)

CERTIFICATE NO: 95 DATE: 99-12-12

CAPSULE MODEL: C-188 (Bounding Conditions) CONTENTS: Cobalt -60

TEST REFERENCE REPORT: IN/TR1382 C188

CAPSULE MATERIAL: 316L Stainless steel OVERALL DIAMETER: 0.380"

ENCAPSULATION: Double OVERALL LENGTH: 17.777"

ANSI CLASSIFICATION AND PERFORMANCE STANDARD(1) ANSI 96:E64-424

CLASSIFIED PERFORMANCE STANDARD(2)

TEST	CLASS	METHOD	REMARKS
TEMPERATURE	6	Test	Pass
EXTERNAL PRESSURE	4	Test	Pass
IMPACT	4	Test	Pass
VIBRATION	2	Test	Pass
PUNCTURE	4	Test	Pass

(1) See definition on reverse side
(2) See Table 1. Performance Standards on reverse side
(3) American National Standard N43.6-1997 is a revision of ANSI N542-1977

(4) Exceptions: Category II, III Gamma irradiation sources- Temperature class 5.

COMMENTS: Capsule integrity assured by Helium leak tests (ANS /HPS N43.6-1997, paragraphs A2.2.6 to A2.2.6.3.)

It is hereby certified that the described sealed source meets the specified standard as prescribed in (3) American National Standard N43.6-1997 "Sealed Radioactive sources, Classification". This standard complies with the classification and performance requirements of ISO 2919-1999(E), (see Note 4 above for exceptions).

Tested by
Title Materials Specialist
Date 99 12 14

Approved
Title Manager, Package Engineering
Date 99/12/15

FORM 2

Certificate

SEALED SOURCE
CLASSIFICATION DESIGNATION AND PERFORMANCE

SEALED SOURCES ARE CLASSIFIED IN ACCORD WITH STANDARDS ESTABLISHED BY THE AMERICAN NATIONAL STANDARDS INSTITUTE (ANSI) COMMITTEE N43-3.3

CERTIFICATE NO: 63

DATE: 1987 June 8

CAPSULE MODEL: C 191

CONTENTS: Cobalt Slugs

DRWG. NO: A05185

CAPSULE MATERIAL: 316L Stainless Steel

OVERALL DIAMETER: 0.317"

ENCAPSULATION: Single

OVERALL LENGTH: 8.250"

ANSI CLASSIFICATION AND PERFORMANCE STANDARD (1)

ANSI 77 E43424

CLASSIFIED PERFORMANCE STANDARD (2)			
TEST	CLASS	METHOD	REMARKS
TEMPERATURE	4	Test	Pass(See Comments)
EXTERNAL PRESSURE	3	Test	Pass(See Comments)
IMPACT	4	Test	Pass(See Comments)
VIBRATION	2	Test	Pass(See Comments)
PUNCTURE	4	Test	Pass(See Comments)

(1) SEE DEFINITION ON REVERSE SIDE.
(2) SEE TABLE 1, PERFORMANCE STANDARDS ON REVERSE SIDE.
(3) SEE NOTE ON REVERSE SIDE.

COMMENTS: Integrity of Capsule seal evaluated after each test by "Vacuum Liquid Bubble Test".

It is hereby certified that the described sealed source meets the specified standard as prescribed in (3)American National Standard N542-1977 "Sealed Radioactive Sources, Classification" This standard complies with the classification and performance requirements of ISO/DIS 2919.3

Certified J. Culbertson

Title Sr. Metallurgical Tech.

Date 1987 September 30

Authorized G. Malkoske

Title Manager Process Engineering

Date 1987 September 30

Atomic Energy of Canada Limited • Radiochemical Company

Kanata • Ontario

CO-OPS 005

REV 87-8

SEALED SOURCE
CLASSIFICATION DESIGNATION AND PERFORMANCE CERTIFICATE

SEALED SOURCES ARE CLASSIFIED IN ACCORD WITH STANDARDS ESTABLISHED BY THE AMERICAN NATIONAL STANDARDS INSTITUTE (ANSI) COMMITTEE N43-3

DATE: 12 November 1973 CERTIFICATE NO: 32

CAPSULE MODEL: AC-195

ENG. DRWG. NO: A08160-A0 CONTENTS: Cobalt pellets

OVERALL DIAMETER: 0.313 in OVERALL LENGTH: 8.250 in

CAPSULE MATERIAL: Zircaloy ENCAPSULATION: Single

ANSI CLASSIFICATION AND PERFORMANCE STANDARD[1] E43424

CLASSIFIED PERFORMANCE STANDARD[2]			
TEST	CLASS	METHOD	REMARKS
TEMPERATURE	4	Test	
EXTERNAL PRESSURE	3	Test	
IMPACT	4	Test	
VIBRATION	2	By Calculation	See attached sheet
PUNCTURE	4	Test	

[1] SEE DEFINITION ON REVERSE SIDE.
[2] SEE TABLE 1, PERFORMANCE STANDARDS ON REVERSE SIDE.

COMMENTS:

IMPORTANT
All tests referred to on this certificate are in compliance with the first draft revision to ANSI STANDARD "Classification of Sealed Radioactive Sources" August 1973.
Signed .....

It is hereby certified that the described sealed source meets the specified standard as prescribed in ANSI Standard "Classification of Sealed Radioactive Sources", August 1967.

Signed .....
Title Design Engineer
Date 12 November 1973

ATOMIC ENERGY OF CANADA LIMITED
COMMERCIAL PRODUCTS, OTTAWA CANADA

MDS Nordion

CERTIFICATE

SEALED SOURCE
CLASSIFICATION DESIGNATION AND PERFORMANCE

Sealed sources are classified in accord with standards established by
THE AMERICAN NATIONAL STANDARDS INSTITUTE (ANSI) and
THE INTERNATIONAL ORGANIZATION FOR STANDARDIZATION (ISO)

CERTIFICATE NO: 92A
DATE: 00-10-27
CAPSULE MODEL: C198
CONTENTS: Cobalt-60 Slugs
DRAWING NO: G130102-140
CAPSULE MATERIAL: 316L Stainless Steel
OVERALL DIAMETER: 0.383"
ENCAPSULATION: Double
OVERALL LENGTH: 8.265"
CLASSIFICATION DESIGNATION: ANSI 96E64435 ISO /98/E64435(5)

CLASSIFIED PERFORMANCE STANDARD[2]

TEST	CLASS	METHOD	REMARKS
TEMPERATURE	6	Test	Pass
EXTERNAL PRESSURE	4	Test	Pass
IMPACT	4	Test	Pass
VIBRATION	3	Test	Pass
PUNCTURE	5	Test	Pass
BENDING TEST (If applicable)	5	Test	Pass

(1) See definition on reverse side
(2) See Table 1. Performance Standards on reverse side
COMMENTS: Capsule integrity assured by Helium leak tests (ANSI /HPS N43.6-1997, paragraph A2.2.6.)

It is hereby certified that the described sealed source meets the requirements and classification specified in American National Standard ANSI/HPS N43.6-1997 'Sealed Radioactive Sources, Classification' and in International Standard, ISO 2919-1999(E), "Radiation Protection-Sealed Radioisotope Sources- General Requirements and Classification".

Tested by H. Sheehan
Title Materials Technologist
Date 00/12/01

Approved M Gaudet
Title Manager, Package Engineering
Date 00/12/01

SEALED SOURCE
CLASSIFICATION DESIGNATION AND PERFORMANCE CERTIFICATE

SEALED SOURCES ARE CLASSIFIED IN ACCORD WITH STANDARDS ESTABLISHED BY THE AMERICAN NATIONAL STANDARDS INSTITUTE (ANSI) COMMITTEE N43-3.3

DATE: 1985 January 25 **CERTIFICATE NO:** 57

CAPSULE MODEL: TC-239

ENG. DRWG. NO: A08259 **CONTENTS:** Cobalt Pellets

OVERALL DIAMETER: 1.174" **OVERALL LENGTH:** 3.010"

CAPSULE MATERIAL: 316L Stainless Steel **ENCAPSULATION:** Single

ANSI CLASSIFICATION AND PERFORMANCE STANDARD (1) ANSI 77 E53434

CLASSIFIED PERFORMANCE STANDARD (2)			
TEST	CLASS	METHOD	REMARKS
TEMPERATURE	5	TEST	PASS
EXTERNAL PRESSURE	3	TEST	PASS
IMPACT	4	TEST	PASS
VIBRATION	3	CALCULATION	PASS
PUNCTURE	4	TEST	PASS

(1) SEE DEFINITION ON REVERSE SIDE.

(2) SEE TABLE 1, PERFORMANCE STANDARDS ON REVERSE SIDE.

(3) SEE NOTE ON REVERSE SIDE.

COMMENTS: Vacuum Liquid Bubble Test was used to verify capsule integrity after tests.

It is hereby certified that the described sealed source meets the specified standard as prescribed in (3) *American National Standard N542-1977 "Sealed Radioactive Sources, Classification" This standard complies with the classification and performance requirements of ISO/DIS 2919.3*

Signed J. P. Culbertson

Title Metallurgy

Date 1985 January 25

ATOMIC ENERGY OF CANADA LIMITED
COMMERCIAL PRODUCTS, OTTAWA CANADA

SEALED SOURCE
CLASSIFICATION DESIGNATION AND PERFORMANCE CERTIFICATE

SEALED SOURCES ARE CLASSIFIED IN ACCORD WITH STANDARDS ESTABLISHED BY THE AMERICAN NATIONAL STANDARDS INSTITUTE (ANSI) COMMITTEE N43-3

DATE: June 24, 1971 CERTIFICATE NO: 4

CAPSULE MODEL: C-252

ENG. DRWG. NO: A10031A0 CONTENTS: Cobalt Pellets

OVERALL DIAMETER: 0.830 OVERALL LENGTH: 1.5 in

CAPSULE MATERIAL: 316L SS ENCAPSULATION: Double

ANSI CLASSIFICATION AND PERFORMANCE STANDARD[1] E 66535

CLASSIFIED PERFORMANCE STANDARD[2]			
TEST	CLASS	METHOD	REMARKS
TEMPERATURE	6	Comparison	Compared to C-184
EXTERNAL PRESSURE	6	Comparison	Compared to C-184
IMPACT	5	Comparison	Compared to C-184
VIBRATION	3	Comparison	Compared to C-184
PUNCTURE	5	Comparison	Compared to C-184

IMPORTANT
All tests referred to on this certificate are in compliance with the first draft revision to ANSI STANDARD "Classification of Sealed Radioactive Sources" August 1973.
Signed.....

[1] SEE DEFINITION ON REVERSE SIDE.
[2] SEE TABLE 1, PERFORMANCE STANDARDS ON REVERSE SIDE.

COMMENTS: The C-252 is almost identical to the C-184. Minor differences are: (1) the C-252 is tapered instead of barrel shaped, (2) the ends of the C-252 are flat instead of tapered and (3) the C-252 is not chromium plated.

It is hereby certified that the described sealed source meets the specified standard as prescribed in ANSI Standard "Classification of Sealed Radioactive Sources", August 1967.

Signed J. J. McPeller
Title Design Engineer
Date June 24, 1971

ATOMIC ENERGY OF CANADA LIMITED
COMMERCIAL PRODUCTS, OTTAWA CANADA

SEALED SOURCE
CLASSIFICATION DESIGNATION AND PERFORMANCE CERTIFICATE

SEALED SOURCES ARE CLASSIFIED IN ACCORD WITH STANDARDS ESTABLISHED BY THE AMERICAN NATIONAL STANDARDS INSTITUTE (ANSI) COMMITTEE N43-3

DATE: 12 February 1974 **CERTIFICATE NO:** 33

CAPSULE MODEL: C-306 (containing either one C-195, C-191 or C-177)

ENG. DRWG. NO: A14302 **CONTENTS:** Cobalt pellets or slugs

OVERALL DIAMETER: 0.380 in body, 0.437 in end caps **OVERALL LENGTH:** 9.505 in

CAPSULE MATERIAL: 316L SS/Zircaloy-2 **ENCAPSULATION:** Double

ANSI CLASSIFICATION AND PERFORMANCE STANDARD[1] E54434

CLASSIFIED PERFORMANCE STANDARD[2]			
TEST	CLASS	METHOD	REMARKS
TEMPERATURE	5	Comparison	See Comments
EXTERNAL PRESSURE	4	Comparison	See Comments
IMPACT	4	Comparison	See Comments
VIBRATION	3	Comparison	See Comments
PUNCTURE	4	Comparison	See Comments

IMPORTANT
All tests referred to on this certificate are in compliance with the first draft revision to ANSI STANDARD "Classification of Sealed Radioactive Sources" August 1973.
Signed [signature]

[1] SEE DEFINITION ON REVERSE SIDE.
[2] SEE TABLE 1, PERFORMANCE STANDARDS ON REVERSE SIDE.

COMMENTS: See attached sheet

It is hereby certified that the described sealed source meets the specified standard as prescribed in ANSI Standard "Classification of Sealed Radioactive Sources", August 1967.

Signed [signature]
Title Design Engineer
Date 12. February. 1974

ATOMIC ENERGY OF CANADA LIMITED
COMMERCIAL PRODUCTS, OTTAWA CANADA

SEALED SOURCE
CLASSIFICATION DESIGNATION AND PERFORMANCE CERTIFICATE

SEALED SOURCES ARE CLASSIFIED IN ACCORD WITH STANDARDS ESTABLISHED BY THE AMERICAN NATIONAL STANDARDS INSTITUTE (ANSI) COMMITTEE N43-3

DATE: JANUARY 5, 1977 CERTIFICATE NO: 42-A

CAPSULE MODEL: C-325

ENG. DRWG. NO: G1325201/01 CONTENTS: COBALT PELLETS

OVERALL DIAMETER: 0.922 inches OVERALL LENGTH: 1.446 inches

CAPSULE MATERIAL: 316L STAINLESS STEEL ENCAPSULATION: DOUBLE

ANSI CLASSIFICATION AND PERFORMANCE STANDARD[1] E54524

CLASSIFIED PERFORMANCE STANDARD[2]			
TEST	CLASS	METHOD	REMARKS
TEMPERATURE	5	TEST	----------
EXTERNAL PRESSURE	4	TEST	----------
IMPACT	5	TEST	----------
VIBRATION	2	CALCULATION	SEE ATTACHED SHEET
PUNCTURE	4	TEST	----------

[1] SEE DEFINITION ON REVERSE SIDE.
[2] SEE TABLE 1, PERFORMANCE STANDARDS ON REVERSE SIDE.

COMMENTS:

It is hereby certified that the described sealed source meets the specified standard as prescribed in ANSI Standard "Classification of Sealed Radioactive Sources", August 1967.

Signed .....

Title DESIGN ENGINEER

Date JANUARY 5, 1977

ATOMIC ENERGY OF CANADA LIMITED
COMMERCIAL PRODUCTS, OTTAWA CANADA

SEALED SOURCE
CLASSIFICATION DESIGNATION AND PERFORMANCE CERTIFICATE

SEALED SOURCES ARE CLASSIFIED IN ACCORD WITH STANDARDS ESTABLISHED BY THE AMERICAN NATIONAL STANDARDS INSTITUTE (ANSI) COMMITTEE N43-3

DATE: 17 August, 1976 CERTIFICATE NO: 45

CAPSULE MODEL: XC-328

ENG. DRWG. NO: G1328301/01 CONTENTS: Cobalt Pellets

OVERALL DIAMETER: 0.180 inch OVERALL LENGTH: 2.687 inches

CAPSULE MATERIAL: 316 L Stainless Steel ENCAPSULATION: Single

ANSI CLASSIFICATION AND PERFORMANCE STANDARD[1] C56435

CLASSIFIED PERFORMANCE STANDARD[2]			
TEST	CLASS	METHOD	REMARKS
TEMPERATURE	5	Comparison	Compared with C-133, Type 9 and with C-188. See attached sheet.
EXTERNAL PRESSURE	6	Comparison	Compared with C-133, Type 5. See attached sheet.
IMPACT	4	Comparison	Compared with C-133, Type 5. See attached sheet.
VIBRATION	3	Calculation	See attached sheet.
PUNCTURE	5	Comparison	Compared with C-188. See attached sheet.

[1] SEE DEFINITION ON REVERSE SIDE.
[2] SEE TABLE 1, PERFORMANCE STANDARDS ON REVERSE SIDE.

COMMENTS:

It is hereby certified that the described sealed source meets the specified standard as prescribed in ANSI Standard "Classification of Sealed Radioactive Sources", August 1967.

ATOMIC ENERGY OF CANADA LIMITED
COMMERCIAL PRODUCTS, OTTAWA CANADA

Signed .....
Title PQA Engineer
Date 17 August, 1976

MDS Nordion

CERTIFICATE

SEALED SOURCE
CLASSIFICATION DESIGNATION AND PERFORMANCE

Sealed sources are classified in accord with standards established by
THE AMERICAN NATIONAL STANDARDS INSTITUTE (ANSI) and
THE INTERNATIONAL ORGANIZATION FOR STANDARDIZATION (ISO)

CERTIFICATE NO: 91 DATE: May 25, 1999

CAPSULE MODEL: C339 CONTENTS: Cobalt Slugs or Pellets

DRAWING. NO: Q100303-022

CAPSULE MATERIAL: Zircaloy-2 OVERALL DIAMETER: 0.315"

ENCAPSULATION: Single OVERALL LENGTH: 8.250"

ANSI CLASSIFICATION AND PERFORMANCE STANDARD(1) ANSI 77: E64434

CLASSIFIED PERFORMANCE STANDARD(2)

TEST	CLASS	METHOD	REMARKS
TEMPERATURE	6	TEST	PASS
EXTERNAL PRESSURE	4	TEST	PASS
IMPACT	4	TEST	PASS
VIBRATION	3	TEST	PASS
PUNCTURE	4	TEST	PASS

(1) See definition on reverse side
(2) See Table 1. Performance Standards on reverse side
(3) American National Standard N542-1977 is a revision of ANSI N5.10-1968

COMMENTS: Capsule integrity assured by Helium leak test (ANS N542, handbook 126, paragraphs A2.2.6 to A2.2.6.3).

It is hereby certified that the described sealed source meets the specified standard as prescribed in (3) American National Standard N542-1977 "Sealed Radioactive sources, Classification". This standard complies with the classification and performance requirements of ISO 2919-1980(E).

Tested by J. Culbertson Approved M. Lynch

Title Materials Specialist Title Manager, Package Engineering

Date 99-05-26 Date 99/07/05

SEALED SOURCE
CLASSIFICATION DESIGNATION AND PERFORMANCE CERTIFICATE

SEALED SOURCES ARE CLASSIFIED IN ACCORD WITH STANDARDS ESTABLISHED BY THE AMERICAN NATIONAL STANDARDS INSTITUTE (ANSI) COMMITTEE N43-3.3

DATE:	1985 DECEMBER 5	CERTIFICATE NO:	60
CAPSULE MODEL:	C-350		
ENG. DRWG. NO:	G135060-201	CONTENTS:	AL SHEATHED COBALT SLUGS
OVERALL DIAMETER:	1.304"	OVERALL LENGTH:	17.777"
CAPSULE MATERIAL:	316L STAINLESS STEEL	ENCAPSULATION:	DOUBLE

ANSI CLASSIFICATION AND PERFORMANCE STANDARD [1]

ANSI 77	E53424

CLASSIFIED PERFORMANCE STANDARD [2]			
TEST	CLASS	METHOD	REMARKS
TEMPERATURE	5	TEST	PASS
EXTERNAL PRESSURE	3	TEST	PASS
IMPACT	4	TEST	PASS
VIBRATION	2	TEST	PASS
PUNCTURE	4	TEST	PASS

(1) SEE DEFINITION ON REVERSE SIDE.

(2) SEE TABLE 1, PERFORMANCE STANDARDS ON REVERSE SIDE.

(3) SEE NOTE ON REVERSE SIDE.

COMMENTS:

It is hereby certified that the described sealed source meets the specified standard as prescribed in [3] American National Standard N542-1977 "Sealed Radioactive Sources, Classification" This standard complies with the classification and performance requirements of ISO/DIS 2919.3

Signed A. Hurd

Title Development Officer

Date 1985 DECEMBER 4

ATOMIC ENERGY OF CANADA LIMITED
COMMERCIAL PRODUCTS, OTTAWA CANADA

SEALED SOURCE
CLASSIFICATION DESIGNATION AND PERFORMANCE CERTIFICATE

SEALED SOURCES ARE CLASSIFIED IN ACCORD WITH STANDARDS ESTABLISHED BY THE AMERICAN NATIONAL STANDARDS INSTITUTE (ANSI) COMMITTEE N43-3.3

DATE:	1985 DECEMBER 4	CERTIFICATE NO:	62
CAPSULE MODEL:	C-351		
ENG. DRWG. NO:	G135160-201	CONTENTS:	COBALT SLUGS
OVERALL DIAMETER:	0.921"	OVERALL LENGTH:	17.777"
CAPSULE MATERIAL:	316L STAINLESS STEEL	ENCAPSULATION:	DOUBLE

ANSI CLASSIFICATION AND PERFORMANCE STANDARD (1) — ANSI 77 E53424

CLASSIFIED PERFORMANCE STANDARD (2)			
TEST	CLASS	METHOD	REMARKS
TEMPERATURE	5	TEST	PASS
EXTERNAL PRESSURE	3	TEST	PASS
IMPACT	4	TEST	PASS
VIBRATION	2	TEST	PASS
PUNCTURE	4	TEST	PASS

(1) SEE DEFINITION ON REVERSE SIDE.
(2) SEE TABLE 1, PERFORMANCE STANDARDS ON REVERSE SIDE.
(3) SEE NOTE ON REVERSE SIDE.

COMMENTS: Additional bend test results attached.

It is hereby certified that the described sealed source meets the specified standard as prescribed in (3) American National Standard N542-1977 "Sealed Radioactive Sources, Classification" This standard complies with the classification and performance requirements of ISO/DIS 2919.3

Signed .....

Title .....Development Officer.....

Date .....1985 DECEMBER 4.....

ATOMIC ENERGY OF CANADA LIMITED
COMMERCIAL PRODUCTS, OTTAWA CANADA

MDS Nordion

CERTIFICATE

SEALED SOURCE
CLASSIFICATION DESIGNATION AND PERFORMANCE

Sealed sources are classified in accord with standards established by
THE AMERICAN NATIONAL STANDARDS INSTITUTE (ANSI) and
THE INTERNATIONAL ORGANIZATION FOR STANDARDIZATION (ISO)

CERTIFICATE NO: 97

DATE: 01-02-22

CAPSULE MODEL: C-442

CONTENTS: Cobalt -60 Slugs/Pellets/Wafers

DRAWING NO: G144202-001

CAPSULE MATERIAL: 316L Stainless Steel

OVERALL TUBE DIAMETER = 0.515"

ENCAPSULATION: Double

OVERALL LENGTH: 17.77"

CLASSIFICATION DESIGNATION ANSI: 96: E64435 *ISO/ 98 /E64435(5)*

CLASSIFIED PERFORMANCE STANDARD(2)

TEST	CLASS	METHOD	REMARKS
TEMPERATURE	6	TEST	PASS
EXTERNAL PRESSURE	4	TEST	PASS
IMPACT	4	TEST	PASS
VIBRATION	3	TEST	PASS
PUNCTURE	5	TEST	PASS
BENDING TEST	5	TEST	PASS

(1) See definition on reverse side
(2) See Table 1. Performance Standards on reverse side

COMMENTS: Capsule integrity assured by Helium leak tests (ANS /HPS N43.6-1997, Annex A paragraphs A2.2.6)

It is hereby certified that the described sealed source meets the requirements and classification specified in American National Standard ANSI/HPS N43.6-1997 "Sealed Radioactive Sources, Classification" and in International Standard, ISO 2919-1999(E), " Radiation Protection – Sealed Radioisotope sources – General Requirements and Classification".

Tested by Helen Sheehan
Title Materials Technologist
Date 26 Feb 2001

Approved M Lyane
Title Manager, Package Engineering
Date 26 FEB 2001

CERTIFICATE

SEALED SOURCE
CLASSIFICATION DESIGNATION AND PERFORMANCE

Sealed sources are classified in accord with standards established by
THE AMERICAN NATIONAL STANDARDS INSTITUTE (ANSI) and
THE INTERNATIONAL ORGANIZATION FOR STANDARDIZATION (ISO)

CERTIFICATE NO: 70 **DATE:** April 10, 1991

CAPSULE MODEL: C1000 **CONTENTS:** Cs Cl pressed pellets

DRWG. NO: G120201-102

CAPSULE MATERIAL: 316L Stainless Steel **OVERALL DIAMETER:** 0.5"

ENCAPSULATION: Double **OVERALL LENGTH:** 10.690"

ANSI CLASSIFICATION AND PERFORMANCE STANDARD (1) ANSI 77 E65546

CLASSIFIED PERFORMANCE STANDARD (2)

TEST	CLASS	METHOD	REMARKS
TEMPERATURE	6	Test	Pass
EXTERNAL PRESSURE	5	Test	Pass
IMPACT	5	Test	Pass
VIBRATION	4	Test	Pass
PUNCTURE	6	Test	Pass

(1) See definition on reverse side
(2) See Table 1. Performance Standards on reverse side
(3) American National Standard N542-1977 is a revision of ANSI N5.10-1968

COMMENTS:

All capsules were integrity tested (Helium leak test) following each individual performance test. No leakage occurred in any capsule.

The capsule has also passed Class 6 of the ANSI N433.1-1977 Special Bend test for Category 1 dry storage gamma irradiators.

It is hereby certified that the described sealed source meets the specified standard as prescribed in (3) American National Standard N542-1977 "Sealed Radioactive Sources, Classification". This standard complies with the classification and performance requirements of ISO 2919-1980(E).

Tested by J. Culbertson *Authorized* G.A. Burbidge

Title Sr. Met. Technician *Title* Manager, Package Eng.

Date 91/04/26 *Date* 91/04/10

NORDION INTERNATIONAL INC.

SEALED SOURCE
SPECIAL FORM TEST CERTIFICATE

Sealed sources are tested in accord with the International Atomic Energy Agency (I.A.E.A.) regulations for the safe transport of radioactive materials, 1973 revised edition, safety series No 6, Section VII, paragraphs 708, 726-737.

DATE: AUGUST 28, 1975

CERTIFICATE NO: 2

CAPSULE MODEL: C-146 (2 cm)

CONTENTS: COBALT

ENG. DRWG NO: A03038/B1

FORM: PELLETS

OVERALL DIAMETER: 0.992

OVERALL LENGTH: 1.446

CAPSULE MATERIAL: 316L STAINLESS STEEL

ENCAPSULATION: DOUBLE

SPECIAL FORM REQUIREMENTS (1)				
TEST	PASS	FAIL	METHOD	REMARKS
IMPACT (708) (732)	X	-	TEST	---
PERCUSSION (733)	X	-	TEST	---
BENDING (734)	-	-	----	NOT APPLICABLE
HEAT (735)	X	-	TEST	---
LEACHING (736-737)	-	-	----	SEE COMMENTS

(1) SEE SPECIAL FORM REQUIREMENTS ON NEXT PAGE.

COMMENTS: Vacuum Leak Bubble Test (as per ANSI Standard for Sealed Sources) was used to evaluate the integrity of capsules after each test.

It is hereby certified that the described sealed source meets the requirements of special form in accord with the I.A.E.A. regulations for the safe transport of radioactive materials, 1973 revised edition, safety series No. 6, Section VII, paragraphs 708, 726-737.

ATOMIC ENERGY OF CANADA LIMITED
COMMERCIAL PRODUCTS, OTTAWA CANADA

SIGNED: [signature]

TITLE: DESIGN ENGINEER

DATE: AUGUST 28, 1975

DEVELOPMENT DIV-5-75

447 March Road
Kanata, Ontario
Canada K2K 1X8
Tel: 613 592-2790

MDS Nordion
Science Advancing Health

SPECIAL FORM RADIOACTIVE MATERIAL
TEST SUMMARY

The capsule model specified herein has been evaluated in accord with the International Atomic Energy Agency (I.A.E.A.) Safety Series No 6, Regulations for the Safe Transport of Radioactive Material, 1985 Edition, (as amended 1990) Section VI, paragraphs 604-613 and 618.

TEST SUMMARY: 35 DATE: Feb. 21, 1997
CAPSULE MODEL: C177 CONTENTS: Cobalt Slugs or Pellets

DRAWING. NO: A05195
CAPSULE MATERIAL: 316L Stainless Steel OVERALL DIAMETER: 0.317"
ENCAPSULATION: Single OVERALL LENGTH: 8.250"

SPECIAL FORM REQUIREMENTS(1)

TEST	PASS	FAIL	METHOD	REMARKS
IMPACT (607)(618)	X		Comparison	See comment 3
PERCUSSION (608)	X		Comparison	See comment 3
BENDING (609)	X		Test	See comment 1
HEAT (610)	X		Comparison	See comment 2
LEACHING (612)(613)	--		--	See comment 1

(1) See Special Form requirements on reverse side
COMMENTS: 1) Capsule integrity following bend test was verified by helium leak testing.
2) Paragraph 611(b), Safety series no. 6 specifies that the heat test has been validated by the passage of Class 6 Temperature test, ISO 2919-1980E as referenced in ANSI Cert # 88.
3) Paragraph 611(a). Safety series no. 6 specifies that the Impact and Percussion performance tests have been validated by the passage of Class 4 Impact test, ISO 2909-1980(E) as referenced in ANSI Cert # 88.

This summary verifies that the described capsule model meets the requirements of Special Form in accord with the I.A.E.A. Safety Series No. 6, Regulations for the Safe Transport of Radioactive Material, 1985 Edition, (as amended 1990) Section VI, paragraphs 604-613 and 618.

Tested by J Culbertson
Title Materials Specialist
Date 97-02-21

Authorized M. Krzaniak
Title Manager, Package and Facility Engineering
Date 97-02-21

MDS Nordion

SPECIAL FORM RADIOACTIVE MATERIAL TEST SUMMARY

The capsule model specified herein has been evaluated in accord with the International Atomic Energy Agency (I.A.E.A.) Safety Series No. 6, Regulations for the Safe Transport of Radioactive Material, 1985 Edition, (as amended 1990) Section VI, paragraphs 604-613 and 618.

TEST SUMMARY: 41 DATE: 99-12-12

CAPSULE MODEL: C-188 (Bounding Conditions) CONTENTS: Cobalt-60

TEST REFERENCE REPORT: IN/TR 1596 C188

CAPSULE MATERIAL: 316L Stainless Steel OVERALL DIAMETER: 0.380"

ENCAPSULATION: Double OVERALL LENGTH: 17.777"

SPECIAL FORM REQUIREMENTS(1)

TEST	PASS	FAIL	METHOD	REMARKS
IMPACT (607)(618)	X		Comparison	See Comments 3, 4, 5
PERCUSSION (608)	X		Comparison	See Comments 3, 4, 5
BENDING (609)	X		Test	Pass
HEAT (610)	X		Comparison	See Comments 2, 4, 5
LEACHING (612)(613)	---		---	See Comment 1

(1) See Special Form requirements on reverse side

COMMENTS: 1) Capsule Integrity following bend test was verified by helium leak testing.

2) Paragraph 611(b), Safety series no. 6 specifies that the requirements of the Heat Test can be satisfied with the completion of a Class 6 Temperature Test per ISO 2919-1980 (E).

3) Paragraph 611(a), Safety series no. 6 specifies that the Impact and Percussion performance tests can be satisfied with the completion of a Class 4 Impact test per ISO 2919-1980 (E).

4) ISO 2919-1980 (E) Heat and Impact Tests are identical to ANS N43.6-1997.

5) The test reports for the Class 6 Temperature Test and the Class 4 Impact Tests are attached to ANSI certificate #95.

This summary verifies that the described capsule model meets the requirements of Special Form in accordance with the I.A.E.A. Safety Series No. 6, Regulations for the Safe Transport of Radioactive Material, 1985 Edition, (as amended 1990) Section VI, paragraphs 604-613 and 618.

Tested by J. Ciberton
Title Materials Specialist
Date 99-12-15

Approved M. Yanciel
Title Manager, Package and Facility Engineering
Date 99/12/16

FORM 1

Certificate
for
SPECIAL FORM RADIOACTIVE MATERIAL

The capsule model specified herein has been evaluated in accord with the International Atomic Energy Agency (I.A.E.A.) Safety Series No. 6, Regulations for the Safe Transport of Radioactive Materials, 1973 Revised Edition (As Amended) Section VII, paragraphs 701, 708, 726-737.(1)

CERTIFICATE NO: 13 **DATE:** 1987 June 8

CAPSULE MODEL: C-191 **CONTENTS:** Cobalt

DRWG NO: A05185 **FORM:** Slugs

CAPSULE MATERIAL: 316L Stainless Steel **OVERALL DIAMETER:** 0.317"

ENCAPSULATION: Single **OVERALL LENGTH:** 8.250"

SPECIAL FORM REQUIREMENTS (1)				
TEST	PASS	FAIL	METHOD	REMARKS
IMPACT (708) (732)	x		TEST	SEE COMMENTS
PERCUSSION (733)	x		TEST	SEE COMMENTS
BENDING (734)	x		TEST	SEE COMMENTS
HEAT (735)	x		TEST	SEE COMMENTS
LEACHING (736-737)				SEE COMMENTS

(1) SEE SPECIAL FORM REQUIREMENTS ON REVERSE SIDE

COMMENTS: Integrity of capsules seal evaluated after each test by "Vacuum Liquid Bubble Test"

It is hereby certified that the described capsule model meets the requirements of special form in accord with the I.A.E.A. Safety Series No. 6, Regulations for the Safe Transport of Radioactive Materials, 1973 Revised Edition (As Amended) Section VII, paragraphs 708, 726-737.

Tested By J. Culbertson *Authorized* G. Malkoske

Title Sr. Metallurgical Technician *Title* Manager, Process Engineering

Date 1987 September 30 *Date* 1987 September 30

Atomic Energy of Canada Limited • Radiochemical Company

Kanata • Ontario

CO-OPS 006 REV 87-8

SPECIAL FORM RADIOACTIVE MATERIAL TEST SUMMARY

The capsule model specified herein has been evaluated in accord with the International Atomic Energy Agency (I.A.E.A.) Safety Series No. 6, Regulations for the Safe Transport of Radioactive Materials, 1985 Edition, Section VI, paragraphs 604-613 and 618.

TEST SUMMARY NO:	26	**DATE:**	Aug. 4/92
CAPSULE MODEL:	C198	**CONTENTS:**	Cobalt Slugs
DRWG NO:	A03079		
CAPSULE MATERIAL:	316L Stainless Steel	**OVERALL DIAMETER:**	0.380"
ENCAPSULATION:	Double	**OVERALL LENGTH:**	8.265"

SPECIAL FORM REQUIREMENTS (1)

TEST	PASS	FAIL	METHOD	REMARKS
IMPACT (607)(618)	X		Test	See Comments
PERCUSSION (608)	X		Test	See Comments
BENDING (609)	X		Test	See Comments
HEAT (610)	X		Test	See Comments
LEACHING (612)(613)	-		-	See Comments

(1) See special form requirements on reverse side

COMMENTS:

Capsule integrity was verified after each test by Helium leak testing.

This summary verifies that the described capsule model meets the requirements of Special Form in accord with the I.A.E.A. Safety Series No. 6, Regulations for the Safe Transport of Radioactive Materials, 1985 Edition, Section VI, paragraphs 604-613 and 618.

Tested by	J. Culbertson	*Authorized*	G.A. Burbidge
Title	Sr. Met. Technician	*Title*	Manager, Package Eng.
Date	Aug. 4/92	*Date*	Aug 4/92

NORDION INTERNATIONAL INC.

SEALED SOURCE
SPECIAL FORM TEST CERTIFICATE

Sealed sources are tested in accord with the International Atomic Energy Agency (I.A.E.A.) regulations for the safe transport of radioactive materials, 1973 revised edition, safety series No 6, Section VII, paragraphs 708, 726-737.

DATE: JULY 16, 1975

CERTIFICATE NO: 1

CAPSULE MODEL: C-325

CONTENTS: Cobalt

ENG. DRWG NO: G1325201/01

FORM: Pellets

OVERALL DIAMETER: 0.922 inch

OVERALL LENGTH: 1.446 inch

CAPSULE MATERIAL: 316L Stainless Steel

ENCAPSULATION: Double

SPECIAL FORM REQUIREMENTS (1)				
TEST	PASS	FAIL	METHOD	REMARKS
IMPACT (708) (732)	X		TEST	
PERCUSSION (733)	X		TEST	
BENDING (734)	-		----	NOT APPLICABLE
HEAT (735)	X		TEST	
LEACHING (736-737)	-		----	SEE COMMENTS

(1) SEE SPECIAL FORM REQUIREMENTS ON NEXT PAGE.

COMMENTS: Vacuum leak bubble test was used to evaluate the integrity of capsules after each test.

It is hereby certified that the described sealed source meets the requirements of special form in accord with the I.A.E.A. regulations for the safe transport of radioactive materials, 1973 revised edition, safety series No. 6, Section VII, paragraphs 708, 726-737.

ATOMIC ENERGY OF CANADA LIMITED
COMMERCIAL PRODUCTS, OTTAWA CANADA

SIGNED: [signature]
TITLE: SEALED SOURCE ENGINEER
DATE: JULY 16, 1975

DEVELOPMENT DIV-5-75

447 March Road
Kanata, Ontario
Canada K2K 1X8
Tel: 613 592-2790

MDS Nordion
Science Advancing Health

SPECIAL FORM RADIOACTIVE MATERIAL TEST SUMMARY

The capsule model specified herein has been evaluated in accord with the International Atomic Energy Agency (I.A.E.A.) Safety Series No. 6, Regulations for the Safe Transport of Radioactive Material, 1985 Edition, (as amended 1990) Section VI, paragraphs 604-613 and 618.

TEST SUMMARY: 38
DATE: May 25, 1999
CAPSULE MODEL: C339
CONTENTS: Cobalt Slugs and Pellets
DRAWING. NO: Q100303-022
CAPSULE MATERIAL: Zircaloy-2
OVERALL DIAMETER: 0.315"
ENCAPSULATION: Single
OVERALL LENGTH: 8.250"

SPECIAL FORM REQUIREMENTS(1)

TEST	PASS	FAIL	METHOD	REMARKS
IMPACT (607)(618)	X		Comparison	See Comment 3
PERCUSSION (608)	X		Comparison	See Comment 3
BENDING (609)	X		TEST	
HEAT (610)	X		Comparison	See Comment 2
LEACHING (612)(613)	–		—	See Comment 1

(1) See Special Form requirements on reverse side

COMMENTS: 1) Capsule integrity following bend test was verified by helium leak testing.

2) Paragraph 611(b), Safety series no. 6 specifies that the heat test has been validated by the passage of Class 6 Temperature test, ISO 2919-1980E as referenced in ANSI Cert # 91.

3) Paragraph 611(a), Safety series no. 6 specifies that the Impact and Percussion performance tests have been validated by the passage of Class 4 Impact test, ISO 2909-1980(E) as referenced in ANSI Cert # 91.

This summary verifies that the described capsule model meets the requirements of Special Form in accord with the I.A.E.A. Safety Series No. 6, Regulations for the Safe Transport of Radioactive Material, 1985 Edition, (as amended 1990) Section VI, paragraphs 604-613 and 618.

Tested by J Culbertson J Culbertson
Title Materials Specialist
Date 99-05-26

Authorized M. Krzaniak M Krzaniak
Title Manager, Package Engineering
Date 99/07/05

SPECIAL FORM RADIOACTIVE MATERIAL TEST SUMMARY

The capsule model specified herein has been evaluated in accord with the International Atomic Energy Agency (I.A.E.A.) Safety Series No. 6, Regulations for the Safe Transport of Radioactive Materials, 1985 Edition, Section VI, paragraphs 604-613 and 618.

TEST SUMMARY NO:	19	**DATE:**	1990 March 19
CAPSULE MODEL:	TC 346 *(Special)	**CONTENTS:**	Iridium Pellets
DRWG NO:	A17724 Iss. B		
CAPSULE MATERIAL:	Type 410 Stainless Steel	**OVERALL DIAMETER:**	0.5 inches
ENCAPSULATION:	Single	**OVERALL LENGTH:**	2.0 inches

SPECIAL FORM REQUIREMENTS (1)

TEST	PASS	FAIL	METHOD	REMARKS
IMPACT (607)(618)	X		TEST	See Comments
PERCUSSION (608)	X		TEST	See Comments
BENDING (609)	--	--	---	Not Applicable
HEAT (610)	X		TEST	See Comments
LEACHING (612)(613)				See Comments

(1) See special form requirements on reverse side

COMMENTS:

Integrity of capsule seal evaluated after each test by "Vacuum Liquid Bubble Test".

*Special: Capsule made to TC 346 Drawing number A17724, Issue B, except: Thickness at unwelded end is 0.020" rather than 0.120".

This summary verifies that the described capsule model meets the requirements of Special Form in accord with the I.A.E.A. Safety Series No. 6, Regulations for the Safe Transport of Radioactive Materials, 1985 Edition, Section VI, paragraphs 604-613 and 618.

Tested by		*Authorized*	
Title	Sr. Met. Technician	*Title*	Manager, Package Engineering
Date	March 19, 1990	*Date*	March 19, 1990

NORDION INTERNATIONAL INC.

MDS Nordion

SPECIAL FORM RADIOACTIVE MATERIAL TEST SUMMARY

The capsule model specified herein has been evaluated in accord with the International Atomic Energy Agency (I.A.E.A.) Safety Series No. 6, Regulations for the Safe Transport of Radioactive Material, 1985 Edition, (as amended 1990) Section VI, paragraphs 604-613 and 618.

TEST SUMMARY: 43

DATE: 01-02-22

CAPSULE MODEL: C-442

CONTENTS: Cobalt-60 Slugs/Pellets/Wafers

TEST REFERENCE REPORT: IN/TR 1728 C442

CAPSULE MATERIAL: 316L Stainless Steel

OVERALL TUBE DIAMETER: 0.515"

ENCAPSULATION: Double

OVERALL LENGTH: 17.77"

SPECIAL FORM REQUIREMENTS(1)

TEST	PASS	FAIL	METHOD	REMARKS
IMPACT (607)(618)	X		Comparison	See Comment 3
PERCUSSION (608)	X		Comparison	See Comment 3
BENDING (609)	X		Test	Pass
HEAT (610)	X		Comparison	See Comment 2
LEACHING (612)(613)	---		---	See Comment 1

(1) See Special Form requirements on reverse side

COMMENTS: 1) Capsule integrity following bend test was verified by helium leak testing.

2) Paragraph 611(b), Safety series no. 6 specifies that the heat test requirements have been satisfied by the completion of the Class 6 Temperature test, ANS N43.6-1997 as referenced in ANSI certificate # 97.

3) Paragraph 611(b), Safety series no. 6 specifies that impact and percussion requirements have been satisfied by the completion of the Class 4 Impact test, ANS N43.6-1997 as referenced in ANSI certificate # 97.

This summary verifies that the described capsule model meets the requirements of Special Form in accordance with the I.A.E.A. Safety Series No. 6, Regulations for the Safe Transport of Radioactive Material, 1985 Edition, (as amended 1990) Section VI, paragraphs 604-613 and 618.

Tested by Helen Sheehan

Title Materials Technologist

Date 26 Feb 2001

Approved M Lyons

Title Manager, Package Engineering

Date 01 FEB 26

SPECIAL FORM RADIOACTIVE MATERIAL TEST SUMMARY

The capsule model specified herein has been evaluated in accord with the International Atomic Energy Agency (I.A.E.A.) Safety Series No. 6, Regulations for the Safe Transport of Radioactive Materials, 1985 Edition, Section VI, paragraphs 604-613 and 618.

TEST SUMMARY NO:	21	**DATE:**	Apr. 10, 1991
CAPSULE MODEL:	C1000	**CONTENTS:**	Cs Cl pressed pellets
DRWG NO:	G120201-102		
CAPSULE MATERIAL:	316L Stainless Steel	**OVERALL DIAMETER:**	0.5"
ENCAPSULATION:	Double	**OVERALL LENGTH:**	10.690"

SPECIAL FORM REQUIREMENTS (1)

TEST	PASS	FAIL	METHOD	REMARKS
IMPACT (607)(618)	X		Test	See comments
PERCUSSION (608)	X		Test	" "
BENDING (609)	X		Test	" "
HEAT (610)	X		Test	" "
LEACHING (612)(613)	--	--	----	" "

(1) See special form requirements on reverse side

COMMENTS: All capsules were integrity tested (Helium leak test) following each individual performance test. No leakage occurred in any capsule.

This summary verifies that the described capsule model meets the requirements of Special Form in accord with the I.A.E.A. Safety Series No. 6, Regulations for the Safe Transport of Radioactive Materials, 1985 Edition, Section VI, paragraphs 604-613 and 618.

Tested by	J. Culbertson	*Authorized*	G.A. Buxbidge
Title	Sr. Met. Technician	*Title*	Manager, Package Eng.
Date	91/04/26	*Date*	91/04/10

NORDION INTERNATIONAL INC.

APPENDIX 13:
Miscellaneous Topics

Table of Contents for Appendix 13

13.1 Stress Calculations for C-188 Sealed Source

13.2 Stress Calculations for C-146/C-151 Sealed Source

13.3 Maximum Normal Operating Pressure of Sealed Sources

13.4 – 13.5 No longer required

13.6 Compression Test –Paragraph 623

13.7 Penetration Test–Paragraph 624

13.8 Water Immersion Test–Paragraph 629

13.9 Reference Material

APPENDIX 13.1
STRESS CALCULATIONS FOR C-188 SEALED SOURCE

1. Maximum Source Temperature and Material Data

   To evaluate the integrity of the C-188 sealed source under pressure, we must consider the response of the source to normal and accident conditions of transport. To be conservative, the temperature of the sealed source is assumed to be that of the regulatory fire, 1472°F, for these stress calculations.

   The C-188 material is 316L stainless steel, with a yield, YS, of

   YS (yield stress) = 11,000 psi at 1472°F [see Appendix 13.9].

2. Hoop Stress at Regions away from the End Cap

   $\sigma = P_1 d/(2t)$

   where P_1 = internal pressure
   d = tube diameter = 0.38 in.
   t = tube thickness = 0.025 in.

   At yield stress,

   $P_1 = \sigma*2*t/d = 11{,}000*2*0.025/0.38 = 1{,}447$ psi

3. Stress in the End Cap

   $\sigma = 1.293*P_2*(d/2)/(2*t)$ [Ref. ASME Handbook Metals Engineering Design, 2nd Edition]

   where t = cap thickness = 0.447 in.
   d = tube inside diameter = 0.338 in.

   At yield stress,

   $P_2 = \sigma(2*t)/(1.293*d/2) = 11{,}000*(2*0.447)/(1.293*0.338/2) = 45{,}003$ psi

4. Stress in the Weld Joint (Body-End Cap)

   $\sigma = F/A_w$

where F = force due to pressure rise
$= P_3 * A$, where A is the tube inside area
$= P_3 * \pi * (0.338)^2/4 = 0.09P_3$
A_w = effective weld area = π*(0.338)*min. throat*weld joint efficiency
$= \pi*(0.338)*0.019*0.7*0.8 = 0.011$ in2

At yield stress,

$11{,}000 = 0.09P_3/0.011$, and

$P_3 = 11{,}000*0.011/0.09 = 1{,}344$ psi

5. Temperature at Minimum Yield Pressure

The temperature differential required to achieve the minimum pressure at which the capsule will yield is calculated as follows.

At the minimum pressure yield will occur in the capsule, 1344 psi (lowest of pressures calculated in sections 4, 5 and 6), the pressure differential will be 1344+14.7 (atmospheric) = 1359 psi.

If the source is conservatively considered to be at room temperature, 70°F at atmospheric, the temperature of the capsule at the minimum yield pressure, T2, is calculated from the ideal gas law assuming a constant volume,

P2 * T1 = P1 * T2, and

T2 = P2 * T1/ P1 = 1359 * (70 + 460) / 14.7 = 48,998°R = 48,538°F

The temperature differential required to achieve the minimum yield pressure is much higher than the capsule will see, even under worst-case accident fire conditions.

6. Conclusion

Since the pressure required for yield cannot be attained even at the regulatory fire temperature of 1472°F, the capsule is capable of withstanding the normal and accident conditions of transport as required by the regulations.

APPENDIX 13.2
STRESS CALCULATIONS FOR C-146/C-151 SEALED SOURCE

1. Maximum Source Temperature and Material Data

   To evaluate the integrity of the C-146/C-151 sealed source under pressure, we must consider the response of the source to normal and accident conditions of transport. To be conservative, the temperature of the sealed source is assumed to be that of the regulatory fire, 1472°F, for these stress calculations.

   The C-146/C-151 material is 316L stainless steel, with a yield, YS, of

   YS (yield stress) = 11,000 psi at 1472°F [see Appendix 13.9].

2. Hoop Stress at Regions away from the End Cap

   $\sigma = P_1 d/(2t)$

   where P_1 = internal pressure
   d = tube diameter = 1.295 in.
   t = tube thickness = 0.025 in.

   At yield stress,

   $P_1 = \sigma*2*t/d = 11{,}000*2*0.025/1.295 = 424$ psi

3. Stress in the End Cap

   $\sigma = 1.293*P_2*(d/2)/(2*t)$ [Ref. ASME Handbook Metals Engineering Design, 2nd Edition]

   where t = cap thickness = 0.025 in.
   d = tube inside diameter = 1.245 in.

   At yield stress,

   $P_2 = \sigma(2*t)/(1.293*d/2) = 11{,}000*(2*0.025)/(1.293*1.245/2) = 683$ psi

4. Stress in the Weld Joint (Body-End Cap)

   $\sigma = F/A_w$

where F = force due to pressure rise
$= P_3 * A$, where A is the tube inside area
$= P_3 * \pi * (1.245)^2/4 = 1.22P_3$
A_w = effective weld area = π*d*weld penetration*weld joint efficiency
$= \pi * (1.245) * 0.025 * 0.7 = 0.068\ in^2$

At yield stress,

$11{,}000 = 1.22P_3/0.068$, and

$P_3 = 11{,}000 * 0.068/1.22 = 613$ psi

5. Temperature at Minimum Yield Pressure

The temperature differential required to achieve the minimum pressure at which the capsule will yield is calculated as follows.

At the minimum pressure yield will occur in the capsule, 424 psi (lowest of pressures calculated in sections 4, 5 and 6), the pressure differential will be 424+14.7 (atmospheric) = 439 psi.

If the source is conservatively considered to be at room temperature, 70°F at atmospheric, the temperature of the capsule at the minimum yield pressure, T2, would be calculated from,

$P2 * T1 = P1 * T2$

$T2 = P2 * T1 / P1 = 439 * (70 + 460) / 14.7 = 15{,}828°R = 15{,}368°F$

The temperature differential required to achieve the minimum yield pressure is much higher than the capsule will see, even under worst-case accident fire conditions.

7. Conclusion

Since the pressure required for yield cannot be attained even at the regulatory fire temperature of 1472°F, the capsule is capable of withstanding the normal and accident conditions of transport as required by the regulations.

APPENDIX 13.3
MAXIMUM NORMAL OPERATING PRESSURE OF SEALED SOURCES

1. Maximum Source Temperature, Pressure and Material Data

   MDS Nordion ensures that all sources transported in the F-168 or F-168-X packages do not exceed the sensitization temperature for stainless steel, 900°F. For these calculations, the maximum normal operating temperature of the sealed source is conservatively assumed to be higher than this at 1000°F.

   The source material is 316L stainless steel, with a yield, YS, of

   YS (yield stress) = 14,500 psi at 1000°F [see Appendix 13.9].

2. Maximum Normal Operating Pressure

   If the source is conservatively assumed to be at 70°F at atmospheric pressure, the source pressure at 1000°F is calculated as,

   $P2 = P1*T2/T1$

   $P2 = 14.7*(1000+460)/(70+460) = 40.5$ psia

   When the source capsule is in the container, the capsule will be subjected to internal pressure = 40.5-14.7 = 25.8 psi.

APPENDIX 13.6

6. ASSESSMENT OF COMPRESSION TEST: PARAGRAPH 623

6.1 Requirement

Test capability of F-168 package to support a load equivalent to 5 times the weight of package (i.e. W = 5 x 12000 = 60000 lbs).

6.2 The F-168 package is loaded as per figures A13-6.1/A13-6.3. The cylinder proper takes up the compressive load; transferring the compressive load to the skid via its structural members .

6.3 Cylinder Proper (Member #1) Under Compressive Load

See Figure A13-6.1.

Data OD = 28.375"
Wall = 0.375"
Length, L = 41.375"

Assume: Fixed ends

Estimate Critical load using Johnson's Formula (Ref. (20))

$$Fc = Sy \times A \times \quad 1 - \frac{Sy\ (Le/K)}{4\pi^2 E}$$

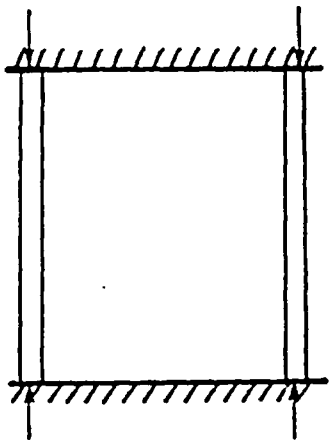

FIGURE A13-6.1

where SY = yield stress = 36000 psi (ASTM A-36)
Le = L/2 = 41.375/2 = 20.6875 in. effective length
K = radius of gyration = τ_x = 0.3535 x D = .3535 x 28.375
= 10.03 in.
E = Modulus of Elasticity = 2.9 x 10^7 psi
A = Cross Sectional Area = π x 28.375 x 0.375 = 33.43 in^2.
I = π t $d^3/8$ = π x 0.375 x $28.375^3/8$ = 3364.7 in^4

$$F_c = 36{,}000 \times 33.43 \quad 1 - \frac{36000 \times (20.6875/10.03)^2}{4 \times \pi^2 \times 29 \times 10^6}$$

F_c = 1,203,319 lbs

$$\text{S.F (safety Factor)} = \frac{\text{Allowable Load}}{\text{Applied Load}}$$

$$= \frac{1{,}203{,}319 \text{ lbs}}{60000 \text{ lbs}}$$

= 20.

Conclude: Plenty

6.6 Permanent (Fixed) Skid Channel Under compressive Load

See Figure A13-6.2.

Assume Fixed both ends (bolted to skid)
Load applied at center of span

$$_{max} = \frac{WL}{8Z}$$

where W = 5 x 12000 x 0.5 lbs
L = 36. in.
Z = Section Modulus in^3 (for 8 x 2.5 x 18.75 lbs/ft channel.)

$$_{max} = \frac{5 \times 12000 \times 0.5}{8} \times \frac{36}{10.9}$$

= 12385. psi

The yield stress of ASTM A-36 (YS) = 36000 psi
UTS of ASTM A-36 (UTS) = 58000 psi - 80000 psi range

Conclude # Channel Member stresses do not exceed yield stress.

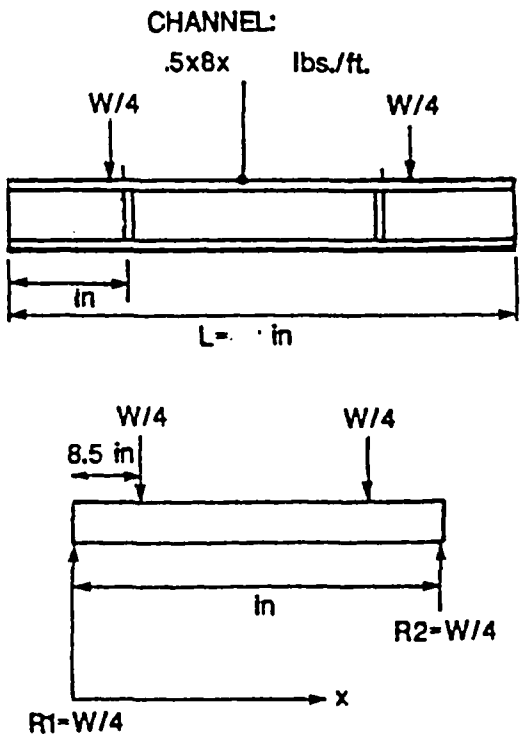

FIGURE A13-6.2

APPENDIX 13.7

7. ASSESSMENT OF PENETRATION TEST AS PER PARAGRAPH 624 OF REF (1)

Puncture of the ordinary steel plate:

The penetration test is carried out using 6 kg (13 lb), 3.2 cm (1-1/4 in) diameter bar with hemispherical end dropped 1m (40 in) on the heads of a package.

The following equation for incipient puncture of ordinary steel plate is extracted from Ref. (26):

$$E = 2.135 \times 10^5 D^{1.55} T^{1.618}$$

where E = energy in-lb
D = piston diameter (in)
T = plate thickness (in)

for E = 13 x 40 = 520 in-lb
D = 1.25 in
the calculated T = 0.020 in

This calculation suggests that if a carbon steel plate, not backed by lead or other material, were subjected to a penetration test, a plate of thickness greater than 0.020 in. is not likely to be punctured.

The actual thickness of the carbon steel shell of the F-168 container assembly is 0.375 in. If the container assembly independently, (i.e. stand-alone) were subjected to regulatory penetration test, the 0.375 in. thick plate is more than sufficient to resist puncture.

Furthermore, the container is enclosed by a fireshield assembly. The cylindrical fireshield assembly is sandwich construction with 0.25 in steel /1 in. thermal insulation / 0.25 in. steel. As the actual thickness of steel plate is (0.250") is greater than the minimum required thickness of 0.020", the cylindrical fireshield assembly is not likely to be punctured, but may get dented when subjected to penetration test as per paragraph 624 of Ref (1).

APPENDIX 13.8

8. WATER IMMERSION TEST - OUTER SHELL ASSEMBLY UNDER EXTERNAL PRESSURE - PARAGRAPH 629

8.1 See Figure A13-8.1

8.2 Reference - ASME, Section VIII, Division I.

8.3 For cylindrical shell under external pressure (material HRS A-36)

Wall thickness	t = 0.375 in.
Length of shell	L = 41.375
Outside diameter	Do = 28.375
Ratio	L/Do = 1.458
Ratio	Do/t = 75.67
From Fig. 5 UGO-28.0	Factor A = 0.0014
From Fig. UCS-28.2 of ASME Section VIII, Div. 1	

Factor B = 13,500
PDo/t = 13,500 where P = collapse pressure
P = 13,500/75.67 = 178.4 psi.

Collapse Pressure P_1

$$P_1 = 178.4 \times \text{Code factor of safety} \times \frac{\text{YS of shell material}}{\text{YS of material (chart)}}$$

$$= 178.4 \times 4 \times \frac{36000}{30000}$$

$$= 856 \text{ psi}$$

Hence, the cylindrical shell is capable of withstanding 856 psi of external pressure before collapse can be initiated. The calculation ignores the credit due to restraining effect of lead.

8.4 The outside shell assembly is quite capable of withstanding an external pressure of water of 1.5 kg/cm^2 (gauge) (or 21.3 psig) as per paragraph 629. Therefore, the cylindrical shell of the F-168 container proper is demonstrated to meet paragraph 629 of IAEA SS6 (Ref. 1).

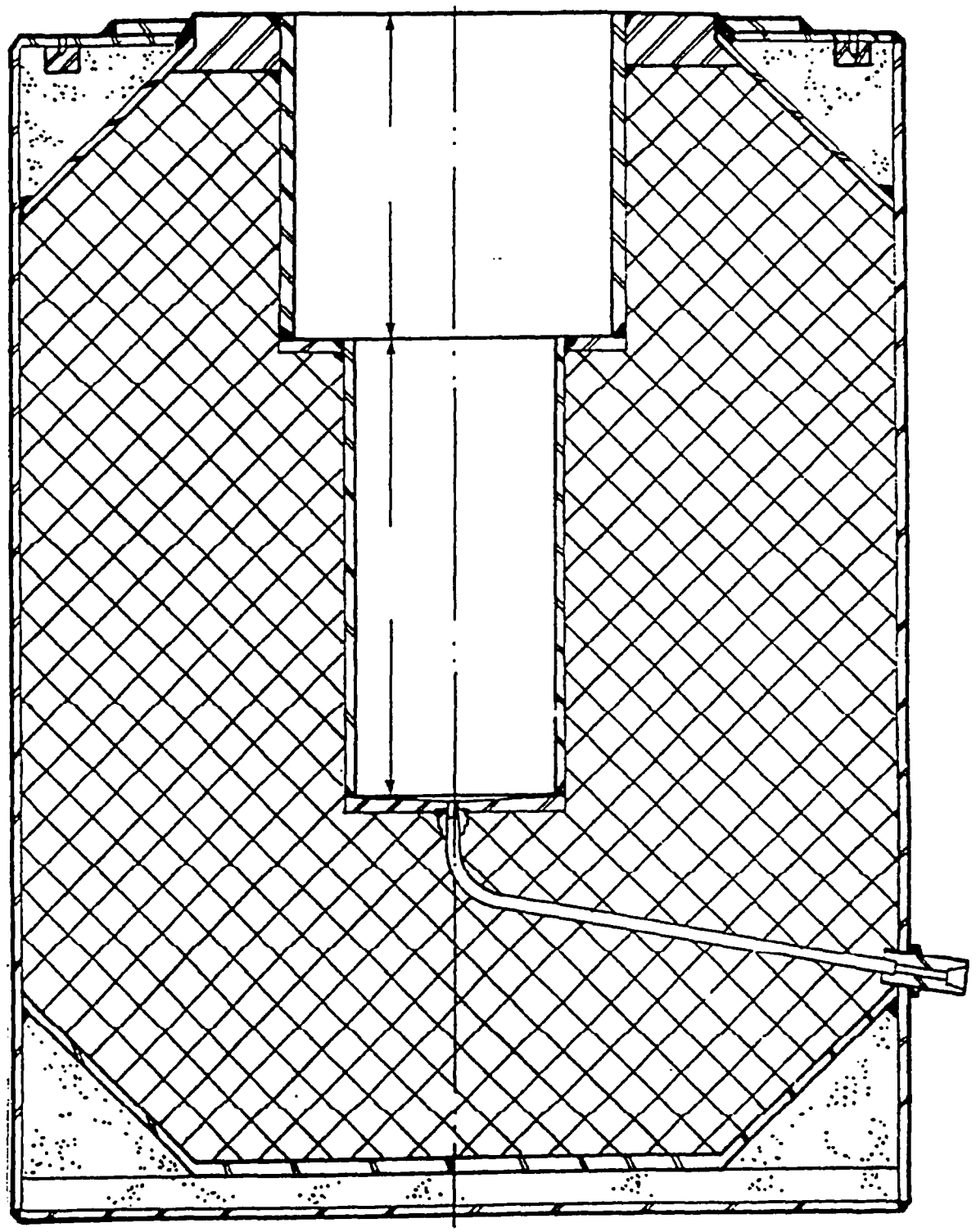

Figure A13-8.1

APPENDIX 13.9

REFERENCE MATERIAL

APPENDIX 14:
Drop Tests

References for Appendix 14

1. IAEA SS6 Regulations for the Safe Transport of Radioactive Materials, 1985 Edition, Supplement 1988.
3. CPR-37 Report, Rev. 1, Evaluation of AECL-CP Shipping Flask Model F-168, November 1982, Nordion.
4. IAEA SS6 Regulations for the Safe Transport of Radioactive Materials, 1973 Revised Edition, (As Amended), IAEA Vienna 1979 STI/PUB/527.
32. CPR-37 Original Non-consolidated Licensing Submission for F-168 Container.
42. CRNL Report, SP-VIBR-49, Deceleration Measurements During 9.0 meter Drop Tests of Flasks F-143 and F-168, by J.H. Tromp, May 1981.
46. Metallurgical Investigation Report No. 79-2 Revision 1, Nov. 12, 1982 by J. Culbertson.
47. CRNL-2288: Flask Deceleration during impact drop tests: Measurement Technique Development and Calibration by J.H. Tromp, CRNL, AECL, June 1981.
48. CPR-67 Report on 9 meter drop tests of F-168 S/N 13 by W. Gibson, Jan. 1984, Nordion.