Niagara Mohawk Power Corporation
Nine Mile Point Nuclear Station
Unit 2, P. O. Box 63
Lycoming, New York 13093

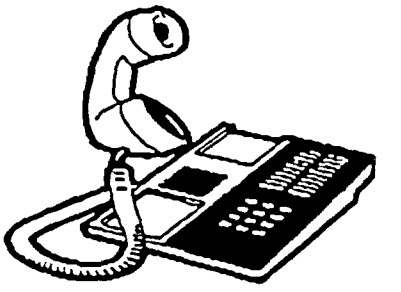

FAX TRANSMITTAL

DARL HOOD

TO: Jack Hayes

DEPT.: NRC

TOTAL NUMBER OF PAGES FAXED (including coversheet) 142

COMMENTS: 301-415-2102

FROM: Ted Kulczycky
Nuclear Engineering, ESB-2
EXT: 1949
FAX: (315) 349-~~1836~~ 1579

NIAGARA MOHAWK NUCLEAR ENGINEERING	CALCULATION COVER SHEET	Page 1 (Next 2____) Total 141 Last 141

NINE MILE POINT NUCLEAR STATION Unit (1, 2 or 0=Both) : _0_ Discipline : HEALTH PHYSICS

Title	Calculation No.			
U1 CONTROL ROOM AIRBORNE DOSES DUE TO LOCA AT UNIT 2 WITH MSIV LEAKAGE OF 9.5 SCFH/MSIV	H21C-069			
	(Sub)system(s) 210	Building TB	Floor Elev. 277'0"	Index No. N/A

Originator(s)
GOPAL J. PATEL (NUCORE CONSULTING SERVICES, INC.)

Checker(s) / Approver(s)
GLENN STINSON/T.G. KULCZYCKY

Rev	Description	Design Change No.	By	Date	Chk	Date	App	Date
00	U1 CR DOSES/U2 LOCA		GJP	5/21/98	[illegible]	5/22/98	TGK	5/22/98

Computer Output/Microfilm Filed Separately (Yes / No / NA): No Safety Class (SR / NSR / Qxx) : SR

Superseded Document(s) : S30.0-CR277.A06-U1.210, REV 0

Document Cross Reference(s) - For additional references see page(s) : 103-107

Ref No	Document No.	Doc Type	Index	Sheet	Rev

General Reference(s) :
See Pages 103-107

Remarks :

Confirmation Required (Yes / No) : No See Page(s) : _____	Final Issue Status (APP / FIO / VOI) : APP	File Location (Calc / Hold) : Calc	Operations Acceptance Required (Yes / No) : No

Evaluation Number(s) / Revision : N/R
Copy of Applicability Review Attached (Yes / N/R)?N/R

Key Words : CONTROL ROOM, HABITABILITY

Component ID(s) / EPN(s) / Line Number(s) :

NIAGARA MOHAWK NUCLEAR ENGINEERING	CALCULATION CONTINUATION SHEET	Page 2 (Next ____)

Nine Mile Point Nuclear Station Unit: 2 Disposition: N/A

Originator/Date	Checker/Date	Calculation No.	Revision
G.J.Patel (NUCORE)/5-21-98	G.R.Stinson / 5-22-98	H21C-069	00

Ref.

TABLE OF CONTENTS

Section	Page
Title	1
Table of Contents	2
Objective	3
Method	3
Data/Assumptions	5
Calculations	21
Post-LOCA Airborne Dose to Unit 1 CR	21
Direct Shine from Unit 2 Secondary Containment	59
Direct Shine from Unit 1 CR Filter	70
External Cloud Shine to Unit 1 CR	81
Skyshine Dose from Unit 2 Containment	94
Results/Conclusions	97
Computer Runs Log	102
References	103
Appendix A (34 pages)	108

NIAGARA MOHAWK NUCLEAR ENGINEERING	CALCULATION CONTINUATION SHEET	Page 3 (Next ____)

Nine Mile Point Nuclear Station Unit: 2 Disposition: N/A

Originator/Date	Checker/Date	Calculation No.	Revision
G.J.Patel (NUCORE)/5-21-98	G.R.Stinson / 5-22-98	H21C-069	00

Ref.

Objective

The purpose of this calculation is to determine the Nine Mile Point Unit 1 30-day integrated control room (CR) doses due to a design basis loss of coolant accident (LOCA) at Nine Mile Point Unit2.

Method

Computer codes DRAGON [Ref. 1] is used to calculate the doses due to airborne sources inside the Unit 1 control room . The contributing sources addressed are:

- Post-LOCA Airborne Dose to Unit 1 CR

  Containment Leakage
  TIP Leakage
  ESF Leakage
  Containment Pressure Control Mode Purge

  Bypass Leakages

  MSIV Leakage (4)
  Main Steam Drain Lines, Inboard & Outboard
  RWCU Line
  Feedwater Line
  Drywell Equipment Drain Line
  Drywell Equipment Drain Tank Vent Line
  Drywell Floor Drain Line
  Drywell Floor Drain Tank Vent Line
  4" CPS Line in drywell
  12" CPS Line in wetwell
  2" CPS Line in drywell
  2" CPS Line in wetwell
  GSN Lines (6)
  IAS Lines (2)
  PASS Lines (4)

Ref.

- Direct Shine Dose from Unit 2 Secondary Containment
  Containment Leakage
  TIP Leakage
  ESF Leakage

- Direct Shine from Unit 1 Control Room Filter

- External Cloud Dose to Unit 1 CR

- Skyshine from Unit 2 Containment

NIAGARA MOHAWK NUCLEAR ENGINEERING	CALCULATION CONTINUATION SHEET	Page 5 (Next ____)

Nine Mile Point Nuclear Station Unit: 2 Disposition: N/A

Originator/Date	Checker/Date	Calculation No.	Revision
G.J.Patel (NUCORE)/5-21-98	G.R.Stinson / 5-22-98	H21C-069	00

Ref.

Data/Assumptions

1. Uprated Core Power Level: 3536 MWt (3467 MWt + 2%) [Refs. 9 & 10]

2. The Core Inventory in Ci/MWt is given in Table 1 in the Calculation Section. [Ref. 9]

3. MSIV Leak Rate: 9.5 scfh per valve (4 valves) TS = 24 scfh/valve [Ref. 11.d]

4. Secondary Containment Drawdown Time is assumed to be 60 minutes [Ref. 13]

5. Drywell Free Air Volume: 306,200 ft^3 [Ref. 13]

6. Wetwell Free Air Volume: 190,600 ft^3 [Ref. 13]

7. Primary Containment Free Air Volume: 4.97E+5 ft^3 Drywell + Wetwell Free Air Volume [Ref. 13]

8. Secondary Containment Free Air Volume: 3.88E+6 ft^3 This is a conservative volume for radiological consequence analyses. A larger volume, 4.12E+6 ft^3 can be obtained from Ref. 19. [Refs. 13 & 14]

9. Suppression Pool Minimum Liquid Volume: 1.45E+5 ft^3 [Ref. 13]

10. Containment Leakage: 1.1 weight % per day, 0 to 30 days [Ref. 11.c]
    0 - 60 minutes: ground level release from reactor building vent
    1 - 720 hrs: elevated release from main stack via SGTS

11. TIP Leakage: 0.12 volume % per day, 0 to 30 days, based on a drywell free air volume of 306,200 ft^3: [Ref. 16.b]
    0 - 60 minutes: ground level release from reactor building vent
    1 - 720 hrs: elevated release from main stack via SGTS

12. ESF Leakage: 61 gpm, 0 to 30 days, [Refs. 24-27]
    0 - 60 minutes: ground level release from reactor building vent
    1 - 720 hrs: elevated release from main stack via SGTS

13. Containment Pressure Control Mode Purge, 0 to 5 seconds, 12.8 ft^3 plus 215 ft^3 in the wetwell and drywell lines elevated release from main stack via SGTS. [Ref.18]

Ref.

An additional 6.4 ft^3 is postulated to be instantaneously released into the SGTS building from a seismic break in the nitrogen supply line, w/o taking credit for check valve 2GSN*V205. A plateout factor of 0.0, and credit for suppression pool scrubbing is taken into account.

14. 25% of the equilibrium core halogens and 100% of the noble gases are <u>assumed</u> to be available for immediate release from the primary containment to the secondary containment and/or environment. [Refs. 4 & 6]

15. The iodine activity is <u>assumed</u> to be 91% elemental, 5% particulate and 4% organic (methyl). [Refs. 4 & 6]

16. The suppression pool post-LOCA source term contains no noble gases and 50% of the core equilibrium halogens. [Ref. 6, Appendix B]

17. Suppression Pool DFs (the ratio of the amount of contaminant entering the suppression pool to the amount leaving): [Refs. 17 & 28]
    a. For noble gases and organic iodine, DF = 1
    b. For elemental and particulate iodine, DF = 10
    c. 0.3% suppression pool bypass

18. 10% of the halogens in the ESF leakage are <u>assumed</u> to become airborne immediately. (The maximum suppression pool temperature is less than 212°F.) [Refs. 6 & 19]

19. Containment Leakage, ESF leakage and TIP leakage are <u>assumed</u> to mix with 50% of the secondary containment atmosphere volume before entering the SGTS for release to the environment. [Ref. 4]

Ref.

20. The following are the secondary containment bypass leakage paths and their release points: [Refs. 11.d, 12 & 20-23]

Line Description	No. of Lines	Release Point
Main Steam Lines (MSIVs)	4	Main Steam Tunnel
Main Steam Drain Lines:		
Inboard	1	Main Steam Tunnel
Outboard	1	Main Steam Tunnel
Post-Accident Sample Lines	4	PASS Panel
Drywell Equipment Drain Line	1	Radwaste/Reactor Bldg Vent
Drywell Equip Drn Tk Vnt Line	1	Radwaste/Reactor Bldg Vent
Drywell Floor Drain Line	1	Radwaste/Reactor Bldg Vent
Drywell Floor Drn Tk Vnt Line	1	Radwaste/Reactor Bldg Vent
RWCU	1	Main Steam Tunnel
Feedwater	1	Main Steam Tunnel
14" CPS Line in Drywell	1	SGTS Bldg, El. 291'-4"
12" CPS Line in Wetwell	1	SGTS Bldg, El. 291'-4"
2" CPS Line in Drywell	1	SGTS Bldg, El. 291'-4"
2" CPS Line in Wetwell	1	SGTS Bldg, El. 291'-4"
GSN Lines	6	SGTS Bldg, El. 278'-6" **
IAS Lines	2	SGTS Bldg, El. 263'-0" **

** Actually in the Nitrogen Storage Area adjacent to the SGTS Bldg.

Ref.

21. Two scenarios are evaluated for LOCA doses: [Refs. 16, 18 & 20-23]
    1. Loss of Diesel Scenario
    2. MSIV Failure Scenario
       The difference is the number of valves per line assumed to fail.

Line Description	Valves Closed w/ Loss of Diesel	Valves Closed w/ MSIV Failure
Main Steam Lines (MSIVs)		
1 Line	2	1
3 Lines	2	2
Main Steam Drain Lines:		
Inboard	1	2
Outboard	1	1
Post-Accident Sample Lines	1	2
Drywell Equipment Drain Line	1	2
Drywell Equip Drn Tk Vnt Line	1	2
Drywell Floor Drain Line	1	2
Drywell Floor Drn Tk Vnt Line	1	2
RWCU	1	2
Feedwater	2	2
14" CPS Line in Drywell	2	2
12" CPS Line in Wetwell	2	2
2" CPS Line in Drywell	2	2
2" CPS Line in Wetwell	2	2
GSN Lines	1	2
IAS Lines	1	2

22. Bypass Leak Rates and Plateout Factors:

Note: The iodine plateout factor (or fraction) is the fraction of the activity at the inlet that is not plated out on the pipe surface by the time it reaches the outlet. The plateout factor is appropriate for the conditions (pressure and temperature) at the time the activity enters the pipe and assumes that those conditions remain constant. As the conditions vary with time, the plateout factors must be adjusted to take into account the delay time it takes for the activity to travel from the inlet to the outlet. The plateout factors do not take into account methyl species, which do not plate out.

NIAGARA MOHAWK NUCLEAR ENGINEERING	CALCULATION CONTINUATION SHEET	Page 9 (Next ____)

Nine Mile Point Nuclear Station Unit: 2 Disposition: N/A

Originator/Date	Checker/Date	Calculation No.	Revision
G.J.Patel (NUCORE)/5-21-98	G.R.Stinson / 5-22-98	H21C-069	00

Ref.

A. Main Steam Lines (MSIVs) 1 Line, 9.5 scfh
Drywell Volume = 284,620 ft^3

	Time (Hrs)	Leak Rate (Vol/Day)	Time (Hrs)	Plateout Factor
1 Valve Closed	0-14.42	0.00E+0	0	0.646
Delay Time = 14.42 Hrs	14.42-24	3.02E-4	0.1	0.623
	24-96	2.86E-4	0.2	0.595
	96-720	2.24E-4	0.4	0.558
			0.8	0.510
			1.5	0.459
	[Ref. 20.d, p. 73A & B]		4.0	0.354
			10.0	0.317
			13.0	0.282
			24.0	0.127
			48.0	0.001
			72.0	0.0

	Time (Hrs)	Leak Rate (Vol/Day)	Time (Hrs)	Plateout Factor
2 Valve Closed	0-19.04	0.00E+0	0	0.563
Delay Time = 19.04 Hrs	19.04-24	2.34E-4	0.1	0.538
	24-96	2.18E-4	0.2	0.506
	96-720	1.63E-4	0.4	0.466
			0.8	0.416
			1.5	0.365
	[Ref. 20.d, p. 68A & B]		4.0	0.259
			10.0	0.226
			13.0	0.195
			24.0	0.070
			48.0	0.0
			72.0	0.0

Nine Mile Point Nuclear Station Unit: 2 Disposition: N/A

Originator/Date	Checker/Date	Calculation No.	Revision
G.J.Patel (NUCORE)/5-21-98	G.R.Stinson / 5-22-98	H21C-069	00

Ref.

B. Inboard Main Steam Drain Line
Drywell Volume = 284,620 ft^3

	Time (Hrs)	Leak Rate (Vol/Day)	Plateout Factor
1 Valve Closed	0-5.12	0	0
	5.12-8	5.93E-5	0.0
	8-24	5.97E-5	0.0
	24-96	5.64E-5	0.0
	96-720	4.42E-5	0.0
		[Ref. 20, p. 75L]	[Ref. 23, p. 18]

	Time (Hrs)	Leak Rate (Vol/Day)	Plateout Factor
2 Valves Closed	0-6.86	0	0
	6.86-8	4.57E-5	0.0
	8-24	4.62E-5	0.0
	24-96	4.30E-5	0.0
	96-720	3.21E-5	0.0
		[Ref. 20, p. 75G]	[Ref. 23, p. 18]

C. Outboard Main Steam Drain Line
Drywell Volume = 284,620 ft^3

	Time (Hrs)	Leak Rate (Vol/Day)	Plateout Factor
1 Valve Closed	0-8	2.05E-5	0.011
	8-24	1.99E-5	0.001
	24-96	1.88E-5	0.0005
	96-720	1.47E-5	0.0
		[Ref. 20, p. 78]	[Ref. 23, p. 19]

Nine Mile Point Nuclear Station Unit: 2 Disposition: N/A

Originator/Date	Checker/Date	Calculation No.	Revision
G.J.Patel (NUCORE)/5-21-98	G.R.Stinson / 5-22-98	H21C-069	00

Ref.

D. Post-Accident Sample Lines (4)
Drywell Volume = 284,620 ft^3

	Time (Hrs)	Leak Rate (Vol/Day)*	Plateout Factor
1 Valve Closed	0-8	7.69E-6	0.0
	8-24	7.46E-6	0.0
	24-96	7.05E-6	0.0
	96-720	5.52E-6	0.0
		[Ref. 20, p. 113]	[Ref. 23, p. 26]

	Time (Hrs)	Leak Rate (Vol/Day)*	Plateout Factor
2 Valves Closed	0-8	5.92E-6	0.0
	8-24	5.77E-6	0.0
	24-96	5.37E-6	0.0
	96-720	4.02E-6	0.0
		[Ref. 20, p. 110C]	[Ref. 23, p. 26]

*per line

E. Drywell Equipment Drain Line
Drywell Volume = 284,620 ft^3

	Time (Hrs)	Leak Rate (Vol/Day)	Plateout Factor
1 Valve Closed	0-1.24	0	0.0
	1.24-8	4.01E-5	0.0
	8-24	3.98E-5	0.0
	24-96	3.76E-5	0.0
	96-720	2.94E-5	0.0
		[Ref. 20, p. 93]	[Ref. 23, p. 22]

Nine Mile Point Nuclear Station Unit: 2 Disposition: N/A

Originator/Date	Checker/Date	Calculation No.	Revision
G.J.Patel (NUCORE)/5-21-98	G.R.Stinson / 5-22-98	H21C-069	00

Ref.

	Time (Hrs)	Leak Rate (Vol/Day)	Plateout Factor
2 Valves Closed	0-1.71	0	0
	1.71-8	3.08E-5	0.0
	8-24	3.08E-5	0.0
	24-96	2.86E-5	0.0
	96-720	2.14E-5	0.0
		[Ref. 20, p. 90C]	[Ref. 23, p. 22]

F. Drywell Equip Drain Tank Vent Line
Drywell Volume = 284,620 ft^3

	Time (Hrs)	Leak Rate (Vol/Day)	Plateout Factor
1 Valve Closed	0-0.96	0	0.0
	0.96-8	2.01E-5	0.0
	8-24	1.99E-5	0.0
	24-96	1.88E-5	0.0
	96-720	1.47E-5	0.0
		[Ref. 20, p. 98]	[Ref. 23, p. 23]

	Time (Hrs)	Leak Rate (Vol/Day)	Plateout Factor
2 Valves Closed	0-1.32	0	0
	1.32-8	1.55E-5	0.0
	8-24	1.54E-5	0.0
	24-96	1.43E-5	0.0
	96-720	1.07E-5	0.0
		[Ref. 20, p. 95C]	[Ref. 23, p. 23]

Ref.

G. Drywell Floor Drain Line
Drywell Volume = 284,620 ft^3

	Time (Hrs)	Leak Rate (Vol/Day)	Plateout Factor
1 Valve Closed	0-2.23	0	0
	2.23-8	5.98E-5	0.0
	8-24	5.97E-5	0.0
	24-96	5.64E-5	0.0
	96-720	4.42E-5	0.0
		[Ref. 20, p. 83]	[Ref. 23, p. 20]

	Time (Hrs)	Leak Rate (Vol/Day)	Plateout Factor
2 Valves Closed	0-3.05	0	0
	3.05-8	4.60E-5	0.0
	8-24	4.62E-5	0.0
	24-96	4.30E-5	0.0
	96-720	3.21E-5	0.0
		[Ref. 20, p. 80C]	[Ref. 23, p. 20]

H. Drywell Floor Drain Tank Vent Line
Drywell Volume = 284,620 ft^3

	Time (Hrs)	Leak Rate (Vol/Day)	Plateout Factor
1 Valve Closed	0-1.94	0	0
	1.94-8	2.99E-5	0.0
	8-24	2.98E-5	0.0
	24-96	2.82E-5	0.0
	96-720	2.21E-5	0.0
		[Ref. 20, p. 88]	[Ref. 23, p. 21]

Nine Mile Point Nuclear Station Unit: 2 Disposition: N/A

Originator/Date	Checker/Date	Calculation No.	Revision
G.J.Patel (NUCORE)/5-21-98	G.R.Stinson / 5-22-98	H21C-069	00

Ref.

	Time (Hrs)	Leak Rate (Vol/Day)	Plateout Factor
2 Valves Closed	0-2.67	0	0
	2.67-8	2.30E-5	0.0
	8-24	2.31E-5	0.0
	24-96	2.15E-5	0.0
	96-720	1.61E-5	0.0
		[Ref. 20, p. 85C]	[Ref. 23, p. 21]

I. Reactor Water Cleanup Line
Drywell Volume = 284,620 ft^3

	Time (Hrs)	Leak Rate (Vol/Day)	Plateout Factor
1 Valve Closed	0-8	0	0
	8-13.09	0	0
	13.09-24	7.96E-5	0.0
	24-96	7.51E-5	0.0
	96-720	5.89E-5	0.0
		[Ref. 20, p. 100C]	[Ref. 23, p. 24]

	Time (Hrs)	Leak Rate (Vol/Day)	Plateout Factor
2 Valves Closed	0-8	0	0
	8-17.04	0	0
	17.04-24	6.16E-5	0.0
	24-96	5.73E-5	0.0
	96-720	4.29E-5	0.0
		[Ref. 20, p. 103]	[Ref. 23, p. 24]

Nine Mile Point Nuclear Station Unit: 2 Disposition: N/A

Originator/Date	Checker/Date	Calculation No.	Revision
G.J.Patel (NUCORE)/5-21-98	G.R.Stinson / 5-22-98	H21C-069	00

Ref.

J. Feedwater Line
Drywell Volume = 284,620 ft^3

	Time (Hrs)	Leak Rate (Vol/Day)	Plateout Factor
2 Valves Closed	0-8	0	0
	8-9.61	0	0
	9.61-24	2.96E-4	0.005
	24-96	2.75E-4	0.0
	96-720	2.06E-4	0.0
		[Ref. 20, p. 108]	[Ref. 23, p. 25]

K. 14" CPS Line in Drywell
Drywell Volume = 284,620 ft^3

	Time (Hrs)	Leak Rate (Vol/Day)	Plateout Factor
2 Valves Closed	0-10.58	0	0
	10.58-24	1.08E-4	0.0
	24-96	1.00E-4	0.0
	96-720	7.51E-5	0.0
		[Ref. 21, p. 10]	[Ref. 23, p. 5]

L. 12" CPS Line in Wetwell
Containment Volume = 473,198 ft^3

	Time (Hrs)	Leak Rate (Vol/Day)	Plateout Factor
2 Valves Closed	0-7.73	0	0
	7.73-8	5.50E-5	0.0
	8-24	5.56E-5	0.0
	24-96	5.17E-5	0.0
	96-720	3.87E-5	0.0
		[Ref. 21, p. 14]	[Ref. 23, p. 5]

Nine Mile Point Nuclear Station Unit: 2 Disposition: N/A

Originator/Date	Checker/Date	Calculation No.	Revision
G.J.Patel (NUCORE)/5-21-98	G.R.Stinson / 5-22-98	H21C-069	00

Ref.

M. 2" CPS Line in Drywell
Drywell Volume = 284,620 ft^3

	Time (Hrs)	Leak Rate (Vol/Day)	Plateout Factor
2 Valves Closed	0-0.83	0	0
	0.83-8	1.55E-5	0.0
	8-24	1.54E-5	0.0
	24-96	1.43E-5	0.0
	96-720	1.07E-5	0.0
		[Ref. 21, p. 18]	[Ref. 23, p. 6]

N. 2" CPS Line in Wetwell
Containment Volume = 473,198 ft^3

	Time (Hrs)	Leak Rate (Vol/Day)	Plateout Factor
2 Valves Closed	0-0.83	0	0
	0.83-8	9.35E-6	0.0
	8-24	9.26E-6	0.0
	24-96	8.61E-6	0.0
	96-720	6.44E-6	0.0
		[Ref. 21, p. 22]	[Ref. 23, p. 6]

O. GSN Lines (6)
Drywell Volume = 284,620 ft^3

	Time (Hrs)	Leak Rate (Vol/Day)	Plateout Factor
1 Valve Closed	0-1	0.00E+0	0.0
	1-8	1.16E-4	0.0
	8-24	1.15E-4	0.0
	24-96	1.08E-4	0.0
	96-720	8.48E-5	0.0
		[Ref. 22, p.26]	[Ref. 23, p. 6]

Nine Mile Point Nuclear Station Unit: 2 Disposition: N/A

Originator/Date	Checker/Date	Calculation No.	Revision
G.J.Patel (NUCORE)/5-21-98	G.R.Stinson / 5-22-98	H21C-069	00

Ref.

	Time (Hrs)	Leak Rate (Vol/Day)	Plateout Factor
2 Valves Closed	0-1.36	0.00E+0	0.0
	1.36-8	8.90E-5	0.0
	8-24	8.87E-5	0.0
	24-96	8.25E-5	0.0
	96-720	6.17E-5	0.0
		[Ref. 22, p. 28C]	[Ref. 23, p. 6]

P. IAS Lines (2) per Line
Drywell Volume = 284,620 ft^3

	Time (Hrs)	Leak Rate (Vol/Day)	Plateout Factor
1 Valve Closed	0-0.66	0.00E+0	0.0
	0.66-8	3.03E-5	0.0
	8-24	2.98E-5	0.0
	24-96	2.82E-5	0.0
	96-720	2.21E-5	0.0
		[Ref. 22, p. 35]	[Ref. 23, p. 6]

	Time (Hrs)	Leak Rate (Vol/Day)	Plateout Factor
2 Valves Closed	0-0.9	0.00E+0	0.0
	0.9-8	2.33E-5	0.0
	8-24	2.31E-5	0.0
	24-96	2.15E-5	0.0
	96-720	1.61E-5	0.0
		[Ref. 22, p. 37c]	[Ref. 23, p. 6]

Ref.

23. The Atmospheric Dispersion Factors (X/Q values) for the various release points to the Unit 1 Control Room. [Ref. 29]

	X/Q (sec/m^3)*			
Time (Hrs)	0-8	8-24	24-96	96-720
Main Stack	5.55E-05	2.56E-08	1.37E-08	7.76E-09
Rdwst/Rx Bldg Vent	7.92E-05	5.71E-05	1.68E-05	4.05E-06
Main Steam Tunnel	9.55E-05	6.95E-05	2.09E-05	5.19E-06
PASS Panel	1.48E-04	1.07E-04	3.20E-05	7.83E-06
SGTS Bldg	1.49E-04	1.10E-04	3.36E-05	8.55E-06

Seismic buildings stand scenario

24. Occupancy Factors: [Ref. 29, Table 67]

0-24 Hrs	1.0
24-96 Hrs	0.60
96-720Hrs	0.40

25. The control room normal and Emergency intake rate is 2500 cfm ± 10%. 2200 cfm ± 10% = 2475 cfm, use 2500 cfm. [Ref. 30]

26. The free volume of the NMP 1 control room is 1.306E+5 ft^3. [Refs. 32 & 33]

27. The DF of suppression pool for elemental and particulate iodines = 10 [Ref. 48, Sect III.1]

28. The Control Room Emergency Ventilation System (CREVS) is assumed to initiates at 15 minutes, upon operator action. [Ref. 31]

29. The doors of the control room are weather-stripped and the penetrations sealed to maintain a positive pressure of approximately one-sixteenth of an inch of water (Ref. 12.b, page III-11), however, an unfiltered inleakage of 10 cfm to the control room is assumed per Reference 7, Section III.3.d.(2).(ii). An additional 20 cfm is assumed to account for an unfiltered inleakage through an unsealed drain. The total unfiltered inleakage of 30 cfm is assumed. [Ref. 8]

30. The iodine removal efficiency of the CREVS filter is assumed to be 99% for particulate iodine and 90% for elemental and organic iodines. The weighted filter efficiencies are determined below to account for the 30 cfm unfiltered inleakage to the control room: [(REF 12.c, Sections 3.4.5.b & 3.4.5.c]

Ref.

$$\text{Elemental \& Particulate Weighted Average} = \frac{(0.90*0.91) + (0.99*0.05)}{(0.91 + 0.05)} = 0.905$$

$$\text{Particulate \& Elemental Efficiency} = \frac{(2500\text{ cfm})(.905) + (30\text{ cfm})(0)}{2500\text{ cfm} + 30\text{ cfm}} = 0.894$$

$$\text{Methyl Efficiency} = \frac{(2500\text{ cfm})(.90) + (30\text{ cfm})(0)}{2500\text{ cfm} + 30\text{ cfm}} = 0.889$$

88.7@ 2025

31. The control room recirculation air system has no iodine filter [Ref. 12, Figure III-14]

Ref.

The post-LOCA core inventory is given in the following Table:

Table 1

Core Inventory @ 3467 MWt x 1.02 = 3536 MWt
24 Month Fuel Cycle

NUCLIDE	ACTIVITY (Ci/MWt)	INVENTORY (Ci)
I129	8.72E-04	3.08E+00
I131	2.63E+04	9.30E+07
I132	3.85E+04	1.36E+08
I133	5.50E+04	1.94E+08
I134	6.06E+04	2.14E+08
I135	5.20E+04	1.84E+08
I136	2.51E+04	8.88E+07
Br83	3.12E+03	1.10E+07
Br84	5.54E+03	1.96E+07
Br85	6.64E+03	2.35E+07
Br87	1.12E+04	3.96E+07
Kr83m	3.14E+03	1.11E+07
Kr85m	6.73E+03	2.38E+07
Kr85	3.02E+02	1.07E+06
Kr87	1.29E+04	4.56E+07
Kr88	1.83E+04	6.47E+07
Kr89	2.28E+04	8.06E+07
Xe131m	1.58E+02	5.59E+05
Xe133m	2.31E+03	8.17E+06
Xe133	5.53E+04	1.96E+08
Xe135m	1.04E+04	3.68E+07
Xe135	7.15E+03	2.53E+07
Xe137	4.85E+04	1.71E+08
Xe138	4.61E+04	1.63E+08

Based on Reg. Guide 1.3 and NUREG-0737, 100% of the core noble gases and 50% of the core Halogens are released from the core into the coolant. 100% of the core noble gases and 25% of the core halogens are available for release to the environment via the containment atmosphere. The suppression pool is assumed to contain 50% of the core halogens and 1% of the remaining fission products. For the ESF leakage, 10% of the halogens in the ESF leakage (suppression pool activity) are assumed to become airborne.

Ref.

Calculations

Post-LOCA Airborne Doses Unit 1 CR

The activities released from the various release points are carried over to the Unit 1 CR air intake. The CR doses due to airborne activity inside CR is calculated as follows:

DRAGON computer code (Ref. 1) is used to calculated the CR thyroid, whole body gamma, and beta skin doses.

Twenty DRAGON runs are made in order to determine the total activity inside the Unit 1 CR from the various release paths.

- The containment leakage and TIP leakage are combined, as they travel the same pathway. (Runs 811 & 812)

The bypass leakage paths are combined according to their release points and duration.

- The MSIV, the inboard and outboard main steam drain lines, the RWCU line and the feedwater lines bypass leakages are combined as they are all released via the main steam tunnel. (Runs 817 through 826)

- The drywell equipment drain line, the drywell equipment drain tank vent line, the drywell floor drain line, and the drywell floor drain tank vent line leakages are combined as they all are released via the radwaste/reactor building vent. (Run 827)

- The bypass leakage from the CPS lines in the drywell, the GSN lines and the IAS lines are also combined as they all leak in the vicinity of the SGTS Building. (Runs 829 & 830)

The following releases are modeled alone.

- ESF Leakage (Runs 813 & 814)

- Containment Pressure Control Mode Purge (Runs 815 & 816)

- PASS Panel Leakage (Run 828)

The release model is shown on next page

Nine Mile Point Nuclear Station Unit: 2 Disposition: N/A

Originator/Date	Checker/Date	Calculation No.	Revision
G.J.Patel (NUCORE)/5-21-98	G.R.Stinson / 5-22-98	H21C-069	00

Ref.

The following are the DRAGON run inputs.

Containment leakage and TIP leakage

TS 3/4.6.1.2

The containment leakage and TIP leakage are combined. The containment leakage is 1.1% containment volumes per day. Tip leakage is 0.12% containment volumes per day. Therefore, the total combined leakage is 1.22% containment volumes per day. Scrubbing in the suppression pool with a DF of 10 (D/A 17) for elemental and particulate iodine and 1 for noble gases and organic iodine, and 0.3% (D/A 17) suppression pool bypass is assumed. The leakage is to the secondary containment, where 50% mixing is assumed.

For conservatism, in the accident dose analyses for control room doses, it is assumed that the Containment and TIP leakages are released from the secondary containment at ground level during drawdown (t = 0 to 60 minutes), rather than from the main stack via the SGTS filters. In reality, there will be flow through the SGTS filters at t = 0, along with the exfiltration from the building. A flow rate of 2670 cfm is assumed during drawdown for the release rate from secondary containment to the environment, and 4000 cfm via the SGTS filters after 60 minutes.

Because of a limitation in DRAGON of not allowing the filter efficiencies of the Volume 1 or Volume 2 exhaust filters to be altered after t = 0, two runs are required to model release. The first run models the release during drawdown, 0 to 1 hour. The second run models the release of the activity, via the SGTS filters, after the end of drawdown.

Nine Mile Point Nuclear Station Unit: 2 Disposition: N/A

Originator/Date	Checker/Date	Calculation No.	Revision
G.J.Patel (NUCORE)/5-21-98	G.R.Stinson / 5-22-98	H21C-069	00

Ref.

Run # 811 - Containment/TIP Leakage During Drawdown

Control Card

NN (Number of time intervals) = **6**

NGOPT (Noble gas release option) = **1**, core generated noble gases (due to decay) leak freely into Volume 1 during the event

TRANST (Transit time from release point to receptor) = **0**

CHIQS (Reference value for site X/Q value) = **1.0** sec/m^3

TREACT (Time of reactor shutdown) = **0**

T(1) (Time of incident) = **0**

FRAEL (Fraction of halogen inventory that is available for release to Volume 1 in elemental and particulate form)

The iodine activity released from the core is assumed to be 91% elemental and 5% particulate, 96% total. This fraction is used to account for the effects of suppression pool scrubbing, DF = 10 for elemental and particulate iodine. The suppression pool DFs are defined as the ratio of the amount of containment entering the suppression pool to the amount leaving. FRAEL is the ratio of the amount of activity leaving the suppression pool to the amount entering, or the reciprocal of the DF. In this case, FRAEL accounts for the fraction of the elemental halogens in the core that are available for release from Volume 1.

Taking into account the 0.3% of the drywell atmosphere which is assumed to bypass the suppression pool, the adjusted DF = 10 / [0.997 + (10 x 0.003) = 9.737

Therefore, FRAEL = (1/DF) x 0.25 x 0.96 = (1/9.737) x 0.24 = **0.0246**

FRAMET (Fraction of halogen inventory that is available for release to Volume 1 in methyl form)

The iodine activity released from the core is assumed to be 4% methyl (organic). The DF for methyl iodine is 1.

Therefore, FRAMET = (1/DF) x 0.25 x 0.04 = (1/1) x 0.01 = **0.01**

FRANOB (Fraction of noble gas inventory that is available for release to Volume 1) = **1.0**

RATE (Source leak rate into Volume 1) = **N/A**, (sudden release)

NIAGARA MOHAWK

NINE MILE POINT NUCLEAR STATION
P.O. BOX 63, LYCOMING, NEW YORK 13093

FAX COVER LETTER

NINE MILE POINT UNIT 2

FROM: FAX TELEPHONE NUMBER: (315) 349-1400

NAME: Karen Lampman

DEPARTMENT: LICENSING/ENVIRONMENTAL

TELEPHONE NUMBER:

TO: Darl Hood

FAX #

TOTAL NUMBER OF PAGES FAXED (INCLUDING COVER LETTER): 25

DATE: 5/23/98 TIME: 0808

MESSAGE: Pages 1-25

NIAGARA MOHAWK

NINE MILE POINT NUCLEAR STATION
P.O. BOX 63, LYCOMING, NEW YORK 13093

FAX COVER LETTER

NINE MILE POINT UNIT 2

FROM: FAX TELEPHONE NUMBER: (315) 349-1400

NAME: Keeno Lampman

DEPARTMENT: LICENSING/ENVIRONMENTAL

TELEPHONE NUMBER:

FAX #

TO: Darl Hood

TOTAL NUMBER OF PAGES FAXED (INCLUDING COVER LETTER): ~~25~~ 22

DATE: 5/23/98 TIME: 0808

MESSAGE: ~~Pages 1-25~~ ~~26-46~~ Calculation Pgs 24-44

Niagara Mohawk Power Corporation
Nine Mile Point Nuclear Station
Unit 2, P. O. Box 63
Lycoming, New York 13093

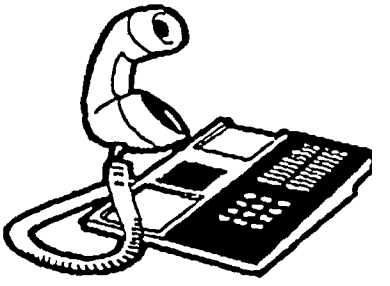

FAX TRANSMITTAL

DARL HOOD

TO: Jack Hayes

DEPT.: NRC

TOTAL NUMBER OF PAGES FAXED (including coversheet) 142

COMMENTS: 301-415-2102

FROM: Ted Kulczycky
Nuclear Engineering, ESB-2
EXT: 1949
FAX: (315) 349-~~1836~~ 1579

Nine Mile Point Nuclear Station Unit: 2 Disposition: N/A

Originator/Date	Checker/Date	Calculation No.	Revision
G.J.Patel (NUCORE)/5-21-98	G.R.Stinson / 5-22-98	H21C-069	00

Ref.

Volume 1 Card - U 2 Primary Containment

V1 (Volume 1 volume) = **4.97E+5** ft^3
RCF1 (Recirc rate in Volume 1) = **N/A**
TRC1 (Recirc start time in Volume 1) = **N/A**
PF1E (Volume 1 recirc filter elemental iodine purification factor) = **N/A**
PF1M (Volume 1 recirc filter methyl iodine purification factor) = **N/A**
R1 (Volume 1 leak rate reference value) = **0.0122** volumes/day
PFEE (Volume 1 exhaust filter elemental iodine purification factor) = **N/A**
PFEM (Volume 1 exhaust filter methyl iodine purification factor) = **N/A**
Volume 1 PFEE and PFEM cannot be used if there is a Volume 2.
LAMDA (Effective chemical spray constant) = **N/A**

Volume 2 Card - U 2 Secondary Containment

V2 (Volume 2 volume) = **3.88E+6** ft^3
RCF2 (Recirc rate in Volume 2) = **N/A**
TRC2 (Recirc start time in Volume 2) = **N/A**
PF2E (Volume 2 recirc filter elemental iodine purification factor) = **N/A**
PF2M (Volume 2 recirc filter methyl iodine purification factor) = **N/A**
R2 (Volume 2 leak rate reference value) 2670 ft^3/min with 50% mixing:
(2670 ft^3/min x 1440 min/day) / (3.88E+6 ft^3/vol x 0.50) = **1.98** vol/day
PFEE (Volume 2 exhaust filter elemental iodine purification factor) = **N/A**
PFEM (Volume 2 exhaust filter methyl iodine purification factor) = **N/A**

Volume 3 Card - U1 Control Room

V3 (Volume 3 volume) = **1.31E+5** ft^3
RCF3 (Recirc rate in Volume 3) = **N/A**
TRC3 (Recirc start time in Volume 3) = **N/A**
PF3E (Volume 3 recirc filter elemental iodine purification factor) = **N/A**
PF3M (Volume 3 recirc filter methyl iodine purification factor) = **N/A**
RV3 (Volume 3 air intake and exhaust leak rate , cfm) = **2530** cfm (0 - 720 hrs)
PFIE (Volume 3 intake filter elemental iodine purification factor) = **0.894**
PFIM (Volume 3 intake filter methyl iodine purification factor) = **0.889**
CHIQ3 (Volume 3 X/Q's, sec/m^3) = **7.92E-5** sec/m^3

Multipliers Cards

J (Interval No.)
DLEAK1 (Volume 1 leak rate multiplier)
DLEAK2 (Volume 2 leak rate multiplier)
DFIE (Volume 3 intake filter elemental purification factor multiplier)
DFIM (Volume 3 intake filter methyl purification factor multiplier)
DRV3 (Volume 3 air intake rate multiplier)

Nine Mile Point Nuclear Station Unit: 2 Disposition: N/A

Originator/Date	Checker/Date	Calculation No.	Revision
G.J.Patel (NUCORE)/5-21-98	G.R.Stinson / 5-22-98	H21C-069	00

Ref.

DEX3 (Volume 3 air exhaust rate multiplier)
W3 (Volume 3 atmospheric dispersion factor multiplier)
BRAT3 (Volumes 1, 2, & 3 breathing rate) = 3.47E-4 m^3/sec
T (Time at the end of the time interval) (hrs)

J =	1	2	3	4	5	6
DLEAK1 =	1.0	1.0	0.0	0.0	0.0	0.0
DLEAK2 =	1.0	1.0	0.0	0.0	0.0	0.0
DFIE =	0.0	1.0	1.0	1.0	1.0	1.0
DFIM =	0.0	1.0	1.0	1.0	1.0	1.0
DRV3 =	1.0	1.0	1.0	1.0	1.0	1.0
DRX3 =	1.0	1.0	1.0	1.0	1.0	1.0
W3 =	1.0	1.0	0.0	0.0	0.0	0.0
BRAT3 =	1.0	1.0	1.0	1.0	1.0	1.0
T =	0.25	1	8	24	96	720

Nine Mile Point Nuclear Station Unit: 2 Disposition: N/A

Originator/Date	Checker/Date	Calculation No.	Revision
G.J.Patel (NUCORE)/5-21-98	G.R.Stinson / 5-22-98	H21C-069	00

Ref.

Run # 812 - Containment/TIP Leakage from Primary Containment After Drawdown

Control Card

NN (Number of time intervals) = **6**
NGOPT (Noble gas release option) = **1**, core generated noble gases (due to decay) leak freely into Volume 1 during the event
TRANST (Transit time from release point to receptor) = **0**
CHIQS (Reference value for site X/Q value) = **1.0** sec/m^3
TREACT (Time of reactor shutdown) = **0**
T(1) (Time of incident) = **0**
FRAEL (Fraction of halogen inventory that is available for release to Volume 1 in elemental and particulate form) = **0.0246**
FRAMET (Fraction of halogen inventory that is available for release to Volume 1 in methyl form) = **0.01**
FRANOB (Fraction of noble gas inventory that is available for release to Volume 1) = **1.0**
RATE (Source leak rate into Volume 1) = **N/A**, (sudden release)

Volume 1 Card - U2 Primary Containment

V1 (Volume 1 volume) = **4.97E+5** ft^3
RCF1 (Recirc rate in Volume 1) = **N/A**
TRC1 (Recirc start time in Volume 1) = **N/A**
PF1E (Volume 1 recirc filter elemental iodine purification factor) = **N/A**
PF1M (Volume 1 recirc filter methyl iodine purification factor) = **N/A**
R1 (Volume 1 leak rate reference value) = **0.0122** volumes/day
PFEE (Volume 1 exhaust filter elemental iodine purification factor) = **N/A**
PFEM (Volume 1 exhaust filter methyl iodine purification factor) = **N/A**
LAMDA (Effective chemical spray constant) = **N/A**

Volume 2 Card - U2 Secondary Containment

V2 (Volume 2 volume) = **3.88E+6** ft^3
RCF2 (Recirc rate in Volume 2) = **N/A**
TRC2 (Recirc start time in Volume 2) = **N/A**
PF2E (Volume 2 recirc filter elemental iodine purification factor) = **N/A**
PF2M (Volume 2 recirc filter methyl iodine purification factor) = **N/A**
R2 (Volume 2 leak rate reference value) 4000 ft^3/min with 50% mixing:
(4000 ft^3/min x 1440 min/day) / (3.88E+6 ft^3/vol x 0.50) = **2.97** vol/day (**1.98** vol/day for 0-1 hr)
PFEE (Volume 2 exhaust filter elemental iodine purification factor) = **0.99**
PFEM (Volume 2 exhaust filter methyl iodine purification factor) = **0.99**
SGTS Filters

Nine Mile Point Nuclear Station Unit: 2 Disposition: N/A

Originator/Date	Checker/Date	Calculation No.	Revision
G.J.Patel (NUCORE)/5-21-98	G.R.Stinson / 5-22-98	H21C-069	00

Ref.

Volume 3 Card - U1 Control Room

V3 (Volume 3 volume) = **1.31E+5** ft^3
RCF3 (Recirc rate in Volume 3) = **N/A**
TRC3 (Recirc start time in Volume 3) = **N/A**
PF3E (Volume 3 recirc filter elemental iodine purification factor) = **N/A**
PF3M (Volume 3 recirc filter methyl iodine purification factor) = **N/A**
RV3 (Volume 3 air intake and exhaust leak rate , cfm) = **2530** cfm (0- 720 hrs)
PFIE (Volume 3 intake filter elemental iodine purification factor) = **0.894**
PFIM (Volume 3 intake filter methyl iodine purification factor) = **0.889**
CHIQ3 (Volume 3 X/Q's, sec/m^3) = **1.0** sec/m^3

Multipliers Cards

J (Interval No.)
DLEAK1 (Volume 1 leak rate multiplier)
DLEAK2 (Volume 2 leak rate multiplier)
DFIE (Volume 3 intake filter elemental purification factor multiplier)
DFIM (Volume 3 intake filter methyl purification factor multiplier)
DRV3 (Volume 3 air intake rate multiplier)
DEX3 (Volume 3 air exhaust rate multiplier)
W3 (Volume 3 atmospheric dispersion factor multiplier)
BRAT3 (Volumes 1, 2, & 3 breathing rate) = 3.47E-4 m^3/sec
T (Time at the end of the time interval) (hrs)

J =	1	2	3	4	5	6
DLEAK1 =	1.0	1.0	1.0	1.0	1.0	1.0
DLEAK2 =	0.668	1.0	1.0	1.0	1.0	1.0
DFIE =	0.0	1.0	1.0	1.0	1.0	1.0
DFIM =	0.0	1.0	1.0	1.0	1.0	1.0
DRV3 =	0.0	1.0	1.0	1.0	1.0	1.0
DRX3 =	0.0	1.0	1.0	1.0	1.0	1.0
W3 =	0.00E+0	5.55E-5	5.55E-5	2.56E-8	1.37E-8	7.76E-9
BRAT3 =	1.0	1.0	1.0	1.0	1.0	1.0
T =	1	2	8	24	96	720

The X/Q value for the first time interval, 0 to 1 hour, is set to 0.0, and the leak rate multiplier, DLEAK1 = 2670 cfm / 4000 cfm = 0.668

Ref.

ESF Leakage

The ESF equipment in secondary containment, which circulates suppression pool activity, is assumed to leak at a rate of 61 gpm into the secondary containment. The suppression pool post-LOCA source term is assumed to contain no noble gases and 50% of the core equilibrium halogens. 10% of the halogens in the ESF leakage are assumed to become airborne immediately upon leaking into the secondary containment. During secondary containment drawdown, t = 0 to 60 minutes, the ESF leakage is assumed to mix with 50% of the secondary containment atmosphere volume and to be released at a rate of 2670 cfm via the reactor building vent at ground level. After depressurization, it is filtered by the SGTS, and exhausted at a rate of 4000 cfm as an elevated release from main stack.

Two DRAGON runs are required to model the ESF leakage. One for the time during depressurization, without credit for the SGTS filters, and the other after drawdown is complete, with credit for the SGTS filters.

The suppression pool post-LOCA source term is assumed to contain no noble gases and 50% of the core equilibrium halogens. The minimum liquid volume is 1.45E+5 ft^3.

Run # 813 - ESF Leakage during Drawdown

Control Card

NN (Number of time intervals) = **6**

NGOPT (Noble gas release option) = **1**, core generated noble gases (due to decay) leak freely into Volume 1 during the event

TRANST (Transit time from release point to receptor) = **0**

CHIQS (Reference value for site X/Q value) = **1.0** sec/m^3

TREACT (Time of reactor shutdown) = **0**

T(1) (Time of incident) = **0**

FRAEL (Fraction of halogen inventory that is available for release to Volume 1 in elemental and particulate form) = **0.5**

10% of the suppression pool halogens in the ESF leakage that are assumed to become airborne. This is modeled as a volume 2 exhaust filter with the elemental purification factor of 0.90.

FRAMET (Fraction of halogen inventory that is available for release to Volume 1 in methyl form) = **0.0**

FRANOB (Fraction of noble gas inventory that is available for release to Volume 1) = **0.0**

Nine Mile Point Nuclear Station Unit: 2 Disposition: N/A

Originator/Date	Checker/Date	Calculation No.	Revision
G.J.Patel (NUCORE)/5-21-98	G.R.Stinson / 5-22-98	H21C-069	00

Ref.

Volume 1 Card - U2 Suppression Pool
V1 (Volume 1 volume) = 1.45E+5 ft^3
RCF1 (Recirc rate in Volume 1) = N/A
TRC1 (Recirc start time in Volume 1) = N/A
PF1E (Volume 1 recirc filter elemental iodine purification factor) = N/A
PF1M (Volume 1 recirc filter methyl iodine purification factor) = N/A
R1 (Volume 1 leak rate reference value)
(61 gal/min x 0.1337 ft^3/gal x 1440 min/day)/1.45E+5 ft^3/vol = 0.0810 volumes/day
PFEE (Volume 1 exhaust filter elemental iodine purification factor) = N/A
PFEM (Volume 1 exhaust filter methyl iodine purification factor) = N/A
LAMDA (Effective chemical spray constant) = N/A

Volume 2 Card - U2 Secondary Containment
V2 (Volume 2 volume) = 3.88E+6 ft^3
RCF2 (Recirc rate in Volume 2) = N/A
TRC2 (Recirc start time in Volume 2) = N/A
PF2E (Volume 2 recirc filter elemental iodine purification factor) = N/A
PF2M (Volume 2 recirc filter methyl iodine purification factor) = N/A
R2 (Volume 2 leak rate reference value) 2670 ft^3 with 50% mixing = 1.98 volumes/day
PFEE (Volume 2 exhaust filter elemental iodine purification factor) = 0.90
(to account for 10% that becomes airborne)
PFEM (Volume 2 exhaust filter methyl iodine purification factor) = 0.0
LAMDA (Effective chemical spray constant) = N/A

Volume 3 Card - U 1 Control Room
V3 (Volume 3 volume) = 1.31E+5 ft^3
RCF3 (Recirc rate in Volume 3) = N/A
TRC3 (Recirc start time in Volume 3) = N/A
PF3E (Volume 3 recirc filter elemental iodine purification factor) = N/A
PF3M (Volume 3 recirc filter methyl iodine purification factor) = N/A
RV3 (Volume 3 air intake and exhaust leak rate , cfm) = 2530 cfm (0 - 720 hrs)
PFIE (Volume 3 intake filter elemental iodine purification factor) = 0.894
PFIM (Volume 3 intake filter methyl iodine purification factor) = 0.889
CHIQ3 (Volume 3 X/Q's, sec/m^3) = 7.92E-5 sec/m^3

Multipliers Cards
J (Interval No.)
DLEAK1 (Volume 1 leak rate multiplier)
DLEAK2 (Volume 2 leak rate multiplier)
DFIE (Volume 3 intake filter elemental purification factor multiplier)
DFIM (Volume 3 intake filter methyl purification factor multiplier)

Nine Mile Point Nuclear Station Unit: 2 Disposition: N/A

Originator/Date	Checker/Date	Calculation No.	Revision
G.J.Patel (NUCORE)/5-21-98	G.R.Stinson / 5-22-98	H21C-069	00

Ref.

DRV3 (Volume 3 air intake rate multiplier)
DEX3 (Volume 3 air exhaust rate multiplier)
W3 (Volume 3 atmospheric dispersion factor multiplier)
BRAT3 (Volumes 1, 2, & 3 breathing rate) = 3.47E-4 m^3/sec
T (Time at the end of the time interval) (hrs)

J =	1	2	3	4	5	6
LEAK1 =	1.0	1.0	0.0	0.0	0.0	0.0
DLEAK2 =	1.0	1.0	0.0	0.0	0.0	0.0
DFIE =	0.0	1.0	1.0	1.0	1.0	1.0
DFIM =	0.0	1.0	1.0	1.0	1.0	1.0
DRV3 =	1.0	1.0	1.0	1.0	1.0	1.0
DRX3 =	1.0	1.0	1.0	1.0	1.0	1.o
BRAT3 =	1.0	1.0	1.0	1.0	1.0	1.0
W3 =	1.0	1.0	0.0	0.0	0.0	0.0
T =	0.25	1	8	24	96	720

Nine Mile Point Nuclear Station Unit: 2 Disposition: N/A

Originator/Date	Checker/Date	Calculation No.	Revision
G.J.Patel (NUCORE)/5-21-98	G.R.Stinson / 5-22-98	H21C-069	00

Ref.

Run # 814 - ESF Leakage after Drawdown

Control Card

NN (Number of time intervals) = **6**

NGOPT (Noble gas release option) = **1**, core generated noble gases (due to decay) leak freely into Volume 1 during the event

TRANST (Transit time from release point to receptor) = **0**

CHIQS (Reference value for site X/Q value) = **1.0** sec/m^3

TREACT (Time of reactor shutdown) = **0**

T(1) (Time of incident) = **0**

FRAEL (Fraction of halogen inventory that is available for release to Volume 1 in elemental and particulate form) = **0.05** (accounts for 10% that becomes airborne)

FRAMET (Fraction of halogen inventory that is available for release to Volume 1 in methyl form) = **0.0**

FRANOB (Fraction of noble gas inventory that is available for release to Volume 1) = **0.0**

Volume 1 Card - U2 Suppression Pool

V1 (Volume 1 volume) = **1.45E+5** ft^3

RCF1 (Recirc rate in Volume 1) = **N/A**

TRC1 (Recirc start time in Volume 1) = **N/A**

PF1E (Volume 1 recirc filter elemental iodine purification factor) = **N/A**

PF1M (Volume 1 recirc filter methyl iodine purification factor) = **N/A**

R1 (Volume 1 leak rate reference value)

(61 gal/min x 0.1337 ft^3/gal x 1440 min/day)/1.45E+5 ft^3/vol = **0.0810** volumes/day

PFEE (Volume 1 exhaust filter elemental iodine purification factor) = **N/A**

PFEM (Volume 1 exhaust filter methyl iodine purification factor) = **N/A**

LAMDA (Effective chemical spray constant) = **N/A**

Volume 2 Card - U2 Secondary Containment

V2 (Volume 2 volume) = **3.88E+6** ft^3

RCF2 (Recirc rate in Volume 2) = **N/A**

TRC2 (Recirc start time in Volume 2) = **N/A**

PF2E (Volume 2 recirc filter elemental iodine purification factor) = **N/A**

PF2M (Volume 2 recirc filter methyl iodine purification factor) = **N/A**

R2 (Volume 2 leak rate reference value) 4000 ft^3 with 50% mixing = **2.97** volumes/day

PFEE (Volume 2 exhaust filter elemental iodine purification factor) = **0.99**

PFEM (Volume 2 exhaust filter methyl iodine purification factor) = **0.0**

LAMDA (Effective chemical spray constant) = **N/A**

Nine Mile Point Nuclear Station Unit: 2 Disposition: N/A

Originator/Date	Checker/Date	Calculation No.	Revision
G.J.Patel (NUCORE)/5-21-98	G.R.Stinson / 5-22-98	H21C-069	00

Ref.

Volume 3 Card - U1 Control Room

V3 (Volume 3 volume) = 1.31E+5 ft^3
RCF3 (Recirc rate in Volume 3) = N/A
TRC3 (Recirc start time in Volume 3) = N/A
PF3E (Volume 3 recirc filter elemental iodine purification factor) = N/A
PF3M (Volume 3 recirc filter methyl iodine purification factor) = N/A
RV3 (Volume 3 air intake and exhaust leak rate , cfm) = 2530 cfm
PFIE (Volume 3 intake filter elemental iodine purification factor) = 0.894
PFIM (Volume 3 intake filter methyl iodine purification factor) = 0.889
CHIQ3 (Volume 3 X/Q's, sec/m^3) = 1.0 sec/m^3

Multipliers Cards

J (Interval No.)
DLEAK1 (Volume 1 leak rate multiplier)
DLEAK2 (Volume 2 leak rate multiplier)
DFIE (Volume 3 intake filter elemental purification factor multiplier)
DFIM (Volume 3 intake filter methyl purification factor multiplier)
DRV3 (Volume 3 air intake rate multiplier)
DEX3 (Volume 3 air exhaust rate multiplier)
W3 (Volume 3 atmospheric dispersion factor multiplier)
BRAT3 (Volumes 1, 2, & 3 breathing rate) = 3.47E-4 m^3/sec
T (Time at the end of the time interval) (hrs)

J =	1	2	3	4	5	6
DLEAK1 =	1.0	1.0	1.0	1.0	1.0	1.0
DLEAK2 =	0.668	1.0	1.0	1.0	1.0	1.0
DFIE =	0.0	1.0	1.0	1.0	1.0	1.0
DFIM =	0.0	1.0	1.0	1.0	1.0	1.0
DRV3 =	0.0	1.0	1.0	1.0	1.0	1.0
DRX3 =	0.0	1.0	1.0	1.0	1.0	1.0
W3 =	0.0	5.55E-5	5.55E-5	2.56E-8	1.37E-8	7.76E-9
T =	1.0	2	8	24	96	720

The X/Q value for the first time interval, 0 to 1 hour, is set to 0.0, and the leak rate multiplier, DLEAK1 = 2670 cfm / 4000 cfm = 0.668

NIAGARA MOHAWK

NINE MILE POINT NUCLEAR STATION
P.O. BOX 63, LYCOMING, NEW YORK 13093

FAX COVER LETTER

NINE MILE POINT UNIT 2

FROM: FAX TELEPHONE NUMBER: (315) 349-1400

NAME: Keena Lampman

DEPARTMENT: LICENSING/ENVIRONMENTAL

TELEPHONE NUMBER:

FAX #

TO: Darl Hood

TOTAL NUMBER OF PAGES FAXED (INCLUDING COVER LETTER): ~~25~~ 22

DATE: 5/23/98 TIME: 0808

MESSAGE: Pages ~~1-25~~ ~~26-46~~ Calculation Pgs 24-44

Niagara Mohawk Power Corporation
Nine Mile Point Nuclear Station
Unit 2, P. O. Box 63
Lycoming, New York 13093

FAX TRANSMITTAL

DARL HOOD

TO: Jack Hayes

DEPT.: NRC

TOTAL NUMBER OF PAGES FAXED (Including coversheet) 142

COMMENTS: 301-415-2102

FROM: Ted Kulczycky
Nuclear Engineering, ESB-2
EXT: 1949
FAX: (315) 349-~~1836~~ 1579

Nine Mile Point Nuclear Station Unit: 2 Disposition: N/A

Originator/Date	Checker/Date	Calculation No.	Revision
G.J.Patel (NUCORE)/5-21-98	G.R.Stinson / 5-22-98	H21C-069	00

Ref.

Containment Pressure Control Mode Purge

This release path is postulated in case the LOCA occurs while containment is being purged, providing a pathway from the primary containment wetwell and drywell to the environment, via the SGTS filters and the main stack.

Containment Pressure Control Mode Purge, 0 to 5 seconds,

There are two release paths:

1) 12.8 ft^3 plus 215 ft^3 in the wetwell and drywell vent lines in an elevated release from main stack via the SGTS filters.

2) 6.4 ft^3 is postulated to be instantaneously released into the SGTS building from a seismic break in the nitrogen supply line, w/o taking credit for check valve 2GSN*V205.

Credit for suppression pool scrubbing is taken into account. DF = 10 for elemental and particulate iodide. 0.3% of the drywell atmosphere bypasses the suppression pool.

Run # 815 - Vent Line Release

Control Card
NN (Number of time intervals) = **6**
NGOPT (Noble gas release option) = **1**, core generated noble gases (due to decay) leak freely into Volume 1 during the event, ("puff" release)
TRANST (Transit time from release point to receptor) = **0**
CHIQS (Reference value for site X/Q value) = **1.0** sec/m^3
TREACT (Time of reactor shutdown) = **0**
T(1) (Time of incident) = **0**
FRAEL (Fraction of halogen inventory that is available for release to Volume 1 in elemental and particulate form)

1) a total of 227.8 ft^3 of containment atmosphere is released from the vent lines
2) the volume of the containment atmosphere is 4.97E+5 ft^3

The fraction of the containment atmosphere that is released is:

227.8 ft^3 / 4.97E+5 ft^3 = 4.58E-4

3) 25% of the core halogens are available for release from the containment

Ref.

atmosphere. Of this, 96% are elemental and particulate, and 4% organic.

4) the suppression pool is assumed to have a DF of 10.

5) 0.3% of the drywell atmosphere is assumed to bypass the suppression pool

The adjusted DF = 10 / [0.997 + (10 x 0.003) = 9.737

FRAEL is redefined here as the fraction of the core activity that is released to the environment.

Therefore, FRAEL = (1/9.737) x 0.25 x 0.96 x 4.58E-4 = **1.13E-5**

FRAMET (Fraction of halogen inventory that is available for release to Volume 1 in methyl form)

FRAMET = 1 x 0.25 x 0.04 x 4.58E-4 = **4.58E-6**

FRANOB (Fraction of noble gas inventory that is available for release to Volume 1) = **4.58E-4**

<u>Volume 1 Card - U1 Primary Containment</u>
V1 (Volume 1 volume) = **4.97E+5** ft^3
RCF1 (Recirc rate in Volume 1) = **N/A**
TRC1 (Recirc start time in Volume 1) = **N/A**
PF1E (Volume 1 recirc filter elemental iodine purification factor) = **N/A**
PF1M (Volume 1 recirc filter methyl iodine purification factor) = **N/A**
R1 (Volume 1 leak rate reference value) = **2.0E+5** volumes/day ("puff" release)
PFEE (Volume 1 exhaust filter elemental iodine purification factor) = **0.99**
PFEM (Volume 1 exhaust filter methyl iodine purification factor) = **0.99**
LAMDA (Effective chemical spray constant) = **N/A**

<u>Volume 3 Card - U1 Control Room</u>
V3 (Volume 3 volume) = **1.31E+5** ft^3
RCF3 (Recirc rate in Volume 3) = **N/A**
TRC3 (Recirc start time in Volume 3) = **N/A**
PF3E (Volume 3 recirc filter elemental iodine purification factor) = **N/A**
PF3M (Volume 3 recirc filter methyl iodine purification factor) = **N/A**
RV3 (Volume 3 air intake and exhaust leak rate , cfm) = **2530** cfm for 0 -720 hrs.
PFIE (Volume 3 intake filter elemental iodine purification factor) = **0.894** after 0.25 hr
PFIM (Volume 3 intake filter methyl iodine purification factor) = **0.889** after 0.25 hr

Ref.

CHIQ3 (Volume 3 X/Q's, sec/m^3) = 5.55E-5 sec/m^3

Multipliers Cards

J (Interval No.)
DLEAK1 (Volume 1 leak rate multiplier)
DLEAK2 (Volume 2 leak rate multiplier)
DFIE (Volume 3 intake filter elemental purification factor multiplier)
DFIM (Volume 3 intake filter methyl purification factor multiplier)
DRV3 (Volume 3 air intake rate multiplier)
DEX3 (Volume 3 air exhaust rate multiplier)
W3 (Volume 3 atmospheric dispersion factor multiplier)
BRAT3 (Volumes 1, 2, & 3 breathing rate) = 3.47E-4 m^3/sec
T (Time at the end of the time interval) (hrs)

J =	1	2	3	4	5	6
DLEAK1 =	1.0	1.0	0.0	0.0	0.0	0.0
DFIE =	0.0	1.0	1.0	1.0	1.0	1.0
DFIM =	0.0	1.0	1.0	1.0	1.0	1.0
DRV3 =	1.0	1.0	1.0	1.0	1.0	1.0
DRX3 =	1.0	1.0	1.0	1.0	1.0	1.o
W3 =	1.0	1.0	0.0	0.0	0.0	0.0
BRAT3 =	1.0	1.0	1.0	1.0	1.0	1.0
T =	0.25	1	8	24	96	720

Run # 816 - Supply Line Release

This release is in the SGTS bldg, in the area above the SGTS filter cubicles.

Control Card

NN (Number of time intervals) = 6
NGOPT (Noble gas release option) = 1, core generated noble gases (due to decay) leak freely into Volume 1 during the event, ("puff" release)
TRANST (Transit time from release point to receptor) = 0
CHIQS (Reference value for site X/Q value) = 1.0 sec/m^3
TREACT (Time of reactor shutdown) = 0
T(1) (Time of incident) = 0
FRAEL (Fraction of halogen inventory that is available for release to Volume 1 in elemental and particulate form)

1) 6.4 ft^3 of containment atmosphere is released from the supply lines
2) the volume of the containment atmosphere is 4.97E+5 ft^3

Ref.

The fraction of the containment atmosphere that is released is:

$$6.4\ ft^3 / 4.97E+5\ ft^3 = 1.29E-5$$

3) 25% of the core halogens are available for release from the containment atmosphere. Of this, 96% are elemental and particulate, and 4% organic.

4) the adjusted suppression pool DF = 9.737

FRAEL is redefined here as the fraction of the core activity that is released to the environment.

Therefore, FRAEL = (1/9.737) x 0.25 x 0.96 x 1.29E-5 = **3.18E-7**

FRAMET (Fraction of halogen inventory that is available for release to Volume 1 in methyl form)

FRAMET = 1 x 0.25 x 0.04 x 1.29E-5 = **1.29E-7**

FRANOB (Fraction of noble gas inventory that is available for release to Volume 1) = **1.29E-5**

<u>Volume 1 Card - U2 Primary Containment</u>
V1 (Volume 1 volume) = **4.97E+5** ft^3
RCF1 (Recirc rate in Volume 1) = **N/A**
TRC1 (Recirc start time in Volume 1) = **N/A**
PF1E (Volume 1 recirc filter elemental iodine purification factor) = **N/A**
PF1M (Volume 1 recirc filter methyl iodine purification factor) = **N/A**
R1 (Volume 1 leak rate reference value) = **2.0E+5** volumes/day ("puff" release)
PFEE (Volume 1 exhaust filter elemental iodine purification factor) = **N/A**
PFEM (Volume 1 exhaust filter methyl iodine purification factor) = **N/A**
LAMDA (Effective chemical spray constant) = **N/A**

<u>Volume 3 Card - U1 Control Room</u>
V3 (Volume 3 volume) = **1.31E+5** ft^3
RCF3 (Recirc rate in Volume 3) = **N/A**
TRC3 (Recirc start time in Volume 3) = **N/A**
PF3E (Volume 3 recirc filter elemental iodine purification factor) = **N/A**
PF3M (Volume 3 recirc filter methyl iodine purification factor) = **N/A**
RV3 (Volume 3 air intake and exhaust leak rate , cfm) = **2530 cfm**

Nine Mile Point Nuclear Station Unit: 2 Disposition: N/A

Originator/Date	Checker/Date	Calculation No.	Revision
G.J.Patel (NUCORE)/5-21-98	G.R.Stinson / 5-22-98	H21C-069	00

Ref.

PFIE (Volume 3 intake filter elemental iodine purification factor) = **0.894**
PFIM (Volume 3 intake filter methyl iodine purification factor) = **0.889**
CHIQ3 (Volume 3 X/Q's, sec/m^3) = **5.55E-5** sec/m^3

Multipliers Cards
J (Interval No.)
DLEAK1 (Volume 1 leak rate multiplier)
DLEAK2 (Volume 2 leak rate multiplier)
DFIE (Volume 3 intake filter elemental purification factor multiplier)
DFIM (Volume 3 intake filter methyl purification factor multiplier)
DRV3 (Volume 3 air intake rate multiplier)
DEX3 (Volume 3 air exhaust rate multiplier)
W3 (Volume 3 atmospheric dispersion factor multiplier)
BRAT3 (Volumes 1, 2, & 3 breathing rate) = 3.47E-4 m^3/sec
T (Time at the end of the time interval) (hrs)

J =	1	2	3	4	5	6
DLEAK1 =	1.0	1.0	0.0	0.0	0.0	0.0
DLEAK2 =	0.0	0.0	0.0	0.0	0.0	0.0
DFIE =	0.0	1.0	1.0	1.0	1.0	1.0
DFIM =	0.0	1.0	1.0	1.0	1.0	1.0
DRV3 =	1.0	1.0	1.0	1.0	1.0	1.0
DRX3 =	1.0	1.0	1.0	1.0	1.0	10
BRAT3 =	1.0	1.0	1.0	1.0	1.0	1.0
W3 =	1.0	1.0	1.0	1.0	1.0	1.0
T =	0.25	1	8	24	96	720

Nine Mile Point Nuclear Station Unit: 2 Disposition: N/A

Originator/Date	Checker/Date	Calculation No.	Revision
G.J.Patel (NUCORE)/5-21-98	G.R.Stinson / 5-22-98	H21C-069	00

Ref.

Bypass Leakage

The bypass leakage paths are combined according to their release points, (see D/A #23).

- The bypass leakage from the MSIVs, the Inboard and Outboard Main Steam Drain Lines, the RWCU line and the Feedwater Line are combined, as they are all released via the main steam tunnel.
- The bypass leakage from the Drywell Equipment Drain Line, the Drywell Equipment Drain Tank Vent Line, the Drywell Floor Drain Line, and the Drywell Floor Drain Tank Vent Line is combined, as they are all released via the Radwaste/Reactor Building Vent.
- The bypass leakage from the 14" CPS Line in the drywell, the 12" CPS Line in the wetwell, the 2" CPS Line in the drywell, the 2" CPS Line in wetwell, six GSN Lines, and two IAS Lines is combined, as they are all assumed to be released via the SGTS Bldg.
- The PASS Panel leakage is modeled alone.

Bypass Leakage Released via the Main Steam Tunnel

The MSIV leak rates are based on a drywell volume of 306,200 ft^3. The leak rates for both the Inboard and Outboard Main Steam Lines, the RWCU Line and the Feedwater Line are based on a drywell volume of 284,620 ft^3. All of the leak rates based on a volume of 284,620 ft^3 are multiplied by 284,620 ft^3 / 306,200 ft^3 = 0.9295 to adjust for the change in drywell volume.

The leak rates and plateout factors for these pathways come from D/A #23.A, B, C, I & J.

There are four main steam lines. In the Loss of Diesel scenario, both valves in all four lines are assumed to close. In the MSIV Failure scenario, one valve in one line is assumed to fail, while both valves in the remaining three lines are assumed to close. Per calc H21C-043-01, pages 10 & 11 (Ref. 35), the MSIV Failure scenario will result in the more conservative doses.

The leak rates and plateout factors for the MSIV leakage given in D/A #23 are adjusted to provide input to DRAGON. The leak rates and plateout factors for the remaining bypass leakage pathways can be used directly.

Ref.

Main Steam Line (MSIVs) 1 Line, 9.5 scfh, 1 Valve Closed
Pipe Length = 98 ft, Delay Time = 14.42 Hrs

The average leak rate from 0.0 to 14.42 hours is:
0.00E+00 vol/day (D/A #23A)

The average leak rate from 14.42 to 24 hours is:
3.02E-4 vol/day (D/A #23A)

The average leak rate from 24 to 96 hours is:
2.86E-4 vol/day (D/A #23A)

The average leak rate from 96 to 720 hours is:
2.24E-4 vol/day (D/A #23A)

The plateout factors given in D/A #23A, are relative to when the activity entered the pipe. As it takes 14.42 hours to travel the length of the pipe, the activity exiting the pipe at 14.42 hrs has the plateout factor for the activity that entered the pipe at t = 0, 0.646

Time at Inlet (Hrs)	Plateout Factor	Time at Outlet (Hrs)
0	0.646	14.42
0.1	0.623	14.52
0.2	0.595	14.62
0.4	0.558	14.82
0.8	0.510	15.22
1.5	0.459	15.92
4	0.354	18.42
10	0.317	24.42
13	0.282	27.42
24	0.127	38.42
48	0.001	62.42
72	0	86.42
96	0	110.42
720	0	734.42

Nine Mile Point Nuclear Station Unit: 2 Disposition: N/A

Originator/Date	Checker/Date	Calculation No.	Revision
G.J.Patel (NUCORE)/5-21-98	G.R.Stinson / 5-22-98	H21C-069	00

Ref.

The plateout factor at 17.04 hrs is the plateout factor for the activity that entered the pipe at t = 17.04 - 14.42 hrs = 2.62 hrs. Therefore, by interpolating between 1.5 hrs and 4 hrs, the plateout factor at 17.04 hrs is:
0.459 - {[(0.459 - 0.354) / (4 hr - 1.5 hr)] x (2.62 hr - 1.5 hr)} = 0.412

The average plateout factor from 14.42 to 17.04 hours is a weighted average of the average leak rates for the intermediate time intervals:
{[(0.646 + 0.623) x 0.1 hr / 2] + [(0.623 + 0.595) x 0.1 hr / 2] +
[(0.595 + 0.558) x 0.2 hr / 2] + [(0.558 + 0.510) x 0.4 hr / 2] +
[(0.510 + 0.459) x 0.7 hr / 2] + [(0.459 + 0.412) x 1.12 hr / 2]} /2.62 hr = 0.488

The plateout factor at 19.04 hours is:
t = 19.04 - 14.42 hrs = 4.62 hrs. Therefore, by interpolating between 4 hrs and 10 hrs, the plateout factor at 19.04 hrs is:

0.354 - {[(0.354 - 0.317)/(10 hr - 4 hr)] x (4.62 hr - 4 hr) = 0.350

The average plateout factor from 17.04 to 19.04 hours is a weighted average of the average leak rates for the intermediate time intervals:
{[(0.412 + 0.354) x 1.38 hr / 2] + [(0.354 + 0.350) x 0.62 hr / 2]} /2 hr = 0.373

The plateout factor at 24 hours is:
0.354 - {[(0.354 - 0.317)/(24.42 hr - 18.42 hr)] x (24 hr - 18.42 hr) =0.320

The average plateout factor from 19.04 to 24 hours:
(0.350 + 0.320) / 2 = 0.335

The plateout factor at 96 hours is 0

The average plateout factor from 24 to 96 hours:
{[(0.320 + 0.317) x (0.42 hr) / 2] + [(0.317 + 0.282) x (3 hr) / 2] +
[(0.282 + 0.127) x (11 hr) / 2] + [(0.127 + 0.001) x (24 hr) / 2] +
[(0.001 + 0.00) x (24 hr) / 2]} / (72 hr) = 0.067

The plateout factors after 96 hours are 0

The plateout factor is defined as the fraction of the elemental and particulate iodine activity that enters the line which remains airborne at the outlet of the line. The methyl (organic) iodine is assumed not to plateout. To equate the plateout factor to a filter efficiency, for input to DRAGON, the filter efficiency is
1.0 minus the plateout factor.

Nine Mile Point Nuclear Station Unit: 2 Disposition: N/A

Originator/Date	Checker/Date	Calculation No.	Revision
G.J.Patel (NUCORE)/5-21-98	G.R.Stinson / 5-22-98	H21C-069	00

Ref.

Time Interval (Hrs)	Plateout Factor	Elemental & Particulate Iodine Filter Efficiency	Methyl Iodine Filter Efficiency
14.42 - 17.04	0.488	0.512	0
17.04 - 19.04	0.373	0.627	0
19.04 - 24	0.335	0.665	0
24-96	0.067	0.933	0
96-720	0	1.0	0

Main Steam Line (MSIVs) 1 Line, 9.5 scfh, 2 Valves Closed
Pipe Length = 98 ft, Delay Time = 19.04 Hrs

The average leak rate from 0.0 to 19.04 hours is:
0.00E+00 vol/day (D/A #23A)

The average leak rate from 19.04 to 24 hours is:
2.34E-4 vol/day (D/A #23A)

The average leak rate from 24 to 96 hours is:
2.18E-4 vol/day (D/A #23A)

The average leak rate from 96 to 720 hours is:
1.63E-4 vol/day (D/A #23A)

The plateout factors given in D/A #23A, are relative to when the activity entered the pipe. As it takes 19.04 hours to travel the length of the pipe, the activity exiting the pipe at 19.04 hrs has the plateout factor for the activity that entered the pipe at t = 0, 0.563

Nine Mile Point Nuclear Station Unit: 2 Disposition: N/A

Originator/Date	Checker/Date	Calculation No.	Revision
G.J.Patel (NUCORE)/5-21-98	G.R.Stinson / 5-22-98	H21C-069	00

Ref.

Time at Inlet (Hrs)	Plateout Factor	Time at Outlet (Hrs)
0	0.563	19.04
0.1	0.538	19.14
0.2	0.506	19.24
0.4	0.466	19.44
0.8	0.416	19.84
1.5	0.365	20.54
4	0.259	23.04
10	0.226	29.04
13	0.195	32.04
24	0.070	43.04
48	0.0	67.04
72	0	91.04
96	0	115.04
720	0	739.04

The plateout factor at 24.0 hrs is the plateout factor for the activity that entered the pipe at t = 24.0 - 19.04 hrs = 4.96 hrs. Therefore, by interpolating between 4 hrs and 10 hrs, the plateout factor at 24.0 hrs is:

0.259 - {[(0.259 - 0.226) / (10 hr - 4 hr)] x (4.96 hr - 4 hr)} = 0.254

The average plateout factor from 19.04 TO 24.0 hours is a weighted average of the average leak rates for the intermediate time intervals:
{[(0.563 + 0.538) x 0.1 hr / 2] + [(0.538 + 0.506) x 0.1 hr / 2] +
[(0.506 + 0.466) x 0.2 hr / 2] + [(0.466 + 0.416) x 0.4 hr / 2] +
[(0.416 + 0.365) x 0.7 hr / 2] + [(0.365 + 0.259) x 2.5 hr / 2] +
[(0.259 + 0.254) x 0.96 hr / 2]} / 4.96 hr = 0.339

The plateout factor at 96 hours is 0

The average plateout factor from 24 to 96 hours:
{[(0.254 + 0.226) x (5.04 hr) / 2] + [(0.226 + 0.195) x (3 hr) / 2] +
[(0.195 + 0.070) x (11 hr) / 2] + [(0.070 + 0.00) x (24 hr) / 2]} / (72 hr)
= 0.0575

Nine Mile Point Nuclear Station Unit: 2 Disposition: N/A

Originator/Date	Checker/Date	Calculation No.	Revision
G.J.Patel (NUCORE)/5-21-98	G.R.Stinson / 5-22-98	H21C-069	00

Ref.

The plateout factors after 96 hours are 0

The filter efficiency is:

Time Interval (Hrs)	Plateout Factor	Elemental & Particulate Iodine Filter Efficiency	Methyl Iodine Filter Efficiency
19.04 - 24	0.339	0.661	0
24 - 96	0.057	0.943	0
96-720	0	1.0	0

Nine Mile Point Nuclear Station Unit: 2 Disposition: N/A

Originator/Date	Checker/Date	Calculation No.	Revision
G.J.Patel (NUCORE)/5-21-98	G.R.Stinson / 5-22-98	H21C-069	00

Ref.

Post-LOCA Bypass Leakage From Unit 2 LOCA (Vol/day)							
Time	MSIV Leakage		Main Steam Drain Line				
(Hrs)	w/1Valve	w/2 Valve*	Inboard	Outboard	RWCU	Feedwater	Total **
0 - 6.86	0.00E+00	0.00E+00	0.00E+00	2.05E-05	0.00E+00	0.00E+00	1.91E-05
6.86 - 8	0.00E+00	0.00E+00	4.57E-05	2.05E-05	0.00E+00	0.00E+00	6.15E-05
8 - 9.61	0.00E+00	0.00E+00	4.62E-05	1.99E-05	0.00E+00	0.00E+00	6.14E-05
9.61-13-09	0.00E+00	0.00E+00	4.62E-05	1.99E-05	0.00E+00	2.96E-04	3.37E-04
13.09 - 14.4	0.00E+00	0.00E+00	4.62E-05	1.99E-05	0.00E+00	2.96E-04	3.37E-04
14.4 - 17.04	3.02E-04	0.00E+00	4.62E-05	1.99E-05	0.00E+00	2.96E-04	6.17E-04
17.04-19.04	3.02E-04	0.00E+00	4.62E-05	1.99E-05	6.16E-05	2.96E-04	6.75E-04
19.04 - 24	3.02E-04	7.02E-04	4.62E-05	1.99E-05	6.16E-05	2.96E-04	1.33E-03
24 - 96	2.86E-04	6.54E-04	4.30E-05	1.88E-05	5.73E-05	2.75E-04	1.24E-03
96 - 720	2.24E-04	4.89E-04	3.21E-05	1.47E-05	4.29E-05	2.06E-04	9.38E-04

* Value corresponds to 3 x 1 Line w/2 valves closed
** Total leak rate is adjusted by 284,620/306,200 = 0.9295

Plateout Factors						
Time	MSIV Leakage		Main Steam Drain Line			
(Hrs)	w/1Valve	w/2 Valve	Inboard	Outboard	RWCU	Feedwater
0 - 6.86				0.011		
6.86 - 8			0	0.011		
8 - 9.61			0	0.001		
9.61-13-09			0	0.001		0.005
13.09 - 14.4			0	0.001	0	0.005
14.4 - 17.04	0.488		0	0.001	0	0.005
17.0-19.04	0.373		0	0.001	0	0.005
19.04 - 24	0.335	0.339	0	0.001	0	0.005
24 - 96	0.067	0.057	0	0.0005	0	0.005
96 - 720	0	0	0	0	0	0.005

Niagara Mohawk Power Corporation
Nine Mile Point Nuclear Station
Unit 2, P. O. Box 63
Lycoming, New York 13093

FAX TRANSMITTAL

DARL HOOD

TO: Jack Hayes

DEPT.: NRC

TOTAL NUMBER OF PAGES FAXED (including coversheet) 142

COMMENTS: 301-415-2102

FROM: Ted Kulczycky
Nuclear Engineering, ESB-2
EXT: 1949
FAX: (315) 349-~~1836~~ 1579

NIAGARA MOHAWK

NINE MILE POINT NUCLEAR STATION
P.O. BOX 63, LYCOMING, NEW YORK 13093

FAX COVER LETTER

NINE MILE POINT UNIT 2

FROM: FAX TELEPHONE NUMBER: (315) 349-1400

NAME: Keero Lampman

DEPARTMENT: LICENSING/ENVIRONMENTAL

TELEPHONE NUMBER:

FAX #

TO: Darl Hood

TOTAL NUMBER OF PAGES FAXED (INCLUDING COVER LETTER): ~~25~~ ~~22~~ 17

DATE: 5/23/98 TIME: 0808

MESSAGE: Pages ~~1-25~~ ~~26-46~~ ~~24-44~~ Calculation Pgs 44-58

Nine Mile Point Nuclear Station Unit: 2 Disposition: N/A

Originator/Date	Checker/Date	Calculation No.	Revision
G.J.Patel (NUCORE)/5-21-98	G.R.Stinson / 5-22-98	H21C-069	00

Ref.

An effective filter efficiency for each time interval is calculated using the flow rates and filter efficiencies for each pathway, as follows, for the 24 to 96 hr time interval:

[(0.933 x 2.86E-4 vol/day) + (0.943 x 6.54E-04 vol/day) +
(1.0 x 4.30E-5 vol/day) + (1.0 x 1.88E-5 vol/day) +
(1.0 x 5.73E-05 vol/day) + (1.0 x 2.74E-4 vol/day)] / 1.24E-3 vol/day = 0.958

Time (Hrs)	EFFECTIVE FILTER EFFICIENCY						TOTAL
	MSIV LEAKAGE		MS DRAIN LINES		RWCU	FEEDWATER	
	w/1Valve	w/2 Valve*	Inboard	Outboard			
0 - 6.86	0.000	0.000	0.000	0.989	0.000	0.000	0.989
6.86 - 8	0.000	0.000	1.000	0.989	0.000	0.000	0.997
8 - 9.61	0.000	0.000	1.000	0.999	0.000	0.000	1.000
9.61-13-09	0.000	0.000	1.000	0.999	0.000	0.995	0.995
13.09 - 14.4	0.000	0.000	1.000	0.999	0.000	0.995	0.995
14.4 - 17.04	0.512	0.000	1.000	0.999	0.000	0.995	0.776
17.04-19.04	0.627	0.000	1.000	0.999	1.000	0.995	0.842
19.04 - 24	0.665	0.661	1.000	0.999	1.000	0.995	0.760
24 - 96	0.933	0.943	1.000	1.000	1.000	1.000	0.958
96 - 720	1.000	1.000	1.000	1.000	1.000	1.000	1.000

Nine Mile Point Nuclear Station Unit: 2 Disposition: N/A

Originator/Date	Checker/Date	Calculation No.	Revision
G.J.Patel (NUCORE)/5-21-98	G.R.Stinson / 5-22-98	H21C-069	00

Ref.

Runs # 817 through 826 - Bypass Leakage Released via the Main Steam Tunnel

Because DRAGON does not allow the Volume 1 exhaust filter efficiency to change, a run must be made for each of the first 8 time intervals, and one for the last 3 time intervals, i.e., there are ten runs required to model these releases.

Control Card

NN (Number of time intervals) = **10** maximum
NGOPT (Noble gas release option) = **1**, core generated noble gases (due to decay) leak freely into Volume 1 during the event
TRANST (Transit time from release point to receptor) = **0**
CHIQS (Reference value for site X/Q value) = **1.0** sec/m^3
TREACT (Time of reactor shutdown) = **0**
T(1) (Time of incident) = **0**
FRAEL (Fraction of halogen inventory that is available for release to Volume 1 in elemental and particulate form) FRAEL = (1/9.737) x 0.25 x 0.96 = **0.0246**
FRAMET (Fraction of halogen inventory that is available for release to Volume 1 in methyl form) FRAMET = 1 x 0.25 x 0.04 = **0.01**
FRANOB (Fraction of noble gas inventory that is available for release to Volume 1) = **1.0**

Volume 1 Card - U2 Drywell

V1 (Volume 1 volume) = **3.06E+5** ft^3
RCF1 (Recirc rate in Volume 1) = **N/A**
TRC1 (Recirc start time in Volume 1) = **N/A**
PF1E (Volume 1 recirc filter elemental iodine purification factor) = **N/A**
PF1M (Volume 1 recirc filter methyl iodine purification factor) = **N/A**
R1 (Volume 1 leak rate reference value) = **1.0** volumes/day
PFEE (Volume 1 exhaust filter elemental iodine purification factor) = Filter efficiencies on previous page.
PFEM (Volume 1 exhaust filter methyl iodine purification factor) = **0.0**
LAMDA (Effective chemical spray constant) = **N/A**

Volume 3 Card - U1 Control Room

V3 (Volume 3 volume) = **1.31E+5** ft^3
RCF3 (Recirc rate in Volume 3) = **N/A**
TRC3 (Recirc start time in Volume 3) = **N/A**
PF3E (Volume 3 recirc filter elemental iodine purification factor) = **N/A**
PF3M (Volume 3 recirc filter methyl iodine purification factor) = **N/A**
RV3 (Volume 3 air intake and exhaust leak rate , cfm) = **2530** cfm (0 - 720 hrs)
PFIE (Volume 3 intake filter elemental iodine purification factor) = **0.894**

Nine Mile Point Nuclear Station Unit: 2 Disposition: N/A

Originator/Date	Checker/Date	Calculation No.	Revision
G.J.Patel (NUCORE)/5-21-98	G.R.Stinson / 5-22-98	H21C-069	00

Ref.

PFIM (Volume 3 intake filter methyl iodine purification factor) = **0.889**
CHIQ3 (Volume 3 X/Q's, sec/m^3) = **1.0** sec/m^3

Multipliers Cards
J (Interval No.)
DLEAK1 (Volume 1 leak rate multiplier)
DFIE (Volume 3 intake filter elemental purification factor multiplier)
DFIM (Volume 3 intake filter methyl purification factor multiplier)
DRV3 (Volume 3 air intake rate multiplier)
DEX3 (Volume 3 air exhaust rate multiplier)
W3 (Volume 3 atmospheric dispersion factor multiplier)
BRAT3 (Volumes 1, 2, & 3 breathing rate) = 3.47E-4 m^3/sec
T (Time at the end of the time interval) (hrs)

J =	1	2	3	4	5	6	7	8	9	10	11
DLEAK1=	1.91E-5	1.91E-5	6.15E-5	6.14E-5	3.37E-4	3.37E-4	6.17E-4	6.75E-4	1.33E-3	1.24E-3	9.38E-4
DFIE =	0.0	1.0	1.0	1.0	1.0	1.0	1.0	1.0	1.0	1.0	1.0
DFIM =	0.0	1.0	1.0	1.0	1.0	1.0	1.0	1.0	1.0	1.0	1.0
DRV3 =	1.121	1.0	1.0	1.0	1.0	1.0	1.0	1.0	1.0	1.0	1.0
DRX3 =	1.121	1.0	1.0	1.0	1.0	1.0	1.0	1.0	1.0	1.0	1.0
W3 =	9.55E-5	9.55E-5	9.55E-5	6.95E-5	6.95E-5	6.95E-5	6.95E-5	6.95E-5	6.95E-5	2.09E-5	5.19E-6
T =	0.25	6.86	8	9.61	13.09	14.4	17.04	19.04	24	96	720

Note: After the first Run No. 817, the first time interval is dropped.

Nine Mile Point Nuclear Station Unit: 2 Disposition: N/A

Originator/Date	Checker/Date	Calculation No.	Revision
G.J.Patel (NUCORE)/5-21-98	G.R.Stinson / 5-22-98	H21C-069	00

Ref.

Bypass Leakage Released via the Radwaste/Reactor Building Vent

Bypass leakage from the Drywell Equipment Drain Line, the Drywell Equipment Drain Tank Vent Line, the Drywell Floor Drain Line, and the Drywell Floor Drain Tank Vent Line are all assumed to be released via the Radwaste/Reactor Building Vent.

The leak rates and plateout factors for these pathways come from D/A #23.E, F, G & H.

Time Interval (Hrs)	Drywell Equipmnt Drain Line	Equipmnt Drain Tank Vent Line	Drywell Floor Drain Line	Floor Drain Tank Vent Line	Totals *	Totals**
0-1.32	0	0	0	0	0.00E+00	0.00E+00
1.32-1.71	0	1.55E-05	0	0	1.55E-05	1.44E-05
1.71-2.67	3.08E-05	1.55E-05	0	0	4.63E-05	4.30E-05
2.67-3.05	3.08E-05	1.55E-05	0	2.30E-05	6.93E-05	6.44E-05
3.05-8	3.08E-05	1.55E-05	4.60E-05	2.30E-05	1.15E-04	1.07E-04
8-24	3.08E-05	1.54E-05	4.62E-05	2.31E-05	1.16E-04	1.08E-04
24-96	2.86E-05	1.43E-05	4.30E-05	2.15E-05	1.07E-04	9.95E-05
96-720	2.14E-05	1.07E-05	3.21E-05	1.61E-05	8.03E-05	7.46E-05

* Based on a Drywell volume of 284,620 ft^3

** Based on a Drywell volume of 306,200 ft^3

Because the plateout factors are 0.0 for all time intervals and all pathways, a single computer model can be used.

Nine Mile Point Nuclear Station Unit: 2 Disposition: N/A

Originator/Date	Checker/Date	Calculation No.	Revision
G.J.Patel (NUCORE)/5-21-98	G.R.Stinson / 5-22-98	H21C-069	00

Ref.

Run # 826 - Bypass Leakage Released via the Radwaste/Reactor Building Vent

Control Card

NN (Number of time intervals) = **8**

NGOPT (Noble gas release option) = **1**, core generated noble gases (due to decay) leak freely into Volume 1 during the event

TRANST (Transit time from release point to receptor) = **0**

CHIQS (Reference value for site X/Q value) = **1.0** sec/m^3

TREACT (Time of reactor shutdown) = **0**

T(1) (Time of incident) = **0**

FRAEL (Fraction of halogen inventory that is available for release to Volume 1 in elemental and particulate form) FRAEL = (1/9.737) x 0.25 x 0.96 = **0.0246**

FRAMET (Fraction of halogen inventory that is available for release to Volume 1 in methyl form) FRAMET = 1 x 0.25 x 0.04 = **0.01**

FRANOB (Fraction of noble gas inventory that is available for release to Volume 1) = **1.0**

Volume 1 Card - U2 Drywell

V1 (Volume 1 volume) = **3.06E+5** ft^3

RCF1 (Recirc rate in Volume 1) = **N/A**

TRC1 (Recirc start time in Volume 1) = **N/A**

PF1E (Volume 1 recirc filter elemental iodine purification factor) = **N/A**

PF1M (Volume 1 recirc filter methyl iodine purification factor) = **N/A**

R1 (Volume 1 leak rate reference value) = **1.0** volumes/day

PFEE (Volume 1 exhaust filter elemental iodine purification factor) = **1.0** (Plateout Factor = 0 for all time intervals for all pathways)

PFEM (Volume 1 exhaust filter methyl iodine purification factor) = **0.0**

LAMDA (Effective chemical spray constant) = **N/A**

Volume 3 Card - U1 Control Room

V3 (Volume 3 volume) = **1.31E+5** ft^3

RCF3 (Recirc rate in Volume 3) = **N/A**

TRC3 (Recirc start time in Volume 3) = **N/A**

PF3E (Volume 3 recirc filter elemental iodine purification factor) = **N/A**

PF3M (Volume 3 recirc filter methyl iodine purification factor) = **N/A**

RV3 (Volume 3 air intake and exhaust leak rate , cfm) = **2530** cfm

PFIE (Volume 3 intake filter elemental iodine purification factor) = **0.894**

PFIM (Volume 3 intake filter methyl iodine purification factor) = **0.889**

CHIQ3 (Volume 3 X/Q's, sec/m^3) = **1.0** sec/m^3

Nine Mile Point Nuclear Station Unit: 2 Disposition: N/A

Originator/Date	Checker/Date	Calculation No.	Revision
G.J.Patel (NUCORE)/5-21-98	G.R.Stinson / 5-22-98	H21C-069	00

Ref.

Multipliers Cards

J (Interval No.)
DLEAK1 (Volume 1 leak rate multiplier)
DFIE (Volume 3 intake filter elemental purification factor multiplier)
DFIM (Volume 3 intake filter methyl purification factor multiplier)
DRV3 (Volume 3 air intake rate multiplier)
DEX3 (Volume 3 air exhaust rate multiplier)
W3 (Volume 3 atmospheric dispersion factor multiplier)
BRAT3 (Volumes 1, 2, & 3 breathing rate) = 3.47E-4 m^3/sec
T (Time at the end of the time interval) (hrs)

J =	1	2	3	4	5	6	7	8
DLEAK1=	0.00E+0	1.44E-5	4.30E-5	6.44E-5	1.07E-4	1.08E-4	9.95E-5	7.46E-5
DFIE =	0.0	1.0	1.0	1.0	1.0	1.0	1.0	1.0
DFIM =	0.0	1.0	1.0	1.0	1.0	1.0	1.0	1.0
DRV3 =	0.0	1.0	1.0	1.0	1.0	1.0	1.0	1.0
DRX3 =	0.0	1.0	1.0	1.0	1.0	1.0	1.0	1.0
BRAT3 =	1.0	1.0	1.0	1.0	1.0	1.0	1.0	1.0
W3 =	7.92E-5	7.92E-5	7.92E-5	7.92E-5	7.92E-5	5.71E-5	1.68E-5	4.05E-6
T =	1.32	1.71	2.67	3.05	8	24	96	720

Nine Mile Point Nuclear Station Unit: 2 Disposition: N/A

Originator/Date	Checker/Date	Calculation No.	Revision
G.J.Patel (NUCORE)/5-21-98	G.R.Stinson / 5-22-98	H21C-069	00

Ref.

Bypass Leakage Released from the PASS Panel

The leak rates and plateout factors for this pathway come from D/A #23.D. The leak rates are multiplied by 4.0 for 4 lines.

Time	Leak Rate (Vol/Day)		
(Hrs)	1 Line	4 Lines	4 Lines *
0-8	5.92E-6	2.37E-5	2.20E-5
8-24	5.77E-6	2.31E-5	2.15E-5
24-96	5.37E-6	2.15E-5	2.00E-5
96-720	4.02E-6	1.61E-5	1.49E-5

* Corrected for Drywell volume of 306,200 ft^3

Run # 828 - Bypass Leakage Released from the PASS Panel

Control Card

NN (Number of time intervals) = **6**
NGOPT (Noble gas release option) = **1**, core generated noble gases (due to decay) leak freely into Volume 1 during the event
TRANST (Transit time from release point to receptor) = **0**
CHIQS (Reference value for site X/Q value) = **1.0** sec/m^3
TREACT (Time of reactor shutdown) = **0**
T(1) (Time of incident) = **0**
FRAEL (Fraction of halogen inventory that is available for release to Volume 1 in elemental and particulate form) = **0.0246**
FRAMET (Fraction of halogen inventory that is available for release to Volume 1 in methyl form) = **0.01**
FRANOB (Fraction of noble gas inventory that is available for release to Volume 1) = **1.0**

Volume 1 Card - U2 Drywell

V1 (Volume 1 volume) = **3.06E+5** ft^3
RCF1 (Recirc rate in Volume 1) = **N/A**
TRC1 (Recirc start time in Volume 1) = **N/A**
PF1E (Volume 1 recirc filter elemental iodine purification factor) = **N/A**
PF1M (Volume 1 recirc filter methyl iodine purification factor) = **N/A**
R1 (Volume 1 leak rate reference value) = **1.0** volumes/day
PFEE (Volume 1 exhaust filter elemental iodine purification factor) = **1.0** (Plateout Factor = 0 for all time intervals)
PFEM (Volume 1 exhaust filter methyl iodine purification factor) = **0.0**
LAMDA (Effective chemical spray constant) = **N/A**

Nine Mile Point Nuclear Station Unit: 2 Disposition: N/A

Originator/Date	Checker/Date	Calculation No.	Revision
G.J.Patel (NUCORE)/5-21-98	G.R.Stinson / 5-22-98	H21C-069	00

Ref.

Volume 3 Card - U1 Control Room

V3 (Volume 3 volume) = 1.31E+5 ft^3
RCF3 (Recirc rate in Volume 3) = N/A
TRC3 (Recirc start time in Volume 3) = N/A
PF3E (Volume 3 recirc filter elemental iodine purification factor) = N/A
PF3M (Volume 3 recirc filter methyl iodine purification factor) = N/A
RV3 (Volume 3 air intake and exhaust leak rate , cfm) = 2530 cfm
PFIE (Volume 3 intake filter elemental iodine purification factor) = 0.894
PFIM (Volume 3 intake filter methyl iodine purification factor) = 0.889
CHIQ3 (Volume 3 X/Q's, sec/m^3) = 1.0 sec/m^3

Multipliers Cards

J (Interval No.)
DLEAK1 (Volume 1 leak rate multiplier)
DFIE (Volume 3 intake filter elemental purification factor multiplier)
DFIM (Volume 3 intake filter methyl purification factor multiplier)
DRV3 (Volume 3 air intake rate multiplier)
DEX3 (Volume 3 air exhaust rate multiplier)
W3 (Volume 3 atmospheric dispersion factor multiplier)
BRAT3 (Volumes 1, 2, & 3 breathing rate) = 3.47E-4 m^3/sec
T (Time at the end of the time interval) (hrs)

J =	1	2	3	4	5	6
DLEAK1=	2.20E-5	2.20E-5	2.20E-5	2.15E-5	2.00E-5	1.49E-5
DFIE =	0.0	1.0	1.0	1.0	1.0	1.0
DFIM =	0.0	1.0	1.0	1.0	1.0	1.0
DRV3 =	1.0	1.0	1.0	1.0	1.0	1.0
DRX3 =	1.0	1.0	1.0	1.0	1.0	1.0
BRAT3 =	1.0	1.0	1.0	1.0	1.0	1.0
W3 =	1.48E-4	1.48E-4	1.48E-4	1.07E-4	3.20E-5	7.83E-6
T =	0.25	2	8	24	96	720

Nine Mile Point Nuclear Station Unit: 2 Disposition: N/A

Originator/Date	Checker/Date	Calculation No.	Revision
G.J.Patel (NUCORE)/5-21-98	G.R.Stinson / 5-22-98	H21C-069	00

Ref.

Bypass Leakage Released via the SGTS Building

The bypass leakage from a 14" and a 2" CPS Line in drywell, a 12" and a 2" CPS Line in wetwell, 6 GSN Lines, and 2 IAS Lines are all assumed to be released from the SGTS building.

The leak rates and plateout factors for these pathways come from Data/Assumptions (D/A) # 23.K through P,.

The leak rates for the CPS Lines in the wetwell are based on a containment volume of 473,198 ft^3. The current updated containment volume is 4.97E+5 ft^3.

The leak rates for the remaining pathways are based on a drywell volume of 284,620 ft^3. The current updated drywell volume is 306,200 ft^3.

Separate runs are made for the releases from the wetwell and the drywell.

In all time intervals for all pathways, the plateout factor is 0.0. Therefore, the filter efficiency for "elemental" iodine is 100%.

Nine Mile Point Nuclear Station Unit: 2 Disposition: N/A

Originator/Date	Checker/Date	Calculation No.	Revision
G.J.Patel (NUCORE)/5-21-98	G.R.Stinson / 5-22-98	H21C-069	00

Ref.

	Bypass Leakage (vol/day) via the SGTS Building					
Time Interval (Hrs)	14" Line in Drywell	2" Line in Drywell	6 GSN Lines	2 IAS Lines	Totals*	Updated Totals**
0-0.83	0.00E+00	0.00E+00	0.00E+00	0.00E+00	0.00E+00	0.00E+00
0.83-0.90	0.00E+00	1.55E-05	0.00E+00	0.00E+00	1.55E-05	0.00E+00
0.90-1.36	0.00E+00	1.55E-05	0.00E+00	4.66E-05	6.21E-05	0.00E+00
1.36-8	0.00E+00	1.55E-05	8.90E-05	4.66E-05	1.51E-04	0.00E+00
8-10.58	0.00E+00	1.54E-05	8.87E-05	4.62E-05	1.50E-04	0.00E+00
10.58-24	1.08E-04	1.54E-05	8.87E-05	4.62E-05	2.58E-04	0.00E+00
24-96	1.00E-04	1.43E-05	8.25E-05	4.30E-05	2.40E-04	0.00E+00
96-720	7.51E-05	1.07E-05	6.17E-05	3.22E-05	1.80E-04	0.00E+00

*Based on a Drywell Volume of 284,620 ft3

**Adjusted to a Drywell Volume of 306,200 ft3 (284,620 / 306,200 = 0.9295)

Bypass Leakage (vol/day) via the SGTS Building				
Time Interval (Hrs)	12" Line in Wetwell	2" Line in Wetwell	Totals*	Updated Totals**
0-0.83	0	0	0.00E+00	0.00E+00
0.83-7.73	0	9.35E-06	9.35E-06	8.90E-06
7.73-8	5.50E-05	9.35E-06	6.44E-05	6.13E-05
8-24	5.56E-05	9.26E-06	6.49E-05	6.18E-05
24-96	5.17E-05	8.61E-06	6.03E-05	5.74E-05
96-720	3.87E-05	6.44E-06	4.51E-05	4.30E-05

*Based on a Containment Volume of 473,198 ft3

**Adjusted to a Containment Volume of 4.97E+5 ft3

(473,198 / 4.97E+5 = 0.9521)

0.9521

Nine Mile Point Nuclear Station Unit: 2 Disposition: N/A

Originator/Date	Checker/Date	Calculation No.	Revision
G.J.Patel (NUCORE)/5-21-98	G.R.Stinson / 5-22-98	H21C-069	00

Ref.

Run # 829 - Bypass Leakage Released from the SGTS Building (from Drywell)

Control Card

NN (Number of time intervals) = **8**
NGOPT (Noble gas release option) = **1**, core generated noble gases (due to decay) leak freely into Volume 1 during the event
TRANST (Transit time from release point to receptor) = **0**
CHIQS (Reference value for site X/Q value) = **1.0** sec/m^3
TREACT (Time of reactor shutdown) = **0**
T(1) (Time of incident) = **0**
FRAEL (Fraction of halogen inventory that is available for release to Volume 1 in elemental and particulate form) = **0.0246**
FRAMET (Fraction of halogen inventory that is available for release to Volume 1 in methyl form) = **0.01**
FRANOB (Fraction of noble gas inventory that is available for release to Volume 1) = **1.0**

Volume 1 Card - U2 Drywell .

V1 (Volume 1 volume) = **306,200** ft^3
RCF1 (Recirc rate in Volume 1) = **N/A**
TRC1 (Recirc start time in Volume 1) = **N/A**
PF1E (Volume 1 recirc filter elemental iodine purification factor) = **N/A**
PF1M (Volume 1 recirc filter methyl iodine purification factor) = **N/A**
R1 (Volume 1 leak rate reference value) = **1.0** volumes/day
PFEE (Volume 1 exhaust filter elemental iodine purification factor) = **1.0** (Plateout Factor = 0 for all time intervals)
PFEM (Volume 1 exhaust filter methyl iodine purification factor) = **0.0**
LAMDA (Effective chemical spray constant) = **N/A**

Volume 3 Card - U1 Control Room

V3 (Volume 3 volume) = **1.31E+5** ft^3
RCF3 (Recirc rate in Volume 3) = **N/A**
TRC3 (Recirc start time in Volume 3) = **N/A**
PF3E (Volume 3 recirc filter elemental iodine purification factor) = **N/A**
PF3M (Volume 3 recirc filter methyl iodine purification factor) = **N/A**
RV3 (Volume 3 air intake and exhaust leak rate , cfm) = **2530** cfm
PFIE (Volume 3 intake filter elemental iodine purification factor) = **0.894**
PFIM (Volume 3 intake filter methyl iodine purification factor) = **0.889**
CHIQ3 (Volume 3 X/Q's, sec/m^3) = **1.0** sec/m^3

Nine Mile Point Nuclear Station Unit: 2 Disposition: N/A

Originator/Date	Checker/Date	Calculation No.	Revision
G.J.Patel (NUCORE)/5-21-98	G.R.Stinson / 5-22-98	H21C-069	00

Ref.

Multipliers Cards

J (Interval No.)
DLEAK1 (Volume 1 leak rate multiplier)
DFIE (Volume 3 intake filter elemental purification factor multiplier)
DFIM (Volume 3 intake filter methyl purification factor multiplier)
DRV3 (Volume 3 air intake rate multiplier)
DEX3 (Volume 3 air exhaust rate multiplier)
W3 (Volume 3 atmospheric dispersion factor multiplier)
BRAT3 (Volumes 1, 2, & 3 breathing rate) = 3.47E-4 m^3/sec
T (Time at the end of the time interval) (hrs)

J =	1	2	3	4	5	6	7	8
DLEAK1=	0.00E+0	1.44E-5	5.77E-5	1.41E-4	1.40E-4	2.40E-4	2.23E-4	1.67E-04
DFIE =	0.0	1.0	1.0	1.0	1.0	1.0	1.0	1.0
DFIM =	0.0	1.0	1.0	1.0	1.0	1.0	1.0	1.0
DRV3 =	1.0	1.0	1.0	1.0	1.0	1.0	1.0	1.0
DRX3 =	1.0	1.0	1.0	1.0	1.0	1.0	1.0	1.0
W3 =	1.49E-4	1.49E-4	1.49E-4	1.49E-4	1.10E-4	1.10E-4	3.36E-5	8.55E-6
T =	0.83	0.90	1.36	8.0	10.58	24	96	720

Ref.

Run # 830 - Bypass Leakage Released from the SGTS Building (from Wetwell)

Control Card

NN (Number of time intervals) = 7

NGOPT (Noble gas release option) = 1, core generated noble gases (due to decay) leak freely into Volume 1 during the event

TRANST (Transit time from release point to receptor) = 0

CHIQS (Reference value for site X/Q value) = 1.0 sec/m^3

TREACT (Time of reactor shutdown) = 0

T(1) (Time of incident) = 0

FRAEL (Fraction of halogen inventory that is available for release to Volume 1 in elemental and particulate form) = 0.0246

FRAMET (Fraction of halogen inventory that is available for release to Volume 1 in methyl form) = 0.01

FRANOB (Fraction of noble gas inventory that is available for release to Volume 1) = 1.0

Volume 1 Card - U2 Containment

V1 (Volume 1 volume) = 4.97E+5 ft^3

RCF1 (Recirc rate in Volume 1) = N/A

TRC1 (Recirc start time in Volume 1) = N/A

PF1E (Volume 1 recirc filter elemental iodine purification factor) = N/A

PF1M (Volume 1 recirc filter methyl iodine purification factor) = N/A

R1 (Volume 1 leak rate reference value) = 1.0 volumes/day

PFEE (Volume 1 exhaust filter elemental iodine purification factor) = 1.0 (Plateout Factor = 0 for all time intervals)

PFEM (Volume 1 exhaust filter methyl iodine purification factor) = 0.0

LAMDA (Effective chemical spray constant) = N/A

Volume 3 Card - U1 Control Room

V3 (Volume 3 volume) = 1.31E+5 ft^3

RCF3 (Recirc rate in Volume 3) = N/A

TRC3 (Recirc start time in Volume 3) = N/A

PF3E (Volume 3 recirc filter elemental iodine purification factor) = N/A

PF3M (Volume 3 recirc filter methyl iodine purification factor) = N/A

RV3 (Volume 3 air intake and exhaust leak rate , cfm) = 2530 cfm

PFIE (Volume 3 intake filter elemental iodine purification factor) = 0.894

PFIM (Volume 3 intake filter methyl iodine purification factor) = 0.889

CHIQ3 (Volume 3 X/Q's, sec/m^3) = 1.0 sec/m^3

Nine Mile Point Nuclear Station Unit: 2 Disposition: N/A

Originator/Date	Checker/Date	Calculation No.	Revision
G.J.Patel (NUCORE)/5-21-98	G.R.Stinson / 5-22-98	H21C-069	00

Ref.

Multipliers Cards

J (Interval No.)

DLEAK1 (Volume 1 leak rate multiplier)

DFIE (Volume 3 intake filter elemental purification factor multiplier)

DFIM (Volume 3 intake filter methyl purification factor multiplier)

DRV3 (Volume 3 air intake rate multiplier)

DEX3 (Volume 3 air exhaust rate multiplier)

W3 (Volume 3 atmospheric dispersion factor multiplier)

BRAT3 (Volumes 1, 2, & 3 breathing rate) = 3.47E-4 m^3/sec

T (Time at the end of the time interval) (hrs)

J =	1	2	3	4	5	6	7
DLEAK1=	0.00E+0	8.90E-6	8.90E-6	6.13E-5	6.18E-5	5.74E-5	4.30E-5
DFIE =	0.0	1.0	1.0	1.0	1.0	1.0	1.0
DFIM =	0.0	1.0	1.0	1.0	1.0	1.0	1.0
DRV3 =	0.0	1.0	1.0	1.0	1.0	1.0	1.0
DRX3 =	0.0	1.0	1.0	1.0	1.0	1.0	1.0
W3 =	0.00E+0	1.49E-4	1.49E-4	1.49E-4	1.10E-4	3.36E-5	8.55E-6
T =	0.25	2	7.73	8	24	96	720

Ref.

Direct Shine From Unit 2 Secondary Containment

The containment shine contribution to Control Room doses is calculated by first calculating the integrated 720 hour source term in the Secondary Containment. This is done by adding the integrated isotopic activities at different post-LOCA time intervals for containment & TIP leakage and ESF leakage as shown in Table 2. The integrated activities in Table 2 include the occupancy factors. The grand total of isotopic activities is input to RADIOISTOPE computer code (Ref. 3) and decayed for time t = 0 sec to convert into the units of MeV-hr/cc-sec).

The activity concentrations from DRAGON Run No. R0833812 05/17/98 and R0833814 05/17/98 in units of curie-hours/m^3 are summed in Table 3 on the following pages.

RADIOISOTOPE INPUT

The integrated concentrations presented on the following pages in Table 2 are input to the RADIOISOTOPE computer code for conversion into Mev-hr/cc-sec with zero decay time. A card image of RADIOISOTOPE Run No. 0833001, Job No. 6161, Dated 05/20/98 is given in APPENDIX A and the results are given below.

Energy (Mev)	Integrated Activity (Mev-hr/cc-sec)				
	2 hr	8 hr	24 hr	96 hr	720 hr
0.4	1.07E+04	1.39E+05	7.10E+05	1.61E+06	2.47E+06
0.8	5.65E+04	3.14E+05	8.67E+05	1.35E+06	1.49E+06
1.3	2.74E+04	1.84E+05	4.19E+05	4.57E+05	4.57E+05
1.7	2.05E+04	1.35E+05	3.01E+05	3.34E+05	3.34E+05
2.2	1.62E+04	7.80E+04	1.27E+05	1.31E+05	1.31E+05
2.5	2.01E+04	9.12E+04	1.23E+05	1.24E+05	1.24E+05
3.5	4.30E+02	5.33E+02	5.33E+02	5.33E+02	5.33E+02

Nine Mile Point Nuclear Station Unit: 2 Disposition: N/A

Originator/Date	Checker/Date	Calculation No.	Revision
G.J.Patel (NUCORE)/5-21-98	G.R.Stinson / 5-22-98	H21C-069	00

Ref.

Direct Shine From Unit 2 Secondary Containment

The containment shine contribution to Control Room doses is calculated by first calculating the integrated 720 hour source term in the Secondary Containment. This is done by adding the integrated isotopic activities at different post-LOCA time intervals for containment & TIP leakage and ESF leakage as shown in Table 2. The integrated activities in Table 2 include the occupancy factors. The grand total of isotopic activities is input to RADIOISTOPE computer code (Ref. 3) and decayed for time t = 0 sec to convert into the units of MeV-hr/cc-sec).

The activity concentrations from DRAGON Run No. R0833812 05/17/98 and R0833814 05/17/98 in units of curie-hours/m³ are summed in Table 3 on the following pages.

RADIOISOTOPE INPUT

The integrated concentrations presented on the following pages in Table 2 are input to the RADIOISOTOPE computer code for conversion into Mev-hr/cc-sec with zero decay time. A card image of RADIOISOTOPE Run No. 0833001, Job No. 6161, Dated 05/20/98 is given in APPENDIX A and the results are given below.

Energy (Mev)	Integrated Activity (Mev-hr/cc-sec)				
	2 hr	8 hr	24 hr	96 hr	720 hr
0.4	1.07E+04	1.39E+05	7.10E+05	1.61E+06	2.47E+06
0.8	5.65E+04	3.14E+05	8.67E+05	1.35E+06	1.49E+06
1.3	2.74E+04	1.84E+05	4.19E+05	4.57E+05	4.57E+05
1.7	2.05E+04	1.35E+05	3.01E+05	3.34E+05	3.34E+05
2.2	1.62E+04	7.80E+04	1.27E+05	1.31E+05	1.31E+05
2.5	2.01E+04	9.12E+04	1.23E+05	1.24E+05	1.24E+05
3.5	4.30E+02	5.33E+02	5.33E+02	5.33E+02	5.33E+02

Nine Mile Point Nuclear Station Unit: 2 Disposition: N/A

Originator/Date	Checker/Date	Calculation No.	Revision
G.J.Patel (NUCORE)/5-21-98	G.R.Stinson / 5-22-98	H21C-069	00

Ref.

TABLE 2

Nuclide	CONTAINMENT & TIP LEAKAGE ACTIVITY (Ci-HR/M³)					
	0-1 hr	1-2 hr	2-8 hr	8-24 hr	24-96 hr	96-720 hr
I129	2.40E-10	6.81E-10	1.07E-08	5.32E-08	2.78E-07	2.04E-06
I131	7.22E-03	2.05E-02	3.18E-01	1.51E+00	6.78E+00	1.83E+01
I132	8.69E-03	1.89E-02	1.04E-01	3.81E-02	4.03E-04	0.00E+00
I133	1.48E-02	4.08E-02	5.65E-01	1.96E+00	2.98E+00	2.89E-01
I134	1.00E-02	1.42E-02	2.30E-02	4.19E-04	1.84E-09	0.00E+00
I135	1.34E-02	3.46E-02	3.68E-01	6.33E-01	1.77E-01	9.27E-05
I136	1.57E-05	0.00E+00	0.00E+00	0.00E+00	0.00E+00	0.00E+00
Br83	7.08E-04	1.56E-03	8.89E-03	3.50E-03	4.42E-05	3.74E-14
Br84	6.73E-04	6.13E-04	4.10E-04	3.69E-07	4.39E-16	0.00E+00
Br85	1.78E-05	1.32E-10	1.19E-16	0.00E+00	0.00E+00	0.00E+00
Br87	3.17E-06	0.00E+00	0.00E+00	0.00E+00	0.00E+00	0.00E+00
Kr83m	2.20E-02	5.23E-02	3.67E-01	1.88E-01	3.03E-03	0.00E+00
Kr85m	4.88E-02	1.21E-01	1.08E+00	1.19E+00	1.36E-01	1.95E-06
Kr85	2.41E-03	6.84E-03	1.08E-01	5.34E-01	2.79E+00	2.04E+01
Kr87	7.29E-02	1.28E-01	3.62E-01	2.85E-02	6.49E-06	0.00E+00
Kr88	1.24E-01	2.84E-01	1.88E+00	1.03E+00	2.71E-02	0.00E+00
Kr89	2.16E-03	5.95E-08	0.00E+00	0.00E+00	0.00E+00	0.00E+00
Xe131m	1.26E-03	3.57E-03	5.64E-02	2.81E-01	1.54E+00	1.00E+01
Xe133m	1.83E-02	5.16E-02	7.88E-01	3.57E+00	1.27E+01	8.60E+00
Xe133	4.40E-01	1.25E+00	1.95E+01	9.40E+01	4.24E+02	8.18E+02
Xe135m	3.55E-02	4.68E-02	2.33E-01	2.63E-01	6.54E-02	3.45E-05
Xe135	6.57E-02	2.13E-01	4.44E+00	2.18E+01	2.23E+01	1.53E-01
Xe137	6.64E-03	1.44E-06	0.00E+00	0.00E+00	0.00E+00	0.00E+00
Xe138	6.79E-02	1.56E-02	1.48E-03	0.00E+00	0.00E+00	0.00E+00

DRAGON Run No. R0833812, Job No. 9498, Dated 05/17/98

Nine Mile Point Nuclear Station Unit: 2 Disposition: N/A

Originator/Date	Checker/Date	Calculation No.	Revision
G.J.Patel (NUCORE)/5-21-98	G.R.Stinson / 5-22-98	H21C-069	00

Ref.

TABLE 2 (Cont'd)

Nuclide	ESF LEAKAGE - 61 GPM ACTIVITY (Ci-HR/M3)					
	0-1 hr	1-2 hr	2-8 hr	8-24 hr	24-96 hr	96-720 hr
I129	2.30E-09	6.52E-09	1.02E-07	4.94E-07	2.30E-06	7.40E-06
I131	6.92E-02	1.96E-01	3.03E+00	1.41E+01	5.64E+01	8.61E+01
I132	8.33E-02	1.81E-01	9.94E-01	3.58E-01	3.65E-03	0.00E+00
I133	1.42E-01	3.90E-01	5.38E+00	1.82E+01	2.56E+01	1.99E+00
I134	9.61E-02	1.36E-01	2.19E-01	3.96E-03	1.67E-08	0.00E+00
I135	1.28E-01	3.31E-01	3.51E+00	5.92E+00	1.58E+00	6.73E-04
I136	1.50E-04	0.00E+00	0.00E+00	0.00E+00	0.00E+00	0.00E+00
Br83	6.79E-03	1.49E-02	8.47E-02	3.29E-02	4.00E-04	0.00E+00
Br84	6.46E-03	5.87E-03	3.91E-03	3.49E-06	0.00E+00	0.00E+00
Br85	1.70E-04	1.27E-09	0.00E+00	0.00E+00	0.00E+00	0.00E+00
Br87	3.05E-05	0.00E+00	0.00E+00	0.00E+00	0.00E+00	0.00E+00
Kr83m	1.61E-03	8.03E-03	1.19E-01	8.87E-02	1.56E-03	0.00E+00
Kr85m	1.69E-04	4.23E-04	3.75E-03	4.08E-03	4.45E-04	5.20E-09
Kr85	1.65E-10	1.09E-09	4.60E-08	3.64E-07	1.88E-06	6.04E-06
Kr87	2.56E-04	4.51E-04	1.26E-03	9.85E-05	2.16E-08	0.00E+00
Kr88	0.00E+00	0.00E+00	0.00E+00	0.00E+00	0.00E+00	0.00E+00
Kr89	0.00E+00	0.00E+00	0.00E+00	0.00E+00	0.00E+00	0.00E+00
Xe131m	1.23E-06	8.11E-06	4.41E-04	6.20E-03	8.94E-02	6.39E-01
Xe133m	3.61E-05	2.34E-04	1.17E-02	1.31E-01	8.29E-01	5.41E-01
Xe133	5.07E-04	3.30E-03	1.67E-01	1.97E+00	1.56E+01	2.31E+01
Xe135m	1.60E-02	5.18E-02	5.61E-01	9.47E-01	2.53E-01	1.08E-04
Xe135	6.07E-03	3.86E-02	1.49E+00	8.16E+00	7.17E+00	3.60E-02
Xe137	0.00E+00	0.00E+00	0.00E+00	0.00E+00	0.00E+00	0.00E+00
Xe138	0.00E+00	0.00E+00	0.00E+00	0.00E+00	0.00E+00	0.00E+00

DRAGON Run No. R0833814, Job No. 9501, Dated 05/17/98

Nine Mile Point Nuclear Station Unit: 2 Disposition: N/A

Originator/Date	Checker/Date	Calculation No.	Revision
G.J.Patel (NUCORE)/5-21-98	G.R.Stinson / 5-22-98	H21C-069	00

Ref.

TABLE 2 (Cont'd)

Nuclide	0-720 CONTAINMENT+TIP LEAKAGE ACTIVITY (Ci-HR/M3)				
	2 hr	8 hr	24 hr	96 hr *	720 hr **
I129	9.21E-10	1.16E-08	6.48E-08	2.32E-07	1.05E-06
I131	2.77E-02	3.46E-01	1.86E+00	5.92E+00	1.32E+01
I132	2.76E-02	1.32E-01	1.70E-01	1.70E-01	1.70E-01
I133	5.56E-02	6.21E-01	2.58E+00	4.37E+00	4.48E+00
I134	2.42E-02	4.72E-02	4.76E-02	4.76E-02	4.76E-02
I135	4.80E-02	4.16E-01	1.05E+00	1.16E+00	1.16E+00
I136	1.57E-05	1.57E-05	1.57E-05	1.57E-05	1.57E-05
Br83	2.27E-03	1.12E-02	1.47E-02	1.47E-02	1.47E-02
Br84	1.29E-03	1.70E-03	1.70E-03	1.70E-03	1.70E-03
Br85	1.78E-05	1.78E-05	1.78E-05	1.78E-05	1.78E-05
Br87	3.17E-06	3.17E-06	3.17E-06	3.17E-06	3.17E-06
Kr83m	7.43E-02	4.41E-01	6.29E-01	6.31E-01	6.31E-01
Kr85m	1.70E-01	1.25E+00	2.44E+00	2.52E+00	2.52E+00
Kr85	9.25E-03	1.17E-01	6.51E-01	2.33E+00	1.05E+01
Kr87	2.01E-01	5.63E-01	5.91E-01	5.91E-01	5.91E-01
Kr88	4.08E-01	2.29E+00	3.32E+00	3.33E+00	3.33E+00
Kr89	2.16E-03	2.16E-03	2.16E-03	2.16E-03	2.16E-03
Xe131m	4.83E-03	6.12E-02	3.42E-01	1.27E+00	5.27E+00
Xe133m	6.99E-02	8.58E-01	4.43E+00	1.20E+01	1.55E+01
Xe133	1.69E+00	2.12E+01	1.15E+02	3.70E+02	6.97E+02
Xe135m	8.23E-02	3.15E-01	5.78E-01	6.18E-01	6.18E-01
Xe135	2.79E-01	4.72E+00	2.65E+01	3.99E+01	4.00E+01
Xe137	6.64E-03	6.64E-03	6.64E-03	6.64E-03	6.64E-03
Xe138	8.35E-02	8.50E-02	8.50E-02	8.50E-02	8.50E-02

* Includes occupancy factor of 0.60

** Includes occupancy factor of 0.40

Nine Mile Point Nuclear Station Unit: 2 Disposition: N/A

Originator/Date	Checker/Date	Calculation No.	Revision
G.J.Patel (NUCORE)/5-21-98	G.R.Stinson / 5-22-98	H21C-069	00

Ref.

TABLE 2 (Cont'd)

Nuclide	0-720 ESF LEAKAGE ACTIVITY (Ci-HR/M³)				
	2 hr	8 hr	24 hr	96 hr*	720 hr **
I129	8.82E-09	1.11E-07	6.05E-07	1.98E-06	4.94E-06
I131	2.65E-01	3.30E+00	1.74E+01	5.12E+01	8.57E+01
I132	2.64E-01	1.26E+00	1.62E+00	1.62E+00	1.62E+00
I133	5.32E-01	5.91E+00	2.41E+01	3.95E+01	4.03E+01
I134	2.32E-01	4.51E-01	4.55E-01	4.55E-01	4.55E-01
I135	4.59E-01	3.97E+00	9.89E+00	1.08E+01	1.08E+01
I136	1.50E-04	1.50E-04	1.50E-04	1.50E-04	1.50E-04
Br83	2.17E-02	1.06E-01	1.39E-01	1.40E-01	1.40E-01
Br84	1.23E-02	1.62E-02	1.62E-02	1.62E-02	1.62E-02
Br85	1.70E-04	1.70E-04	1.70E-04	1.70E-04	1.70E-04
Br87	3.05E-05	3.05E-05	3.05E-05	3.05E-05	3.05E-05
Kr83m	9.64E-03	1.29E-01	2.17E-01	2.18E-01	2.18E-01
Kr85m	5.92E-04	4.34E-03	8.42E-03	8.69E-03	8.69E-03
Kr85	1.26E-09	4.73E-08	4.11E-07	1.54E-06	3.96E-06
Kr87	7.07E-04	1.97E-03	2.07E-03	2.07E-03	2.07E-03
Kr88	0.00E+00	0.00E+00	0.00E+00	0.00E+00	0.00E+00
Kr89	0.00E+00	0.00E+00	0.00E+00	0.00E+00	0.00E+00
Xe131m	9.34E-06	4.50E-04	6.65E-03	6.03E-02	3.16E-01
Xe133m	2.70E-04	1.20E-02	1.43E-01	6.40E-01	8.57E-01
Xe133	3.81E-03	1.71E-01	2.14E+00	1.15E+01	2.07E+01
Xe135m	6.78E-02	6.29E-01	1.58E+00	1.73E+00	1.73E+00
Xe135	4.47E-02	1.53E+00	9.69E+00	1.40E+01	1.40E+01
Xe137	0.00E+00	0.00E+00	0.00E+00	0.00E+00	0.00E+00
Xe138	0.00E+00	0.00E+00	0.00E+00	0.00E+00	0.00E+00

* Includes occupancy factor of 0.60

** Includes occupancy factor of 0.40

Nine Mile Point Nuclear Station Unit: 2 Disposition: N/A

Originator/Date	Checker/Date	Calculation No.	Revision
G.J.Patel (NUCORE)/5-21-98	G.R.Stinson / 5-22-98	H21C-069	00

Ref.

TABLE 2 (Cont'd)

Nuclide	TOTAL SC ACTIVITY ACTIVITY (Ci-HR/M3)				
	2 hr	8 hr	24 hr	96 hr*	720 hr **
I129	9.74E-09	1.22E-07	6.70E-07	2.22E-06	5.99E-06
I131	2.93E-01	3.64E+00	1.93E+01	5.72E+01	9.89E+01
I132	2.92E-01	1.39E+00	1.79E+00	1.79E+00	1.79E+00
I133	5.88E-01	6.53E+00	2.67E+01	4.38E+01	4.48E+01
I134	2.56E-01	4.98E-01	5.03E-01	5.03E-01	5.03E-01
I135	5.07E-01	4.39E+00	1.09E+01	1.20E+01	1.20E+01
I136	1.66E-04	1.66E-04	1.66E-04	1.66E-04	1.66E-04
Br83	2.40E-02	1.18E-01	1.54E-01	1.54E-01	1.54E-01
Br84	1.36E-02	1.79E-02	1.79E-02	1.79E-02	1.79E-02
Br85	1.88E-04	1.88E-04	1.88E-04	1.88E-04	1.88E-04
Br87	3.37E-05	3.37E-05	3.37E-05	3.37E-05	3.37E-05
Kr83m	8.39E-02	5.70E-01	8.47E-01	8.49E-01	8.49E-01
Kr85m	1.70E-01	1.25E+00	2.45E+00	2.53E+00	2.53E+00
Kr85	9.25E-03	1.17E-01	6.51E-01	2.33E+00	1.05E+01
Kr87	2.02E-01	5.65E-01	5.93E-01	5.93E-01	5.93E-01
Kr88	4.08E-01	2.29E+00	3.32E+00	3.33E+00	3.33E+00
Kr89	2.16E-03	2.16E-03	2.16E-03	2.16E-03	2.16E-03
Xe131m	4.84E-03	6.17E-02	3.49E-01	1.33E+00	5.58E+00
Xe133m	7.02E-02	8.70E-01	4.57E+00	1.27E+01	1.63E+01
Xe133	1.69E+00	2.14E+01	1.17E+02	3.81E+02	7.18E+02
Xe135m	1.50E-01	9.44E-01	2.15E+00	2.35E+00	2.35E+00
Xe135	3.23E-01	6.25E+00	3.62E+01	5.39E+01	5.40E+01
Xe137	6.64E-03	6.64E-03	6.64E-03	6.64E-03	6.64E-03
Xe138	8.35E-02	8.50E-02	8.50E-02	8.50E-02	8.50E-02

* Includes occupancy factor of 0.60

** Includes occupancy factor of 0.40

Ref.

QADMOD INPUT

Unit 1 Control Room:

The unit control room is located SW of Unit 2 reactor building (Refs. 37 & 38.). The distances between the center line of the Unit 2 reactor bldg and Unit 1 CR concrete walls are calculated based on information given in References 38 & 40. The Unit 1 CR is analyzed for the occupancy at EL 277'-0" where the major components (control console, computers & bench boards) are located. (Ref. 40). The Unit 1 CR concrete shieldings are as follows:

North wall	12" concrete (Ref. 40)
East Wall*	8" concrete block (Ref.s 39f & 40)
South Wall	8" concrete block (Ref. 40)
West wall	12" concrete (Ref. 40)
Roof	8" concrete (Refs 40.e. f & g).

* Concrete blocks are 75% solid corresponding to equivalent concrete thickness of 75% (i.e., 0.75% x 8" = 6" of concrete).

Unit 2 Reactor Building:

The post-LOCA airborne activity resulting from the Containment & TIP leakage and ESF leakage is modeled in the area between ELs 386'-10" and 426'-3" (Ref. 43). The reactor building walls located above the 386'-10" elevation are sheet metal (Ref. 47) and assumed to provide no shielding (Ref. 43.c). Thus, the thickness of these surfaces is neglected in the QADMOD geometry model. The secondary containment airborne source term located above 386'-10" is modeled as a right circular cylinder. The QADMOD shielding model is developed based the shielding associated with Unit 1 CR and the source term developed in the previous section of this calculation. The dose points are placed in the CR based on the most occupied locations and closer to the east wall (see Figure 1).

Dimensions:

The dimensions shown below were taken from REFERENCES 38, 40, & 42. These dimensions are used in determining the boundaries that define the geometry model for QADMOD.

1. Distance from the center line of Unit 2 Reactor Bldg

   CR East Wall
   (531'-6") + (140'-0") = 671'-6" (Refs 38.a & 39.b)

   North Wall
   (67'- 6") - (2'-6") -(7"-6") = 57'-0" (Refs. 38.a & 40.a)

Ref.

2 Elevations:

Top of RB Concrete wall	386'-10" (Ref. 43.c)
Reactor Bldg Roof	426'-3" (Ref. 43.c)
Control Room Roof	300'-0" (Ref 37.b)
Control Room Floor	277'-0" (Refs. 37.a,40.a, b,& d)

3. Control Room Shield Thicknesses:

North wall	12" concrete (Ref. 40)
East Wall*	8" concrete block (Ref.s 39f & 40)
South Wall	8" concrete block (Ref. 40)
West wall	12" concrete (Ref. 40)
Roof	8" concrete (Refs 40.e, f, & g).

* Concrete blocks are 75% solid corresponding to equivalent concrete thickness of 75% (i.e., 0.75% x 8" = 6" of concrete).

Source Volume:

Radioactive source volume is calculated as follows:

Radius of RB sheet metal wall = R = 88'-0" (Ref. 47)
Outer radius of RB concrete wall = (83'-0") + (2'-6") = 85'-6" (Ref. 43.a)
Height of source = H = (426'-3") - (386'-10") = 39'-5" (Ref. 43.c)

Volume = $\Pi R^2 H = \Pi * (88)^2 * 39.417 = 958{,}956\ ft^3 \times 7.481\ gal/ft^3 \times 3785\ cc/gal$
$= 2.72E+10$ cc

Boundary and Region Definition:

Origin is assumed to be reactor center line at elevation 386'-10"'

Boundary #	Type	Dimension
1	cyl	inner radius of reactor building center x=0, y=0, z=0, r=83'-0" = 2,529.8 cm
2	cyl	outer radius of reactor building center x=0, y=0, z=0, r=85.5' = 2,606.0 cm
3	plane	top of RB roof @ EL 426'-3"' z = 1,201.50 cm
4	plane	top of RB concrete wall @ EL 386'-10" z = 0.0 cm
5	plane	top of CR roof @ EL 300'-0" z = -2,646.68 cm
6	plane	bottom of CR roof @ EL 299'-4" z = -2,667.00 cm
7	plane	outer surface of CR east wall x = 20,467.32 cm (671'-6")
8	plane	inner surface of CR east wall x = 20,482.56 cm (672'-0")
9	plane	outer surface of CR north wall y = 1,737.36 cm (57'-0")
10	plane	inner surface of CR north wall y = 1,767.84 cm (58'-0")

Ref.

Region #	Material	Description
1	air	air above EL 386'-10"
2	concrete	RB concrete wall
3	air	air below EL 386'-10"
4	air	air region between RB and east wall of CR
5	air	air region above the CR
6	concrete	CR roof
7	concrete	CR east wall
8	concrete	CR north wall
9	air	air region inside CR
10	air	air region adjacent to CR north wall

QADMOD RESULTS

The specific activity in seven energy groups from RADIOISOTOPE and the geometry model shown in Figure 1 are input to the QADMOD computer code (Ref. 2) to calculate the 30 day integrated gamma due to the direct shine of the Unit 2 secondary containment.

The card images of input to QADMOD is shown in APPENDIX A, and the dose results are presented in Table 6.

JOBs # 8174 dated 05/21/98 calculates the 30 day gamma dose to the control room operator.

The QADMOD output normally identifies its final results as dose rates in units of mRem per hour. Because the activity input to QADMOD was based on 30 day integrated concentrations in the secondary containment (Ci-hr/m^3), the QADMOD results are actually 30-day integrated doses in units of mRem.

The highest dose of 5.03 Rem occurs at receptor Detector location Det 1 at the north-east corner of the CR. This whole body gamma dose includes the occupancy factor mentioned in Reference 8. The integrated whole body gamma doses at different time intervals are listed in the following table and the QADMOD shielding model is shown in Figure 1.

Nine Mile Point Nuclear Station Unit: 2 Disposition: N/A

Originator/Date	Checker/Date	Calculation No.	Revision
G.J.Patel (NUCORE)/5-21-98	G.R.Stinson / 5-22-98	H21C-069	00

Ref.

The whole body gamma dose in the Unit 1 CR due to a LOCA at Unit 2 are listed in the following Table:

Post-LOCA Time (Hr)	Whole Body Gamma Dose (Rem)*
0	0
2	0.186
8	1.12
24	2.82
96	4.18
720	5.03

* From QADMOD Run No. 0833001, Job No. 8174, Dated 5/21/98

NIAGARA MOHAWK NUCLEAR ENGINEERING	CALCULATION CONTINUATION SHEET	Page 69 (Next ____)

Nine Mile Point Nuclear Station Unit: 2 Disposition: N/A

Originator/Date	Checker/Date	Calculation No.	Revision
G.J.Patel (NUCORE)/5-21-98	G.R.Stinson / 5-22-98	H21C-069	00

Ref.

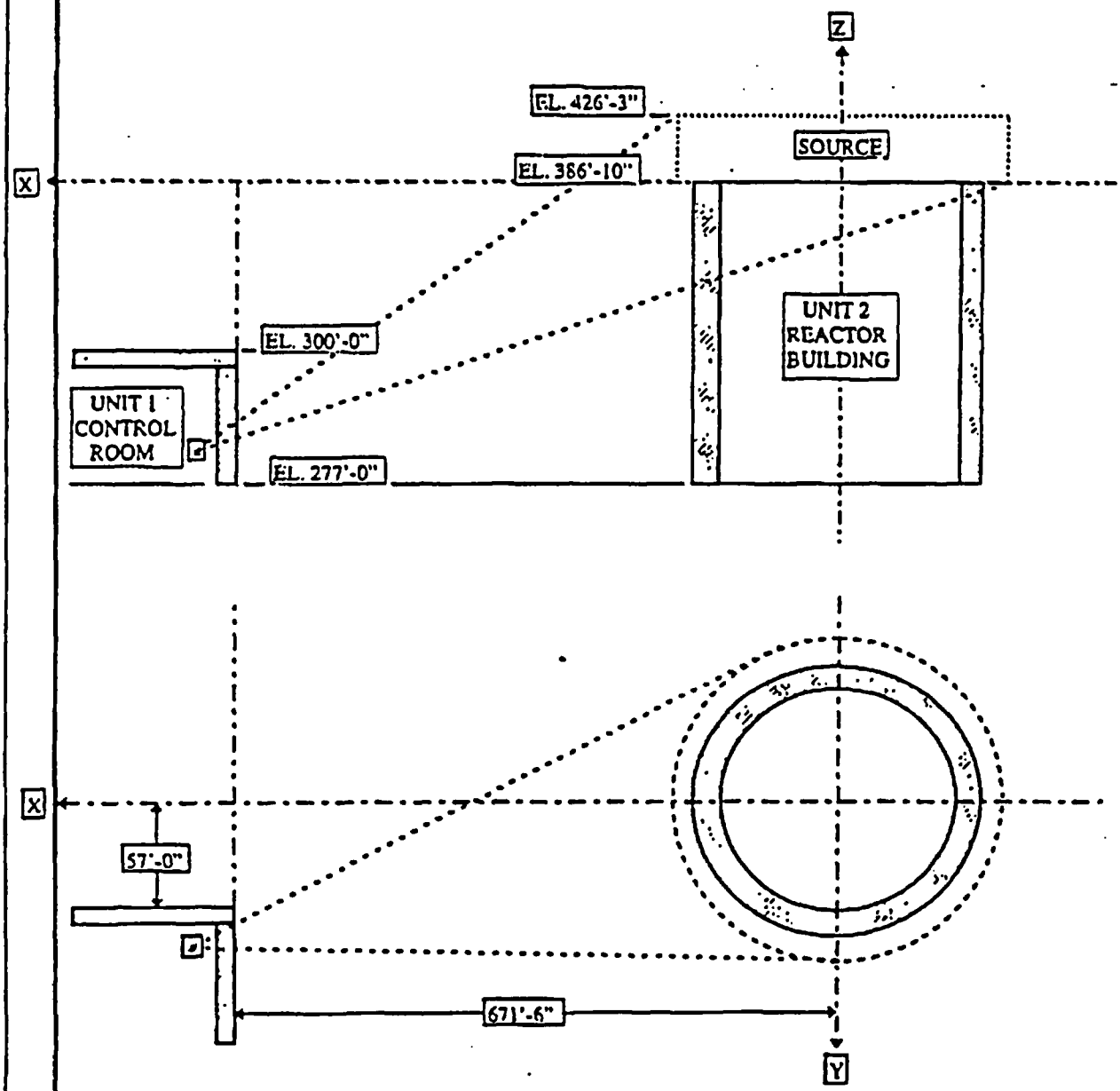

Figure 1 (Shielding Model)

Ref.

Direct Shine From Unit 1 CR Filter

As halogens build up on the Control Room filter, the filter becomes a gamma radiation source and a dose rate concern for the CR operator. At NMP-1, the Control Room intake filter is located directly above the Control Room at EL 300'-0" (Refs 40 & 44). The CR operating floor is located at EL 277'-0" (Refs. 40a & 40b). Therefore, the receptor location would be at 6' above the operating floor, i.e., at EL 283'0" (277'-0" + 6'-0" = 283'-0"). The charcoal filter is placed on a 6" steel channel above the CR roof at EL 300'-0" (Refs. 40, 44, & 45). The thickness of the concrete roof above the CR is 8" (Refs 40e, 40f, & 40g). The filter is modeled as a point source. The post-LOCA halogen integrated isotopic activities (Ci-hrs) on the CR filter from all radioactive sources are given in Table 3 for the various time periods. The total integrated halogen isotopic activities are then converted to units of Mev-hr/sec using the RADIOISOTOPE computer code (Ref 3) and input to QADMOD computer code to calculate the total filter shine dose in the CR. Using the units of (MeV-hr/sec) as nput to QADMOD results in the output of QADMOD being in mRem rather than the normal mRem/hr.

RADIOISOTOPE INPUT

The integrated isotopic activities presented in Table 3 are input to the RADIOISOTOPE computer code for conversion into Mev-hr/sec with zero decay time. A card image of RADIOISOTOPE Job No. 9825, Dated 05/17/98 is given in APPENDIX A and the results are shown below.

Energy (MeV)	Integrated Activity (MeV-hr)/(sec)
0.4	8.87E+11
0.8	4.39E+11
1.3	6.39E+10
1.7	4.49E+10
2.2	7.26E+09
2.5	4.83E+08
3.5	9.14E+07

Ref.

QADMOD INPUT

1. The primary CR filter shine dose contributor to Unit 1 Control Room is the post-LOCA halogens accumulated on the CR filter located at EL 300'-0". The 8" concrete ceiling at EL 300'-0" above the control room is the only shielding between the CR operator and filter source (Ref. 40). Thus, 8" thickness of concrete floor is input in the QADMOD geometry model.

2. The CR filter is modeled as a point source due to its smaller size with respect to its distance from the receptor.

3. The receptor is located at right below the source point and 6 feet above the floor at EL 277'-0"

Dimensions:

The following dimensions are taken from REFERENCE 40 and utilized in determining the boundaries and regions that define the geometry model for QADMOD.

1. Elevations

CR Floor	277'-0"
CR Roof	300'-0"
CR Filter Housing Pad	6"

3. Shield thicknesses

Control building roof	8.0" concrete

Boundary and Region Definition:

Origin is assumed to be at 6" off the CR ceiling at EL 300'-0" where bottom part of filter is located on 6" steel channel pad.

Boundary #	Type	Dimension
1	plane	space above the CR roof, x = -500 cm
2	plane	top of CR roof at EL 300'-0", x = 15.2 cm (6" below the origin)
3	plane	bottom of CR roof at EL 300'-0", x = 35.56 cm
4	plane	CR floor at EL 277'-0", x = 716.28 cm

Region #	Material	Description
1	air	source region above el 300'-0"
2	concrete	concrete ceiling above CR at EL 300'-0"
3	air	CR space above EL 277'-0"

NIAGARA MOHAWK NUCLEAR ENGINEERING	CALCULATION CONTINUATION SHEET	Page 72 (Next ____)

Nine Mile Point Nuclear Station Unit: 2 Disposition: N/A

Originator/Date	Checker/Date	Calculation No.	Revision
G.J.Patel (NUCORE)/5-21-98	G.R.Stinson / 5-22-98	H21C-069	00

Ref.

Sketches:

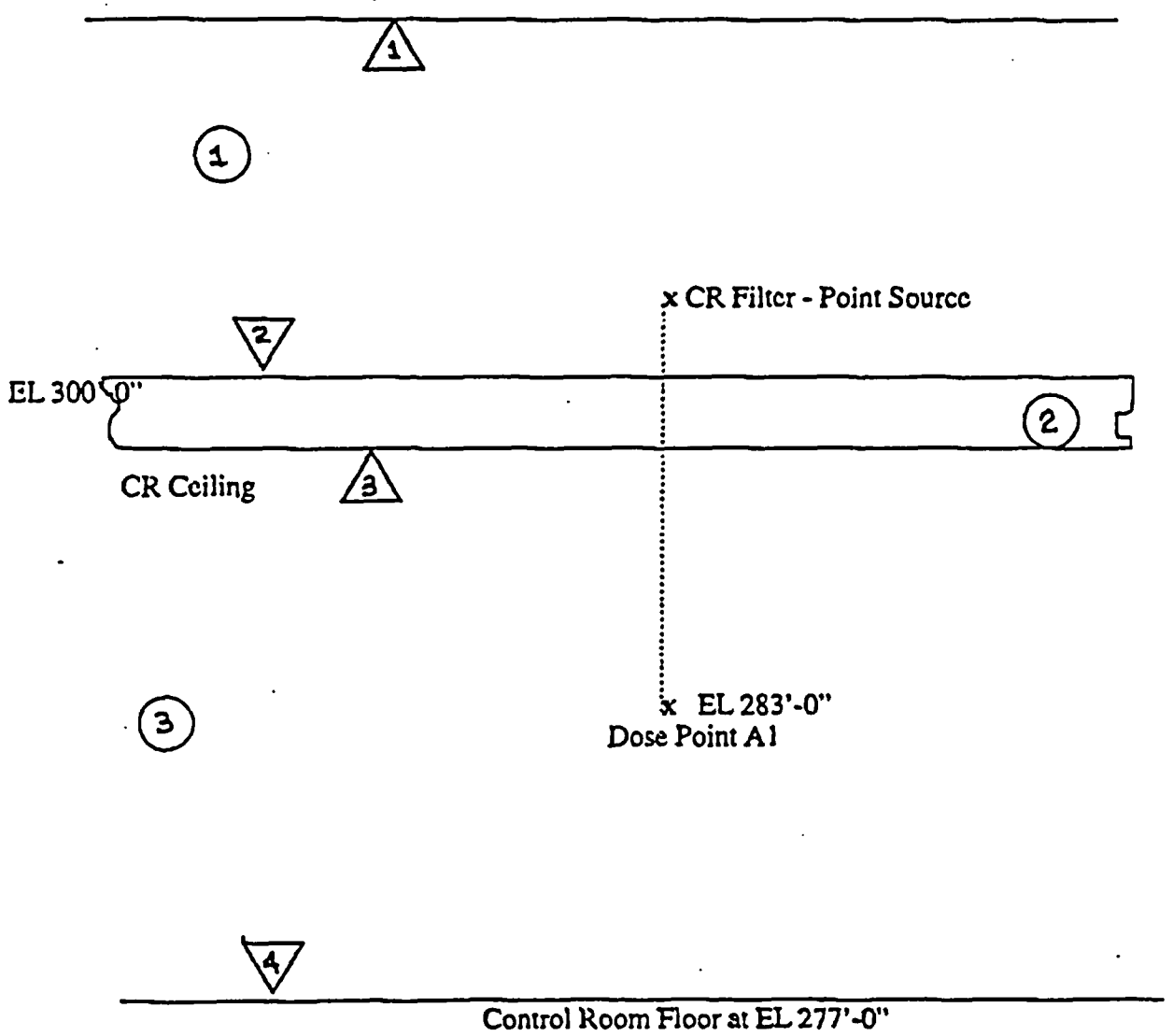

Ref.

QADMOD RESULTS

The specific activity in seven energy groups from RADIOISOTOPE, and the geometry model shown on the previous pages is input to the QADMOD computer code (Ref. 2) to calculate the 30 day integrated gamma dose from direct shine of the CR filter.

The card images of input to QADMOD is shown in APPENDIX A, and the dose results are presented in Table 8.

QADMOD Run No. R0833001, JOB # 8601 dated 05/21/98 calculate the 30 day gamma dose to the control room.

The QADMOD output identifies its final results as dose rates in units of mRem per hour. Because the activity input to QADMOD was based on 30 day integrated activity in the CR Filter, the QADMOD result is actually 30-day integrated doses in units of mRem.

The dose at right below the source point is 1.41E-01 Rem. This 30 day dose includes the adjustment for control room occupancy through the X/Q's used in the DRAGON runs which provide the halogen activities on the CR filter.

Nine Mile Point Nuclear Station Unit: 2 Disposition: N/A

Originator/Date	Checker/Date	Calculation No.	Revision
G.J.Patel (NUCORE)/5-21-98	G.R.Stinson / 5-22-98	H21C-069	00

Ref.

TABLE 3

INTEGRATED HALOGEN ACTIVITY ON CONTROL ROOM FILTER (0-720 HR)

CONTAINMENT & TIP LEAKAGE 0-1HR (CI-HRS)

ISOTOPE	0-1 hr	1-8 hr	8-24 hr	24-96 hr	96-720 hr	Total
I-129	0.00E+00	1.20E-09	2.75E-09	1.24E-08	1.07E-07	1.23E-07
I-131	1.56E-03	3.57E-02	7.84E-02	3.02E-01	9.14E-01	1.33E+00
I-132	1.81E-03	1.64E-02	2.24E-03	1.82E-05	0.00E+00	2.05E-02
I-133	3.18E-03	6.53E-02	1.03E-01	1.33E-01	1.32E-02	3.18E-01
I-134	1.96E-03	6.80E-03	2.67E-05	0.00E+00	0.00E+00	8.79E-03
I-135	2.85E-03	4.59E-02	3.45E-02	7.92E-03	4.20E-06	9.12E-02
I-136	1.84E-09	0.00E+00	0.00E+00	0.00E+00	0.00E+00	1.84E-09
BR-83	1.48E-04	1.37E-03	2.06E-04	2.00E-06	0.00E+00	1.73E-03
BR-84	1.22E-04	2.26E-04	2.41E-08	0.00E+00	0.00E+00	3.48E-04
BR-85	1.14E-07	0.00E+00	0.00E+00	0.00E+00	0.00E+00	1.14E-07
BR-87	0.00E+00	0.00E+00	0.00E+00	0.00E+00	0.00E+00	0.00E+00
TOTAL	1.16E-02	1.72E-01	2.18E-01	4.43E-01	9.27E-01	1.77E+00

DRAGON RUN # R0833811, JOB # 9497, 05/17/98

CONTAINMENT & TIP LEAKAGE 1-720HR (CI-HRS)

ISOTOPE	1-2 hr	2-8 hr	8-24 hr	24-96 hr	96-720 hr	Total
I-129	0.00E+00	2.54E-10	1.47E-09	6.65E-09	5.86E-08	6.70E-08
I-131	7.40E-05	7.49E-03	4.20E-02	1.62E-01	4.97E-01	7.09E-01
I-132	6.57E-05	2.02E-03	1.20E-03	9.77E-06	0.00E+00	3.30E-03
I-133	1.47E-04	1.31E-02	5.51E-02	7.13E-02	7.15E-03	1.47E-01
I-134	4.59E-05	3.18E-04	1.43E-05	0.00E+00	0.00E+00	3.78E-04
I-135	1.24E-04	8.15E-03	1.84E-02	4.25E-03	2.27E-06	3.09E-02
I-136	0.00E+00	0.00E+00	0.00E+00	0.00E+00	0.00E+00	0.00E+00
BR-83	5.42E-06	1.73E-04	1.10E-04	1.07E-06	0.00E+00	2.89E-04
BR-84	1.82E-06	4.46E-06	1.29E-08	0.00E+00	0.00E+00	6.29E-06
BR-85	0.00E+00	0.00E+00	0.00E+00	0.00E+00	0.00E+00	0.00E+00
BR-87	0.00E+00	0.00E+00	0.00E+00	0.00E+00	0.00E+00	0.00E+00
TOTAL	4.64E-04	3.13E-02	1.17E-01	2.38E-01	5.04E-01	8.90E-01

DRAGON RUN # R0833812, JOB # 9498, 05/17/98

INTEGRATED HALOGEN ACTIVITY ON CONTROL ROOM FILTER (0-720 HR)

ESF LEAKAGE 0-1HR (CI-HRS)

ISOTOPE	0-1 hr	1-8 hr	8-24 hr	24-96 hr	96-720 hr	Total
I-129	4.98E-10	1.15E-08	2.64E-08	1.19E-07	1.03E-06	1.19E-06
I-131	1.50E-02	3.43E-01	7.52E-01	2.90E+00	8.78E+00	1.28E+01
I-132	1.74E-02	1.57E-01	2.15E-02	1.75E-04	0.00E+00	1.96E-01
I-133	3.05E-02	6.27E-01	9.87E-01	1.27E+00	1.27E-01	3.04E+00
I-134	1.88E-02	6.53E-02	2.56E-04	8.04E-10	0.00E+00	8.44E-02
I-135	2.74E-02	4.40E-01	3.31E-01	7.61E-02	4.03E-05	8.75E-01
I-136	1.76E-08	0.00E+00	0.00E+00	0.00E+00	0.00E+00	1.76E-08
BR-83	1.42E-03	1.32E-02	1.97E-03	1.92E-05	0.00E+00	1.66E-02
BR-84	1.17E-03	2.17E-03	2.31E-07	0.00E+00	0.00E+00	3.34E-03
BR-85	1.10E-06	4.34E-10	0.00E+00	0.00E+00	0.00E+00	1.10E-06
BR-87	8.96E-11	0.00E+00	0.00E+00	0.00E+00	0.00E+00	8.96E-11
TOTAL	1.12E-01	1.65E+00	2.09E+00	4.25E+00	8.91E+00	1.70E+01

DRAGON RUN # R0833813, JOB # 9563, 05/17/98

Nine Mile Point Nuclear Station Unit: 2 Disposition: N/A

Originator/Date	Checker/Date	Calculation No.	Revision
G.J.Patel (NUCORE)/5-21-98	G.R.Stinson / 5-22-98	H21C-069	00

Ref.

TABLE 3 (Cont'd)

INTEGRATED HALOGEN ACTIVITY ON CONTROL ROOM FILTER (0-720 HR)						
ESF LEAKAGE 1-720HR (CI-HRS)						
ISOTOPE	0-2 hr	1-8 hr	8-24 hr	24-96 hr	96-720 hr	Total
I-129	0.00E+00	2.42E-09	1.40E-08	6.34E-08	5.54E-07	6.34E-07
I-131	7.10E-04	7.15E-02	4.00E-01	1.55E+00	4.72E+00	6.74E+00
I-132	6.30E-04	1.93E-02	1.14E-02	9.31E-05	0.00E+00	3.14E-02
I-133	1.41E-03	1.25E-01	5.25E-01	6.79E-01	6.80E-02	1.40E+00
I-134	4.40E-04	3.04E-03	1.36E-04	4.28E-10	0.00E+00	3.62E-03
I-135	1.19E-03	7.78E-02	1.76E-01	4.05E-02	2.16E-05	2.96E-01
I-136	0.00E+00	0.00E+00	0.00E+00	0.00E+00	0.00E+00	0.00E+00
BR-83	5.19E-05	1.65E-03	1.05E-03	1.02E-05	0.00E+00	2.76E-03
BR-84	1.75E-05	4.28E-05	1.23E-07	0.00E+00	0.00E+00	6.04E-05
BR-85	0.00E+00	0.00E+00	0.00E+00	0.00E+00	0.00E+00	0.00E+00
BR-87	0.00E+00	0.00E+00	0.00E+00	0.00E+00	0.00E+00	0.00E+00
TOTAL	4.45E-03	2.98E-01	1.11E+00	2.27E+00	4.79E+00	8.47E+00
DRAGON RUN # R0833814, JOB # 9501, 05/17/98						
BYPASS LEAKAGE 0-6.86 HR (CI-HRS)						
ISOTOPE	0-6.86 hr	6.86-8 hr	8-24 hr	24-96 hr	96-720 hr	Total
I-129	0.00E+00	0.00E+00	2.70E-10	1.21E-09	1.05E-08	1.20E-08
I-131	1.66E-03	3.66E-04	7.70E-03	2.97E-02	8.98E-02	1.29E-01
I-132	6.81E-04	9.10E-05	2.20E-04	1.97E-06	0.00E+00	9.94E-04
I-133	3.01E-03	9.46E-04	1.01E-02	1.30E-02	1.30E-03	2.84E-02
I-134	2.24E-04	3.85E-06	2.62E-06	0.00E+00	0.00E+00	2.30E-04
I-135	2.07E-03	5.28E-04	3.38E-03	7.78E-04	4.13E-07	6.76E-03
I-136	0.00E+00	0.00E+00	0.00E+00	0.00E+00	0.00E+00	0.00E+00
BR-83	5.75E-05	7.99E-06	2.02E-05	1.96E-07	0.00E+00	8.59E-05
BR-84	6.85E-06	8.14E-09	2.37E-09	0.00E+00	0.00E+00	6.86E-06
BR-85	2.46E-09	0.00E+00	0.00E+00	0.00E+00	0.00E+00	2.46E-09
BR-87	0.00E+00	0.00E+00	0.00E+00	0.00E+00	0.00E+00	0.00E+00
TOTAL	7.71E-03	2.14E-03	2.14E-02	4.35E-02	9.11E-02	1.66E-01
DRAGON RUN # R0833817, JOB # 9564, 05/17/98						
BYPASS LEAKAGE 6.86-8.0 HR (CI-HRS)						
ISOTOPE	0-6.86 hr	6.86-8 hr	8-24 hr	24-96 hr	96-720 hr	Total
I-129	0.00E+00	0.00E+00	1.47E-10	6.62E-10	5.73E-09	6.54E-09
I-131	0.00E+00	1.54E-04	4.19E-03	1.61E-02	4.89E-02	6.93E-02
I-132	0.00E+00	2.34E-05	1.20E-04	9.74E-07	0.00E+00	1.44E-04
I-133	0.00E+00	2.56E-04	5.50E-03	7.09E-03	7.08E-04	1.36E-02
I-134	0.00E+00	8.92E-07	1.43E-06	0.00E+00	0.00E+00	2.32E-06
I-135	0.00E+00	1.41E-04	1.84E-03	4.24E-04	2.25E-07	2.41E-03
I-136	0.00E+00	0.00E+00	0.00E+00	0.00E+00	0.00E+00	0.00E+00
BR-83	0.00E+00	2.06E-06	1.10E-05	1.07E-07	0.00E+00	1.32E-05
BR-84	0.00E+00	1.68E-09	1.29E-09	0.00E+00	0.00E+00	2.97E-09
BR-85	0.00E+00	4.34E-10	0.00E+00	0.00E+00	0.00E+00	4.34E-10
BR-87	0.00E+00	0.00E+00	0.00E+00	0.00E+00	0.00E+00	0.00E+00
TOTAL	0.00E+00	5.77E-04	1.17E-02	2.36E-02	4.96E-02	8.55E-02
DRAGON RUN # R0833818, JOB # 9563, 05/17/98						

Nine Mile Point Nuclear Station Unit: 2 Disposition: N/A

Originator/Date	Checker/Date	Calculation No.	Revision
G.J.Patel (NUCORE)/5-21-98	G.R.Stinson / 5-22-98	H21C-069	00

Ref.

TABLE 3 (Cont'd)

INTEGRATED HALOGEN ACTIVITY ON CONTROL ROOM FILTER (0-720 HR)						
BYPASS LEAKAGE 8.0-9.61 HR (CI-HRS)						
ISOTOPE	0-9.61 hr	9.61-24	24-96 hr	96-720 hr	Total	
I-129	0.00E+00	1.35E-10	6.74E-10	5.84E-09	6.65E-09	
I-131	2.20E-04	3.83E-03	1.64E-02	4.98E-02	7.03E-02	
I-132	2.18E-05	7.48E-05	9.92E-07	0.00E+00	9.76E-05	
I-133	3.51E-04	4.89E-03	7.23E-03	7.21E-04	1.32E-02	
I-134	4.16E-07	4.06E-07	0.00E+00	0.00E+00	8.22E-07	
I-135	1.74E-04	1.52E-03	4.32E-04	2.29E-07	2.13E-03	
I-136	0.00E+00	0.00E+00	0.00E+00	0.00E+00	0.00E+00	
BR-83	1.95E-06	6.98E-06	1.09E-07	0.00E+00	9.04E-06	
BR-84	3.88E-10	1.60E-10	0.00E+00	0.00E+00	5.48E-10	
BR-85	0.00E+00	0.00E+00	0.00E+00	0.00E+00	0.00E+00	
BR-87	0.00E+00	0.00E+00	0.00E+00	0.00E+00	0.00E+00	
TOTAL	7.69E-04	1.03E-02	2.41E-02	5.05E-02	8.57E-02	
DRAGON RUN # R0833819, JOB # 9513, 05/17/98						
BYPASS LEAKAGE 9.61-13.09 HR (CI-HRS)						
ISOTOPE	0-9.61 hr	9.61-13.09 hr	13.09-24 hr	24-96 hr	96-720 hr	Total
I-129	0.00E+00	1.96E-10	1.23E-09	8.09E-09	7.01E-08	7.96E-08
I-131	0.00E+00	5.66E-03	3.46E-02	1.98E-01	5.98E-01	8.36E-01
I-132	0.00E+00	2.45E-04	3.07E-04	1.19E-05	0.00E+00	5.64E-04
I-133	0.00E+00	8.28E-03	4.19E-02	8.68E-02	8.66E-03	1.46E-01
I-134	0.00E+00	1.35E-06	3.10E-07	0.00E+00	0.00E+00	1.66E-06
I-135	0.00E+00	3.36E-03	1.11E-02	5.18E-03	2.75E-06	1.96E-02
I-136	0.00E+00	0.00E+00	0.00E+00	0.00E+00	0.00E+00	0.00E+00
BR-83	0.00E+00	2.26E-05	2.97E-05	1.31E-06	0.00E+00	5.36E-05
BR-84	0.00E+00	3.98E-10	0.00E+00	0.00E+00	0.00E+00	3.98E-10
BR-85	0.00E+00	0.00E+00	0.00E+00	0.00E+00	0.00E+00	0.00E+00
BR-87	0.00E+00	0.00E+00	0.00E+00	0.00E+00	0.00E+00	0.00E+00
TOTAL	0.00E+00	1.76E-02	8.79E-02	2.90E-01	6.07E-01	1.00E+00
DRAGON RUN # R0833820, JOB # 9514, 05/17/98						
BYPASS LEAKAGE 13.09-14.04 HR (CI-HRS)						
ISOTOPE	0-13.04 hr	13.04-14 hr	14.04-24 hr	24-96 hr	96-720 hr	Total
I-129	0.00E+00	0.00E+00	4.06E-10	3.05E-09	2.64E-08	2.99E-08
I-131	0.00E+00	7.96E-04	1.14E-02	7.44E-02	2.25E-01	3.12E-01
I-132	0.00E+00	1.83E-05	7.64E-05	4.49E-06	0.00E+00	9.92E-05
I-133	0.00E+00	1.10E-03	1.35E-02	3.27E-02	3.26E-03	5.06E-02
I-134	0.00E+00	3.13E-08	4.13E-08	0.00E+00	0.00E+00	7.26E-08
I-135	0.00E+00	3.84E-04	3.39E-03	1.95E-03	1.03E-06	5.73E-03
I-136	0.00E+00	0.00E+00	0.00E+00	0.00E+00	0.00E+00	0.00E+00
BR-83	0.00E+00	1.73E-06	7.49E-06	4.92E-07	0.00E+00	9.71E-06
BR-84	0.00E+00	0.00E+00	0.00E+00	0.00E+00	0.00E+00	0.00E+00
BR-85	0.00E+00	0.00E+00	0.00E+00	0.00E+00	0.00E+00	0.00E+00
BR-87	0.00E+00	0.00E+00	0.00E+00	0.00E+00	0.00E+00	0.00E+00
TOTAL	0.00E+00	2.30E-03	2.84E-02	1.09E-01	2.28E-01	3.68E-01
DRAGON RUN # R0833821, JOB # 9515, 05/17/98						

Nine Mile Point Nuclear Station Unit: 2 Disposition: N/A

Originator/Date	Checker/Date	Calculation No.	Revision
G.J.Patel (NUCORE)/5-21-98	G.R.Stinson / 5-22-98	H21C-069	00

Ref.

TABLE 3 (Cont'd)

INTEGRATED HALOGEN ACTIVITY ON CONTROL ROOM FILTER (0-720 HR)

BYPASS LEAKAGE 14.04-17.04 HR (CI-HRS)

ISOTOPE	0-17.04 hr	17.04-24 hr	24-96 hr	96-720 hr	Total	
I-129	3.16E-10	1.67E-09	1.73E-08	1.50E-07	1.69E-07	
I-131	9.01E-03	4.68E-02	4.21E-01	1.28E+00	1.76E+00	
I-132	1.09E-04	1.81E-04	2.54E-05	0.00E+00	3.15E-04	
I-133	1.16E-02	5.31E-02	1.85E-01	1.85E-02	2.68E-01	
I-134	6.92E-08	2.88E-08	1.17E-10	0.00E+00	9.81E-08	
I-135	3.48E-03	1.19E-02	1.11E-02	5.86E-06	2.65E-02	
I-136	0.00E+00	0.00E+00	0.00E+00	0.00E+00	0.00E+00	
BR-83	1.06E-05	1.82E-05	2.79E-06	0.00E+00	3.16E-05	
BR-84	0.00E+00	0.00E+00	0.00E+00	0.00E+00	0.00E+00	
BR-85	0.00E+00	0.00E+00	0.00E+00	0.00E+00	0.00E+00	
BR-87	0.00E+00	0.00E+00	0.00E+00	0.00E+00	0.00E+00	
TOTAL	2.42E-02	1.12E-01	6.17E-01	1.30E+00	2.05E+00	

DRAGON RUN # R0833822, JOB # 9516, 05/17/98

BYPASS LEAKAGE 17.04-19.04 HR (CI-HRS)

ISOTOPE	0-17.04 hr	17.04-19 hr	19.04-24 hr	24-96 hr	96-720 hr	Total
I-129	0.00E+00	1.78E-10	8.82E-10	1.28E-08	1.11E-07	1.25E-07
I-131	0.00E+00	5.02E-03	2.46E-02	3.12E-01	9.46E-01	1.29E+00
I-132	0.00E+00	3.13E-05	6.51E-05	1.88E-05	0.00E+00	1.15E-04
I-133	0.00E+00	6.07E-03	2.71E-02	1.37E-01	1.37E-02	1.84E-01
I-134	0.00E+00	6.37E-09	4.32E-09	0.00E+00	0.00E+00	1.07E-08
I-135	0.00E+00	1.55E-03	5.59E-03	8.20E-03	4.35E-06	1.53E-02
I-136	0.00E+00	0.00E+00	0.00E+00	0.00E+00	0.00E+00	0.00E+00
BR-83	0.00E+00	3.10E-06	6.66E-06	2.07E-06	0.00E+00	1.18E-05
BR-84	0.00E+00	0.00E+00	0.00E+00	0.00E+00	0.00E+00	0.00E+00
BR-85	0.00E+00	0.00E+00	0.00E+00	0.00E+00	0.00E+00	0.00E+00
BR-87	0.00E+00	0.00E+00	0.00E+00	0.00E+00	0.00E+00	0.00E+00
TOTAL	0.00E+00	1.27E-02	5.74E-02	4.57E-01	9.60E-01	1.49E+00

DRAGON RUN # R0833823, JOB # 9517, 05/17/98.

BYPASS LEAKAGE 19.04-24.0 HR (CI-HRS)

ISOTOPE	0-19.04 hr	19.04-24 hr	24-96 hr	96-720 hr	Total	
I-129	0.00E+00	2.47E-09	7.17E-08	6.21E-07	6.95E-07	
I-131	0.00E+00	6.88E-02	1.75E+00	5.29E+00	7.11E+00	
I-132	0.00E+00	1.39E-04	1.05E-04	0.00E+00	2.44E-04	
I-133	0.00E+00	7.39E-02	7.68E-01	7.66E-02	9.19E-01	
I-134	0.00E+00	5.67E-09	4.85E-10	0.00E+00	6.16E-09	
I-135	0.00E+00	1.43E-02	4.59E-02	2.43E-05	6.02E-02	
I-136	0.00E+00	0.00E+00	0.00E+00	0.00E+00	0.00E+00	
BR-83	0.00E+00	1.43E-05	1.16E-05	0.00E+00	2.59E-05	
BR-84	0.00E+00	0.00E+00	0.00E+00	0.00E+00	0.00E+00	
BR-85	0.00E+00	0.00E+00	0.00E+00	0.00E+00	0.00E+00	
BR-87	0.00E+00	0.00E+00	0.00E+00	0.00E+00	0.00E+00	
TOTAL	0.00E+00	1.57E-01	2.56E+00	5.37E+00	8.09E+00	

DRAGON RUN # R0833824, JOB # 9519, 05/17/98

Nine Mile Point Nuclear Station Unit: 2 Disposition: N/A

Originator/Date	Checker/Date	Calculation No.	Revision
G.J.Patel (NUCORE)/5-21-98	G.R.Stinson / 5-22-98	H21C-069	00

Ref.

TABLE 3 (Cont'd)

INTEGRATED HALOGEN ACTIVITY ON CONTROL ROOM FILTER (0-720 HR)

BYPASS LEAKAGE 24.0-96.0 HR (CI-HRS)

ISOTOPE	0-24.0 hr	24-96 hr	96-720 hr	Total		
I-129	0.00E+00	1.01E-07	1.75E-06	1.85E-06		
I-131	0.00E+00	2.36E+00	1.49E+01	1.73E+01		
I-132	0.00E+00	1.37E-05	0.00E+00	1.37E-05		
I-133	0.00E+00	6.85E-01	2.16E-01	9.01E-01		
I-134	0.00E+00	0.00E+00	0.00E+00	0.00E+00		
I-135	0.00E+00	1.71E-02	6.85E-05	1.72E-02		
I-136	0.00E+00	0.00E+00	0.00E+00	0.00E+00		
BR-83	0.00E+00	1.56E-06	0.00E+00	1.56E-06		
BR-84	0.00E+00	0.00E+00	0.00E+00	0.00E+00		
BR-85	0.00E+00	0.00E+00	0.00E+00	0.00E+00		
BR-87	0.00E+00	0.00E+00	0.00E+00	0.00E+00		
TOTAL	0.00E+00	3.06E+00	1.51E+01	1.82E+01		

DRAGON RUN # R0833825, JOB # 9520, 05/17/98

BYPASS LEAKAGE 96.0-720.0 HR (CI-HRS)

ISOTOPE	0-24.0	24-96 hr	96-720 hr	Total		
I-129	0.00E+00	0.00E+00	1.28E-06	1.28E-06		
I-131	0.00E+00	0.00E+00	7.13E+00	7.13E+00		
I-132	0.00E+00	0.00E+00	0.00E+00	0.00E+00		
I-133	0.00E+00	0.00E+00	1.52E-02	1.52E-02		
I-134	0.00E+00	0.00E+00	0.00E+00	0.00E+00		
I-135	0.00E+00	0.00E+00	1.54E-06	1.54E-06		
I-136	0.00E+00	0.00E+00	0.00E+00	0.00E+00		
BR-83	0.00E+00	0.00E+00	0.00E+00	0.00E+00		
BR-84	0.00E+00	0.00E+00	0.00E+00	0.00E+00		
BR-85	0.00E+00	0.00E+00	0.00E+00	0.00E+00		
BR-87	0.00E+00	0.00E+00	0.00E+00	0.00E+00		
TOTAL	0.00E+00	0.00E+00	7.15E+00	7.15E+00		

DRAGON RUN # R0833826, JOB # 9521, 05/17/98

BYPASS LEAKAGE RW/RB VENT RELEASE (CI-HRS)

ISOTOPE	0-1.71 hr	1.71-2.67 hr	2.67-3.05 hr	3.05-8.0 hr	8-24 hr	24-96 hr	96-720 hr	Total
I-129	0.00E+00	0.00E+00	0.00E+00	1.80E-10	2.13E-09	2.03E-08	3.07E-07	3.30E-07
I-131	3.55E-06	8.14E-05	7.25E-05	5.30E-03	6.04E-02	4.88E-01	2.38E+00	2.93E+00
I-132	3.24E-06	5.99E-05	4.51E-05	1.33E-03	1.20E-03	2.14E-05	0.00E+00	2.66E-03
I-133	7.06E-06	1.59E-04	1.39E-04	9.21E-03	7.60E-02	1.94E-01	2.90E-02	3.09E-01
I-134	2.36E-06	3.08E-05	1.74E-05	1.62E-04	1.17E-05	0.00E+00	0.00E+00	2.34E-04
I-135	5.98E-06	1.28E-04	1.07E-04	5.67E-03	2.30E-02	1.01E-02	8.99E-06	3.90E-02
I-136	0.00E+00	0.00E+00	0.00E+00	0.00E+00	0.00E+00	0.00E+00	0.00E+00	0.00E+00
BR-83	2.67E-07	4.97E-06	3.76E-06	1.15E-04	1.11E-04	2.36E-06	0.00E+00	2.37E-04
BR-84	9.61E-08	8.86E-07	3.65E-07	1.49E-06	1.00E-08	0.00E+00	0.00E+00	2.85E-06
BR-85	0.00E+00	0.00E+00	0.00E+00	0.00E+00	0.00E+00	0.00E+00	0.00E+00	0.00E+00
BR-87	0.00E+00	0.00E+00	0.00E+00	0.00E+00	0.00E+00	0.00E+00	0.00E+00	0.00E+00
TOTAL	2.26E-05	4.65E-04	3.85E-04	2.18E-02	1.61E-01	6.92E-01	2.41E+00	3.28E+00

DRAGON RUN # R0833827, JOB # 9522, 05/17/98

Nine Mile Point Nuclear Station Unit: 2 Disposition: N/A

Originator/Date	Checker/Date	Calculation No.	Revision
G.J.Patel (NUCORE)/5-21-98	G.R.Stinson / 5-22-98	H21C-069	00

Ref.

TABLE 3 (Cont'd)

INTEGRATED HALOGEN ACTIVITY ON CONTROL ROOM FILTER (0-720 HR)

BYPASS LEAKAGE VIA PASS PANEL (CI-HRS)

ISOTOPE	0-2 hr	2-8 hr	8-24 hr	24-96 hr	96-720 hr	Total
I-129	0.00E+00	1.26E-10	9.51E-10	8.35E-09	1.23E-07	1.32E-07
I-131	2.04E-04	3.74E-03	2.70E-02	2.01E-01	9.56E-01	1.19E+00
I-132	1.97E-04	1.16E-03	5.79E-04	9.27E-06	0.00E+00	1.95E-03
I-133	4.08E-04	6.61E-03	3.42E-02	8.06E-02	1.17E-02	1.34E-01
I-134	1.63E-04	2.34E-04	5.96E-06	0.00E+00	0.00E+00	4.03E-04
I-135	3.50E-04	4.25E-03	1.06E-02	4.28E-03	3.64E-06	1.95E-02
I-136	0.00E+00	0.00E+00	0.00E+00	0.00E+00	0.00E+00	0.00E+00
BR-83	1.62E-05	9.88E-05	5.35E-05	1.02E-06	0.00E+00	1.70E-04
BR-84	7.94E-06	3.98E-06	5.16E-09	0.00E+00	0.00E+00	1.19E-05
BR-85	4.28E-09	0.00E+00	0.00E+00	0.00E+00	0.00E+00	4.28E-09
BR-87	0.00E+00	0.00E+00	0.00E+00	0.00E+00	0.00E+00	0.00E+00
TOTAL	1.35E-03	1.61E-02	7.24E-02	2.86E-01	9.68E-01	1.34E+00

DRAGON RUN # R0833828, JOB # 9526, 05/17/98

BYPASS LEAKAGE SGTS BLDG-DRYWELL (CI-HRS)

ISOTOPE	0-0.9 hr	0.9-1.36 hr	1.36-8hr	8-10.58 hr	10.58-24 hr	24-96 hr	96-720 hr
I-129	0.00E+00	0.00E+00	6.64E-10	5.71E-10	6.57E-09	7.91E-08	1.29E-06
I-131	2.16E-07	4.01E-05	1.96E-02	1.67E-02	1.86E-01	1.90E+00	9.91E+00
I-132	2.43E-07	4.10E-05	5.92E-03	1.55E-03	2.13E-03	8.11E-05	0.00E+00
I-133	4.38E-07	8.07E-05	3.46E-02	2.64E-02	2.26E-01	7.44E-01	1.17E-01
I-134	2.48E-07	3.59E-05	1.20E-03	2.88E-05	5.92E-06	3.63E-10	0.00E+00
I-135	3.90E-07	7.02E-05	2.21E-02	1.29E-02	6.18E-02	3.82E-02	3.63E-05
I-136	0.00E+00	0.00E+00	0.00E+00	0.00E+00	0.00E+00	0.00E+00	0.00E+00
BR-83	1.98E-06	3.36E-06	5.06E-04	1.39E-04	2.03E-04	8.92E-06	0.00E+00
BR-84	1.45E-08	1.79E-06	2.25E-05	2.82E-08	1.33E-09	0.00E+00	0.00E+00
BR-85	0.00E+00	0.00E+00	0.00E+00	0.00E+00	0.00E+00	0.00E+00	0.00E+00
BR-87	0.00E+00	0.00E+00	0.00E+00	0.00E+00	0.00E+00	0.00E+00	0.00E+00
TOTAL	1.57E-06	2.73E-04	8.39E-02	5.77E-02	4.76E-01	2.68E+00	1.00E+01

DRAGON RUN # R0833829, JOB # 9527, 05/17/98

BYPASS LEAKAGE SGTS BLDG (PC) (CI-HRS)

ISOTOPE	0-2 hr	2-7.73 HR	7.73-8 HR	8-24 hr	24-96 hr	96-720 hr	Total
I-129	0.00E+00	0.00E+00	0.00E+00	1.44E-09	1.86E-08	3.18E-07	3.38E-07
I-131	3.71E-05	1.24E-03	1.12E-04	4.07E-02	4.47E-01	2.42E+00	2.91E+00
I-132	3.37E-05	3.87E-04	1.57E-05	5.92E-04	1.83E-05	0.00E+00	1.05E-03
I-133	7.38E-05	2.19E-03	1.85E-04	4.99E-02	1.73E-01	2.84E-02	2.54E-01
I-134	2.46E-05	7.63E-05	5.22E-07	4.28E-06	0.00E+00	0.00E+00	1.06E-04
I-135	6.24E-05	1.41E-03	1.00E-04	1.41E-02	8.72E-03	8.75E-06	2.44E-02
I-136	0.00E+00	0.00E+00	0.00E+00	0.00E+00	0.00E+00	0.00E+00	0.00E+00
BR-83	2.78E-06	3.30E-05	1.39E-06	5.54E-05	2.01E-06	0.00E+00	9.46E-05
BR-84	1.03E-05	1.24E-06	8.34E-10	3.22E-09	0.00E+00	0.00E+00	2.27E-06
BR-85	0.00E+00	0.00E+00	0.00E+00	0.00E+00	0.00E+00	0.00E+00	0.00E+00
BR-87	0.00E+00	0.00E+00	0.00E+00	0.00E+00	0.00E+00	0.00E+00	0.00E+00
TOTAL	2.35E-04	5.34E-03	4.15E-04	1.05E-01	6.29E-01	2.45E+00	3.19E+00

DRAGON RUN # R0833830, JOB # 9529, 05/17/98

Ref.

TABLE 3 (Cont'd)

INTEGRATED HALOGEN ACTIVITY ON CONTROL ROOM FILTER (0-720 HR)

TOTAL HALOGEN ACTIVITY ON CR FILTER FROM ALL AIRBORNE SOURCES (CI-HRS)

Isotope	Total
I-129	8.44E-06
I-131	7.66E+01
I-132	2.69E-01
I-133	9.29E+00
I-134	9.94E-02
I-135	1.67E+00
I-136	1.94E-08
BR-83	2.30E-02
BR-84	3.80E-03
BR-85	1.22E-06
BR-87	8.96E-11
TOTAL	8.79E+01

Ref.

External Cloud Shine Dose to Unit 1 CR

The activities are released to the environment from the various radioactive sources during and following a Unit 2 LOCA and carried over the Unit CR. The airborne activity external to Unit 1 CR contributes whole body gamma dose to CR operator. The post-LOCA isotopic activities released (Ci) to the environment from various sources are grouped together based on the release points and multiplied by the corresponding X/Qs to obtain the airborne activity (Ci-sec/m^3) outside the Unit 1 CR. The total isotopic activities at different time intervals are summed together in Table 4 and then input to RADIOISOTOPE computer code to convert the integrated activity concentration to MeV/cm^3 which is then input to a very simple QADMOD model to determine the dose rate to an individual located in the control room at elevation 283' (6 ' person standing at elevation 277'). The QADMOD model used has to have the flux to dose conversion factors modified to accommodate the unusual source unit input of MeV/cc.

A card image of RADIOISOTOPE Run No. R0883001, Job No. 4206, Dated 05/19/98.is given in APPENDIX A and the results are given below. Note the results are total specific activity integrated over 720 hrs.

Energy (MeV)	Integrated Activity (Mev/cm^3)
0.4	2.04E+05
0.8	2.98E+05
1.3	1.57E+04
1.7	3.22E+05
2.2	2.62E+05
2.5	1.78E+05
3.5	9.41E+04

Ref.

TABLE 4
CLOUD ACTIVITY AS A FUNCTION OF TIME & X/Q
RW/RB VENT RELEASE
0-8 HR

ISOTOPE	CONT+TIP 0-1 HR	ESF 0-1 HR	RW/RB 1-720 HR	TOTAL Ci	X/Q SEC/M^3	ACTIVITY Ci-SEC/M^3
I-129	2.17E-06	2.08E-05	7.71E-07	2.37E-05	7.92E-05	1.88E-09
I-131	6.55E+01	6.28E+02	2.29E+01	7.16E+02	7.92E-05	5.67E-02
I-132	7.88E+01	7.55E+02	8.22E+00	8.42E+02	7.92E-05	6.67E-02
I-133	1.34E+02	1.28E+03	4.10E+01	1.46E+03	7.92E-05	1.15E-01
I-134	9.09E+01	8.71E+02	2.10E+00	9.64E+02	7.92E-05	7.63E-02
I-135	1.21E+02	1.16E+03	2.73E+01	1.31E+03	7.92E-05	1.04E-01
I-136	1.42E-01	1.36E+00	0.00E+00	1.50E+00	7.92E-05	1.19E-04
BR-83	6.42E+00	6.15E+01	6.98E-01	6.86E+01	7.92E-05	5.43E-03
BR-84	6.11E+00	5.85E+01	4.42E-02	6.47E+01	7.92E-05	5.12E-03
BR-85	1.61E-01	1.55E+00	0.00E+00	1.71E+00	7.92E-05	1.36E-04
BR-87	2.88E-02	2.76E-01	0.00E+00	3.05E-01	7.92E-05	2.41E-05
KR-83M	2.00E+02	7.82E+02	1.43E+02	1.13E+03	7.92E-05	8.91E-02
KR-85M	4.42E+02	1.55E+01	2.81E+02	7.39E+02	7.92E-05	5.85E-02
KR-85	2.18E+01	1.49E-05	2.68E+01	4.86E+01	7.92E-05	3.85E-03
KR-87	6.60E+02	2.32E+01	1.06E+02	7.89E+02	7.92E-05	6.25E-02
KR-88	1.12E+03	0.00E+00	5.02E+02	1.62E+03	7.92E-05	1.28E-01
KR-89	1.96E+01	0.00E+00	1.15E-07	1.96E+01	7.92E-05	1.55E-03
XE-131M	1.14E+01	1.20E+00	1.41E+01	2.67E+01	7.92E-05	2.11E-03
XE-133M	1.66E+02	3.20E+01	2.00E+02	3.98E+02	7.92E-05	3.15E-02
XE-133	3.99E+03	4.48E+02	4.90E+03	9.34E+03	7.92E-05	7.40E-01
XE-135M	3.22E+02	2.39E+04	5.10E+02	2.47E+04	7.92E-05	1.96E+00
XE-135	5.96E+02	4.01E+03	1.55E+03	6.16E+03	7.92E-05	4.88E-01
XE-137	6.02E+01	0.00E+00	5.68E-06	6.02E+01	7.92E-05	4.77E-03
XE138	6.16E+02	0.00E+00	1.16E+00	6.17E+02	7.92E-05	4.89E-02
TOTAL	8.73E+03	3.40E+04	8.34E+03	5.11E+04		4.05E+00

RW/RB VENT RELEASE
8-24 HR

ISOTOPE	CONT+TIP 0-1 HR	ESF 0-1 HR	RW/RB 1-720 HR	TOTAL Ci	X/Q SEC/M^3	ACTIVITY Ci-SEC/M^3
I-129	0.00E+00	0.00E+00	2.23E-06	2.23E-06	5.71E-05	1.27E-10
I-131	0.00E+00	0.00E+00	6.36E+01	6.36E+01	5.71E-05	3.63E-03
I-132	0.00E+00	0.00E+00	1.81E+00	1.81E+00	5.71E-05	1.03E-04
I-133	0.00E+00	0.00E+00	8.33E+01	8.33E+01	5.71E-05	4.76E-03
I-134	0.00E+00	0.00E+00	2.15E-02	2.15E-02	5.71E-05	1.23E-06
I-135	0.00E+00	0.00E+00	2.78E+01	2.78E+01	5.71E-05	1.59E-03
I-136	0.00E+00	0.00E+00	0.00E+00	0.00E+00	5.71E-05	0.00E+00
BR-83	0.00E+00	0.00E+00	1.66E-01	1.66E-01	5.71E-05	9.48E-06
BR-84	0.00E+00	0.00E+00	1.95E-05	1.95E-05	5.71E-05	1.11E-09
BR-85	0.00E+00	0.00E+00	0.00E+00	0.00E+00	5.71E-05	0.00E+00
BR-87	0.00E+00	0.00E+00	0.00E+00	0.00E+00	5.71E-05	0.00E+00
KR-83M	0.00E+00	8.48E+01	5.18E+01	1.37E+02	5.71E-05	7.80E-03
KR-85M	0.00E+00	0.00E+00	1.86E+02	1.86E+02	5.71E-05	1.06E-02
KR-85	0.00E+00	0.00E+00	5.75E+00	5.75E+00	5.71E-05	3.28E-04
KR-87	0.00E+00	0.00E+00	4.93E+00	4.93E+00	5.71E-05	2.82E-04
KR-88	0.00E+00	0.00E+00	1.66E+02	1.66E+02	5.71E-05	9.48E-03
KR-89	0.00E+00	0.00E+00	0.00E+00	0.00E+00	5.71E-05	0.00E+00
XE-131M	0.00E+00	2.28E+00	4.17E+01	4.40E+01	5.71E-05	2.51E-03
XE-133M	0.00E+00	4.29E+01	5.39E+02	5.82E+02	5.71E-05	3.32E-02
XE-133	0.00E+00	6.00E+02	1.39E+04	1.45E+04	5.71E-05	8.28E-01
XE-135M	0.00E+00	1.58E+04	7.75E+02	1.66E+04	5.71E-05	9.46E-01
XE-135	0.00E+00	2.43E+03	4.36E+03	6.79E+03	5.71E-05	3.88E-01
XE-137	0.00E+00	0.00E+00	0.00E+00	0.00E+00	5.71E-05	0.00E+00
XE138	0.00E+00	0.00E+00	1.60E-08	1.60E-08	5.71E-05	9.14E-13
TOTAL	0.00E+00	1.90E+04	2.02E+04	3.92E+04		2.24E+00

Nine Mile Point Nuclear Station Unit: 2 Disposition: N/A

Originator/Date	Checker/Date	Calculation No.	Revision
G.J.Patel (NUCORE)/5-21-98	G.R.Stinson / 5-22-98	H21C-069	00

Ref.

TABLE 4 (Cont'd)
CLOUD ACTIVITY AS A FUNCTION OF TIME & X/Q
RW/RB VENT RELEASE
24-96 HR

ISOTOPE	CONT+TIP 0-1 HR	ESF 0-1 HR	RW/RB 1-720 HR	TOTAL Ci	X/Q SEC/M^3	ACTIVITY Ci-SEC/M^3
I-129	0.00E+00	0.00E+00	9.18E-06	9.18E-06	1.68E-05	1.54E-10
I-131	0.00E+00	0.00E+00	2.24E+02	2.24E+02	1.68E-05	3.76E-03
I-132	0.00E+00	0.00E+00	1.32E-02	1.32E-02	1.68E-05	2.22E-07
I-133	0.00E+00	0.00E+00	9.82E+01	9.82E+01	1.68E-05	1.65E-03
I-134	0.00E+00	0.00E+00	5.80E-08	5.80E-08	1.68E-05	9.74E-13
I-135	0.00E+00	0.00E+00	5.83E+00	5.83E+00	1.68E-05	9.79E-05
I-136	0.00E+00	0.00E+00	0.00E+00	0.00E+00	1.68E-05	0.00E+00
BR-83	0.00E+00	0.00E+00	1.45E-03	1.45E-03	1.68E-05	2.44E-08
BR-84	0.00E+00	0.00E+00	0.00E+00	0.00E+00	1.68E-05	0.00E+00
BR-85	0.00E+00	0.00E+00	0.00E+00	0.00E+00	1.68E-05	0.00E+00
BR-87	0.00E+00	0.00E+00	0.00E+00	0.00E+00	1.68E-05	0.00E+00
KR-83M	0.00E+00	8.25E-01	6.15E-01	1.44E+00	1.68E-05	2.42E-05
KR-85M	0.00E+00	0.00E+00	1.55E+01	1.55E+01	1.68E-05	2.60E-04
KR-85	0.00E+00	0.00E+00	3.19E+02	3.19E+02	1.68E-05	5.36E-03
KR-87	0.00E+00	0.00E+00	7.22E-04	7.22E-04	1.68E-05	1.21E-08
KR-88	0.00E+00	0.00E+00	3.07E+00	3.07E+00	1.68E-05	5.16E-05
KR-89	0.00E+00	0.00E+00	0.00E+00	0.00E+00	1.68E-05	0.00E+00
XE-131M	0.00E+00	8.80E+00	1.81E+02	1.90E+02	1.68E-05	3.19E-03
XE-133M	0.00E+00	5.53E+01	1.48E+03	1.54E+03	1.68E-05	2.58E-02
XE-133	0.00E+00	7.74E+02	4.90E+04	4.98E+04	1.68E-05	8.36E-01
XE-135M	0.00E+00	3.63E+03	2.92E+02	3.92E+03	1.68E-05	6.59E-02
XE-135	0.00E+00	5.59E+02	2.95E+03	3.51E+03	1.68E-05	5.90E-02
XE-137	0.00E+00	0.00E+00	0.00E+00	0.00E+00	1.68E-05	0.00E+00
XE138	0.00E+00	0.00E+00	0.00E+00	0.00E+00	1.68E-05	0.00E+00
TOTAL	0.00E+00	5.03E+03	5.46E+04	5.96E+04		1.00E+00

RW/RB VENT RELEASE
96-720 HR

ISOTOPE	CONT+TIP 0-1 HR	ESF 0-1 HR	RW/RB 1-720 HR	TOTAL Ci	X/Q SEC/M^3	ACTIVITY Ci-SEC/M^3	GRAND TOTAL Ci
I-129	0.00E+00	0.00E+00	5.97E-05	5.97E-05	4.05E-06	2.42E-10	2.40E-09
I-131	0.00E+00	0.00E+00	5.09E+02	5.09E+02	4.05E-06	2.06E-03	6.62E-02
I-132	0.00E+00	0.00E+00	0.00E+00	0.00E+00	4.05E-06	0.00E+00	6.68E-02
I-133	0.00E+00	0.00E+00	7.37E+00	7.37E+00	4.05E-06	2.98E-05	1.22E-01
I-134	0.00E+00	0.00E+00	0.00E+00	0.00E+00	4.05E-06	0.00E+00	7.64E-02
I-135	0.00E+00	0.00E+00	2.34E-03	2.34E-03	4.05E-06	9.48E-09	1.05E-01
I-136	0.00E+00	0.00E+00	0.00E+00	0.00E+00	4.05E-06	0.00E+00	1.19E-04
BR-83	0.00E+00	0.00E+00	0.00E+00	0.00E+00	4.05E-06	0.00E+00	5.44E-03
BR-84	0.00E+00	0.00E+00	0.00E+00	0.00E+00	4.05E-06	0.00E+00	5.12E-03
BR-85	0.00E+00	0.00E+00	0.00E+00	0.00E+00	4.05E-06	0.00E+00	1.36E-04
BR-87	0.00E+00	0.00E+00	0.00E+00	0.00E+00	4.05E-06	0.00E+00	2.41E-05
KR-83M	0.00E+00	6.97E-10	5.20E-10	1.22E-09	4.05E-06	4.93E-15	9.21E-02
KR-85M	0.00E+00	0.00E+00	1.70E-04	1.70E-04	4.05E-06	6.89E-10	6.94E-02
KR-85	0.00E+00	0.00E+00	2.07E+03	2.07E+03	4.05E-06	8.38E-03	1.79E-02
KR-87	0.00E+00	0.00E+00	0.00E+00	0.00E+00	4.05E-06	0.00E+00	6.28E-02
KR-88	0.00E+00	0.00E+00	5.49E-08	5.49E-08	4.05E-06	2.22E-13	1.38E-01
KR-89	0.00E+00	0.00E+00	0.00E+00	0.00E+00	4.05E-06	0.00E+00	1.55E-03
XE-131M	0.00E+00	2.66E+01	9.72E+02	9.99E+02	4.05E-06	4.04E-03	1.17E-02
XE-133M	0.00E+00	5.52E+00	7.75E+02	7.81E+02	4.05E-06	3.16E-03	9.13E-02
XE-133	0.00E+00	7.72E+01	7.68E+04	7.69E+04	4.05E-06	3.11E-01	2.68E+00
XE-135M	0.00E+00	1.92E+00	3.68E-01	2.29E+00	4.05E-06	9.27E-06	2.07E+00
XE-135	0.00E+00	2.96E-01	1.34E+01	1.37E+01	4.05E-06	5.55E-05	7.96E-01
XE-137	0.00E+00	0.00E+00	0.00E+00	0.00E+00	4.05E-06	0.00E+00	4.77E-03
XE138	0.00E+00	0.00E+00	0.00E+00	0.00E+00	4.05E-06	0.00E+00	4.89E-02
TOTAL	0.00E+00	1.12E+02	8.11E+04	8.13E+04		3.29E-01	6.53E+00

Nine Mile Point Nuclear Station Unit: 2 Disposition: N/A

Originator/Date	Checker/Date	Calculation No.	Revision
G.J.Patel (NUCORE)/5-21-98	G.R.Stinson / 5-22-98	H21C-069	00

Ref.

TABLE 4 (Cont'd)
CLOUD ACTIVITY AS A FUNCTION OF TIME & X/Q
MAIN STACK REALEASE
0-8 HR

ISOTOPE	CONT+TIP 1-720 HR	ESF 1-720 HR	PRESSURIZATION VENT	PRESSURIZATION SUPPLY	TOTAL Ci	X/Q SEC/M^3	ACTIVITY Ci-SEC/M^3
I-129	1.58E-06	1.50E-05	4.89E-07	1.38E-06	1.84E-05	5.55E-05	1.02E-09
I-131	4.67E+01	4.45E+02	1.48E+01	4.16E+01	5.48E+02	5.55E-05	3.04E-02
I-132	1.76E+01	1.67E+02	2.16E+01	6.08E+01	2.67E+02	5.55E-05	1.48E-02
I-133	8.38E+01	7.97E+02	3.08E+01	8.67E+01	9.98E+02	5.55E-05	5.54E-02
I-134	5.97E+00	5.71E+01	3.40E+01	9.56E+01	1.93E+02	5.55E-05	1.07E-02
I-135	5.60E+01	5.33E+02	2.92E+01	8.22E+01	7.00E+02	5.55E-05	3.89E-02
I-136	1.42E-03	1.37E-02	1.41E+01	3.96E+01	5.37E+01	5.55E-05	2.98E-03
BR-83	1.49E+00	1.42E+01	1.75E+00	4.92E+00	2.24E+01	5.55E-05	1.24E-03
BR-84	2.00E-01	1.92E+00	3.11E+00	8.76E+00	1.40E+01	5.55E-05	7.76E-04
BR-85	1.61E-03	1.55E-02	3.73E+00	1.05E+01	1.42E+01	5.55E-05	7.91E-04
BR-87	2.88E-04	2.77E-03	6.25E+00	1.76E+01	2.39E+01	5.55E-05	1.32E-03
KR-83M	6.02E+03	2.89E+03	6.94E+03	1.90E+02	1.60E+04	5.55E-05	8.90E-01
KR-85M	1.68E+04	5.82E+01	1.10E+04	3.10E+02	2.82E+04	5.55E-05	1.56E+00
KR-85	1.58E+03	6.42E-04	4.90E+02	1.38E+01	2.08E+03	5.55E-05	1.16E-01
KR-87	7.33E+03	2.56E+01	2.11E+04	5.94E+02	2.90E+04	5.55E-05	1.61E+00
KR-88	3.05E+04	0.00E+00	2.96E+04	8.35E+02	6.09E+04	5.55E-05	3.38E+00
KR-89	1.96E+01	0.00E+00	3.69E+04	1.04E+03	3.80E+04	5.55E-05	2.11E+00
XE-131M	8.28E+02	9.45E+00	2.57E+02	7.24E+00	1.10E+03	5.55E-05	6.11E-02
XE-133M	1.16E+04	2.46E+02	3.78E+03	1.06E+02	1.57E+04	5.55E-05	8.73E-01
XE-133	2.86E+05	3.50E+03	9.03E+04	2.54E+03	3.82E+05	5.55E-05	2.12E+01
XE-135M	1.02E+04	6.63E+04	5.69E+04	1.42E+03	1.35E+05	5.55E-05	7.48E+00
XE-135	6.48E+04	2.97E+04	1.78E+04	4.72E+02	1.13E+05	5.55E-05	6.26E+00
XE-137	6.03E+01	0.00E+00	7.82E+04	2.20E+03	8.05E+04	5.55E-05	4.47E+00
XE138	8.49E+02	0.00E+00	7.46E+04	2.10E+03	7.75E+04	5.55E-05	4.30E+00
TOTAL	4.37E+05	1.05E+05	4.28E+05	1.23E+04	9.82E+05		5.45E+01

MAIN STACK REALEASE
8-24 HR

ISOTOPE	CONT+TIP 1-720 HR	ESF 1-720 HR	PRESSURIZATION VENT	PRESSURIZATION SUPPLY	TOTAL Ci	X/Q SEC/M^3	ACTIVITY Ci-SEC/M^3
I-129	7.23E-06	6.72E-05	0.00E+00	0.00E+00	7.44E-05	2.56E-08	1.91E-12
I-131	2.06E+02	1.91E+03	0.00E+00	0.00E+00	2.12E+03	2.56E-08	5.42E-05
I-132	5.18E+00	4.87E+01	0.00E+00	0.00E+00	5.39E+01	2.56E-08	1.38E-06
I-133	2.66E+02	2.48E+03	0.00E+00	0.00E+00	2.75E+03	2.56E-08	7.03E-05
I-134	5.70E-02	5.39E-01	0.00E+00	0.00E+00	5.96E-01	2.56E-08	1.53E-08
I-135	8.61E+01	8.04E+02	0.00E+00	0.00E+00	8.90E+02	2.56E-08	2.28E-05
I-136	0.00E+00	0.00E+00	0.00E+00	0.00E+00	0.00E+00	2.56E-08	0.00E+00
BR-83	4.77E-01	4.48E+00	0.00E+00	0.00E+00	4.96E+00	2.56E-08	1.27E-07
BR-84	5.02E-05	4.74E-04	0.00E+00	0.00E+00	5.24E-04	2.56E-08	1.34E-11
BR-85	0.00E+00	0.00E+00	0.00E+00	0.00E+00	0.00E+00	2.56E-08	0.00E+00
BR-87	0.00E+00	0.00E+00	0.00E+00	0.00E+00	0.00E+00	2.56E-08	0.00E+00
KR-83M	2.69E+03	2.43E+03	2.19E+01	0.00E+00	5.14E+03	2.56E-08	1.32E-04
KR-85M	1.62E+04	5.54E+01	0.00E+00	0.00E+00	1.63E+04	2.56E-08	4.16E-04
KR-85	7.26E+03	4.95E-03	0.00E+00	0.00E+00	7.26E+03	2.56E-08	1.86E-04
KR-87	3.88E+02	1.34E+00	0.00E+00	0.00E+00	3.89E+02	2.56E-08	9.97E-06
KR-88	1.40E+04	0.00E+00	0.00E+00	0.00E+00	1.40E+04	2.56E-08	3.58E-04
KR-89	0.00E+00	0.00E+00	0.00E+00	0.00E+00	0.00E+00	2.56E-08	0.00E+00
XE-131M	3.83E+03	1.40E+02	5.90E-01	0.00E+00	3.97E+03	2.56E-08	1.02E-04
XE-133M	4.87E+04	2.77E+03	1.11E+01	0.00E+00	5.15E+04	2.56E-08	1.32E-03
XE-133	1.28E+06	4.07E+04	1.55E+02	0.00E+00	1.32E+06	2.56E-08	3.38E-02
XE-135M	3.69E+04	3.28E+05	4.07E+03	0.00E+00	3.69E+05	2.56E-08	9.45E-03
XE-135	3.01E+05	1.59E+05	6.27E+02	0.00E+00	4.61E+05	2.56E-08	1.18E-02
XE-137	0.00E+00	0.00E+00	0.00E+00	0.00E+00	0.00E+00	2.56E-08	0.00E+00
XE138	1.16E-06	0.00E+00	1.60E-06	0.00E+00	1.18E-06	2.56E-08	3.01E-14
TOTAL	1.71E+06	5.38E+05	4.89E+03	0.00E+00	2.25E+06		5.77E-02

Nine Mile Point Nuclear Station Unit: 2 Disposition: N/A

Originator/Date	Checker/Date	Calculation No.	Revision
G.J.Patel (NUCORE)/5-21-98	G.R.Stinson / 5-22-98	H21C-069	00

Ref.

TABLE 4
CLOUD ACTIVITY AS A FUNCTION OF TIME & X/Q
MAIN STACK REALEASE
24-96 HR

ISOTOPE	CONT+TIP 1-720 HR	ESF 1-720 HR	PRESSURIZATION VENT	PRESSURIZATION SUPPLY	TOTAL Ci	X/Q SEC/M^3	ACTIVITY Ci-SEC/M^3
I-129	3.76E-05	3.13E-04	0.00E+00	0.00E+00	3.51E-04	1.37E-08	4.81E-12
I-131	9.22E+02	7.67E+03	0.00E+00	0.00E+00	8.59E+03	1.37E-08	1.18E-04
I-132	5.48E-02	4.96E-01	0.00E+00	0.00E+00	5.51E-01	1.37E-08	7.55E-09
I-133	4.05E+02	3.48E+03	0.00E+00	0.00E+00	3.89E+03	1.37E-08	5.32E-05
I-134	2.50E-07	2.28E-06	0.00E+00	0.00E+00	2.53E-06	1.37E-08	3.47E-14
I-135	2.41E+01	2.14E+02	0.00E+00	0.00E+00	2.38E+02	1.37E-08	3.26E-06
I-136	0.00E+00	0.00E+00	0.00E+00	0.00E+00	0.00E+00	1.37E-08	0.00E+00
BR-83	6.02E-03	5.45E-02	0.00E+00	0.00E+00	6.05E-02	1.37E-08	8.29E-10
BR-84	0.00E+00	0.00E+00	0.00E+00	0.00E+00	0.00E+00	1.37E-08	0.00E+00
BR-85	0.00E+00	0.00E+00	0.00E+00	0.00E+00	0.00E+00	1.37E-08	0.00E+00
BR-87	0.00E+00	0.00E+00	0.00E+00	0.00E+00	0.00E+00	1.37E-08	0.00E+00
KR-83M	4.58E+01	6.41E+01	2.13E-01	0.00E+00	1.10E+02	1.37E-08	1.51E-06
KR-85M	1.85E+03	6.05E+00	0.00E+00	0.00E+00	1.86E+03	1.37E-08	2.54E-05
KR-85	3.79E+04	2.55E-02	0.00E+00	0.00E+00	3.79E+04	1.37E-08	5.19E-04
KR-87	8.83E-02	2.94E-04	0.00E+00	0.00E+00	8.86E-02	1.37E-08	1.21E-09
KR-88	3.68E+02	0.00E+00	0.00E+00	0.00E+00	3.68E+02	1.37E-08	5.04E-06
KR-89	0.00E+00	0.00E+00	0.00E+00	0.00E+00	0.00E+00	1.37E-08	0.00E+00
XE-131M	2.11E+04	2.32E+03	2.27E+00	0.00E+00	2.34E+04	1.37E-08	3.21E-04
XE-133M	1.73E+05	1.67E+04	1.43E+01	0.00E+00	1.90E+05	1.37E-08	2.60E-03
XE-133	5.77E+06	2.88E+05	2.00E+02	0.00E+00	6.06E+06	1.37E-08	8.30E-02
XE-135M	2.72E+04	2.45E+05	9.36E+02	0.00E+00	2.73E+05	1.37E-08	3.74E-03
XE-135	3.07E+05	1.35E+05	1.44E+02	0.00E+00	4.42E+05	1.37E-08	6.06E-03
XE-137	0.00E+00	0.00E+00	0.00E+00	0.00E+00	0.00E+00	1.37E-08	0.00E+00
XE-138	0.00E+00	0.00E+00	0.00E+00	0.00E+00	0.00E+00	1.37E-08	0.00E+00
TOTAL	6.34E+06	6.98E+05	1.30E+03	0.00E+00	7.04E+06		9.64E-02

MAIN STACK REALEASE
96-720 HR

ISOTOPE	CONT+TIP 1-720 HR	ESF 1-720 HR	PRESSURIZATION VENT	PRESSURIZATION SUPPLY	TOTAL Ci	X/Q SEC/M^3	ACTIVITY Ci-SEC/M^3	GRAND TOTAL Ci
I-129	2.77E-04	1.01E-03	0.00E+00	0.00E+00	1.29E-03	7.76E-09	9.99E-12	1.04E-09
I-131	2.49E+03	1.17E+04	0.00E+00	0.00E+00	1.42E+04	7.76E-09	1.10E-04	3.07E-02
I-132	0.00E+00	1.53E-10	0.00E+00	0.00E+00	1.53E-10	7.76E-09	1.19E-18	1.48E-02
I-133	3.93E+01	2.70E+02	0.00E+00	0.00E+00	3.09E+02	7.76E-09	2.40E-06	5.55E-02
I-134	0.00E+00	0.00E+00	0.00E+00	0.00E+00	0.00E+00	7.76E-09	0.00E+00	1.07E-02
I-135	1.26E-02	9.16E-02	0.00E+00	0.00E+00	1.04E-01	7.76E-09	8.09E-10	3.89E-02
I-136	0.00E+00	0.00E+00	0.00E+00	0.00E+00	0.00E+00	7.76E-09	0.00E+00	2.98E-03
BR-83	0.00E+00	0.00E+00	0.00E+00	0.00E+00	0.00E+00	7.76E-09	0.00E+00	1.24E-03
BR-84	0.00E+00	0.00E+00	0.00E+00	0.00E+00	0.00E+00	7.76E-09	0.00E+00	7.76E-04
BR-85	0.00E+00	0.00E+00	0.00E+00	0.00E+00	0.00E+00	7.76E-09	0.00E+00	7.91E-04
BR-87	0.00E+00	0.00E+00	0.00E+00	0.00E+00	0.00E+00	7.76E-09	0.00E+00	1.32E-03
KR-83M	5.72E-08	1.66E-07	1.80E-10	0.00E+00	2.23E-07	7.76E-09	1.73E-15	8.90E-01
KR-85M	2.65E-02	7.07E-05	0.00E+00	0.00E+00	2.66E-02	7.76E-09	2.06E-10	1.56E+00
KR-85	2.77E+05	8.22E-02	0.00E+00	0.00E+00	2.77E+05	7.76E-09	2.15E-03	1.19E-01
KR-87	0.00E+00	0.00E+00	0.00E+00	0.00E+00	0.00E+00	7.76E-09	0.00E+00	1.61E+00
KR-88	8.57E-06	0.00E+00	0.00E+00	0.00E+00	8.57E-06	7.76E-09	6.65E-14	3.38E+00
KR-89	0.00E+00	0.00E+00	0.00E+00	0.00E+00	0.00E+00	7.76E-09	0.00E+00	2.11E+00
XE-131M	1.38E+05	2.12E+04	6.88E+00	0.00E+00	1.59E+05	7.76E-09	1.24E-03	6.28E-02
XE-133M	1.17E+05	8.81E+03	1.42E+00	0.00E+00	1.26E+05	7.76E-09	9.76E-04	8.78E-01
XE-133	1.11E+07	3.35E+05	1.99E+01	0.00E+00	1.14E+07	7.76E-09	8.87E-02	2.14E+01
XE-135M	5.27E+01	4.39E+02	4.96E-01	0.00E+00	4.92E+02	7.76E-09	3.82E-06	7.50E+00
XE-135	2.08E+03	5.56E+02	7.65E-02	0.00E+00	2.64E+03	7.76E-09	2.05E-05	6.28E+00
XE-137	0.00E+00	0.00E+00	0.00E+00	0.00E+00	0.00E+00	7.76E-09	0.00E+00	4.37E+00
XE-138	0.00E+00	0.00E+00	1.60E-08	0.00E+00	1.60E-08	7.76E-09	1.24E-16	4.30E+00
TOTAL	1.16E+07	3.78E+05	2.88E+01	0.00E+00	1.20E+07		9.32E-02	5.47E+01

Ref.

TABLE 4 (Cont'd)
CLOUD ACTIVITY AS A FUNCTION OF TIME & X/Q
0-8 HR

ISOTOPE	MAIN STEAM TUNNEL RELEASE 0-6.86 HR	6.86-8 HR	TOTAL	X/Q SEC/M^3	ACTIVITY CI-SEC/M^3
I-129	1.73E-07	9.06E-08	2.64E-07	9.55E-05	2.52E-11
I-131	5.15E+00	2.66E+00	7.81E+00	9.55E-05	7.46E-04
I-132	3.22E+00	4.29E-01	3.65E+00	9.55E-05	3.48E-04
I-133	9.72E+00	4.46E+00	1.42E+01	9.55E-05	1.35E-03
I-134	2.20E+00	1.82E-02	2.22E+00	9.55E-05	2.12E-04
I-135	7.36E+00	2.49E+00	9.85E+00	9.55E-05	9.41E-04
I-136	2.41E-02	0.00E+00	2.41E-02	9.55E-05	2.30E-06
BR-83	2.68E-01	3.77E-02	3.06E-01	9.55E-05	2.92E-05
BR-84	1.23E-01	3.83E-05	1.23E-01	9.55E-05	1.18E-05
BR-85	1.32E-02	0.00E+00	1.32E-02	9.55E-05	1.26E-06
BR-87	7.25E-03	0.00E+00	7.25E-03	9.55E-05	6.92E-07
KR-83M	4.21E+01	9.75E+00	5.19E+01	9.55E-05	4.95E-03
KR-85M	8.09E+01	2.23E+01	1.03E+02	9.55E-05	9.86E-03
KR-85	5.84E+00	3.13E+00	8.97E+00	9.55E-05	8.57E-04
KR-87	6.58E+01	2.41E+00	6.82E+01	9.55E-05	6.51E-03
KR-88	1.71E+02	3.09E+01	2.02E+02	9.55E-05	1.93E-02
KR-89	4.90E+00	0.00E+00	4.90E+00	9.55E-05	4.68E-04
XE-131M	3.07E+00	1.66E+00	4.73E+00	9.55E-05	4.52E-04
XE-133M	4.39E+01	2.30E+01	6.69E+01	9.55E-05	6.39E-03
XE-133	1.07E+03	5.70E+02	1.64E+03	9.55E-05	1.57E-01
XE-135M	1.39E+02	4.64E+01	1.85E+02	9.55E-05	1.77E-02
XE-135	2.89E+02	2.00E+02	4.89E+02	9.55E-05	4.67E-02
XE-137	1.25E+01	0.00E+00	1.25E+01	9.55E-05	1.19E-03
XE138	4.42E+01	2.49E-07	4.42E+01	9.55E-05	4.22E-03
TOTAL	2.00E+03	9.20E+02	2.92E+03		2.79E-01

8-24 HR

ISOTOPE	MAIN STEAM TUNNEL RELEASE 9.61 HR	13.09 HR	14.4 HR	17.04 HR	19.04 HR	24.0 HR	TOTAL CI
I-129	1.27E-07	1.52E-06	5.73E-07	3.24E-06	2.41E-06	1.35E-05	2.14E-05
I-131	3.71E+00	4.42E+01	1.65E+01	9.25E+01	6.81E+01	3.76E+02	6.01E+02
I-132	3.98E-01	2.30E+00	4.05E-01	1.29E+00	4.70E-01	9.94E-01	5.86E+00
I-133	5.96E+00	6.58E+01	2.28E+01	1.21E+02	8.31E+01	4.14E+02	7.13E+02
I-134	8.82E-03	1.78E-02	7.80E-04	1.05E-03	1.15E-04	6.59E-05	2.86E-02
I-135	3.02E+00	2.79E+01	8.12E+00	3.74E+01	2.18E+01	8.53E+01	1.84E+02
I-136	0.00E+00	0.00E+00	0.00E+00	0.00E+00	0.00E+00	0.00E+00	0.00E+00
BR-83	3.55E-02	2.11E-01	3.82E-02	1.24E-01	4.64E-02	1.02E-01	5.57E-01
BR-84	9.71E-06	7.42E-06	6.50E-08	3.89E-08	1.16E-09	2.00E-10	1.72E-05
BR-85	0.00E+00	0.00E+00	0.00E+00	0.00E+00	0.00E+00	0.00E+00	0.00E+00
BR-87	0.00E+00	0.00E+00	0.00E+00	0.00E+00	0.00E+00	0.00E+00	0.00E+00
KR-83M	9.99E+00	6.40E+01	1.27E+01	2.79E+01	1.23E+01	2.44E+01	1.51E+02
KR-85M	2.54E+01	2.05E+02	5.28E+01	1.44E+02	8.32E+01	2.42E+02	7.52E+02
KR-85	4.41E+00	5.23E+01	1.97E+01	7.26E+01	6.02E+01	2.94E+02	5.03E+02
KR-87	1.63E+00	5.44E+00	4.93E-01	6.62E-01	1.50E-01	1.40E-01	8.52E+00
KR-88	3.13E+01	2.04E+02	4.17E+01	9.63E+01	4.50E+01	9.88E+01	5.17E+02
KR-89	0.00E+00	0.00E+00	0.00E+00	0.00E+00	0.00E+00	0.00E+00	0.00E+00
XE-131M	2.34E+00	2.79E+01	1.06E+01	3.91E+01	3.25E+01	1.60E+02	2.72E+02
XE-133M	3.22E+01	3.76E+02	1.39E+02	5.06E+02	4.12E+02	1.96E+03	3.43E+03
XE-133	8.03E+02	9.49E+03	3.56E+03	1.31E+04	1.08E+04	5.22E+04	9.00E+04
XE-135M	6.09E+01	5.12E+02	1.70E+02	4.71E+02	3.35E+02	1.11E+03	2.66E+03
XE-135	2.87E+02	3.34E+03	1.21E+03	4.19E+03	3.20E+03	1.35E+04	2.57E+04
XE-137	0.00E+00	0.00E+00	0.00E+00	0.00E+00	0.00E+00	0.00E+00	0.00E+00
XE138	9.02E-09	4.43E-10	0.00E+00	0.00E+00	0.00E+00	0.00E+00	9.46E-09
TOTAL	1.27E+03	1.44E+04	5.26E+03	1.89E+04	1.52E+04	7.05E+04	1.25E+05

Ref.

TABLE 4 (Cont'd)
CLOUD ACTIVITY AS A FUNCTION OF TIME & X/Q
0-24 HR

ISOTOPE	TOTAL Ci	X/Q SEC/M^3	ACTIVITY Ci-SEC/M^3
I-129	2.07E-05	6.95E-05	1.44E-09
I-131	5.82E+02	6.95E-05	4.04E-02
I-132	5.73E+00	6.95E-05	3.98E-04
I-133	6.89E+02	6.95E-05	4.79E-02
I-134	2.85E-02	6.95E-05	1.98E-06
I-135	1.77E+02	6.95E-05	1.23E-02
I-136	0.00E+00	6.95E-05	0.00E+00
BR-83	5.44E-01	6.95E-05	3.78E-05
BR-84	1.72E-05	6.95E-05	1.20E-09
BR-85	0.00E+00	6.95E-05	0.00E+00
BR-87	0.00E+00	6.95E-05	0.00E+00
KR-83M	1.51E+02	6.95E-05	1.05E-02
KR-85M	7.52E+02	6.95E-05	5.23E-02
KR-85	5.03E+02	6.95E-05	3.50E-02
KR-87	8.52E+00	6.95E-05	5.92E-04
KR-88	5.17E+02	6.95E-05	3.59E-02
KR-89	0.00E+00	6.95E-05	0.00E+00
XE-131M	2.72E+02	6.95E-05	1.89E-02
XE-133M	3.43E+03	6.95E-05	2.38E-01
XE-133	9.00E+04	6.95E-05	6.25E+00
XE-135M	2.65E+03	6.95E-05	1.84E-01
XE-135	2.57E+04	6.95E-05	1.79E+00
XE-137	0.00E+00	6.95E-05	0.00E+00
XE138	9.46E-09	6.95E-05	6.58E-13
TOTAL	1.25E+05		8.72E+00

24-96 HR

ISOTOPE	MAIN STEAM TUNNEL RELEASE						GRAND TOTAL Ci-SEC/M^3
	24-96 HR	X/Q SEC/M^3	ACTIVITY Ci-SEC/M^3	96-720 HR	X/Q SEC/M^3	ACTIVITY Ci-SEC/M^3	
I-129	1.26E-04	2.09E-05	2.63E-09	7.39E-04	5.19E-06	3.84E-09	7.93E-09
I-131	3.08E+03	2.09E-05	6.44E-02	6.33E+03	5.19E-06	3.29E-02	1.35E-01
I-132	1.86E-01	2.09E-05	3.89E-06	0.00E+00	5.19E-06	0.00E+00	7.50E-04
I-133	1.35E+03	2.09E-05	2.82E-02	9.22E+01	5.19E-06	4.79E-04	7.80E-02
I-134	8.56E-07	2.09E-05	1.79E-11	0.00E+00	5.19E-06	0.00E+00	2.14E-04
I-135	8.09E+01	2.09E-05	1.69E-03	2.93E-02	5.19E-06	1.52E-07	1.50E-02
I-136	0.00E+00	2.09E-05	0.00E+00	0.00E+00	5.19E-06	0.00E+00	2.30E-06
BR-83	2.04E-02	2.09E-05	4.26E-07	0.00E+00	5.19E-06	0.00E+00	6.74E-05
BR-84	0.00E+00	2.09E-05	0.00E+00	0.00E+00	5.19E-06	0.00E+00	1.18E-05
BR-85	0.00E+00	2.09E-05	0.00E+00	0.00E+00	5.19E-06	0.00E+00	1.26E-06
BR-87	0.00E+00	2.09E-05	0.00E+00	0.00E+00	5.19E-06	0.00E+00	6.92E-07
KR-83M	7.61E+00	2.09E-05	1.59E-04	6.31E-09	5.19E-06	3.27E-14	1.56E-02
KR-85M	1.95E+02	2.09E-05	4.08E-03	2.13E-03	5.19E-06	1.11E-08	6.62E-02
KR-85	3.97E+03	2.09E-05	8.30E-02	2.56E+04	5.19E-06	1.33E-01	2.52E-01
KR-87	9.45E-03	2.09E-05	1.98E-07	0.00E+00	5.19E-06	0.00E+00	7.11E-03
KR-88	3.91E+01	2.09E-05	8.17E-04	6.87E-07	5.19E-06	3.57E-12	5.60E-02
KR-89	0.00E+00	2.09E-05	0.00E+00	0.00E+00	5.19E-06	0.00E+00	4.68E-04
XE-131M	2.26E+03	2.09E-05	4.72E-02	1.21E+04	5.19E-06	6.28E-02	1.29E-01
XE-133M	1.84E+04	2.09E-05	3.85E-01	9.69E+03	5.19E-06	5.03E-02	6.79E-01
XE-133	6.10E+05	2.09E-05	1.27E+01	9.57E+05	5.19E-06	4.97E+00	2.41E+01
XE-135M	2.54E+03	2.09E-05	5.31E-02	4.01E+00	5.19E-06	2.08E-05	2.55E-01
XE-135	3.68E+04	2.09E-05	7.69E-01	1.68E+02	5.19E-06	8.72E-04	2.60E+00
XE-137	0.00E+00	2.09E-05	0.00E+00	0.00E+00	5.19E-06	0.00E+00	1.19E-03
XE138	0.00E+00	2.09E-05	0.00E+00	0.00E+00	5.19E-06	0.00E+00	4.22E-03
TOTAL	6.79E+05		1.42E+01	1.01E+06		5.25E+00	2.84E+01

Nine Mile Point Nuclear Station | Unit: 2 | Disposition: N/A

Originator/Date	Checker/Date	Calculation No.	Revision
G.J.Patel (NUCORE)/5-21-98	G.R.Stinson / 5-22-98	H21C-069	00

Ref.

TABLE 4 (Cont'd)
CLOUD ACTIVITY AS A FUNCTION OF TIME & X/Q
PASS PANEL RELEASE
0-24 HR

ISOTOPE	0-8 HR	X/Q SEC/M^3	ACTIVITY Ci-SEC/M^3	8-24 HR	X/Q SEC/M^3	ACTIVITY Ci-SEC/M^3	TOTAL Ci-SEC/M^3
I-129	2.26E-07	1.48E-04	3.34E-11	4.41E-07	1.07E-04	4.72E-11	8.06E-11
I-131	6.72E+00	1.48E-04	9.95E-04	1.26E+01	1.07E-04	1.35E-03	2.34E-03
I-132	3.77E+00	1.48E-04	5.58E-04	3.60E-01	1.07E-04	3.85E-05	5.96E-04
I-133	1.25E+01	1.48E-04	1.85E-03	1.65E+01	1.07E-04	1.77E-03	3.62E-03
I-134	2.47E+00	1.48E-04	3.66E-04	4.29E-03	1.07E-04	4.59E-07	3.66E-04
I-135	9.14E+00	1.48E-04	1.35E-03	5.53E+00	1.07E-04	5.92E-04	1.94E-03
I-136	2.71E-02	1.48E-04	4.01E-06	0.00E+00	1.07E-04	0.00E+00	4.01E-06
BR-83	3.13E-01	1.48E-04	4.63E-05	3.30E-02	1.07E-04	3.53E-06	4.99E-05
BR-84	1.37E-01	1.48E-04	2.03E-05	3.87E-06	1.07E-04	4.14E-10	2.03E-05
BR-85	1.48E-02	1.48E-04	2.19E-06	0.00E+00	1.07E-04	0.00E+00	2.19E-06
BR-87	8.13E-03	1.48E-04	1.20E-06	0.00E+00	1.07E-04	0.00E+00	1.20E-06
KR-83M	5.20E+01	1.48E-04	7.70E-03	1.04E+01	1.07E-04	1.11E-03	8.81E-03
KR-85M	1.01E+02	1.48E-04	1.49E-02	3.70E+01	1.07E-04	3.96E-03	1.89E-02
KR-85	7.85E+00	1.48E-04	1.16E-03	1.53E+01	1.07E-04	1.64E-03	2.80E-03
KR-87	7.67E+01	1.48E-04	1.14E-02	9.81E-01	1.07E-04	1.05E-04	1.15E-02
KR-88	2.09E+02	1.48E-04	3.09E-02	3.30E+01	1.07E-04	3.53E-03	3.45E-02
KR-89	5.64E+00	1.48E-04	8.35E-04	0.00E+00	1.07E-04	0.00E+00	8.35E-04
XE-131M	4.13E+00	1.48E-04	6.11E-04	8.26E+00	1.07E-04	8.84E-04	1.50E-03
XE-133M	5.88E+01	1.48E-04	8.70E-03	1.07E+02	1.07E-04	1.14E-02	2.02E-02
XE-133	1.44E+03	1.48E-04	2.13E-01	2.76E+03	1.07E-04	2.95E-01	5.08E-01
XE-135M	1.81E+02	1.48E-04	2.68E-02	1.69E+02	1.07E-04	1.81E-02	4.49E-02
XE-135	4.05E+02	1.48E-04	5.99E-02	8.66E+02	1.07E-04	9.27E-02	1.53E-01
XE-137	1.44E+01	1.48E-04	2.13E-03	0.00E+00	1.07E-04	0.00E+00	2.13E-03
XE138	5.09E+01	1.48E-04	7.53E-03	3.19E-09	1.07E-04	3.41E-13	7.53E-03
TOTAL	2.64E+03		3.91E-01	4.04E+03		4.32E-01	8.23E-01

96-720 HR

ISOTOPE	PASS PANEL RELEASE						GRAND TOTAL Ci-SEC/M^3
	24-96 HR	X/Q SEC/M^3	ACTIVITY Ci-SEC/M^3	96-720 HR	X/Q SEC/M^3	ACTIVITY Ci-SEC/M^3	
I-129	1.85E-06	3.20E-05	5.92E-11	1.19E-05	7.83E-06	9.32E-11	2.33E-10
I-131	4.51E+01	3.20E-05	1.44E-03	1.02E+02	7.83E-06	7.99E-04	4.55E-03
I-132	2.72E-03	3.20E-05	8.70E-08	0.00E+00	7.83E-06	0.00E+00	5.97E-04
I-133	1.98E+01	3.20E-05	6.34E-04	1.47E+00	7.83E-06	1.15E-05	4.26E-03
I-134	1.25E-08	3.20E-05	4.00E-13	0.00E+00	7.83E-06	0.00E+00	3.66E-04
I-135	1.18E+00	3.20E-05	3.78E-05	4.68E-04	7.83E-06	3.66E-09	1.98E-03
I-136	0.00E+00	3.20E-05	0.00E+00	0.00E+00	7.83E-06	0.00E+00	4.01E-06
BR-83	2.99E-04	3.20E-05	9.57E-09	0.00E+00	7.83E-06	0.00E+00	4.99E-05
BR-84	0.00E+00	3.20E-05	0.00E+00	0.00E+00	7.83E-06	0.00E+00	2.03E-05
BR-85	0.00E+00	3.20E-05	0.00E+00	0.00E+00	7.83E-06	0.00E+00	2.19E-06
BR-87	0.00E+00	3.20E-05	0.00E+00	0.00E+00	7.83E-06	0.00E+00	1.20E-06
KR-83M	1.28E-01	3.20E-05	4.10E-06	1.05E-10	7.83E-06	8.22E-16	8.81E-03
KR-85M	3.15E+00	3.20E-05	1.01E-04	3.39E-05	7.83E-06	2.65E-10	1.90E-02
KR-85	6.42E+01	3.20E-05	2.05E-03	4.13E+02	7.83E-06	3.23E-03	8.09E-03
KR-87	1.52E-04	3.20E-05	4.86E-09	0.00E+00	7.83E-06	0.00E+00	1.15E-02
KR-88	6.31E-01	3.20E-05	2.02E-05	1.10E-08	7.83E-06	8.61E-14	3.45E-02
KR-89	0.00E+00	3.20E-05	0.00E+00	0.00E+00	7.83E-06	0.00E+00	8.35E-04
XE-131M	3.65E+01	3.20E-05	1.17E-03	1.94E+02	7.83E-06	1.52E-03	4.18E-03
XE-133M	2.98E+02	3.20E-05	9.54E-03	1.55E+02	7.83E-06	1.21E-03	3.09E-02
XE-133	9.86E+03	3.20E-05	3.16E-01	1.54E+04	7.83E-06	1.21E-01	9.45E-01
XE-135M	6.23E+01	3.20E-05	1.99E-03	7.55E-02	7.83E-06	5.91E-07	4.69E-02
XE-135	5.97E+02	3.20E-05	1.91E-02	2.68E+00	7.83E-06	2.10E-05	1.72E-01
XE-137	0.00E+00	3.20E-05	0.00E+00	0.00E+00	7.83E-06	0.00E+00	2.13E-03
XE138	0.00E+00	3.20E-05	0.00E+00	0.00E+00	7.83E-06	0.00E+00	7.53E-03
TOTAL	1.10E+04		3.52E-01	1.63E+04		1.27E-01	1.30E+00

Nine Mile Point Nuclear Station Unit: 2 Disposition: N/A

Originator/Date	Checker/Date	Calculation No.	Revision
G.J.Patel (NUCORE)/5-21-98	G.R.Stinson / 5-22-98	H21C-069	00

Ref.

TABLE 4 (Cont'd)
CLOUD ACTIVITY AS A FUNCTION OF TIME & X/Q
0-8 HR
SGTS BLDG RELEASES

ISOTOPE	DRYWELL 0-8 HR	P.CONT 0-8 HR	TOTAL Ci	X/Q SEC/M^3	ACTIVITY Ci-SEC/M^3
I-129	1.23E-06	1.00E-07	1.33E-06	1.49E-04	1.98E-10
I-131	3.65E+01	2.97E+00	3.95E+01	1.49E-04	5.88E-03
I-132	1.62E+01	1.23E+00	1.74E+01	1.49E-04	2.60E-03
I-133	6.66E+01	5.34E+00	7.19E+01	1.49E-04	1.07E-02
I-134	6.36E+00	5.20E-01	6.88E+00	1.49E-04	1.03E-03
I-135	4.64E+01	3.63E+00	5.00E+01	1.49E-04	7.45E-03
I-136	0.00E+00	0.00E+00	0.00E+00	1.49E-04	0.00E+00
BR-83	1.36E+00	1.03E-01	1.46E+00	1.49E-04	2.18E-04
BR-84	2.01E-01	1.88E-02	2.20E-01	1.49E-04	3.28E-05
BR-85	1.20E-07	3.54E-08	1.55E-07	1.49E-04	2.32E-11
BR-87	0.00E+00	0.00E+00	0.00E+00	1.49E-04	0.00E+00
KR-83M	2.56E+02	1.93E+01	2.75E+02	1.49E-04	4.10E-02
KR-85M	4.95E+02	3.82E+01	5.33E+02	1.49E-04	7.94E-02
KR-85	4.27E+01	3.48E+00	4.62E+01	1.49E-04	6.88E-03
KR-87	2.59E+02	2.00E+01	2.79E+02	1.49E-04	4.16E-02
KR-88	9.47E+02	7.19E+01	1.02E+03	1.49E-04	1.52E-01
KR-89	1.54E-04	4.31E-05	1.97E-04	1.49E-04	2.94E-08
XE-131M	2.25E+01	1.83E+00	2.43E+01	1.49E-04	3.63E-03
XE-133M	3.19E+02	2.59E+01	3.45E+02	1.49E-04	5.14E-02
XE-133	7.80E+03	6.35E+02	8.44E+03	1.49E-04	1.26E+00
XE-135M	8.89E+02	6.85E+01	9.58E+02	1.49E-04	1.43E-01
XE-135	2.35E+03	1.94E+02	2.54E+03	1.49E-04	3.79E-01
XE-137	2.76E-03	7.03E-04	3.46E-03	1.49E-04	5.16E-07
XE138	1.36E+01	1.80E+00	1.54E+01	1.49E-04	2.29E-03
TOTAL	1.36E+04	1.09E+03	1.47E+04		2.18E+00

8-24 HR
SGTS BLDG RELEASES

ISOTOPE	DRYWELL 0-10.58 HR	DRYWELL 10.58-24 HR	P.CONT 8-24 HR	TOTAL Ci	X/Q SEC/M^3	ACTIVITY Ci-SEC/M^3
I-129	4.64E-07	4.13E-06	1.27E-06	5.86E-06	1.10E-04	6.45E-10
I-131	1.35E+01	1.17E+02	3.62E+01	1.67E+02	1.10E-04	1.83E-02
I-132	1.28E+00	1.83E+00	1.03E+00	4.14E+00	1.10E-04	4.55E-04
I-133	2.14E+01	1.48E+02	4.74E+01	2.17E+02	1.10E-04	2.38E-02
I-134	2.43E-02	6.20E-03	1.23E-02	4.28E-02	1.10E-04	4.71E-06
I-135	1.05E+01	4.38E+01	1.59E+01	7.02E+01	1.10E-04	7.72E-03
I-136	0.00E+00	0.00E+00	0.00E+00	0.00E+00	1.10E-04	0.00E+00
BR-83	1.14E-01	1.72E-01	9.49E-02	3.81E-01	1.10E-04	4.19E-05
BR-84	2.43E-05	1.48E-06	1.10E-05	3.68E-05	1.10E-04	4.05E-09
BR-85	0.00E+00	0.00E+00	0.00E+00	0.00E+00	1.10E-04	0.00E+00
BR-87	0.00E+00	0.00E+00	0.00E+00	0.00E+00	1.10E-04	0.00E+00
KR-83M	3.31E+01	5.81E+01	2.93E+01	1.21E+02	1.10E-04	1.33E-02
KR-85M	8.65E+01	2.64E+02	1.06E+02	4.57E+02	1.10E-04	5.02E-02
KR-85	1.61E+01	1.44E+02	4.41E+01	2.04E+02	1.10E-04	2.25E-02
KR-87	4.82E+00	2.69E+00	2.82E+00	1.03E+01	1.10E-04	1.14E-03
KR-88	1.03E+02	1.93E+02	9.49E+01	3.91E+02	1.10E-04	4.30E-02
KR-89	0.00E+00	0.00E+00	0.00E+00	0.00E+00	1.10E-04	0.00E+00
XE-131M	8.57E+00	7.75E+01	2.37E+01	1.10E+02	1.10E-04	1.21E-02
XE-133M	1.17E+02	9.90E+02	3.07E+02	1.41E+03	1.10E-04	1.56E-01
XE-133	2.93E+03	2.57E+04	7.92E+03	3.66E+04	1.10E-04	4.02E+00
XE-135M	2.55E+02	1.18E+03	3.72E+02	1.81E+03	1.10E-04	1.99E-01
XE-135	1.05E+03	7.82E+03	2.47E+03	1.13E+04	1.10E-04	1.25E+00
XE-137	0.00E+00	0.00E+00	0.00E+00	0.00E+00	1.10E-04	0.00E+00
XE138	2.07E-08	0.00E+00	9.16E-09	2.99E-08	1.10E-04	3.28E-12
TOTAL	4.65E+03	3.67E+04	1.15E+04	5.29E+04		5.81E+00

Nine Mile Point Nuclear Station Unit: 2 Disposition: N/A

Originator/Date	Checker/Date	Calculation No.	Revision
G.J.Patel (NUCORE)/5-21-98	G.R.Stinson / 5-22-98	H21C-069	00

Ref.

TABLE 4 (Cont'd)
CLOUD ACTIVITY AS A FUNCTION OF TIME & X/Q
24-96 HR
SGTS BLDG RELEASES

ISOTOPE	DRYWELL 24-96 HR	P.CONT 24-96 HR	TOTAL Ci	X/Q SEC/M^3	ACTIVITY Ci-SEC/M^3
I-129	2.06E-05	5.30E-06	2.59E-05	3.36E-05	8.70E-10
I-131	5.03E+02	1.29E+02	6.32E+02	3.36E-05	2.12E-02
I-132	3.03E-02	7.81E-03	3.81E-02	3.36E-05	1.28E-06
I-133	2.21E+02	5.69E+01	2.78E+02	3.36E-05	9.34E-03
I-134	1.40E-07	3.59E-08	1.76E-07	3.36E-05	5.91E-12
I-135	1.32E+01	3.40E+00	1.66E+01	3.36E-05	5.58E-04
I-136	0.00E+00	0.00E+00	0.00E+00	3.36E-05	0.00E+00
BR-83	3.33E-03	8.57E-04	4.19E-03	3.36E-05	1.41E-07
BR-84	0.00E+00	0.00E+00	0.00E+00	3.36E-05	0.00E+00
BR-85	0.00E+00	0.00E+00	0.00E+00	3.36E-05	0.00E+00
BR-87	0.00E+00	0.00E+00	0.00E+00	3.36E-05	0.00E+00
KR-83M	1.40E+00	3.60E-01	1.76E+00	3.36E-05	5.91E-05
KR-85M	3.51E+01	9.05E+00	4.42E+01	3.36E-05	1.48E-03
KR-85	7.15E+02	1.84E+02	8.99E+02	3.36E-05	3.02E-02
KR-87	1.70E-03	4.38E-04	2.14E-03	3.36E-05	7.18E-08
KR-88	7.04E+00	1.81E+00	8.85E+00	3.36E-05	2.97E-04
KR-89	0.00E+00	0.00E+00	0.00E+00	3.36E-05	0.00E+00
XE-131M	4.07E+02	1.05E+02	5.12E+02	3.36E-05	1.72E-02
XE-133M	3.32E+03	8.55E+02	4.18E+03	3.36E-05	1.40E-01
XE-133	1.10E+05	2.83E+04	1.38E+05	3.36E-05	4.65E+00
XE-135M	6.18E+02	1.53E+02	7.71E+02	3.36E-05	2.59E-02
XE-135	6.64E+03	1.71E+03	8.35E+03	3.36E-05	2.81E-01
XE-137	0.00E+00	0.00E+00	0.00E+00	3.36E-05	0.00E+00
XE138	0.00E+00	0.00E+00	0.00E+00	3.36E-05	0.00E+00
TOTAL	1.22E+05	3.15E+04	1.54E+05		5.17E+00

96-720 HR

ISOTOPE	SGTS BLDG RELEASES DRYWELL 96-720 HR	P.CONT 96-720 HR	TOTAL Ci	X/Q SEC/M^3	ACTIVITY Ci-SEC/M^3	GRAND TOTAL Ci-SEC/M^4
I-129	1.33E-04	3.44E-05	1.67E-04	8.55E-06	1.43E-09	3.14E-09
I-131	1.14E+03	2.93E+02	1.43E+03	8.55E-06	1.23E-02	5.77E-02
I-132	0.00E+00	0.00E+00	0.00E+00	8.55E-06	0.00E+00	3.05E-03
I-133	1.65E+01	4.25E+00	2.08E+01	8.55E-06	1.77E-04	4.41E-02
I-134	0.00E+00	0.00E+00	0.00E+00	8.55E-06	0.00E+00	1.03E-03
I-135	5.24E-03	1.35E-03	6.59E-03	8.55E-06	5.63E-08	1.57E-02
I-136	0.00E+00	0.00E+00	0.00E+00	8.55E-06	0.00E+00	0.00E+00
BR-83	0.00E+00	0.00E+00	0.00E+00	8.55E-06	0.00E+00	2.60E-04
BR-84	0.00E+00	0.00E+00	0.00E+00	8.55E-06	0.00E+00	3.28E-05
BR-85	0.00E+00	0.00E+00	0.00E+00	8.55E-06	0.00E+00	2.32E-11
BR-87	0.00E+00	0.00E+00	0.00E+00	8.55E-06	0.00E+00	0.00E+00
KR-83M	1.16E-09	2.96E-10	1.46E-09	8.55E-06	1.24E-14	5.43E-02
KR-85M	3.80E-04	9.79E-05	4.78E-04	8.55E-06	4.09E-09	1.31E-01
KR-85	4.62E+03	1.19E+03	5.81E+03	8.55E-06	4.97E-02	1.09E-01
KR-87	0.00E+00	0.00E+00	0.00E+00	8.55E-06	0.00E+00	4.27E-02
KR-88	1.23E-07	3.16E-08	1.55E-07	8.55E-06	1.32E-12	1.95E-01
KR-89	0.00E+00	0.00E+00	0.00E+00	8.55E-06	0.00E+00	2.94E-08
XE-131M	2.17E+03	5.60E+02	2.73E+03	8.55E-06	2.33E-02	5.62E-02
XE-133M	1.73E+03	4.47E+02	2.18E+03	8.55E-06	1.86E-02	3.66E-01
XE-133	1.72E+05	4.43E+04	2.16E+05	8.55E-06	1.85E+00	1.18E+01
XE-135M	8.02E-01	2.03E-01	1.01E+00	8.55E-06	8.59E-06	3.67E-01
XE-135	3.00E+01	7.73E+00	3.77E+01	8.55E-06	3.23E-04	1.91E+00
XE-137	0.00E+00	0.00E+00	0.00E+00	8.55E-06	0.00E+00	5.16E-07
XE138	0.00E+00	0.00E+00	0.00E+00	8.55E-06	0.00E+00	2.29E-03
TOTAL	1.82E+05	4.68E+04	2.29E+05		1.95E+00	1.51E+01

Nine Mile Point Nuclear Station Unit: 2 Disposition: N/A

Originator/Date	Checker/Date	Calculation No.	Revision
G.J.Patel (NUCORE)/5-21-98	G.R.Stinson / 5-22-98	H21C-069	00

Ref.

CLOUD ACTIVITY AS A FUNCTION OF TIME & X/Q
TOTAL CLOUD ACTIVITY IN CISEC/M³
0-720 HR

ISOTOPE	TOTAL ACTIVITY CI-SEC/M^3
I-129	1.51E-05
I-131	3.09E-01
I-132	1.00E-01
I-133	3.27E-01
I-134	1.05E-01
I-135	1.98E-01
I-136	3.13E-03
BR-83	8.20E-03
BR-84	7.05E-03
BR-85	9.59E-04
BR-87	1.36E-03
KR-83M	1.08E+00
KR-85M	1.86E+00
KR-85	5.06E-01
KR-87	1.75E+00
KR-88	3.83E+00
KR-89	2.11E+00
XE-131M	2.64E-01
XE-133M	2.05E+00
XE-133	6.10E+01
XE-135M	1.06E+01
XE-135	1.18E+01
XE-137	4.48E+00
XE138	4.38E+00
TOTAL	1.07E+02

Nine Mile Point Nuclear Station | Unit: 2 | Disposition: N/A

Originator/Date	Checker/Date	Calculation No.	Revision
G.J.Patel (NUCORE)/5-21-98	G.R.Stinson / 5-22-98	H21C-069	00

Ref.

QADMOD INPUT

Airborne cloud external to Unit 1 control room is modeled as a cylinder having radius and height equal to 80,000 cm and divided into 27 source segments. The airborne cloud is placed on the roof of the CR at EL 300'-0". The CR roof is 8" concrete slab (Ref 40e, f, & g) and detector is located 6 feet off the floor at 277'-0" elevation (i.e., 277'-0" + 6'0" = 283'-0"). A cylindrical source with the finer mesh adjacent to shield is input to QADMOD code to maximize the CR dose. Dose conversion factors resident in QADMOD are modified to convert the unusual source input of MeV/cc. This is discussed below. A sketch of the model used is shown below.

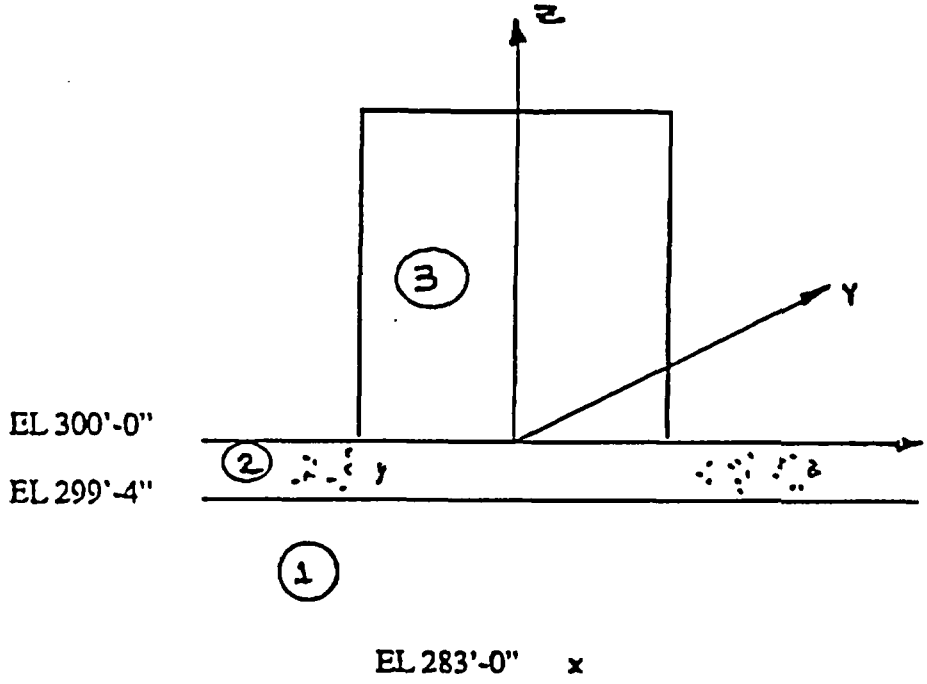

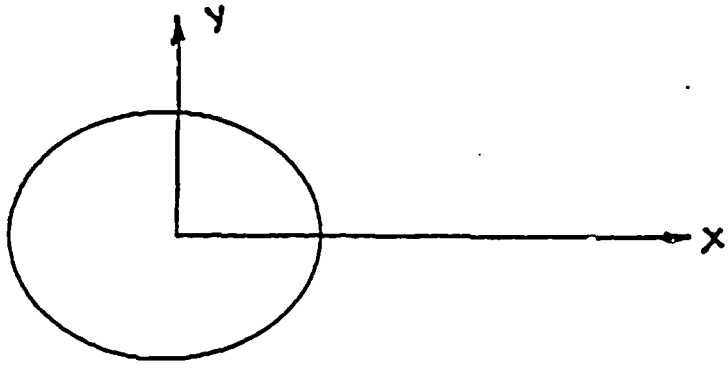

Nine Mile Point Nuclear Station Unit: 2 Disposition: N/A

Originator/Date	Checker/Date	Calculation No.	Revision
G.J.Patel (NUCORE)/5-21-98	G.R.Stinson / 5-22-98	H21C-069	00

Ref.

QADMOD conversion factors internal to the code are in units of mRem/hr per MeV/cm^2-sec (found in Appendix B page 1 of QADMOD Users Manual) which assumes either a volumetric source input of Mev/cc-sec and a volume input (cc) or a total source strength of Mev/sec. QADMOD then, normally outputs results in mRem/hr. In this case, the units of input are a volume and a source intensity of MeV/cc. Therefore, the QADMOD conversion factors must be multiplied by a factor of 2.777E-07 (1 hr/ 3600 sec) * (1 Rem/1000 mRem) as shown in the following table. These flux to dose conversion factors have been input to QADMOD by entering zero for NSET(25) field in card type 0100 and adding the card type 6000 to introduce the new flux to dose conversion factors.

Energy (MeV)	QADMOD CF (mRem/hr) per (Mev/cm^2-sec)	New CF (Rem per Mev/cm^2)
0.4	2.10E-03	5.83E-10
0.8	2.00E-03	5.56E-10
1.3	1.80E-03	5.00E-10
1.7	1.70E-03	4.72E-10
2.2	1.60E-03	4.44E-10
2.5	1.50E-03	4.17E-10
3.5	1.40E-03	3.89E-10
6.15	1.10E-03	3.06E-10

The card images of input to QADMOD is shown in APPENDIX A, and the dose results are presented below.

QADMOD Run No. R0833, JOB No. 4221 Dated 05/19/98 calculates the 30 day gamma dose to the control room. The result is 0.621 Rem.

Ref.

Skyshine Dose From Unit 2 Containment

Calculation PR-C-23-B-1 (Ref. 36) calculates the 30-day gamma air scattered radiation dose at the various locations including the Unit 1 control room, due to a LOCA at Unit 2. The dose point (DP) locations and their coordinates are shown in Reference 36, pages 24 and 31 respectively. The coordinates of DP 10 are compared with those used in this calculation as follows:

horizontal distance between Unit 2 RB and Unit 1 CR:

Reference 36 (pages 24 & 31):

y = 20513 cm = 20513 cm / 30.48 cm/ft = 673 ft

Analysis on pages 65 & 66 of this calculation:

x = 671.5' and y = 57'

Horizontal distance = $(671.5^2 + 57^2)^{1/2}$ = 674 ft

Distance of DP 10 in 23B is approximately same as one used in this calculation (page 66).

Elevation of Unit 1 CR roof:

Reference 36:

z = 1188.7 cm = 1188.7 cm / 30.48 cm/ft = 39 ft above grade EL 261'-0"
= 261'-0" + 39'-0" = 300'-0"

Analysis in this calculation:

Roof elevation of Unit 1 CR = 300'-0"

Since the horizontal and vertical distance coordinates of DP 10 are the same as used here, the scattered (skyshine) dose rate information for DP 10 is utilized to calculate the skyshine dose at the Unit 1 CR from the radiation environment in the Unit 2 RB. Since the containment + TIP & ESF leak rates changed since the analysis in Reference 36 was performed (Refs. 34 & 35), the radiation source term developed for the direct shine dose calculation in the previous section is used to calculate the gamma source and total gamma dose in the Unit 2 RB as shown in Table 5.

The average scattered dose rates and standard deviations for the various dose points are calculated for seven energy groups in Reference 36, pages 44 through 50. The unshielded scattered dose rate can be calculated using the seven energy group average scattered dose rates and corresponding source fraction (Ref. 36, page 59). The seven energy group average scattered dose rates for DP 10 are listed in Table 6 and total unshielded gamma scattered dose rate is calculated in Table 6. The U1 CR scattered dose is calculated as follows:

Ref.

Unshielded scattered dose rate at Unit CR roof = 5.309E-14 mrem/hr/γ/sec (Table 6)

Gamma source = 3.13E+10 γ/cc x 2.72E+10 cc = 8.514E+20 γ

Unshielded gamma dose at the Unit 1 CR roof

= 5.309E-14 mrem/hr/γ/sec x 8.514E+20 γ x $(3600)^{-1}$ hr/sec = 1.2556E+04 mRem = 12.56 Rem

The roof of Unit 1 CR is 8" concrete. (Ref. 40). However, a dose reduction factor 1.35E-02 (Ref. 36, page 72) is used for 6" concrete wall.

Therefore, the skyshine dose in Unit 1 CR = 12.56 Rem x 1.35E-02 = 0.170 Rem

Reference 36 uses the angular and energy distribution of the skyshine flux at the top of TSC roof (Ref. 36, pages 63 through 66) to determine the dose reduction factors for different thicknesses of concrete slabs, using ANINSND. The use of 6" concrete shielding for the 8" thick concrete roof at the Unit 1 CR and an additional 17 feet (300'-0" - 283'-0" = 17'-0") between the roof and the operator, will compensate for any non-conservative skyshine dose resulting from the use of the subject angular and energy distributions.

Ref.

TABLE 5

30-Day Integrated Gamma Source Term

Energy E (Mev)	Integrated Activity * (Mev-hr/cc-sec)	Conversion Factor (γ-sec/Mev-hr)	Gamma Source (γ/cc)	Fraction of Total Source
0.4	2.47E+06	9.00E+03	2.22E+10	7.10E-01
0.8	1.49E+06	4.50E+03	6.71E+09	2.14E-01
1.3	4.57E+05	2.77E+03	1.27E+09	4.04E-02
1.7	3.34E+05	2.12E+03	7.07E+08	2.26E-02
2.2	1.31E+05	1.64E+03	2.14E+08	6.85E-03
2.5	1.24E+05	1.44E+03	1.79E+08	5.70E-03
3.5	5.33E+02	1.03E+03	5.48E+05	1.75E-05
Total			3.13E+10	

* From Radioisotope Run No. R0883001, Job No. 8006, Dated 05/15/98

$$\gamma/cc = [Mev\text{-}hr/cc\text{-}sec] * CF = [Mev\text{-}hr/cc\text{-}sec]*[1/E\ (Mev/\gamma) * 3600\ sec/hr] \Rightarrow CF = 3600/E$$

TABLE 6

Unshielded Scattered Gamma Dose Rate at Roof Unit 1 Control Room

Energy (Mev)	Scattered Dose Rate* (Mrem/hr/γ/sec)	Standard Daviation* (Mrem/hr/γ/sec)	Fraction of Total	Scattered Dose Rate x Fraction
0.4	4.180E-14	1.120E-14	7.102E-01	2.969E-14
0.8	7.890E-14	2.033E-14	2.142E-01	1.690E-14
1.3	8.025E-14	1.995E-14	4.043E-02	3.245E-15
1.7	7.668E-14	1.875E-14	2.266E-02	1.738E-15
2.2	1.729E-13	5.350E-14	6.849E-03	1.184E-15
2.5	5.745E-14	7.567E-15	5.705E-03	3.277E-16
3.5	9.990E-14	2.171E-14	1.752E-05	1.750E-18
Total				5.309E-14

* From Reference 36, pages 44 through 50 for Detector # 10

Ref.

RESULTS

The Unit 1 control room doses from all radioactive sources due to a Loss of Coolant Accident (LOCA) at Unit 2, are given in Tables 7 & 8 and compared with their GDC 19 allowable limits. The thyroid and beta skin doses are within the GDC 19 allowable limits. The whole body gamma dose exceeds the allowable limit by 1.12 Rem.

The total whole body gamma dose in Unit 1 CR 6.12 Rem. This dose is divided by the number of hours of expected control room occupancy to determine the **average gamma dose rate** to control room workers for the assumed 30-day duration of the LOCA.

Total 30-day gamma dose in control room = 6.12 Rem

Total expected control room occupancy:
(occupancy factors per Ref. 8)

100% occupancy for first 24 hours	= 24 hours
60% occupancy from 24 - 96 hours	= 43.2 hours
40% occupancy from 96-720 hours	= 249.6 hours

Total occupancy time = 24 + 43.2 + 249.6 = 316.8 hours
Total time in 30 days = 720 hours

average gamma dose rate = 6.12 Rem/hr x 1000 mRem/Rem x 1/316.8 hrs = 1.93E+01 mRem/hr.

CONCLUSIONS

The Unit 1 CR is habitable if the Unit 2 MSIV leakage is reduced to 9.5 scfh/MSIV. The results of this analysis based on a post-LOCA leakage of 9.5 scfh/MSIV, is shown in Tables 7 & 8. Therefore, it is recommended that the Unit 2 MSIV leakage should be administratively controlled to a limit of less than or equal to 9.5 scfh/MSIV or total MSIV leak rate of 38 scfh (4 x 9.5 scfh = 38 scfh).

Review of References 34 & 35 indicates that the MSIV leakage contributes the most to the post-LOCA thyroid dose at the Unit 2 CR. The Unit 2 Technical Specifications establish the MSIV leakage limit of 24.0 scfh per MSIV (Ref. 11d) based on the Unit 2 CR thyroid dose being within GDC 19 limit. A parametric study was performed to evaluate Unit 1 CR thyroid dose based on the most limiting post-LOCA MSIV leakage at Unit 2. The use of current MSIV leakage of 24 scfh/MSIV results in a Unit 1 CR thyroid dose which exceeds the GDC thyroid dose limit.

The whole body gamma dose in the Unit 1 CR exceeds the GDC allowable limit by 1.12 Rem (Table 8). The post-LOCA gamma dose rate in Unit 1 CR averaged over 30 days is calculated to be 19.3 mRem/hr. 0-2 integrated dose is calculated to be 186 mRem (Table) which indicates that the peak gamma dose rate is expected to be higher than 18.9 mRem/hr. An area radiation monitor, R010A-3 (computer point location E492) is located inside the control room at EL 277'-0" (Ref. 45, page 16). The monitor alarm setpoint is at 0.01/1.0 mRem/hr (Ref. 45, page 16). The high gamma

Ref.

dose in Unit 1 CR during and following a LOCA at Unit 2 will exceed the alarm set point of the Unit 1 CR area radiation monitor. The required corrective actions upon annunciation of the alarm are mentioned in Alarm Response Procedure N1-ARP-H1 (Ref. 44), page 34. The required corrective actions are:

1. Notify Radiation Protection to survey area to locate source.

2. If required, activate Emergency Plan AND enter EOP-5, Secondary Containment Control.

The Unit 1 CR integrated whole body gamma dose exposure is graphed in Figure 2 for Gamma Dose (Rem) vs post-LOCA times. The total whole body gamma exposure includes contributions from all post-LOCA radioactive sources. The graph shows that the whole body gamma dose reaches the 5 Rem limit at approximately 72 hours (3 days) for 100% occupancy for the first 24 hours, 60% occupancy from 24 to 96 hrs, and 40% occupancy from 96 to 720 hrs. Normally, the CR operators work in 12 hour rotating shifts. Considering the normal shift rotation, the total whole body gamma dose will be distributed among the operators in a such way that the 30-day occupational dose limit can be safely maintained.

Ref.

TABLE 7
30-DAY INTEGRATED DOSES IN CONTROL ROOM FROM INTERNAL AIRBORNE SOURCES

Control Room Doses - 9.5 scfh With Filter @ 90% Efficiency MSIV Failure Case

RUN No.	RELEASE PATH ANALYZED	30-DAY CONTROL ROOM DOES (REM)		
		THYROID	GAMMA	BETA SKIN
R0833811	CONT+TIP LKG 0-60 Min	7.60E-01	2.42E-03	3.05E-02
R0833812	CONT+TIP LKG 1-720 Hrs	2.24E-01	4.64E-02	9.02E-01
R0833813	ESF LKG 0-60 Min	7.20E+00	2.05E-03	1.76E-02
R0833814	ESF LKG 1-720 Hrs	2.10E+00	1.13E-02	1.46E-01
R0833815	PRESSURIZATION-VENT LINES	7.42E-01	5.89E-02	8.57E-01
R0833816	PRESSURIZATION-SUPPLY LINES	2.09E+00	1.93E-03	2.59E-02
R0833817	BYPASS LKG-STM TUN-0-6.86 Hrs	6.01E-02	4.73E-04	7.47E-03
R0833818	BYPASS LKG/6.86 - 8 Hrs	2.20E-02	1.37E-04	3.24E-03
R0833819	BYPASS LKG/8 - 9.61 Hrs	2.18E-02	1.31E-04	3.26E-03
R0833820	BYPASS LKG/9.61 - 13.09 Hrs	2.52E-01	1.27E-03	3.72E-02
R0833821	BYPASS LKG/13.09 14.4 Hrs	9.14E-02	4.24E-04	1.35E-02
R0833822	BYPASS LKG/14.4 - 17.04 Hrs	4.95E-01	1.43E-03	4.82E-02
R0833823	BYPASS LKG/17.04 - 19.04 Hrs	3.58E-01	1.08E-03	3.83E-02
R0833824	BYPASS LKG/19.04 - 24 Hrs	1.91E+00	4.59E-03	1.75E-01
R0833825	BYPASS LKG/24 - 96 Hrs	4.07E+00	7.53E-03	4.40E-01
R0833826	BYPASS LKG/96 - 720 Hrs	1.87E+00	1.96E-03	1.54E-01
R0833827	BYPASS LKG/RW/RB VENT	8.04E-01	3.22E-03	1.05E-01
R0833828	BYPASS LKG/PASS RELEASES	3.59E-01	1.65E-03	4.54E-02
R0833829	BYPASS LKG/SGTS BLDG (DRYWELL	3.24E+00	1.21E-02	4.16E-01
R0833830	BYPASS LKG/SGTS (P CONT)	7.72E-01	2.47E-03	9.68E-02
	TOTAL	2.74E+01	1.59E-01	3.47E+00

Ref.

TABLE 8

UNIT 1 CONTROL ROOM 30-DAY INTEGRATED DOSES DUE TO UNIT 2 LOCA

SOURCE OF RADIATION	30-DAYUNIT 1CONTROL ROOM DOSE (REM)		
	THYROID	GAMMA	BETA SKIN
INTERNAL CLOUD	2.74E+01	1.59E-01	3.47E+00
DIRECT SHINE FROM U2	0.00E+00	5.03E+00	0.00E+00
U1 FILTER SHINE	0.00E+00	1.41E-01	0.00E+00
EXTERNAL CLOUD	0.00E+00	6.21E-01	0.00E+00
SKYSHINE FROM U2	0.00E+00	1.70E-01	0.00E+00
TOTAL	2.74E+01	6.12E+00	3.47E+00
ALLOWABLE LIMIT	3.00E+01	5.00E+00	3.00E+01

NIAGARA MOHAWK NUCLEAR ENGINEERING	CALCULATION CONTINUATION SHEET	Page 101 (Next ____)

Nine Mile Point Nuclear Station Unit: 2 Disposition: N/A

Originator/Date	Checker/Date	Calculation No.	Revision
G.J.Patel (NUCORE)/5-21-98	G.R.Stinson / 5-22-98	H21C-069	00

Ref.

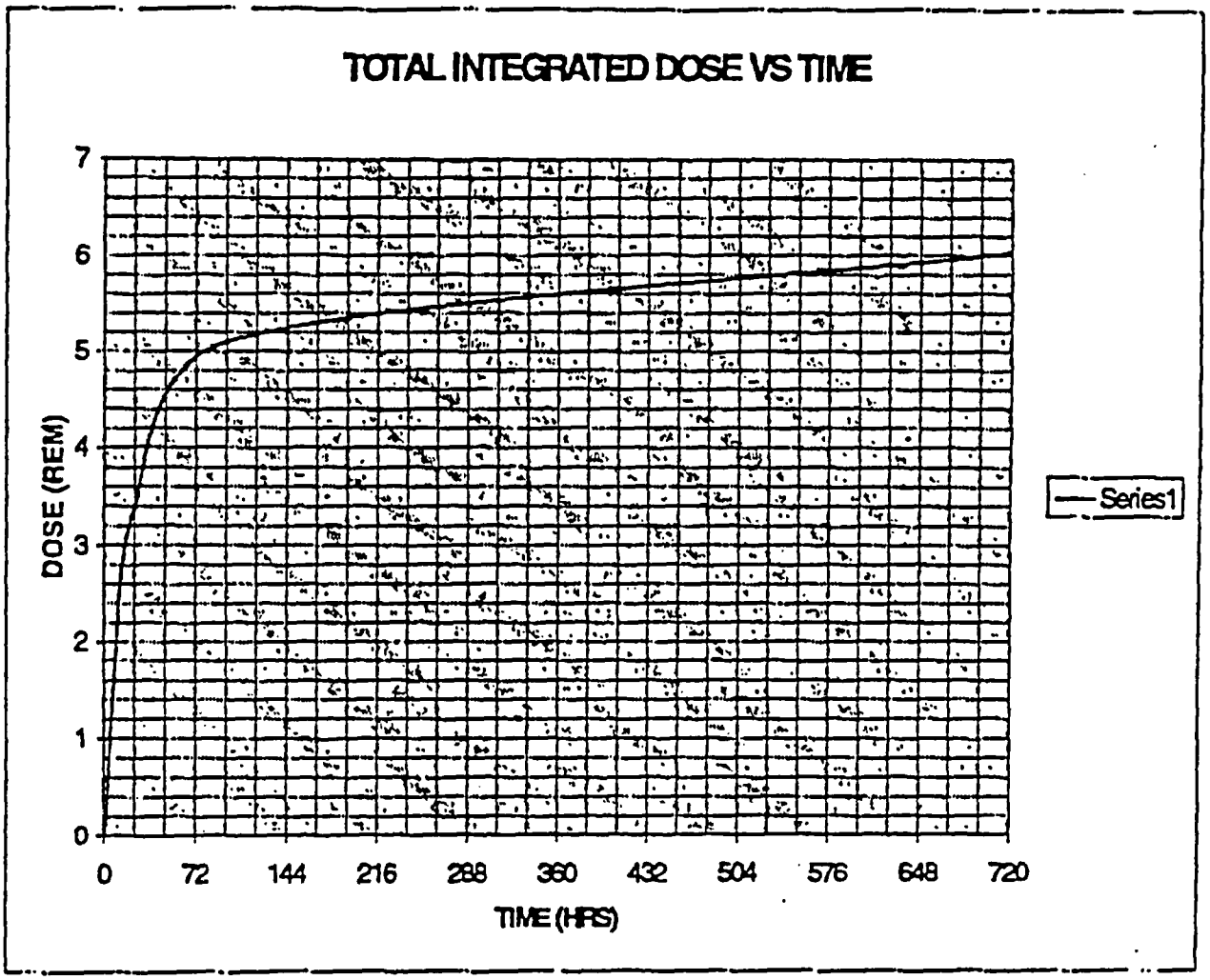

FIGURE 2

POST-LOCA INTEGRATED GAMMA DOSE VS TIME

Nine Mile Point Nuclear Station Unit: 2 Disposition: N/A

Originator/Date	Checker/Date	Calculation No.	Revision
G.J.Patel (NUCORE)/5-21-98	G.R.Stinson / 5-22-98	H21C-069	00

Ref.

List of Computer Runs

Airborne Sources

Code	Run No.	Job No.	Date	Description
DRAGON	R0833811	9497	05/17/98	Containment & TIP Leakage, 0-1 Hr
DRAGON	R0833812	9498	05/17/98	Containment & TIP Leakage, 1-720 Hr
DRAGON	R0833813	9842	05/17/98	61 gpm ESF Leakage, 0-1 Hr
DRAGON	R0833814	9501	05/17/98	61 gpm ESF Leakage, 1-720 Hr
DRAGON	R0833815	9502	05/17/98	Pressure Control Mode Purge, Vent Lines
DRAGON	R0833816	9531	05/05/98	Pressure Control Mode Purge, Supply Lines
DRAGON	R0833817	9564	05/17/98	Bypass Lkg via Mn Stm Tunnel, 0-6.86 Hrs
DRAGON	R0833818	9626	05/17/98	Bypass Lkg via Mn Stm Tunnel, 6.86-8 Hrs
DRAGON	R0833819	9513	05/17/98	Bypass Lkg via Mn Stm Tunnel, 8-9.61 Hrs
DRAGON	R0833820	9514	05/17/98	Bypass Lkg via Mn Stm Tunnel, 9.61-13.09 Hrs
DRAGON	R0833821	9515	05/17/98	Bypass Lkg via Mn Stm Tunnel, 13.09-14.4 Hrs
DRAGON	R0833822	9516	05/17/98	Bypass Lkg via Mn Stm Tunnel, 14.4-17.04 Hrs
DRAGON	R0833823	9517	05/17/98	Bypass Lkg via Mn Stm Tunnel, 17.04-19.04 Hrs
DRAGON	R0833824	9519	05/17/98	Bypass Lkg via Mn Stm Tunnel, 19.04-24 Hrs
DRAGON	R0833825	9520	05/17/98	Bypass Lkg via Mn Stm Tunnel, 24-96 Hrs
DRAGON	R0833826	9521	05/17/98	Bypass Lkg via Mn Stm Tunnel, 96-720 Hrs
DRAGON	R0833827	9522	05/17/98	Bypass Lkg via Radwaste/Reactor Bldg Vent
DRAGON	R0833828	9997	05/17/98	Bypass Lkg via PASS Panel
DRAGON	R0833829	9527	05/17/98	Bypass Lkg via SGTS Bldg, (Drywell)
DRAGON	R0833830	9529	05/17/98	Bypass Lkg via SGTS Bldg, (Wetwell)

Direct Shine From Unit 2

RADIOISOTOPE	R0833001	6161	05/20/98	U2 Secondary Containment Source Term
QADMOD	R0833001	8174	05/21/98	U2 Shine Dose to Unit CR

Unit 1 Filter Shine Dose

RADIOISOTOPE	R0833001	9825	05/17/98	U1 Filter Halogen Source Term
QADMOD	R0833001	8601	05/21/98	U1 CR Filter Shine Dose

External Cloud Dose

RADIOISOTOPE	R0833001	4206	05/19/98	External Cloud Source Term
QADMOD	R0833001	4221	05/19/98	External Cloud Dose

All Computer runs were done on Stone & Webster's main frame computer via a remote terminal.

Ref.

References

1. SWEC Computer Code DRAGON, NU-115, VER05, LEV00.

2. SWEC Computer Code QADMOD, NU-137, VER000, LEV03.

3. RADIOISOTOPE Computer Code, SWEC Number NU-007, Version 1, Level 2..

4. Regulatory Guide 1.3, "Assumptions Used for Evaluating the Potential Radiological Consequences of a Loss Of Coolant Accident for Boiling Water Reactors", Revision 2, June 1974.

5. NUREG-0737, Section III.D.3.4, "Control Room Habitability Requirements."

6. NUREG-0800, U.S. NRC Standard Review Plan Chapter 15.6.5, Appendix A & B.

7. NMPC Letter to NRC, Dated 03/19/84, "Response to TMI Action Item III.D.3.4 - Control Room Habitability."

8. NUREG-0800, Standard Review Plan 6.4, "Control Room Habitability System."

9. GE-NE-187-08-1090, 7/92, "Balance of Plant Summary Report Prepared for Nine Mile Point Nuclear Station - Unit 2 Power Uprate (3467 MWt)".

10. Regulatory Guide 1.49, Rev. 1, 12/73, "Power Levels of Nuclear Power Plants".

11. NMP2 Technical Specifications, Amendment 78.
    a. Section 3.6.1.2-1,
    b. Not used,
    c. Section 3/4.6.1.2 & 6.8.4 and
    d. Table 3.6.1.2-1.

12. Nine Mile Point Unit 1 Final Safety Analysis Report Revision 14.
    a. Section III.B.2., "General Structural Features."

13. Calculation ES-115-02, 5/24/88, "Primary Containment Volume/Area", including:
    a. Disposition ES-115-02A, 9/27/94.

14. SWEC IOC, from P.G. Loza/M.S. Stocknoff to Radiation Protection Group, dated 7/22/82, "Secondary Containment Volume / HVR-32/12177".

Nine Mile Point Nuclear Station Unit: 2 Disposition: N/A

Originator/Date	Checker/Date	Calculation No.	Revision
G.J.Patel (NUCORE)/5-21-98	G.R.Stinson / 5-22-98	H21C-069	00

Ref.

15. Calculation ES-276-00, 12/16/94, "SC Drawdown Analysis - 1 Hour", including:
    a. Disposition ES-276-00B, 2/28/95,
    b. Disposition ES-276-00C, 3/6/95,
    c. Disposition ES-276-00D, 2/15/96 and
    d. Disposition ES-276-00E, 7/1/96.

16. Calculation ES-196-00, 5/30/85, "TIP Line Leakage Rates from LOCA", including:
    a. Supplement 00-SPL-1, 11/22/88 and
    b. Disposition ES-196-00A.

17. Calculation ES-273-00, 6/7/94, "Suppression Pool Bypass Following LOCA".

18. Disposition ES-216-00A, 8/23/94, "Post LOCA Outleakage from CPS Supply & Vent Line Prior to Isolation, Including Delay Time and Plateout Effects".

19. Calculation ES-121-01, 9/30/94, "Large Break Accident Analysis for FSAR Section 6.2.1.1", including:
    a. Disposition ES-121-00A, 10/2/93,
    b. Disposition ES-121-01A, 9/30/94,
    c. Disposition ES-121-01B, 2/8/95,
    d. Disposition ES-121-01C, 3/7/95 and
    e. Disposition ES-121-01E, 5/6/95.

20. Calculation ES-177-05, 10/22/86, "Secondary Containment Bypass Leakage", including:
    a. Supplement 05-SPL-1, 11/22/88,
    b. Supplement 05-SPL-2, 5/9/89,
    c. Disposition ES-177-05A, 9/21/94,
    d. Disposition ES-177-05B, 12/8/94,
    e. Disposition ES-177-05C, 12/8/94,
    f. Disposition ES-177-05D, 3/7/95 and
    g. Disposition ES-177-05E, 7/23/96.

21. Calculation ES-194-01, 10/31/86, "Primary Containment Purge System Secondary Containment Bypass Leakage Rates", including:
    a. Supplement 01-SPL-1, 11/22/88,
    b. Disposition ES-194-01A, 9/21/94 and
    c. Disposition ES-194-01B, 3/7/95.

22. Calculation ES-222-01, 10/28/86, "Bypass Paths Associated with IAS & GSN Systems", including:
    a. Supplement 01-SPL-1, 11/22/88,
    b. Disposition ES-222-01A, 9/21/94 and

Ref.

c. Disposition ES-222-01B, 3/7/95.

23. Calculation PR-C-29-B-00, 7/17/87, "effective Iodine Plateout Factors in Secondary Containment Bypass Leakage Paths Following a DBA LOCA Assuming MSIV Leakage of 9.5 SCFH per MSIV" including:
    a. Supplement 00-SPL-1, 12/22/88.

24. Safety Evaluation No. 95-077, 5/9/95, NMP2, RHS, "Revise /Delete the Leak Rate Acceptance Criteria and Test Frequency for RHS Valves 2RHS*MOV142, MOV149, SOV35A/B and SOV36A/B".

25. NIP-DES-04, Rev. 17, "List of Lists".

26. IST Program Plan, NMP2-IST-001, "Pump and Valve First Ten-Year Inservice Testing Program Plan".

27. Calculation A10.1-E-130-0, 4/29/95, "Maximum Leakage Through 0.250" OD RHS Sample Lines".

28. Standard Review Plan 6.5.5, Rev o, "Pressure Suppression Pool as a Fission Product Cleanup System."

29. "Accident X/Q Values at the Nine Mile Point Unit 1 Control Room Air Intake and Emergency Operations Facility for All Nine Mile Point Unit 2 Release-Building Scenarios", Prepared for Niagara Mohawk Power Corporation by Meteorological Evaluation Services Inc., 5/20/90.

30. Internal Correspondence, File Code M98-014, Dated 5/18/98, From T. Mogren to T. Kulczycky, "Outside Air Flow Rate for Control Room Ventilation."

31. NMPC Emergency Plan Implementing Procedure No. EPIP-EPP-20, Rev 6, "Emergency Notifications."

32. Design Change NI-98-016, Dated 05/17/98, "Unit 1 Control Room Radiological Habitability Analysis."

33. NMPC Calculation No. S10-210-HV12, Rev 0, "Control Room & Auxiliary Control Room."

34. NMPC Calculation No. H21C-038, Rev 1, "Design Basis LOCA with Suppression Pool Scrubbing, Secondary Containment Mixing, and 60 Minute Drawdown."

35. NMPC Calculation No. H21C-043, Rev 1, "Design Basis LOCA with Increased MSIV Leakage, Suppression Pool Scrubbing, Secondary Containment Mixing, and 60 Minute Drawdown."

Ref.

36. NMPC Calculation No. 12177.87-PR(C)-23-B, Rev1, "Skyshine Dose Evaluation Inside the Technical Support Center Following a Loss of Coolant Accident at Unit 2."

37. Nine Mile Point Unit 1 General Floor Plan Drawings:

    a. C-35604-C, Rev 1
    b. C-35605-C, Rev 1
    c. C-35606-C, Rev 2

38. Nine Mile Point Land Use Plan & Site Facility Loyout Drawings:

    a. 12177-EY-2B-3, Rev 3
    b. 12177-EY-3B-13, Rev 12
    c. EY-8S-3

39. Nine Mile Point Unit 1 Floor Plans Alterations & Additions to Admin Bldg Drawings:

    a. 12828-EA-25G, Rev 7
    b. 12828-EA-25GA, Rev 13
    c. 12828-EA-25H, Rev 6
    d. 12828-EA-25HA, Rev 10
    e. 12828-EA-25J, Rev 7
    f. 12828-EA-25L, Rev 6

40. Nine Mile Point Unit1 Turbine Bldg Control Room Plans - Sections - Details Drawings:

    a. C-18810-C, SHT 1, Rev 15
    b. C-18810-C, SHT 3, Rev 8
    c. C-18794-C, Rev 32
    d. C-18815-C, Rev 17
    e. C-18911-C, Rev 9

41. Nine Mile Point Unit 2 Turbine Bldg Plans & Sections Details Drawings:

    a. 12177-EC-7G, Rev 12
    b. 12177-EC-11A, Rev 6
    c. 12177-EC-6H, Rev 6
    d. 12177-EC-6J, Rev 8
    e. 12177-EC-6T, Rev 4

Nine Mile Point Nuclear Station Unit: 2 Disposition: N/A

Originator/Date	Checker/Date	Calculation No.	Revision
G.J.Patel (NUCORE)/5-21-98	G.R.Stinson / 5-22-98	H21C-069	00

Ref.

42. NMPC Calculation No. 12177-PRC-28-E, Rev 2, "Design Basis Loss of Coolant Accident Doses in the Control Room and at EAB and LPZ from all Sources Based on a 6 Minute Drawdown Time and Leakage of 9.5 scfh per MSIV."

43. NMP Unit 2 Machine Location - Reactor Building Drawings:

    a. 12177-EM-2H, Rev 17
    b. 12177-EM-2K, Rev 19
    c. 12177-EM-2L, Rev 12

44. NMPC Alarm Response Procedure No. N1-ARP-H1, Rev 02, "Control Room Panel H1."

45. NMPC Radiation Protection Technical and Analytical Procedure No. N1-RTP-31, Rev 05, "Calibration of General Electrical Area Radiation Monitors."

46. NMPC Emergency Plan Implementing Procedure No. EPIP-EPP-15, Rev 02, "Emergency Health Physics Procedure."

47. Nine Mile Point 2 Roof Framing & Details Reactor Building:

    a. 12177-ES-52D, Rev 6
    b. 12177-ES-52B, Rev 5
    c. 12177-EA-32D, Rev 3

48. Standard Review Plan NUREG-0800, Chapter 6.5.5, "Pressure Suppression Pool as aFission Product Cleanup System, Rev 0, 12/88.

NIAGARA MOHAWK NUCLEAR ENGINEERING	CALCULATION COVER SHEET	Page 1 (Next 2 ____) Total 30 Last 30

NINE MILE POINT NUCLEAR STATION Unit (1, 2 or 0=Both) : _0_ Discipline : HEALTH PHYSICS

Title	Calculation No.			
U1 CONTROL ROOM AIRBORNE DOSES DUE TO LOCA AT UNIT 2 WITH MSIV LEAKAGE OF 9.5 SCFH/MSIV	H21C-069			
	(Sub)system(s)	Building	Floor Elev.	Index No.
	210	TB	277'0"	N/A

Originator(s)
GOPAL J. PATEL (NUCORE CONSULTING SERVICES, INC.)

Checker(s) / Approver(s)
GLENN STINSON/T.G. KULCZYCKY

Rev	Description	Design Change No.	By	Date	Chk	Date	App	Date
00	U1 CR DOSES/U2 LOCA			5/21/98		5/22/98		

Computer Output/Microfilm Filed Separately (Yes / No / NA): No Safety Class (SR / NSR / Qxx) : SR

Superseded Document(s) : S30.0-CR277.A06-U1.210, REV 0

Document Cross Reference(s) - For additional references see page(s) : 103-107

Ref No	Document No.	Doc Type	Index	Sheet	Rev

General Reference(s) :
See Pages 103-107

Remarks :

Confirmation Required (Yes / No) : No See Page(s) : _____	Final Issue Status (APP / FIO / VOI) : APP	File Location (Calc / Hold) : Calc	Operations Acceptance Required (Yes / No) : No

Evaluation Number(s) / Revision : N/R
Copy of Applicability Review Attached (Yes / N/R)?N/R

Component ID(s) / EPN(s) / Line Number(s) :

Key Words : CONTROL ROOM, HABITABILITY

Ref.

APPENDIX A

Card Image Of DRAGON Run #.R0833811, Job # 9497, Dated 05/17/98

```
***** PROGRAM -- DRAGON --- NUIS9.V1.M1.L V00-- 4/30/98 -- *****

* * * * * * * * * CARD IMAGE OF INPUT SUBMITTED TO DRAGON  * * * * * * * * *

CARD COLUMNS          1         2         3         4         5         6         7         8
                 12345678901234567890123456789012345678901234567890123456789012345678901234567890
CARD NO.
    1            PRNMPI CR DOSFS-CONTAINMENT & TIP LEAKAGE, DRAWDOWN,0 TO 1 HR RELEASE 20
    2              0   111  1  111       0     1.0       0       0 0.0246    0.01     1.0
    3            PRIMARY CONTAINMENT        4.9745      0      0      0      00.0122
    4            SECONDARY CONTAINMENT      3.8845      0      0      0      0  1.99      0      0
    5            CONTROL ROOM               1.3145      0      0      0      0 2530.  0.994 0.9937.33-5
    6                3.0840 9.7047 1.3649 1.0445 2.1449 1.0449 8.4847 1.1047
    7                1.9647 2.3547 3.9647 1.1147 2.3947 1.0746 4.5647 6.4747
    8                4.0647 5.5945 8.1746 1.9649 3.6947 2.5347 1.7149 1.6348
    9             1          1.0      0    1.0      0      0    1.0    1.0      1      0      1         0.25
   10             2          1.0      0    1.0    1.0    1.0    1.0    1.0      1      0      1         1.00
   11             3          0.0      0    0.0    1.0    1.0    1.0    1.0      0      0      1         4.00
   12             4          0.0      0    0.0    1.0    1.0    1.0    1.0      0      0      1        24.00
   13             5          0.0      0    0.0    1.0    1.0    1.0    1.0      0      0      1        34.0
   14             6          0.0      0    0.0    1.0    1.0    1.0    1.0      0      0      1       720.0

                 12345678901234567890123456789012345678901234567890123456789012345678901234567890
```

Nine Mile Point Nuclear Station Unit: 2 Disposition: N/A

Originator/Date	Checker/Date	Calculation No.	Revision
G.J.Patel (NUCORE)/5-21-98	G.R.Stinson / 5-22-98	H21C-069	00

Ref.

APPENDIX A

Card Image Of DRAGON Run #.R0833812, Job # 9498, Dated 05/17/98

```
***** PROGRAM --    DRAGON   -- NUIIF.V[illegible].LEV00--  [illegible] -- *****

* * * * * * * * * CARD IMAGE OF INPUT SUBMITTED TO DRAGON   * * * * * * * * *

CARD COLUMNS            1         2         3         4         5         6         7         8
                1234567890123456789012345678901234567890123456789012345678901234567890123456789012345678901234567890
CARD NO.
    1           **NMPI CR DOSES-CONTAINMENT & TIP LEAKAGE. 1 HR - 720 HR
    2             6   111  1  111      0    1.0      0      0 0.0246   0.01    1.0
    3           PRIMARY CONTAINMENT        4.9745     0      0      0     00.0122
    4           SECONDARY CONTAINMENT      3.9745     0      0      0     0  2.97  0.99  0.99
    5           CONTROL ROOM               1.3145     0      0      0     0 9570. 0.004 0.989   1.0
    6               3.0840 9.7047 1.3649 1.9449 2.1449 1.8448 8.8547 1.1047
    7               1.9647 2.3547 3.9447 1.1147 2.3847 1.0746 4.5647 6.4747
    8               3.0647 5.5945 8.1746 1.7648 3.6847 2.5347 1.7149 1.6348
    9            1          1.0      0 0.668      0      0     0.     0.      0      0      1          1.00
   10            2          1.0      0    1.0    1.0    1.0    1.0   1.05.55-5      0      1          2.00
   11            3          1.0      0    1.0    1.0    1.0    1.0   1.05.55-5      0      1          4.00
   12            4          1.0      0    1.0    1.0    1.0    1.0   1.02.56-8      0      1         24.0
   13            5          1.0      0    1.0    1.0    1.0    1.0   1.01.37-5      0      1         96.0
   14            6          1.0      0    1.0    1.0    1.0    1.0   1.07.76-9      0      1        720.0

                1234567890123456789012345678901234567890123456789012345678901234567890123456789012345678901234567890
```

Nine Mile Point Nuclear Station Unit: 2 Disposition: N/A

Originator/Date	Checker/Date	Calculation No.	Revision
G.J.Patel (NUCORE)/5-21-98	G.R.Stinson / 5-22-98	H21C-069	00

Ref.

APPENDIX A

Card Image Of DRAGON Run #.R0833813, Job # 9842, Dated 05/17/98

```
***** PROGRAM --     DRAGON    -- NUIIS.V1.P05.L.V00--   4/30/98 -- *****

* * * * * * * * * CARD IMAGE OF INPUT SUBMITTED TO DRAGON   * * * * * * * * *

CARD COLUMNS            1         2         3         4         5         6         7         8
                 12345678901234567890123456789012345678901234567890123456789012345678901234567890
CARD NO.
    1            **NMP1 CR DOSES-ESF LEAKAGE, 61 GPM, DRAWDOWN, 0 TO 1 HR RELEASE
    2              6   111  1  111      0    1.0       0       0     0.5     0.0     0.0
    3            SUPPRESSION POOL          1.4545      0       0       0     00.0812
    4            SECONDARY CONTAINMENT     3.8946      0       0       0     0  1.0E    0.2      0
    5            CONTROL ROOM              1.3145      0       0       0     0 2530.  0.494  0.9997.32-5
    6                3.0940 0.3047 1.3649 1.7648 2.1449 1.8448 0.8947 1.1047
    7                1.9647 7.3547 3.9647 0.0040 0.0040 0.0040 0.0040 0.0040
    8                0.0040 0.0040 0.0040 0.0040 0.0040 0.0040 0.0040 0.0040
    9             1          1.0      0    1.0      0      0    1.0    1.0      1      0      1        0.25
   10             2          1.0      0    1.0    1.0    1.0    1.0    1.0      1      0      1        1.00
   11             3          0.0      0    0.0    1.0    1.0    1.0    1.0      0      0      1        4.00
   12             4          0.0      0    0.0    1.0    1.0    1.0    1.0      0      0      1        24.0
   13             5          0.0      0    0.0    1.0    1.0    1.0    1.0      0      0      1        34.0
   14             6          0.0      0    0.0    1.0    1.0    1.0    1.0      0      0      1       720.0

                 12345678901234567890123456789012345678901234567890123456789012345678901234567890
```

Nine Mile Point Nuclear Station Unit: 2 Disposition: N/A

Originator/Date	Checker/Date	Calculation No.	Revision
G.J.Patel (NUCORE)/5-21-98	G.R.Stinson / 5-22-98	H21C-069	00

Ref.

APPENDIX A

Card Image Of DRAGON Run #.R0833814, Job # 9501, Dated 05/17/98

```
***** PROGRAM --    DRAGON    -- NUIIS.VERO3.LEV00--  4/30/96 -- *****

* * * * * * * * * CARD IMAGE OF INPUT SUBMITTED TO DRAGON   * * * * * * * * *

CARD COLUMNS            1         2         3         4         5         6         7         8
                1234567890123456789012345678901234567890123456789012345678901234567890123456789012
CARD NO.
    1           **NMP1 CR DOSES-ESF LEAKAGE, 61 GPM, POST-DRAWDOWN RELEASE 1-720 HRS
    2             6   111  1  111       0     1.0       0       0    0.05     0.0     0.0
    3           SUPPRESSION POOL          1.4E+5      0       0       0      00.0910
    4           SECONDARY CONTAINMENT     3.8E+4      0       0       0       0  2.97  0.90      0
    5           CONTROL ROOM              1.3E+5      0       0       0       0 2530. 0.994 0.999    1.0
    6               3.0E+0 9.3E+7 1.3E+8 1.2E+8 2.1E+8 1.8E+8 8.8E+7 1.1E+7
    7               1.9E+7 2.3E+7 3.9E+7 0.0E+0 0.0E+0 0.0E+0 0.0E+0 0.0E+0
    8               0.0E+0 0.0E+0 0.0E+0 0.0E+0 0.0E+0 0.0E+0 0.0E+0 0.0E+0
    9            1          1.0      0 0.668      0       0    0.0    0.0      0      0      1        1.00
   10            2          1.0      0    1.0    1.0    1.0    1.0   1.05.55-5      0      1        2.00
   11            3          1.0      0    1.0    1.0    1.0    1.0   1.05.55-5      0      1        9.00
   12            4          1.0      0    1.0    1.0    1.0    1.0   1.02.56-8      0      1       24.0
   13            5          1.0      0    1.0    1.0    1.0    1.0   1.01.37-8      0      1       96.0
   14            6          1.0      0    1.0    1.0    1.0    1.0   1.07.76-9      0      1      720.0

                1234567890123456789012345678901234567890123456789012345678901234567890123456789012
```

Nine Mile Point Nuclear Station Unit: 2 Disposition: N/A

Originator/Date	Checker/Date	Calculation No.	Revision
G.J.Patel (NUCORE)/5-21-98	G.R.Stinson / 5-22-98	H21C-069	00

Ref.

APPENDIX A

Card Image Of DRAGON Run #.R0833815, Job # 9502, Dated 05/17/98

```
***** PROGRAM --    DRAGON    -- NU115.V2P05.LEV00--   4/30/95 -- *****

* * * * * * * * * CARD IMAGE OF INPUT SUBMITTED TO DRAGON   * * * * * * * * *

CARD COLUMNS            1         2         3         4         5         6         7         8
                12345678901234567890123456789012345678901234567890123456789012345678901234567890
CARD NO.
    1           **NMPI CR DOSES-PRESSURE CONTROL MODE PURGE, SUPPLY LINES
    2             6   101  1  111       0     1.0       0       0 1.11-5 4.58-6 4.58-4
    3           PRIMARY CONTAINMENT          4.97+5      0       0       0      02.0E+5  0.99  0.99
    4           CONTROL ROOM                 1.31+5      0       0       0      0 2530.  0.994 0.9975.35-5
    5               3.08+0 9.30+7 1.36+8 1.94+5 2.14+5 1.84+8 8.89+7 1.10+7
    6               1.96+7 2.35+7 3.96+7 1.11+7 2.39+7 1.07+6 4.56+7 6.87+7
    7               3.06+7 5.59+5 8.17+8 1.36+8 3.69+7 2.53+7 1.71+9 1.63+8
    8          1          1.0      0    0.0      0      0    1.0    1.0      1      0      1        0.25
    9          2          1.0      0    0.0    1.0    1.0    1.0    1.0      1      0      1        1.00
   10          3          0.0      0    0.0    1.0    1.0    1.0    1.0      0      0      1        5.00
   11          4          0.0      0    0.0    1.0    1.0    1.0    1.0      0      0      1        24.0
   12          5          0.0      0    0.0    1.0    1.0    1.0    1.0      0      0      1        95.0
   13          6          0.0      0    0.0    1.0    1.0    1.0    1.0      0      0      1       720.0

                12345678901234567890123456789012345678901234567890123456789012345678901234567890
```

NIAGARA MOHAWK NUCLEAR ENGINEERING	CALCULATION CONTINUATION SHEET	Page 113 (Next ____)

Nine Mile Point Nuclear Station Unit: 2 Disposition: N/A

Originator/Date	Checker/Date	Calculation No.	Revision
G.J.Patel (NUCORE)/5-21-98	G.R.Stinson / 5-22-98	H21C-069	00

Ref.

APPENDIX A

Card Image Of DRAGON Run #.R0833816, Job # 9531, Dated 05/17/98

```
***** PROGRAM --     DRAGON    -- NUIIS.VERS.LEVOO--   6/15/00 -- *****

* * * * * * * * * CARD IMAGE OF INPUT SUBMITTED TO DRAGON   * * * * * * * * *

CARD COLUMNS            1         2         3         4         5         6         7         8
                 12345678901234567890123456789012345678901234567890123456789012345678901234567890
CARD NO.                                                      SUPPLY
     1           **NMP1 CR DOSES-PRESSURE CONTROL MODE PURGE (SUP) LINES
     2             6   101  1    11       0     1.0       0       0 3.14-7 1.29-7 1.29-5
     3           PRIMARY CONTAINMENT          4.97+5      0       0       0      02.0E+5      0     0
     4           CONTROL ROOM                 1.31+5      0       0       0      0 2530. 0.894 0.8095.59-5
     5               3.08+0 9.30+7 1.36+8 1.94+8 2.14+8 1.94+8 8.09+7 1.10+7
     6               1.96+7 7.35+7 3.96+7 1.11+7 2.38+7 1.07+6 4.56+7 6.47+7
     7               9.06+7 5.59+5 8.17+6 1.96+8 3.68+7 2.53+7 1.71+8 1.63+8
     8          1          1.0      0    0.0      0      0    1.0    1.0      1      0      1          0.25
     9          2          1.0      0    0.0    1.0    1.0    1.0    1.0      1      0      1          1.00
    10          3          0.0      0    0.0    1.0    1.0    1.0    1.0      0      0      1          5.00
    11          4          0.0      0    0.0    1.0    1.0    1.0    1.0      0      0      1         24.0
    12          5          0.0      0    0.0    1.0    1.0    1.0    1.0      0      0      1         96.0
    13          6          0.0      0    0.0    1.0    1.0    1.0    1.0      0      0      1        720.0

                 12345678901234567890123456789012345678901234567890123456789012345678901234567890
```

Nine Mile Point Nuclear Station Unit: 2 Disposition: N/A

Originator/Date	Checker/Date	Calculation No.	Revision
G.J.Patel (NUCORE)/5-21-98	G.R.Stinson / 5-22-98	H21C-069	00

Ref.

APPENDIX A

Card Image Of DRAGON Run #.R0833817, Job # 9564, Dated 05/17/98

```
***** DRAGRAM --    DRAGON    -- NU115.V5P05.L5V00--  4/30/96 -- *****

* * * * * * * * * CARD IMAGE OF INPUT SUBMITTED TO DRAGON   * * * * * * * * *

CARD COLUMNS              1         2         3         4         5         6         7         8
                 12345678901234567890123456789012345678901234567890123456789012345678901234567890
CARD NO.
    1            **NMPI CR DOSES-BYPASS LEAKAGE VIA MAIN STEAM TUNNEL 0-6.86 HRS
    2              6   101  1  111       0     1.0       0       0 0.0246    0.01     1.0
    3            DRYWELL                     3.0E+5     0     0     0     0   1.0 0.989  0.0
    4            CONTROL ROOM                1.7E+5     0     0     0     0 2530. 0.994 0.9999.55-5
    5                3.0E+0 9.7E+7 1.3E+8 1.9E+9 2.1E+8 1.9E+8 8.8E+7 1.1E+7
    6                1.9E+7 2.3E+7 3.9E+7 1.1E+7 2.3E+7 1.0E+6 4.5E+7 6.4E+7
    7                5.0E+7 5.5E+5 8.1E+6 1.0E+8 3.6E+7 2.9E+7 1.7E+8 1.6E+8
    8             1       1.91-5     0   0.0     0     0   1.0   1.0     1     0     1        0.25
    9             2       1.91-5     0   0.0   1.0   1.0   1.0   1.0     1     0     1        6.66
   10             3          0.0     0   0.0   1.0   1.0   1.0   1.0     0     0     1        9.00
   11             4          0.0     0   0.0   1.0   1.0   1.0   1.0     0     0     1        24.0
   12             5          0.0     0   0.0   1.0   1.0   1.0   1.0     0     0     1        96.0
   13             6          0.0     0   0.0   1.0   1.0   1.0   1.0     0     0     1       720.0
   14             7          0.0     0   0.0   1.0   1.0   1.0   1.0     0     0     1       727.0

                 12345678901234567890123456789012345678901234567890123456789012345678901234567890
```

Nine Mile Point Nuclear Station Unit: 2 Disposition: N/A

Originator/Date	Checker/Date	Calculation No.	Revision
G.J.Patel (NUCORE)/5-21-98	G.R.Stinson / 5-22-98	H21C-069	00

Ref.

APPENDIX A

Card Image Of DRAGON Run #.R0833818. Job # 9626, Dated 05/17/98

```
***** PROGRAM --    DRAGON    -- NU115.VC905.LEV00--  4/20/10 -- *****

* * * * * * * * * CARD IMAGE OF INPUT SUBMITTED TO DRAGON   * * * * * * * *

CARD COLUMNS              1         2         3         4         5         6         7         8
                 12345678901234567890123456789012345678901234567890123456789012345678901234567890
CARD NO.
     1           **NMP1 CR DOSES-BYPASS LEAKAGE VIA MAIN STEAM TUNNEL 6.86 - 4.0 MPS
     2             5   101  1  111      0    1.0      0      0 0.0245    0.01    1.0
     3           DRYWELL                    3.06+5     0      0      0      0   1.0 0.297  0.0
     4           CONTROL ROOM               1.31+5     0      0      0      0 2530. 0.904 0.4933.5E-5
     5               3.09+0 9.30+7 1.34+8 1.04+8 2.14+8 1.84+8 8.85+7 1.10+7
     6               1.96+7 2.35+7 3.96+7 1.11+7 2.39+7 1.07+6 4.56+7 6.47+7
     7               8.06+7 5.59+5 8.17+6 1.96+9 3.69+7 2.53+7 1.71+8 1.63+8
     8          1       1.91-5     0   0.0    1.0    1.0    1.0    1.0      0      0      1         9.86
     9          2       6.15-5     0   0.0    1.0    1.0    1.0    1.0      1      0      1         9.00
    10          3          0.0     0   0.0    1.0    1.0    1.0    1.0      0      0      1         28.0
    11          4          0.0     0   0.0    1.0    1.0    1.0    1.0      0      0      1         34.0
    12          5          0.0     0   0.0    1.0    1.0    1.0    1.0      0      0      1        720.0

                 12345678901234567890123456789012345678901234567890123456789012345678901234567890
```

Nine Mile Point Nuclear Station Unit: 2 Disposition: N/A

Originator/Date	Checker/Date	Calculation No.	Revision
G.J.Patel (NUCORE)/5-21-98	G.R.Stinson / 5-22-98	H21C-069	00

Ref.

APPENDIX A

Card Image Of DRAGON Run #.R0833819, Job # 9513, Dated 05/17/98

```
***** PROGRAM --    DRAGON    -- NUI15.VER05.LEV00--  4/30/96 -- *****

* * * * * * * * * CARD IMAGE OF INPUT SUBMITTED TO DRAGON   * * * * * * * *

CARD COLUMNS              1         2         3         4         5         6         7         8
                 12345678901234567890123456789012345678901234567890123456789012345678901234567890
CARD NO.
    1            *NNMPI CR DOSES-BYPASS LEAKAGE VIA MAIN STEAM TUNNEL 9.0 - 9.61  HRS
    2              6   101  1  111       0    1.0       0       0 0.0746    0.01     1.0
    3            DRYWELL                    3.06+5      0       0       0       0    1.0    1.0   0.0
    4            CONTROL ROOM               1.31+5      0       0       0       0 2530.  0.994 0.4176.05-5
    5                3.08+0 9.30+7 1.36+8 1.94+8 2.14+8 1.94+8 8.88+7 1.10+7
    6                1.96+7 2.35+7 3.96+7 1.11+7 2.39+7 1.07+6 4.56+7 6.47+7
    7                5.06+7 5.59+5 8.17+6 1.96+8 3.69+7 2.53+7 1.71+8 1.83+8
    8             1       1.91-5      0   0.0      0      0   0.0   0.0      0      0      1          6.86
    9             2       6.15-5      0   0.0      0      0   0.0   0.0      0      0      1          9.00
   10             3       6.14-5      0   0.0    1.0    1.0   1.0   1.0      1      0      1          9.61
   11             4          0.0      0   0.0    1.0    1.0   1.0   1.0      0      0      1         24.0
   12             5          0.0      0   0.0    1.0    1.0   1.0   1.0      0      0      1         96.0
   13             6          0.0      0   0.0    1.0    1.0   1.0   1.0      0      0      1        720.0

                 12345678901234567890123456789012345678901234567890123456789012345678901234567890
```

NIAGARA MOHAWK NUCLEAR ENGINEERING	CALCULATION CONTINUATION SHEET	Page 117 (Next ____)

Nine Mile Point Nuclear Station Unit: 2 Disposition: N/A

Originator/Date	Checker/Date	Calculation No.	Revision
G.J.Patel (NUCORE)/5-21-98	G.R.Stinson / 5-22-98	H21C-069	00

Ref.

APPENDIX A

Card Image Of DRAGON Run #.R0833820, Job # 9514, Dated 05/17/98

```
***** PROGRAM --    DRAGON    -- NULIS.VERDS.LEV00--  4/30/95 -- *****

* * * * * * * * * CARD IMAGE OF INPUT SUBMITTED TO DRAGON   * * * * * * * * *

CARD COLUMNS            1         2         3         4         5         6         7         8
                12345678901234567890123456789012345678901234567890123456789012345678901234567890
CARD NO.
     1          *NMP1 CR DOSES-BYPASS LEAKAGE VIA MAIN STEAM TUNNEL 9.61 - 13.09 HRS
     2            7   101  1  111       0     1.0       0       0 0.0246    0.01     1.0
     3          DRYWELL                     3.06+5     0       0       0       0   1.0 0.995  0.0
     4          CONTROL ROOM                1.31+5     0       0       0       0 2530. 0.894 0.8896.95-5
     5              3.08+0 9.30+7 1.36+8 1.94+8 2.14+8 1.99+8 8.89+7 1.10+7
     6              1.96+7 2.35+7 3.96+7 1.11+7 2.38+7 1.07+6 4.56+7 6.47+7
     7              9.06+7 5.59+5 8.17+6 1.96+8 3.68+7 2.53+7 1.71+8 1.63+8
     8          1       1.91-5     0   0.0     0     0   0.0   0.0     0     0     1         6.86
     9          2       6.15-5     0   0.0     0     0   0.0   0.0     0     0     1         8.00
    10          3       6.14-5     0   0.0     0     0   0.0   0.0     0     0     1         9.61
    11          4       3.37-4     0   0.0   1.0   1.0   1.0   1.0     1     0     1        13.09
    12          5          0.0     0   0.0   1.0   1.0   1.0   1.0     0     0     1        24.0
    13          6          0.0     0   0.0   1.0   1.0   1.0   1.0     0     0     1        96.0
    14          7          0.0     0   0.0   1.0   1.0   1.0   1.0     0     0     1       720.0

                12345678901234567890123456789012345678901234567890123456789012345678901234567890
```

NIAGARA MOHAWK
NUCLEAR ENGINEERING

CALCULATION CONTINUATION SHEET

Nine Mile Point Nuclear Station Unit: 2 Disposition/A

Originator/Date	Checker/Date	Calculation No.	Revision
G.J.Patel (NUCORE)/5-21-98	G.R.Stinson / 5-22-98	H21C-069	0

Ref.

APPENDIX A

Card Image Of DRAGON Run #.R0833821, Job # 9515, Dated 05/17/98

```
***** PROGRAM --    DRAGON    -- NUIIF.V.90?.LEVOO--  4/30/9[illegible] -- *****

* * * * * * * * * CARD IMAGE OF INPUT SUBMITTED TO DRAGON   * * * * * * * *

CARD COLUMNS              1         2         3         4         5         6         7
                 12345678901234567890123456789012345678901234567890123456789012345678901234[illegible]
CARD NO.
    1            **NMP1 CR DOSES-BYPASS LEAKAGE VIA MAIN STEAM TUNNEL 13.09 - 14.4  MRS
    2              8   101  1  111       0     1.0       0       0 0.0266    0.01     1.0
    3            DRYWELL                        3.0645      0       0       0       0   1.0 0.935  0.0
    4            CONTROL ROOM                   1.3145      0       0       0       0 2530. 0.494 0.4896.45-5
    5                3.0840 9.3047 1.3648 1.9448 2.1449 1.9448 8.8847 1.1047
    6                1.0647 2.3547 3.9647 1.1147 2.3847 1.0746 4.5647 6.4747
    7                8.0647 5.5945 8.1745 1.9648 3.6847 2.5347 1.7148 1.6348
    8             1      1.91-5      0    0.0      0      0    0.0    0.0      0      0      1         5.86
    9             2      6.15-5      0    0.0      0      0    0.0    0.0      0      0      1         5.00
   10             3      6.14-5      0    0.0      0      0    0.0    0.0      0      0      1         3.61
   11             4      3.37-4      0    0.0      0      0    0.0    0.0      0      0      1        13.09
   12             5      3.37-4      0    0.0    1.0    1.0    1.0    1.0      1      0      1        14.40
   13             6         0.0      0    0.0    1.0    1.0    1.0    1.0      0      0      1         24.0
   14             7         0.0      0    0.0    1.0    1.0    1.0    1.0      0      0      1         94.0
   15             8         0.0      0    0.0    1.0    1.0    1.0    1.0      0      0      1        720.0

                 12345678901234567890123456789012345678901234567890123456789012345678901234567890
```

Ref.

APPENDIX A

Card Image Of DRAGON Run #.R0833822, Job # 9516, Dated 05/17/98

```
***** PROGRAM --    DRAGON    -- NU115.V5705.LEV00--  4/30/98 -- *****

* * * * * * * * * CARD IMAGE OF INPUT SUBMITTED TO DRAGON   * * * * * * * * *

CARD COLUMNS              1         2         3         4         5         6         7         8
                 12345678901234567890123456789012345678901234567890123456789012345678901234567890
CARD NO.
     1           **NMP1 CR DOSES-BYPASS LEAKAGE VIA MAIN STEAM TUNNEL 16.4 - 17.04 HRS
     2             9   101  1  111       0     1.0       0       0 0.0246    0.01     1.0
     3           DRYWELL                     3.06+5     0       0       0       0   1.0 0.774  0.0
     4           CONTROL ROOM                1.31+5     0       0       0       0 7530. 0.894 0.9996.35-5
     5               3.08+0 9.30+7 1.36+8 1.74+8 2.14+8 1.84+8 8.88+7 1.10+7
     6               1.96+7 2.35+7 3.96+7 1.11+7 2.38+7 1.07+6 4.56+7 6.47+7
     7               9.06+7 5.59+5 8.17+6 1.96+8 3.68+7 2.53+7 1.71+8 1.63+8
     8            1      1.91-5     0    0.0      0      0    0.0    0.0      0      0      1        6.84
     9            2      6.15-5     0    0.0      0      0    0.0    0.0      0      0      1        8.00
    10            3      6.14-5     0    0.0      0      0    0.0    0.0      0      0      1        9.61
    11            4      3.37-4     0    0.0      0      0    0.0    0.0      0      0      1       13.09
    12            5      3.37-4     0    0.0      0      0    0.0    0.0      0      0      1       16.40
    13            6      6.17-4     0    0.0    1.0    1.0    1.0    1.0      1      0      1       17.04
    14            7         0.0     0    0.0    1.0    1.0    1.0    1.0      0      0      1        24.0
    15            8         0.0     0    0.0    1.0    1.0    1.0    1.0      0      0      1        34.0
    16            9         0.0     0    0.0    1.0    1.0    1.0    1.0      0      0      1       720.0

                 12345678901234567890123456789012345678901234567890123456789012345678901234567890
```

Nine Mile Point Nuclear Station Unit: 2 Disposition: N/A

Originator/Date	Checker/Date	Calculation No.	Revision
G.J.Patel (NUCORE)/5-21-98	G.R.Stinson / 5-22-98	H21C-069	00

Ref.

APPENDIX A

Card Image Of DRAGON Run #.R0833823, Job # 9517, Dated 05/17/98

```
***** PROGRAM --    DRAGON    -- NU113.VERO5.LEV00--  6/30/96 -- *****

* * * * * * * * * CARD IMAGE OF INPUT SUBMITTED TO DRAGON   * * * * * * * * *

CARD COLUMNS              1         2         3         4         5         6         7         8
                 12345678901234567890123456789012345678901234567890123456789012345678901234567890
CARD NO.
     1           **NMP1 CR DOSES-BYPASS LEAKAGE VIA MAIN STEAM TUNNEL 17.04 -19.04 HRS
     2            10   101  1  111      0    1.0      0      0 0.0246   0.01    1.0
     3           DRYWELL                   3.06+5     0      0      0      0   1.0 0.942  0.0
     4           CONTROL ROOM              1.31+5     0      0      0      0 2530. 0.994 0.9996.95-5
     5               3.08+0 9.30+7 1.36+8 1.94+9 2.14+8 1.84+8 6.88+7 1.10+7
     6               1.96+7 2.35+7 3.96+7 1.11+7 2.38+7 1.07+6 4.56+7 6.47+7
     7               6.06+7 5.59+5 8.17+6 1.96+8 3.69+7 2.53+7 1.71+8 1.63+8
     8            1      1.91-5     0   0.0      0      0   0.0   0.0      0      0      1        6.86
     9            2      6.19-5     0   0.0      0      0   0.0   0.0      0      0      1        8.00
    10            3      6.14-5     0   0.0      0      0   0.0   0.0      0      0      1        9.61
    11            4      3.37-4     0   0.0      0      0   0.0   0.0      0      0      1       13.09
    12            5      3.37-4     0   0.0      0      0   0.0   0.0      0      0      1       14.40
    13            6      6.17-4     0   0.0      0      0   0.0   0.0      0      0      1       17.04
    14            7      6.75-4     0   0.0    1.0    1.0   1.0   1.0      1      0      1       19.04
    15            8         0.0     0   0.0    1.0    1.0   1.0   1.0      0      0      1        24.0
    16            9         0.0     0   0.0    1.0    1.0   1.0   1.0      0      0      1        24.0
    17           10         0.0     0   0.0    1.0    1.0   1.0   1.0      0      0      1       720.0

                 12345678901234567890123456789012345678901234567890123456789012345678901234567890
```

Nine Mile Point Nuclear Station Unit: 2 Disposition: N/A

Originator/Date	Checker/Date	Calculation No.	Revision
G.J.Patel (NUCORE)/5-21-98	G.R.Stinson / 5-22-98	H21C-069	00

Ref.

APPENDIX A

Card Image Of DRAGON Run #.R0833825, Job # 9520, Dated 05/17/98

```
***** PROGRAM --    DRAGON    -- NU115.V2905.LEV00--  4/30/96 -- *****

* * * * * * * * * CARD IMAGE OF INPUT SUBMITTED TO DRAGON   * * * * * * * * *

CARD COLUMNS              1         2         3         4         5         6         7         8
                 12345678901234567890123456789012345678901234567890123456789012345678901234567890
CARD NO.
    1            *RNMPI CR DOSES-BYPASS LEAKAGE VIA MAIN STEAM TUNNEL  24.0 - 96.0 HRS
    2             10   1011 1    11       0    1.0       0       0 0.0246   0.01    1.0
    3            DRYWELL                     3.0+5      0      0      0      0   1.0 0.958  0.0
    4            CONTROL ROOM                1.3+5      0      0      0      0 2530. 0.894 0.8092.09-5
    5                3.0+0 9.30+7 1.36+8 1.9+5 2.14+8 1.84+8 8.89+7 1.10+7
    6                1.96+7 2.35+7 3.96+7 1.11+7 2.38+7 1.07+6 4.55+7 6.47+7
    7                5.06+7 5.59+5 8.17+6 1.96+8 3.69+7 2.53+7 1.71+8 1.63+8
    8             1       1.91-5      0   0.0      0      0   0.0   0.0      0      0      1         6.84
    9             2       6.15-5      0   0.0      0      0   0.0   0.0      0      0      1         8.00
   10             3       6.14-5      0   0.0      0      0   0.0   0.0      0      0      1         9.61
   11             4       3.37-4      0   0.0      0      0   0.0   0.0      0      0      1        13.09
   12             5       3.37-4      0   0.0      0      0   0.0   0.0      0      0      1        14.40
   13             6       6.17-4      0   0.0      0      0   0.0   0.0      0      0      1        17.04
   14             7       6.75-4      0   0.0    0.0    0.0   0.0   0.0      0      0      1        19.04
   15             8       1.33-3      0   0.0    0.0    0.0   0.0   0.0      0      0      1         24.0
   16             9       1.24-3      0   0.0    1.0    1.0   1.0   1.0      1      0      1         96.0
   17            10          0.0      0   0.0    1.0    1.0   1.0   1.0      0      0      1        720.0

                 12345678901234567890123456789012345678901234567890123456789012345678901234567890
```

Nine Mile Point Nuclear Station Unit: 2 Disposition: N/A

Originator/Date	Checker/Date	Calculation No.	Revision
G.J.Patel (NUCORE)/5-21-98	G.R.Stinson / 5-22-98	H21C-069	00

Ref.

APPENDIX A

Card Image Of DRAGON Run #.R0833826, Job # 9521, Dated 05/17/98

```
***** PROGRAM --    DRAGON    -- NU115.V2705.LEV00--   4/30/96 -- *****

* * * * * * * * * CARD IMAGE OF INPUT SUBMITTED TO DRAGON   * * * * * * * * *

CARD COLUMNS            1         2         3         4         5         6         7         8
                1234567890123456789012345678901234567890123456789012345678901234567890123456789 0
CARD NO.
    1           **NMP1 CR DOSES-BYPASS LEAKAGE VIA MAIN STEAM TUNNEL  96.0 - 720. HRS
    2            10   1011 1    11       0    1.0       0       0 0.0245    0.01     1.0
    3           DRYWELL                    3.06+5      0      0      0      0    1.0    1.0   0.0
    4           CONTROL ROOM               1.31+5      0      0      0      0 2530.  0.894 0.9805.17-6
    5               3.08+0 9.30+7 1.36+8 1.74+8 2.14+8 1.84+8 8.89+7 1.10+7
    6               1.96+7 2.35+7 3.96+7 1.11+7 2.39+7 1.07+6 4.55+7 6.47+7
    7               8.06+7 5.59+5 8.17+6 1.96+8 3.69+7 2.53+7 1.71+8 1.63+8
    8            1       1.91-5      0    0.0      0      0    0.0    0.0      0      0      1        6.85
    9            2       6.15-5      0    0.0      0      0    0.0    0.0      0      0      1        9.00
   10            3       6.14-5      0    0.0      0      0    0.0    0.0      0      0      1        9.61
   11            4       3.37-4      0    0.0      0      0    0.0    0.0      0      0      1       13.09
   12            5       3.37-4      0    0.0      0      0    0.0    0.0      0      0      1       14.40
   13            6       6.17-4      0    0.0      0      0    0.0    0.0      0      0      1       17.04
   14            7       6.75-4      0    0.0      0      0      0      0      0      0      1       19.04
   15            8       1.33-3      0    0.0      0      0      0      0      0      0      1        24.0
   16            9       1.24-3      0    0.0      0      0      0      0      0      0      1        34.0
   17           10       9.39-4      0    0.0    1.0    1.0    1.0    1.0      1      0      1       720.0

                1234567890123456789012345678901234567890123456789012345678901234567890123456789 0
```

Nine Mile Point Nuclear Station Unit: 2 Disposition: N/A

Originator/Date	Checker/Date	Calculation No.	Revision
G.J.Patel (NUCORE)/5-21-98	G.R.Stinson / 5-22-98	H21C-069	00

Ref.

APPENDIX A

Card Image Of DRAGON Run #.R0833827, Job # 9522, Dated 05/17/98

```
***** PROGRAM --     DRAGON    -- NULIS.VIRGS.LEVOO--   4/30/95 -- *****

* * * * * * * * * CARD IMAGE OF INPUT SUBMITTED TO DRAGON   * * * * * * * * *

CARD COLUMNS              1         2         3         4         5         6         7         8
                 12345678901234567890123456789012345678901234567890123456789012345678901234567890
CARD NO.
    1            **NMP1 CR DOSES-BYPASS LEAKAGE VIA RADWASTE/REACTOR BLDG VENT
    2              8   101  1  111       0     1.0       0       0 0.0244    0.01     1.0
    3            DRYWELL                        3.06+5      0       0       0       0   1.0    1.0   0.0
    4            CONTROL ROOM                   1.31+5      0       0       0       0 2530.  0.994 0.889    1.0
    5                3.08+0 9.30+7 1.38+8 1.04+8 2.14+8 1.84+8 8.88+7 1.10+7
    6                1.96+7 2.35+7 3.96+7 1.11+7 2.38+7 1.07+6 4.56+7 6.47+7
    7                8.06+7 5.59+5 8.17+4 1.96+8 3.68+7 2.53+7 1.71+8 1.63+8
    8             1        0.0      0    0.0      0      0    0.0    0.0      0      0      1          1.32
    9             2      1.44-5     0    0.0    1.0    1.0    1.0   1.07.92-5   0      1          1.71
   10             3      4.30-5     0    0.0    1.0    1.0    1.0   1.07.92-5   0      1          2.67
   11             4      6.44-5     0    0.0    1.0    1.0    1.0   1.07.92-5   0      1          3.05
   12             5      1.07-4     0    0.0    1.0    1.0    1.0   1.07.92-5   0      1          8.00
   13             6      1.08-4     0    0.0    1.0    1.0    1.0   1.05.71-5   0      1         24.09
   14             7      9.95-5     0    0.0    1.0    1.0    1.0   1.01.68-5   0      1         94.0
   15             8      7.46-5     0    0.0    1.0    1.0    1.0   1.04.05-6   0      1        720.0

                 12345678901234567890123456789012345678901234567890123456789012345678901234567890
```

Nine Mile Point Nuclear Station Unit: 2 Disposition: N/A

Originator/Date	Checker/Date	Calculation No.	Revision
G.J.Patel (NUCORE)/5-21-98	G.R.Stinson / 5-22-98	H21C-069	00

Ref.

APPENDIX A

Card Image Of DRAGON Run #.R0833828, Job # 9997, Dated 05/17/98

```
***** PROGRAM --    DRAGON    -- NU115.V:R05.LEV00--  4/30/96 -- *****

* * * * * * * * * CARD IMAGE OF INPUT SUBMITTED TO DRAGON   * * * * * * * * *

CARD COLUMNS              1         2         3         4         5         6         7         8
                 12345678901234567890123456789012345678901234567890123456789012345678901234567890
CARD NO.
     1           **NMPI CR DOSES-DYPASS LEAKAGE VIA PASS PANEL
     2             6   101  1  111      0    1.0      0      0 0.0245   0.01    1.0
     3           DRYWELL                   3.0+5      0      0      0      0   1.0    1.0   0.0
     4           CONTROL ROOM              1.3+5      0      0      0      0 7530.  0.494 0.993    1.0
     5               3.0+0 9.3+7 1.3+9 1.0+8 2.1+8 1.9+9 8.8+7 1.1+7
     6               1.9+7 2.3+7 3.0+7 1.1+7 2.3+7 1.0+6 4.5+7 6.4+7
     7               4.0+7 5.5+5 8.1+6 1.9+8 3.6+7 2.5+7 1.7+8 1.6+8
     8          1       2.20-5      0    0.0      0      0    1.0   1.01.48-4      0      1        0.25
     9          2       2.20-5      0    0.0    1.0    1.0    1.0   1.01.48-4      0      1         2.0
    10          3       2.20-5      0    0.0    1.0    1.0    1.0   1.01.48-4      0      1         4.0
    11          4       2.15-5      0    0.0    1.0    1.0    1.0   1.01.07-4      0      1        24.0
    12          5       2.00-5      0    0.0    1.0    1.0    1.0   1.03.20-5      0      1        34.0
    13          6       1.49-5      0    0.0    1.0    1.0    1.0   1.07.83-6      0      1       720.0

                 12345678901234567890123456789012345678901234567890123456789012345678901234567890
```

Nine Mile Point Nuclear Station Unit: 2 Disposition: N/A

Originator/Date	Checker/Date	Calculation No.	Revision
G.J.Patel (NUCORE)/5-21-98	G.R.Stinson / 5-22-98	H21C-069	00

Ref.

APPENDIX A

Card Image Of DRAGON Run #.R0833829, Job # 9527, Dated 05/17/98

```
***** PROGRAM --    DRAGON    -- NUTIS.VERDS.LEVOO-- 4/30/98 -- *****

* * * * * * * * * CARD IMAGE OF INPUT SUBMITTED TO DRAGON   * * * * * * * * *

CARD COLUMNS              1         2         3         4         5         6         7         8
                 12345678901234567890123456789012345678901234567890123456789012345678901234567890
CARD NO.
    1            **NMPI CR DOSES-BYPASS LEAKAGE VIA SGTS BUILDING (DRYWELL)
    2              R   101  1  111       0    1.0       0       0 0.0246    0.01     1.0
    3            DRYWELL                     3.06+5     0       0       0       0   1.0    1.0   0.0
    4            CONTROL ROOM                1.31+5     0       0       0       0 2530.  0.894 0.989    1.0
    5                3.08+0 9.30+7 1.36+8 1.94+8 2.14+8 1.84+8 8.89+7 1.10+7
    6                1.96+7 2.35+7 3.95+7 1.11+7 2.38+7 1.07+6 4.56+7 6.47+7
    7                9.06+7 5.59+5 8.17+6 1.96+8 3.69+7 2.53+7 1.71+9 1.63+8
    8             1        0      0    0.0      0      0      0      0      0      1          0.83
    9             2     1.44-5    0    0.0    1.0    1.0    1.0   1.01.49-4    0      1          0.90
   10             3     5.77-5    0    0.0    1.0    1.0    1.0   1.01.49-4    0      1          1.34
   11             4     1.40-4    0    0.0    1.0    1.0    1.0   1.01.49-4    0      1          9.0
   12             5     1.40-4    0    0.0    1.0    1.0    1.0   1.01.10-4    0      1         10.58
   13             6     2.40-4    0    0.0    1.0    1.0    1.0   1.01.10-4    0      1         24.0
   14             7     2.23-4    0    0.0    1.0    1.0    1.0   1.03.36-5    0      1         96.0
   15             8     1.67-4    0    0.0    1.0    1.0    1.0   1.08.55-6    0      1        720.0

                 12345678901234567890123456789012345678901234567890123456789012345678901234567890
```

Nine Mile Point Nuclear Station Unit: 2 Disposition: N/A

Originator/Date	Checker/Date	Calculation No.	Revision
G.J.Patel (NUCORE)/5-21-98	G.R.Stinson / 5-22-98	H21C-069	00

Ref.

APPENDIX A

Card Image Of DRAGON Run #.R0833830, Job # 9529, Dated 05/17/98

```
***** PROGRAM --    DRAGON    -- NU115.VER05.LEV00--  4/30/96 -- *****

* * * * * * * * * CARD IMAGE OF INPUT SUBMITTED TO DRAGON   * * * * * * * * *

CARD COLUMNS              1         2         3         4         5         6         7         8
                 12345678901234567890123456789012345678901234567890123456789012345678901234567890
CARD NO.
    1            *ANMPL CR DOSES-BYPASS LEAKAGE VIA SGTS BUILDING (PRIMARY CONTAINMENT)
    2              7   101  1  111       0     1.0       0       0 0.0246    0.01     1.0
    3            PRIMARY CONTAINMENT        4.97+5      0      0      0      0   1.0    1.0  0.0
    4            CONTROL ROOM               1.31+5      0      0      0      0 2530.  0.994 0.489    1.0
    5                3.09+0 9.30+7 1.36+8 1.94+8 2.14+8 1.84+8 8.88+7 1.10+7
    6                1.96+7 2.35+7 3.96+7 1.11+7 2.38+7 1.07+6 4.56+7 6.87+7
    7                8.06+7 5.59+5 8.17+6 1.96+4 3.68+7 2.53+7 1.71+8 1.63+8
    8             1        0.0      0    0.0      0      0    0.0    0.0    0.0      0      1        0.83
    9             2      8.90-6     0    0.0    1.0    1.0    1.0   1.01.49-4      0      1         2.0
   10             3      8.90-6     0    0.0    1.0    1.0    1.0   1.01.49-4      0      1        7.73
   11             4      6.13-5     0    0.0    1.0    1.0    1.0   1.01.49-4      0      1        8.00
   12             5      6.18-5     0    0.0    1.0    1.0    1.0   1.01.10-4      0      1        24.0
   13             6      5.74-5     0    0.0    1.0    1.0    1.0   1.03.36-5      0      1        36.0
   14             7      4.30-5     0    0.0    1.0    1.0    1.0   1.08.55-6      0      1       720.0

                 12345678901234567890123456789012345678901234567890123456789012345678901234567890
```

Nine Mile Point Nuclear Station Unit: 2 Disposition: N/A

Originator/Date	Checker/Date	Calculation No.	Revision
G.J.Patel (NUCORE)/5-21-98	G.R.Stinson / 5-22-98	H21C-069	00

Ref.

APPENDIX A

Card Image Of RADIOISTOPE Run #.R0833001, Job # 6161, Dated 05/20/98

```
***** RADIOISOTOPE -- RADIOISOTOPE -- NUCORE.V1.01.L.V1.1 -- 12/19/93 -- *****

* * * * * * * * CARD IMAGE OF INPUT SUBMITTED TO RADIOISOTOPE * * * * * * * *

CARD COLUMNS          1         2         3         4         5         6         7         8
             12345678901234567890123456789012345678901234567890123456789012345678901234567890
CARD NO.
    1          NMP2 POST-LOCA SECONDARY CONTAINMENT SOURCE TERM CI-HR/M3, 720 HR
    2            1    0        0.0        0.0   24    0    0    1
    3                0.0
    4            1    9.49-1            KR-93M
    5            2    2.5360            KR-95M
    6            3    1.0581            KR-95
    7            4    5.93-1            KR-97
    8            5    3.3360            KR-88
    9            6    2.16-3            KR-89
   10            7    5.5460            XE-131M
   11            8    1.4361            XE-133M
   12            9    7.1062            XE-133
   13           10    2.3560            XE-135M
   14           11    5.4061            XE-135
   15           12    6.44-3            XE-137
   16           13    8.50-2            XE-138
   17           14    1.54-1            SR-89
   18           20    1.77-2            SR-90
   19           21    1.89-4            SR-91
   20           22    1.17-5            SR-92
   21           23    5.30-6            I-129
   22           24    4.3361            I-131
   23           25    1.7860            I-132
   24           26    4.4061            I-133
   25           27    5.03-1            I-134
   26           28    1.2061            I-135
   27           29    1.46-4            I-136
   28      ***NMP2 POST-LOCA SECONDARY CONTAINMENT SOURCE TERM - CI-HR/M3, 2-HR
   29            1    0        0.0        0.0   24    0    0    1
   30                0.0
   31            1    8.70-2            KR-93M
   32            2    1.70-1            KR-95M
   33            3    9.35-3            KR-95
   34            4    2.02-1            KR-97
   35            5    4.08-1            KR-88
   36            6    2.16-3            KR-89
   37            7    4.84-3            XE-131M
   38            8    7.02-2            XE-133M
   39            9    1.4960            XE-133
   40           10    1.50-1            XE-135M

             12345678901234567890123456789012345678901234567890123456789012345678901234567890
```

Nine Mile Point Nuclear Station Unit: 2 Disposition: N/A

Originator/Date	Checker/Date	Calculation No.	Revision
G.J.Patel (NUCORE)/5-21-98	G.R.Stinson / 5-22-98	H21C-069	00

Ref.

APPENDIX A

Card Image Of RADIOISTOPE Run #.R0833001, Job # 6161, Dated 05/20/98

```
***** PROGRAM -- RADIOISOTOPE -- NU007.VER01.LEV02 -- 12/13/83 -- *****

* * * * * * * * CARD IMAGE OF INPUT SUBMITTED TO RADIOISOTOPE * * * * * * *

CARD COLUMNS              1         2         3         4         5         6         7         8
                 12345678901234567890123456789012345678901234567890123456789012345678901234567890
CARD NO.
   41              11    3.23-1            XE-135
   42              12    6.64-3            XE-137
   43              13    8.35-2            XE-138
   44              19    2.40-2            BR-83
   45              20    1.36-2            BR-84
   46              21    1.88-4            BR-85
   47              22    3.37-5            BR-87
   48              23    9.78-9            I-129
   49              25    2.93-1            I-131
   50              26    2.92-1            I-132
   51              27    5.88-1            I-133
   52              28    2.56-1            I-134
   53              29    5.07-1            I-135
   54              30    1.66-4            I-136
   55           **NMP2 POST-LOCA SECONDARY CONTAINMENT SOURCE TERM - CI-HR/MJ, 8-HR
   56               1    0        0.0       0.0   24    0    0    1
   57                   0.0
   58               1    5.70-1            KR-83M
   59               2    1.25+0            KR-85M
   60               3    1.17-1            KR-85
   61               4    5.65-1            KR-87
   62               5    2.29+0            KR-88
   63               6    2.16-3            KR-89
   64               7    6.17-2            XE-131M
   65               8    8.70-1            XE-133M
   66               9    2.14+1            XE-133
   67              10    9.44-1            XE-135M
   68              11    6.25+0            XE-135
   69              12    6.64-3            XE-137
   70              13    8.50-2            XE-138
   71              19    1.18-1            BR-83
   72              20    1.79-2            BR-84
   73              21    1.88-4            BR-85
   74              22    3.37-5            BR-87
   75              23    1.22-7            I-129
   76              25    3.64+0            I-131
   77              26    1.39+0            I-132
   78              27    6.53+0            I-133
   79              28    4.98-1            I-134
   80              29    4.39+0            I-135

                 12345678901234567890123456789012345678901234567890123456789012345678901234567890
```

NIAGARA MOHAWK NUCLEAR ENGINEERING	CALCULATION CONTINUATION SHEET	Page 130 (Next ____)

Nine Mile Point Nuclear Station Unit: 2 Disposition: N/A

Originator/Date	Checker/Date	Calculation No.	Revision
G.J.Patel (NUCORE)/5-21-98	G.R.Stinson / 5-22-98	H21C-069	00

Ref.

APPENDIX A

Card Image Of RADIOISTOPE Run #.R0833001, Job # 6161, Dated 05/20/98

```
***** PROGRAM -- RADIOISOTOPE -- NUDOS.V2401.LEVEL -- 12/13/91 -- *****

* * * * * * * *  CARD IMAGE OF INPUT SUBMITTED TO RADIOISOTOPE  * * * * * * * *

CARD COLUMNS              1         2         3         4         5         6         7         8
          12345678901234567890123456789012345678901234567890123456789012345678901234567890123456789012345678901
CARD NO.
   81          10    1.66-4            I-136
   82       **NMP2 POST-LOCA SECONDARY CONTAINMENT SOURCE TERM - CI-MR/M3, 24 HR
   83           1    0        0.0       0.0   24    0    0    1
   84               0.0
   85           1    8.47-1            KR-83M
   86           2    2.45+0            KR-85M
   87           3    6.51-1            KR-85
   88           4    5.93-1            KR-87
   89           5    3.32+0            KR-88
   90           6    2.16-3            KR-89
   91           7    3.49-1            XE-131M
   92           8    4.57+0            XE-133M
   93           9    1.17+2            XE-133
   94          10    2.15+0            XE-135M
   95          11    3.42+1            XE-135
   96          12    6.64-3            XE-137
   97          13    9.50-2            XE-138
   98          14    1.54-1            SR-89
   99          15    1.79-2            SR-90
  100          16    1.98-4            SR-91
  101          17    3.37-5            SR-92
  102          18    6.70-7            I-129
  103          19    1.93+1            I-131
  104          20    1.79+0            I-132
  105          21    2.67+1            I-133
  106          22    5.03-1            I-134
  107          23    1.09+1            I-135
  108          24    1.66-4            I-136
  109       **NMP2 POST-LOCA SECONDARY CONTAINMENT SOURCE TERM - CI-MR/M3, 96 HR
  110           1    0        0.0       0.0   24    0    0    1
  111               0.0
  112           1    8.49-1            KR-83M
  113           2    2.53+0            KR-85M
  114           3    2.33+0            KR-85
  115           4    5.93-1            KR-87
  116           5    3.33+0            KR-88
  117           6    2.16-3            KR-89
  118           7    1.33+0            XE-131M
  119           8    1.27+1            XE-133M
  120           9    3.81+2            XE-133

          12345678901234567890123456789012345678901234567890123456789012345678901234567890123456789012345678901
```

Nine Mile Point Nuclear Station Unit: 2 Disposition: N/A

Originator/Date	Checker/Date	Calculation No.	Revision
G.J.Patel (NUCORE)/5-21-98	G.R.Stinson / 5-22-98	H21C-069	00

Ref.

APPENDIX A

Card Image Of RADIOISTOPE Run #.R0833001, Job # 6161, Dated 05/20/98

```
***** PROGRAM -- RADIOISOTOPE -- NU007.VER01.LEV02 -- 12/13/83 -- *****

* * * * * * * *  CARD IMAGE OF INPUT SUBMITTED TO RADIOISOTOPE  * * * * * * * *

CARD COLUMNS              1         2         3         4         5         6         7         8
                 12345678901234567890123456789012345678901234567890123456789012345678901234567890
CARD NO.
  121              10    2.35+0          XE-135M
  122              11    5.39+1          XE-135
  123              12    6.64-3          XE-137
  124              13    8.50-2          XE-138
  125              19    1.54-1          BR-83
  126              20    1.79-2          BR-84
  127              21    1.88-4          BR-85
  128              22    3.37-5          BR-87
  129              23    2.22-6          I-129
  130              25    5.72+1          I-131
  131              26    1.79+0          I-132
  132              27    4.38+1          I-133
  133              28    5.03-1          I-134
  134              29    1.28+1          I-135
  135              30    1.66-4          I-136

                 12345678901234567890123456789012345678901234567890123456789012345678901234567890
```

Nine Mile Point Nuclear Station Unit: 2 Disposition: N/A

Originator/Date	Checker/Date	Calculation No.	Revision
G.J.Patel (NUCORE)/5-21-98	G.R.Stinson / 5-22-98	H21C-069	00

Ref.

APPENDIX A

Card Image Of QADMOD Run #.R0833001, Job # 8174, Dated 05/21/98

```
***** PROGRAM ----- QADMOD ----- NU137.VF800.LIVD3 --11/17/81 -- *****

* * * * * * * *  CARD IMAGE OF INPUT SUBMITTED TO QADMOD  * * * * * * * *

CARD COLUMNS              1         2         3         4         5         6         7         8
                 12345678901234567890123456789012345678901234567890123456789012345678901234567890
CARD NO.
    1            ** POST-LOCA EXTERNAL CLOUD SHINE DOSE TO CONTROL ROOM,   720 HR
    2                9    2    0    2   10   10    1   -2    0   15   15   20
    3                                          1    2
    4             2.72+10
    5                 0.0    572.0    965.6   1106.5   1370.8   1580.6   1698.2   1820.3
    6              1950.2   2070.6   2147.8   2295.7   2399.0   2497.0   2591.3   2682.2
    7                 0.0     80.1    160.2    240.3    320.4    400.5    480.5    560.7
    8               640.8    720.9    801.0    881.1    961.2   1041.3   1121.4   1201.5
    9                 0.0    0.314    0.628    0.942     1.26     1.57     1.88     2.20
   10                2.51     2.83     3.14     3.46     3.78     4.00     4.40     4.71
   11                5.03     5.34     5.65     5.97     6.28
   12             1    12      0.0   2529.8      0.0   2529.8
   13             2    12      0.0   2606.0      0.0   2606.0
   14             3     3  1201.50
   15             4     3      0.0
   16             5     3 -2646.69
   17             6     3 -2657.00
   18             7     1 20467.32
   19             8     1 20482.56
   20             9     2  1737.35
   21            10     2  1767.84
   22             1     1  8
   23             2     2  1  2  4                                      0.0       0.0      10.0
   24             3     1  1  4                                         0.0    2550.0     -10.0
   25             4     1  2  4  7                                      0.0      10.0     -10.0
   26             5     1  4  5  7                                   3000.0       0.0     -10.0
   27             6     2  5  6  7  9                               20700.0       0.0   -1000.0
   28             7     2  5  7  8 10                               20700.0    1800.0   -2560.0
   29             8     2  5  7  9 10                               20480.0    1800.0   -2750.0
   30             9     1  5  8 10                                  20700.0    1752.6   -2700.0
   31            10     1  4  5  7  9                               20700.0    1650.0   -2700.0
   32                1.2-3                                          20700.0     500.0   -3200.0
   33                      2.24
   34             23   25
   35             2.47+06  1.49+06  4.57+05  3.14+05  1.31+05  1.24+05  5.33+02      0.0
   36             MEV-MR     CC-SEC          MDFM
   37             20513.0   1798.3 -3164.94    1                                   DET 1
   38             20513.0   1828.5 -3164.94    1                                   DET 2
   39             20513.0   1981.2 -3164.94    1                                   DET 3
   40             20513.0   2133.6 -3164.94    1                                   DET 4

                 12345678901234567890123456789012345678901234567890123456789012345678901234567890
```

Ref.

APPENDIX A

Card Image Of QADMOD Run #.R0833001, Job # 8174, Dated 05/21/98

```
***** PROGRAM ----- QADMOD ----- NU137.VERD0.LEV03 --11/25/91 -- *****

* * * * * * * *  CARD IMAGE OF INPUT SUBMITTED TO QADMOD  * * * * * * * *

CARD COLUMNS              1         2         3         4         5         6         7         8
         12345678901234567890123456789012345678901234567890123456789012345678901234567890123456789 0
CARD NO.
   41          20513.0   2438.4 -3164.94    1                                        DET 5
   42          20558.8   1798.3 -3164.84    1                                        DET 6
   43          20558.8   1828.8 -3164.84    1                                        DET 7
   44          20558.8   1981.2 -3164.84    1                                        DET 8
   45          20558.8   2133.6 -3164.84    1                                        DET 9
   46          20558.8   2438.4 -3164.84    1                                        DT 10
   47          21076.9   1798.3 -3164.84    1                                        DT 11
   48          21076.9   1828.8 -3164.84    1                                        DT 12
   49          21076.9   1981.2 -3164.84    1                                        DT 13
   50          21076.9   2133.6 -3164.84    1                                        DT 14
   51          21076.9   2438.4 -3164.84    1                                        DT 15
   52          20819.7   1798.3 -3164.84    1                                        DT 16
   53                                      -1
   54        ** POST-LOCA EXTERNAL CLOUD SHINE DOSE TO CONTROL ROOM, 2 HR DOSE
   55           8    2    0    2   10   10    1   -2    0   15   15   20
   56                                        1    2
   57        2.72+10
   58            0.0     672.9     965.6    1186.5    1370.8    1540.6    1680.2    1920.3
   59         1350.2    2070.6    2187.8    2295.7    2399.0    2497.0    2591.3    2592.2
   60            0.0      90.1     160.2     240.3     320.4     400.5     480.5     560.7
   61          640.8     720.9     801.0     881.1     961.2    1041.3    1121.4    1201.5
   62            0.0     0.314     0.628     0.942      1.26      1.57      1.88      2.20
   63           2.51      2.83      3.14      3.46      3.78      4.00      4.40      4.71
   64           5.03      5.34      5.65      5.97      6.28
   65        1     12       0.0    2529.8       0.0    2529.8
   66        2     12       0.0    2606.0       0.0    2606.0
   67        3      3   1201.50
   68        4      3       0.0
   69        5      3  -2646.68
   70        6      3  -2667.00
   71        7      1  20467.32
   72        8      1  20482.56
   73        9      2   1737.36
   74       10      2   1767.84
   75        1      1   4                                          0.0       0.0      10.0
   76        2      2   1   2   4                                  0.0    2550.0     -10.0
   77        3      1   1   4                                      0.0      10.0     -10.0
   78        4      1   2   4   7                               3000.0       0.0     -10.0
   79        5      1   4   5   7                              20700.0       0.0   -1000.0
   80        6      2   5   6   7   9                          20700.0    1800.0   -2660.0
         12345678901234567890123456789012345678901234567890123456789012345678901234567890123456789 0
```

Ref.

APPENDIX A

Card Image Of QADMOD Run #.R0833001, Job # 8174, Dated 05/21/98

```
***** PROGRAM ----- QADMOD ----- NU137.VERDD.LIVJJ --11/25/91 -- *****

* * * * * * * * CARD IMAGE OF INPUT SUBMITTED TO QADMOD * * * * * * * *

CARD COLUMNS          1         2         3         4         5         6         7         8
             12345678901234567890123456789012345678901234567890123456789012345678901234567890
CARD NO.
   91         7     2  5  7  8 10                          20480.0    1800.0   -2750.0
   92         8     2  6  7  9 10                          20700.0    1752.6   -2700.0
   93         9     1  5  8 10                             20700.0    1850.0   -2700.0
   94        10     1  4  5  7  9                          20700.0     500.0   -3260.0
   95           1.2-3
   96                   2.24
   97        23   25
   98        1.07+04  5.65+04  2.74+04  2.05+04  1.62+04  2.01+04  4.30+02       0.0
   99        MEV-HR     CC-SEC          MREM
   100       20513.0   1798.3 -3164.94    1                                  DET 1
   101                                   -1
   102      ** POST-LOCA EXTERNAL CLOUD SHINE DOSE TO CONTROL ROOM, 8 HR DOSE
   103          9    2    0    2   10   10    1   -2    0   15   15   20
   104                                   1    2
   105       2.72+10
   106           0.0     672.9     965.6    1186.5    1370.8    1540.6    1688.2    1820.7
   107        1350.2    2070.6    2197.8    2295.7    2399.0    2497.0    2591.3    2682.2
   108           0.0      80.1     160.2     240.3     320.4     400.5     480.5     560.7
   109         640.9     720.9     801.0     881.1     961.2    1041.3    1121.4    1201.5
   110           0.0     0.314     0.629     0.942      1.26      1.57      1.90      2.20
   111          2.51      2.83      3.14      3.45      3.76      4.00      4.40      4.71
   112          5.03      5.34      5.65      5.97      6.28
   113       1    12       0.0    2529.9       0.0    2529.8
   114       2    12       0.0    2606.0       0.0    2606.0
   115       3     3   1201.50
   116       4     3       0.0
   117       5     3  -2646.69
   118       6     3  -2667.00
   119       7     1  20467.32
   120       8     1  20482.56
   121       9     2   1737.36
   122      10     2   1767.84
   123       1     1   4                                      0.0       0.0      10.0
   124       2     2   1  2  4                               0.0    2550.0     -10.0
   125       3     1   1  4                                   0.0      10.0     -10.0
   126       4     1   2  4  7                            3000.0       0.0     -10.0
   127       5     1   4  5  7                           20700.0       0.0   -1000.0
   128       6     2   5  6  7  9                        20700.0    1800.0   -2460.0
   129       7     2   6  7  9 10                        20480.0    1800.0   -2750.0
   130       8     2   4  7  9 10                        20700.0    1752.6   -2700.0

             12345678901234567890123456789012345678901234567890123456789012345678901234567890
```

NIAGARA MOHAWK NUCLEAR ENGINEERING	CALCULATION CONTINUATION SHEET	Page 135 (Next ____)

Nine Mile Point Nuclear Station Unit: 2 Disposition: N/A

Originator/Date	Checker/Date	Calculation No.	Revision
G.J.Patel (NUCORE)/5-21-98	G.R.Stinson / 5-22-98	H21C-069	00

Ref.

APPENDIX A

Card Image Of QADMOD Run #.R0833001, Job # 8174, Dated 05/21/98

```
***** PROGRAM ----- QADMOD ----- NU137.VERD0.LEV03 --11/25/81 -- *****

* * * * * * * *  CARD IMAGE OF INPUT SUBMITTED TO QADMOD  * * * * * * * *

CARD COLUMNS              1         2         3         4         5         6         7         8
         12345678901234567890123456789012345678901234567890123456789012345678901234567890
CARD NO.
  121     9    1  6  8 10                                  20700.0    1850.0   -2700.0
  122    10    1  4  5  7  9                               20700.0     500.0   -3260.0
  123       1.2-3
  124                2.24
  125     23   25
  126    1.39+05  3.14+05  1.84+05  1.35+05  7.80+04  9.12+04  5.33+02       0.0
  127    MEV-HR     CC-SEC          MREM
  128    20513.0   1798.3 -3164.94    1                                   DET 1
  129                                 -1
  130    ** POST-LOCA EXTERNAL CLOUD SHINE DOSE TO CONTROL ROOM, 24 HR DOSE
  131       4    2    0    2   10   10    1   -2    0   15   15   20
  132                                  1    2
  133    2.72+10
  134        0.0     672.9     965.6    1186.5    1370.8    1540.8    1648.2    1820.3
  135     1350.2    2070.6    2187.8    2295.7    2399.0    2497.0    2591.3    2682.2
  136        0.0      60.1     160.2     240.3     320.4     400.5     480.5     560.7
  137      540.9     720.9     801.0     881.1     961.2    1041.3    1121.4    1201.5
  138        0.0     0.314     0.628     0.942      1.26      1.57      1.88      2.20
  139       2.51      2.83      3.14      3.45      3.78      4.00      4.40      4.71
  140       5.03      5.34      5.65      5.97      6.28
  141    1    12       0.0    2529.8       0.0    2529.8
  142    2    12       0.0    2606.0       0.0    2606.0
  143    3     3   1201.50
  144    4     3       0.0
  145    5     3  -2646.69
  146    6     3  -2667.00
  147    7     1  20467.32
  148    8     1  20482.56
  149    9     2   1737.36
  150   10     2   1767.84
  151    1     1  4                                          0.0       0.0      10.0
  152    2     2  1  2  4                                    0.0    2550.0     -10.0
  153    3     1  1  4                                       0.0      10.0     -10.0
  154    4     1  2  4  7                                 3000.0       0.0     -10.0
  155    5     1  4  5  7                                20700.0       0.0   -1000.0
  156    6     2  5  6  7  9                             20700.0    1800.0   -2600.0
  157    7     2  6  7  8 10                             20480.0    1800.0   -2750.0
  158    8     2  6  7  9 10                             20700.0    1752.6   -2700.0
  159    9     1  6  8 10                                20700.0    1850.0   -2700.0
  160   10     1  4  5  7  9                             20700.0     500.0   -3260.0
         12345678901234567890123456789012345678901234567890123456789012345678901234567890
```

NIAGARA MOHAWK
NUCLEAR ENGINEERING

CALCULATION CONTINUATION SHEET

Nine Mile Point Nuclear Station Unit: 2 Disposition: N/A

Originator/Date	Checker/Date	Calculation No.	Revision
G.J.Patel (NUCORE)/5-21-98	G.R.Stinson / 5-22-98	H21C-069	00

Ref.

APPENDIX A

Card Image Of QADMOD Run #.R0833001, Job # 8174, Dated 05/21/98

```
***** BEGIN RUN ----- QADMOD ----- NUTRA.V/MOD.LEV03 --11/25/81 -- *****

* * * * * * * * CARD IMAGE OF INPUT SUBMITTED TO QADMOD * * * * * * * *

CARD COLUMNS              1         2         3         4         5         6         7         8
          12345678901234567890123456789012345678901234567890123456789012345678901234567890123456789012
CARD NO.
  151          1.2-3
  152                    2.24
  153        23   25
  154       7.10+05  9.67+05  4.19+05  3.01+05  1.27+05  1.23+05  5.33+02      0.0
  155       MFV-HR     CC-SEC          MREM
  156       20313.0   1798.3 -3164.84    1                                  DCT 1
  157                                    -1
  158       ** POST-LOCA EXTERNAL CLOUD SHINE DOSE TO CONTROL ROOM, 96 HR DOSE
  159          8    2    0    2   10   10    1   -2    0   15   15   20
  160                                   1    2
  161       2.72+10
  162          0.0     672.9     965.6    1186.5    1370.8    1540.6    1686.2    1920.3
  163       1950.2    2070.6    2187.8    2295.7    2399.0    2497.0    2591.3    2682.2
  164          0.0      80.1     160.2     240.3     320.4     400.5     480.5     560.7
  165        640.8     720.9     801.0     881.1     961.2    1041.3    1121.4    1201.5
  166          0.0     0.314     0.628     0.942      1.26      1.57      1.89      2.20
  167         2.51      2.83      3.14      3.46      3.79      4.00      4.40      4.71
  168         5.03      5.34      5.45      5.97      6.20
  169       1    12       0.0    2599.4       0.0    2324.4
  170       2    12       0.0    2606.0       0.0    2606.0
  171       3     3    1201.50
  172       4     3       0.0
  173       5     1   -2646.69
  174       6     3   -2667.00
  175       7     1   20467.37
  176       8     1   20402.56
  177       9     2    1737.35
  178      10     2    1767.84
  179       1     1    4                                      0.0       0.0      10.0
  180       2     2    1   2   4                              0.0    2550.0     -10.0
  181       3     1    1   4                                  0.0      10.0     -10.0
  182       4     1    2   4   7                           3000.0       0.0     -10.0
  183       5     1    4   5   7                          20700.0       0.0   -1900.0
  184       6     2    5   6   7   9                      20700.0    1800.0   -2560.0
  185       7     2    6   7   9  10                      20450.0    1800.0   -2750.0
  186       8     2    6   7   9  10                      20700.0    1752.6   -2700.0
  187       9     1    6   8  10                          20700.0    1650.0   -2700.0
  188      10     1    4   5   7   9                      20700.0     500.0   -3260.0
  189          1.2-3
  200                    2.24

          12345678901234567890123456789012345678901234567890123456789012345678901234567890123456789012
```

Nine Mile Point Nuclear Station Unit: 2 Disposition: N/A

Originator/Date	Checker/Date	Calculation No.	Revision
G.J.Patel (NUCORE)/5-21-98	G.R.Stinson / 5-22-98	H21C-069	00

Ref.

APPENDIX A

Card Image Of QADMOD Run #.R0833001, Job # 8174, Dated 05/21/98

```
***** PROGRAM ----- QADMOD ----- NUI17.VF900.LTV03 --11/25/91 -- *****

* * * * * * * *  CARD IMAGE OF INPUT SUBMITTED TO QADMOD  * * * * * * * *

CARD COLUMNS              1         2         3         4         5         6         7         8
                 12345678901234567890123456789012345678901234567890123456789012345678901234567890
CARD NO.
  201              21   25
  202             1.61+06  1.35+05  4.57+05  3.34+05  1.31+05  1.24+05  5.33+02      0.0
  203             MEV-MA     CC-SEC          MRCM
  204             20513.0   1798.3 -3164.94    1                                  DET 1
  205                                         -1

                 12345678901234567890123456789012345678901234567890123456789012345678901234567890
```

Ref.

APPENDIX A

Card Image Of RADIOISOTOPE Run #.R0833001, Job # 9825, Dated 05/17/98

```
***** PROGRAM -- RADIOISOTOPE -- NU007.V0001.LEV02 -- 12/13/93 -- *****

* * * * * * * *  CARD IMAGE OF INPUT SUBMITTED TO RADIOISOTOPE   * * * * * * * *

CARD COLUMNS              1         2         3         4         5         6         7         8
          12345678901234567890123456789012345678901234567890123456789012345678901234567890123456789
CARD NO.
     1          NMP1 POST-LOCA CR FILTER ACTIVITY IN UCI-HR DUE TO LOCA @ UNIT 2
     2            1    0        0.0        0.0   11    0    0    1
     3                 0.0
     4           19    2.30+4             03-53
     5           20    3.90+3             08-86
     6           21    1.22+0             90-95
     7           22    9.96-5             08-87
     8           23    8.44+0             I-129
     9           24    7.66+7             I-131
    10           25    2.69+5             I-132
    11           27    9.29+6             I-133
    12           29    9.94+4             I-134
    13           28    1.67+6             I-135
    14           30    1.98-2             I-136

12345678901234567890123456789012345678901234567890123456789012345678901234567890123456789
```

Nine Mile Point Nuclear Station Unit: 2 Disposition: N/A

Originator/Date	Checker/Date	Calculation No.	Revision
G.J.Patel (NUCORE)/5-21-98	G.R.Stinson / 5-22-98	H21C-069	00

Ref.

APPENDIX A

Card Image Of QADMOD Run #.R0833001, Job # 8601, Dated 05/21/98

```
***** PROGRAM ----- QADMOD ----- NU137.VER00.LEV03 --11/25/81 -- *****

* * * * * * * *  CARD IMAGE OF INPUT SUBMITTED TO QADMOD  * * * * * * * *

CARD COLUMNS              1         2         3         4         5         6         7         8
         12345678901234567890123456789012345678901234567890123456789012345678901234567890123456789 0
CARD NO.
    1     ** NMP1 CR FILTER SHINE DOSE TO OPERATOR @ EL 277'-0" DUE TO U2 LOCA
    2        8    2    0    2    4    3    1   +3    1    1    0    0
    3                                  1    1
    4          0.0       0.0       0.0       1.0
    5      1     1  -500.00
    6      2     1    15.24
    7      3     1    35.56
    8      4     1   716.28
    9      1     1  1  2                                   10.0      10.0      10.0
   10      2     2  2  3                                   20.0       0.0       0.0
   11      3     1  3  4                                  100.0       0.0       0.0
   12        1.2-3
   13                 2.24
   14      23   25
   15      8.47+11  4.39+11  6.39+10  4.49+10  7.26+09  4.93+08  9.14+07
   16          MEV PER  SQ CM-SEC   MREM PER          HOUR
   17      533.40     0.00      0.00    1                                DP A1
   18                                   -1

         12345678901234567890123456789012345678901234567890123456789012345678901234567890123456789 0
```

NIAGARA MOHAWK NUCLEAR ENGINEERING	CALCULATION CONTINUATION SHEET	Page 140 (Next ____)

Nine Mile Point Nuclear Station Unit: 2 Disposition: N/A

Originator/Date	Checker/Date	Calculation No.	Revision
G.J.Patel (NUCORE)/5-21-98	G.R.Stinson / 5-22-98	H21C-069	00

Ref.

APPENDIX A

Card Image Of RADIOISOTOPE Run #.R0833001, Job # 4206, Dated 05/19/98

```
***** PROGRAM -- RADIOISOTOPE -- NU007.V[illegible].LEV02 -- 12/13/[illegible] -- *****

* * * * * * * *  CARD IMAGE OF INPUT SUBMITTED TO RADIOISOTOPE   * * * * * * * *

CARD COLUMNS            1         2         3         4         5         6         7         8
                1234567890123456789012345678901234567890123456789012345678901234567890123456789 0
CARD NO.                                                                  C
   1              NMPI POST-LOCA EXTERNAL CLOUD ACTIVITY IN CI-SEC/M3 W/ U2 LOCA
   2                1    0       0.0       0.0   24    0    0    1
   3                   0.0
   4                1    1.08+0            KR-83M
   5                2    1.86+0            KR-85M
   6                3    5.06-1            KR-85
   7                4    1.75+0            KR-87
   8                5    3.83+0            KR-88
   9                6    2.11+0            KR-89
  10                7    2.64-1            XE-131M
  11                8    2.05+0            XE-133M
  12                9    6.10+1            XE-133
  13               10    1.06+1            XE-135M
  14               11    1.18+1            XE-135
  15               12    4.68+0            XE-137
  16               13    4.38+0            XE-138
  17               19    9.20-3            BR-83
  18               20    7.05-3            BR-84
  19               21    9.59-6            BR-85
  20               22    1.36-3            BR-87
  21               23    1.51-8            I-129
  22               25    3.09-1            I-131
  23               26    1.00-1            I-132
  24               27    3.27-1            I-133
  25               28    1.05-1            I-134
  26               29    1.78-1            I-135
  27               30    3.13-3            I-136

1234567890123456789012345678901234567890123456789012345678901234567890123456789012345
```

FORM/

NIAGARA MOHAWK NUCLEAR ENGINEERING	CALCULATION CONTINUATION SHEET	Page 141 (Next ____)

Nine Mile Point Nuclear Station Unit: 2 Disposition: N/A

Originator/Date	Checker/Date	Calculation No.	Revision
G.J.Patel (NUCORE)/5-21-98	G.R.Stinson / 5-22-98	H21C-069	00

Ref.

APPENDIX A

Card Image Of QADMOD Run #.R0833001, Job # 4221, Dated 05/19/98

```
***** PROGRAM ----- QADMOD ----- NUTIT.VCROOD.LEV01 --11/21/81 -- *****

* * * * * * * *  CARD IMAGE OF INPUT SUBMITTED TO QADMOD  * * * * * * * *

CARD COLUMNS              1         2         3         4         5         6         7         8
         12345678901234567890123456789012345678901234567890123456789012345678901234567890123456789012
CARD NO.
    1    ** NNPI CR EXTERNAL CLOUD SHINE DOSE DUE TO U2 LOCA
    2       5    2    0    2    2    3    3   -2    0   27   27   12
    3                                         1
    4    1.609+15
    5         0.0     10.0     20.0     30.0     40.0     50.0     75.0    100.0
    6       150.0    200.0    250.0    300.0    350.0    400.0    450.0    500.0
    7      1000.0   1500.0   2000.0   3000.0   4000.0   5000.0   7500.0  10000.0
    8     15000.0  20000.0  40000.0  80000.0
    9         0.0     10.0     20.0     30.0     40.0     50.0     75.0    100.0
   10       150.0    200.0    250.0    300.0    350.0    400.0    450.0    500.0
   11      1000.0   1500.0   2000.0   3000.0   4000.0   5000.0   7500.0  10000.0
   12     15000.0  20000.0  40000.0  80000.0
   13         0.0    .1571    .3142    .4712    .6283    .7854    .9425   1.0996
   14      1.2566   1.4137   1.2566   1.4137   1.5708
   15     1     3   -20.32
   16     2     3     0.0
   17     1     1  1                                      0.0      0.0    -50.0
   18     2     2  1  2                                   0.0      0.0    -10.0
   19     3     1  2                                      0.0      0.0     10.0
   20       1.2-3
   21                 2.24
   22      23   25
   23     2.04+05  2.99+05  1.57+04  3.22+05  2.62+05  1.78+05  3.41+04      0.0
   24     5.93-10  5.55-10  5.00-10  4.72-10  4.64-10  4.17-10  3.89-10  3.06-10
   25      MEV PER     CM**2          DEM
   26         0.0       0.0  -519.16   1                                 DFT 1
   27                                  -1

         12345678901234567890123456789012345678901234567890123456789012345678901234567890123456789012
```

Unit 1

1. What is the pre-defined acceptance criteria for the total bypass leakage beyond secondary containment which is part of the Appendix J Testing Program?

2. Does the turbine building ventilation system function in the event of a loss of offsite power?

3. The staff has determined that an inadequate basis exists for assuming an adsorber efficiency of 95% for the elemental form of iodine because the crediting of an efficiency of 95% in Regulatory Guide 1.52, Rev 2, Table 2 is based upon a laboratory test of the adsorber which shows a methyl iodine penetration of less than 1% (99% removal). The Unit 1 technical specification only requires a demonstration of 90% removal for the methyl form of iodine. In addition, the laboratory test which is being performed by the licensee overpredicts the capability of the charcoal and does not provide a representative prediction of the manner in which the charcoal would perform in the event of an accident.

4. It is inappropriate to consider mixing in the reactor building because the REVS does not incorporate into its design the capability to recirculate flow back to the reactor building. The Unit 1 design takes the air, passes it through the ESF system and then discharges it to the environment. The RBEVS does not demonstrate the capabilities described in SRP 6.5.3, Rev 2 to qualify for the 50% mixing. (Refer to pg 6.5.3-7)

5. It has been assumed that MSIV leakage is scrubbed in the torus. That is an incorrect assumption. MSIV leakage is not released to the torus. Therefore, the DF of 4.63 assumed was inappropriate.

6. It is inappropriate to assume both REVS trains are operating. Single failures must be considered.

7. On pg 9 of calculation H21C047, ti is stated that the maximum pathway bypass (MSIV) leakage is 18.36 scfh @22 psig. A May 21, 1998 letter from the licensee indicates that the administrative limit for MSIV leakage is 42 scfh @35 psig. The dose assessment should have incorporated the value of 42.

8. Bypass (MSIV) leakage is to be based upon the drywell volume and not the drywell and suppression pool volumes.

9. At 35 psig, the saturated temperature of steam is approximately 280.6°F. Taking 1 scfh, would equate to 0.75 ft^3.

Niagara Mohawk Power Corporation
Nine Mile Point Nuclear Station
Unit 2, P. O. Box 63
Lycoming, New York 13093

Check SRP's 8.3' & 8.32

FAX TRANSMITTAL

TO: JACK HAYES

DEPT.: NRC

TOTAL NUMBER OF PAGES FAXED (including coversheet) 56

COMMENTS: SGTS pg VII-37 UFSAR last filter fan has a capacity of 1600 cfm

FROM: TED KULCZYCKY
Nuclear Engineering, ESB-2

EXT:

FAX: (315) 349-~~1836~~ 1579

NIAGARA MOHAWK NUCLEAR ENGINEERING

CALCULATION CONTINUATION SHEET

Project Nine Mile Point Nuclear Station *Unit* 1 *Disposition* N/A

Originator/Date	*Checker/Date*	*Calculation No.*	*Rev*
A. Moisan 5/20/98	Glenn Stinson 5/21/98	H21C047	01

TABLE OF CONTENTS

		Page No.
Calculation Title Page		1
Table of Contents		2
Objective of Calculation		3
Method		4
Data/Assumptions		5
Table 1	Core Inventory	10
Table 2	X/Q Values	11
Calculation		12
Containment Leakage		12
ESF Leakage		13
Bypass Leakage		15
Table 3	Airborne doses	16
Containment shine		17
Table 4	Containment Activity	19
Filter shine		29
Table 5	Control Room Filter Activity	30
Cloud shine		32
Table 6	Cloud Activity	33
Skyshine		37
Results		38
Table 7	Total CR Doses	38
Conclusions		39
Computer Run Log		39
References		40
APPENDIX A (14 pages) Card image of computer runs		43

NIAGARA MOHAWK NUCLEAR ENGINEERING	CALCULATION CONTINUATION SHEET	Page 3

Project Nine Mile Point Nuclear Station *Unit* 1 *Disposition* N/A

Originator/Date	*Checker/Date*	*Calculation No.*	*Rev*
A. Moisan 5/20/98	Glenn Stinson 5/21/98	H21C047	01

NOTE: This revision is a total rewrite of Revision 0.

OBJECTIVE OF REVISION

Major changes made in this revision to H21C047 are as follows:

Primary Containment

- primary containment leakage rate changed from 1.1% (used in 1984 submittal) to 1.5% to conform with the existing Technical Specification limit.
- primary containment free air volume changed from 3.00E+5 ft^3 to 3.14E+5 ft^3 which is a refined estimation of the actual value
- addition of torus scrubbing of elemental halogens using a very conservative drywell to wetwell airspace bypass leak rate of 2% and the guidance given in SRP 6.5.5.

Secondary Containment

- secondary containment free air volume changed from 2.304E+6 ft^3 to 2.10E+6 ft^3. The revised value is an actual calculated value rather than the value used in Revision 00 which was a back-calculated value based on a Reactor Building Emergency Ventilation (RBEV) flow rate of 1600 cfm being able to exhaust one building volume in one day.
- RBEV filter elemental efficiency changed from 99% to 95% which is consistent with the efficiency allowed (per Reg Guide 1.52) for a 2 inch bed with humidity control.

Control Room

- control room ventilation previously was assumed to be 3580 cfm unfiltered for 0 to 32 seconds, 3163 cfm filtered with 30 cfm unfiltered from 32 seconds to 720 hrs. This is now changed, as a result of modifications to the Control Room ventilation system, to 2500 (plus 30 cfm unfiltered) from 0 to 24 seconds, and 2500 cfm filtered (plus 30 cfm unfiltered) from 24 seconds to 720 hours.
- free air volume changed from 1.36E+5 ft^3 to 1.31E+5 ft^3.

Other gamma sources

For completeness - 4 contributors to the gamma dose are added to the calculation:

- direct shine from the primary containment
- direct shine from the CR filter
- direct shine from the cloud
- air scattered shine from the containment source

Project Nine Mile Point Nuclear Station *Unit* 1 *Disposition* N/A

Originator/Date	*Checker/Date*	*Calculation No.*	*Rev*
A. Moisan 5/20/98	Glenn Stinson 5/21/98	H21C047	01

As the CR emergency filters are now actuated on a LOCA signal, the response of the CR vent radiation monitor is no longer calculated. The amount of time required for an operator to manually actuate the CR emergency filter is also not calculated in Revision 01, as due to the LOCA signal logic, it is no longer relevant. The objective of this calculation now becomes to calculate doses in the Unit 1 CR post LOCA. Given the simple bypass leakage model used, CR thyroid dose, in units of Rem/scfh @ 22 psig are calculated. It should be noted that this calculation will ensure that the Unit 1 Control Room is habitable given the bypass leakage rates currently measured. This calculation should not be used to determine maximum allowable bypass leakage as it is very conservative. If the following were incorporated, the rem per scfh of bypass leakage would dramatically decrease:

- credit for plateout, holdup, and mixing of the bypass leakage in the piping, condenser, and TB air space
- ICRP-30 dose conversion factors

METHOD

This section provides a brief discussion of the general methodology used in calculating CR doses. Additional details are provided in the specific calculation sections.

A Regulatory Guide 1.3 (REF 3) source term, using the guidance given in NUREG 0800 - Standard Review Plan (REF 5), is modeled using Stone & Webster computer code DRAGON (REF 21) to calculate isotopic activities in the reactor building, and doses in the CR due to airborne activity. The initial core noble gas and iodine isotopic activities are given in Table 1.

The following sources of radioactive releases are considered in this analysis:

- Leakage from primary containment pressure boundary to secondary containment, hereafter referred to as "containment leakage".
- Leakage that occurs in secondary containment from the Emergency Safety Feature (ESF) components that recirculate water drawn from the suppression chamber after a LOCA, hereafter referred to as "ESF leakage".
- Leakage from the isolation valves, which become the primary containment pressure boundary during and following a LOCA, to the turbine building, bypassing the secondary containment and hereafter referred to as "bypass leakage".

Project Nine Mile Point Nuclear Station *Unit* 1 *Disposition* N/A

Originator/Date	*Checker/Date*	*Calculation No.*	*Rev*
A. Moisan 5/20/98	Glenn Stinson 5/21/98	H21C047	01

DATA / ASSUMPTIONS

SOURCE TERM PARAMETERS

1. The reactor is assumed to be operating at 102% of full thermal power at the time of the accident. (REF 5, page 15.6.5-5 and REF 18 recommend that 102% power be used in analyses to allow for possible instrument errors in registering the power level).

2. 100% reactor power level is 1850 MW_t (REF 2 d.) and 102% power is 1887 MW_t.

3. The radioactive material released from the reactor core and containment are as follows:

   a. 100% of the core noble gases and 25% of the core radioactive iodines are immediately available for release from the primary containment (REF 3, page 1).

   b. of the 25% of core iodines released per item 3.a above, 91% are elemental, 5% are particulate, and 4% are organic. (REF 3, page 1)

      For filtration and bypass leakage computations "elemental" halogens are assumed to include both the elemental and particulate halogens, and the "methyl" halogens are assumed to include only the organic halogens. This results in 0.96 * 0.25 = 0.24 (or 24%) and 0.04 * 0.25 = 0.01 (or 1%) of the core elemental and methyl, respectively, halogens are released to the primary containment atmosphere at time t = 0

   c. 50% of the core iodine is assumed to be mixed in the sump water being circulated through the containment external piping systems. This is used for ESF leakage calculations (REF 5 Section 15.6.5 Appendix B).

   In clarifying the source term, in section II.B.2 of NUREG 0737 (REF 4), the NRC stated that the source term in liquid-containing systems was 50% of the core halogens in the depressurized cooling water which does not contain noble gas. Also, only halogens are assumed to be present in ESF systems which is also consistent with NUREG 0737.

4. The core inventory in curie/MW_t (from REF 19) is multiplied by the core power level of 1850 MW_t and then by 1.02 to account for the instrument uncertainty to give core activity at the time of the accident. These data are given in Table 1.

Project Nine Mile Point Nuclear Station *Unit* 1 *Disposition* N/A

Originator/Date	*Checker/Date*	*Calculation No.*	*Rev*
A. Moisan 5/20/98	Glenn Stinson 5/21/98	H21C047	01

PRIMARY CONTAINMENT PARAMETERS

5. The primary containment free air volume is 314,000 ft³ of which 180,000 ft³ is the drywell volume and 134,000 ft³ is the torus air space (REF 8). The initial suppression chamber water volume is 79,800 ft³ (REF 1, Table XV-32a). Although the water and free air volume of the suppression chamber change during the accident, they are assumed, in this analysis, to remain constant for duration of the accident.

6. The primary to secondary containment leak rate is 1.5% per day per Technical Specification (REF 2a) Bases 3.3.3 and 4.3.3. Using 1.5% is consistent with the maximum allowable Technical Specification leak rate and therefore consistent with Regulatory Guide 1.3 (REF 3). Note that the computer model used in this calculation is independent of pressure as leakage is modeled as strictly a volume fraction.

7. Containment leakage and bypass elemental and particulate iodine leakage is reduced by a factor of 4.63 to account for scrubbing in the Torus. This value is based on a maximum suppression pool bypass fraction of 2% calculated in REF 34 which reduces the Torus decontamination factor of 5 assumed for Mark I containment per SRP (REF 5) section 6.5.5 as follows.

Bypass (MSIV) leakage is not scrubbed by the torus liquid

$$D = \frac{DF}{1+B(DF-1)} = \frac{5}{1+0.02(5-1)} = 4.63$$

No for MSIV leakage

where:

DF – pool decontamination factor = 5 for Mark I containments per SRP 6.5.5
B = fraction of drywell atmosphere which bypasses the suppression pool
D – the dose reduction factor

SECONDARY CONTAINMENT PARAMETERS

8. The dual containment design at NMP 1, with a secondary containment which completely surrounds the primary containment and held at a negative pressure of 0.25 inch water gauge below adjacent regions, meets the criteria for the fission product structures for collection and control of the post-accident releases. Also, the return header provides a wide distribution over secondary containment (REF 1, Figure VI-24). Therefore, the leakage from the primary containment is assumed to mix with 50% of the secondary containment volume (REF 5 Section 6.5.3).

9. The free volume of secondary containment is assumed to be 2.10E+6 ft³ per REF 9.

10. The response of the reactor building ventilation to a high radiation signal is as follows (REF 33):

t=0 signal to isolate received
t=2 seconds time delay to avoid spurious actuation - SDBD-601 Rev 0 section 3.5.2
t= 7.5 seconds time for slowest RB isolation valve (BV-202-31) to close (note last test 2 seconds)

Project Nine Mile Point Nuclear Station *Unit* 1 *Disposition* N/A

Originator/Date	*Checker/Date*	*Calculation No.*	*Rev*
A. Moisan 5/20/98	Glenn Stinson 5/21/98	H21C047	01

The radiation monitor is assumed to initiate a signal within ~2.5 seconds of sensing high radiation making total time 10 seconds The reactor building is maintained at a negative pressure of 0.25" water gauge with respect to the atmosphere and is anticipated to be maintained by normal RB ventilation during the 10 second RBEVS change over to filtration.

11. The RBEV flow rates are assumed to be:

- 70,000 cfm (REF 13, Table 3.4-5) unfiltered for the first 10 seconds of the accident while the RBEV is starting
- 3200 cfm + 10% filtered from 10 seconds to 30 minutes (REF 1.a and REF 20, page 14)
- 1600 cfm + 10% filtered from 30 minutes to 720 hrs (REF 1.a)

12. The Unit 1 Tech Specs. (REF 2b, Section 3.4.4.d) specify operations of RBEVS within ±10% of the design flow rate. Applying the 50% mixing in the secondary containment discussed above, the required release rates (volumes/day) for the DRAGON (REF 21) input are calculated as follows:

70000 cfm *1440 min/day * 2*(1volume/2.10E6ft^3) = 96.0 volumes/day	0 - 10 sec
3200 cfm *1440 min/day *1.1* 2*(1volume/2.10E6ft^3) = 4.83 volumes/day	10 sec - 30 min
1600 cfm *1440 min/day *1.1* 2*(1volume/2.10E6ft^3) =2.41 volumes/day	30 min - 720 hrs

13. The release point for RBEV system is the Main Stack (REF 1.a, Section VII.H.1.0, page VII-36).

14. The iodine removal efficiency of the RBEV filters is assumed to be 99% for particulate and 95% for elemental iodine and 90% for organic iodines. The 99% particulate efficiency assumed agrees with the original Licensing basis as described in the UFSAR (REF 1, Sections XV.C.5.1.8 and VII-H.2.0) which describes the filter efficiency as 99% for methyl iodide and other iodine forms and the Technical Specifications (REF 2b, Section 3.4.4.b) which gives the halogenated hydrocarbon test requirement of ≥ 99%. The RBEV duct heaters control the humidity to less than 70% per Section VII.H.2.0 of the UFSAR (REF 1). Based on humidity control and penetration, Regulatory Guide 1.52, Table 2 (REF 17) assigns a filter efficiency of 95% for elemental iodines for 2 inch charcoal beds. The methyl iodine filter efficiency of 90% assumed is conservative as Reg Guide 1.52 Table 2 also assigns a methyl filter efficiency of 95% for 2" deep filters that have humidity control of 70%. For input to DRAGON, this makes the effective filter efficiency for elemental and particulate:

Elemental efficiency = (0.95)(91/96) +(0.99)(5/96) = 0.952

Project Nine Mile Point Nuclear Station Unit 1 Disposition N/A

Originator/Date	Checker/Date	Calculation No.	Rev
A. Moisan 5/20/98	Glenn Stinson 5/21/98	H21C047	01

CONTROL ROOM PARAMETERS

15. The free volume of the NMP 1 control room is 1.31E+5 ft^3 (REF 14).

16. The control room normal and emergency intake rate is 2250 cfm ± 10%. 2250 cfm + 10% = 2475 cfm, use 2500 cfm. At 24 seconds, the emergency ventilation begins filtration (REFs 7 & 33).

17. The doors of the control room are weather-stripped and the penetrations sealed to maintain a positive pressure of approximately one-sixteenth of an inch of water (REF 1.b, page III-11), however, an unfiltered inleakage of 10 cfm to the control room is assumed per Reference 5, Section III.3.d.(2).(ii). An additional 20 cfm is assumed to account for an unfiltered inleakage (REF 26) through an unsealed drain. With the total unfiltered inleakage of 30 cfm, this makes the total normal air intake rate 2530 cfm and the total emergency air intake rate of 2530 cfm.

18. The CR emergency filters actuate within 24 seconds of receiving a LOCA signal (REF 33)

19. The Iodine removal efficiencies of the CR emergency filters are assumed to be 99% for the particulate, and 90% for elemental and methyl iodines. The organic halogen filter efficiency is consistent with previous analysis and the elemental efficiency assumed is more conservative than the 99% given in the Technical Specifications (REF 2c). Weighted filter efficiencies are determined below to account for the 30 cfm unfiltered inleakage to the control room:

$$\text{Elemental efficiency} = \frac{(2500\text{ cfm})(0.90)(91/96) + (2500\text{ cfm})(0.99)(5/96) + (30\text{ cfm})(0)}{2500\text{ cfm} + 30\text{ cfm}} = 0.894$$

$$\text{Methyl efficiency} = \frac{(2500)(0.90) + (30\text{ cfm})(0)}{2500\text{ cfm} + 30\text{ cfm}} = 0.889$$

BYPASS LEAKAGE PARAMETERS

20. Bypass leakage is assumed to be released without holdup and without plateout via the stack unfiltered (REF 6). This is conservative as all of the elemental and particulate iodine would likely plateout and at least partial mixing would be expected in the Turbine Building (TB).

NOTE: Since bypass leakage is already included in the 1.5% per day containment leak rate, in a rigorous, mechanistic approach, the bypass leakage should be subtracted from the 1.5% per day containment leak rate assumed so that the sum of containment leakage and bypass leakage equals 1.5% containment volumes per day leak rate. Conservatively, this is not done in this calculation.

NIAGARA MOHAWK NUCLEAR ENGINEERING

CALCULATION CONTINUATION SHEET

Page 9

Project Nine Mile Point Nuclear Station Unit 1 Disposition N/A

Originator/Date	Checker/Date	Calculation No.	Rev
A. Moisan 5/20/98	Glenn Stinson 5/21/98	H21C047	01

ESF LEAKAGE PARAMETERS

No

21. The ESF leakage is assumed to be 750 gph (REF 16) and is assumed to start at t=0 post-LOCA. Also, ESF leakage is assumed to undergo 50% mixing in the secondary containment. The basis for this assumption is the same as the assumption made for containment leakage.

22. 50% of the core iodines are assumed to be released to the torus water which has a volume of 79,800 ft^3. 10% of the pool halogens that leak to the secondary containment are assumed to become airborne instantaneously. This is consistent with REF 5, Section 15.6.5, Appendix B, Part III for water temperatures below 212°F. The suppression chamber water temperature remains well below 212°F (REF 1.e) for entire duration of the accident.

OTHER PARAMETERS

23. Assumed breathing rate (REF 3):

0-720 hrs 3.47E-04 m^3/sec

24. Main stack χ/Q values used are taken from Reference 19, pages 12 & 13 and given in Table 2. Note: no occupancy adjustment factors for 8-24, 24-96, 96-720 hrs as well as no change in the breathing rates were used for the airborne doses in the CR. This is not overly conservative as the large difference between the 0-2 hr χ/Q and the 2-720 hr χ/Q results in virtually all the dose being delivered in the first 24 hours.

25. Current min pathway bypass leakage (converted to 22 psig) = 5.28 scfh (REF 27)
Current max pathway bypass leakage (converted to 22 psig) = 18.36 scfh

26. Occupancy adjustment factors are utilized for external gamma source doses - direct shine, filter shine, cloud shine, and skyshine. (REF 4 and Table 6.4-1 of SKP Section 6.4- REF 5):

0-24 hr	1.00
24-96 hr	0.60
96-720 hr	0.40

Only if [illegible] already incorporated into [illegible]

27. Direct shine from containment shine, filter shine, cloud shine, and skyshine dose calculation method and model taken from REF 10.

Project Nine Mile Point Nuclear Station *Unit* 1 *Disposition* N/A

Originator/Date	*Checker/Date*	*Calculation No.*	*Rev*
A. Moisan 5/20/98	Glenn Stinson 5/21/98	H21C047	01

Table 1

CORE INVENTORY AT 102% THERMAL POWER		
ISOTOPE	ACTIVITY (Ci/MW_t)	CORE INVENTORY (Ci)
I-131	2.90E+04	5.47E+07
I-132	4.20E+04	7.93E+07
I-133	4.80E+04	9.06E+07
I-134	6.20E+04	1.17E+08
I-135	4.90E+04	9.25E+07
KR-83M	3.00E+03	5.66E+06
KR-85M	6.50E+03	1.23E+07
KR-85	3.00E+02	5.66E+05
KR-87	1.20E+04	2.26E+07
KR-88	1.70E+04	3.21E+07
KR-89	2.00E+04	3.77E+07
XE-131M	1.80E+02	3.40E+05
XE-133M	2.00E+02	3.77E+05
XE-133	5.60E+04	1.06E+08
XE-135M	1.70E+04	3.21E+07
XE-135	9.80E+03	1.85E+07
XE-138	4.40E+04	8.30E+07

TABLE 1: Ci/MW_t from Reference 19, pages 6 & 7, is multiplied by 1850 MW_t * 1.02 to determine core inventory.

Project Nine Mile Point Nuclear Station *Unit* 1 *Disposition* N/A

Originator/Date	*Checker/Date*	*Calculation No.*	*Rev*
A. Moisan 5/20/98	Glenn Sunson 5/21/98	H21C047	01

Table 2

X/Q VALUES @ MAIN STACK RELEASE FOR CONTROL ROOM AIR INTAKE (SEC/M^3)	
TIME	X/Q
0-2 HR	3.12E-04
2-720 HR	1.22E-08

TABLE 2: All X/Q values taken from REF 19, pages 12 & 13.

Project Nine Mile Point Nuclear Station Unit 1 Disposition N/A

Originator/Date	Checker/Date	Calculation No.	Rev
A. Moisan 5/20/98	Glenn Stinson 5/21/98	H21C047	01

CALCULATION

The DRAGON input description below applies to all runs made except where noted. The inputs for the airborne dose models are described in three sections;

- Containment Leakage
- ESF Leakage
- Bypass Leakage

CONTAINMENT LEAKAGE

The specified fractions of the reactor core isotopic inventory (Table 1) are released in the primary containment atmosphere volume and leaked into the secondary containment (SC) due to the post-LOCA pressurization of the primary containment. The core inventory which leaked in the SC mixes uniformly with 50% of the SC volume and is finally released to the environment through the RBEV.

DRAGON computer code (REF 21) design inputs are as follows:

Core isotopic inventory from Table 1

Atmospheric dispersion factors from Main Stack to Unit 1 CR Air Intake from Table 2

Fractions of core activities released to primary containment at time t = 0 sec: 100% core noble gas, 24% core elemental/particulate halogens, and 1% methyl halogens. To account for scrubbing in the torus, the elemental fraction released to the primary containment air space is reduced to 0.24/4.63 = 0.052.

Primary containment:
volume - 3.14E+5 ft^3
leak rate - 0.015 per day

Secondary Containment:
volume - 2.10E+6 cubic ft
leak rate (all assume 50% mixing)
70000 cfm = 96.0 vol/day for 24 seconds
3200+10% cfm = 4.83 vol/day from 24 seconds to 30 minutes
1600 cfm+10% = 2.41 volumes/day from 30 minutes to 30 days

RBEV Exhaust filter efficiencies:
0 to 10 seconds, No filtration through charcoal filter
10 seconds until end of accident, elemental & particulate - 0.952, methyl - 0.90

Project Nine Mile Point Nuclear Station *Unit* 1 *Disposition* N/A

Originator/Date	*Checker/Date*	*Calculation No.*	*Rev*
A. Moisar 5/20/98	Glenn Stinson 5/21/98	H21C047	01

Control Room:

volume - 1.31E+5 cubic ft
intake rate- 0 to 24 seconds 2530 cfm unfiltered
24 seconds to 720 hrs 2530 filtered elemental eff = 0.894 methyl= 0.889

Breathing rates:

0-720 hrs 3.47E-04 m^3/sec

Note that because of the DRAGON code limitation that secondary containment filtration cannot be varied as a function of time, two runs are made for Containment Leakage:

- 0 to 10 seconds with no secondary containment filtration
- 10 seconds to 30 days with secondary containment filtration

Both runs are made in DRAGON job #9725 5/17/98.

ESF LEAKAGE

ESF leakage occurs in secondary containment from the engineering safety feature (ESF) system components that circulate water from the torus after a LOCA. 50% of the core halogens are assumed to be in the torus water available for release. Of the halogens in the water, 10% are assumed to become airborne during the leak.

The ESF leakage rate of 750 gallons per hour is converted into a volume/day as follows for input to the DRAGON code:

$$\frac{750gal/hr \times 0.1336\,ft^3/gal \times 24hr/day}{79800\,ft^3/vol} = 3.01E-2\,vol/day$$

The ESF leakage activity available for release is based on the assumptions that 50% of the halogens enter the suppression chamber, and 10% of the halogens in the ESF leakage become airborne immediately, so the halogen release fractions for input to DRAGON become:

96% elemental halogens * 50% * 10% = 0.048
4% methyl halogens * 50% * 10% = 0.002

Project Nine Mile Point Nuclear Station *Unit* 1 *Disposition* N/A

Originator/Date	*Checker/Date*	*Calculation No.*	*Rev*
A. Moisan 5/20/98	Glenn Stinson 5/21/98	H21C047	01

The remainder of the inputs to DRAGON are given below:

Core activities available for release: Table 1
Atmospheric dispersion factors - Main Stack: Table 2
Fractions of core activities released to torus water at time t = 0:
0.048 elemental halogens and 0.002 methyl halogens calculated above. Note that noble gases resulting from the decay of the halogens are released to the secondary containment and to the environment.

Torus water volume:

volume - 7.98E+4 cubic ft
leak rate -3.01E-2 vol/day: calculated above

Secondary Containment:
volume - 2.10E+6 cubic ft
leak rate (all assume 50% mixing)
70000 cfm = 96.0 vol/day for 24 seconds
3200+10% cfm = 4.83 vol/day from 24 seconds to 20 minutes
1600 cfm+10% = 2.41 volumes/day from 20 minutes to 30 days

RBEV Exhaust filter efficiencies:
0 to 10 seconds, No filtration through charcoal filter
10 seconds until end of accident, elemental & particulate - 0.952, methyl - 0.90

Control Room:

volume - 1.31E+5 cubic ft
intake rate - 0 to 24 seconds 2530 cfm unfiltered
24 seconds to 720 hrs 2530 filtered elemental eff = 0.894 methyl= 0.889

Breathing rates DATA/ASSUMPTIONS #22

0-720 hrs 3.47E-04 m^3/sec

Note that because of the DRAGON code limitation that secondary containment filtration cannot be varied as a function of time, two runs are made for ESF Leakage:

- 0 to 10 seconds with no secondary containment filtration
- 10 seconds to 30 days with secondary containment filtration

Both runs are made in DRAGON job #9725 5/17/98.

NIAGARA MOHAWK NUCLEAR ENGINEERING | CALCULATION CONTINUATION SHEET | Page 15

Project Nine Mile Point Nuclear Station *Unit* 1 *Disposition* N/A

Originator/Date	*Checker/Date*	*Calculation No.*	*Rev*
A. Moisan 5/20/98	Glenn Stinson 5/21/98	H21C047	01

BYPASS LEAKAGE

Bypass leakage is the activity release pathway where process systems pass from primary containment to areas outside of secondary containment, "bypassing" the secondary containment ventilation envelope. As a result, the activity is not filtered by RBEV. The release is assumed to be an elevated release through main stack. 1 scfh is arbitrarily used and then scaled, as dose varies linearly with leakage. Thus 1 scfh must be converted first to cfh and then volumes per day for input to DRAGON This s is done below by application of the ideal gas law.

FLOWs = FLOW rate at standard conditions 14.7 psia and 68° F = 1 scfh
FLOWa = FLOW rate at actual conditions of 22 psig and 262.06° F (262.06° F equals saturated steam temp at 36.7 psia)
Ts = standard temperature = 68°F = 293.2°K
Ta = actual temperature = 262.066°F= 401°K
Ps = standard pressure 14.7 psia
Pa = actual pressure 36.7 psia

@ 80.5°F + 460 = 740
@ 35 psi

Units should OK if psia are used

$$FLOW_a = \frac{T_a}{T_s} x \frac{P_s}{P_a} x FLOW_s = \frac{\cancel{401°K}}{293.2°K} x \frac{14.7psia}{36.7psia} x 1\ 0scfh = 0.548cfh$$

0.747

Factor (1.4) 0.807

error should $\frac{740\ °K}{492\ °R}\left(\frac{14.7}{14.7}\right)\frac{14.7+35}{Psia} = 0.442$

1.4
2.44

Converting this flow rate to volumes per day is calculated as follows:

$$0.548\frac{ft^3}{hr} x 24\frac{hr}{day} x \frac{1volume}{3.14E+5\ ft^3} = 4.19E-5\frac{volumes}{day}$$

Factor (1.74)

should be designed Vol

$\frac{314,000}{180,000}$

TORUS DF 463

The other inputs to DRAGON are as follows

Core activities available for release: Table 1
Atmospheric dispersion factors - Main Stack: Table 2
Fractions of core activities released to primary containment at time=0: 100% noble gas, 24% elemental halogens, and 1% methyl halogens
To account for reduction of elemental and particulate halogen, the fraction of elemental iodine being released to the primary containment air space is reduced to 0.24 /4.63 = 0.052

Primary containment:
volume - 3.14E+5 cubic ft
leak rate - 4.19-5 vol/day calculated above

NIAGARA MOHAWK NUCLEAR ENGINEERING

CALCULATION CONTINUATION SHEET

Project Nine Mile Point Nuclear Station Unit 1 Disposition N/A

Originator/Date	Checker/Date	Calculation No.	Rev
A. Moisan 5/20/98	Glenn Stinson 5/21/98	H21C047	01

Control Room:

volume - 1.31E+5 cubic ft
intake rate - 0 to 24 seconds 2530 cfm unfiltered
24 seconds to 720 hrs 2530 filtered elemental eff = 0.894 methyl= 0.889

Breathing rates:

0-720 hrs 3.47E-04 m^3/sec

DRAGON run # 9725 dated 5/17/98 was run for all 5 cases:

- containment leakage 0 10 seconds
- containment leakage 10 seconds to 720 hours
- ESF leakage 0-10 seconds
- ESF leakage 10 seconds to 720 hrs
- Bypass leakage 0-720 hrs

Note the results of the 0 -10 second Containment Leakage and ESF leakage cases are somewhat conservative as the model assumes what leaked into the secondary containment in the first 10 seconds continues to leak to the environment without filtration by RBEV, even though the release from the secondary containment would actually be filtered after 10 seconds. This has minimal impact as very little activity is released in the first 10 seconds. Also this conservatism does not significantly impact the results of this calculation.

The results are given in Table 3.

TABLE 3 - CR DOSES CR FILTER ON AT 24 SECONDS

	DOSE(REM)			DRAGON
RELEASE PATH	THYROID	GAMMA	BETA	RUN
CONT LK 0-10 SEC	4.48E-02	9.80E-05	1.24E-03	9725
CONT LK 10 SEC-720 HR	6.53E-01	2.35E-02	3.27E-01	9725
ESF LEAKAGE 0 - 10 SEC	7.22E-02	1.59E-05	1.23E-04	9725
ESF LEAKAGE 0 SEC - 720 HR	9.27E-01	5.57E-04	5.65E-03	9725
SUBTOTAL	1.70E+00	2.42E-02	3.34E-01	
BYPASS AT 1 SCFH				
NO PLATEOUT NO TB HOLDUP	3.29E-01	8.24E-04	1.07E-02	9725

Project Nine Mile Point Nuclear Station *Unit* 1 *Disposition* N/A

Originator/Date	*Checker/Date*	*Calculation No.*	*Rev*
A. Moisan 5/20/98	Glenn Stinson 5/21/98	H21C047	01

As can be seen from Table 3, the limiting dose, as expected, is the thyroid dose. As stated previously, the relationship between bypass leakage rate and dose is linear. Therefore, the amount of bypass which can accepted using this model is easily calculated as follows

Containment leakage + ESF Leakage = 1.70 Rem

Thyroid dose available for Bypass Leakage = 30 - (1.70) = 28.30 Rem

$$\frac{28.30\,Rem}{0.329\,Rem/scfh} = 86.0\,scfh$$

The objective of this calculation is not to determine maximum acceptable bypass leakage. It is to determine that the Unit 1 Control Room is habitable given the current bypass leakage. The calculation should be used carefully when assessing previous habitability as this calculation takes credit for automatic isolation of the Control Room. This design feature was installed in May of 1998. The existing maximum bypass leakage of 18.36 scfh would result in:

$$18.36\,scfh * 0.329\,Rem/scfh = 6.04\,Rem$$

[illegible] $\left(\frac{42.}{18.36}\right) = 2.28$ 13.8

This makes the total LOCA thyroid dose in the Unit 1 Control Room using the current maximum pathway bypass leakage 6.04+1.70 = 7.74 Rem

OTHER GAMMA SOURCES

For purposes of calculating gamma doses from external sources a bypass leakage of 50 scfh is used . This value is arbitrary and again is not intended to determine a maximum bypass leakage value but rather demonstrate margin in the analyses.

CONTAINMENT SHINE

The containment shine contribution to Control Room doses is calculated by first calculating the integrated 720 hour source term in the Secondary Containment. This is done by calculating curie-hours/m³ using the DRAGON (REF 24) computer code runs made previously for containment leakage and ESF leakage. The activity is then converted to units of (MeV-hr)/(cc-sec) using the RADIOISOTOPE (REF 28) code. That source term is then input to QADMOD (REF 24) to calculate the total dose in the Control Room. Using the units of (MeV-hr)/(cc-sec) as input to QADMOD results in the output of QADMOD being in mRem rather than the normal mRem/hr. Note: the QADMOD model used is taken from calculation 1H008-02 (REF 10). The QADMOD results are then adjusted for occupancy to get a maximum total direct shine dose. Note that the activity calculated is based on the 50% mixing model runs used for activity released calculations. If a 100% mixing model had been used, the activity in the Reactor Building would have been greater as less activity would have been released. The impact on direct shine dose rates is discussed further in the QADMOD Results section.

NIAGARA MOHAWK NUCLEAR ENGINEERING

CALCULATION CONTINUATION SHEET

Project Nine Mile Point Nuclear Station *Unit* 1 *Disposition* N/A

Originator/Date	*Checker/Date*	*Calculation No.*	*Rev*
A. Moisan 5/20/98	Glenn Stinson 5/21/98	H21C047	01

The activity concentrations from DRAGON run # 9725, 5/17/98 in units of curie-hours/m³ are summed in Table 4 on the following pages. The integrated concentrations from Table 4 are then input to the RADIOISOTOPE computer code (with no decay time) for conversion into Mev-hr/cc-sec. A card image of RADIOISOTOPE run #9107 5/16/97 is given in APPENDIX A and the results are given below.

Note: results are total specific activity integrated over 720 hrs

Energy (MeV)	Secondary Containment Integrated Activity (MeV-hr)/(cm³-sec)
0.4	5.08E+06
0.8	1.46E+06
1.3	2.79E+05
1.7	2.22E+05
2.2	1.26E+05
2.5	1.45E+05
3.5	1.01E+02

NIAGARA MOHAWK NUCLEAR ENGINEERING

CALCULATION CONTINUATION SHEET

Project Nine Mile Point Nuclear Station *Unit* 1 *Disposition* N/A

Originator/Date	*Checker/Date*	*Calculation No.*	*Rev*
A. Moisan 5/20/98	Glenn Stinson 5/21/98	H21C047	01

TABLE 4 SECONDARY CONTAINMENT INTEGRATED ACTIVITY

Ci-hr/m^3

ISOTOPE	Time Interval 0-10 sec	10s-24 sec	24s-20min	20m-30min	30m-2 hr	2hr-8hr	8hr-24hr	24hr-720hr	TOTAL
CL 0-10 SEC	1.37E-07	3.83E-07	3.11E-05	1.51E-05	1.24E-04	3.40E-04	3.18E-04	7.43E-05	9.03E-04
CL 10 SEC - 720 HR	0.00E+00	2.70E-07	1.90E-03	2.36E-03	6.13E-02	8.02E-01	4.13E+00	7.22E+01	7.72E+01
ESF 0-10 SEC	2.22E-07	6.20E-07	5.03E-05	2.45E-05	2.00E-04	5.50E-04	5.14E-04	1.20E-04	1.46E-03
ESF 10 SEC - 720 HR	0.00E+00	4.36E-07	3.07E-03	3.81E-03	9.92E-02	1.29E+00	6.64E+00	1.03E+02	1.11E+02
I-131									1.88E+02
CL 0-10 SEC	1.99E-07	5.55E-07	4.29E-05	1.94E-05	1.25E-04	1.38E-04	1.36E-05	2.20E-08	3.40E-04
CL 10 SEC - 720 HR	0.00E+00	3.90E-07	2.68E-03	3.01E-03	5.91E-02	2.58E-01	1.00E-01	1.14E-03	4.24E-01
ESF 0-10 SEC	3.22E-07	8.98E-07	6.94E-05	3.13E-05	2.03E-04	2.23E-04	2.20E-05	3.56E-08	5.50E-04
ESF 10 SEC - 720 HR	0.00E+00	6.31E-07	4.17E-03	4.88E-03	9.57E-02	4.17E-01	1.61E-01	1.82E-03	6.85E-01
I-132									1.11E+00
CL 0-10 SEC	2.27E-07	6.34E-07	5.12E-05	2.47E-05	1.97E-04	4.90E-04	3.51E-04	4.68E-05	1.16E-03
CL 10 SEC - 720 HR	0.00E+00	4.46E-07	3.12E-03	3.86E-03	9.74E-02	1.13E+00	4.22E+00	7.53E+00	1.30E+01
ESF 0-10 SEC	3.68E-07	1.03E-06	8.29E-05	4.00E-05	3.19E-04	7.93E-04	5.69E-04	7.58E-05	1.88E-03
ESF 10 SEC - 720 HR	0.00E+00	7.22E-07	5.06E-03	6.24E-03	1.58E-01	1.82E+00	6.79E+00	1.19E+01	2.07E+01
I-133									3.37E+01
CL 0-10 SEC	2.93E-07	8.16E-07	6.64E-05	2.33E-05	1.08E-04	3.75E-05	1.78E-07	1.12E-13	2.26E-04
CL 10 SEC - 720 HR	0.00E+00	5.74E-07	3.42E-03	3.62E-03	4.61E-02	5.26E-02	1.02E-03	4.85E-09	1.07E-01
ESF 0-10 SEC	4.74E-07	1.32E-06	9.45E-05	3.77E-05	1.72E-04	6.07E-05	2.88E-07	1.82E-13	3.67E-04
ESF 10 SEC - 720 HR	0.00E+00	9.29E-07	6.63E-03	5.85E-03	7.46E-02	6.50E-02	1.64E-03	7.76E-09	1.73E-01
I-134									2.60E-01
CL 0-10 SEC	2.32E-07	6.48E-07	5.17E-05	2.45E-05	1.85E-04	3.53E-04	1.44E-04	5.67E-06	7.75E-04
CL 10 SEC - 720 HR	0.00E+00	4.56E-07	3.14E-03	3.82E-03	9.01E-02	7.91E-01	1.46E+00	4.35E-01	2.78E+00
ESF 0-10 SEC	3.75E-07	1.05E-06	8.36E-05	3.97E-05	2.69E-04	5.87E-04	2.33E-04	9.09E-06	1.25E-03
ESF 10 SEC - 720 HR	0.00E+00	7.37E-07	5.06E-03	6.16E-03	1.46E-01	1.28E+00	2.35E+00	5.94E-01	4.48E+00
I-135									7.27E+00
CL 0-10 SEC	2.29E-07	6.38E-07	4.87E-05	2.16E-05	1.32E-04	1.19E-04	7.11E-06	3.37E-09	3.28E-04
CL 10 SEC - 720 HR	0.00E+00	4.49E-07	2.92E-03	3.36E-03	6.15E-02	2.10E-01	4.88E-02	1.65E-04	3.27E-01
ESF 0-10 SEC	0.00E+00	0.00E+00	0.00E+00	0.00E+00	0.00E+00	0.00E+00	0.00E+00	0.00E+00	0.00E+00
ESF 10 SEC - 720 HR	0.00E+00	0.00E+00	0.00E+00	0.00E+00	0.00E+00	0.00E+00	0.00E+00	0.00E+00	0.00E+00
KR-83M									3.27E-01
CL 0-10 SEC	4.98E-07	1.39E-06	1.10E-04	5.15E-05	3.73E-04	6.27E-04	1.70E-04	2.91E-06	1.34E-03
CL 10 SEC - 720 HR	0.00E+00	9.77E-07	6.66E-03	8.02E-03	1.80E-01	1.31E+00	1.55E+00	1.89E-01	3.24E+00
ESF 0-10 SEC	0.00E+00	0.00E+00	0.00E+00	0.00E+00	0.00E+00	0.00E+00	0.00E+00	0.00E+00	0.00E+00
ESF 10 SEC - 720 HR	0.00E+00	0.00E+00	0.00E+00	0.00E+00	0.00E+00	0.00E+00	0.00E+00	0.00E+00	0.00E+00
KR-85M									3.25E+00
CL 0-10 SEC	2.29E-08	6.39E-08	5.19E-06	2.53E-06	2.07E-05	5.77E-05	5.58E-05	1.40E-05	1.66E-04
CL 10 SEC - 720 HR	0.00E+00	4.50E-08	3.17E-04	3.94E-04	1.03E-02	1.36E-01	7.31E-01	3.30E+01	3.39E+01
ESF 0-10 SEC	0.00E+00	0.00E+00	0.00E+00	0.00E+00	0.00E+00	0.00E+00	0.00E+00	0.00E+00	0.00E+00
ESF 10 SEC - 720 HR	0.00E+00	0.00E+00	0.00E+00	0.00E+00	0.00E+00	0.00E+00	0.00E+00	0.00E+00	0.00E+00
KR-85									3.39E+01
CL 0-10 SEC	9.13E-07	2.55E-06	1.89E-04	8.05E-05	4.35E-04	2.62E-04	5.61E-06	1.88E-10	9.76E-04
CL 10 SEC - 720 HR	0.00E+00	1.79E-06	1.12E-02	1.25E-02	1.97E-01	4.17E-01	3.48E-02	8.58E-06	6.73E-01
ESF 0-10 SEC	0.00E+00	0.00E+00	0.00E+00	0.00E+00	0.00E+00	0.00E+00	0.00E+00	0.00E+00	0.00E+00
ESF 10 SEC - 720 HR	0.00E+00	0.00E+00	0.00E+00	0.00E+00	0.00E+00	0.00E+00	0.00E+00	0.00E+00	0.00E+00
KR-87									6.73E-01
CL 0-10 SEC	1.30E-06	3.62E-06	2.63E-04	1.29E-04	8.75E-04	1.13E-03	1.63E-04	5.61E-07	2.59E-03
CL 10 SEC - 720 HR	0.00E+00	2.55E-06	1.70E-02	2.02E-02	4.17E-01	2.21E+00	1.29E+00	3.64E-02	3.99E+00
ESF 0-10 SEC	0.00E+00	0.00E+00	0.00E+00	0.00E+00	0.00E+00	0.00E+00	0.00E+00	0.00E+00	0.00E+00
ESF 10 SEC - 720 HR	0.00E+00	0.00E+00	0.00E+00	0.00E+00	0.00E+00	0.00E+00	0.00E+00	0.00E+00	0.00E+00
KR-88									3.99E+00
CL 0-10 SEC	1.49E-06	4.00E-06	7.44E-05	8.74E-07	1.07E-07	2.68E-16	0.00E+00	0.00E+00	8.09E-05
CL 10 SEC - 720 HR	0.00E+00	2.79E-06	2.04E-03	1.27E-04	2.35E-05	2.33E-13	0.00E+00	0.00E+00	2.19E-03
ESF 0-10 SEC	0.00E+00	0.00E+00	0.00E+00	0.00E+00	0.00E+00	0.00E+00	0.00E+00	0.00E+00	0.00E+00
ESF 10 SEC - 720 HR	0.00E+00	0.00E+00	0.00E+00	0.00E+00	0.00E+00	0.00E+00	0.00E+00	0.00E+00	0.00E+00
KR-89									2.27E-03

NIAGARA MOHAWK NUCLEAR ENGINEERING

CALCULATION CONTINUATION SHEET

Project Nine Mile Point Nuclear Station *Unit* 1 *Disposition* N/A

Originator/Date	*Checker/Date*	*Calculation No.*	*Rev*
A. Moisan 5/20/98	Glenn Stinson 5/21/98	H21C047	01

TABLE 4 SECONDARY CONTAINMENT INTEGRATED ACTIVITY

Ci-hr/m^3

Time Interval

ISOTOPE	0-10 sec	10s-24 sec	24s-20min	20m-30min	30m-2 hr	2hr-8hr	8hr-24hr	24hr-720hr	TOTAL
CL 0-10 SEC	1.36E-08	3.84E-08	3.12E-06	1.52E-06	1.24E-05	3.43E-05	3.25E-05	7.81E-06	9.17E-05
CL 10 SEC - 720 HR	0.00E+00	2.70E-08	1.91E-04	2.37E-04	6.18E-03	8.20E-02	4.42E-01	1.88E+01	1.93E+01
ESF 0-10 SEC	1.10E-14	7.82E-14	2.26E-10	2.72E-10	6.57E-09	6.91E-08	1.92E-07	1.10E-07	3.78E-07
ESF 10 SEC - 720 HR	0.00E+00	6.26E-14	1.82E-08	4.30E-08	3.69E-06	1.90E-04	2.95E-03	6.94E-01	6.97E-01
XE-131M									2.00E+01
CL 0-10 SEC	1.53E-08	4.20E-08	3.45E-06	1.08E-06	1.37E-05	3.70E-05	3.31E-05	6.81E-06	9.58E-05
CL 10 SEC - 720 HR	0.00E+00	3.00E-08	2.13E-04	2.66E-04	7.10E-03	1.08E-01	7.33E-01	8.67E+00	9.52E+00
ESF 0-10 SEC	2.60E-13	1.85E-12	5.32E-09	6.39E-09	1.52E-07	1.47E-06	3.38E-06	1.31E-06	6.32E-06
ESF 10 SEC - 720 HR	0.00E+00	1.48E-12	4.30E-07	1.01E-06	8.49E-05	3.99E-03	4.93E-02	6.60E-01	7.13E-01
XE-133M									1.02E+01
CL 0-10 SEC	4.29E-06	1.20E-05	9.71E-04	4.72E-04	3.86E-03	1.05E-02	9.71E-03	2.19E-03	2.77E-02
CL 10 SEC - 720 HR	0.00E+00	8.43E-06	5.94E-02	7.37E-02	1.92E+00	2.51E+01	1.30E+02	1.78E+03	1.94E+03
ESF 0-10 SEC	3.84E-12	2.56E-11	7.46E-08	8.96E-08	2.13E-06	2.11E-05	5.04E-05	2.15E-05	9.53E-05
ESF 10 SEC - 720 HR	0.00E+00	2.08E-11	6.03E-06	1.42E-05	1.20E-03	5.72E-02	7.45E-01	2.12E+01	2.25E+01
XE-133									1.98E+03
CL 0-10 SEC	1.29E-06	3.59E-06	1.96E-04	4.83E-05	1.03E-04	5.92E-05	2.31E-05	6.93E-07	4.36E-04
CL 10 SEC - 720 HR	0.00E+00	2.53E-06	1.18E-02	1.01E-02	9.36E-02	3.21E-01	4.14E-01	1.11E-01	9.62E-01
ESF 0-10 SEC	2.91E-10	2.06E-09	4.48E-06	4.20E-06	4.44E-05	9.40E-06	3.73E-05	1.46E-06	1.96E-04
ESF 10 SEC - 720 HR	0.00E+00	1.65E-09	3.48E-04	6.59E-04	2.22E-02	2.05E-01	3.76E-01	1.11E-01	7.15E-01
XE-135M									1.88E+00
CL 0-10 SEC	7.49E-07	2.09E-06	1.71E-04	8.34E-05	6.62E-04	1.53E-03	8.60E-04	6.33E-05	3.37E-03
CL 10 SEC - 720 HR	0.00E+00	1.47E-06	1.08E-02	1.39E-02	4.01E-01	6.35E+00	3.02E+01	3.15E+01	6.85E+01
ESF 0-10 SEC	4.49E-11	3.20E-10	9.45E-07	1.15E-06	2.70E-05	2.10E-04	2.66E-04	3.17E-05	5.37E-04
ESF 10 SEC - 720 HR	0.00E+00	2.56E-10	7.66E-05	1.82E-04	1.51E-02	5.46E-01	3.28E+00	3.22E+00	7.06E+00
XE-135									7.55E+01
CL 0-10 SEC	3.34E-06	9.25E-06	4.83E-04	1.10E-04	1.64E-04	1.75E-06	2.17E-14	0.00E+00	7.71E-04
CL 10 SEC - 720 HR	0.00E+00	6.49E-06	2.49E-02	1.69E-02	5.22E-02	1.74E-03	1.07E-10	0.00E+00	9.57E-02
ESF 0-10 SEC	0.00E+00	0.00E+00	0.00E+00	0.00E+00	0.00E+00	0.00E+00	0.00E+00	0.00E+00	0.00E+00
ESF 10 SEC - 720 HR	0.00E+00	0.00E+00	0.00E+00	0.00E+00	0.00E+00	0.00E+00	0.00E+00	0.00E+00	0.00E+00
XE-138									9.65E-02

Project Nine Mile Point Nuclear Station Unit 1 Disposition N/A

Originator/Date	Checker/Date	Calculation No.	Rev
A. Moisan 5/20/98	Glenn Stinson 5/21/98	H21C047	01

QADMOD INPUT

1. The major secondary containment shine dose contributor to Unit 1 Control Room is the atmosphere located above elevation 340'. The reactor building walls located above the 340' elevation area assumed to provide no shielding. Thus, the thickness of these surfaces is neglected in the QADMOD geometry model.

2. The secondary containment atmosphere source term located below 340' is modeled as a right circular cylinder with concrete walls equal to the nominal thickness of the Secondary Containment walls and equal in cross-sectional area to the cross sectional area of the reactor building. Only the area from elevation 261' to 340' is modeled as the part of the Reactor Building located below grade is expected to contribute very little to the direct shine dose rates in the Unit 1 Control Room

3. The Unit 1 Reactor Building has a rectangular cross section. For case of input to QADMOD this is converted to a circular cross section. This is done as follows:

   Rectangular dimensions - column Q to column K - 115'
   column 4 to column 12 - 160'

   Rectangular cross section area = 115 * 160 = 18,400 ft^2

   Radius which results in an equivalent cross sectional circular area is then:

$$radius = \sqrt{\frac{18{,}400\ ft^2}{\pi}} = 76.53ft$$

   The radius calculated above is taken to be the outside radius of the Reactor Building. The concrete wall is assumed to be inboard of this radius making the inner RB wall radius: 76.53' - 1.5' = 75.03'. However, the volume of a right circular cylinder of radius 75.03 ft and height 79'(340'-261') is 1.397E+6 ft^3 which when added to the 9.844E+5 ft^3 which is assumed to be above the 340' elevation would make the total volume being modeled in QADMOD equal 2.381E+6 ft^3 which exceeds the total free air volume used for the DRAGON model (2.10E+6 ft^3). In order not to be overly conservative, the source located below 340' is modeled as an annular cylinder equal to 50% of the free air volume in the secondary containment (recall 50% mixing is assumed) minus the source volume already modeled above 340', i.e. 9.844E+5 ft^3. This makes the volume below 340' to be modeled:

Project Nine Mile Point Nuclear Station Unit 1 Disposition N/A

Originator/Date	Checker/Date	Calculation No.	Rev
A. Moisan 5/20/98	Glenn Stinson 5/21/98	H21C047	01

Note a secondary containment volume of 2.304E+6 ft^3 was incorrectly used for the below refuel floor model. Using this volume is conservative as it is larger than the correct value and as will be seen the below refuel floor source does not contribute to the dose in the control room even with the large volume used

$$(0.50x2.304E+06\,ft^3)-(9.844E+05\,ft^3)=1.676E+05\,ft^3$$

and the equivalent inner radius of the annular source region to be modeled:

$$\pi(75.03^2-R_i^2)*79ft=1.676E+05\,ft^3$$

$$R_i=\sqrt{75.03^2-\frac{1.676E+5\,ft^3}{79*\pi}}=70.39ft$$

Project Nine Mile Point Nuclear Station *Unit* 1 *Disposition* N/A

Originator/Date	*Checker/Date*	*Calculation No.*	*Rev*
A. Moisan 5/20/98	Glenn Stinson 5/21/98	H21C047	01

Dimensions:

1. Distance between columns

Q-P	26'	4-5	20'
P-N	22'	5-6	20'
N-M	22'	6-7	20'
M-L	22'	7-8	20'
L-K	23'	8-9	20'
K-J	3'3"	9-10	20'
J-H	20'	10-11	20'
H-G	20'	11-12	20'
G-F	20'	12-15	60'
F-E	20'	15-18	60'
E-D	22'		
D-C	22'		
C-B	116'3"		
B-AB	22'		
AB-AA	22'		
AA-A	22'		

2 Elevations

Grade	261'0"	REF 1 Fig III-10
Reactor Building roof	393'6"	REF 1 Fig III-10
Control Room roof	300'	REF 1 page III-10

3 Shield thickness'

Control building roof	8.5" concrete	REF 1 page III-10
North and west control room walls	12" concrete	REF 1 page III-10
South wall control room	8" block	REF 1 page III-10

Note: The east and south walls both face away from the Reactor Building and therefore are not modeled in this calculation.

The shield walls running east-west between the Reactor Building and the Control Room are 2' thick poured concrete.

NIAGARA MOHAWK NUCLEAR ENGINEERING

CALCULATION CONTINUATION SHEET

Project Nine Mile Point Nuclear Station *Unit* 1 *Disposition* N/A

Originator/Date	*Checker/Date*	*Calculation No.*	*Rev*
A. Moisan 5/20/98	Glenn Stinson 5/21/98	H21C047	01

The shield wall running north-south between the Reactor Building and the Control Room ranges from 2' to 3' thick concrete block filled with mortar to provide equivalent density to solid block. This wall is conservatively modeled as being a constant 2' of concrete. This shield wall also includes two door openings with labyrinth shielding. Rather than modeling the doors and labyrinths, the shield wall geometry is simplified by modeling the wall without the door openings. The labyrinth shield walls provide sufficient shielding to allow this simplification.
The Reactor Building walls are 1.5' of concrete per NMPC drawing C-15138-C Rev 19 (REF 29).

Boundary and Region Definition:

Origin is assumed to be reactor center line at elevation 261'

Boundary #	Type	Dimension
1	cyl	radius of reactor building center x=0, y=0, r=76.53'= 2332.65 cm
2	plane	ground elevation z=0 cm
3	plane	top RB concrete wall @ el 340' z=2407.92 cm
4	plane	top RB building @ 393'6" z=4038.60 cm
5	plane	1' from bound 6, w wall CR, y=4297.68 cm
6	plane	columns 8-15 = 140', w wall CR, y=4267.20 cm
7	plane	columns M-B-7'=281.5', n wall CR, x=8580.12 cm
8	plane	1' from bound 7, n wall CR, x=8549.64 cm
9	plane	columns M-A = 354.5', s wall CR, x=10805.16
10	plane	bound 6+cols 15-18 = 140'+60' = 200', e wall CR, y=6096.00 cm
11	plane	CR roof @ el 300', z=1188.72 cm
12	plane	top of CR roof 300'8.5", z=1210.31 cm
13	plane	col M to E minus 1', x=3878.58 cm
14	plane	col M to E plus 1', x=3939.54 cm
15	plane	col M to C, x=5250.18 cm
16	plane	col M to C plus 2', x=5311.14 cm
17	plane	col M to AA, x=10134.60 cm
18	plane	col 8 to 4 80', y=-2438.4 cm
19	plane	col 8 to 10 40', y=1219.20
20	plane	col 8 to 14 minus 1' =119', y=3627.12 cm
21	plane	col 8 to 14 plus 1', y=3688.08
22	plane	@ el 333', z=2194.56'
23	cyl	inner radius of secondary containment x=0, y=0, r=75.03'=2286.93 cm. NOTE: this boundary region added in Revision 2

NIAGARA MOHAWK NUCLEAR ENGINEERING

CALCULATION CONTINUATION SHEET

Project Nine Mile Point Nuclear Station *Unit* 1 *Disposition* N/A

Originator/Date	*Checker/Date*	*Calculation No.*	*Rev*
A. Moisan 5/20/98	Glenn Stinson 5/21/98	H21C047	01

Region #	Material	Description
1	air	source region above el 340'
2	air	source region below 340'
3	air	air above RB roof
4	air	air region between RB and first E-W shield wall
5	air	inside control room
6	concrete	CR west wall
7	concrete	CR north wall
8	concrete	CR roof
9	concrete	east-west shield wall south of RB
10	concrete	east-west shield wall, between other e-w shield wall and CR above el 300'
11	concrete	north-south shield wall, west of CR, south of RB
12	air	air region above CR roof
13	air	air region north of CR
14	air	air region west of CR, east of n-s shield wall
15	air	air region west of first e w shield wall
16	air	air region between e-w shield walls
17	air	air region south of second e-w shield wall
18	air	air region south of column AA
19	air	air region above el 333', west of CR
20	air	air region above el 333', north of CR
21	air	air region underneath region 10

NIAGARA MOHAWK NUCLEAR ENGINEERING

CALCULATION CONTINUATION SHEET

Project Nine Mile Point Nuclear Station *Unit* 1 *Disposition* N/A

Originator/Date	*Checker/Date*	*Calculation No.*	*Rev*
A. Molson 5/20/98	Glenn Stimson 5/21/98	H21C047	01

Sketches:

QADMOD Geometry Model

Elevation View

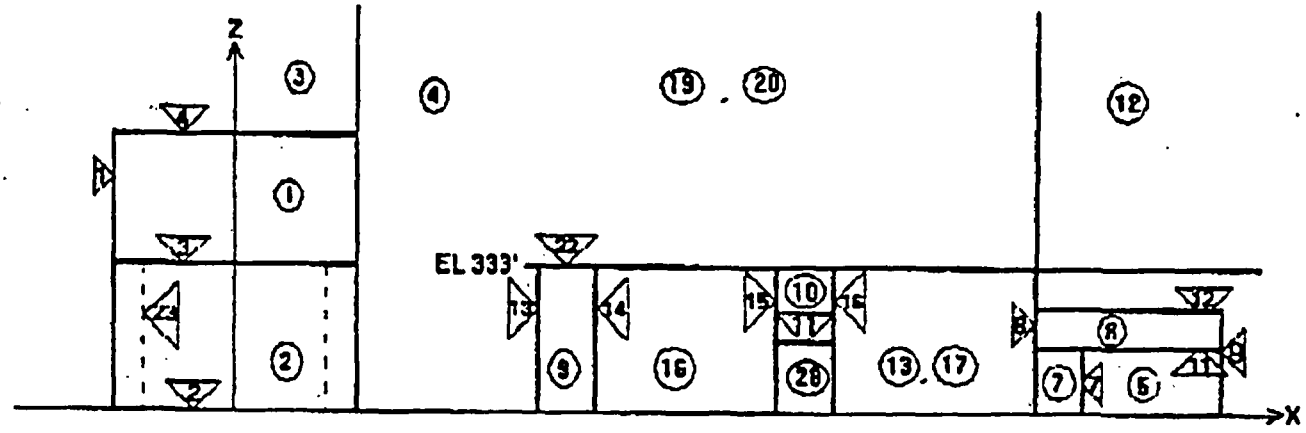

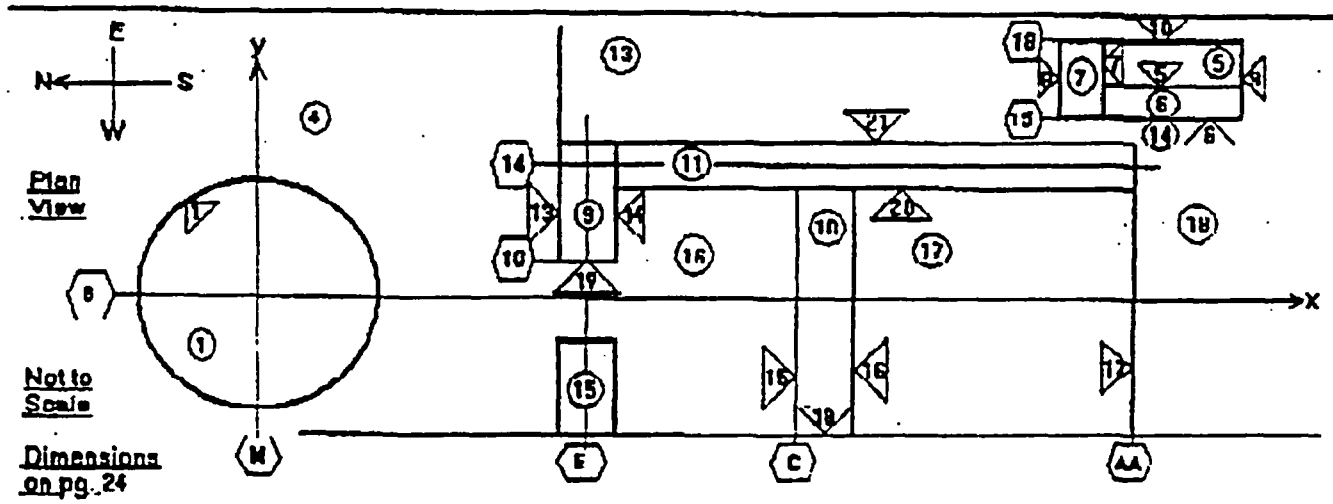

Plan View

Not to Scale

Dimensions on pg. 24

NIAGARA MOHAWK NUCLEAR ENGINEERING

CALCULATION CONTINUATION SHEET

Project Nine Mile Point Nuclear Station *Unit* 1 *Disposition* N/A

Originator/Date	*Checker/Date*	*Calculation No.*	*Rev*
A. Moisan 5/20/98	Glenn Stinson 5/21/98	H21C047	01

QADMOD Geometry Model

Dose Point Locations in Interior of Control Room

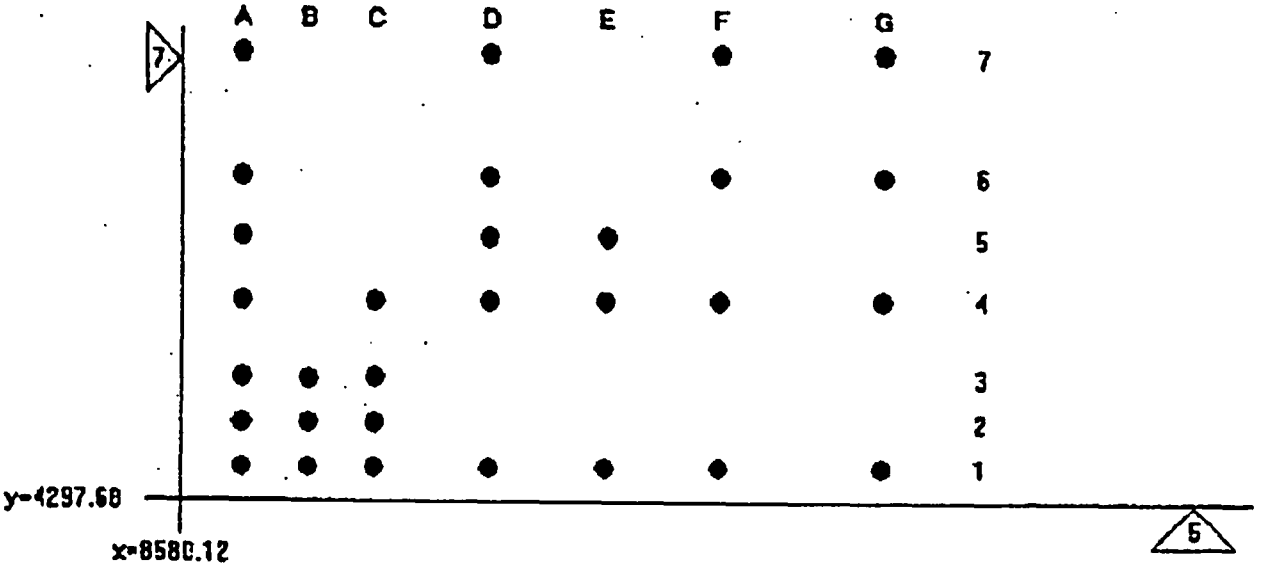

Ax=8581.00	1y=4298.	
Bx=8596.24	2y=4313.24	5' from A/1
Cx=8611.48	3y=4328.48	1' from A/1
Dx=8733.40	4y=4450.40	5' from A/1
Ex=8885.80	5y=4602.80	10' from A/1
Fx=9190.60	6y=4907.60	20' from A/1
Gx=9800.20	7y=5517.20	40' from A/1

z-coodinate for all control room dose points is 6' above control room floor elevation:

277' + 6' - 203'
- 261'
22' = 30.48 cm/ft
= 670.56 cm
= z-coordinate

Project Nine Mile Point Nuclear Station Unit 1 Disposition N/A

Originator/Date	Checker/Date	Calculation No.	Rev
A. Moisan 5/20/98	Glenn Stinson 5/21/98	H21C047	01

QADMOD RESULTS

The specific activity in seven energy groups from RADIOISOTOPE, and the geometry model shown on the previous pages is input to the QADMOD computer code (REF 24) to calculate the 30 day integrated gamma dose from direct shine of the secondary containment. Two runs are made, one for the source above 340' and the other for the source below 340'.

The card images of input to QADMOD is shown in APPENDIX A, and the dose results are presented in Table 5.

Jobs #9111 and #9112 dated 5/16/98 calculate the 30 day gamma dose to the control room.

The QADMOD output identifies its final results as dose rates in units of mRem per hour. Because the activity input to QADMOD was based on 30 day integrated concentrations in the secondary containment the activity in units of Mev-hr/cc-sec rather than the normal Mev/cc-sec, the QADMOD results are actually 30-day integrated doses in units of mRem rather than mRem/hr.

The highest dose occurs at receptor DP A7 with the above 340' dose of 335.4 mRem and the below 340' dose of 0.0036 mRem at the same point making a total of 335.40 mRem.

The occupancy factor adjustment is applied as follows:

Total expected control room occupancy:
(occupancy factors per REF 4 and 32)

100% occupancy for first 24 hours = 24 hours
60% occupancy from 24 - 96 hours = 43.2 hours
40% occupancy from 96-720 hours = 249.6 hours

Total occupancy time = 24 + 43.2 + 249.6 = 316.8 hours
Total time in 30 days = 720 hours

Occupancy adjustment factor = 316.8 / 720 = 0.44

Direct shine dose adjusted for occupancy:

$$335.40 mRem * 0.44 * \frac{1 Rem}{1000 mRem} = 0.148 Rem$$

Project Nine Mile Point Nuclear Station *Unit* 1 *Disposition* N/A

Originator/Date	*Checker/Date*	*Calculation No.*	*Rev*
A. Moisan 5/20/98	Glenn Stinson 5/21/98	H21C047	01

Note: As previously discussed, the source term that resulted in the dose given above is based on a 50% mixing model. If a 100% mixing model had been used, a higher dose would have resulted. The dose above is not adjusted upwards for the following reasons Despite, taking credit only for the exterior Reactor Building walls, the dose from the cloud below 340' is insignificant even if the source volume and strength were increased appreciably. Also, no credit was taken for the shielding provided by the Reactor Building walls above 340' and finally, realistically it is expected that the leakage, both ESF and containment would be at the lower elevations of the building and more likely exhausted rather than reach the upper elevations of the Reactor Building which is the only significant source for containment shine.

FILTER SHINE

As halogens build up on the Control Room filter, the filter becomes a gamma radiation source and a dose rate concern. At NMP-1, the Control Room intake filter is located directly above the Control Room. The distance between the filter and the floor at elevation 300' is assumed to be only 6 inches with the receptor standing in the Control Room at elevation 277' making the total distance from 17 feet six inches. The shielding is the 8 ½ inch concrete floor. This is conservative as there is an approximate 1½ inch grout base for the filter assembly which is not modeled. From 17.5 feet away the filter is a point source and is modeled in QADMOD as such. The method of solution is similar to that used for the secondary containment direct shine model in that the total number of halogen Ci-hrs accumulated on the Control Room filters are converted into a source term, input into a shielding code, and the resultant mRem then adjusted for Control Room occupancy to calculate the total Rem in the Control Room from this source.

Table 5, presented on the following pages, tabulates the total Ci-hr accumulated on the Control Room intake filter. The DRAGON runs used are listed in the table. The Ci-hr from Table 5 are then input to RADIOSIOSTOPE run #5908 dated 5/20/98 to generate activities in units of Mev-hr per sec. These are listed below:

Energy (MeV)	Integrated Activity (MeV-hr)/(sec)
0.4	6.47E+11
0.8	4.49E+11
1.3	1.26E+11
1.7	8.40E+10
2.2	1.46E+10
2.5	1.32E+09
3.5	0.00E+00

NIAGARA MOHAWK NUCLEAR ENGINEERING

CALCULATION CONTINUATION SHEET

Project Nine Mile Point Nuclear Station *Unit* 1 *Disposition* N/A

Originator/Date	*Checker/Date*	*Calculation No.*	*Rev*
A. Moisan 5/20/98	Glenn Stinson 5/21/98	H21C047	01

TABLE 5 ACTIVITY ON CONTROL ROOM FILTER

Ci-Hrs

Time Interval

ISOTOPE	24s - 20 m	20m-30m	30m-2hr	2hr-8hr	8hr-24hr	24hr-720hr	TOTAL	TOTAL
CL 0-10 SEC	2.04E-05	2.57E-05	4.64E-04	2.54E-03	6.51E-03	1.01E-01	1.11E-01	
CL 10 SEC - 720 HR	4.72E-05	1.12E-04	5.59E-03	4.63E-02	1.19E-01	1.92E+00	2.09E+00	
ESF 0-10 SEC	3.31E-05	4.16E-05	7.51E-04	4.11E-03	1.05E-02	1.64E-01	1.79E-01	
ESF 10 SEC - 720 HR	6.78E-05	1.62E-04	8.04E-03	6.66E-02	1.71E-01	2.75E+00	3.00E+00	
BYPASS LEAK @ 1 SCFH	1.05E-04	1.35E-04	3.66E-03	2.31E-02	5.94E-02	9.25E-01	1.01E+00	
I-131						BP@50scfh	5.06E+01	5.59E+01
CL 0-10 SEC	2.77E-05	3.29E-05	4.53E-04	9.49E-04	1.65E-04	1.50E-06	1.65E-03	
CL 10 SEC - 720 HR	6.35E-05	1.44E-04	5.25E-03	1.73E-02	3.37E-03	2.74E-05	2.62E-02	
ESF 0-10 SEC	4.49E-05	5.32E-05	7.34E-04	1.54E-03	2.99E-04	2.43E-06	2.67E-03	
ESF 10 SEC - 720 HR	9.13E-05	2.07E-04	7.55E-03	2.49E-02	4.84E-03	3.95E-05	3.76E-02	
BYPASS LEAK @ 1 SCFH	1.42E-04	1.72E-04	3.52E-03	8.65E-03	1.68E-03	1.37E-05	1.42E-02	
I-132						BP@50scfh	7.09E-01	7.77E-01
CL 0-10 SEC	3.36E-05	4.21E-05	7.38E-04	3.63E-03	6.78E-03	9.62E-03	2.08E-02	
CL 10 SEC - 720 HR	7.76E-05	1.84E-04	8.86E-03	6.62E-02	1.24E-01	1.77E-01	3.76E-01	
ESF 0-10 SEC	5.44E-05	6.81E-05	1.19E-03	5.88E-03	1.10E-02	1.56E-02	3.38E-02	
ESF 10 SEC - 720 HR	1.12E-04	2.65E-04	1.27E-02	9.52E-02	1.78E-01	2.54E-01	5.40E-01	
BYPASS LEAK @ 1 SCFH	1.72E-04	2.20E-04	5.81E-03	3.31E-02	6.18E-02	8.78E-02	1.89E-01	
I-133						BP@50scfh	9.45E+00	1.04E+01
CL 0-10 SEC	3.67E-05	3.85E-05	3.62E-04	2.37E-04	2.06E-06	6.47E-12	6.77E-04	
CL 10 SEC - 720 HR	8.29E-05	1.72E-04	3.91E-03	4.32E-03	3.76E-05	1.18E-10	8.52E-03	
ESF 0-10 SEC	5.94E-05	6.39E-05	5.87E-04	3.83E-04	3.34E-06	1.05E-11	1.10E-03	
ESF 10 SEC - 720 HR	1.19E-04	2.47E-04	5.62E-03	6.21E-03	5.41E-05	1.70E-10	1.23E-02	
BYPASS LEAK @ 1 SCFH	1.88E-04	2.07E-04	2.73E-03	2.16E-03	1.88E-05	5.90E-11	5.30E-03	
I-134						BP@50scfh	2.65E-01	2.88E-01
CL 0-10 SEC	3.37E-05	4.17E-05	6.85E-04	2.63E-03	2.45E-03	5.63E-04	6.40E-03	
CL 10 SEC - 720 HR	7.77E-05	1.82E-04	8.14E-03	4.80E-02	4.46E-02	1.03E-02	1.11E-01	
ESF 0-10 SEC	5.47E-05	6.75E-05	1.11E-03	4.28E-03	3.96E-03	9.12E-04	1.04E-02	
ESF 10 SEC - 720 HR	1.12E-04	2.62E-04	1.17E-02	6.90E-02	6.42E-02	1.48E-02	1.60E-01	
BYPASS LEAK @ 1 SCFH	1.73E-04	2.18E-04	5.37E-03	2.40E-02	2.23E-02	5.13E-03	5.72E-02	
I-135						BP@50scfh	2.86E+00	3.15E+00

Project Nine Mile Point Nuclear Station *Unit* 1 *Disposition* N/A

Originator/Date	*Checker/Date*	*Calculation No.*	*Rev*
A. Moisan 5/20/98	Glenn Stinson 5/21/98	H21C047	01

The very simple QADMOD model is shown below:

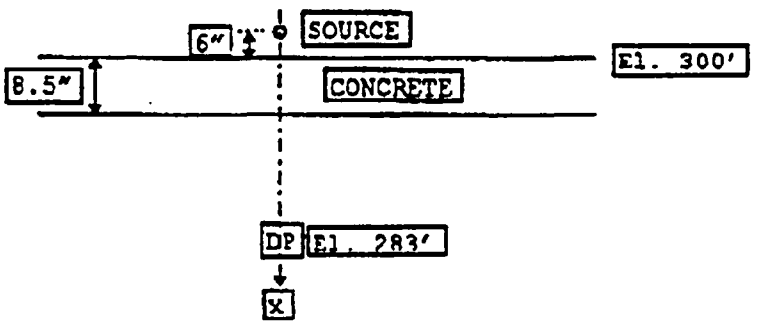

The results of QADMOD run # 5910 dated 5/20/98 are 0.120 Rem. As in the case of the containment shine, this dose has to be adjusted for occupancy by multiplying by the occupancy correction factor of 0.44 (derived on the previous page) to get a total dose of 0.120* 0.44 = 0.053 Rem.

Note that the CREVs filter efficiency could actually be more than the 90% elemental and 90% organic filter efficiencies assumed which would make the activity on the filter higher up to 11% (10/90) higher. Therefore, the total dose from this source is increased by 11% to make a total dose of 0.059 Rem assuming 100% filter efficiency. This dose is included in Table 7.

Project Nine Mile Point Nuclear Station *Unit* 1 *Disposition* N/A

Originator/Date	*Checker/Date*	*Calculation No.*	*Rev*
A. Moisan 5/20/98	Glenn Stinson 5/21/98	H21C047	01

CLOUD SHINE

The method of determining the cloud shine dose is taken directly from the model (REF 30) developed by Gibbs & Hill in their 1984 NMP1 Control Room habitability study. Total curies released as a function of time from the DRAGON runs made for Containment Leakage, Bypass Leakage, and ESF Leakage are multiplied by the control room X/Q values to determine the Ci-sec/m^3 in the cloud surrounding the Control Room. This is done in Table 6 on the following pages. This activity is then input to SWEC computer code RADIOISOTOPE to convert the activity to MeV/cm^3 which is then input to a very simple QADMOD model to determine the dose rate to an individual located in the control room at elevation 283' (6' person standing at elevation 277'). The QADMOD model used has to have the flux to dose conversion factors modified to accommodate the unusual source unit input of MeV/cc. This is discussed further in the pages following Table 6.

A card image of RADIOISOTOPE run #2389, dated 05/18/97 is given in APPENDIX A and the results are given below. Note:

- the Xe-131m activity was incorrectly input to RADIOISOTOPE as 3.55E-2 Ci-sec/m3. The correct value is 3.35E-2 Ci-sec/m^3. The impact on the calculated source term is negligible.
- The results are total specific activity integrated over 720 hrs.

Energy (MeV)	Integrated Activity (Mev/cm^3)
0.4	4.74E+04
0.8	1.00E+05
1.3	2.12E+04
1.7	3.34E+04
2.2	9.70E+04
2.5	1.13E+05
3.5	3.86E+03

CALC 42IC 247 REV 01

P 33

TABLE 6
(1 of 1)

CLOUD

TABLE 6 ACTIVITY RELEASED TO ENVIRONMENT													
		0-2 HR							2-720 hr				
		WINCR							WINCR		2-720 hr	TOTAL
ISOTOPE	0-2HR	BP LEAK	X/Q	0-2 HR ACTIVITY	2 hr - 8 hr	8 hr - 24 hr	24 hr - 720 hr	2 HR-720 HR	BP LEAK	X/Q	ACTIVITY	ACT
	(Ci)	(Ci)	(sec/m^3)	(Ci-sec/m^3)	(Ci)	(Ci)	(Ci)	(Ci-sec/m^3)	(Ci)	(sec/m^3)	(Ci-sec/m^3)	(Ci-sec/m^3)
CL 0-10 SEC	1.33E+00	1.33E+00			2.83E+00	1.90E+00	4.43E-01	4.57E+00	4.37E+00			
CL 10 SEC - 720HR	2.35E+01	2.35E+01			7.70E+02	1.39E+03	2.43E+04	2.60E+04	2.60E+04			
ESF 0-10 SEC	2.15E+00	2.16E+00			3.28E+00	3.07E+00	1.16E-01	7.07E+00	7.07E+00			
ESF 10 SEC - 720HR	3.38E+01	3.38E+01			3.87E+02	1.93E+03	2.07E+04	3.31E+04	3.31E+04			
BYPASS LEAK - 1 & 50 SCFH	1.18E+01	5.90E+02			3.49E+01	6.95E+01	1.39E+03	1.51E+03	7.57E+04			
I-111		6.61E+02	3.12E-04	2.07E-01					1.35E+05	1.22E-06	1.64E-01	2.07E-01
CL 0-10 SEC	1.55E+00	1.55E+00			9.23E-01	8.11E-02	1.31E-04	9.04E-01	9.04E-01			
CL 10 SEC - 720HR	2.37E+01	2.37E+01			8.69E+01	3.37E+01	3.63E-01	1.21E+02	1.21E+02			
ESF 0-10 SEC	2.50E+00	2.50E+00			1.33E+00	1.31E-01	2.12E-04	1.46E+00	1.46E+00			
ESF 10 SEC - 720 HR	3.40E+01	3.40E+01			1.25E+02	4.63E+01	5.44E-01	1.74E+02	1.74E+02			
BYPASS LEAK - 1 & 50 SCFH	1.20E+01	6.45E+02			1.30E+0	2.54E+00	2.06E-02	1.56E+01	7.78E+02			
I-112		7.07E+02	3.12E-04	2.21E-01					1.06E+03	1.22E-06	1.29E-01	2.21E-01
CL 0-10 SEC	2.15E+00	2.15E+00			2.03E+00	2.00E+00	2.60E-01	5.31E+00	5.31E+00			
CL 10 SEC - 720HR	3.75E+01	3.75E+01			3.60E+02	1.42E+03	2.54E+03	4.38E+03	4.34E+03			
ESF 0-10 SEC	3.48E+00	3.48E+00			6.74E+00	3.40E+00	4.53E-01	8.59E+00	8.69E+00			
ESF 10 SEC - 720 HR	5.35E+01	5.30E+01			5.46E+02	2.03E+03	3.54E+03	6.17E+03	6.17E+03			
BYPASS LEAK - 1 & 50 SCFH	1.90E+01	9.50E+02			4.99E+0	9.31E+01	1.32E+02	2.75E+02	1.38E+04			
I-113		1.00E+03	3.12E-04	3.27E-01					2.42E+04	1.22E-06	2.96E-04	3.37E-01
CL 0-10 SEC	1.69E+00	1.69E+00			2.24E-01	1.06E-03	6.70E-10	2.25E-01	2.25E-01			
CL 10 SEC - 720HR	2.03E+0	2.03E+01			7.77E+0	3.43E-01	1.63E-06	1.83E+01	1.80E+01			
ESF 0-10 SEC	2.74E+00	2.74E+00			3.80E-01	1.72E-03	1.06E-09	3.65E-01	3.65E-01			
ESF 10 SEC - 720 HR	2.91E+0	2.91E+01			2.54E+0	4.91E+01	2.32E-06	2.53E+01	2.59E+01			
BYPASS LEAK - 1 & 50 SCFH	1.27E+0	6.35E+02			3.75E+00	2.63E-02	8.89E-08	3.29E+00	1.84E+02			
I-114		6.89E+02	3.12E-04	2.15E-01					2.06E+02	1.22E-06	2.50E-04	2.15E-01
CL 0-10 SEC	2.08E+00	2.08E+00			2.17E+00	8.60E-01	3.35E-02	3.03E+00	3.06E+00			
CL 10 SEC - 720 HR	3.50E+0	3.50E+01			2.66E+02	4.92E-02	1.47E+02	9.05E+02	9.85E+02			
ESF 0-10 SEC	3.36E+00	3.36E+00			3.61E+00	1.39E-00	5.43E-02	4.93E+00	4.95E+00			
ESF 10 SEC - 720 HR	5.03E+0	5.03E+01			3.82E+02	7.03E-07	2.07E+07	1.72E+03	1.79E+03			
BYPASS LEAK - 1 & 50 SCFH	1.81E+0	9.05E+02			3.62E+01	3.56E-01	7.73E+00	7.7E+01	3.88E+03			
I-115		9.90E+02	3.12E-04	3.19E-01					6.06E+03	1.22E-06	7.42E-04	3.19E-01
CL 0-10 SEC	1.69E+00	1.69E+00			1.08E-01	4.25E-02	2.01E-05	7.91E-01	7.51E-01			
CL 10 SEC - 720 HR	4.42E+02	4.42E+02			1.25E+03	2.92E-02	9.87E-01	1.51E+03	1.54E+03			
ESF 0-10 SEC	0.00E+00	0.00E+00			0.00E+00	0.00E-00	0.00E+00	0.00E+00	0.00E+00			
ESF 10 SEC - 720 HR	0.00E+00	0.00E+00			0.00E+00	0.00E-00	0.00E+00	0.00E+00	0.00E+00			
BYPASS LEAK - 1 & 50 SCFH	1.39E+0	6.95E+02			1.10E+01	1.27E-00	3.00E-03	1.23E+01	6.14E+02			
KR-0106		1.14E+03	3.12E-04	3.55E-01					2.16E+03	1.22E-06	2.63E-04	3.55E-01
CL 0-10 SEC	4.29E+00	4.29E+00			3.74E+00	1.07E-00	1.74E-02	4.78E+00	4.78E+00			
CL 10 SEC - 720 HR	1.25E+03	1.25E+03			1.84E+03	9.29E-03	1.13E+03	1.83E+04	1.63E+04			
ESF 0-10 SEC	0.00E+00	0.00E+00			0.00E+00	0.00E-00	0.00E+00	0.00E+00	0.00E+00			
ESF 10 SEC - 720 HR	0.00E+00	0.00E+00			0.00E+00	0.00E-00	0.00E+00	0.00E+00	0.00E+00			
BYPASS LEAK - 1 & 50 SCFH	1.89E+0	1.05E+03			8.16E+01	3.68E-01	3.38E+00	1.02E+02	5.09E+03			
KR-0104		5.10E+03	3.12E-04	9.57E-01					2.34E+04	1.22E-06	2.85E-04	9.57E-01
CL 0-10 SEC	2.22E+0	2.22E+01			3.44E-01	3.33E-01	6.39E-02	7.61E-01	7.61E-01			
CL 10 SEC - 720 HR	6.99E+01	6.99E+01			8.15E+02	4.37E-03	1.97E+05	2.02E+05	2.02E+05			
ESF 0-10 SEC	0.00E+00	0.00E+00			0.00E+00	0.00E-00	0.00E+00	0.00E+03	0.00E+00			
ESF 10 SEC - 720 HR	0.00E+00	0.00E+00			0.00E+00	0.00E-00	0.00E+00	0.00E+03	0.00E+00			
BYPASS LEAK - 1 & 50 SCFH	1.98E+0	9.90E+01			5.83E+00	1.58E-01	6.86E+02	7.08E+02	3.54E+04			
KR-45		1.69E+02	3.12E-04	5.28E-02					2.38E+05	1.22E-06	2.90E-03	5.37E-02
CL 0-10 SEC	6.06E+00	6.06E+00			1.56E+00	3.35E-02	1.12E-06	1.60E+00	1.60E+00			
CL 10 SEC - 720 HR	1.46E+03	1.46E+03			2.49E+03	2.08E-02	5.12E-02	2.70E+03	2.70E+03			
ESF 0-10 SEC	0.00E+00	0.00E+00			0.00E+00	0.00E-00	0.00E+00	0.00E+00	0.00E+00			
ESF 10 SEC - 720 HR	0.00E+00	0.00E+00			0.00E+00	0.00E-00	0.00E+00	0.00E+00	0.00E+00			
BYPASS LEAK - 1 & 50 SCFH	1.81E+0	2.41E+03			3.36E+01	9.38E-01	1.57E-04	2.44E+01	1.22E+03			
KR-47		3.87E+03	3.12E-04	1.21E+00					3.92E+03	1.22E-06	4.79E-03	1.21E+00

CALC # 2-CC47 REV 0 P34

TABLE 6 (PAGE 2 OF 2)

CLOUD

TABLE 6 ACTIVITY RELEASED TO ENVIRONMENT												
ISOTOPE	0-2HR (Ci)	0-2 HR W/NCR BP LEAK (Ci)	X/Q (sec/m^3)	0-2 HR ACTIVITY (Ci-sec/m^3)	2 hr - 8 hr (Ci)	8 hr - 24 hr (Ci)	24 hr - 72 hr (Ci)	2 HR-720 HR (Ci-sec/m^3)	2-720 hr W/NCR BP LEAK (Ci)	X/Q (sec/m^3)	2-720 hr ACTIVITY (Ci-sec/m^3)	TOTAL ACT (Ci-sec/m^3)
CL 0-10 SEC	1.05E+01	1.05E+01			6.75E+00	9.73E-01	3.85E-01	7.73E+00	7.73E-00			
CL 10 SEC - 720 HR	2.94E+03	2.94E+03			1.32E+04	7.70E+03	2.17E+02	2.11E+04	2.11E-04			
ESF 0-10 SEC	0.00E+00	0.00E+00			0.00E+00	0.00E+00	0.00E+00	0.00E+00	0.00E-00			
ESF 10 SEC - 720 HR	0.00E+00	0.00E+00			0.00E+00	0.00E+00	0.00E+00	0.00E+00	0.00E-00			
BYPASS LEAK - 1 & 50 SCFH	6.87E+01	2.44E+03			1.06E+02	3.19E+01	6.56E-01	1.41E+02	7.03E+03			
KR-85		7.39E+03	3.12E-04	2.30E+00					2.62E+04	1.22E-06	3.43E-04	2.30E+00
CL 0-10 SEC	1.30E+00	1.30E+00			1.60E-12	0.00E+00	0.00E+00	1.30E-12	1.60E-12			
CL 10 SEC - 720 HR	2.61E+01	2.61E+01			1.39E-09	0.00E+00	0.00E+00	1.39E-09	1.39E-09			
ESF 0-10 SEC	0.00E+00	0.00E+00			0.00E+00	0.00E+00	0.00E+00	0.00E+00	0.00E+00			
ESF 10 SEC - 720 HR	0.00E+00	0.00E+00			0.00E+00	0.00E+00	0.00E+00	0.00E+00	0.00E+00			
BYPASS LEAK - 1 & 50 SCFH	5.02E+00	2.61E+02			2.06E-11	0.00E+00	0.00E+00	2.06E-11	1.04E-09			
KR-88		2.70E+02	3.12E-04	8.69E-02					2.43E-09	1.22E-06	2.97E-10	8.69E-02
CL 0-10 SEC	1.33E-01	1.33E-01			2.05E-01	1.94E-01	4.68E-02	4.46E-01	4.46E-01			
CL 10 SEC - 720 HR	4.20E+01	4.20E+01			4.90E+02	2.84E+03	1.16E+06	1.16E+05	1.16E+05			
ESF 0-10 SEC	4.62E-06	4.62E-06			4.12E-01	1.95E-03	5.58E-04	2.22E-03	2.22E-03			
ESF 10 SEC - 720 HR	3.53E-02	3.53E-02			1.73E+00	2.83E+01	7.94E+05	7.97E+03	7.97E+03			
BYPASS LEAK - 1 & 50 SCFH	1.19E+00	5.86E+01			3.50E+00	9.76E+00	1.68E+02	3.91E+02	1.91E+04			
XE-131M		1.90E+02	3.12E-04	3.17E-02					1.45E+05	1.22E-06	1.77E-05	3.16E-02
CL 0-10 SEC	1.47E-01	1.47E-01			2.28E-01	1.97E-01	4.07E-02	4.69E-01	4.69E-01			
CL 10 SEC - 720 HR	4.86E+01	4.86E+01			6.62E+02	4.47E+03	5.25E+02	5.78E+04	5.78E+04			
ESF 0-10 SEC	1.05E-03	1.05E-03			8.79E-03	2.02E-02	7.81E-03	3.68E-02	3.68E-02			
ESF 10 SEC - 720 HR	4.10E-01	4.10E-01			3.56E+01	4.44E+02	5.12E+05	5.60E+03	5.60E+03			
BYPASS LEAK - 1 & 50 SCFH	1.42E+00	7.19E+01			5.29E+00	1.90E+01	1.82E+02	1.86E+02	9.31E+03			
XE-133M		1.21E+02	3.12E-04	3.77E-02					7.75E+04	1.22E-06	9.45E-05	3.86E-02
CL 0-10 SEC	4.15E+01	4.15E+01			6.29E+01	5.60E+01	1.31E+01	1.34E+02	1.34E+02			
CL 10 SEC - 720 HR	1.30E+04	1.33E+04			1.50E+05	7.80E+05	1.86E+02	1.15E+07	1.15E+07			
ESF 0-10 SEC	1.47E-02	1.47E-02			1.26E-01	3.01E-01	1.26E-01	5.55E-01	5.55E-01			
ESF 10 SEC - 720 HR	1.14E+01	1.16E+01			5.07E+02	6.54E+03	7.45E+05	1.50E+05	1.58E+05			
BYPASS LEAK - 1 & 50 SCFH	3.70E+02	1.85E+04			1.10E+03	2.87E+03	3.33E+04	3.73E+04	1.86E+06			
XE-133		3.13E+04	3.12E-04	9.84E+00					1.35E+07	1.22E-06	1.65E-01	1.00E+01
CL 0-10 SEC	3.90E+00	3.90E+00			3.54E-01	1.38E-01	5.37E-03	4.97E-01	4.97E-01			
CL 10 SEC - 720 HR	9.96E+02	9.93E+02			7.27E+03	3.38E+04	2.07E+04	6.76E+04	6.75E+04			
ESF 0-10 SEC	3.69E-01	3.69E-01			5.61E-01	2.23E-01	8.69E-03	7.93E-01	7.93E-01			
ESF 10 SEC - 720 HR	4.33E+00	4.33E+02			9.94E+03	5.30E+04	4.27E+04	1.08E+05	1.08E+05			
BYPASS LEAK - 1 & 50 SCFH	5.77E+01	2.89E+03			9.35E-01	8.66E+01	2.08E+01	2.00E+02	1.00E+04			
XE-135M		4.32E+03	3.12E-04	1.35E+00					1.83E+05	1.22E-06	2.24E-05	1.35E+00
CL 0-10 SEC	7.20E+00	7.20E+00			3.11E+00	5.13E+00	3.78E-01	1.46E+01	1.46E+01			
CL 10 SEC - 720 HR	2.72E+03	2.72E+03			3.87E+04	1.85E+05	1.82E+05	4.98E+05	4.16E+05			
ESF 0-10 SEC	1.87E-01	1.87E-01			1.26E+00	1.59E+00	1.90E-01	3.04E+00	3.04E+00			
ESF 10 SEC - 720 HR	1.38E+02	1.38E+02			8.60E+03	2.74E+04	2.57E+04	5.77E+04	5.77E+04			
BYPASS LEAK - 1 & 50 SCFH	8.32E+01	4.16E+03			3.64E-02	8.91E+02	6.48E+02	1.80E+03	9.62E+04			
XE-138		7.01E+03	3.12E-04	2.19E+00					6.65E+05	1.22E-06	8.14E-01	2.20E+00
CL 0-10 SEC	8.99E+00	8.99E+00			1.04E-02	1.29E-10	0.00E+00	1.04E-02	1.04E-02			
CL 10 SEC - 720 HR	8.12E+02	8.12E+02			1.04E+01	6.39E-07	0.00E+00	1.04E+01	1.04E+01			
ESF 0-10 SEC	0.00E+00	0.00E+00			0.00E+00	0.00E+00	0.00E+00	0.00E+00	0.00E+00			
ESF 10 SEC - 720 HR	0.00E+00	0.00E+00			0.00E+00	0.00E+00	0.00E+00	0.00E+00	0.00E+00			
BYPASS LEAK - 1 & 50 SCFH	4.93E+01	2.46E+03			1.40E-01	3.16E-09	0.00E+00	1.40E-01	7.00E+00			
XE-138		3.28E+03	3.12E-04	1.02E+00					1.74E+01	1.22E-06	2.12E-01	1.22E+00

Project Nine Mile Point Nuclear Station *Unit* 1 *Disposition* N/A

Originator/Date	*Checker/Date*	*Calculation No.*	*Rev*
A. Moisan 5/20/98	Glenn Stinson 5/21/98	H21C047	01

QADMOD INPUT

As stated previously, the model used is taken from the Gibbs & Hill (G&H) Study but modified to be more rigorous and simpler. G&H calculated (REF 30) that approximately 80,000 cm is equal to 10 mfp in air for the LOCA source term. This is used here along with the top of the floor being at elevation 300' and the receptor being at elevation 283' G&H used a rectangular source model with a very coarse distribution of source points. This analysis uses a cylindrical source model with finer mesh adjacent to the shield. Dose conversion factors resident in QADMOD are modified to convert the unusual source input of MeV/cc. This is discussed below. A sketch of the model used is shown below.

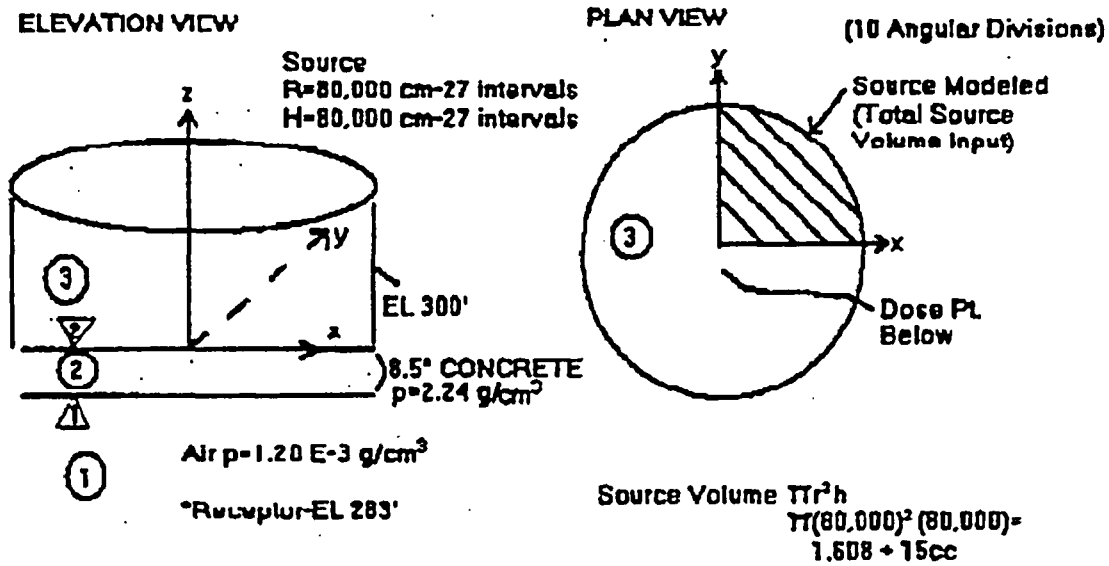

Source Activity From Previous Page
Conversion Factors From Following Page

Project Nine Mile Point Nuclear Station *Unit* 1 *Disposition* N/A

Originator/Date	*Checker/Date*	*Calculation No.*	*Rev*
A. Moisan 5/20/98	Glenn Stimson 5/21/98	H21C047	01

QADMOD conversion factors internal to the code are in units of mRem/hr per MeV/cm^2-sec (found in Appendix B page 1 of QADMOD Users Manual) which assumes either a volumetric source input of Mev/cc-sec and a volume input (cc) or a total source strength of Mev/sec. QADMOD then, normally outputs results in mRem/hr. In this case, the units of input are a volume and a source intensity of MeV/cc. Therefore, the QADMOD conversion factors must be multiplied by a factor of (1 hr/ 3600 sec) * (1 Rem/1000 mRem) This is done below:

Energy (MeV)	QADMOD CF (mRem/hr) per (Mev/cm^2-sec)	New CF (Rem per Mev/cm^2)
0.4	2.10E-03	5.83E-10
0.8	2.00E-03	5.56E-10
1.3	1.80E-03	5.00E-10
1.7	1.70E-03	4.72E-10
2.2	1.60E-03	4.44E-10
2.5	1.50E-03	4.17E-10
3.5	1.40E-03	3.89E-10
6.15	1.10E-03	3.06E-10

The card images of input to QADMOD is shown in APPENDIX A, and the dose results are presented below.

JOB #6106 dated 05/20/98 calculates the 30 day gamma dose to the control room. The result is 0.168 Rem. This is adjusted by the occupancy factor of 0.44 to result in a total dose of 0.074 Rem to an individual in the Control Room.

Project Nine Mile Point Nuclear Station *Unit* 1 *Disposition* N/A

Originator/Date	*Checker/Date*	*Calculation No.*	*Rev*
A. Moisan 5/20/98	Glenn Stinson 5/21/98	H21C047	01

SKYSHINE

Calculation PR-C-23-F (REF 31) calculated the dose to the TSC from air scattered (skyshine) containment radiation for various thickness' of concrete. The 9" results are used here and are assumed to apply to the control room with its 8.5" concrete roof. The 30 day dose calculated on page 20 of REF 31 was 3.88 Rem. The reason for this very high dose rate was the source term was calculated assuming a volume of 1.61E+6 ft^3 and no activity left the reactor building during the entire accident. This resulted in a very different and larger source term than was calculated in this calculation. This will be reduced by a factor of 8 for a skyshine dose for this calculation of 0.485 Rem to the Unit 1 Control Room. The applicability of REF 31 results to this calculation, as well as the basis for the dose reduction of a factor of 8 is as follows:

• The detector location used in REF 31 is at elevation 254' and approximately 388' (see page 11 of REF 31 x coord = 266.75' and y coord = 282') from the RB centerline. The control room detector location used in this calculation is at elevation 283' and approximately (see page 27 for DP A7 used for direct shine calculation) 335' from the RB center line. The difference in distances in the X-Y direction are less than 20% (well within the error of the model, data, and method used). The method used in REF 31 was a COHORT II calculation of a gamma flux to the top of a concrete slab at elevation 261' followed by an ANISN calculation of a dose to a receptor located 7' below the top of the slab. The Control Room receptor is located 17' below the slab at elevation 300'. The difference in elevation is non-conservative. That is the flux above the CR roof at elevation 300' would be greater than the flux above the TSC roof at elevation 261' if the horizontal distances were the same. Therefore, rather than take the full factor of 10 to 12 which the difference in source strength would suggest, a factor of 8 is assumed as the 0.4 and 0.8 MeV energy bins are 12.8 and 10.2 times larger than the corresponding H21C047 activity. Applying a factor of 8 to the 3.88 Rem calculated in REF 31 results in a skyshine dose to the Unit 1 CR of 0.485 Rem which is included in Table 7. Note this dose is not reduced for occupancy as the REF 31 source includes the occupancy factor.

Energy (MeV)	PR-C-23-F SOURCE (MeV-hr)/(cc-sec)	FRACTION OF TOTAL SOURCE	H21C047 Rev 01 SOURCE (MeV-hr)/(cc-sec) (see page 18)	RATIO 23F TO H21C047 Rev 01
0.4	6.49E7	0.790	5.08E6	12.8
0.8	1.49E7	0.181	1.46E6	10.2
1.3	1.01E6	0.012	2.79E5	3.6
1.7	7.90E5	0.010	2.22E5	3.6
2.2	2.89E5	0.004	1.26E5	2.3
2.5	2.69E5	0.003	1.45E5	1.9
3.5	6.57E2	0.000	1.01E2	6.5
TOTAL		1.000		

Project Nine Mile Point Nuclear Station *Unit* 1 *Disposition* N/A

Originator/Date	*Checker/Date*	*Calculation No.*	*Rev*
A. Moisan 5/20/98	Glenn Stinson 5/21/98	H21C047	01

RESULTS

Table 7 below has the doses from all contributors both airborne and direct to the Unit 1 Control Room.

TABLE 7 - UNIT 1 CR DOSE FROM ALL SOURCES

	DOSE(REM)		
RELEASE PATH	THYROID	GAMMA	BETA
CONT LK 0-10 SEC	4.48E-02	9.80E-05	1.24E-03
CONT LK 10 SEC-720 HR	6.53E-01	2.35E-02	3.27E-01
ESF LEAKAGE 0 - 10 SEC	7.22E-02	1.59E-05	1.23E-04
ESF LEAKAGE 0 SEC - 720 HR	9.27E-01	5.57E-04	5.56E-03
BYPASS AT 50 SCFH	1.65E+01	4.12E-02	5.35E-01
CONTAINMENT SHINE	N/A	1.48E-01	N/A
FILTER SHINE	N/A	5.90E-02	N/A
CLOUD SHINE	N/A	7.40E-02	N/A
SKYSHINE	N/A	4.85E-01	N/A
TOTAL	1.82E+01	8.31E-01	8.69E-01

Project Nine Mile Point Nuclear Station *Unit* 1 *Disposition* N/A

Originator/Date	*Checker/Date*	*Calculation No.*	*Rev*
A. Moisan 5/20/98	Glenn Stinson 5/21/98	H21C047	01

CONCLUSIONS

Assuming the following :

1. Containment leakage at 1.5% per day starting at T= 0 seconds reduced for torus scrubbing by a factor of 4.63.
2. ESF Leakage at 750 gph - source 50% core halogens with 10% flash fraction starting at T = 0 seconds.
3. Bypass leakage at 22 psig leaking directly from the primary containment to the turbine building with
   - elemental halogens reduced by a factor 4.63 for torus scrubbing
   - no halogen plateout
   - no holdup in the Turbine Building
   - release from the stack without filtration
4. χ/Q values from the 1984 Gibbs & Hill study.
5. RBEV filtration starting at 10 seconds with filter efficiencies of:
   - 99% for particulate halogens
   - 95% for elemental halogens
   - 90% for methyl halogens
6. CR filtration starting at 24 seconds with filter efficiencies of:
   - 99% for particulate halogens
   - 90% for elemental halogens
   - 90% for methyl halogens
7. CR flow rate of 2500 cfm for the duration of the accident both filtered and unfiltered with 30 cfm of unfiltered inleakage also for the duration of the accident.

Then Unit 1 Control Room Doses are within the dose limits of 10CFR50 Appendix A General Design Criteria (GDC) 19. Table 7 gives the doses calculated.

COMPUTER RUN LOG

JOB #	DATE	DESCRIPTION OF RUN
9725	5/17/98	DRAGON - Cont Leak, ESF Leak, and Bypass Leak
9107	5/16/98	RADIOSIOSTOPE - containment activity
9111	5/16/98	QADMOD - containment shine above refuel floor
9112	5/16/98	QADMOD - containment leak below refuel floor
5908	5/20/98	RADIOSIOTOPE - filter activity
5910	5/20/98	QADMOD- filter shine
2389	5/18/98	RADIOISOTPE - cloud activity
6106	5/20/98	QADMOD - cloud shine

Note: Card images of computer runs listed above are given in APPENDIX A

Project Nine Mile Point Nuclear Station *Unit* 1 *Disposition* N/A

Originator/Date	*Checker/Date*	*Calculation No.*	*Rev*
A. Moisan 5/20/98	Glenn Stinson 5/21/98	H21C047	01

REFERENCES

1. Nine Mile Point Unit 1 Final Safety Analysis Report Revision 14.
   a. Section VII.H, "Emergency Ventilation System."
   b. Section III.B.2.2, "Control Room Heating Ventilation and Air Conditioning System."
   c. Section VI.B.2.1, Page VI-9.
   d. Chapter III.A.2.2, "Turbine Building Heating and Ventilation System"
   e. UFSAR Figure XV-56G
2. Nine Mile Point Unit 1 Technical Specifications.
   a. Section 3.3.3.a, "Limiting Condition for Operation for Leakage Specification."
   b. Section 3.4.4.b, 3.4.4.c, and 3.4.4.d, "Limiting Condition for Operation of Emergency Ventilation System."
   c. Section 3.4.5.b, 3.4.5.c, and 3.4.5.d, "Limiting Condition for Operation of Control Room Air Treatment System."
   d. Facility Operating License which accompanied the Technical Specifications
3. Regulatory Guide 1.3, "Assumptions Used for Evaluating the Potential Radiological Consequences of a Loss Of Coolant Accident for Boiling Water Reactors", Revision 2, June 1974.
4. NUREG-0737, Section III.D.3.4, "Control Room Habitability Requirements."
5. NUREG-0800, U.S. NRC Standard Review Plan .
6. NMPC Letter to NRC, Dated 03/19/84, "Response to TMI Action Item III.D.3.4 - Control Room Habitability."
7. Internal Correspondence, file code M98-014, from T. Mogren to T. Kulczycky dated 5/18/98 "Outside Air Flow Rate for Control Room Ventilation".
8. Calculation SO-EOP-M018 as described in Mechanical Design input to Design Change N1-98-016 dated 5/17/98.
9. Calculation SO-GOTHIC-RB01 as described in Mechanical Design input to Design Change N1-98-016 dated 5/17/98.

Project Nine Mile Point Nuclear Station *Unit* 1 *Disposition* N/A

Originator/Date	*Checker/Date*	*Calculation No.*	*Rev*
A. Moisan 5/20/98	Glenn Stinson 5/21/98	H21C047	01

10. Calculation 1H008 Revision 02, "Control Room Doses Resulting from a Loss of Coolant Accident".

11. 10 Code of Federal Regulation, Part 50, Appendix A, General Design Criteria 19

12. NMPC Calculation No. SO-APPJ-M001, 10CFR50 Appendix J, ILRT & LLRT Acceptance Criteria, Rev 3.

13. System Design Document (SDBD), " Reactor Building HVAC System" SDBD-601, Rev 0, 6/22/94 .

14. Calculation S10-210HV12 and NMPC drawings C18810C sheet 1, C18812C sheet 1, and C18804C sheet 1 as described in Mechanical Design Input to Design Change N1-98-016 dated 5/17/98.

15. NMPC Internal Correspondence, RJ Cazzolli to File, Dated 07/31/87, Subject: Post-Accident Control Room Doses.

16 NMPC Internal Correspondence, MG Annett to T. Kurtz/A. Moisan, Dated 02/18/97, Subject: Unit 1 ESF Leak Rate, File Code M97-011.

17. NRC Regulatory Guide 1.52, "Design, Testing, and Maintenance Criteria for Post Accident Engineered-Safety-Feature Atmosphere Cleanup System Air Filtration and Adsorption Units of Light-Water-Cooled Nuclear Power Plants", Rev 2, March,1978.

18. NRC Regulatory Guide 1.49, Revision 1, "Power Levels of Nuclear Power Plants."

19. G&H Calculation No. N83-1, Rev 1 in CDS as Calc H21C020, " LOCA - CR, TSC & EOF Doses"

20. NMPC Procedure N1-OP-10 Revision 13

21. DRAGON Computer Code, SWEC Number NU-115, Version 5, Level 0.

22. DCR N1-93-001LS213, Control Room Vent Monitor - Modify Software, Attachment 7, "NMP1 SCAM Microcomputer Software Modifications ", pages 7 and 8. Field work completed under SC1-0038-93 and Ops accepted on 11/18/93.

23. NMPC calculation S10-CR277.G36-U1.000, revision 00

24. SWEC Computer code QADMOD NU137 Version 0, Level 3.

25. NMPC calculation S18.9TB300D23U1.210, revision 03

26. NMPC calculation S10-CR277.A-U1.210

Project Nine Mile Point Nuclear Station *Unit* 1 *Disposition* N/A

Originator/Date	*Checker/Date*	*Calculation No.*	*Rev*
A. Moisan 5/20/98	Glenn Stinson 5/21/98	H21C047	01

27. Calculation S0-APPJ-A001, Revision 0.

28. SWEC Computer code RADIOISOTOPE, NU007 Version 01 Level 02

29. Drawing C-15138-C Rev 19.

30. G&H Calculation Shc-PL-07 11/23/83 (in RMS access number 04119 0849)

31. Calculation PR-C-23-F Revision 01, "Skyshine Dose Evaluation for the Technical Support Center Following a Loss of Coolant Accident".

32. " Nuclear Power Plant CR Ventilation System Design", Murphy and Campe, 13th AEC Air Cleaning Conference.

33. NMPC Surveillance Test N1-ST-Q19 as described in Electrical Design Input to Design Change N1-98-016 dated 5/19/98.

34. Calculation SO-GOTHIC-BY01, Revision 0, "Maximum Suppression (Torus) Bypass Fraction".

Project Nine Mile Point Nuclear Station *Unit* 1 *Disposition* N/A

Originator/Date	*Checker/Date*	*Calculation No.*	*Rev*
A. Moisan 5/20/98	Glenn Stinson 5/21/98	H21C047	01

APPENDIX A (14 pages total)

CARD IMAGE OF COMPUTER RUNS

DRAGON 6JUN 9785 5 1 96

1 OF 2

1421C047-01

```
* * * * * * * * * CARD IMAGE OF INPUT SUBMITTED TO DRAGON   * * * * * * * * *

CARD COLUMNS              1         2         3         4         5         6         7         8      CARD COLUMNS
                 12345678901234567890123456789012345678901234567890123456789012345678901234567890
CARD NO.
    1            **UNIT 1 LOCA CL 0-10 SEC W/CR FILTER @ 24 SEC
    2              5   1110 1 0111      0     1.0      0       0  0.052    0.01      1
    3            PRIMARY CONTAINMENT      3.1485      0      0      0      0 0.015      0      0      0
    4            SECONDARY CONTAINMENT    2.1086      0      0      0      0     1.      0      0      0
    5            CONTROL ROOM             1.3185      0      0      0      0     1.     1.     1.    1.0
    6                      5.4747 7.9347 9.0647 1.1748 9.2547
    7                             5.5646 1.2347 5.6645 2.2647 3.2147
    8               3.7747 3.4645 3.7745 1.0646 3.2147 1.8547        8.3047
    9            1         0     0  96.0     0      0 2530. 2530.3.12-4          1      12.78-3
   10            2         0     0  4.83     0      0 2530. 2530.3.12-4          1      16.67-3
   11            3         0     0  4.83  .894   .889 2530. 2530.3.12-4          1      13.33-1
   12            4         0     0  4.83  .894   .889 2530. 2530.3.12-4          1      1    0.5
   13            5         0     0  2.41  .894   .889 2530. 2530.3.12-4          1      1    2.0
   14            6         0     0  2.41  .894   .889 2530. 2530.1.22-8          1      1    8.0
   15            7         0     0  2.41  .894   .889 2530. 2530.1.22-8          1      1   24.0
   16            8         0     0  2.41  .894   .889 2530. 2530.1.22-8          1      1  720.0
   17            **UNIT 1 LOCA CONTAINMENT LEAKAGE 10 SEC-720 HR W/CR FILTERS @ 24 SEC
   18              9   1110 1 0111      0     1.0      0       0  0.052    0.01      1
   19            PRIMARY CONTAINMENT      3.1485      0      0      0      0 0.015      0      0      0
   20            SECONDARY CONTAINMENT    2.1086      0      0      0      0     1.   .952    .90      0
   21            CONTROL ROOM             1.3185      0      0      0      0     1.     1.     1.    1.0
   22                      5.4747 7.9347 9.0647 1.1748 9.2547
   23                             5.5646 1.2347 5.6645 2.2647 3.2147
   24               3.7747 3.4645 3.7745 1.0646 3.2147 1.8547        8.3047
   25            1         0     0  96.0     0.     0 2530. 2530.3.12-4          1      12.78-3
   26            2         1     0  4.83     0      0 2530. 2530.3.12-4          1      16.67-3
   27            3         1     0  4.83  .894   .889 2530. 2530.3.12-4          1      13.33-1
   28            4         1     0  4.83  .894   .889 2530. 2530.3.12-4          1      1    0.5
   29            5         1     0  2.41  .894   .889 2530. 2530.3.12-4          1      1    2.0
   30            6         1     0  2.41  .894   .889 2530. 2530.1.22-8          1      1    8.0
   31            7         1     0  2.41  .894   .889 2530. 2530.1.22-8          1      1   24.0
   32            8         1     0  2.41  .894   .889 2530. 2530.1.22-8          1      1  720.0
   33            **UNIT 1 LOCA ESF LEAKAGE 0-10 SEC W/CR FILTER @ 24 SEC
   34              8   1110 1 0111      0     1.0      0       0  0.048   0.002
   35            TORUS WATER              7.9884      0      0      0      0 .0381      0      0      0
   36            SECONDARY CONTAINMENT    2.1086      0      0      0      0     1.      0      0      0
   37            CONTROL ROOM             1.3185      0      0      0      0     1.     1.     1.    1.0
   38                      5.4747 7.9347 9.0647 1.1748 9.2547
   39                             5.5646 1.2347 5.6645 2.2647 3.2147
   40               3.7747 3.4645 3.7745 1.0646 3.2147 1.8547        8.3047

                 12345678901234567890123456789012345678901234567890123456789012345678901234567890
```

H21C047-01

DRAGON RUN #9725 5/13/98 (p 2 of 2)

```
***** PROGRAM --     DRAGON    -- NU113.VERO6.LEV30-- 4/30/95 -- *****                                                    PAGE

* * * * * * * * * CARD IMAGE OF INPUT SUBMITTED TO DRAGON  * * * * * * * * *

CARD COLUMNS            1         2         3         4         5         6         7         8     CARD COLUMNS
        12345678901234567890123456789012345678901234567890123456789012345678901234567890123456789 0
CARD NO.
   41   1          1    0  96.0     0     0 2530. 2530.3.12-4          1      12.78-3
   42   2          0    0  4.83     0     0 2530. 2530.3.12-4          1      16.67-3
   43   3          0    0  4.83  .894  .889 2530. 2530.3.12-4          1      13.33-1
   44   4          0    0  4.83  .894  .889 2530. 2530.3.12-4          1    1   0.5
   45   5          0    0  2.41  .894  .889 2530. 2530.3.12-4          1    1   2.0
   46   6          0    0  2.41  .894  .889 2530. 2530.1.22-8          1    1   8.0
   47   7          0    0  2.41  .894  .889 2530. 2530.1.22-8          1    1  24.0
   48   8          0    0  2.41  .894  .889 2530. 2530.1.22-8          1    1 720.0
   49  **UNIT 1 LOCA ESF LEAKAGE 10 SEC - 720 HR W/CR FILTER # 24 SEC
   50    8   1110 1 0111      0    1.0     0      0  0.048  0.082
   51  TORUS WATER              7.9844    0     0     0     0 .2301     0     0     0
   52  SECONDARY CONTAINMENT    2.1046    0     0     0     0    1.  .952   .90     0
   53  CONTROL ROOM             1.3145    0     0     0     0    1.    1.    1.   1.0
   54            5.4747 7.9347 9.0647 1.1748 9.2547
   55                         5.6646 1.2347 5.6645 2.2647 3.2147
   56       3.7747 3.4045 3.7745 1.0648 3.2147 1.8547        8.3047
   57   1          1    0  96.0     0     0 2530. 2530.3.12-4          1      12.78-3
   58   2          1    0  4.83     0     0 2530. 2530.3.12-4          1      16.67-3
   59   3          1    0  4.83  .894  .889 2530. 2530.3.12-4          1      13.33-1
   60   4          1    0  4.83  .894  .889 2530. 2530.3.12-4          1    1   0.5
   61   5          1    0  2.41  .894  .889 2530. 2530.3.12-4          1    1   2.0
   62   6          1    0  2.41  .894  .889 2530. 2530.1.22-8          1    1   8.0
   63   7          1    0  2.41  .894  .889 2530. 2530.1.22-8          1    1  24.0
   64   8          1    0  2.41  .894  .889 2530. 2530.1.22-8          1    1 720.0
   65  **UNIT 1 LOCA BYPASS LEAKAGE 1 SCFH CR FILTER # 24 SECONDS - ELEVATED
   66    8   1010 1 0011      0    1.0     0      0  0.052   0.01    1.0
   67  PRIMARY CONTAINMENT      3.1445   0.0   0.0   0.0   0.04.19-5   0.0   0.0   0.0
   68  CONTROL ROOM             1.3145   0.0   0.0   0.0   0.0    1.    1.    1.   1.0
   69     0.0040 5.4747 7.9347 9.0647 1.1748 9.2547 0.0040 0.0040
   70     0.0040 0.0040 0.0040 5.6646 1.2347 5.6645 2.2647 3.2147
   71     3.7747 3.4045 3.7745 1.0648 3.2147 1.8547 0.0040 8.3047
   72   1          1    0    1     0     0 2530. 2530.3.12-4          1      12.78-3
   73   2          1    0    1     0     0 2530. 2530.3.12-4          1      15.67-3
   74   3          1    0    1 0.894 0.889 2530. 2530.3.12-4          1      13.33-1
   75   4          1    0    1 0.894 0.889 2530. 2530.3.12-4          1    1   0.5
   76   5          1    0    1 0.894 0.889 2530. 2530.3.12-4          1    1   2.0
   77   6          1    0    1 0.894 0.889 2530. 2530.1.22-8          1    1   8.0
   78   7          1    0    1 0.894 0.889 2530. 2530.1.22-8          1    1  24.0
   79   8          1    0    1 0.894 0.889 2530. 2530.1.22-8          1    1 720.0

        12345678901234567890123456789012345678901234567890123456789012345678901234567890
```

H21C047-01

2ADIOISOTOPE RUN #9107
5/14/98
(P1 OF 1)

```
***** PROGRAM -- RADIOISOTOPE -- V0007.V0001.LEV02 -- 12/13/83 -- *****                    PAGE   1

* * * * * * * *  CARD IMAGE OF INPUT SUBMITTED TO RADIOISOTOPE   * * * * * * * *

CARD COLUMNS            1         2         3         4         5         6         7         8     CARD COLUMNS
               12345678901234567890123456789012345678901234567890123456789012345678901234567890
CARD NO.
    1            UNIT 1 SECONDARY CONTAINMENT ACTIVITY CI-MP/M**3 CNT LK CSF LK
    2              1    0       0.0       0.0    17    0    0    1
    3                  0.0
    4              1    3.27-1            KR-83M
    5              2    3.25+0            KR-85M
    6              3    3.39+1            KR-85
    7              4    6.73-1            KR-87
    8              5    3.99+0            KR-88
    9              6    2.27-3            KR-89
   10              7    2.00+1            XE-131M
   11              8    1.02+1            XE-133M
   12              9    1.96+3            XE-133
   13             10    1.68+0            XE-135M
   14             11    7.55+1            XE-135
   15             13    9.65-2            XE-138
   16             23    1.80+2            I-131
   17             26    1.11+0            I-132
   18             27    3.37+1            I-133
   19             28    2.80-1            I-134
   20             29    7.27+0            I-135

               12345678901234567890123456789012345678901234567890123456789012345678901234567890
```

H21C04 I-U1

QADMOD RUN# 9111 5/16/98
(2 of 3)

```
***** PROGRAM ----- QADMOD ----- NU137.V6R00.LIV05 --11/29/81 -- *****                                   PAGE 1

* * * * * * * *  CARD IMAGE OF INPUT SUBMITTED TO QADMOD  * * * * * * * *

CARD COLUMNS              1         2         3         4         5         6         7         8      CARD COLUMNS
          12345678901234567890123456789012345678901234567890123456789012345678901234567890123456789012345678901234567890
CARD NO.
    1     ** U1 LOCA DIRECT SHINE TO CONTROL ROOM
    2        0    2    0    2   23   22    1   -3    0   -5  -10  -10
    3                                      1    2
    4              1      0.0       0.0      1.0
    5            0.0  2332.65
    6        2407.92  4038.60
    7            0.0      0.0
    8      1    12       0.0  2332.65       0.0  2332.65
    9      2     3       0.0
   10      3     3  2407.92
   11      4     3  4038.60
   12      5     2  4297.68
   13      6     2  4267.20
   14      7     1  5580.12
   15      8     1  8549.64
   16      9     1 10805.16
   17     10     2  6096.00
   18     11     3  1188.72
   19     12     3  1210.31
   20     13     1  3878.58
   21     14     1  3939.54
   22     15     1  5250.15
   23     16     1  5311.14
   24     17     1 10134.60
   25     18     2 -2438.40
   26     19     2  1219.20
   27     20     2  3627.12
   28     21     2  3688.08
   29     22     3  2194.56
   30     23    12       0.0  2286.93       0.0  2286.93
   31      1     1  1  3  4                                  0.0       0.0   3000.0
   32      2     1  2  3 23                                  0.0       0.0   1000.0
   33      3     1  1  4                                     0.0       0.0   5000.0
   34      4     1  1 13                                  2400.0       0.0      0.0
   35      5     1  2  5  7  9 10 11                       9000.0    5000.0   1000.0
   36      6     2  5  6  7  9 11                          9000.0    4280.0   1000.0
   37      7     2  6  7  8 10 11                          8560.0    5000.0   1000.0
   38      8     2  6  8  9 10 11 12                       9000.0    5000.0   1200.0
   39      9     2  2 13 14 19 21 22                       3900.0    2000.0     10.0
   40     10     2 11 15 16 18 20 22                       5300.0       0.0   2000.0

          12345678901234567890123456789012345678901234567890123456789012345678901234567890123456789012345678901234567890
```

* * * * * * * * CARD IMAGE OF INPUT SUBMITTED TO QADMOD * * * * * * * *

```
CARD COLUMNS              1         2         3         4         5         6         7         8     CARD COLUMNS
          12345678901234567890123456789012345678901234567890123456789012345678901234567890123456789012345678901234567890
CARD NO.
   41     11     2  2 14 17 20 21 22                          9000.0    3650.0      10.0
   42     12     1  6  8 12                                   9000.0    5000.0    2000.0
   43     13     1  8 13 21 22                                8000.0    4000.0    2000.0
   44     14     1  6  8 21 22                                9000.0    4000.0    2000.0
   45     15     1 13 14 19 22                                3900.0       0.0      10.0
   46     16     1 14 15 20 22                                4000.0       0.0      10.0
   47     17     1 16 17 20 22                                8000.0       0.0      10.0
   48     18     1 17 21 22                                  11000.0       0.0      10.0
   49     19     1  6 13 22                                   4000.0       0.0    2500.0
   50     20     1  6  8 13 22                                4000.0    5000.0    2500.0
   51     21     1  2 11 15 16 18 20                          5300.0       0.0    1000.0
   52     22     2  1  2  3 23                                2300.0       0.0      10.0
   53        1.2-3        1
   54                   2.24
   55      23   25
   56      5.08+06  1.46+06  2.79+05  2.22+05  1.26+05  1.45+05  1.01+02
   57          REV PER  SQ CM-SEC   AREM PER          HOUR
   58      8581.00  4298.00   670.56    1                                  DP A1
   59      8581.00  4313.24   670.56    1                                  DP A2
   60      8581.00  4328.48   670.56    1                                  DP A3
   61      8581.00  4450.40   670.56    1                                  DP A4
   62      8581.00  4602.80   670.56    1                                  DP A5
   63      8581.00  4907.60   670.56    1                                  DP A6
   64      8581.00  5517.20   670.56    1                                  DP A7
   65      8596.24  4298.00   670.56    1                                  DP B1
   66      8596.24  4313.24   670.56    1                                  DP B2
   67      8596.24  4328.48   670.56    1                                  DP B3
   68      8611.48  4298.00   670.56    1                                  DP C1
   69      8611.48  4313.24   670.56    1                                  DP C2
   70      8611.48  4328.48   670.56    1                                  DP C3
   71      8611.48  4450.40   670.56    1                                  DP C4
   72      8733.40  4298.00   670.56    1                                  DP D1
   73      8733.40  4328.48   670.56    1                                  DP D3
   74      8733.40  4450.40   670.56    1                                  DP D4
   75      8733.40  4602.80   670.56    1                                  DP D5
   76      8733.40  4907.60   670.56    1                                  DP D6
   77      8733.40  5517.20   670.56    1                                  DP D7
   78      8885.80  4298.00   670.56    1                                  DP E1
   79      8885.80  4450.40   670.56    1                                  DP E4
   80      8885.80  4602.80   670.56    1                                  DP E5
          12345678901234567890123456789012345678901234567890123456789012345678901234567890123456789012345678901234567890
```

QADMOD RUN #9111 5/16/98
(P 2 OF 3)

ITC-CH-1-01

H21C047-01 249

QADMOD RUN # 9111 5/16/98
(P 3 OF 3)

```
***** PROGRAM ----- QADMOD ----- V01M.VERDO.LEV03 --11/25/81 -- *****                    PAGE  7

* * * * * * * *  CARD IMAGE OF INPUT SUBMITTED TO QADMOD  * * * * * * * *

CARD COLUMNS              1         2         3         4         5         6         7         8     CARD COLUMNS
          12345678901234567890123456789012345678901234567890123456789012345678901234567890123456789012345678901234567890
CARD NO.
   91          9190.60  4298.00   670.56    1                                   DP F1
   92          9190.60  4450.40   670.56    1                                   DP F4
   93          9190.60  4907.60   670.56    1                                   DP F6
   94          9190.60  5517.20   670.56    1                                   DP F7
   95          9800.20  4298.00   670.56    1                                   DP G1
   96          9800.20  4450.40   670.56    1                                   DP G4
   97          9800.20  4907.60   670.56    1                                   DP G6
   98          9800.20  5517.20   670.56    1                                   DP G7
   99                                       -1

          12345678901234567890123456789012345678901234567890123456789012345678901234567890123456789012345678901234567890
```

H21C047-01

QADMOD RUN #9112 5/18/98

3 OF 3

P50

***** PROGRAM ----- QADMOD ----- NU137.VE300.LEV01 --11/25/91 -- *****

* * * * * * * * CARD IMAGE OF INPUT SUBMITTED TO QADMOD * * * * * * * *

```
CARD COLUMNS              1         2         3         4         5         6         7         8     CARD COLUMNS
          12345678901234567890123456789012345678901234567890123456789012345678901234567890123456789012345678901234567890
CARD NO.
    1      ** U1 LOCA DIRECT SHINE TO CONTROL ROOM
    2         8    2    0    2   23   22    2   -3    3   -5  -10  -10
    3                                   1    2
    4              1      0.0       0.0      1.0
    5        2145.49  2286.93
    6            0.0  2407.92
    7            0.0      0.0
    8          1   12      0.0  2332.65      0.0  2332.65
    9          2    3      0.0
   10          3    3  2407.92
   11          4    3  4038.60
   12          5    2  4297.68
   13          6    2  4267.20
   14          7    1  8580.12
   15          8    1  8549.64
   16          9    1 10805.16
   17         10    2  6096.00
   18         11    3  1188.72
   19         12    3  1210.31
   20         13    1  3878.58
   21         14    1  3939.54
   22         15    1  5250.18
   23         16    1  5311.14
   24         17    1 10134.60
   25         18    2 -2438.40
   26         19    2  1219.20
   27         20    2  3627.12
   28         21    2  3688.08
   29         22    3  2194.56
   30         23   12      0.0  2286.93      0.0  2286.93
   31          1    1  1  3  4                                  0.0       0.0    3000.0
   32          2    1  2  3 23                                  0.0       0.0    1000.0
   33          3    1  1  4                                     0.0       0.0    5000.0
   34          4    1  1 13                                  2408.0       0.0       0.0
   35          5    1  2  5  7  9 10 11                       4000.0    5000.0    1000.0
   36          6    2  5  6  7  9 11                          4008.0    4200.0    1000.0
   37          7    2  6  7  8 10 11                          8560.0    5000.0    1000.0
   38          8    2  6  8  9 10 11 12                       4008.0    5000.0    1200.0
   39          9    2  2 13 14 19 21 22                       3000.0    2000.0      10.0
   40         10    2 11 15 16 18 20 22                       5300.0       0.0    2000.0
          12345678901234567890123456789012345678901234567890123456789012345678901234567890123456789012345678901234567890
```

QADMOD RUN #9112 5/16/98
(P 2 OF 3)

* * * * * * * * CARD IMAGE OF INPUT SUBMITTED TO QADMOD * * * * * * * *

```
CARD COLUMNS              1         2         3         4         5         6         7         8     CARD COLUMNS
          12345678901234567890123456789012345678901234567890123456789012345678901234567890123456789 0
CARD NO.
   41     11     2  2 14 17 20 21 22                        9000.0    3650.0      10.0
   42     12     1  6  8 12                                 9000.0    5000.0    2000.0
   43     13     1  8 13 21 22                              4000.0    4000.0    2000.0
   44     14     1  6  8 21 22                              9000.0    4000.0    2000.0
   45     15     1 13 14 19 22                              3900.0       0.0      10.0
   46     16     1 14 15 20 22                              4000.0       0.0      10.0
   47     17     1 16 17 20 22                              8000.0       0.0      10.0
   48     18     1 17 21 22                                11000.0       0.0      10.0
   49     19     1  6 13 22                                 4000.0       0.0    2500.0
   50     20     1  6  8 13 22                              4000.0    5000.0    2500.0
   51     21     1  2 11 15 16 18 20                        5300.0       0.0    1000.0
   52     22     2  1  2  3 23                              2300.0       0.0      10.0
   53        1.2-3
   54                2.24
   55      23   25
   56      5.08+06  1.46+06  2.79+05  2.22+05  1.26+05  1.45+05  1.01+02
   57          REV PER  SQ C4-SEC   MREM PER          HOUR
   58      8581.00  4298.00   670.56    1                                DP A1
   59      8581.00  4313.24   670.56    1                                DP A2
   60      8581.00  4328.48   670.56    1                                DP A3
   61      8581.00  4450.40   670.56    1                                DP A4
   62      8581.00  4602.80   670.56    1                                DP A5
   63      8581.00  4907.60   670.56    1                                DP A6
   64      8581.00  5517.20   670.56    1                                DP A7
   65      8596.24  4298.00   670.56    1                                DP B1
   66      8596.24  4313.24   670.56    1                                DP B2
   67      8596.24  4328.48   670.56    1                                DP B3
   68      8611.48  4298.00   670.56    1                                DP C1
   69      8611.48  4313.24   670.56    1                                DP C2
   70      8611.48  4328.48   670.56    1                                DP C3
   71      8611.48  4450.40   670.56    1                                DP C4
   72      8733.40  4298.00   670.56    1                                DP D1
   73      8733.40  4328.48   670.56    1                                DP D3
   74      8733.40  4450.40   670.56    1                                DP D4
   75      8733.40  4602.80   670.56    1                                DP D5
   76      8733.40  4907.60   670.56    1                                DP D6
   77      8733.40  5517.20   670.56    1                                DP D7
   78      8865.80  4298.00   670.56    1                                DP E1
   79      8865.80  4450.40   670.56    1                                DP E4
   80      8865.80  4602.80   670.56    1                                DP E5

          12345678901234567890123456789012345678901234567890123456789012345678901234567890 0
```

QADMOD RUN #9112 5/16/98
(P 3 OF 3)

* * * * * * * * CARD IMAGE OF INPUT SUBMITTED TO QADMOD * * * * * * * *

```
CARD COLUMNS              1         2         3         4         5         6         7         8     CARD COLUMNS
         12345678901234567890123456789012345678901234567890123456789012345678901234567890
CARD NO.
   81          9190.60  4298.00   670.56    1                                  DP F1
   82          9190.60  4450.40   670.56    1                                  DP F4
   83          9190.60  4907.60   670.56    1                                  DP F6
   84          9190.60  5517.20   670.56    1                                  DP F7
   85          9800.20  4298.00   670.56    1                                  DP G1
   86          9800.20  4450.40   670.56    1                                  DP G4
   87          9800.20  4907.60   670.56    1                                  DP G6
   88          9800.20  5517.20   670.56    1                                  DP G7
   89                                      -1
         12345678901234567890123456789012345678901234567890123456789012345678901234567890
```

```
***** PROGRAM -- RADIOISOTOPE -- NU007.VER01.LEV02 -- 12/13/83 -- *****

* * * * * * * *  CARD IMAGE OF INPUT SUBMITTED TO RADIOISOTOPE   * * * * * * * *

CARD COLUMNS              1         2         3         4         5         6         7         8      CARD COLUMNS
          12345678901234567890123456789012345678901234567890123456789012345678901234567890
CARD NO.
    1       UNIT 1 CR FILTER ACTIVITY INPUT AS UCI-HR
    2         1    0        0.)       0.0    5    0    0    3
    3              0.0
    4        25    5.5947             E-131
    5        26    7.7745             E-132
    6        27    1.0447             E-133
    7        28    2.0845             E-134
    8        29    3.1546             E-135

          12345678901234567890123456789012345678901234567890123456789012345678901234567890
```

RADIOISOTOPE RUN # 5908 5:20 32
(P 1 OF 1)

H21L04 1-01

H21C047-01

P.54

QADMOD RUN # 5910 5/20/98
(P 1 OF 1)

```
***** PROGRAM ----- QADMOD ----- NU137.VER00.LEV03 --11/25/81 -- *****                    PAGE  1

* * * * * * * *  CARD IMAGE OF INPUT SUBMITTED TO QADMOD  * * * * * * * *

CARD COLUMNS              1         2         3         4         5         6         7         8     CARD COLUMNS
         12345678901234567890123456789012345678901234567890123456789012345678901234567890123456789012345678901234567890
CARD NO.
    1     ** NMP1 POST-LOCA CR FILTER SHINE DOSE TO CR OPERATOR @ EL 277'0"
    2        8    2    0    7    2    3    1    3    1    0    0    0
    3                                  1    1
    4          0.0       0.0       0.0       1.0
    5     1    1    15.24
    6     2    1    36.83
    7     1    1  1                                          10.0      0.0      0.0
    8     2    2  1  2                                       20.0      0.0      0.0
    9     3    1  2                                         100.0      0.0      0.0
   10       1.2-3
   11                 2.24
   12     23   25
   13     6.47+11  4.49+11  1.26+11  6.40+10  1.46+10  1.32+09  0.00+00
   14         REV PER  SQ CM-SEC   WREM PER         HOUR
   15     533.40      0.00      0.00    1                                CR 283
   16                                  -1

         12345678901234567890123456789012345678901234567890123456789012345678901234567890123456789012345678901234567890
```

RADIOISOTOPE RUN #2389 5/18/98
(P 1 OF 1)

```
***** PROGRAM -- RADIOISOTOPE -- NU067.VER01.LEV02 -- 12/13/83 -- *****                    PAGE  1

* * * * * * * *  CARD IMAGE OF INPUT SUBMITTED TO RADIOISOTOPE   * * * * * * * *

CARD COLUMNS              1         2         3         4         5         6         7         8     CARD COLUMNS
         12345678901234567890123456789012345678901234567890123456789012345678901234567890123456789012345678901234567890
CARD NO.
    1      UNIT 1 CLOUD ACTIVITY CI-SEC/M**3 OUTPUT MEV/CC
    2        1    0       0.0       0.0   17    0    0    1
    3             0.0
    4        1    3.55-1          KR-83M
    5        2    9.67-1          KR-85M
    6        3    5.57-2          KR-85
    7        4    1.21+0          KR-87
    8        5    2.30+0          KR-88
    9        6    8.69-2          KR-89
   10        7    3.55-2          XE-131M
   11        8    3.86-2          XE-133M
   12        9    1.00+1          XE-133
   13       10    1.35+0          XE-135M
   14       11    2.20+0          XE-135
   15       12    1.02+0          XE-138
   16       25    2.05-1          I-131
   17       26    2.21-1          I-132
   18       27    3.27-1          I-133
   19       28    2.15-1          I-134
   20       29    3.11-1          I-135

         12345678901234567890123456789012345678901234567890123456789012345678901234567890123456789012345678901234567890
```

P 56 (LAST)

H21C047-01

QADMOD RUN # 6106 5/20/98 (P1 OF 1)

```
*****  PROGRAM -----  QADMOD  -----   V1.000.LRY01 --11/25/91 -- *****                                   PAG  1

* * * * * * * *  CARD IMAGE OF INPUT SUBMITTED TO QADMOD  * * * * * * * *

CARD COLUMNS          1         2         3         4         5         6         7         8     CARD COLUMNS
12345678901234567890123456789012345678901234567890123456789012345678901234567890
CARD NO.
   1   ** UL CLOUD SHINE TO CONTROL ROOM CALC
   2      8    2    0    2    2    3    3   -2    0   27   27   10
   3                                     1
   4   1.409+15
   5       0.0     10.0     20.0     30.0     40.0     50.0     75.0    100.0
   6     150.0    200.0    250.0    300.0    350.0    400.0    450.0    500.0
   7    1000.0   1500.0   2000.0   3000.0   4000.0   5000.0   7500.0  10000.0
   8   15000.0  20000.0  40000.0  80000.0
   9       0.0     10.0     20.0     30.0     40.0     50.0     75.0    100.0
  10     150.0    200.0    250.0    300.0    350.0    400.0    450.0    500.0
  11    1000.0   1500.0   2000.0   3000.0   4000.0   5000.0   7500.0  10000.0
  12   15000.0  20000.0  40000.0  80000.0
  13       0.0     .1571    .3142    .4712    .6283    .7854    .9425   1.0996
  14    1.2566   1.4137   1.5708
  15   1     3   -21.59
  16   2     3      0.0
  17   1     1  1                                      0.0      0.0    -50.0
  18   2     2  1  2                                   0.0      0.0    -10.0
  19   3     1  2                                      0.5      0.0     10.0
  20     1.2-3
  21              2.24
  22    23   25
  23   4.74+04  1.00+05  2.12+04  3.34+04  9.70+04  1.13+05  3.86+03      0.0
  24   5.33-10  5.56-10  5.00-10  4.72-10  4.44-10  4.17-10  3.89-10  3.06-10
  25    MEV PER     CM**2          RCM
  26       0.0       0.0  -518.16    1                                 DET 1
  27                                 -1

12345678901234567890123456789012345678901234567890123456789012345678901234567890
```

Use of SF_6 for Condenser tube leaks

TABLE OF CONTENTS

Isolation time 10.5 sec

Pg 99 TS Coolant Chemistry 3.2.3 – 25 μCi/g

Page No.

Pg 131 Containment Leak Rate 3.3.3 – 1.5% wt @ 35 psig

3.4.4 – lab test 90% 80°C, 95% RH ±10% flow

Pg 173 SGTS

Pg 178 CK

3.4.5 – in place 99%

Calculation Title Page		1
Table of Contents		2
Objective of Calculation		3
Method		3
Data/Assumptions		4
Table 1 -	Core Inventory	10
Table 2 -	X/Q Values	11
Table 3	CR Vent Monitor Response	11
Calculation		12
Table 4	CR Dose with no filtration	16
Table 5	Ci Rlsd and cpm at CR Monitor - 1.8 scfh	18
Table 6	Ci Rlsd and cpm at CR Monitor - 14 scfh	19
Table 7	CR Doses Filter Actuated at 32 sec	20
Table 8	CR Doses Filter Actuated at 20 Min	21
Results/Conclusions		22
Computer Run Log		23
References		24
APPENDIX A (11 pages) Card image of computer runs		26

in place 1% lab test 3 = 90% @ 80°C 95% RH

±10% flow

Pg VI-7 indicates a peak containment pressure of 50 psig based upon previous purging of drywell N_2 to suppression pool.

Table VI-3a indicates MSIVs part of Containment Type C leak rate testing program.

Containment spray for the drywell and suppression pool Pg VII-80

Pg VII-38 SGTS actuated on either Hi-RAD signal in discharge line of normal Reactor Bldg Exhaust fans or Hi rad signal at refueling platform during refueling operations.

Out of Date

OBJECTIVE OF CALCULATION

The objectives of this calculation are to determine the following:

the amount of bypass leakage that would result in the control room (CR) 30 day LOCA doses in excess of GDC 19 limits without actuation of the CR emergency ventilation (CREV)

the amount of LOCA bypass leakage which will result in CR air intake monitors RAM-210-42A (channel 11) and RAM-210-43A (channel 12) having a count rate ≥ 210 cpm response based on the radioactive concentration at the CR air intake

the time at which the CREV system would have to be manually actuated after a LOCA to assure that GDC 19 doses would not be exceeded.

METHOD

This section provides a brief discussion of the general methodology used in calculating the CR ventilation air intake monitor setpoint for the LOCA releases. Additional details are provided in the specific calculation sections.

The DRAGON computer code (REF 21) is used to calculate isotopic activities in the reactor building, the environment outside and inside the CR, and doses in the CR due to airborne activity. The initial core noble gas and iodine isotopic activities are given in Table 1.

The following sources of radioactive releases are considered in this analysis:

- Leakage from primary containment pressure boundary to secondary containment, hereafter referred to as "containment leakage".

- Leakage from the isolation valves, which become the primary containment pressure boundary during and following a LOCA, to the turbine building, bypassing the secondary containment and hereafter referred to as "bypass leakage."

- Leakage that occurs in secondary containment from the Emergency Safety Feature (ESF) components that recirculate water drawn from the suppression chamber after a LOCA, hereafter referred to as "ESF leakage".

FSAR pg I-9 | Filter flow rate 7.32 x10^6 lb/hr
# of fuel assem. Here = 532

DATA / ASSUMPTIONS

SOURCE TERM PARAMETERS-

1. The reactor is assumed to be operating at 102% of full thermal power at the time of the accident. (REF 5, page 15.6.5-5 and REF 18 recommend that 102% power be used in analyses to allow for possible instrument errors in registering the power level).

pg I-9 FSAR

2. 100% reactor power level is 1850 MWt and 102% power is 1887 MWt. (REF2 d).

3. The radioactive material released from the reactor core and containment are as follows:

   a. 100% of the core noble gases and 25% of the core radioactive iodines are immediately available for release from the primary containment (REF 3, page 1).

   b. of the 25% of core iodines released per item 3.a above, 91% are elemental, 5% are particulate, and 4% are organic. (REF 3, page 1)

      For filtration and bypass leakage computations "elemental" halogens are assumed to include both the elemental and particulate halogens, and the "methyl" halogens are assumed to include only the organic halogens. This results in 0.96 * 0.25 = 0.24 (or 24%) and 0.04 * 0.25 = 0.01 (or 1%) of the core elemental and methyl, respectively, halogens are released to the primary containment atmosphere at time t = 0.

   c. 50% of the core iodine is assumed to be mixed in the sump water being circulated through the containment external piping systems. This is used for ESF leakage calculations (REF 5, Appendix B).

   In clarifying the source term, in section II.B.2 of NUREG 0737 (REF 4), the NRC stated that the source term in liquid-containing systems was 50% of the core halogens in the depressurized cooling water which does not contain noble gas. Also, only halogens are assumed to be present in ESF systems which is also consistent with NUREG 0737.

4. The core inventory in curie/MWt (from REF 19) is multiplied by the core power level of 1850 MWt (DATA/ASSUMPTION #2) and then by 1.02 to account for the instrument uncertainty (DATA/ASSUMPTIONS #1) to give core activity at the time of the accident. These data are given in Table 1.

pg III-10 talks about the CR protecting against all credible accidents

Thermal ventilation = 14,200 cfm
Positive pressure of 1/16"
Emergency flow = 2275 ± 10%

Containment leak rate = 0.5% weight/day @ 62 psig for drywell
= 0.5% weight/day @ 35 psig for suppression pool

PRIMARY CONTAINMENT PARAMETERS

pg VI-1

5. The drywell free volume is 180,000 ft³ and the torus (suppression chamber) free volume is 120,000 ft³ (REF 1.c). Combined, these volumes represent the total primary containment free volume of 3.0E+5 ft³. The initial suppression chamber water volume is 79,800 ft3 (REF 1, Table XV-32a). Although the water and free air volume of the suppression chamber change during the accident, they are assumed, in this analysis, to remain constant for duration of the accident. see FSAR pg VI-3

6. The primary to secondary containment leak rate is 1.1% per day @ 22 psig. This value is consistent with the Licensing basis (REF 6). This leak rate value is limited to 1.5% per day @ 35 psig per Primary Containment Tech Spec Bases 3.3.3 and 4.3.3 (REF 2.a). The maximum allowable leak rate Lt @ pressure Pt can be determine using following equation (REF 12, pages 2 & 3):

Vacuum relief @ -8.94 psi
suppression pool p > drywell p

Lt = La (Ltm/Lam)

Where
Lt = maximum allowable containment leak rate to be measured.
La = maximum allowable containment leak rate at test pressure of Pa as specified for pre-operational test in Tech Spec = 1.5% given.
Ltm = total measured containment leakage @ pressure Pt during the original pre-operational test = 0.47%.
Lam = total measured containment leakage @ pressure Pa during the original pre-operational test = 0.64%.

Substituting values:

Lt = La (Ltm/Lam) = 1.5% (0.47/0.64) = 1.1%

SECONDARY CONTAINMENT PARAMETERS

7. The dual containment design at NMP 1 with a secondary containment which completely surrounds the primary containment and held at a negative pressure of 0.25 inch water gauge, below adjacent regions meets the criteria for the fission product structures for collection and control of the post-accident releases. Also, the return header provides a wide distribution over secondary containment (REF 1, Figure VI-24).Therefore, the leakage from the primary containment is assumed to mix with 50% of the secondary containment volume (REF 10).

turbine shaft seals and condenser

8. The free volume of secondary containment is determined, as shown below:

   a. REF 1.a, page VII-36 states that the RBEV system fan discharge rate is equivalent to one reactor building volume per 24 hours.

      REF 1.a, page VII-39 states that the emergency ventilation fans discharge a volume equivalent to 100% of the building volume per 24 hours.

      REF 1, Section I.B.12.0, page 1-11 states the Design Leakage Rate for secondary containment to be 100% of the free volume per day, via the stack, while maintaining 0.25" water gauge negative pressure in the reactor building relative to atmosphere.

   b. REF 1.a, page VII-56 states that each RBEVS filter bank has a rated flow capacity of 1600 cfm. pg VII-37 FSAR

   c. Based on a. and b. above, if the RBEVS exhausts one building volume per day, at the rate of 1600 cfm, the building free volume can be back calculated as follows:

$$\frac{1600\,ft^3}{\min} x \frac{60\min}{hr} x \frac{24hr}{day} = \frac{2.304E+6\,ft^3}{day} = \frac{1volume}{day}$$

1

Therefore, the secondary containment free air volume used in this calculation is 2.304E+6 ft3 This is a maximum value, back calculated from the RBEV flow rate. As the secondary containment release rate required by the DRAGON computer code is in fractions per day, the actual volume used is irrelevant for release calculations.

9. High radiation must be detected by at least one monitor for a period of 2 to 3 sec to produce an actuation signal (REF 1, Page VII-36). Therefore, a delay of 3 seconds has been introduced to RBEVS to reduce spurious actuations while ensuring a valid actuation occurs. It is assumed that sufficient radiation is present to alarm the monitor at T=0 seconds. For conservatism, a 10 second delay in RBEVS actuation is assumed in this calculation. The reactor building is maintained at a negative pressure of 0.25" water gauge with respect to the atmosphere and is anticipated to be maintained by normal RB ventilation during the 10 second RBEVS delay.

10. The RBEV flow rates are assumed to be:

Table V-1 → 2 pten. Cenin

70,000 cfm (REF 13, Table 3.4-5) unfiltered for the first 10 seconds of the accident while the RBEV is starting

3200 cfm + 10% filtered from 10 seconds to 30 minutes(REF 1.a and REF 20, page 14).

1600 cfm + 10% filtered from 30 minutes to 720 hrs (REF 1.a)

Does the assumed [illegible] with [illegible]

Pg VI-26

11. The Unit 1 Tech Specs. (REF 2b, Section 3.4.4.d) specify operations of RBEVS within ±10% of the design flow rate. Applying the 50% mixing in the secondary containment discussed in DATA/ASSUMPTIONS #7 above, the required release rates (volumes/day) for the DRAGON (REF 21) input are calculated as follows:

Appears that RBEVS [illegible]

FSAR Pg VI-28

High speed purge [illegible] Normal [illegible] 10 sec

70000 cfm *1440 min/day * 2*(1volume/2.304E6ft3) = 87.5 volumes/day 0

3200 cfm *1440 min/day 1.1* 2*(1volume/2.304E6ft3) = 4.4 volumes/day
10 sec - 30 min

1600 cfm *1440 min/day 1.1* 2*(1volume/2.304E6ft3) = 2.2 volumes/day
30 min - 720 hrs

12. The release point for RBEVS is the Main Stack. (REF 1.a, Section VII.H.1.0, page VII-36).

Determine [illegible] 99% [illegible]

13. The iodine removal efficiency of the RBEV filters is assumed to be 99% for particulate and elemental iodine and 90% for organic iodines. The 99% efficiency assumed for particulate and elemental iodines agrees with the original Licensing basis as described in the UFSAR (REF 1, Sections XV.C.5.1.8 and VII-H.2.0) which describes the filter efficiency as 99% for methyl iodide and other iodine forms and the Technical Specifications (REF 2b, Section 3.4.4.b) which gives the halogenated hydrocarbon test requirement of ≥ 99%. The duct heaters which control the humidity less than 70%. Per Regulatory Guide 1.52, Table 2 (REF 17), the filter efficiency should be 95%.

CONTROL ROOM PARAMETERS

14. The free volume of the NMP 1 control room is 1.36E+5 ft³. (REF 14).

15. The control room normal intake rate is 3550 cfm unfiltered. This is calculated by taking the maximum flow rate of 16,300 minus the minimum recirc flow rate of 12,750 cfm (REF 1, Section III-B 2.2). Control room emergency air intake rate is

2875 + 10% cfm, or 3163 cfm (REF 1b, 2c).

The doors of the control room are weather-stripped and the penetrations sealed to maintain a positive pressure of approximately one-sixteenth of an inch of water (REF 1.b, page III-11), however, an unfiltered inleakage of 10 cfm to the control room is assumed per Reference 7, Section III.3.d.(2).(ii). An additional 20 cfm is assumed to account for an unfiltered inleakage (REF 26) through an unsealed drain. The total unfiltered inleakage of 30 cfm combined with DATA/ASSUMPTIONS #15, this makes the total normal air intake rate 3580 cfm and the total emergency air intake rate of 3193 cfm.

The CR emergency filters actuate within 32 seconds, that is, 5 second delay in radiation monitor response and 27 seconds assumed for normal intake valve closure (REF 22 & 23).

The iodine removal efficiencies of the CR emergency filters are assumed to be 99% for the particulate, and 90% for elemental and methyl iodines. The organic halogen filter efficiency is consistent with previous analysis and the elemental/particulate efficiency is more conservative than the 99% given in the Technical Specifications (REF 2c). Weighted filter efficiencies are determined below to account for the 30 cfm unfiltered inleakage to the control room:

$$\text{Elemental efficiency} = \frac{(3163\text{ cfm})(0.90)(91/96) + (3163\text{ cfm})(0.99)(5/96) + (30\text{ cfm})(0)}{3163\text{ cfm} + 30\text{ cfm}} = 0.896$$

$$\text{Methyl efficiency} = \frac{(3163\text{ cfm})(0.90) + (30\text{ cfm})(0)}{3163\text{ cfm} + 30\text{ cfm}} = 0.892$$

BYPASS LEAKAGE PARAMETERS

19. It is assumed that bypass leakage is released unfiltered to the environment via the stack (REF 6).

NOTE: Since bypass leakage is already included in the 1.1% per day containment leak rate, in a rigorous, mechanistic approach, the bypass leakage should be subtracted from the 1.1% per day containment leak rate assumed so that the sum of containment leakage and bypass leakage equals 1.1% containment volumes per day leak rate. Conservatively, this is not done in this calculation.

Not consistent with SRP

ESF LEAKAGE PARAMETERS

20. The ESF leakage is assumed to be 750 gph (REF 16) and is assumed to start at t=0 post-LOCA. Also, ESF leakage is assumed to undergo 50% mixing in the secondary containment. The basis for this assumption is the same as the assumption made for containment leakage (DATA/ASSUMPTIONS #7).

21. The ESF leakage consists of 50% of the core halogen inventory released to the suppression chamber (torus) water of 79,800 ft3 and 10% of the pool halogens that leak to secondary containment are assumed to become airborne instantaneously. This is consistent with REF 5, Section 15.6.5, Appendix B, Part III for water temperatures below 212°F. The suppression chamber water temperature remains well below 2120F (REF 1.e) for entire duration of the accident.

OTHER PARAMETERS

22 A breathing rates (REF 3):

0-720 hrs	3.47E-04 m3/sec

23. Main stack X/Q values used are taken from Reference 19, pages 12 & 13 and given in Table 2. Note: no adjustment factors for 8-24, 24-96, 96-720 hrs were used.

24. RE-210-42 and RE-210-43 detector efficiencies given in Table 3 are taken from reference 25.

25. Because all 3 leakage paths start at T=0 and are assumed to be at a constant leak rate (containment leak 1.1% per day for time 0 to 720 hr, ESF leak 0 to 720 hr at 750 gph, and bypass leakage at a constant rate into the TB starting at T=0), the activity release rate in units of Ci/sec are calculated for the first 27 seconds. This time is chosen arbitrarily but is conservative in that the LOCA release rate in units of Ci/sec will be at its highest in the beginning of the accident prior to decay. That is, the CR vent monitor count rate during the first 27 seconds of the LOCA will be at its' highest as the activity release rate will be at its' highest value. Therefore, if the monitor will not alarm during this time period then it will not alarm at all.

26. The turbine building ventilation flow rate is 1 volume per hour. (REF 1.d)

27. Current min pathway bypass leakage (converted to 22 psig) = 5.28 scfh (REF 27)
    Current max pathway bypass leakage (converted to 22 psig) = 18.36 scfh

28. Revised CR vent monitor setpoint (process limit) 210 cpm. (REF 25).

Table 1

CORE INVENTORY AT 102% THERMAL POWER		
ISOTOPE	ACTIVITY (Ci/MWt)	CORE INVENTORY (Ci)
I-131	2.90E+04	5.47E+07
I-132	4.20E+04	7.93E+07
I-133	4.80E+04	9.06E+07
I-134	6.20E+04	1.17E+08
I-135	4.90E+04	9.25E+07
KR-83M	3.00E+03	5.66E+06
KR-85M	6.50E+03	1.23E+07
KR-85	3.00E+02	5.66E+05
KR-87	1.20E+04	2.26E+07
KR-88	1.70E+04	3.21E+07
KR-89	2.00E+04	3.77E+07
XE-131M	1.80E+02	3.40E+05
XE-133M	2.00E+02	3.77E+05
XE-133	5.60E+04	1.06E+08
XE-135M	1.70E+04	3.21E+07
XE-135	9.80E+03	1.85E+07
XE-138	4.40E+04	8.30E+07

TABLE 1: Ci/MWt from Reference 19, pages 6 & 7, is multiplied by 1850 MWt * 1.02 to determine core inventory.

Table 2

X/Q VALUES @ MAIN STACK RELEASE FOR CONTROL ROOM AIR INTAKE (SEC/M3)	
TIME	X/Q
0-2 HR	3.12E-04
2-720 HR	1.22E-08

TABLE 2: All X/Q values taken from REF 19, pages 12 & 13.

Table 3

Control Room Vent Monitor Response	
Isotope	Conversion Factor cpm/uCi/cc
I-131	1.66E+05
I-132	2.97E+05
I-133	2.88E+05
I-134	3.37E+05
I-135	2.60E+05
KR-83M	0.00E+00
KR-85M	1.89E+05
KR-85	1.99E+05
KR-87	3.70E+05
KR-88	1.86E+05
KR-89	3.45E+05
XE-131M	0.00E+00
XE-133M	0.00E+00
XE-133	6.85E+05
XE-135M	0.00E+00
XE-135	2.55E+05
XE-138	2.90E+05

REF 25

CALCULATION

The DRAGON input description below applies to all runs made except where noted. The inputs are described in three sections;

Containment Leakage
ESF Leakage
Bypass Leakage

CONTAINMENT LEAKAGE

The specified fractions of the reactor core isotopic inventory (Table 1) are released in the primary containment atmosphere volume and leaked into the secondary containment (SC) due to the post-LOCA pressurization of the primary containment. The core inventory which leaked in the SC mixes uniformly with 50% of the SC volume and is finally released to the environment through RBEV.

DRAGON computer code (REF 21) design inputs are as follows:

Core isotopic inventory from Table 1 and DATA/ASSUMPTIONS #4

Atmospheric dispersion factors @ Main Stack for CR Air Intake from Table 2 and DATA/ASSUMPTIONS #12 & 23

Fractions of core activities released to primary containment at time t = 0 sec: 100% core noble gas, 24% core elemental/particulate halogens, and 1% methyl halogens: DATA/ASSUMPTIONS #3.

Primary containment:
volume - 3.0E+5 ft3 : DATA/ASSUMPTIONS #5
leak rate 0.011 vol/day DATA/ASSUMPTIONS #6

Secondary Containment:
volume - 2.304E+6 cubic ft: DATA/ASSUMPTIONS #8c
leak rate (all assume 50% mixing, DATA/ASSUMPTIONS 7)
70000 cfm = 87.50 vol/day for 10 seconds
3200+10% cfm = 4.4 vol/day from 10 seconds to 30 minutes
1600 cfm+10% = 2.2 volumes/day from 30 minutes to 30 days:
DATA/ASSUMPTIONS #11

RBEV Exhaust filter efficiencies:
0 to 10 seconds, No filtration through charcoal filter: DATA/ASSUMPTIONS #9-10
10 seconds until end of accident, elemental & particulate - 0.99, methyl - 0.90:

DATA/ASSUMPTIONS #13

Control Room:

volume - 1.36E+5 cubic ft: DATA/ASSUMPTIONS #14
intake rate 0 to 720 hrs 3580 cfm : DATA/ASSUMPTIONS #15 - 16

Breathing rates DATA/ASSUMPTIONS #22

0-720 hrs 3.47E-04 m3/sec

Note that because of the DRAGON code limitation that secondary containment filtration cannot be varied as a function of time, two runs are made for Containment Leakage:
0 to 10 seconds with no secondary containment filtration
10 seconds to 30 days with secondary containment filtration

ESF LEAKAGE

ESF leakage occurs in secondary containment from the engineering safety feature (ESF) system components that circulate water from the torus after a LOCA. 50% of the core halogens are assumed to be in the torus water available for release. Of the halogens in the water, 10% are assumed to become airborne during the leak (DATA/ASSUMPTIONS # 21).

The ESF leakage rate of 750 gallons per hour (DATA/ASSUMPTION # 20) is converted into a volume/day as follows for input to the DRAGON code:

$$\frac{750gal / hrx0.1336\, ft^3 / galx24hr / day}{79800\, ft^3 / vol} = 3.01E-2vol / day$$

2
The ESF leakage activity available for release is based on the assumptions that 50% of the halogens enter the suppression chamber, and 10% of the halogens in the ESF leakage become airborne immediately (DATA/ASSUMPTIONS # 21), so the halogen release fractions for input to DRAGON become:

96% elemental halogens * 50% * 10% = 0.048
4% methyl halogens * 50% * 10% = 0.002

The remainder of the inputs to DRAGON are given below:

Core activities available for release: Table 1 and DATA/ASSUMPTIONS #4

Atmospheric dispersion factors - Main Stack: Table 2 and DATA/ASSUMPTIONS #12 & 23

Fractions of core activities released to torus water at time t = 0:

0.048 elemental halogens and 0.002% methyl halogens: calculated above. Note that noble gases resulting from the decay of the halogens are released to the secondary containment and to the environment.

Torus water volume:

volume - 7.98E+4 cubic ft: DATA/ASSUMPTIONS #5
leak rate 3.01E-2 vol/day: calculated above

Secondary Containment:

volume - 2.304E+6 cubic ft: DATA/ASSUMPTIONS #8c
leak rate (all assume 50% mixing) - 70000 cfm = 87.50 vol/day for 10 seconds, 3200+10% cfm = 4.4 vol/day from 10 seconds to 30 minutes and 1600 cfm+10% = 2.2 volumes/day from 30 minutes to 30 days: DATA/ASSUMPTIONS #11
exhaust filter efficiencies:
0 to 10 seconds, no filter efficiency : DATA/ASSUMPTIONS #9&10
10 seconds until end of accident elemental/particulate - 0.99
methyl - 0.90: DATA/ASSUMPTIONS #13

Control Room:

volume - 1.36E+5 cubic ft: DATA/ASSUMPTIONS #14
intake rate 0 to 720 hrs 3580 cfm : DATA/ASSUMPTIONS # 15 - 16

Breathing rates DATA/ASSUMPTIONS #22

0-720 hrs	3.47E-04 m3/sec

Note that because of the DRAGON code limitation that secondary containment filtration cannot be varied as a function of time, two runs are made for ESF leakage:
0 to 10 seconds with no secondary containment filtration
10 seconds to 30 days with secondary containment filtration

BYPASS LEAKAGE

Bypass leakage is the activity release pathway where process systems that pass from primary containment to areas outside of secondary containment, "bypassing" the secondary containment ventilation envelope. As a result, the activity is not filtered by RBEV. The release is assumed to be an elevated release through main stack as discussed

in DATA/ASSUMPTIONS # 19. 10 scfh is arbitrarily used and then scaled, as dose varies linearly with leakage. Thus 10 scfh must be converted first to cfh and then volumes per day for input to DRAGON (REF 15). This is done below by application of the ideal gas law.

FLOWs = FLOW rate at standard conditions 14.7 psia and 68° F = 10 scfh
FLOWa = FLOW rate at actual conditions of 22 psig and 262.06° F (262.06° F equals saturated steam temp at 36.7 psia)
Ts = standard temperature = 68°F = 293.2°K
Ta = actual temperature = 262.066°F= 401°K
Ps = standard pressure 14.7 psia
Pa = actual pressure 36.7 psia

$$FLOW_a = \frac{T_a}{T_s} x \frac{P_s}{P_a} x\, FLOW_s = \frac{401^\circ K}{293.2^\circ K} x \frac{14.7psia}{36.7psia} x10.0scfh = 5.48cfh$$

3

Converting this flow rate to volumes per day is calculated as follows:

$$5.48\frac{ft^3}{hr} x24\frac{hr}{day} x \frac{1volume}{3.0E+5\, ft^3} = 4.38E-4\frac{volumes}{day}$$

4

The other inputs to DRAGON are as follows

Core activities available for release: Table 1 and DATA/ASSUMPTIONS #4
Atmospheric dispersion factors - Main Stack: Table 2 and DATA/ASSUMPTIONS # 23
Fractions of core activities released to primary containment at time=0: 100% noble gas, 24% elemental halogens, and 1% methyl halogens: DATA/ASSUMPTIONS #3.

Primary containment:
volume - 3.0E+5 cubic ft: DATA/ASSUMPTIONS #5
leak rate 4.38E-4 vol/day calculated above

Control Room:
volume - 1.36E+5 cubic ft: DATA/ASSUMPTIONS #14
unfiltered intake rate 0 to 720 hrs 3580 cfm : DATA/ASSUMPTIONS #15 & 16

Breathing rates DATA/ASSUMPTIONS # 20

0-720 hrs	3.47E-04 m3/sec

Most of the models analyzed assume the activity is instantaneously released to the

environment with no holdup and no mixing in the Turbine Building. Runs are made with 50% mixing in the Turbine Building to determine impact on unfiltered dose and also to determine required manual actuation of the CR emergency filters.

CASE 1. Doses to the Control Room without actuation of Control Room Emergency Filtration

The following DRAGON runs were made to determine the doses in the control room for the case where the control intake rate is a constant 3580 ft3 /min for the duration of the accident with no control room filtration in operation. Note the results of the 0 -10 second Containment Leakage and ESF leakage cases are somewhat conservative as the model assumes what leaked into the secondary containment in the first 10 seconds continues to leak to the environment without filtration by RBEV, even though the release from the secondary containment would actually be filtered after 10 seconds. This has minimal impact as very little activity is released in the first 10 seconds. Also this conservatism does not significantly impact the CR vent monitor count rate or CR doses.

Containment Leakage:
0-10 seconds - run # 7195 4/24/98
10 seconds to 30 days - run #7195 4/24/98

ESF Leakage:
0-10 seconds - run #8142 4/25/98
10 seconds to 30 days - run #8142 4/25/98

Bypass Leakage -
10 scfh no plateout (all iodine in leakage released to atmosphere) no holdup in TB - run #6541 4/24/98
10 scfh no plateout 50% mixing in TB (48 vol/day release rate) - run #7246 4/24/98

The results are given in Table 4 with the count rates at the CR vent monitor given in Table 5

TABLE 4 - CR DOSES WITH NO FILTRATION				
	DOSE(REM)			DRAGON
RELEASE PATH	THYROID	GAMMA	BETA	RUN
CONT LK 0-10 SEC	9.28E-01	1.68E-04	1.48E-03	7195
CONT LK 10 SEC-720 HR	4.02E+00	1.77E-02	2.35E-01	7195
ESF LEAKAGE 0 - 10 SEC	5.08E-01	5.68E-05	3.54E-04	8142
ESF LEAKAGE 0 SEC - 720 HR	2.19E+00	5.95E-04	5.32E-03	8142
SUBTOTAL	7.65E+00	1.85E-02	2.42E-01	
BYPASS AT 10 SCFH				
NO PLATEOUT NO TB HOLDUP	1.27E+02	2.18E-02	1.94E-01	6541
NO PLATEOUT 50% MIX IN TB	9.55E+01	1.54E-02	1.38E-01	7246
TOTAL DOSES @ 10 SCFH				
NO PLATEOUT NO TB HOLDUP	1.35E+02	4.03E-02	4.36E-01	
NO PLATEOUT 50% MIX IN TB	1.03E+02	3.39E-02	3.80E-01	

As can be seen from Table 4, the limiting dose, as expected is the thyroid dose and obviously 10 scfh bypass leakage is unacceptable. For the no holdup in TB model, the amount of allowable bypass leakage which results in a thyroid dose of 30 Rem is calculated below:

Containment leakage 4.95 Rem Thyroid
ESF leakage 2.70 Rem Thyroid

Thyroid dose available for Bypass Leakage = 30 - (4.95 + 2.70) = 22.35 Rem

$$\frac{22.35\,\mathrm{Rem}}{127\,\mathrm{Rem}/10\,scfh} = 1.8\,scfh$$

For the case with 50% mixing assumed in the TB, the allowable bypass leak becomes

$$\frac{22.35\,\mathrm{Rem}}{95\,\mathrm{Rem}/10\,scfh} = 2.4\,scfh$$

Therefore, with a bypass leakage rate of 1.8 scfh (with no TB holdup) and 2.4 scfh (with 50% mixing in the TB), the thyroid doses in the Control Room, post LOCA, are calculated to be within GDC 19 dose limits without CR ventilation actuation. Note that the present min pathway bypass leakrate is 5.28 scfh.

Next to be determined is the count rate at the CR vent monitor based on activities released in the first 27 seconds. The count rate is calculated in Table 5 below using the curies released from the DRAGON runs listed in Table 4 and the monitor efficiencies listed in Table 3.

TABLE 5 CURIES RELEASED AND CPM AT MONITOR												
NO PLATEOUT NO HOLDUP IN TURBINE BUILDING 1.8 SCFH BYPASS LEAK RATE												
								RELEASE		CONC	MONITOR	
					BYPASS	BYPASS	TOTAL CI	RATE	STACK	AT DUCT	EFF	
	CONT LK	CONT LEAK	ESF LK	ESF LK	10 SCFH	1.8 SCFH	RLSD	CI/SEC	X/Q	INLET	CPM/	MONITOR
ISOTOPE	0-10 SEC	10 - 27 SEC	0-10 SEC	10-27 SEC	0-27 SEC	0-27 SEC	0-27 SEC	0-27 SEC	(SEC/M**3)	(UCI/CC)	UCI/CC	CPM
I-131	1.03E-01	1.74E-04	5.64E-02	9.52E-05	1.87E+00	3.37E-01	4.96E-01	1.84E-02	3.12E-04	5.73E-06	1.66E+05	9.52E-01
I-132	1.49E-01	2.52E-04	8.17E-02	1.38E-04	2.71E+00	4.88E-01	7.19E-01	2.66E-02		8.31E-06	2.97E+05	2.47E+00
I-133	1.71E-01	2.88E-04	9.34E-02	1.58E-04	3.10E+00	5.58E-01	8.23E-01	3.05E-02		9.51E-06	2.88E+05	2.74E+00
I-134	2.20E-01	3.70E-04	1.20E-01	2.03E-04	3.99E+00	7.18E-01	1.06E+00	3.92E-02		1.22E-05	3.37E+05	4.12E+00
I-135	1.74E-01	2.94E-04	9.53E-02	1.61E-04	3.16E+00	5.69E-01	8.39E-01	3.11E-02		9.69E-06	2.60E+05	2.52E+00
KR-83M	4.26E-02	5.28E-03	0.00E+00	0.00E+00	7.74E-01	1.39E-01	1.87E-01	6.93E-03		2.16E-06	0.00E+00	0.00E+00
KR-85M	9.26E-02	1.15E-02	0.00E+00	0.00E+00	1.68E+00	3.02E-01	4.07E-01	1.51E-02		4.70E-06	1.89E+05	8.88E-01
KR-85	4.26E-03	5.30E-04	0.00E+00	0.00E+00	7.75E-02	1.40E-02	1.87E-02	6.94E-04		2.17E-07	1.99E+05	4.31E-02
KR-87	1.70E-01	2.11E-02	0.00E+00	0.00E+00	3.09E+00	5.56E-01	7.47E-01	2.77E-02		8.64E-06	3.70E+05	3.20E+00
KR-88	2.42E-01	3.00E-02	0.00E+00	0.00E+00	4.39E+00	7.90E-01	1.06E+00	3.93E-02		1.23E-05	1.86E+05	2.28E+00
KR-89	2.75E-01	3.26E-02	0.00E+00	0.00E+00	4.91E+00	8.84E-01	1.19E+00	4.41E-02		1.38E-05	3.45E+05	4.75E+00
XE-131M	2.56E-03	3.18E-04	3.51E-09	1.40E-09	4.65E-02	8.37E-03	1.12E-02	4.17E-04		1.30E-07	0.00E+00	0.00E+00
XE-133M	2.84E-03	3.53E-04	8.32E-08	3.31E-08	5.16E-02	9.29E-03	1.25E-02	4.62E-04		1.44E-07	0.00E+00	0.00E+00
XE-133	7.98E-01	9.92E-02	1.16E-06	4.64E-07	1.45E+01	2.61E+00	3.51E+00	1.30E-01		4.05E-05	6.85E+04	2.78E+00
XE-135M	2.41E-01	2.97E-02	9.27E-05	3.69E-05	4.37E+00	7.87E-01	1.06E+00	3.92E-02		1.22E-05	0.00E+00	0.00E+00
XE-135	1.39E-01	1.73E-02	1.44E-05	5.72E-06	2.54E+00	4.57E-01	6.14E-01	2.27E-02		7.09E-06	2.55E+05	1.81E+00
XE138	6.21E-01	7.63E-02	0.00E+00	0.00E+00	1.12E+01	2.02E+00	2.71E+00	1.00E-01		3.14E-05	2.90E+05	9.09E+00
	3.45E+00	3.26E-01	4.47E-01	7.98E-04	6.25E+01	1.12E+01	1.55E+01					3.76E+01
RUN NO	7195	7195	8142	8142	6541							

The 2.4 scfh model with the TB holdup case is not analyzed as it would result in a lower count rate as the curies released would be less due to the holdup in the TB.

CASE 2 Amount of bypass leakage required to obtain a monitor count rate ≥ 210 cpm.

This case does not require additional DRAGON runs as the bypass relationship to Ci released is linear. Therefore, Table 6 is generated by substituting in different values for bypass leakage into the spreadsheet that generated Table 5 until a count rate value of 210 cpm is reached. 210 cpm is chosen as that will be the new setpoint for the CR vent monitors based on the results of Reference 25. Table 6 below shows that a bypass leakage value of 14 scfh will result in a count rate of 222 cpm.

TABLE 6 CURIES RELEASED AND CPM AT MONITOR												
NO PLATEOUT NO HOLDUP IN TURBINE BUILDING 14 SCFH BYPASS LEAK RATE												
								RELEASE		CONC	MONITOR	
					BYPASS	BYPASS	TOTAL CI	RATE	STACK	AT DUCT	EFF	
	CONT LK	CONT LEAK	ESF LK	ESF LK	10 SCFH	14 SCFH	RLSD	CI/SEC	X/Q	INLET	CPM/	MONITOR
ISOTOPE	0-10 SEC	10 - 27 SEC	0-10 SEC	10-27 SEC	0-27 SEC	0-27 SEC	0-27 SEC	0-27 SEC	(SEC/M**3)	(UCI/CC)	UCI/CC	CPM
I-131	1.03E-01	1.74E-04	5.64E-02	9.52E-05	1.87E+00	2.62E+00	2.78E+00	1.03E-01	3.12E-04	3.21E-05	1.66E+05	5.33E+00
I-132	1.49E-01	2.52E-04	8.17E-02	1.38E-04	2.71E+00	3.79E+00	4.03E+00	1.49E-01		4.65E-05	2.97E+05	1.38E+01
I-133	1.71E-01	2.88E-04	9.34E-02	1.58E-04	3.10E+00	4.34E+00	4.60E+00	1.71E-01		5.32E-05	2.88E+05	1.53E+01
I-134	2.20E-01	3.70E-04	1.20E-01	2.03E-04	3.99E+00	5.59E+00	5.93E+00	2.20E-01		6.85E-05	3.37E+05	2.31E+01
I-135	1.74E-01	2.94E-04	9.53E-02	1.61E-04	3.16E+00	4.42E+00	4.69E+00	1.74E-01		5.42E-05	2.60E+05	1.41E+01
KR-83M	4.26E-02	5.28E-03	0.00E+00	0.00E+00	7.74E-01	1.08E+00	1.13E+00	4.19E-02		1.31E-05	0.00E+00	0.00E+00
KR-85M	9.26E-02	1.15E-02	0.00E+00	0.00E+00	1.68E+00	2.35E+00	2.46E+00	9.10E-02		2.84E-05	1.89E+05	5.36E+00
KR-85	4.26E-03	5.30E-04	0.00E+00	0.00E+00	7.75E-02	1.09E-01	1.13E-01	4.20E-03		1.31E-06	1.99E+05	2.61E-01
KR-87	1.70E-01	2.11E-02	0.00E+00	0.00E+00	3.09E+00	4.33E+00	4.52E+00	1.67E-01		5.22E-05	3.70E+05	1.93E+01
KR-88	2.42E-01	3.00E-02	0.00E+00	0.00E+00	4.39E+00	6.15E+00	6.42E+00	2.38E-01		7.42E-05	1.86E+05	1.38E+01
KR-89	2.75E-01	3.26E-02	0.00E+00	0.00E+00	4.91E+00	6.87E+00	7.18E+00	2.66E-01		8.30E-05	3.45E+05	2.86E+01
XE-131M	2.56E-03	3.18E-04	3.51E-09	1.40E-09	4.65E-02	6.51E-02	6.80E-02	2.52E-03		7.86E-07	0.00E+00	0.00E+00
XE-133M	2.84E-03	3.53E-04	8.32E-08	3.31E-08	5.16E-02	7.22E-02	7.54E-02	2.79E-03		8.72E-07	0.00E+00	0.00E+00
XE-133	7.98E-01	9.92E-02	1.16E-06	4.64E-07	1.45E+01	2.03E+01	2.12E+01	7.85E-01		2.45E-04	6.85E+04	1.68E+01
XE-135M	2.41E-01	2.97E-02	9.27E-05	3.69E-05	4.37E+00	6.12E+00	6.39E+00	2.37E-01		7.38E-05	0.00E+00	0.00E+00
XE-135	1.39E-01	1.73E-02	1.44E-05	5.72E-06	2.54E+00	3.56E+00	3.71E+00	1.37E-01		4.29E-05	2.55E+05	1.09E+01
XE138	6.21E-01	7.63E-02	0.00E+00	0.00E+00	1.12E+01	1.57E+01	1.64E+01	6.07E-01		1.89E-04	2.90E+05	5.49E+01
	3.45E+00	3.26E-01	4.47E-01	7.98E-04	6.25E+01	8.74E+01	9.17E+01					2.22E+02
RUN NO	7195	7195	8142	8142	6541							

This table shows that if bypass leakage was in excess of 14 scfh, Control Room ventilation monitor count rate would exceed the alarm setpoint of 210 cpm.

The next question is should the monitor alarm and cause emergency ventilation actuation within 32 seconds, would the existing maximum path bypass leakage result in doses within GDC 19 dose limits. Two DRAGON runs were made:

ESF and Containment Leakage - run #3719 4/28/98 and bypass leakage - run # 5690 4/29/98 with the
with the differences between this run and those previously performed for CASE 1 being:

Control room intake rate (DATA/ASSUMPTIONS #15):
0 - 32 seconds - 3580 cfm unfiltered = 3550 cfm fan flow rate + 30 cfm through doors and drain
32 seconds - 720 hrs - 3193 cfm filtered = 2875 cfm + 10% + 30 cfm through doors and drain

Control Room filter efficiencies - elemental 0.896 and organic 0.892 (DATA/ASSUMPTIONS #18)

The doses are presented below in Table 7. Note the conservative assumption of no holdup in the TB and no plateout.

TABLE 7 - CR DOSE				
CR FILTRATION ACTUATION AT 32 SEC				
	DOSE(REM)			DRAGON
RELEASE PATH	THYROID	GAMMA	BETA	RUN
CONT LK 0-10 SEC	1.25E-01	9.29E-05	1.04E-03	3719
CONT LK 10 SEC-720 HR	4.22E-01	1.71E-02	2.30E-01	3719
ESF LEAKAGE 0 - 10 SEC	6.84E-02	1.61E-05	1.19E-04	3719
ESF LEAKAGE 0 SEC - 720 HR	2.30E-01	4.21E-04	4.32E-03	3719
SUBTOTAL	8.45E-01	1.76E-02	2.35E-01	
BYPASS AT 10 SCFH				
NO PLATEOUT NO TB HOLDUP	1.38E+01	1.17E-02	1.35E-01	5690
BYPASS AT 18.36 SCFH				
	2.53E+01	2.15E-02	2.48E-01	
TOTAL DOSES @ 18.36SCFH				
NO PLATEOUT NO TB HOLDUP	2.62E+01	3.91E-02	4.83E-01	

CASE 3 Time at which CR emergency ventilation would have to be manually activated to ensure doses less than GDC limits.

A number of runs were made with the time of actuation of the filters varied to determine the time at which the operators would have to actuate the CR filters. Only the runs which support the final answer are included.

The DRAGON models were modified as follows:

Control room intake rate (DATA/ASSUMPTIONS #15):
0 seconds to time of filter actuation - 3580 cfm = 3550 cfm fan flow rate + 30 cfm through doors and drain
time of filter actuation to 720 hours - 3193 cfm = 2875 cfm + 10% + 30 cfm through doors and drain

Control Room filter efficiencies - elemental 0.896 and organic 0.892 (DATA/ASSUMPTIONS #18)

Bypass leakage was assumed to undergo 50% mixing in the Turbine Building. This assumption was made to more realistically model the accident and while somewhat reducing the conservatism of the previous analysis, it is still conservative as no credit is being taken for plateout of the iodine. This analysis assumes all the iodine associated with the bypass leakage is released into the air.

The results of the following DRAGON runs are given below in Table 8 - all runs are with CR filters on at 20 min:

Containment Leakage:
0-10 seconds - run # 2641 4/28/98
10 seconds to 30 days - run #2641 4/28/98

ESF Leakage:
0-10 seconds - run #2641 4/28/98
10 seconds to 30 days - run #26414/28/98

Bypass Leakage - run #8827, 4/26/98
0-720 hrs - 10 scfh leak rate, 50% mixing in TB, no plateout

TABLE 8 - CR DOSES				
CR FILTRATION ACTUATION AT 20 MIN				
	DOSE(REM)			DRAGON
RELEASE PATH	THYROID	GAMMA	BETA	RUN
CONT LK 0-10 SEC	3.79E-01	1.23E-04	1.22E-03	2641
CONT LK 10 SEC-720 HR	6.34E-01	1.72E-02	2.32E-01	2641
ESF LEAKAGE 0 - 10 SEC	2.07E-01	3.14E-05	2.06E-04	2641
ESF LEAKAGE 0 SEC - 720 HR	3.46E-01	4.34E-04	4.40E-03	2641
SUBTOTAL	1.57E+00	1.78E-02	2.38E-01	
BYPASS AT 10 SCFH				
NO PLATEOUT 50% MIX IN TB	1.56E+01	8.81E-03	9.89E-02	8827

Table 8 shows that 1 scfh of bypass leakage results in 1.56 Rem thyroid. The current max pathway bypass leakage (when adjusted to 22 psig which this calculation assumes) is 18.36 scfh. This makes the total thyroid dose:

Containment Leak + Bypass Leak	=	1.57 Rem
Bypass Leak 18.36 scfh * 1.56 Rem/scfh	=	28.64 Rem
Total	=	30.21 Rem

Therefore, assuming the model described above, the control room emergency filtration must be actuated in less than 20 minutes to ensure that the Control Room doses are within GDC 19 limits.

RESULTS/CONCLUSIONS

CASE 1 - Doses to the Control Room without actuation of Control Room Emergency Filtration.

CASE 2 - Amount of bypass leakage required to obtain a monitor count rate ≥ 210 cpm

Assuming the following :

Containment leakage at 1.1% per day starting at T= 0 seconds.

ESF Leakage at 750 gph - source 50% core halogens with 10% flash fraction starting at T = 0 seconds.

RBEV filter actuation at T = 10 seconds.

Bypass leakage at 22 psig leaking directly from the primary containment to the turbine building with no halogen plateout and no holdup in the Turbine Building.

The following doses to the control room with and without actuation of the Control Room filters -

For bypass leakage less than 1.8 scfh , doses to the CR would be less than GDC 19 requirements and the CR vent monitor would not alarm. Note: assuming 50% mixing in the TB, the allowable bypass leakage would increase to 2.4 scfh.

For bypass leakage greater than 1.8 scfh and less than 14 scfh, the CR vent monitor would not alarm and with no actuation of CR filters, GDC 19 doses would be exceeded.

For bypass leakage greater than 14 scfh and less than the current max pathway leak rate of 18.36 scfh, the CR vent monitor count rate would exceed 210 cpm , actuate the monitor and doses would be within GDC 19 limits provided the bypass leakage remained below the current max pathway value of 18.36 scfh

Given the model described in CASE 1, 14 scfh is the minimum bypass leakage rate that results in a CR monitor count rate > 210 cpm

CASE 3 - Time at which CR emergency ventilation would have to be manually activated to ensure doses less than GDC 19 limits.

Given the model described in CASE 1 with the exception of the assumption of 50% mixing in the Turbine Building, CR emergency filtration would have to actuated in less than 20 minutes to ensure doses less than GDC 19 limits.

COMPUTER RUN LOG

JOB #	DATE	DESCRIPTION OF RUN
7195	4/24/98	Containment Leak - no CR filters
8142	4/25/98	ESF Leak - no CR filters
6541	4/24/98	Bypass leak - no CR filters
7246	4/24/98	Bypass leak 50% mix in TB - no CR filters
3719	4/28/98	Cont,. leak & ESF leak - CR filt actuation at t=32 sec
5690	4/29/98	Bypass leak - CR filt actuation at t=32 sec
2641	4/28/98	Cont leak & ESF leak - CR filt actuation at t=20 min
8827	4/26/98	Bypass leak - CR filt actuation at t=20 min

Note: Card images of computer runs listed above are given in APPENDIX A

REFERENCES

1. Nine Mile Point Unit 1 Final Safety Analysis Report Revision 14.

   a. Section VII.H, "Emergency Ventilation System."

   b. Section III.B.2.2, "Control Room Heating Ventilation and Air Conditioning System."

   c. Section VI.B.2.1, Page VI-9.

   d. Chapter III.A.2.2, "Turbine Building Heating and Ventilation System"

   e. UFSAR Figure XV-56G

Nine Mile Point Unit 1 Technical Specifications.

a. Section 3.3.3.a, "Limiting Condition for Operation for Leakage Specification."

   b. Section 3.4.4.b, 3.4.4.c, and 3.4.4.d, "Limiting Condition for Operation of Emergency Ventilation System."

   c. Section 3.4.5.b, 3.4.5.c, and 3.4.5.d, "Limiting Condition for Operation of Control Room Air Treatment System."

   d. Facility Operating License which accomapanied the Technical Specifications

3. Regulatory Guide 1.3, "Assumptions Used for Evaluating the Potential Radiological Consequences of a Loss Of Coolant Accident for Boiling Water Reactors", Revision 2, June 1974.

4. NUREG-0737, Section III.D.3.4, "Control Room Habitability Requirements."

5. NUREG-0800, U.S. NRC Standard Review Plan Chapter 15.6.5, Appendix A & B.

6. NMPC Letter to NRC, Dated 03/19/84, "Response to TMI Action Item III.D.3.4 - Control Room Habitability."

7. NUREG-0800, Standard Review Plan 6.4, "Control Room Habitability System."

8. Not used.

9. Not used.

10. NUREG 0800, US NRC Standard Review Plan Chapter 6.5.3, Rev 2, "Fission Product Control Systems and Structures."

11. 10 Codes of Federal Regulation, Part 50, Appendix A, General Design Criteria 19.

12. NMPC Calculation No. SO-APPJ-M001, 10CFR50 Appendix J, ILRT & LLRT Acceptance Criteria, Rev 3.

13. System Design Document (SDBD), " Reactor Building HVAC System" SDBD-601, Rev 0, 6/22/94.

14. NMPC Internal Correspondence, R.J. Cazzolli to Distribution, Dated 08/30/91, Subject: DBD Input, File Code: SM-HP91-0115.

15. NMPC Internal Correspondence, RJ Cazzolli to File, Dated 07/31/87, Subject: Post-Accident Control Room Doses.

16 NMPC Internal Correspondence, MG Annett to T. Kurtz/A. Moisan, Dated 02/18/97, Subject: Unit 1 ESF Leak Rate, File Code M97-011.

17. NRC Regulatory Guide 1.52, "Design, Testing, and Maintenance Criteria for Post Accident Engineered-Safety-Feature Atmosphere Cleanup System Air Filtration and Adsorption Units of Light-Water-Cooled Nuclear Power Plants", Rev 2, March,1978.

18. NRC Regulatory Guide 1.49, Revision 1, "Power Levels of Nuclear Power Plants."

19. G&H Calculation No. N83-1, Rev 1 in CDS as Calc H21C020, " LOCA - CR, TSC & EOF Doses"

20. NMPC Procedure N1-OP-10 Revision 13

DRAGON Computer Code, SWEC Number NU-115, Version 5, Level 0.

DCR N1-93-001LS213, Control Room Vent Monitor - Modify Software, Attachment 7, "NMP1 SCAM Microcomputer Software Modifications ", pages 7 and 8. Field work completed under SC1-0038-93 and Ops accepted on 11/18/93.

NMPC calculation S10-CR277.G36-U1.000, revision 00

Not used.

NMPC calculation S18.9TB300D23U1.210, revision 03

26 NMPC calculation S10-CR277.A-U1.210

27. Calculation S0-APPJ-A001, Revision 0.

APPENDIX A (11 pages total)

CARD IMAGE OF COMPUTER RUNS