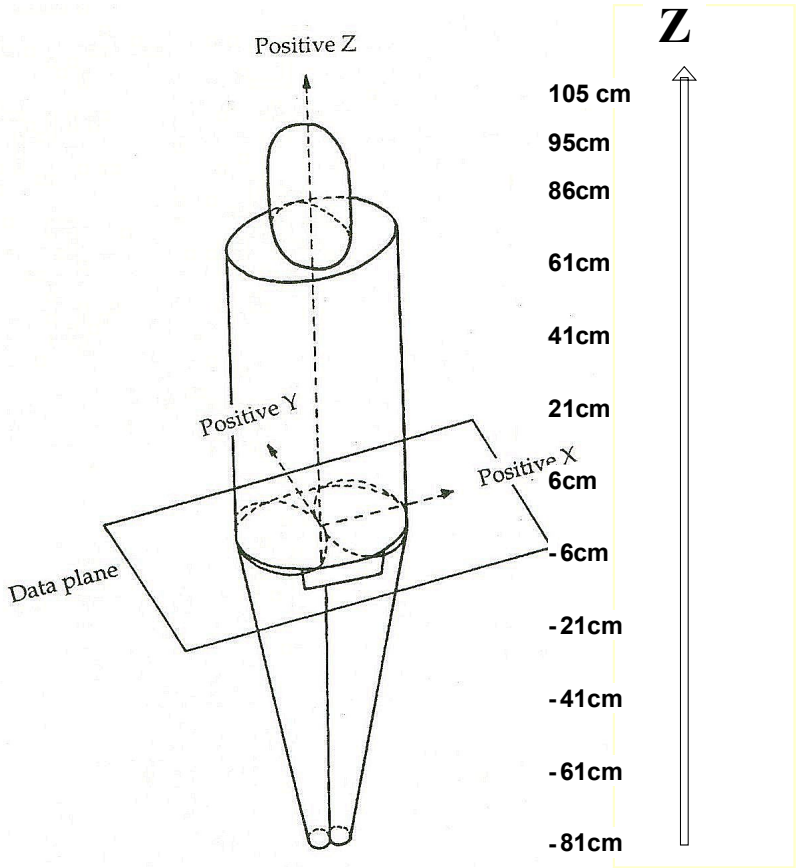

Figure 1. A data plane is a 2D cross section defined by the X-Y coordinate for each height Z. Z = 95 cm corresponds to the top of the head, Z= 0 cm is the upper end of the legs, and Z= - 81 cm is the bottom of the feet.

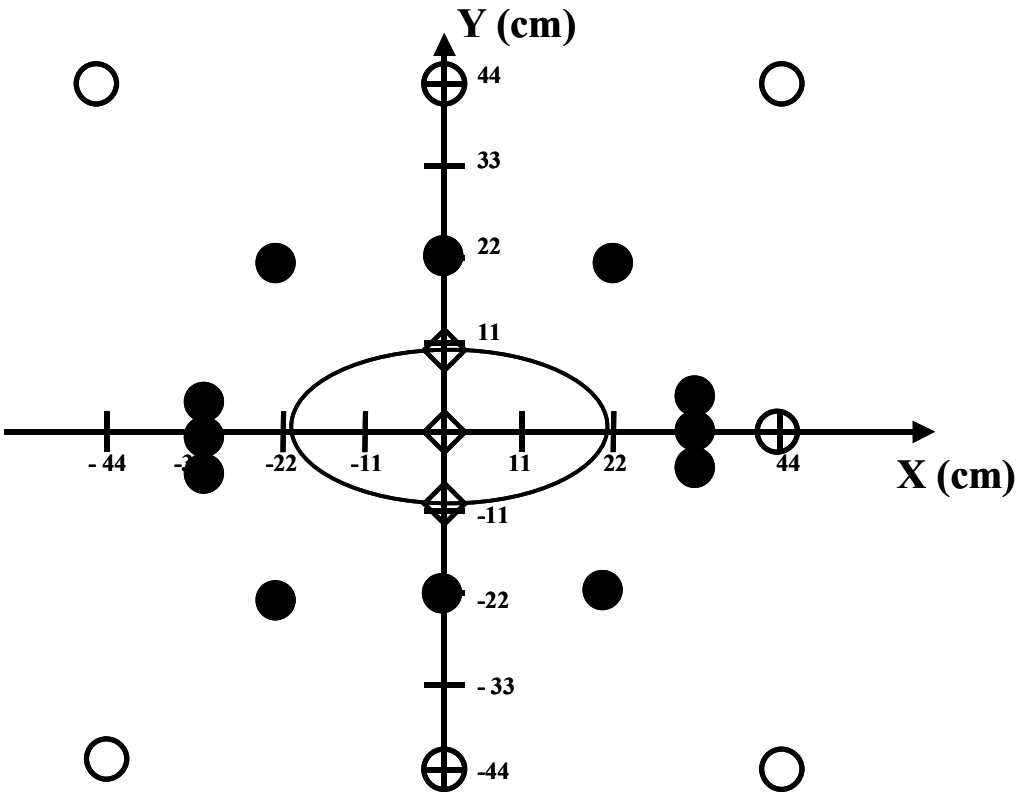

Figure 2. For each data plane, the phantom faces the negative Y axis, with the left side of the phantom pointing to the positive X. The empty circles are the locations studied before (only at Z = 41 cm and Z = 6 cm, for 0.08 MeV, 0.3 MeV and 1 MeV, respectively). The solid circles are the new locations calculated in this study for Z from 105 cm to –81cm, for 0.3 MeV, 1.0 MeV and 1.5 MeV, respectively. Diamonds are additional locations for Z=105 cm (overhead) only.

Table 1. Ratio of the assessed effective dose equivalent, H'_E , to the actual effective dose equivalent, H_E, for 0.3 MeV point photon sources defined by X and Y data plane at Z = 105 cm.

Energy	X	Y	Z	A3
(MeV)	(cm)	(cm)	(cm)	
0.3	0	0	105	0.02
0.3	0	-10	105	0.78
0.3	0	10	105	1.00
0.3	0	-22	105	0.93
0.3	22	-22	105	1.05
0.3	-22	-22	105	1.05
0.3	33	-5	105	0.72
0.3	-33	-5	105	0.72
0.3	33	0	105	0.16
0.3	-33	0	105	0.16
0.3	33	5	105	1.09
0.3	-33	5	105	1.09
0.3	22	22	105	1.50
0.3	-22	22	105	1.50
0.3	0	22	105	1.39
			Average=	**0.88**

Table 2. Ratio of the assessed effective dose equivalent, H'_E , to the actual effective dose equivalent, H_E, for 0.3 MeV point photon sources defined by X and Y data plane at Z = 81 cm.

Energy	X	Y	Z	A3
(MeV)	(cm)	(cm)	(cm)	
0.3	0	-22	81	0.80
0.3	22	-22	81	1.00
0.3	-22	-22	81	1.00
0.3	33	-5	81	0.50
0.3	-33	-5	81	0.50
0.3	33	0	81	0.25
0.3	-33	0	81	0.25
0.3	33	5	81	1.18
0.3	-33	5	81	1.18
0.3	22	22	81	1.44
0.3	-22	22	81	1.44
0.3	0	22	81	1.25
			Average=	**0.90**

Table 3. Ratio of the assessed effective dose equivalent, H'_E , to the actual effective dose equivalent, H_E, for 0.3 MeV point photon sources defined by X and Y data plane at Z = 61 cm.

Energy	X	Y	Z	A3
(MeV)	(cm)	(cm)	(cm)	
0.3	0	-22	61	1.14
0.3	22	-22	61	1.14
0.3	-22	-22	61	1.14
0.3	33	-5	61	1.09
0.3	-33	-5	61	1.09
0.3	33	0	61	0.46
0.3	-33	0	61	0.46
0.3	33	5	61	1.48
0.3	-33	5	61	1.48
0.3	22	22	61	1.88
0.3	-22	22	61	1.88
0.3	0	22	61	2.13
			Average=	**1.28**

Table 4. Ratio of the assessed effective dose equivalent, H'_E , to the actual effective dose equivalent, H_E, for 0.3 MeV point photon sources defined by X and Y data plane at Z = 41 cm.

Energy	X	Y	Z	A3
(MeV)	(cm)	(cm)	(cm)	
0.3	0	-22	41	4.58
0.3	22	-22	41	1.63
0.3	-22	-22	41	1.63
0.3	33	-5	41	1.46
0.3	-33	-5	41	1.46
0.3	33	0	41	0.55
0.3	-33	0	41	0.55
0.3	33	5	41	1.53
0.3	-33	5	41	1.53
0.3	22	22	41	2.13
0.3	-22	22	41	2.13
0.3	0	22	41	5.98
			Average=	**2.09**
0.3	0	-44	41	1.73
0.3	44	-44	41	1.37
0.3	44	0	41	1.32
0.3	44	44	41	1.79
0.3	0	44	41	2.22

Table 5. Ratio of the assessed effective dose equivalent, H'_E , to the actual effective dose equivalent, H_E, for 0.3 MeV point photon sources defined by X and Y data plane at Z = 21 cm.

Energy	X	Y	Z	A3
(MeV)	(cm)	(cm)	(cm)	
0.3	0	-22	21	1.36
0.3	22	-22	21	1.26
0.3	-22	-22	21	1.26
0.3	33	-5	21	1.37
0.3	-33	-5	21	1.37
0.3	33	0	21	0.45
0.3	-33	0	21	0.45
0.3	33	5	21	1.48
0.3	-33	5	21	1.48
0.3	22	22	21	1.67
0.3	-22	22	21	1.67
0.3	0	22	21	1.83
			Average=	**1.30**

Table 6. Ratio of the assessed effective dose equivalent, H'_E , to the actual effective dose equivalent, H_E, for 0.3 MeV point photon sources defined by X and Y data plane at Z = 6 cm.

Energy	X	Y	Z	A3
(MeV)	(cm)	(cm)	(cm)	
0.3	0	-22	6	0.48
0.3	22	-22	6	0.76
0.3	-22	-22	6	0.76
0.3	33	-5	6	1.11
0.3	-33	-5	6	1.11
0.3	33	0	6	0.29
0.3	-33	0	6	0.29
0.3	33	5	6	1.27
0.3	-33	5	6	1.27
0.3	22	22	6	1.27
0.3	-22	22	6	1.27
0.3	0	22	6	0.99
			Average=	**0.91**
0.3	0	-44	6	0.99
0.3	44	-44	6	1.12
0.3	44	0	6	1.02
0.3	44	44	6	1.55
0.3	0	44	6	1.65

Table 7. Ratio of the assessed effective dose equivalent, H'_E , to the actual effective dose equivalent, H_E, for 0.3 MeV point photon sources defined by X and Y data plane at Z = -21 cm.

Energy	X	Y	Z	A3
(MeV)	(cm)	(cm)	(cm)	
0.3	0	-22	-21	0.44
0.3	22	-22	-21	0.65
0.3	-22	-22	-21	0.65
0.3	33	-5	-21	1.23
0.3	-33	-5	-21	1.23
0.3	33	0	-21	0.14
0.3	-33	0	-21	0.14
0.3	33	5	-21	1.40
0.3	-33	5	-21	1.40
0.3	22	22	-21	1.32
0.3	-22	22	-21	1.32
0.3	0	22	-21	0.86
			Average=	**0.90**

Table 8. Ratio of the assessed effective dose equivalent, H'_E , to the actual effective dose equivalent, H_E, for 0.3 MeV point photon sources defined by X and Y data plane at Z = -41 cm.

Energy	X	Y	Z	A3
(MeV)	(cm)	(cm)	(cm)	
0.3	0	-22	-41	0.63
0.3	22	-22	-41	0.76
0.3	-22	-22	-41	0.76
0.3	33	-5	-41	1.52
0.3	-33	-5	-41	1.52
0.3	33	0	-41	0.08
0.3	-33	0	-41	0.08
0.3	33	5	-41	1.84
0.3	-33	5	-41	1.84
0.3	22	22	-41	1.61
0.3	-22	22	-41	1.61
0.3	0	22	-41	1.11
			Average=	**1.11**

Table 9. Ratio of the assessed effective dose equivalent, H'_E , to the actual effective dose equivalent, H_E, for 0.3 MeV point photon sources defined by X and Y data plane at Z = -61 cm.

Energy	X	Y	Z	A3
(MeV)	(cm)	(cm)	(cm)	
0.3	0	-22	-61	0.81
0.3	22	-22	-61	0.87
0.3	-22	-22	-61	0.87
0.3	33	-5	-61	1.10
0.3	-33	-5	-61	1.10
0.3	33	0	-61	0.07
0.3	-33	0	-61	0.07
0.3	33	5	-61	1.34
0.3	-33	5	-61	1.34
0.3	22	22	-61	2.04
0.3	-22	22	-61	2.04
0.3	0	22	-61	1.55
			Average=	1.10

Table 10. Ratio of the assessed effective dose equivalent, H'_E , to the actual effective dose equivalent, H_E, for 0.3 MeV point photon sources defined by X and Y data plane at Z = -81 cm.

Energy	X	Y	Z	A3
(MeV)	(cm)	(cm)	(cm)	
0.3	0	-22	-81	0.93
0.3	22	-22	-81	1.09
0.3	-22	-22	-81	1.09
0.3	33	-5	-81	0.91
0.3	-33	-5	-81	0.91
0.3	33	0	-81	0.09
0.3	-33	0	-81	0.09
0.3	33	5	-81	1.42
0.3	-33	5	-81	1.42
0.3	22	22	-81	2.88
0.3	-22	22	-81	2.88
0.3	0	22	-81	2.24
			Average=	1.33

Table 11. Ratio of the assessed effective dose equivalent, H'_E, to the actual effective dose equivalent, H_E, for 1.0 MeV point photon sources defined by X and Y data plane at Z = 105 cm.

Energy	X	Y	Z	A3
(MeV)	(cm)	(cm)	(cm)	
1	0	0	105	0.07
1	0	-10	105	0.72
1	0	10	105	0.90
1	0	-22	105	0.82
1	22	-22	105	0.96
1	-22	-22	105	0.96
1	33	-5	105	0.82
1	-33	-5	105	0.82
1	33	0	105	0.30
1	-33	0	105	0.30
1	33	5	105	1.04
1	-33	5	105	1.04
1	22	22	105	1.27
1	-22	22	105	1.27
1	0	22	105	1.14
			Average=	0.83

Table 12. Ratio of the assessed effective dose equivalent, H'_E, to the actual effective dose equivalent, H_E, for 1.0 MeV point photon sources defined by X and Y data plane at Z = 81 cm.

Energy	X	Y	Z	A3
(MeV)	(cm)	(cm)	(cm)	
1	0	-22	81	0.73
1	22	-22	81	0.93
1	-22	-22	81	0.93
1	33	-5	81	0.66
1	-33	-5	81	0.66
1	33	0	81	0.42
1	-33	0	81	0.42
1	33	5	81	1.10
1	-33	5	81	1.10
1	22	22	81	1.25
1	-22	22	81	1.25
1	0	22	81	1.07
			Average=	0.88

Table 13. Ratio of the assessed effective dose equivalent, H'_E , to the actual effective dose equivalent, H_E, for 1.0 MeV point photon sources defined by X and Y data plane at Z = 61 cm.

Energy	X	Y	Z	A3
(MeV)	(cm)	(cm)	(cm)	
1	0	-22	61	1.10
1	22	-22	61	1.07
1	-22	-22	61	1.07
1	33	-5	61	1.08
1	-33	-5	61	1.08
1	33	0	61	0.62
1	-33	0	61	0.62
1	33	5	61	1.34
1	-33	5	61	1.34
1	22	22	61	1.69
1	-22	22	61	1.69
1	0	22	61	1.95
			Average=	**1.22**

Table 14. Ratio of the assessed effective dose equivalent, H'_E , to the actual effective dose equivalent, H_E, for 1.0 MeV point photon sources defined by X and Y data plane at Z = 41 cm.

Energy	X	Y	Z	A3
(MeV)	(cm)	(cm)	(cm)	
1	0	-22	41	4.56
1	22	-22	41	1.53
1	-22	-22	41	1.53
1	33	-5	41	1.34
1	-33	-5	41	1.34
1	33	0	41	0.72
1	-33	0	41	0.72
1	33	5	41	1.40
1	-33	5	41	1.40
1	22	22	41	1.99
1	-22	22	41	1.99
1	0	22	41	5.88
			Average=	**2.03**
1	0	-44	41	1.80
1	44	-44	41	1.28
1	44	0	41	1.30
1	44	44	41	1.69
1	0	44	41	2.13

Table 15. Ratio of the assessed effective dose equivalent, H'_E , to the actual effective dose equivalent, H_E, for 1.0 MeV point photon sources defined by X and Y data plane at Z = 21 cm.

Energy	X	Y	Z	A3
(MeV)	(cm)	(cm)	(cm)	
1	0	-22	21	1.31
1	22	-22	21	1.19
1	-22	-22	21	1.19
1	33	-5	21	1.22
1	-33	-5	21	1.22
1	33	0	21	0.63
1	-33	0	21	0.63
1	33	5	21	1.31
1	-33	5	21	1.31
1	22	22	21	1.51
1	-22	22	21	1.51
1	0	22	21	1.71
			Average=	**1.23**

Table 16. Ratio of the assessed effective dose equivalent, H'_E , to the actual effective dose equivalent, H_E, for 1.0 MeV point photon sources defined by X and Y data plane at Z = 6 cm.

Energy	X	Y	Z	A3
(MeV)	(cm)	(cm)	(cm)	
1	0	-22	6	0.47
1	22	-22	6	0.72
1	-22	-22	6	0.72
1	33	-5	6	0.95
1	-33	-5	6	0.95
1	33	0	6	0.44
1	-33	0	6	0.44
1	33	5	6	1.09
1	-33	5	6	1.09
1	22	22	6	1.12
1	-22	22	6	1.12
1	0	22	6	0.90
			Average=	**0.84**
1	0	44	6	0.98
1	44	-44	6	1.08
1	44	0	6	1.03
1	44	44	6	1.41
1	0	44	6	1.36

Table 17. Ratio of the assessed effective dose equivalent, H'_E , to the actual effective dose equivalent, H_E, for 1.0 MeV point photon sources defined by X and Y data plane at Z = -21 cm.

Energy	X	Y	Z	A3
(MeV)	(cm)	(cm)	(cm)	
1	0	-22	-21	0.43
1	22	-22	-21	0.61
1	-22	-22	-21	0.61
1	33	-5	-21	0.97
1	-33	-5	-21	0.97
1	33	0	-21	0.26
1	-33	0	-21	0.26
1	33	5	-21	1.08
1	-33	5	-21	1.08
1	22	22	-21	1.05
1	-22	22	-21	1.05
1	0	22	-21	0.75
			Average=	0.76

Table 18. Ratio of the assessed effective dose equivalent, H'_E , to the actual effective dose equivalent, H_E, for 1.0 MeV point photon sources defined by X and Y data plane at Z = -41 cm.

Energy	X	Y	Z	A3
(MeV)	(cm)	(cm)	(cm)	
1	0	-22	-41	0.61
1	22	-22	-41	0.71
1	-22	-22	-41	0.71
1	33	-5	-41	1.14
1	-33	-5	-41	1.14
1	33	0	-41	0.21
1	-33	0	-41	0.21
1	33	5	-41	1.37
1	-33	5	-41	1.37
1	22	22	-41	1.23
1	-22	22	-41	1.23
1	0	22	-41	0.89
			Average=	0.90

Table 19. Ratio of the assessed effective dose equivalent, H'_E , to the actual effective dose equivalent, H_E, for 1.0 MeV point photon sources defined by X and Y data plane at Z = -61 cm.

Energy	X	Y	Z	A3
(MeV)	(cm)	(cm)	(cm)	
1	0	-22	-61	0.75
1	22	-22	-61	0.79
1	-22	-22	-61	0.79
1	33	-5	-61	1.03
1	-33	-5	-61	1.03
1	33	0	-61	0.18
1	-33	0	-61	0.18
1	33	5	-61	1.20
1	-33	5	-61	1.20
1	22	22	-61	1.51
1	-22	22	-61	1.51
1	0	22	-61	1.19
			Average=	**0.95**

Table 20. Ratio of the assessed effective dose equivalent, H'_E , to the actual effective dose equivalent, H_E, for 1.0 MeV point photon sources defined by X and Y data plane at Z = -81 cm.

Energy	X	Y	Z	A3
(MeV)	(cm)	(cm)	(cm)	
1	0	-22	-81	0.84
1	22	-22	-81	0.96
1	-22	-22	-81	0.96
1	33	-5	-81	0.98
1	-33	-5	-81	0.98
1	33	0	-81	0.22
1	-33	0	-81	0.22
1	33	5	-81	1.36
1	-33	5	-81	1.36
1	22	22	-81	2.09
1	-22	22	-81	2.09
1	0	22	-81	1.60
			Average=	**1.14**

Table 21. Ratio of the assessed effective dose equivalent, H'_E , to the actual effective dose equivalent, H_E, for 1.5 MeV point photon sources defined by X and Y data plane at Z = 105 cm.

Energy	X	Y	Z	A3
(MeV)	(cm)	(cm)	(cm)	
1.5	0	0	105	0.10
1.5	0	-10	105	0.69
1.5	0	10	105	0.85
1.5	0	-22	105	0.78
1.5	22	-22	105	0.93
1.5	-22	-22	105	0.93
1.5	33	-5	105	0.82
1.5	-33	-5	105	0.82
1.5	33	0	105	0.35
1.5	-33	0	105	0.35
1.5	33	5	105	0.99
1.5	-33	5	105	0.99
1.5	22	22	105	1.18
1.5	-22	22	105	1.18
1.5	0	22	105	1.05
			Average=	0.80

Table 22. Ratio of the assessed effective dose equivalent, H'_E , to the actual effective dose equivalent, H_E, for 1.5 MeV point photon sources defined by X and Y data plane at Z = 81 cm.

Energy	X	Y	Z	A3
(MeV)	(cm)	(cm)	(cm)	
1.5	0	-22	81	0.71
1.5	22	-22	81	0.90
1.5	-22	-22	81	0.90
1.5	33	-5	81	0.71
1.5	-33	-5	81	0.71
1.5	33	0	81	0.47
1.5	-33	0	81	0.47
1.5	33	5	81	1.05
1.5	-33	5	81	1.05
1.5	22	22	81	1.17
1.5	-22	22	81	1.17
1.5	0	22	81	1.00
			Average=	0.86

Table 23. Ratio of the assessed effective dose equivalent, H'_E , to the actual effective dose equivalent, H_E, for 1.5 MeV point photon sources defined by X and Y data plane at Z = 61 cm.

Energy	X	Y	Z	A3
(MeV)	(cm)	(cm)	(cm)	
1.5	0	-22	61	1.07
1.5	22	-22	61	1.04
1.5	-22	-22	61	1.04
1.5	33	-5	61	1.05
1.5	-33	-5	61	1.05
1.5	33	0	61	0.66
1.5	-33	0	61	0.66
1.5	33	5	61	1.27
1.5	-33	5	61	1.27
1.5	22	22	61	1.61
1.5	-22	22	61	1.61
1.5	0	22	61	1.87
			Average=	**1.18**

Table 24. Ratio of the assessed effective dose equivalent, H'_E , to the actual effective dose equivalent, H_E, for 1.5 MeV point photon sources defined by X and Y data plane at Z = 41 cm.

Energy	X	Y	Z	A3
(MeV)	(cm)	(cm)	(cm)	
1.5	0	-22	41	4.50
1.5	22	-22	41	1.49
1.5	-22	-22	41	1.49
1.5	33	-5	41	1.27
1.5	-33	-5	41	1.27
1.5	33	0	41	0.75
1.5	-33	0	41	0.75
1.5	33	5	41	1.32
1.5	-33	5	41	1.32
1.5	22	22	41	1.91
1.5	-22	22	41	1.91
1.5	0	22	41	5.74
			Average=	**1.98**

Table 25. Ratio of the assessed effective dose equivalent, H'_E , to the actual effective dose equivalent, H_E, for 1.5 MeV point photon sources defined by X and Y data plane at Z = 21 cm.

Energy	X	Y	Z	A3
(MeV)	(cm)	(cm)	(cm)	
1.5	0	-22	21	1.29
1.5	22	-22	21	1.15
1.5	-22	-22	21	1.15
1.5	33	-5	21	1.14
1.5	-33	-5	21	1.14
1.5	33	0	21	0.67
1.5	-33	0	21	0.67
1.5	33	5	21	1.23
1.5	-33	5	21	1.23
1.5	22	22	21	1.44
1.5	-22	22	21	1.44
1.5	0	22	21	1.64
			Average=	**1.18**

Table 26. Ratio of the assessed effective dose equivalent, H'_E , to the actual effective dose equivalent, H_E, for 1.5 MeV point photon sources defined by X and Y data plane at Z = 6 cm.

Energy	X	Y	Z	A3
(MeV)	(cm)	(cm)	(cm)	
1.5	0	-22	6	0.46
1.5	22	-22	6	0.70
1.5	-22	-22	6	0.70
1.5	33	-5	6	0.90
1.5	-33	-5	6	0.90
1.5	33	0	6	0.49
1.5	-33	0	6	0.49
1.5	33	5	6	1.02
1.5	-33	5	6	1.02
1.5	22	22	6	1.05
1.5	-22	22	6	1.05
1.5	0	22	6	0.85
			Average=	**0.80**

Table 27. Ratio of the assessed effective dose equivalent, H'_E , to the actual effective dose equivalent, H_E, for 1.5 MeV point photon sources defined by X and Y data plane at Z = -21 cm.

Energy	X	Y	Z	A3
(MeV)	(cm)	(cm)	(cm)	
1.5	0	-22	-21	0.42
1.5	22	-22	-21	0.59
1.5	-22	-22	-21	0.59
1.5	33	-5	-21	0.88
1.5	-33	-5	-21	0.88
1.5	33	0	-21	0.31
1.5	-33	0	-21	0.31
1.5	33	5	-21	0.98
1.5	-33	5	-21	0.98
1.5	22	22	-21	0.94
1.5	-22	22	-21	0.94
1.5	0	22	-21	0.70
			Average=	**0.71**

Table 28. Ratio of the assessed effective dose equivalent, H'_E , to the actual effective dose equivalent, H_E, for 1.5 MeV point photon sources defined by X and Y data plane at Z = -41 cm.

Energy	X	Y	Z	A3
(MeV)	(cm)	(cm)	(cm)	
1.5	0	-22	-41	0.59
1.5	22	-22	-41	0.68
1.5	-22	-22	-41	0.68
1.5	33	-5	-41	1.03
1.5	-33	-5	-41	1.03
1.5	33	0	-41	0.24
1.5	-33	0	-41	0.24
1.5	33	5	-41	1.22
1.5	-33	5	-41	1.22
1.5	22	22	-41	1.09
1.5	-22	22	-41	1.09
1.5	0	22	-41	0.81
			Average=	**0.83**

Table 29. Ratio of the assessed effective dose equivalent, H'_E , to the actual effective dose equivalent, H_E, for 1.5 MeV point photon sources defined by X and Y data plane at Z = -61 cm.

Energy	X	Y	Z	A3
(MeV)	(cm)	(cm)	(cm)	
1.5	0	-22	-61	0.72
1.5	22	-22	-61	0.74
1.5	-22	-22	-61	0.74
1.5	33	-5	-61	0.97
1.5	-33	-5	-61	0.97
1.5	33	0	-61	0.22
1.5	-33	0	-61	0.22
1.5	33	5	-61	1.12
1.5	-33	5	-61	1.12
1.5	22	22	-61	1.33
1.5	-22	22	-61	1.33
1.5	0	22	-61	1.05
			Average=	**0.88**

Table 30. Ratio of the assessed effective dose equivalent, H'_E , to the actual effective dose equivalent, H_E, for 1.5 MeV point photon sources defined by X and Y data plane at Z = -81 cm.

Energy	X	Y	Z	A3
(MeV)	(cm)	(cm)	(cm)	
1.5	0	-22	-81	0.79
1.5	22	-22	-81	0.89
1.5	-22	-22	-81	0.89
1.5	33	-5	-81	0.94
1.5	-33	-5	-81	0.94
1.5	33	0	-81	0.28
1.5	-33	0	-81	0.28
1.5	33	5	-81	1.29
1.5	-33	5	-81	1.29
1.5	22	22	-81	1.82
1.5	-22	22	-81	1.82
1.5	0	22	-81	1.39
			Average=	**1.05**