Duke Power®
A Duke Energy Company

GARY R. PETERSON
Vice President
McGuire Nuclear Station

Duke Power
MG01VP / 12700 Hagers Ferry Road
Huntersville, NC 28078-9340

704 875 5333
704 875 4809 fax
grpeters@duke-energy.com

January 12, 2005

U. S. Nuclear Regulatory Commission
Document Control Desk
Washington, D.C. 20555

Subject: McGuire Nuclear Station, Unit 1
Docket No. 50-369
NRC Request for Additional Information
End of Cycle 16 Steam Generator Inservice Inspection Summary Report

By letters dated April 29 and June 22, 2004, Duke Energy Corporation submitted, as required per regulation, results of the McGuire Nuclear Station, Unit 1 steam generator tube surveillance program and the McGuire, Unit 1 inservice inspection outage summary for the end of fuel cycle 16. By letter dated November 3, 2004, the NRC staff requested additional information on the subject submittals. Attached is the response to the subject request. This response is being submitted beyond the requested due date based upon a telecon with Mr. James J. Shea on November 15, 2004.

Questions regarding this submittal should be directed to Kay Crane, McGuire Regulatory Compliance at (704) 875-4306.

Gary R. Peterson

A047

cc: Mr. J. J. Shea (Mail Stop 07D11)
U. S. Nuclear Regulatory Commission
Office of Nuclear Reactor Regulation
Washington, D. C. 20555

Mr. W. D. Travers
Regional Administrator, Region II
U. S. Nuclear Regulatory Commission
Atlanta Federal Center, 23T85
61 Forsyth St., SW
Atlanta, GA 30303

Mr. Joe Brady
NRC Senior Resident Inspector
McGuire Nuclear Station

NRC Request for Additional Information
McGuire Unit 1 End of Cycle 16 Steam Generator Inservice Inspection Summary Report

1. Three volumetric indications near the tubesheet on the cold-leg side were identified in row 96, Column 33 of steam generator (SG) A. This tube was removed from service by plugging. This tube location appears to be in the periphery of the tube bundle (as inferred from a tubesheet map from Catawba Nuclear Station, Unit 1). Please discuss the suspected cause of these indications. If a foreign object is suspected to have caused these indications, was the foreign object positively identified? Was the suspected object removed? If visual inspections were not performed and/or the object was not removed, discuss what actions/analyses were performed to ensure that the potential object(s) do not compromise the integrity of this tube (tube severance and subsequent damage to neighboring tubes) and neighboring tubes for the period of time between inspections. Please discuss prior inspection results for this tube. In general, please discuss what actions were taken to identify loose parts in the SGs during the outage (e.g., foreign object search and retrieval, low frequency eddy current examination).

   McGuire Response:

   The suspected cause of the indications is foreign object wear. There were three indications in the tube with through wall depth's of 33%, 29%, and 54% as measured by rotating coil. The object was not identified with the bobbin and the rotating coil inspection. No previous indications or foreign objects were noted in previous inspections. A visual inspection of the periphery after sludge lancing did not identify an object in this area. However, this inspection did not specifically target this location. Sludge lancing in this generator was completed prior to the completion of the eddy current testing on the primary side. Further visual inspections could not be performed because the secondary side was in wet layup.

2. In order for the NRC staff to better understand the location of the indications described in your reports, please provide a sketch of a tubesheet map which depicts the rows and columns of the tubes in the McGuire Nuclear Station, Unit 1 SGs. In addition, please provide the radius and row numbers of the smallest radii tubes in he SGs as well as a description of which tubes, if any, received a stress relief after bending (e.g., stress relief of the entire tube length for the tubes in rows 1 through 27).

   Given that the replacement SGs for McGuire, Units 1 and 2, and Catawba, Unit 1 were manufactured at nearly the same time and by the same manufacturer, please indicate whether these SGs are essentially identical (e.g., identical tubesheet map, support structures, U-bend radii, stress relief of U-bend, number and naming of fan bars, etc.). If the SGs between the units have significant differences, please identify these differences.

McGuire Response:

McGuire Nuclear Station Unit's 1&2 and Catawba Nuclear Station Unit 1 utilize an essentially identical Recirculating Steam Generator (RSG) design for primary to secondary heat transfer. The RSGs were manufactured by Babcock and Wilcox Canada (Model CFR80). The tubing material is Thermally Treated Inconel Alloy 690 (I-690) with an outside diameter of 0.6875 inches and a nominal wall thickness of 0.040 inches. The tubes are hydraulically expanded full length into the tubesheet. There are 9 lattice grid tube supports that are typically 41" apart with the bottom two supports 22" and 35" apart vertically along the RSG. Fan bars support the U-bends. Rows 1 through 21 were full length stress relieved. The tightest radius bend is the row 3 tubes with a 3.632" radius.

Attachment 1 is a sketch of the Unit 1 steam generators which depicts the tube support naming conventions and attachment 2 is a tubesheet map which depicts the rows and columns of the tubes.

3. In your report you indicated that tube-to-tube contact is an area of concern for the replacement SGs. Please discuss how many tubes are currently considered to be in close proximity and whether any tube wear has been observed at the location of "close proximity." In addition, please discuss whether the number of tubes affected by tube-to-tube contact has increased, decreased, or remained the same since the SGs were installed. If the number of tubes in close proximity is increasing with time, please discuss the cause (the NRC staff understands that the tube proximity issue is a result of manufacture and that it was expected that the "condition" may correct itself with time).

McGuire Response:

The Connector Bars (CB) are constructed of 410 Stainless Steel. The U-bend Fan Bars (FB) are constructed of 410 Stainless Steel. The width of the bars is 1.25 inches. The J tabs are 316 Stainless Steel. Each fanbar assembly is offset along the length of the tube, meaning that the fanbar touches one side of the tube, but touches at a different axial location on the other side of the tube. As shown in Attachment 3 the fanbar assembly is free floating and therefore rest on the tubes for support. During the installation of the fanbar assembly it was observed that the J tabs that actually rest on the most outboard tube could be pushed in too far, causing two tubes in the same column to be closer than their ideal design spacing. The tubes are therefore in "proximity". The outermost tubes touching the J tabs are therefore fixed by the J tab position and support the fanbar assembly. The tubes immediately under the outermost tube in the same column are free to move with only the friction of the fanbars and collector bars holding them in place.

Since the conditions may change from inspection to inspection due to the free floating fanbar assembly the current strategy is to monitor the tubing for wear and not track the tubes in proximity. No wear degradation was observed.

4. Please discuss the specific criteria used to select special interest locations in which tubes are inspected using the rotating probe. Additionally, please explain why certain absolute drift indications were examined with a rotating probe while others were not.

McGuire Response:

All new bobbin indications are inspected with a rotating probe. Past indications are not inspected with a rotating probe if the bobbin indication has not changed since the baseline inspection. In the report submitted, only indications are reported. The absolute drift indications in question were inspected with the rotating probe. The report submitted is for identified indications. Therefore, a rotating probe call of no defect found (NDF) and bobbin calls of no defect detected (NDD) are not included in the report.

5. Your report identifies the population of tubes that are experiencing wear at fan bar locations. Please discuss whether the extent to which these wear indications are considered "typical fan bar wear," "atypical U-bend wear," or "localized U-bend wear." Typical fan bar wear refers to wear caused by the thermal hydraulic conditions and tube-to-support clearances which can vary because of manufacturing tolerances. Atypical U-bend wear refers to pit-like indications found at flat-bar supports and theorized to be the result of asperities on the flat bars introduced during fabrication. Localized U-bend wear refers to wear "localized" to specific columns of tubes and possible the adjacent column as a result of arch-bar distortion instead of a more random manufacturing tolerance issue (which causes typical fan bar wear).

McGuire Response:

The wear indications are considered typical wear indications.

6. Each SG inspected contained tubes with dent indications. Please clarify your reporting threshold for dents and discuss whether the calibration procedure (for measuring the size of dents) is consistent with that described in industry guidelines. Also discuss whether any of the dents are service induced or have increased in size as a result of service conditions (i.e., are any of the dents not present in the baseline inspection and/or have any of them exhibited significant change since the baseline inspection). Discuss the reason for any changes.

McGuire Response:

The reporting threshold for dents is 2 volts and consistent with industry guidelines. The dents are not considered to be service induced and are a result of the manufacturing process. No significant changes in the dent voltage has been noted.

7. Please discuss whether the rotating probe examinations performed at the top of the tubesheet region included the tubes that were not fully expanded or were overexpanded.

McGuire Response:

The anomalies (overexpansion and/or under expansion) were identified for all tubes during the preservice inspection. Each of these anomalies were examined by rotating coil technology during the first two inservice inspections. Any locations examined during EOC16 would have been random as part of the tubesheet sample plan.

8. A review of your past reports indicates that a total of 13 tubes (2 tubes in SG A, 2 tubes in SG B, 5 tubes in SG C, and 4 tubes in SG D) have been removed from service by plugging in the replacement SGs at McGuire, Unit 1. Please discuss the cause of plugging for each tube removed from service.

McGuire Response:

In the SG A, one tube was plugged preservice and the second was plugged due to foreign object wear. In the SG B, one tube was plugged preservice and the second was plugged due to atypical wear. In SG C, one tube was plugged due to atypical wear and all other tubes were plugged preservice. In SG D, all tubes were plugged preservice.

Attachment 1
CFR 80 Steam Generators

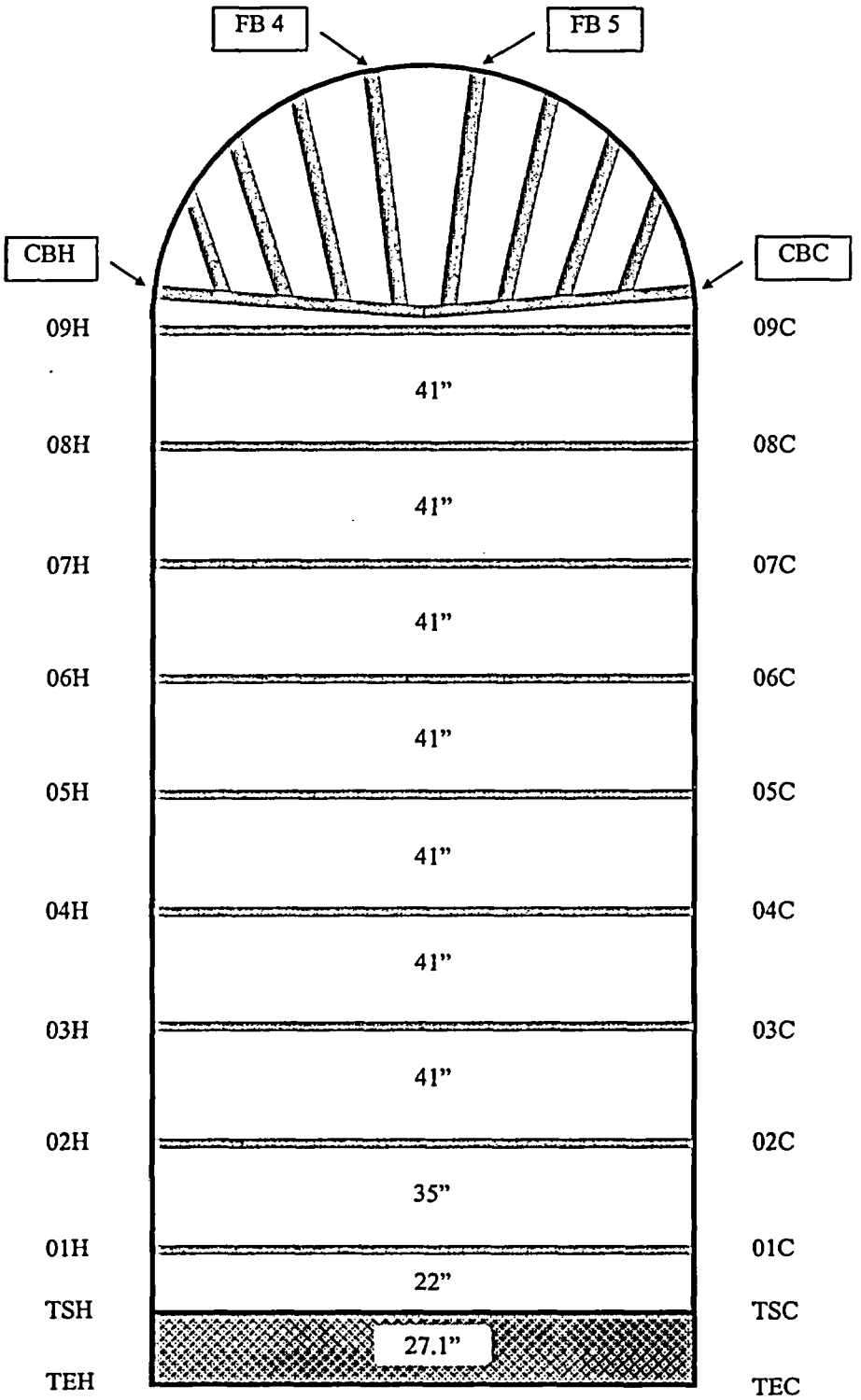

CFR 80

Tube Information:

No. of Tubes	6633
Material:	Inconel 690
Nominal Dia.:	0.688"
Nominal Wall:	0.040"
Row 1 Radius:	3.973"
Straight Length:	31.9'/32.7'
Tube Pitch:	.930"

Roll Plug Information:

Material:	Inconel 690
Nominal Dia.:	0.594"
Nominal Wall:	0.052"

Tube Support Information

Type:	Lattice
Material	410 Stainless
Thickness:	
High:	3.150"
Med.:	2.562"
Low:	1.000"

Connector Bar

Material:	410 Stainless

Fan Bars

Material:	410 Stainless
Thickness	0.110"
Width	1.25"

NOTE: Dimensions are to the centerline of the tube support structures.

Attachment 2

McGuire Nuclear Station
Unit 1

S/G A
HOT
PRIMARY FACE

TOTAL TUBES: 6633
SELECTED TUBES: 0
OUT OF SERVICE (#): NA

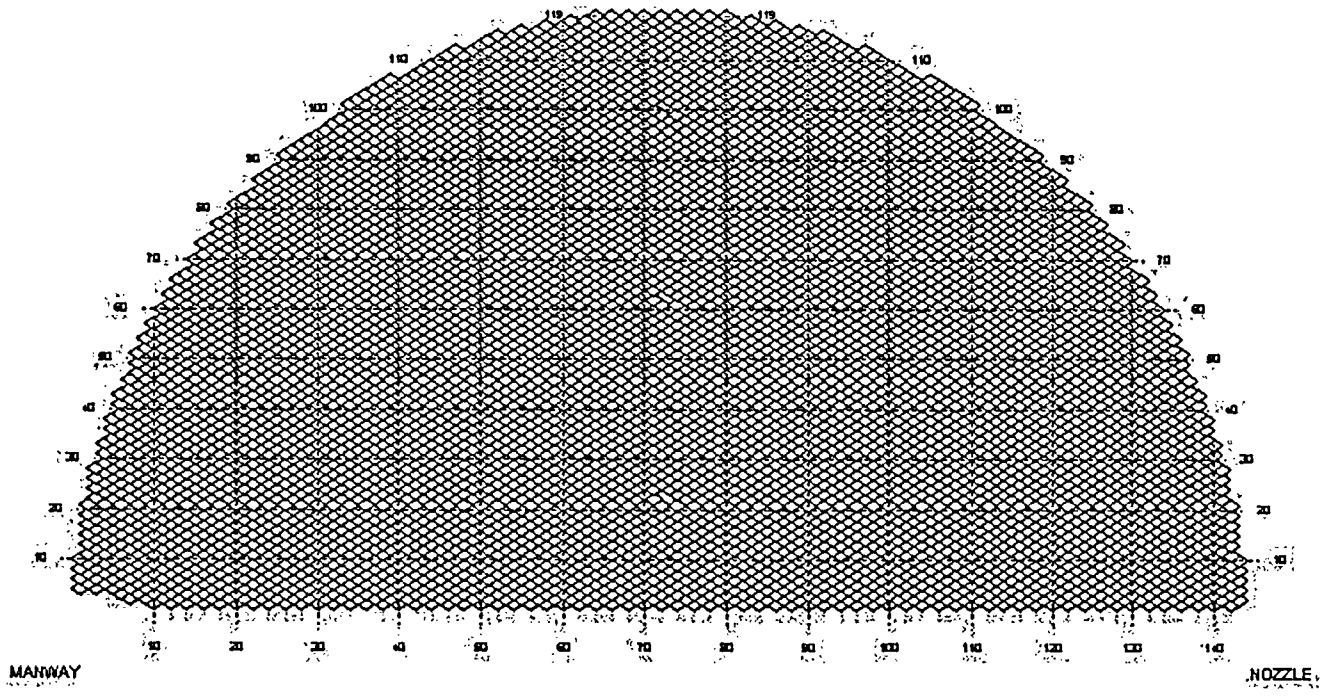
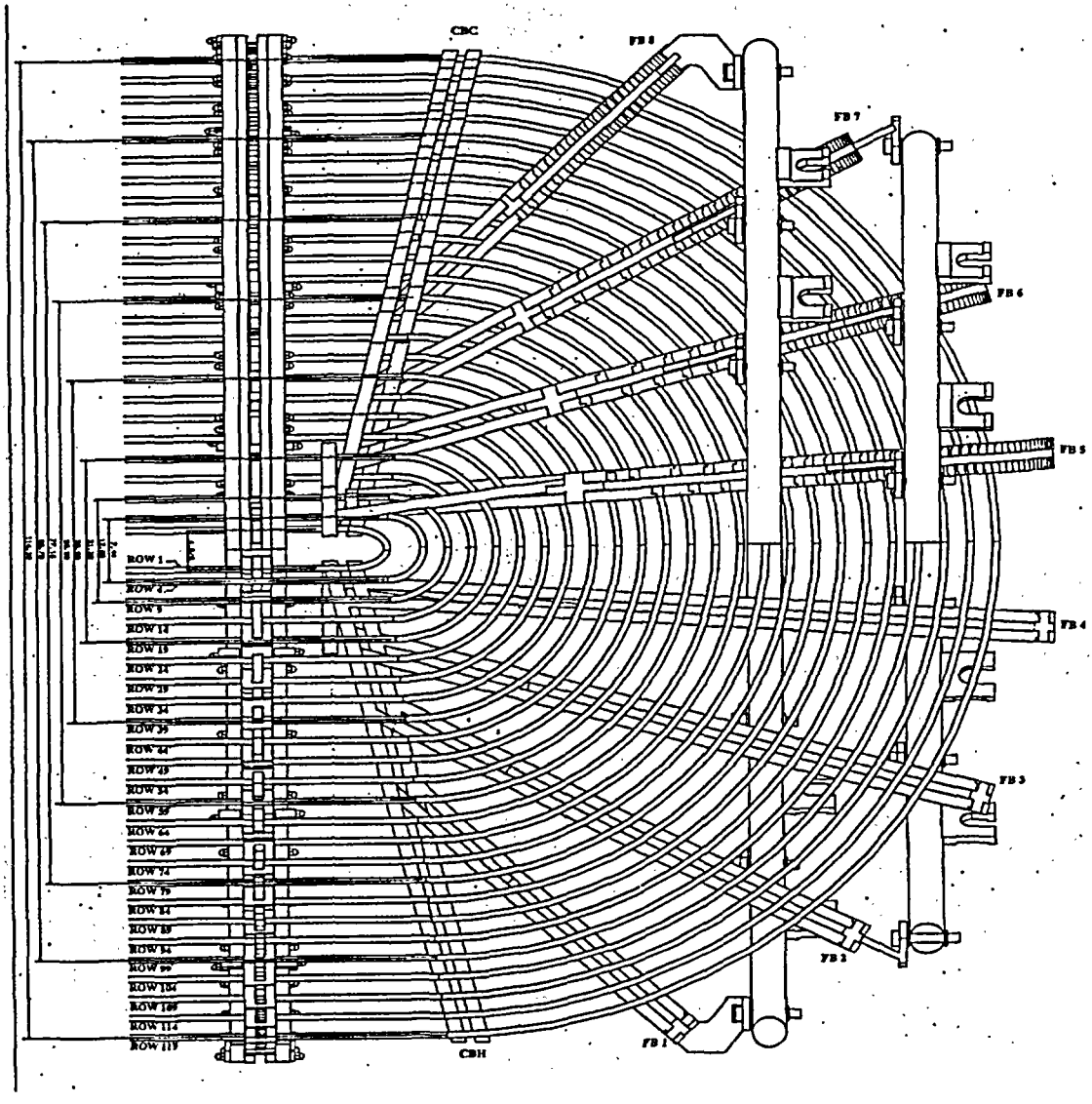
Attachment 3
CFR80 Fan Bar And Connector Bar Layout