NUREG/BR-0184

United States
Nuclear Regulatory Commission

Regulatory Analysis Technical Evaluation Handbook

Final Report

Office of Nuclear Regulatory Research

January 1997

NUREG/BR-0184

United States
Nuclear Regulatory Commission

Regulatory Analysis Technical Evaluation Handbook

Final Report

Office of Nuclear Regulatory Research

January 1997

Abstract

The purpose of this Handbook is to provide guidance to the regulatory analyst to promote preparation of quality regulatory analysis documents and to implement the policies of the *Regulatory Analysis Guidelines of the U.S. Nuclear Regulatory Commission* (NUREG/BR–0058 Rev. 2). This Handbook expands upon policy concepts included in the NRC Guidelines and translates the six steps in preparing regulatory analyses into implementable methodologies for the analyst. It provides standardized methods of preparation and presentation of regulatory analyses, with the inclusion of input that will satisfy all backfit requirements and requirements of NRC's Committee to Review Generic Requirements. Information on the objectives of the safety goal evaluation processs and potential data sources for preparing a safety goal evaluation is also included. Consistent application of the methods provided here will result in more directly comparable analyses, thus aiding decision–makers in evaluating and comparing various regulatory actions.

The handbook is being issued in loose–leaf format to facilitate revisions. NRC intends to periodically revise the handbook as new and improved guidance, data, and methods become available.

Contents

Abstract iii

Foreword xv

Acknowledgments xvii

Abbreviations and Acronyms xix

1 Introduction 1.1

1.1 Purpose 1.2
1.2 Regulatory Analysis Overview 1.2

1.2.1 Key Terms and Concepts 1.2
1.2.2 Steps in a Regulatory Analysis 1.3

1.3 Handbook Overview 1.4
1.4 Endnotes for Chapter 1 . . . . . 1.5

2 Scope of a Regulatory Analysis 2.1

2.1 When a Regulatory Analysis is Required 2.1
2.2 When a Backfit Regulatory Analysis is Required 2.1
2.3 When a CRGR Regulatory Analysis is Required 2.4
2.4 Level of Detail 2.6
2.5 Units 2.7
2.6 Regulatory Relaxations 2.7
2.7 Endnotes for Chapter 2 . . . . . 2.9

3 Safety Goal Evaluation for Operation of Nuclear Power Plants 3.1

3.1 Endnotes for Chapter 3 . . . . . 3.2

4 Regulatory Analysis Methods and Supporting Information 4.1

4.1 Statement of the Problem and Objective 4.1
4.2 Identification and Preliminary Analysis of Alternative Approaches 4.3
4.3 Estimation and Evaluation of Values and Impacts 4.5
4.4 Presentation of Results 4.8
4.5 Decision Rationale 4.9
4.6 Implementation 4.10
4.7 Endnotes for Chapter 4 . . . . . 4.11

5 Value-Impact Analysis 5.1

5.1 Background 5.1
5.2 Methods 5.1
5.3 Standard Analysis 5.2
5.4 Treatment of Uncertainty 5.3

5.4.1 Types of Uncertainty 5.3
5.4.2 Uncertainty Versus Sensitivity Analysis 5.4
5.4.3 Uncertainty/Sensitivity Analyses 5.5

5.4.3.1 NUREG-1150 . . . . . 5.5
5.4.3.2 NUREG/CR-5381 . . . . . 5.6
5.4.3.3 NUREG/CR-4832 . . . . . 5.7

5.4.4 Suggested Approach 5.7

5.5 Identification of Attributes 5.8

5.5.1 Public Health (Accident) 5.10
5.5.2 Public Health (Routine) 5.10
5.5.3 Occupational Health (Accident) 5.10
5.5.4 Occupational Health (Routine) 5.10
5.5.5 Offsite Property 5.11
5.5.6 Onsite Property 5.11
5.5.7 Industry Implementation 5.11
5.5.8 Industry Operation 5.11
5.5.9 NRC Implementation 5.11
5.5.10 NRC Operation 5.12
5.5.11 Other Government 5.12
5.5.12 General Public 5.12
5.5.13 Improvements in Knowledge 5.12
5.5.14 Regulatory Efficiency 5.13
5.5.15 Antitrust Considerations 5.13
5.5.16 Safeguards and Security Considerations 5.13
5.5.17 Environmental Considerations 5.13
5.5.18 Other Considerations 5.14

5.6 Quantification of Change in Accident Frequency 5.14

5.6.1 Identification of Affected Parameters 5.15
5.6.2 Estimation of Affected Parameter Values 5.18
5.6.3 Change in Accident Frequency 5.19

5.7 Quantification of Attributes 5.20

5.7.1 Public Health (Accident) 5.22

5.7.1.1 Estimation of Accident-Related Health Effects 5.22
5.7.1.2 Monetary Valuation of Accident-Related Health Effects 5.26
5.7.1.3 Discounting Monetized Value of Accident-Related Health Effects 5.26

5.7.2 Public Health (Routine) 5.27

5.7.2.1 Estimation of Change in Routine Exposure 5.28
5.7.2.2 Monetary Valuation of Routine Exposure 5.28

5.7.3 Occupational Health (Accident) 5.29

5.7.3.1 Estimation of Accident-Related Exposures 5.30
5.7.3.2 Monetary Valuation of Accident-Related Exposures 5.32
5.7.3.3 Discounting Monetized Values of Accident-Related Exposures 5.32

5.7.4 Occupational Health (Routine) 5.34

5.7.4.1 Estimation of Change in Routine Exposure 5.35
5.7.4.2 Monetary Valuation of Routine Exposure 5.37
5.7.4.3 Nonradiological Occupational Impacts 5.37

5.7.5 Offsite Property 5.37
5.7.6 Onsite Property 5.40

5.7.6.1 Cleanup and Decontamination 5.41
5.7.6.2 Long-Term Replacement Power 5.43
5.7.6.3 Repair and Refurbishment 5.45
5.7.6.4 Total Onsite Property Damage Costs 5.45

5.7.7 Industry Implementation 5.49

5.7.7.1 Short-Term Replacement Power 5.51
5.7.7.2 Premature Facility Closing 5.52

5.7.8 Industry Operation 5.52
5.7.9 NRC Implementation 5.54
5.7.10 NRC Operation 5.55
5.7.11 Other Government 5.56
5.7.12 General Public 5.58
5.7.13 Improvements in Knowledge 5.58
5.7.14 Regulatory Efficiency 5.59
5.7.15 Antitrust Considerations 5.60
5.7.16 Safeguards and Security Considerations 5.61
5.7.17 Environmental Considerations 5.61
5.7.18 Other Considerations 5.61

5.8 Summarization of Value-Impact Results 5.62
5.9 Endnotes for Chapter 5 . . . . . 5.63

6 References 6.1

Appendix A - Regulatory Analysis Issues A.1

A.1 Human Factors Issues A.1

A.1.1 Results Documents A.2
A.1.2 Methods Documents A.4

A.2 Cumulative Accounting of Past and Ongoing Safety Improvements A.5
A.3 Use of Industry Risk and Cost Estimates A.6

Appendix B - Supplemental Information for Value-Impact Analyses B.1

B.1 Numbers of Operating Power Reactors and Their Remaining Lifetimes B.1
B.2 Economic Discounting and Calculation of Present Value B.2

B.2.1 Discount Rate B.2
B.2.2 Discrete Discounting B.2
B.2.3 Continuous Discounting B.5

B.3 Occupational Exposure Experience B.6
B.4 Calculational Method for Handbook Table 5.3, "Expected Population Doses for Power Reactor Release Categories" B.17

B.4.1 Introduction B.17
B.4.2 MACCS Input Parameter Assumptions B.24

Appendix C - Supplemental Information for Non-Reactor Regulatory Analyses C.1

C.1 Facility Classes C.2

C.1.1 Fuel Cycle Facilities C.2
C.1.2 Non-Fuel Cycle Facilities C.3

C.2 Quantification of Attributes C.3

C.2.1 Public Health (Accident) C.4

C.2.1.1 Accident Frequencies C.4
C.2.1.2 Population Doses from Accidents C.10
C.2.1.3 Total Accident Risks C.15

C.2.2 Public Health (Routine) C.16
C.2.3 Occupational Health (Accident) C.17
C.2.4 Occupational Health (Routine) C.17

C.2.5 Offsite and Onsite Property C.19

C.2.5.1 Fuel Cycle Facilities C.19
C.2.5.2 Non-Fuel Cycle Facilities C.19

C.3 A Preliminary Evaluation of the Economic Risk for Cleanup of Nuclear Material Licensee Contamination Incidents C.20
C.4 Economic Risk of Contamination Cleanup Costs Resulting from Large Non-Reactor Nuclear Material Licensee Operations C.21
C.5 Preliminary Characterization of Risks in the Nuclear Waste Management System Based on Information in the Literature C.22
C.6 Preliminary Ranking of Nuclear Fuel Cycle Facilities on the Basis of Radiological Risks from Accidents C.24
C.7 Cost-Benefit Analysis of Unfired PuO_2 Pellets as an Alternative Plutonium Shipping Form C.26
C.8 A Regulatory Analysis on Emergency Preparedness for Fuel Cycle and Other Radioactive Material Licensees C.26
C.9 Regulatory Impact Analysis of Final Environmental Standards for Uranium Mill Tailings at Active Sites C.29
C.10 Value-Impact Analysis of Accident Preventive and Mitigative Options for Spent Fuel Pools C.31
C.11 Nuclear Fuel Cycle Facility Accident Analysis Handbook (NUREG-1320) C.33
C.12 Endnotes for Appendix C C.34

Appendix D - Safety Goal Policy Statement and Backfit Rule D.1

D.1 Safety Goals for the Operations of Nuclear Power Plants D.1
D.2 Backfit Rule D.11

Appendix E - Index E.1

Figures

2.1 Decision tree to determine level of effort 2.8

4.1 Standard format and content of regulatory analyses 4.2
4.2 Steps in a value-impact analysis 4.6

5.1 Summary of value-impact results 5.62

C.1 Uranium process flow among fuel cycle facilities C.36
C.2 Cleanup cost as a function of licensed radionuclide quantity for non-reactor nuclear material licensees C.37
C.3 Normalized peak individual doses for reviewed studies of geologic waste disposal postclosure period C.37
C.4 Incremental cost of alternative control methods for uranium mill tailings C.38

Tables

2.1 Applications of backfit and CRGR regulatory analyses 2.2
2.2 Checklist for specific backfit regulatory analysis requirements 2.3
2.3 Checklist for specific CRGR regulatory analysis requirements 2.5

4.1 List of potential alternative actions 4.3

5.1 Checklist for identification of affected attributes 5.9
5.2 Nuclear power plants risk assessments 5.16
5.3 Expected population doses for power reactor release categories 5.23
5.4 Weighted population dose factors for the five NUREG-1150 power reactors 5.25
5.5 Estimated occupational radiation dose from cleanup and decommissioning after a power reactor accident (person-rem or person cSv) 5.31
5.6 Weighted costs for offsite property damage for the five NUREG-1150 power reactors 5.38
5.7 Onsite property damage cost estimates (U) for future years (1993 dollars discounted to year of implementation) 5.47

B.1 Numbers and lifetimes of operating nuclear power plants B.1
B.2 Present value of a future dollar B.4
B.3 Present value of annuity of a dollar, received at end of each year B.4
B.4 Occupational dose rates by EEDB classification for PWR systems and components B.7
B.5 Occupational dose rates by EEDB classification for BWR systems and components B.12
B.6 1991-1993 annual occupational exposure information for industrial radiographers B.18
B.7 1991-1993 annual occupational exposure information for byproduct manufacturers and distributors B.18
B.8 1991-1993 annual occupational exposure information for fuel fabricators B.19
B.9 Annual occupational doses for low level waste disposal and spent fuel storage facilities, 1991-1993 . . . . . B.19
B.10 Summary of 1973-1993 annual occupational exposure information reported by commercial BWRs B.20
B.11 Summary of 1973-1993 annual occupational exposure information reported by commercial PWRs B.21
B.12 Summary of 1973-1993 annual occupational exposure information reported by commercial LWRs B.22
B.13 1993 numbers of employees and collective and average doses by occupation and personnel type at LWRs B.23

C.S.1 Summary description of representative uranium fuel cycle facilities C.39
C.1 Frequency of contamination incidents for non-reactor nuclear material licensees C.41
C.2 Incident cleanup cost by material quantity class for non-reactor nuclear material licensees C.41
C.3 Economic risk as a function of material application/use and licensed curie quantity for non-reactor nuclear material licensees C.42
C.4 Summary of economic risk at a reference uranium mill C.43
C.5 Summary of economic risk at a reference uranium hexafluoride conversion plant C.44
C.6 Summary of economic risk at a reference uranium fuel fabrication facility C.45
C.7 Summary of economic risk at a reference byproduct material manufacture/distribution facility C.46
C.8 Summary of economic risk at a reference waste warehouse C.47
C.9 Estimated 70-year population and worker exposures for repository construction C.47
C.10 Radiation exposure from normal construction and operation for repository preclosure period C.48

C.11 Total radiological worker fatalities from construction and emplacement periods of three alternative Repository Sites C.48
C.12 Occupational dose during normal operation and from a shaft drop accident for repository preclosure period C.48
C.13 Public dose during normal operation and from a shaft drop accident for repository preclosure period C.49
C.14 Summary of repository accident releases, frequencies, consequences, and risk values for repository preclosure period, operations phase C.50
C.15 Radiation exposure from accidents for repository preclosure period, operations phase C.50
C.16 Occupational dose during repository operation C.51
C.17 Summary of annual occupational exposures for spent fuel and HLW operation at a tuff repository C.51
C.18 Estimated 50-year whole-body dose commitment to the public, maximally exposed individual, and workers from accidents for repository preclosure period, operations phase C.52
C.19 Preliminary risk estimates for postulated accidents at a repository in tuff for operations phase C.53
C.20 Frequencies and consequences of accident scenarios projected to result in offsite doses greater than 0.05 rem for repository preclosure period, operations phase C.54
C.21 Occupational dose during normal operation and from accidents during decommissioning and retrieval phases of a repository C.55
C.22 Comparison of normalized public accident risk values from various studies for repository preclosure period C.55
C.23 1985 Revised EPA estimates of 10,000-year health effects for 100,000-MTHM repositories in basalt, bedded salt, tuff, and granite C.56
C.24 70-year cumulative maximally exposed individual and regional population doses for the two peak dose periods for a tuff repository C.56
C.25 Peak conditional cancer risks due to ingestion for the 100,000-year postclosure period for a 90,000-MTU spent fuel repository in bedded salt C.57
C.26 Radiation exposures from routine operations at the MRS facility C.57
C.27 Radiological impacts of potential MRS facility accidents for sealed storage cask at the Clinch River Site for operations phase C.58
C.28 Occupational dose from MRS facility operations C.58
C.29 Summary of occupational doses from MRS facility operations C.58
C.30 Occupational dose estimates for selected MRS operations C.59
C.31 Summary of MRS drywell risk analysis for operations phase C.59
C.32 Summary of results of MRS operations phase C.60
C.33 Projected maximum individual exposures from normal spent fuel transport by truck cask C.61
C.34 Projected maximum individual exposures from normal spent fuel transport by rail cask C.62
C.35 Summary of results from the NRC for spent fuel shipments C.62
C.36 Maximum individual radiation dose estimates for rail cask accidents during spent fuel transportation C.63
C.37 50-year population dose estimates for spent fuel rail cask accidents with no cleanup of deposited nuclides C.63
C.38 Population radiation exposure from water ingestion for severe but credible spent fuel rail cask accidents C.64
C.39 Summary of spent fuel truck and rail transportation risks C.64
C.40 Summary of the routine transportation risks for the waste management system without an MRS facility C.65
C.41 Summary of the routine transportation risks for the waste management system with an MRS facility C.66

C.42 Aggregated public risks for the preclosure phases of the waste management system without an MRS Facility C.67
C.43 Aggregated occupational risks for the preclosure phases of the waste management system without an MRS facility C.68
C.44 Aggregated public risks for the preclosure phases of the waste management system with an MRS facility C.69
C.45 Aggregated occupational risks for the preclosure phases of the waste management system with an MRS facility C.70
C.46 Total preclosure life-cycle risk estimates for the waste management system C.70
C.47 Summary of annual and total life-cycle risk estimates for the waste management system C.71
C.48 Accident frequencies and population doses for milling in the nuclear fuel cycle C.72
C.49 Accident frequencies and population doses for conversion in the nuclear fuel cycle C.72
C.50 Accident frequencies and population doses for enrichment in the nuclear fuel cycle C.72
C.51 Accident frequencies and population doses for fuel fabrication in the nuclear fuel cycle C.73
C.52 MOX fuel refabrication radiological accident risk C.73
C.53 Accident frequencies and population doses for MOX fuel refabrication in the nuclear fuel cycle C.74
C.54 Accident frequencies and population doses for MOX fuel refabrication in the nuclear fuel cycle C.74
C.55 Accident frequencies and population doses for MOX fuel refabrication in the nuclear fuel cycle C.75
C.56 Fuel reprocessing radiological accident risk C.75
C.57 Accident frequencies and population doses for reprocessing in the nuclear fuel cycle C.76
C.58 Accident frequencies and population doses for reprocessing in the nuclear fuel cycle C.77
C.59 Accident frequencies and population doses for reprocessing in the nuclear fuel cycle C.78
C.60 Accident frequencies and population doses for reprocessing in the nuclear fuel cycle C.78
C.61 Accident frequencies and population doses for spent fuel storage in the nuclear fuel cycle C.79
C.62 Accident frequencies and population doses for solidified HLW storage in the nuclear fuel cycle C.79
C.63 Preclosure geologic waste disposal radiological accident risk C.79
C.64 Transportation radiological accident risk C.80
C.65 Accident frequencies and population doses for transportation of spent fuel by rail and PuO_2 by truck in the nuclear fuel cycle C.80
C.66 Accident frequencies and population doses for transportation in the nuclear fuel cycle C.81
C.67 Accident frequencies and population doses for rail transportation in the nuclear fuel cycle C.82
C.68 Accident frequencies and population doses for rail transportation in the nuclear fuel cycle C.82
C.69 Accident frequencies and population doses for rail transportation in the nuclear fuel cycle C.82
C.70 Normalized risk results for nuclear fuel cycle C.83
C.71 Capital equipment costs for fuel pellet fabrication C.84
C.72 Capital equipment costs for powder reconstitution during fuel fabrication C.85
C.73 Start-up operation costs for fuel fabrication C.86
C.74 Process operation costs for fuel fabrication C.86
C.75 Summary of dose equivalent estimates for fabricating PuO_2 powder to unfired pellets during fuel Fabrication C.87
C.76 Summary of dose equivalent estimates for reconstituting unfired PuO_2 pellets back to powder during fuel fabrication C.87
C.77 Accident source terms and doses from uranium mill accidents C.88
C.78 Offsite doses calculated for fuel fabrication plants C.88
C.79 Dose commitments from plutonium fuel fabrication facility accidents C.89
C.80 Maximum offsite individual dose commitments (Rem) from spent fuel reprocessing facility accidents C.89
C.81 Calculated releases and doses from spent fuel storage accidents C.89

C.82 Maximum possession limits, release fractions, and doses due to a major facility fire for radiopharmaceutical manufacturing C.90
C.83 Maximum possession limits, release fractions, and doses due to a major facility fire for a radiopharmacy C.91
C.84 Maximum possession limits, release fractions, and doses due to a major facility fire for sealed source manufacturing C.92
C.85 Maximum possession limits, release fractions, and doses due to a major facility fire for university research laboratories C.93
C.86 Waste warehousing airborne releases and doses due to a major facility fire C.93
C.87 Alternative disposal standards for uranium mill tailings C.93
C.88 Alternative standards and control methods for existing uranium mill tailings piles C.94
C.89 Alternative standards and control methods for new uranium mill tailings piles C.94
C.90 Summary of values for alternative disposal standards for uranium mill tailings C.95
C.91 Cost-effectiveness of control methods for uranium mill tailings C.96
C.92 Summary of costs in millions of 1983 dollars for alternative disposal standards for uranium mill tailings C.97
C.93 Estimated risks from spent fuel pool fires C.97
C.94 Offsite consequence calculations for spent fuel pool fires C.98
C.95 Onsite property damage costs in dollars per spent fuel pool accident C.98
C.96 Incremental storage costs in 1983 dollars associated with limited low-density racking in the primary spent fuel pool C.99
C.97 Summary of Parameters affecting attributes for the spent fuel pool inventory reduction option C.100
C.98 Summary of industry-wide value-impact analysis of the spent fuel pool inventory reduction option C.101
C.99 Failure frequency for generic spent fuel pool cooling and makeup systems C.102
C.100 Value-impact for generic improvements to the spent fuel pool cooling system C.103
C.101 Offsite property damage and health costs per spent fuel pool accident C.103
C.102 Summary of industry-wide value-impact analysis of the spent fuel pool post-accident spray system C.104
C.103 Facility descriptors for accident analysis C.105
C.104 Fuel manufacturing process descriptors C.106
C.105 Fuel reprocessing process descriptors C.107
C.106 Waste storage/solidification process descriptors C.108
C.107 Spent fuel storage process descriptors C.109
C.108 Behavior mechanisms for airborne particles C.110
C.109 Unscaled and scaled total accident risks to the public for non-reactor fuel cycle facilities C.111
C.110 Preliminary occupational risk estimates for postulated accidents at a repository in tuff for preclosure operations phase of geologic waste disposal C.113

Foreword

This document is a Handbook to be used by the NRC and its contractors in the preparation of regulatory analyses to aid NRC decision-makers in deciding whether a proposed new regulatory requirement should be imposed. In addition, it is anticipated that the Handbook will be useful to the Agreement States in their assessment of new regulatory requirements. The Handbook is an updated and revised version of an earlier document, *A Handbook for Value-Impact Assessment* (NUREG/CR-3568), issued by the NRC in 1983.

The 1983 document is being updated in this Handbook to accomplish the following objectives:

- To reflect the content of NRC's Regulatory Analysis Guidelines, NUREG/BR-0058 Rev. 2, issued in November 1995.
- To expand the scope of the Handbook to include the entire regulatory analysis process and to address facilities other than power reactors.
- To reflect NRC experience and improvements in data and methodology since the 1983 Handbook was issued.
- To reflect the guidance in the 1996 document, *Economic Analysis of Federal Regulations Under Executive Order 12866*. This document was prepared by a Federal interagency regulatory working group convened by the Office of Management and Budget.

NRC obtained review comments on the draft Handbook from the following organizations: Westinghouse Savannah River Co., Brookhaven National Laboratory, Argonne National Laboratory, and Science and Engineering Associates, Inc. The comments of these organizations are reflected in the Handbook. The draft version of the Handbook has also been used by NRC staff members since 1993 and staff comments have been incorporated. A draft version of the Handbook was made available to the public in September 1993 (58 FR 47160), but comments were not specifically requested.

The Handbook is being issued in loose-leaf format to facilitate future revisions. NRC intends to periodically revise the Handbook as new and improved guidance, data, and methods become available. Comments on the Handbook from users and the public are welcome at any time. Comments should be submitted to: Chief, Rules Review and Directives Branch, Division of Freedom of Information and Publication Services, Mail Stop T-6 D59, U.S. Nuclear Regulatory Commission, Washington DC 20555-0001.

Thomas O. Martin, Chief
Regulation Development Branch
Division of Regulatory Applications
Office of Nuclear Regulatory Research

Acknowledgments

Pacific Northwest National Laboratory (PNNL) provided technical and editorial support in preparation of this Handbook. The principal PNNL technical contributors were R. H. Gallucci and P. L. Hendrickson. G. J. Konzek and P. J. Pelto of PNNL also contributed to the document. Helpful comments on an early draft of this Handbook were provided by W. S. Durant of Westinghouse Savannah River Co.; V. Mubayi of Brookhaven National Laboratory; P. H. Kier, C. Mueller, S. Folga, J. Roglans-Ribas, F. Monetde, and J. C. VanKuiken of Argonne National Laboratory; F. Sciacca of Science and Engineering Associates, Inc; and a number of internal NRC reviewers.

Abbreviations and Acronyms

AC	alternating current
AE	architect engineer
AEC	U.S. Atomic Energy Commission
AEOD	NRC Office for Analysis and Evaluation of Operational Data
ANL	Argonne National Laboratory
ATWS	anticipated transient without scram
B&W	Babcock & Wilcox
BEIR	biological effects of ionizing radiation
BLS	Bureau of Labor Statistics
BLSV	bulk liquids and scintillation vials
BNL	Brookhaven National Laboratory
BWR	Boiling Water Reactor
CAP	Clean Air Act Assessment Package
CDF	core damage frequency
CE	Combustion Engineering
CFR	Code of Federal Regulations
CPCFB	conditional probability of containment failure or bypass
CRAC	calculation of reactor accident consequences
CRDM	control rod drive mechanism
CRGR	Committee to Review Generic Requirements
cSv	centisievert
CVCS	chemical and volume control system
DRW	dry radioactive waste
DE	dose equivalent
DOE	U.S. Department of Energy
DOT	U.S. Department of Transportation
EA	environmental assessment
ECCS	emergency core cooling system
EDE	effective dose equivalent
EDO	Executive Director for Operations
EEDB	energy economic data base
EIS	environmental impact statement
EO	Executive Order
EPA	U.S. Environmental Protection Agency
EPRI	Electric Power Research Institute
FR	Federal Register
FSAR	final safety analysis report
FY	fiscal year
GDP	gross domestic product
GE	General Electric
GEIS	generic environmental impact statement
Guidelines	Regulatory Analysis Guidelines of the U.S. NRC
GWe	gigawatt electric
HAF	high aqueous feed
HAW	high activity waste

HEP	human error probability
HEPA	high efficiency particulate air
HESAP	human error sensitivity assessment of a PWR
HFPP	human factors program plan
HLW	high level waste
HPCS	high pressure core spray
HVAC	heating, ventilation, air conditioning
ICRP	International Commission on Radiological Protection
IDCOR	Industry Degraded Core Rulemaking
IEEE	Institute of Electrical and Electronic Engineers
IPE	individual plant examination
IPEEE	individual plant examination of external events
IREP	Interim Reliability Evaluation Program
IRRAS	Integrated Reliability and Risk Analysis System
LAW	low activity waste
LCF	latent cancer fatality
LCS	leakage control system
LER	licensee event report
LHE	latent health effect
LOCA	loss of coolant accident
LPCS	low pressure core spray
LQR	licensed quantity released
LWR	light water reactor
MACCS	MELCOR Accident Consequence Code System
MOV	motor operated valve
MOX	mixed oxide fuel
MRS	monitored retrievable storage
MT	metric tons
MTHM	metric tons of hazardous materials
MTU	metric tons of uranium
MWe	megawatt electric
NCRP	National Council on Radiation Protection and Measurements
NEPA	National Environmental Policy Act
NHLW	Non-HLW
NMED	Nuclear Material Event Database
NMSS	Office of Nuclear Material Safety and Safeguards
NPP	nuclear power plant
NPRDS	Nuclear Plant Reliability Data System
NRC	U.S. Nuclear Regulatory Commission
NRER	non-reactor event report
NRR	Office of Nuclear Reactor Regulation
OMB	Office of Management and Budget
PASNY	Power Authority of the State of New York
PNNL	Pacific Northwest National Laboratory
PRA	probabilistic risk assessment/analysis
PSE	Projekt Sicherkeitsstudien Entsorgung
PV	present value
PWR	pressurized water reactor
RCIC	reactor core isolation cooling

RECAP	Replacement Energy Cost Analysis Package
REIRS	Radiation Exposure Information and Reporting System
RES	Office of Nuclear Regulatory Research
RHR	residual heat removal
RMIEP	Risk Methods Integration and Evaluation Program
ROR	Reduction-Oxidation Reactor
RSS	reactor safety study
RSSMAP	RSS Methodology Applications Program
RWG	Regulatory Working Group
RWCU	Reactor Water Cleanup
SARA	system analysis and risk assessment
SBO	station blackout
SF	spent fuel
SGBD	steam generator blowdown
SGTR	steam generator tube rupture
SGTS	standby gas treatment system
SECY	Staff Papers Before the Commission
SLCS	standby liquid control system
SRM	Staff Requirements Memorandum
SRP	Standard Review Plan
SST	siting source term
Staff	NRC staff members
TAP	TMI Action Plan
TASC	The Analytic Sciences Corporation
TB	Turbine Building
THERP	technique for human error rate prediction
TMI	Three Mile Island
TRU	transuranic
URL	uniform resource locator
USI	unresolved safety issue
W	Westinghouse

1 Introduction

The past two decades have seen an increasing recognition that governmental actions need to account for their societal and economic impacts. As early as 1969, the National Environmental Policy Act required an assessment of environmental impacts of major federal actions including descriptions of alternatives and any unavoidable environmental insults. In December 1977, the U.S. Nuclear Regulatory Commission (NRC) established value-impact analysis guidelines (SECY-77-388A) to aid its decision-making. Executive Order 12291 was issued in February 1981 (46 FR 13193) requiring that executive agencies prepare regulatory impact analyses for all major rules and directing that regulatory actions be based on adequate information regarding the need for and consequences of proposed actions. Although the order was not binding on the NRC, the Commission decided to meet its spirit to enhance the effectiveness of NRC regulatory actions. Accordingly, in January 1983, the NRC issued *Regulatory Analysis Guidelines* (NUREG/BR-0058) for performing regulatory analyses for a broad range of NRC regulatory actions (NRC 1983c). These guidelines established a framework for 1) analyzing the need for and consequences of alternative regulatory actions, 2) selecting a proposed alternative, and 3) documenting the analysis in an organized and understandable format. In December 1983, the NRC issued *A Handbook for Value-Impact Assessment* (NUREG/CR-3568 [Heaberlin et al. 1983]) (hereafter called the "1983 Handbook"). Its basic purpose was to set out systematic procedures for performing value-impact assessments. Revision 1 to NUREG/BR-0058 (NRC 1984b) was issued in May 1984 to include appropriate references to the 1983 Handbook.

In 1995, NRC's guidance on preparing regulatory analyses was updated in Revision 2 to NUREG/BR-0058 (NRC 1995a), hereafter referred to as the "NRC Guidelines" or simply the "Guidelines." Revision 2 was issued to reflect the NRC's experience implementing Revision 1 of the Guidelines; changes in NRC regulations since 1984, especially the backfit rule (10 CFR 50.109) and the Commission's 1986 Policy Statement on Safety Goals for the Operation of Nuclear Power Plants (NRC 1986); advances and refinements in regulatory analysis techniques; regulatory guidance in Executive Order 12866 (58 FR 51735; October 4, 1993); and procedural changes designed to enhance the NRC's regulatory effectiveness.

This revision to NUREG/CR-3568 (hereafter called the "Handbook") has been prepared to accomplish several objectives. First, the expanded guidance included in Revision 2 of the NRC Guidelines has been incorporated. Second, the scope of the Handbook has been increased to include the entire regulatory analysis process (not only value-impact analyses) and to address not only power reactor, but also non-reactor applications.[1] Third, NRC experience and improvements in data and methodology since the 1983 Handbook have been incorporated. Fourth, an attempt has been made to make the Handbook more "user friendly." Fifth, the Handbook incorporates guidance included in the document *Economic Analysis of Federal Regulations Under Executive Order 12866* (Regulatory Working Group 1996). This document, which superseded the Office of Management and Budget's (OMB's) "Regulatory Impact Analysis Guidance" (reference 6 in the NRC Guidelines), was prepared by a federal interagency regulatory working group.

This Handbook has been designed to assist the analyst in preparing effective regulatory analyses and to provide for consistency among them. The guidance provided is consistent with NRC policy and, if followed, will result in an acceptable document. It must be recognized, however, that all conceivable possibilities cannot be anticipated. Therefore, the Handbook guidance is intended to allow flexibility in interpretation for special circumstances. It must also be recognized that regulatory analysis methods continue to evolve, along with the applicable data. The NRC and other federal agencies (e.g., OMB, the U.S. Environmental Protection Agency [EPA], and the U.S. Department of Transportation [DOT]) continue to undertake research and development to improve the regulatory decision-making process.

1.1 Purpose

The purpose of this Handbook is to provide guidance to the regulatory analyst to promote preparation of high-quality regulatory decision-making documents and to implement the policies of the NRC Guidelines. In fulfilling this purpose, there are several objectives of the Handbook.

First, the Handbook expands upon policy concepts included in the NRC Guidelines. The steps in preparing regulatory analyses are translated into implementable methodologies for the analyst. An attempt is made to provide the rationale behind current NRC policy to assist the analyst in understanding what the decision-maker will likely need in the regulatory analysis. Second, the Handbook has been expanded to address the entire regulatory analysis process, i.e., all six steps (see Handbook Section 1.2.2) identified in the NRC Guidelines. The 1983 Handbook only addressed value-impact analysis, just one element of a regulatory analysis. Also, unlike the 1983 Handbook, this Handbook addresses not only power reactor but also non-reactor applications.

Third, the Handbook has been updated to incorporate changes in policy and advances in methodology that have occurred since the 1983 Handbook was issued. Considerable research has been conducted by the NRC and other agencies on various aspects of regulatory decision-making. Also, NRC staff experience has resulted in significant modifications to the regulatory analysis process. Advances resulting from the above have been appropriately incorporated in this Handbook.

Fourth, the Handbook has consolidated relevant information regarding regulatory analyses. As mentioned above, many activities have improved the ability to make better decisions. The resulting information has been used in the preparation of this Handbook. Where the information is not presented explicitly, references lead the analyst to the appropriate documents.

Fifth, the Handbook provides standardized methods of preparation and presentation of regulatory analyses, including backfit and Committee to Review Generic Requirements (CRGR) regulatory analyses. Consistent application of the methods provided here will result in more directly comparable analyses, thus aiding decision-makers in evaluating and comparing various regulatory actions.

The Handbook cites numerous references throughout, often extracting information from them directly. Where practical, the bases for extracted information have been summarized from the references. However, this does not imply that the analyst should use the information exclusively without consulting the references themselves. Where supplied data seem to contradict the analyst's "common sense," examination of the references may be crucial.

1.2 Regulatory Analysis Overview

The following sections provide an overview of a regulatory analysis. Section 1.2.1 discusses key terms and concepts in a regulatory analysis. Section 1.2.2 discusses the appropriate steps.

1.2.1 Key Terms and Concepts

Backfitting. Backfitting is defined at 10 CFR 50.109(a)(1) as "the modification of or addition to systems, structures, components, or design of a facility; or the design approval or manufacturing license for a facility; or the procedures or organization required to design, construct or operate a facility; any of which may result from a new or amended provision in the

Commission rules or the imposition of a regulatory staff position interpreting the Commission rules that is either new or different from a previously applicable staff position... ." Backfitting requirements apply only to production and utilization facilities as those terms are defined at 10 CFR 50.2.

Backfit Regulatory Analysis. A backfit regulatory analysis is a regulatory analysis prepared for a generic backfit. A backfit regulatory analysis is prepared to meet the requirements of 10 CFR 50.109(c) and the NRC Guidelines.[2]

CRGR Regulatory Analysis. A Committee to Review Generic Requirements (CRGR) regulatory analysis is a regulatory analysis that satisfies the requirements of the CRGR Charter and the NRC Guidelines. CRGR regulatory analyses are prepared for proposed actions within the CRGR scope as set out in Chapter III of the CRGR Charter. In general, the scope covers new or amended generic requirements and staff positions to be imposed on one or more classes of power reactors.

Generic Backfit. A generic backfit is a backfit applicable to multiple facilities.

Plant-Specific Backfit. A plant-specific backfit is a backfit applicable to a single facility. Backfits of this type are subject to the requirements of NRC Management Directive 8.4 (NRC Manual Chapter 0514).

Regulatory Analysis. A regulatory analysis is a structured evaluation of all relevant factors associated with the making of a regulatory decision. As used by the NRC, a regulatory analysis consists of the six steps described in Handbook Section 1.2.2 and NRC Guidelines Chapter 4.

Safety Goal Evaluation. An evaluation prepared to determine whether a proposed generic safety enhancement backfit for nuclear power plants meets the safety goal screening criteria in the Commission's safety goal policy statement (see Appendix D).

Value-Impact (Benefit-Cost) Analysis. A value-impact analysis is a balancing of the benefits (values) and costs (impacts) associated with a proposed action or decision. Values and impacts should be evaluated in monetary terms when feasible, resorting to qualitative terms where conversion to monetary equivalents cannot be done. A value-impact analysis is a substantial part of a regulatory analysis.

1.2.2 Steps in a Regulatory Analysis

Chapter 4 of the NRC Guidelines provides for six steps in a complete regulatory analysis, corresponding with the six elements to be included in a regulatory analysis. The first step is identifying the problem and establishing the analysis objective. The nature of the problem and its history, boundaries, and interfaces must be clearly established. The objective is the conceptual improvement sought by the proposed regulatory action. It is typically a qualitative statement establishing a basis for judging the results of the subsequent analysis elements.

The second step is identifying alternative approaches to the problem and doing a preliminary analysis of these approaches. Development of a reasonably broad and comprehensive set of alternatives is required to ensure identification of all significant approaches. The initial set of alternatives is reduced by eliminating ones based on obvious feasibility, value, and impact considerations. Alternatives that cannot be clearly eliminated will be subjected to the next step (value-impact analysis).

The third step is estimating and evaluating values and impacts. Step 3 also includes preparation of a safety goal evaluation if the alternatives involve a proposed generic safety enhancement backfit to nuclear power reactors which is subject to the substantial additional protection standard at 10 CFR 50.109(a)(3). Safety goal evaluations are discussed in Chapter 3. There are many factors that complicate this step (e.g., imperfect knowledge, many possible evaluation methods, and

values and impacts that are difficult to quantify). Despite the difficulties, a best effort must be made to characterize the factors pertinent to a decision. Even if values and impacts cannot be sufficiently characterized, use of consistent methods, data, and presentation can form an adequate basis on which to prioritize alternative regulatory actions. Much of this Handbook addresses this step.

The fourth step is presenting results. A tabular presentation is typically optimal, with the results displayed to facilitate comparison of the evaluated alternatives. Values and impacts not quantified in monetary terms also need to be presented. The goal is to clearly convey the complex value-impact results to the decision-maker. It is also important to reveal the uncertainties associated with the results so that the decision-maker can assess the confidence associated with them. In this Handbook, steps three and four are together referred to as value-impact analysis.

The fifth step is preparing the decision rationale for selecting the proposed action. In this step the analyst recommends and justifies an action based on the previous analyses. Any decision criteria used in the selection are identified.

The sixth and final step is developing a schedule for the activities that will be required to implement the proposed actions. Implementation activities could include such things as needed analyses, approvals, procurement, installation and testing, procedure development, training, and reporting. The schedule should be realistic and can include alternative schedules if appropriate.

1.3 Handbook Overview

Chapter 1 provides introductory and conceptual information regarding the performance of a regulatory analysis and some historical perspective. The relationship of this Handbook with the NRC Guidelines and other NRC policy is established.

Chapter 2 explains the scope of regulatory analyses and the appropriate level of detail to be used.

Chapter 3 discusses the safety goal evaluation required by Chapter 3 of the NRC Guidelines for generic safety enhancement backfits to nuclear power reactors when the proposed backfit is subject to the substantial additional protection standard at 10 CFR 50.109(a)(3).

Chapter 4 presents the methodology to be used in performance of a regulatory analysis.

Chapter 5 presents detailed guidance on the performance of the value-impact analysis portion of a regulatory analysis for both power reactor and non-reactor facilities.

Chapter 6 lists all Handbook references.

Appendix A discusses topics of particular importance in regulatory analyses that are not covered specifically in other areas of the Handbook, especially human factors issues.

Appendix B contains supplementary information for the value-impact portion of a regulatory analysis.

Appendix C presents supplemental information on regulatory analyses for non-reactor facilities.

Appendix D reproduces the Safety Goals for the Operations of Nuclear Power Plants Policy Statement and the Backfit Rule.

Appendix E is an index to the Handbook.

1.4 Endnotes for Chapter 1

1. The variety of non-reactor facility types and the relatively non-integrated sets of available information add difficulty to the preparation of regulatory analyses for non-reactor facilities. Appendix C represents an attempt to coordinate available information to provide guidance for conducting a non-reactor regulatory analysis, especially the value-impact analysis segment. The nature of regulatory analyses for non-reactor facilities will continue to evolve as more analyses are performed and more information becomes available.

2. As discussed in Section 2.2 of the Handbook, some backfit regulatory analyses fall within the scope of the CRGR Charter, and therefore, are subject to the requirements for CRGR regulatory analyses as well. Commission approval of Revision 6 to the CRGR Charter was announced in SECY-96-032 issued in March 1996.

2 Scope of a Regulatory Analysis

Most NRC regulatory actions require some form of analysis and supporting documentation, the exact nature of which is determined by the type of action. This chapter discusses the scope of the particular type of analysis termed a "regulatory analysis," defined in Section 1.2.1.

2.1 When a Regulatory Analysis is Required

Section 2.2 of the NRC Guidelines states that, in general, all mechanisms proposed to be used by the NRC to establish or communicate generic requirements, guidance, requests, or staff positions that would affect a change in the use of resources by NRC licensees, include an accompanying regulatory analysis. Specific criteria for determining whether a regulatory analysis will need to be performed are also presented in Section 2.2 of the NRC Guidelines.

Section 2.1 of the NRC Guidelines makes it clear that a regulatory analysis is an integral part of NRC decision-making. It is necessary, therefore, that the regulatory process begin as soon as it becomes apparent that some type of regulatory action by the NRC to address an identified problem may be needed.

Many regulatory analyses will fall into the classifications of backfit regulatory analyses and/or CRGR regulatory analyses. Table 2.1 summarizes important characteristics of these two classifications of regulatory analyses. Additional information is provided in Sections 2.2 and 2.3 of this Handbook.

An additional consideration impacts regulatory analyses involving generic safety enhancement backfits to nuclear power plants that are subject to the substantial additional protection standard at 10 CFR 50.109(a)(3). As discussed in Chapter 3 of the Guidelines, a safety goal evaluation is needed for these regulatory analyses. The result of this evaluation determines the extent to which further development of the regulatory analysis is appropriate.

2.2 When a Backfit Regulatory Analysis is Required

The term "backfitting" is defined at 10 CFR 50.109(a)(1). Backfitting only applies to facilities licensed under 10 CFR Part 50. Such facilities are called production facilities or utilization facilities (these terms are defined at 10 CFR 50.2). A nuclear power plant is a utilization facility. For a detailed discussion of concepts related to backfitting, the reader is referred to the *Backfitting Guidelines,* NUREG-1409 (NRC 1990a). The guidance provided in this Handbook applies to generic backfits (defined in Section 1.2.1) and, in certain instances, plant-specific backfits as well (also defined in Section 1.2.1). NRC Management Directive 8.4 should be consulted for requirements related to plant-specific backfits.

Ordinarily, any proposed action fitting the definition of a backfit will require the preparation of a backfit regulatory analysis. The only instances where a backfit regulatory analysis will not be required for a proposed backfit are the three exceptions identified at 10 CFR 50.109(a)(4). These exceptions are determinations by the Commission or NRC staff, as appropriate, that:

- a modification is necessary to bring a facility into compliance with a license or the rules or orders of the Commission, or into conformance with written commitments by the licensee; or

- regulatory action is necessary to ensure that the facility provides adequate protection to the health and safety of the public and is in accord with the common defense and security; or

Table 2.1 Applications of backfit and CRGR regulatory analyses

Characteristic	Backfit Regulatory Analyses	CRGR Regulatory Analyses
Facilities	Production and utilization facilities (e.g., nuclear power plants).	Nuclear power plants; Materials licensees (to the extent directed by the Executive Director of Operations [EDO] or the Director of the Office of Nuclear Material Safety and Safeguards [NMSS]).
Type of Action	New or amended rule or staff position covering modification of or additions to systems, structures, components, or design of a facility or the procedures or organization required to design, construct, or operate a facility [with the three exceptions described at 10 CFR 50.109(a)(4)].	New or amended generic requirements and staff positions to be imposed on one or more classes of power reactors or materials licensees, including reductions in existing requirements.
Type of Backfit Covered	Backfits where there are substantial increases in the overall protection of the public health and safety or the common defense and security and the implementation costs are justified in view of the increased protection.	All backfits meeting other CRGR criteria, including backfits considered necessary to ensure adequate protection to public health and safety.

- the regulatory action involves defining or redefining what level of protection to the public health and safety or common defense and security should be regarded as adequate.

When one of these exceptions is relied upon for not performing a backfit regulatory analysis, a written evaluation meeting the requirements of 10 CFR 50.109(a)(6) and Section IV.B(ix) of the CRGR Charter (for proposed actions within the scope of the CRGR) must be prepared. Also, costs are not to be considered in justifying the proposed action.

A backfit regulatory analysis is similar to, and should generally follow the requirements for, a regulatory analysis.[1] There are certain requirements specific to a backfit regulatory analysis that are identified at 10 CFR 50.109(a)(3) and 10 CFR 50.109(c). These requirements are identified in Table 2.2 and at appropriate parts of the Handbook. Table 2.2 also cites where in the CFR the requirement is located and indicates where in the regulatory analysis the discussion of each

Table 2.2 Checklist for specific backfit regulatory analysis requirements

CFR Citation (Title 10)	Information Item to be Included in a Backfit Regulatory Analysis	Section of the Regulatory Analysis Where Item Should Normally be Discussed
50.109(a)(3)	Basis and a determination that there is a substantial increase in the overall protection of the public health and safety or the common defense and security to be derived from the backfit and that the direct and indirect costs of implementation for the affected facilities are justified in view of this increased protection.	Basis - Presentation of Results Determination - Decision Rationale
50.109(c)(1)	Statement of the specific objectives that the proposed backfit is designed to achieve.	Statement of the Problem and Objectives
50.109(c)(2)	General description of the activities that would be required by the licensee or applicant to complete the backfit.	Identification of Alternatives
50.109(c)(3)	Potential change in the risk to the public from the accidental offsite release of radioactive material.	Estimation and Evaluation of Values and Impacts
50.109(c)(4)	Potential impact on radiological exposure of facility employees.	Estimation and Evaluation of Values and Impacts
50.109(c)(5)	Installation and continuing cost associated with the proposed backfit, including the cost of facility downtime or construction delay.	Estimation and Evaluation of Values and Impacts
50.109(c)(6)	Potential safety impact of changes in plant or operational complexity, including the relationship to proposed and existing regulatory requirements.	Estimation and Evaluation of Values and Impacts
50.109(c)(7)	Estimated resource burden on the NRC associated with the proposed backfit and the estimated availability of such resources.	Burden - Estimation and Evaluation of Values and Impacts Availability - Implementation
50.109(c)(8)	Potential impact of differences in facility type, design, or age on the relevancy and practicality of the proposed backfit.	Presentation of Results Implementation

Table 2.2 (Continued)

CFR Citation (Title 10)	Information Item to be Included in a Backfit Regulatory Analysis	Section of the Regulatory Analysis Where Item Should Normally be Discussed
50.109(c)(9)	Whether the proposed backfit is interim or final and, if interim, the justification for imposing the proposed backfit on an interim basis.	Decision Rationale
50.109(c)	Consideration of how the backfit should be scheduled in light of other ongoing regulatory activities at the facility.	Implementation

item should normally appear. The analyst must be sure to integrate the 10 CFR 50.109 requirements into the backfit regulatory analysis. Section 2.3 of the Guidelines requires that the findings required by 10 CFR 50.109 are to be highlighted in a backfit regulatory analysis. The recommended method of highlighting backfit rule findings is a vertical line in the left margin adjacent to the text to be highlighted.

If the proposed backfit falls within the scope of the CRGR (as set out in Section III of the CRGR Charter), the information requirements identified in Section IV.B of the Charter and Section 2.3 of this Handbook should be incorporated into the backfit regulatory analysis. (Inclusion of these items will, in effect, render the backfit regulatory analysis a CRGR regulatory analysis). A proposed backfit involving a new or amended generic requirement or staff position to be imposed on one or more classes of nuclear power reactor licensees or materials licensees (to the extent directed by the EDO or the Director of NMSS) will ordinarily require CRGR review.

2.3 When a CRGR Regulatory Analysis is Required

The CRGR has the responsibility to review and recommend to the EDO approval or disapproval of requirements or NRC staff positions to be imposed on one or more classes of power reactors and, in some cases, on nuclear materials licensees. The review applies to requirements or positions which reduce existing requirements or positions and proposals which increase or change requirements. The CRGR's purpose, membership, scope, operating procedures, and reporting requirements are set out in the CRGR Charter. The most recent version of the Charter is Revision 6, issued in 1996 (NRC 1996c).

Section IV.B of the Charter lists the information that is required to be submitted to the CRGR for review of proposed actions within its scope. One item (identified in Section IV.B(v) of the Charter) is a regulatory analysis conforming to the direction in the NRC Guidelines and this Handbook.[2] There are other requirements included in Section IV.B as shown in Table 2.3. Table 2.3 includes the citation to the portion of the CRGR Charter where the requirement is found and also indicates where in the regulatory analysis the discussion of each item should normally appear. The analyst should generally ensure that each item in Table 2.3 is included in a regulatory analysis prepared for CRGR review. The items included in Table 2.3 are identified and discussed at appropriate parts of this Handbook. Section 2.3 of the Guidelines

Table 2.3 Checklist for specific CRGR regulatory analysis requirements

CRGR Charter Citation	Information Item to be Included in a Regulatory Analysis Prepared for CRGR Review	Section of the Regulatory Analysis Where Item Should Normally be Discussed
IV.B(i)	The proposed generic requirement or staff position as it is proposed to be sent out to licensees.	Implementation
	When the objective or intended result of a proposed generic requirement or staff position can be achieved by setting a readily quantifiable standard that has an unambiguous relationship to a readily measurable quantity and is enforceable, the proposed requirement should specify the objective or result to be attained rather than prescribing how the objective or result is to be attained.	Identification of Alternatives
IV.B(iii)	The sponsoring office's position on whether the proposed action would increase requirements or staff positions, implement existing requirements or staff positions, or relax or reduce existing requirements or staff positions.	Presentation of Results
IV.B(iv)	The proposed method of implementation.[3]	Implementation
IV.B(vi)	Identification of the category of power reactors or nuclear materials facilities/activities to which the generic requirement or staff position will apply.	Identification of Alternatives
IV.B(vii) IV.B(viii)	If the proposed action involves a power reactor backfit and the exceptions at 10 CFR 50.109(a)(4) are not applicable, the items identified at 10 CFR 50.109(c) and the required rationale at 10 CFR 50.109(a)(3) are to be included (these items are included in Table 2.2)[4]	See Table 2.2

Table 2.3 (Continued)

CRGR Charter Citation	Information Item to be Included in a Regulatory Analysis Prepared for CRGR Review	Section of the Regulatory Analysis Where Item Should Normally be Discussed
IV.B(x)	For proposed relaxations or decreases in current requirements or staff positions, a rationale is to be included for the determination that (a) the public health and safety and the common defense and security would be adequately protected if the proposed reduction in requirements or positions were implemented, and (b) the cost savings attributed to the action would be substantial enough to justify taking the action.[5]	Decision Rationale
IV.B(xii)	Preparation of an assessment of how the proposed action relates to the Commission's Safety Goal Policy Statement (see NRC Guidelines Chapter 3 and Handbook Chapter 3).	Estimation and Evaluation of Values and Impacts

requires that the findings required by the CRGR Charter are to be highlighted in a CRGR regulatory analysis. The recommended method of highlighting CRGR Charter findings is a vertical line in the right margin adjacent to the text to be highlighted.

2.4 Level of Detail

An overview of NRC policy regarding the level of detail to be provided in regulatory analyses is provided in Chapter 4 of the NRC Guidelines. The emphasis in implementation of the NRC Guidelines should be on simplicity, flexibility, and commonsense, both in terms of the type of information supplied and in the level of detail provided. The level of treatment given to a particular issue in a regulatory analysis should reflect how crucial that issue is to the bottom line recommendation of the regulatory analysis. In all cases, regulatory analyses are to be sufficiently clear and detailed for use by NRC decision-makers and other interested parties.

With respect to the appropriate level of detail, the analyst must first determine the level of effort to be expended in analyzing the problem. A greater expenditure of effort will result in a greater expenditure of NRC resources, and vice versa.

The expenditure of resources to analyze a regulatory action is to be correlated with the safety and cost impacts of the action. Chapter 4 of the Guidelines lists factors that should be considered to determine the appropriate level of detail.

This Handbook presents direct guidance for performing what is termed a "standard" analysis. This is expected to encompass one to two person-months, a level of effort believed sufficient for many regulatory analyses. The Guidelines and this

Handbook, including references suggested by this Handbook, should be sufficient for performing the analysis. Where larger levels of effort may be involved, this Handbook suggests additional methods and references which can be used. These could entail major efforts, possibly on the order of a person-year.

A decision tree has been developed to assist the analyst in determining the appropriate level of effort to be applied in a particular case (see Figure 2.1). If the NRC action will result in a regulatory burden on licensees, a regulatory analysis will typically be required. The level of effort will depend on the complexity of the issue. A complex issue would clearly justify a major effort based on the significant impacts of the regulatory decision. If NRC management specifically direct that a major effort be undertaken, the decision is clear. If the issue is not complex, the standard analysis should suffice. The level of detail to be included in the regulatory analysis document can generally be expected to follow the level of effort expended in performing the analysis. The Guidelines establish the minimum requirements. In determining the appropriate level of detail, the best guidance is that the analyst view the presentation objectively from the point of view of the decision-maker.

In cases where there is uncertainty as to the correct level of detail, it is probably better to err on the side of providing too much information. A decision-maker can always filter out unnecessary information, but may have considerable difficulty filling in the blanks. Tables and figures should be used to the maximum extent possible to convey information, particularly where the amount of information is substantial or where comparisons are involved.

2.5 Units

Regulatory analyses should be prepared consistently with NRC's final metrication policy statement (61 FR 31170; June 19, 1996). Regulatory analyses affecting more than one licensee should be prepared in dual (i.e., metric and English) units. Metric units should be shown first with the value in English units shown in parenthesis. Regulatory analyses affecting a single licensee should use the system of units employed by the licensee.

2.6 Regulatory Relaxations

NRC's position on regulatory analysis requirements for relaxation of regulatory requirements is in Section 2.2 of the Guidelines. Preparation of a regulatory analysis for a proposed relaxation is generally required. However, the backfit rule requirements in 10 CFR 50.109 and the safety goal evaluation process set out in Chapter 3 of the Guidelines are not applicable to proposed relaxations.

For all regulatory analyses of proposed relaxations, information should be presented in the decision rationale section (see Section 4.4) indicating whether:

1. The public health and safety and the common defense and security would continue to be adequately protected if the proposed reduction in requirements or positions were implemented.

2. The cost savings attributed to the action would be substantial enough to justify taking the action.

3. The proposed relaxation is optional or mandatory for affected licensees.

Inclusion of the three preceding items will satisfy the requirements in Section IV.B(x) of the CRGR Charter.

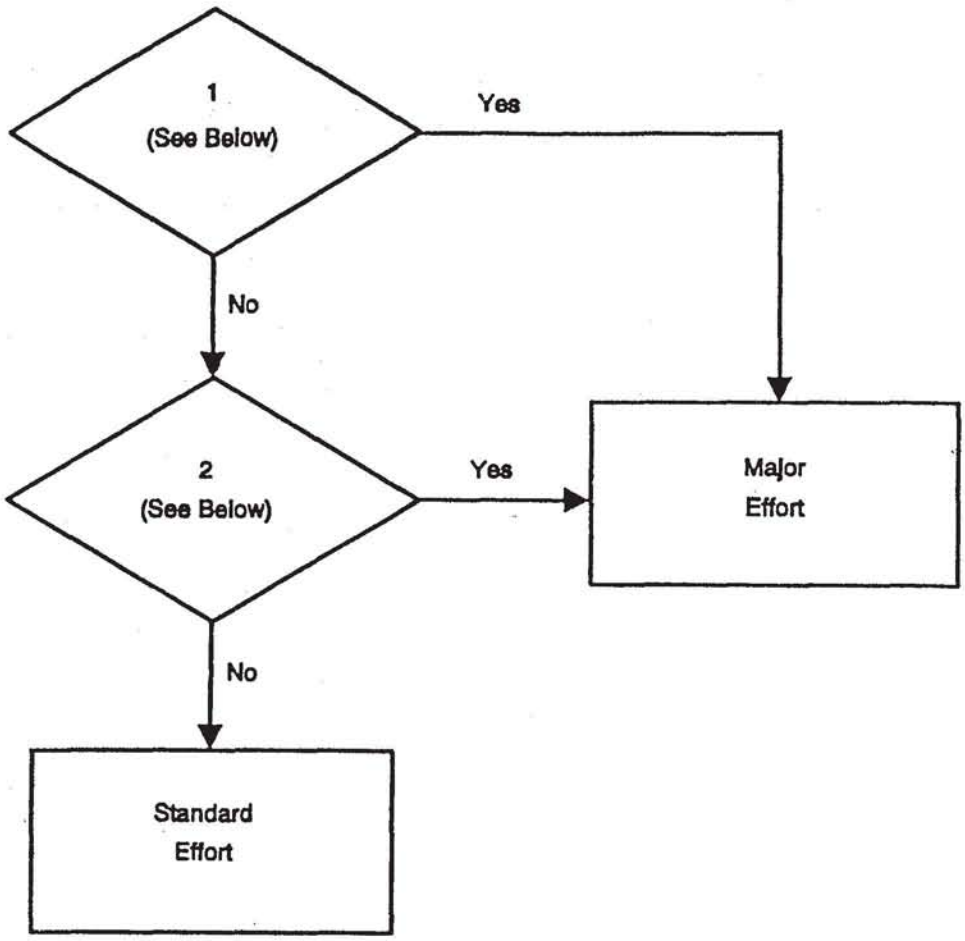

1. Has the Commission, EDO, or Office Director requested a major effort?

2. Are any of the following likely to occur:

- an annual effect on the economy of $100 million or more
- a major increase in costs or prices for consumers; individual industries; federal, state, or local government agencies or geographic regions
- significant adverse effects on competition, employment, investment, productivity, innovation, or on the ability of U.S.-based enterprises to compete with foreign-based enterprises in domestic or export markets
- roughly comparable values and impacts
- potential for considerable controversy, complexity, or policy significance?

Figure 2.1 Decision tree to determine level of effort

2.7 Endnotes for Chapter 2

1. NRC's Final Policy Statement on the use of probabilistic risk assessment (PRA) in nuclear regulatory activities (NRC 1995b) includes the statement that where appropriate, PRA should be used to support a proposal for additional regulatory requirements in accordance with 10 CFR 50.109 (see Section 5.6).

2. Section IV.B(iv) of the CRGR Charter states that a regulatory analysis is not required for backfits within the scope of 10 CFR 50.109(a)(4).

3. Section IV.B(iv) of the CRGR Charter also requires the concurrence of the NRC Office of the General Counsel (and any comments) and the concurrence of affected program offices or an explanation of their non-concurrence in the proposed method of implementation. These concurrences and related information can be included in the transmittal memorandum to the CRGR and need not be included in the CRGR regulatory analysis.

4. Section IV.B(viii) of the CRGR Charter also requires, in the case of power reactor backfits, a determination by the proposing office director that there is a substantial increase in the overall protection of the public health and safety or the common defense and security to be derived from the backfit and that the direct and indirect costs of implementation for that facility are justified in view of this increased protection. A statement of this determination may be included in the transmittal memorandum to the CRGR rather than in the CRGR regulatory analysis. Guidance on application of the "substantial increase" standard is in Attachment 3 to the CRGR Charter.

5. Section IV.B(x) of the CRGR Charter requires the proposing office director to determine that conditions (a) and (b) are met for the proposed action. A statement of this determination may be included in the transmittal memorandum to the CRGR rather than in the CRGR regulatory analysis.

3 Safety Goal Evaluation for Operation of Nuclear Power Plants

The Commission has directed that NRC's regulatory actions affecting nuclear power plants be evaluated for conformity with NRC's Policy Statement on Safety Goals for the Operations of Nuclear Power Plants (NRC 1990b). The Safety Goal Policy Statement is reproduced in Appendix D. The Policy Statement sets out two qualitative safety goals and two quantitative objectives. Both the goals and objectives apply only to the risks to the public from the accidental or routine release of radioactive materials from nuclear power plants.

The qualitative safety goals in the Policy Statement are

- individual members of the public should be provided a level of protection from the consequences of nuclear power plant operation such that individuals bear no significant additional risk to life and health

- societal risks to life and health from nuclear power plant operation should be comparable to or less than the risks of generating electricity by viable competing technologies and should not be a significant addition to other societal risks.

The two quantitative objectives in the Policy Statement are to be used in determining achievement of the qualitative safety goals. The objectives are

- the risk to an average individual in the vicinity of a nuclear power plant of prompt fatalities that might result from reactor accidents should not exceed 0.1% of the sum of prompt fatality risks resulting from other accidents to which members of the U.S. population are generally exposed

- the risk to the population in the area near a nuclear power plant of cancer fatalities that might result from nuclear power plant operation should not exceed 0.1% of the sum of cancer fatality risks resulting from all other causes.

Chapter 3 of the NRC Guidelines contains specific information implementing the quantitative objectives which the analyst should carefully follow.

Section 3.1 of the Guidelines states that a safety goal evaluation is needed for a proposed generic safety enhancement backfit to nuclear power plants which is subject to the substantial additional protection standard at 10 CFR 50.109(a)(3). Thus, proposals for a plant-specific backfit or for generic backfits within the exceptions at 10 CFR 50.109(a)(4)(i-iii) do not require a safety goal evaluation. Section 3.1 of the Guidelines also states that a safety goal evaluation is not needed for a proposed relaxation of a requirement affecting nuclear power plants.

Section 3.2 of the Guidelines states that a probabilistic risk assessment (PRA) should normally be used in performing a safety goal evaluation to quantify the risk reduction and corresponding values of a proposed new requirement.[1] NRC's Final Policy Statement on the use of PRA methods in nuclear regulatory activities (NRC 1995b) contains the following statement:

> The Commission's safety goals for nuclear power plants and subsidiary numerical objectives are to be used with appropriate consideration of uncertainties in making regulatory judgments on the need for proposing and backfitting new generic requirements on nuclear power plant licensees.

Table 5.2 in this Handbook contains a list of PRAs and their characteristics which can potentially be used in performing safety goal evaluations. Additional sources of PRAs are Individual Plant Examination (IPE) and Individual Plant Examination of External Events (IPEEE) reports submitted to the NRC by nuclear power plant licensees (see Section 5.6.1).[2]

Section 3.3.1 of the Guidelines provides an illustration of when an IPE report can be used in a safety goal evaluation. The example is that if a proposed backfit will only affect older boiling water reactors (BWRs), one or more IPEs conducted for older BWRs should be utilized in the evaluation. IPE and IPEEE reports are available through the NRC public document room (telephone: 202-634-3273 or 800-397-4209). A draft NUREG report was issued in late 1996 covering 1) insights gained from staff review of IPE reports, and 2) NRC's overall conclusions and observations including comparisons of IPE results with the Commission's safety goals (NRC 1996b). This report also contains a discussion of acceptable attributes of a quality PRA.

If conducted, a safety goal evaluation should be included in Section 3 of the regulatory analysis document which covers "estimation and evaluation of values and impacts." The results of the safety goal evaluation should be included in Section 4 of the regulatory analysis document which covers "presentation of results."

It is planned that additional supplementary material will be added to Chapter 3 of this Handbook in the future after more safety goal evaluation experience is gained.

As this version of the Handbook was being completed, a number of NRC staff activities were underway which relate to PRA use in safety goal evaluations and other NRC regulatory activities. These include

- completion of the staff's review of licensee-submitted IPEs
- evaluation of these IPEs for potential use in other regulatory activities, documented in a draft report to be published as NUREG-1560 (NRC 1996b)
- development of guidance on the use of PRA in plant-specific requests for license changes, including regulatory guides for use by licensees in preparing applications for changes and standard review plans for use by the NRC staff in reviewing proposed changes.

These activities should result in a more consistent and technically justified application of PRA in NRC's regulatory process. This work, along with staff work planned for fiscal year (FY) 1997 to initiate improvements to the economic models now used in NRC's offsite consequence analyses (e.g., in NRC's MELCOR Accident Consequence Code System [MACCS] code), should have a significant impact on the PRA-related portions of this Handbook. Consequently, the discussion in this Handbook on the use of PRA and offsite consequence estimates should be viewed as interim guidance that may be relied upon until the Handbook is updated to accommodate the NRC's new position on these regulatory issues. The staff expect to initiate this update as the preceding PRA guidance nears completion.

3.1 Endnotes for Chapter 3

1. SECY-95-079 contains a status update of NRC's PRA implementation plan. SECY-95-280 contains a framework for applying PRA in reactor regulation.

2. SECY-96-051 (NRC 1996a) contains the following statement:

   Licensees were not requested to calculate offsite health effects in Generic Letter 88-20 and, therefore, most of the IPE results cannot be used directly to compare with the quantitative health objectives of the Commission's Safety Goals (i.e., early and latent cancer fatalities). However, all licensees did estimate two related risk measures: containment failure frequencies and radionuclide release frequencies. These results can be examined in light of other studies of similar scope where explicit comparisons of plant risks with safety goals were performed, specifically

NUREG-1150. In this (indirect) way, insights can be provided on the IPE results and the current level of risk of U.S. plants, and comparisons made with the Commission's Safety Goals.

4 Regulatory Analysis Methods and Supporting Information

A regulatory analysis consists of six elements:

1. Statement of the problem and objective.
2. Identification and preliminary analysis of alternative approaches.
3. Estimation and evaluation of values and impacts (incorporating a safety goal evaluation in appropriate cases).
4. Presentation of results.
5. Decision rationale.
6. Implementation.

Each of these elements is very briefly summarized in Section 1.2.2 of this Handbook, and addressed in detail in the six major sections (4.1 through 4.6) in this chapter. The conceptual requirements associated with the regulatory analysis elements are also described. The safety goal evaluation process is discussed in Chapter 3.

To promote consistency, standard format and content guidance for regulatory analysis documents have been developed as shown in Figure 4.1. The six major sections of the regulatory analysis document are mandatory, as well as the basic information indicated for each. Subsections under each section may be included at the discretion of the analyst. Additional information not indicated in Figure 4.1 may be included as appropriate. The guidance provided is intended to allow the analyst the maximum amount of flexibility within the constraint of ensuring reasonable consistency among regulatory analysis documents.

4.1 Statement of the Problem and Objective

This element allows the analyst to carefully establish the character of the problem, its background, boundaries, significance, and what is hoped to be achieved (the objective).

The character of the problem consists of several factors. A concise description of the problem or concern needs to be developed. Included in the description is 1) the basis for the decision that a problem exists (e.g., a series of equipment failures during operation or a major incident that reveals an inherent design weakness), and 2) the fundamental nature of the problem (e.g., inadequate design, inadequate inspection or maintenance, operator failure, failure to incorporate adequate human factors). Care should be taken to neither define the problem too broadly (making it difficult to target a regulatory action) nor too narrowly (risking non-solution of the problem when the regulatory action is implemented). A background discussion of the problem should be provided, including relevant items from Section 4.1 of the Guidelines.

If appropriate, a statement of why 1) market forces cannot alleviate the problem [see Section I.A of RWG (1996) for a discussion of the role market forces play in regulatory decision-making], and 2) the NRC, as opposed to other organizations (e.g., licensees, vendors, owners groups or state agencies), is considering action should be included. The scope of the problem should be discussed in terms of the classes of licensees or facilities being affected, including their numbers, sizes, etc. Any distinction between NRC and Agreement State[1] licensees should be made. The implications of taking no action (i.e., maintaining the status quo) should be identified.

Table of Contents

Executive Summary

1 Statement of the Problem and Objective	Describe the nature of the problem, any relevant history, the boundaries of the problem, interfaces with other NRC activities, and a clear statement of the objective of the proposed action (see Section 4.1).
2 Identification and Preliminary Analysis of Alternative Approaches to the Problem	Identify alternative approaches considered and those approaches eliminated due to obvious reasons, provide the basis for eliminating alternatives, clearly explain alternatives to be considered, and determine the level of effort to be applied (see Section 4.2).
3 Estimation and Evaluation of Values and Impacts	If appropriate, evaluate compliance with the Safety Goals guidance (see Chapter 3 of the Guidelines and Handbook). Summarize methods used and results for all alternatives evaluated in the value-impact analysis (see Section 4.3).
4 Presentation of Results	Present results for alternatives evaluated, including discussion of supplemental considerations, uncertainties in estimates, and results of sensitivity analyses (see Section 4.4). Present results of safety goal evaluation if conducted.
5 Decision Rationale	Present the preferred alternative and the basis for selection, discuss any decision criteria used, identify and discuss the regulatory instrument to be used, and explain the statutory basis for the action (see Section 4.5).
6 Implementation	Present implementation milestones and associated schedule; discuss the relationships of the proposed action to other ongoing or proposed activities (see Section 4.6).

References

Appendixes (as needed)

Figure 4.1 Standard format and content of regulatory analyses

Establishment of problem boundaries entails the making of decisions as to how far the regulatory analysis will go in solving the problem. Systems, equipment, and operational activities at licensed facilities are highly interrelated, and there are typically numerous ways of viewing any particular problem. For example, consider the failure of a particular type of valve that serves two different safety-related coolant injection systems and concurrently serves as a containment isolation valve. The problem resulting from failure of the valve can be viewed as a system problem for either of the injection systems or a problem related to isolation valves or systems, or it could be viewed as part of a larger problem, such as inadequate maintenance or an inadequate quality assurance program.

Establishment of the appropriate boundaries can be a complicated matter. It is incumbent upon the regulatory analyst to identify other NRC programs (both ongoing and proposed) that could overlap or otherwise interface with the problem under consideration. The analyst should confer with those responsible for identified programs to determine appropriate boundaries. Interfacing programs should also be identified in the regulatory analysis document to facilitate communication between related programs.

A statement of what is hoped to be achieved is also referred to as the objective. This is a concise statement of the conceptual improvement sought by the proposed action. The objective should also be as specific as possible (assuring the public health and safety and minimizing occupational radiation exposures are two examples of objectives that are unacceptably broad). Precluding a fire from disabling redundant safety systems or reducing the probability of component failure to some particular value would be acceptably specific. Some elaboration may be required to show the reader how the objective would resolve the problem. The relationship of the objective to NRC's legislative mandates, safety goals[2] (NRC 1986), and most recent prioritization of generic safety issues (NUREG-0933 [NRC 1983b]) should be identified in appropriate cases.

4.2 Identification and Preliminary Analysis of Alternative Approaches

Identifying and evaluating alternative approaches to resolve problems is a key element in meeting the letter and spirit of NRC's regulatory analysis policy.

Developing a set of alternative approaches needs to be done early in the analysis process to help maintain objectivity and prevent premature drawing of conclusions.

The initial set of alternatives should be broad and comprehensive, but should also be sufficiently different to provide meaningful comparison and to represent the spectrum of reasonable possibilities. Alternatives that are minor variations of each other should be avoided. Table 4.1 contains a list of potential alternatives that may be used to begin identification of alternatives; however, the analyst should recognize that this generic list cannot envision every possibility associated with specific issues. Taking no action should be viewed as a viable alternative except in cases where action has been mandated by legislation or a court decision. If a viable new alternative is identified after analysis has begun, it should be added to the list of alternatives and treated in the same manner as the original alternatives.

Table 4.1 List of potential alternative actions

- Taking no action (i.e., maintaining the status quo eliminate for all entries).
- Installation of new equipment (various possibilities).
- Replacement of equipment (various possibilities).
- Modification of design.
- Modification of equipment.
- Removal of equipment.
- Change in inventory amount.
- Development of new procedures.
- Use of alternative processes.
- Modification of existing procedures.
- Deletion of existing procedures.
- Development of research programs to better understand the problem.
- Facility staffing changes.
- Technical specification changes.
- Imposition of license conditions.
- Augmented or decreased NRC inspection.
- Varying requirements across licensee groups.

Chapter II of the Regulatory Working Group's report *Economic Analysis of Federal Regulations Under Executive Order 12866* (RWG 1996) can be used in the identification and preliminary assessment of alternatives and to assist in determining which alternatives need to be subjected to a comprehensive value-impact analysis. The following six considerations adapted from the RWG report reflect principles included in Sections 4.2 and 4.6 of the NRC Guidelines:

1. Performance-oriented standards are generally preferred to engineering or design standards because performance standards generally allow licensees to achieve the regulatory objective in a more cost-effective manner. (Section IV.B(i) of the CRGR Charter supports performance-oriented standards.)

2. Different requirements for different segments or classes of licensees should be avoided unless it can be shown that there are perceptible differences in the impacts of compliance or in the values to be expected from compliance.

3. Alternative levels of stringency should be considered to better understand the relationship between stringency and values and impacts.

4. Alternative effective dates of regulatory compliance should be considered, with preference given to dates which favor cost-effective implementation of the regulatory action.

5. Alternative methods of ensuring compliance should be considered, with emphasis on those methods which are most cost effective.

6. The use of economic incentives (e.g., fees, subsidies, penalties, marketable permits or offsets, changes in liabilities or property rights, and required bonds, insurance, or warranties) instead of traditionally used command and control requirements should be considered in appropriate cases.

Once a broad and comprehensive list of alternatives has been developed, a preliminary analysis of the feasibility, values, and impacts of each alternative is performed. Some alternatives usually can be eliminated based on clearly exorbitant impacts in relation to values, technological infeasibility, severe enforcement or implementation problems, or other fairly obvious considerations. Reduction of the list of alternatives at this point in the analysis will reduce the resources needed to perform detailed evaluation of values and impacts. The regulatory analysis document should list all alternatives identified and considered, and provide a brief explanation of the reasons for eliminating certain alternatives during the preliminary analysis.

The level of analytical detail in the preliminary screening of alternatives need not be the same for all alternatives, particularly when one alternative can be shown to be clearly inferior or superior to the others. Rough estimates of values and impacts should be made using very simple analyses (in many cases, judgement may suffice). If several alternative actions are considered, comparison can be based on the "expected-value" of each.

Using the rough estimates, and guidance provided by the Commission, the EDO, or the appropriate NRC office director, the significance of the problem should be estimated. This determination will usually result in a conclusion that a major or standard effort will be expended to resolve the problem (see Figure 2.1). These two classifications are used to establish the level of detail to be provided in the regulatory analysis document and the amount of effort to be expended in performing the value-impact analysis. The significance of the problem will also help determine the priority assigned to its resolution.

Alternative regulatory documents which could be used to address regulatory concerns should also be identified at this time.[3] The most common forms of documents include regulations, policy statements, orders, generic letters, and

regulatory guides. Alternatives could include issuance of new documents or revision or deletion of existing ones. Other implementation means should be considered when appropriate (e.g., submission of proposed legislation to Congress).

Regulatory document alternatives should only be subjected to detailed value-impact analysis if preliminary assessment indicates significant differences in the values or impacts among such alternatives. Otherwise, the means of implementing the proposed action should be discussed in the section of the regulatory analysis document covering implementation (see Section 4.6).

For alternatives that survive preliminary screening and that require a backfit analysis according to 10 CFR 50.109(a)(3), a general description of the activities that would be required by the licensee or license applicant to complete the backfit should be prepared at this point in the regulatory analysis process. Preparation of this information will satisfy the requirements at 10 CFR 50.109(c)(2) and Section IV.B(vii)(b) of the CRGR Charter.

The alternative approaches that remain after the preliminary analysis is completed will be subjected to a detailed value-impact evaluation according to the guidance presented in Section 4.3 below. Alternative instruments will be subjected to detailed value-impact analysis only if the preliminary analysis indicates that significant differences among these alternatives exist.

4.3 Estimation and Evaluation of Values and Impacts

This section provides general guidance on performance of a value-impact analysis. The value-impact portion of a regulatory analysis encompasses steps three and four in the six-step regulatory analysis process discussed in Section 1.2.2. Detailed guidance on the value-impact analysis process is presented in Chapter 5 of this Handbook.

The following definitions of values and impacts (benefits and costs) are taken from NRC Guidelines Section 4.3 and used in this Handbook:

Values (Benefits). The beneficial aspects anticipated from a proposed regulatory action such as, but not limited to, the 1) enhancement of health and safety, 2) protection of the natural environment, 3) promotion of the efficient functioning of the economy and private markets, and 4) elimination or reduction of discrimination or bias.

Impacts (Costs). The costs anticipated from a proposed regulatory action such as, but not limited to, the 1) direct costs to NRC and Agreement States in administering the proposed action and to licensees and others in complying with the proposed action; 2) adverse effects on health, safety, and the natural environment; and 3) adverse effects on the efficient functioning of the economy or private markets.

The algebraic signs of values and impacts that can be quantified are provided in the description of attributes (see Section 5.5).

The process of selecting alternatives and performing a value-impact analysis is shown pictorially in Figure 4.2. Figure 4.2 shows each of the steps to be performed and the relationships among steps. The figure also indicates the section of this Handbook where each step is described in detail. The following discussion briefly explains each step.

For alternatives involving generic safety enhancement backfits to multiple operating nuclear power plants, the analyst begins with safety goal evaluation (i.e., whether core damage frequency (CDF) thresholds are satisfied or exceeded). Based on the guidance provided in Chapter 3 of the Guidelines, the analyst determines whether or not to proceed with the

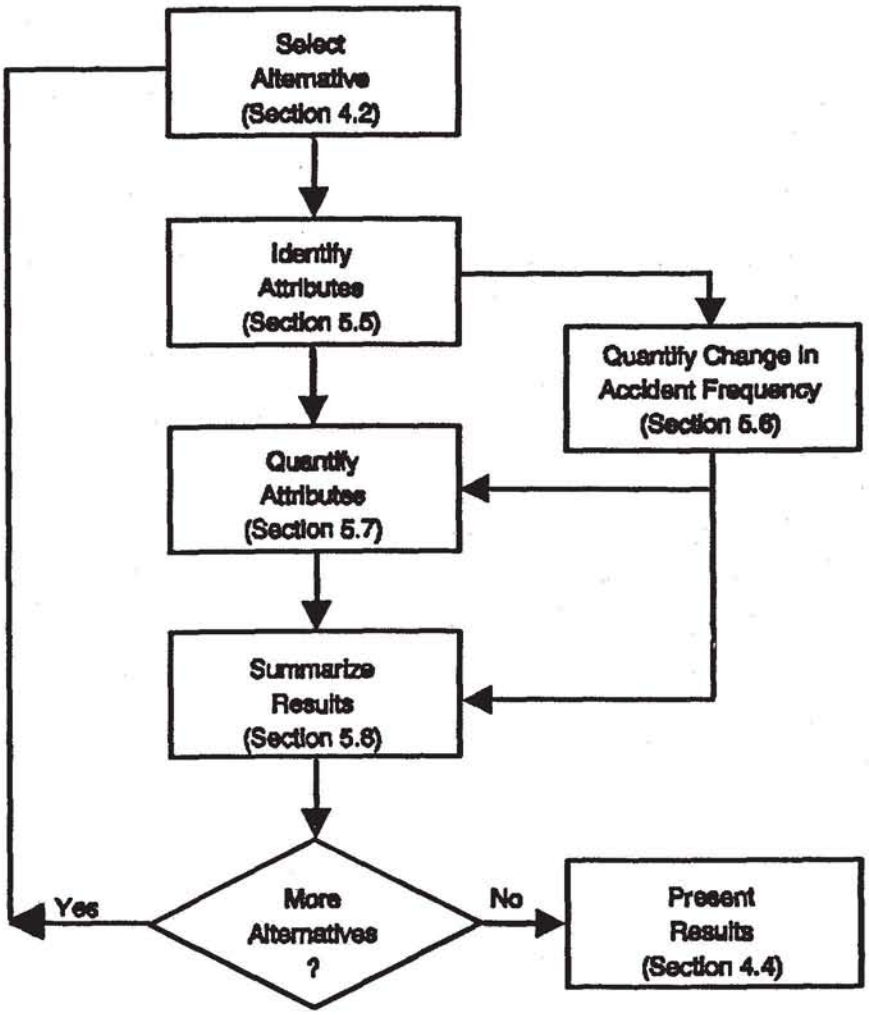

Figure 4.2 Steps in a value-impact analysis

value-impact analysis. If the safety goal evaluation of the proposed regulatory action results in a favorable determination, the analyst may presume that the substantial additional protection standard of 10 CFR 50.109(a)(3) is achievable (see Section 3.3.4 of the Guidelines).

Next, the analyst proceeds with the value-impact analysis by selecting one of the alternatives to be evaluated (see Section 4.2). For this alternative, those attributes that would be affected by implementation of the proposed action are identified. Attributes are standardized categories of values and impacts (e.g., public health [accident] or industry implementation cost).

The analyst should make every effort to use quantitative attributes relevant to the value-impact analysis. The quantification should employ monetary terms whenever possible. Dollar values should be established in real or constant dollar values (i.e., dollars of constant purchasing power). If monetary terms are inappropriate, the analyst should strive to use other quantifiable values. However, despite the analyst's best efforts at quantification, there may be some attributes which cannot be readily quantified. These attributes are termed "qualitative" and handled separately from the quantitative ones.

If appropriate, an estimate is made of the change in accident frequency which would result if the alternative were implemented. Parameters affected by the proposed action are identified, estimates are made for these affected parameters before and after implementation of the action, and the change in accident frequency is estimated by calculating the change in each affected accident sequence and summing them.[4]

Estimates are made for those attributes which lend themselves to quantification using standard techniques. Obtaining the appropriate data may be more complicated when a major effort is being undertaken. In cases where a proposed action would result in significantly different attribute measures for different categories of licensees, separate estimates and evaluations should be made for each distinct category (e.g., older plants vs. newer plants). In backfit regulatory analyses, it is also required that the potential impact of differences in facility type, design, or age on the relevancy and practicality of the proposed backfit be evaluated [10 CFR 50.109(c)(8)].

Section 4.3 of the Guidelines identifies the need to consider attributes in terms of the different groups that may be affected by a proposed action. This Handbook accommodates this need by the way that the suggested attributes are defined (e.g., impacts on the industry, the NRC, and other governmental units). If appropriate, qualitative considerations may also be evaluated. While these may be difficult to compare with the quantitative attributes, a consistent approach in their evaluation can result in a useful comparison among competing alternatives.

Section 4.3 of the Guidelines requires the use of best estimates. Often these are evaluated in terms of "expected value," the product of the probability of some event occurring and the consequences which would occur assuming the event actually happens. Sometimes, measures other than the expected value may be appropriate, such as the mean, median, or some other point estimate. However, the expected value is generally preferred.

Section 4.3.2 of the Guidelines states that transfer payments such as insurance payments and taxes should not be included as impacts. Transfer payments are payments that reflect a redistribution of wealth rather than a social cost. Additional information on identifying transfer payments is in Section III.C.2 of the RWG report (RWG 1996).

Depending upon the level of effort, either sensitivity or uncertainty analyses should be performed while quantifying the attributes to estimate the effect upon the results of variations in input parameters. Hypothetical best- and worst-case consequences may be estimated for sensitivity analyses. The output from the sensitivity analyses is used to determine the importance of various parameters and to approximate the uncertainties associated with the results. Actual uncertainty analyses should be more rigorous. A number of techniques are available, each with differences in usefulness of results and the amount of resources required. Uncertainty analyses should produce actual probability distributions for the overall results based on assumed distributions for selected input parameters. The differences between sensitivity and uncertainty analyses and their respective roles in regulatory analysis are discussed in Section 5.4.

At this point, the above steps are repeated if there is another alternative to be evaluated. If not, results for all evaluated alternatives are put into a form for presentation in the regulatory analysis document. Guidance for performing each of the above steps is provided in detail in Chapter 5.

4.4 Presentation of Results

The following items must be included in the presentation of results section of the regulatory analysis document for each alternative:

- results of the evaluation for compliance with the Safety Goal guidance, if appropriate (see Section 4.4 of the Guidelines)
- presentation of the net value (i.e., the algebraic sum of the attributes) using the discount rate procedures stated in Section 4.3.3 of the Guidelines and discussed in Sections 5.7 and B.2 of this Handbook
- estimates for each attribute for each alternative (the analyst can choose to present the estimates in tabular or graphical form if such presentation would aid the reader)
- presentation of any attributes quantified in non-monetary terms in a manner to facilitate comparisons among alternatives
- the distribution of values and impacts on various groups if significant differences exist between recipients of values and those who incur impacts (see Section 4.4 of the Guidelines)
- discussion of key assumptions and results of sensitivity analyses or uncertainty analyses
- impacts on other NRC programs and federal, state, or local government agencies.

Key assumptions are to be specifically stated so that readers of the regulatory analysis have a clear understanding of the analysis and the decision-maker will be able to assess the confidence to place in the results. Sources and magnitudes of uncertainties in attribute estimates and the methods used to quantify sensitivity or uncertainty estimates should be discussed in all regulatory analyses.

For alternatives projected to result in significantly different attribute measures for different categories of licensees, separate evaluations should be made for each distinct category. In cases where significant differences exist, their distributions with respect to the various groups involved should be discussed.

The effects of the proposed action on other NRC programs need to be assessed. These could include eliminating or creating a need for other programs; use of limited NRC resources resulting in postponement or rescheduling of other programs; modifying accident probabilities resulting in changes to priority of, or need for, other programs; or developing information with a bearing on other programs. Effects on other government agencies, if any, should also be assessed and reported.

In cases where uncertainties are substantial or where important values cannot be quantified, alternatives that yield equivalent values may be evaluated based on their cost-effectiveness. This methodology should also be used when the levels of values are specified by statute.

Proposed actions subject to the backfit rule should be evaluated against the following two criteria from 10 CFR 50.109(a)(3):

- Is there a substantial increase in the overall protection of the public health and safety or the common defense and security to be derived from the backfit?

- Are the direct and indirect costs of implementation justified in view of this increased protection?

Guidance on application of the "substantial increase" standard is in Attachment 3 to the CRGR Charter. Each alternative that meets both of the preceding criteria should be so indicated, and a discussion of why the criteria are met should be developed. Backfitting will be required by the NRC only if both criteria are met.

For CRGR regulatory analyses, the following information (from Table 2.3) should be included in the presentation of results:

- The sponsoring office's position on whether the proposed action would increase requirements or staff positions, implement existing requirements or staff positions, or relax or reduce existing requirements or staff positions.

4.5 Decision Rationale

This element of the regulatory analysis provides the basis for selection of the recommended alternative over the other alternatives considered. In selecting the preferred alternative, decision criteria are used and reported in the regulatory analysis document. Section 4.5 of the Guidelines gives the minimum set of decision criteria to be used, as well as other considerations.

The net-value calculation is a compilation of all of the attributes that can be quantified in monetary terms. Certain attributes are generally quantified in other than monetary terms (e.g., public health [accident], which is measured in person rems of exposure) and converted to monetary terms with an established conversion factor (see Section 5.7.1.2). These attributes are included in the net-value calculation. To aid the decision maker, the net value is to be computed for each alternative.

In considering the net value, care must be taken in interpreting the significance of the estimate. An algebraically positive estimate would indicate that the action has an overall beneficial effect; a negative estimate would indicate the reverse. However, if the net value is only weakly positive or negative, it would be inappropriate to lean strongly either way since minor errors or uncertainties could easily change the sign of the net value.

If the net value is calculated to be strongly positive or negative, the result can be given considerable significance since the variations in the assumptions or data would be much less likely to affect the sign of the net value. Even so, other considerations may overrule the decision supported by the net value (e.g., qualitative factors such as those embodied in the "qualitative" attributes).

Non-quantifiable attributes can only be factored into the decision in a judgmental way; the experience of the decision-maker will strongly influence the weight that they are given. These attributes may be significant factors in regulatory decisions and should be considered, if appropriate.

In addition to being the "best" alternative based on monetary and non-monetary considerations, the selected alternative must be within the NRC's statutory authority and, when applicable, consistent with NRC's safety goals and policy. A showing of acceptable impact of the proposed action on other existing and planned NRC programs and requirements is also necessary. This will ensure that there are no negative safety impacts in other areas, that NRC resources are being used responsibly, and that all actions are adequately planned and coordinated. Any other relevant criteria may be used with adequate documentation in the regulatory analysis.

Recommended actions in backfit regulatory analyses must meet the two additional criteria from 10 CFR 50.109(a)(3), namely that 1) there is substantial increase in the overall protection of the public health and safety or the common defense and security to be derived from the backfit, and 2) the direct and indirect costs of implementation are justified in view of this increased protection. The recommended action must be shown to meet these criteria, and, therefore, must be selected from those alternatives shown to meet the criteria.

Each proposed alternative should be reviewed to determine whether it is an interim or final action. In cases where the action is interim, it is necessary to develop an adequate justification for imposing the proposed backfit on an interim basis. If such justification cannot be satisfactorily developed, the alternative should be dropped from further consideration.

For CRGR regulatory analyses, the following information (from Table 2.3) should be included in the decision rationale:

- For proposed relaxations or decreases in current requirements or staff positions, a rationale for the determination that 1) the public health and safety and the common defense and security would continue to be adequately protected if the proposed reduction in requirements or positions were implemented; and 2) the cost savings attributed to the action would be substantial enough to justify taking the action, and clearly outweigh any reduction in benefits.

Recommended actions in CRGR regulatory analyses involving proposed relaxations or decreases in current requirements or staff positions must meet the following two additional criteria found in Section IV.B(x) of the CRGR Charter: 1) the public health and safety and the common defense and security would continue to be adequately protected if the proposed reduction in requirements or positions were implemented, and 2) the cost savings attributed to the action would be substantial enough to justify taking the action, and clearly outweigh any reduction in benefits. Also, the analysis must indicate whether the proposed relaxation or decrease in current requirements or staff positions is optional or mandatory.

4.6 Implementation

An implementation schedule for the proposed action must be prepared. The schedule must identify all major steps or actions to be taken by all affected parties (the NRC, Agreement States, licensees, and any others), and the dates or amounts of time allocated to accomplish each step. The schedule must be realistic and allow sufficient time for such factors as needed analyses, approvals, procurement, installation and testing, and training. Anticipated downtime of licensee facilities to implement the proposed action must be specifically identified. Availability and lead time required for acquisition and installation of new equipment and replacement parts must be addressed. For NRC planning purposes, short- and long-term actions are to be identified in such a way as to clearly differentiate the two.

For backfit regulatory analyses, the implementation schedule should account for other ongoing regulatory activities at the facility. The backfit regulatory analysis document should describe how this is accomplished in the recommended schedule. For CRGR regulatory analyses, the proposed method of implementation and the proposed generic requirement or staff position as it is proposed to be sent out to licensees should be included in the implementation section (see Table 2.3).

The implementation section of the regulatory analysis document should also identify the proposed NRC instrument (e.g., rule, regulatory guide, policy statement) for implementing the proposed action and the reasons for selecting the proposed instrument. The relationship of the proposed action to other NRC programs, actions, and requirements, both existing and proposed, should be established. To the extent possible, the analyst should assess the effects of implementation of the proposed action on the priorities of other actions and requirements and the potential need to revisit other regulatory analyses.

4.7 Endnotes for Chapter 4

1. Agreement States are states which have entered into an agreement with the NRC under Section 274b of the Atomic Energy Act to assume regulatory authority over byproduct materials, source materials, and small quantities of special nuclear materials insufficient to form a critical mass.

2. The Commission has directed NRC staff to ensure that future regulatory actions involving generic safety enhancements to nuclear power plants are evaluated for conformity with the NRC Safety Goals (NRC 1990b).

3. NUREG/BR-0070 (NRC 1984a) discusses various types of formal NRC documents. Attachment 2 to the CRGR Charter identifies mechanisms that can and cannot be used to establish, interpret, or communicate generic requirements or staff positions to licensees.

4. Although most actions are expected to affect risk through a change in accident frequency, some may change consequences instead. Evaluating the change in risk for these latter actions is discussed in Section 5.7.1.1.

5 Value-Impact Analysis

The discussions presented in this chapter generally apply to both power reactor and non-reactor facilities. To simplify the presentation, the term "facility" has been selected to serve as the generic indicator for both types. Where the discussion is specific to power reactor versus non-reactor facilities, this will be indicated. Material supplemental to that presented in this chapter for power reactor and non-reactor value-impact analyses is included in Appendixes B and C, respectively.

5.1 Background

Value-impact analysis is one form of formal decision analysis, not necessarily binding. Formal decision methods can

- help the analyst and decision-maker clearly define and think through the problem
- segment complex problems into conceptually manageable portions
- provide a logical structure for the combination of issues contributing to a decision
- clearly display beneficial and detrimental aspects of a decision
- provide a record of the decision rationale, helping to provide documentation, defensibility, and reproducibility
- focus debate on the specific issues of contention, thereby assisting resolution
- provide a framework for the sensitivity testing of data and assumptions.

However, limitations must be noted. Formal decision methods cannot

- completely remove subjectivity
- guarantee that all factors affecting an issue are considered
- produce unambiguous results in the face of closely valued alternatives and/or large uncertainties
- be used without critical appraisal of results; to use a decision analysis method as a black box decision-maker is both wrong and dangerous.

5.2 Methods

The value-impact portion of a regulatory analysis encompasses the third and fourth steps of the complete six-step regulatory analysis process discussed in Section 1.2.2. Value-impact analysis identifies and estimates the relevant values and impacts likely to result from a proposed NRC action. The methodology outlined in this chapter guides the systematic definition and evaluation of values and impacts. It also provides guidance on the reporting of results.

Values and impacts are classified as "attributes." Attributes are the principal components of value-impact assessment that are used to characterize the consequences of a proposed action. Any given NRC action can affect a large number of factors within the public and private sectors. The attributes represent the factors that are most frequently affected by a proposed NRC action. The attributes affected by any given proposed action will vary, however, and the analyst will have to determine the appropriateness of each attribute. Attributes, whether values or impacts, can have either positive or negative algebraic signs, depending on whether the proposed action has a favorable or adverse effect. The sign conventions are as follows: favorable consequences are positive; adverse consequences are negative. Each attribute measures the change from the existing condition due to the proposed action. Attributes are discussed in detail in Sections 5.5 and 5.7.

Section 4.4 of the Guidelines requires that the value-impact of an alternative be quantified as the "net value" (or "net benefit"). To the extent possible, all attributes, whether values or impacts, are quantified in monetary terms and added together (with the appropriate algebraic signs) to obtain the net value in dollars. The net value calculation is generally favored over other measures, such as a value-impact ratio or internal rate of return (RWG 1996, Section III.A.2).[1]

The net-value method calculates a numerical value that is intended to summarize the balance between the favorable and unfavorable consequences of the proposed action. The basic perspective of the net-value measure is national economic efficiency. All values and impacts are added together and the total is intended to reflect the aggregate effect of the proposed action on the national economy. The net-value measure does not, and is not intended to, provide any information about the distribution of values and impacts within the national economy. The values and impacts to all affected parties are simply added together.

Section 4.4 of the Guidelines states that if significant differences exist between recipients of values and those who incur impacts, the distribution of values and impacts on various groups should be presented and discussed. Section III.A.8 of the 1996 RWG report supports this position.

To calculate a net value, all attributes must be expressed in common units, typically dollars. Person-rems of averted exposure, a measure of safety value, is converted to dollars via a dollar/person-rem equivalence factor (see Section 5.7.1.2). Net value is an absolute measure. It indicates the magnitude of the proposed action's contribution toward the specified goals. When faced with a choice between two mutually exclusive actions, the "optimal" decision is to select the action with the larger net value.

5.3 Standard Analysis

Section 2.4 introduced the concept of a standard regulatory analysis, generally expected to encompass approximately one to two person-months of effort using specific guidance provided in this Handbook. The standard analysis should be adequate for most regulatory analyses, requiring guidance only from the NRC Guidelines, Handbook, and appropriate references.

Sections 5.4-5.8 and Appendixes A, B, and C provide information for the level of detail deemed sufficient for a standard regulatory analysis. For those issues which require major levels of effort, this Handbook suggests additional methods and references which should prove useful. In general, the numerical values provided by this Handbook represent "generic" values which, in practice, apply better to multiple licensees than to individual licensees. For regulatory actions involving individual licensees, plant-specific values are recommended. However, as these are often unavailable, the analyst may be limited in some cases to applying generic values to plant-specific cases.

5.4 Treatment of Uncertainty

Chapter 4 of the NRC Guidelines requires that uncertainties be addressed in regulatory analyses, both for exposure and cost measures. In addition, NRC's Final Policy Statement on the use of probabilistic risk assessment (PRA) in nuclear regulatory activities (NRC 1995b) states that sensitivity studies, uncertainty analysis, and importance measures should be used in regulatory matters, where practical within the bounds of the state-of-the-art. Uncertainties in exposure measures, especially those related to facility accidents, have traditionally been difficult to estimate. With respect to power reactor facilities, much has been written about uncertainty analysis in risk assessments. The more rigorous assessments typically provide an uncertainty analysis, usually performed via stochastic simulation on a computer. Briefly, the analyst determines probability distributions for as many of his input parameters as deemed necessary and practical. A computer code then samples values from each distribution randomly and propagates these values through the risk equation to yield one result. When repeated a large number of times (at least several hundred), a probability distribution for the result is generated, from which the analyst can extract meaningful statistical values (e.g., mean, standard deviation, median, and upper and lower bounds for given confidence levels).

Risk assessments for non-reactor facilities often identify best estimates only. Some have provided uncertainty ranges (see Appendix C), but their development has generally been less rigorous than that for reactor facilities. On the positive side, accident scenarios for non-reactor facilities are much less complex than for power reactors, facilitating uncertainty estimation, at least from a calculational perspective.

This Handbook is not intended to provide basic information on probability and statistics, and therefore does not attempt to describe the details of uncertainty analysis techniques. The analyst needing information on these topics is referred to textbooks on probability and statistics, as well as the following references: Seiler (1987), Iman and Helton (1988), Morgan and Henrion (1990), and DOE (1996). Instead, this Handbook presents a general discussion of the types of uncertainty that will be encountered in a regulatory analysis, primarily the value-impact portion, and outlines some of the more recent approaches to deal with them.

5.4.1 Types of Uncertainty

Vesely and Rasmuson (1984) identified seven categories of uncertainties in PRA, the majority of which, if treated at all, have only recently begun to receive attention. The seven categories are uncertainties in data, analyst assumptions, modeling, scenario completeness, accident frequencies, accident consequences, and interpretation. These seven categories, going from first to last, represent a progression from uncertainties in the PRA input to higher-level uncertainties with the PRA results. Vesely and Rasmuson considered these categories to be generally applicable to any modeling exercise, not just a PRA. Thus, they would also apply to the cost analysis portion of the regulatory analysis.

The first category, data uncertainty, is the most familiar and most often treated. It can be divided into four groups: population variation, imprecision in values, vagueness in values, and indefiniteness in applicability. Population variation refers to parameter changes from scenario to scenario, usually due to physical causes. The variations occur among the random variables which, when treated as constants, give a false impression of the stability of the results. Parameter imprecision and vagueness refer to separate concepts. Imprecision occurs when only limited measurements are available from which to estimate parameter values. Vagueness occurs when definitive values or intervals cannot be assigned to parameters. Indefinite applicability deals with the extrapolation of parameter values to situations different from those for which they were derived (e.g., extrapolating component failure data for normal environments to accident conditions).

The second category, analyst uncertainty, refers to variations in modeling and quantification which arise when different analysts perform different portions of the analysis. Often included with data uncertainty, analyst uncertainty provides its own separate contribution. Modeling uncertainty, the third category, arises from the indefiniteness in how comprehensive

and how well characterized are the numerous models in the analysis. Do the models account for all significant variables? How well do the models represent the phenomena? Is the dependence between two phenomena accurately modeled? Similar to modeling uncertainty is completeness uncertainty, the fourth category. It differs only in that it occurs at the initial, identification stage in the analysis. When the analytic "boundaries" are drawn at the start of the analysis, how can one be sure that all "important" items have been included (e.g., the Three-Mile Island core-damage scenario was not specifically identified in PRAs until it had occurred)? Even if the important items have been included, are their interrelationships adequately defined (if even known)?

The last three uncertainty categories—those for accident frequencies and consequences, and interpretation—deal with the analytic output and results. Accident frequency uncertainties arise from two sources: variations between accidents of the same type and limited knowledge of the data, models, and completeness. Accident consequence uncertainties parallel those in accident frequency, except that they involve consequence modeling rather than frequency estimation. Interpretation uncertainty arises from the combination of all previous uncertainties plus the difficulty in conveying the information to the decision-maker. Even the most precise uncertainty analysis can be wasted if the meaning cannot be transferred to the decision-maker. Often, this results from difficulty in the way the results are presented. Ernst (1984) provides insight on reducing the uncertainty in interpretation of results.

5.4.2 Uncertainty Versus Sensitivity Analysis

As defined by Vesely and Rasmuson, uncertainty and sensitivity analyses are similar in that both strive to evaluate the variation in results arising from the variations in the assumptions, models, and data. However, they differ in approach, scope, and the information they provide.

Uncertainty analysis attempts to describe the likelihood for different size variations and tends to be more formalized than sensitivity analysis. An uncertainty analysis explicitly quantifies the uncertainties and their relative magnitudes, but requires probability distributions for each of the random variables. The assignment of these distributions often involves as much uncertainty as that to be quantified.

Sensitivity analysis is generally more straightforward than uncertainty analysis, requiring only the separate (simpler) or simultaneous (more complex) changing of one or more of the inputs. Expert judgment is involved to the extent that the analyst decides which inputs to change, and how much to change them. This process can be streamlined if the analyst knows which variables have the greatest effect upon the results. Variation of inputs one at a time is preferred, unless multiple parameters are affected when one is changed. In this latter case, simultaneous variation is required. Hamby (1993) provides a detailed description of the most common techniques employed in sensitivity analysis.

Vesely and Rasmuson identify which of the seven types of uncertainties encountered in PRAs are best handled by uncertainty versus sensitivity analysis. They are as follows:

1. Data Uncertainty: Use uncertainty analysis for population variation and value imprecision, sensitivity analysis for value vagueness and indefiniteness in applicability.

2. Analyst Uncertainty: Use sensitivity analysis.

3. Modeling Uncertainty: Use sensitivity analysis.

4. Completeness Uncertainty: Use sensitivity analysis.

5. Frequency Uncertainty: Use uncertainty analysis for variation from one accident to another, sensitivity analysis for the limited knowledge of the data, models, and completeness.

6. Consequence Uncertainty: Use uncertainty analysis for variation from one accident to another, sensitivity analysis for the limited knowledge of the data, models, and completeness.

7. Interpretation Uncertainty: Use sensitivity analysis.

5.4.3 Uncertainty/Sensitivity Analyses

Three major NRC studies involving detailed uncertainty/sensitivity analyses were NUREG-1150, *Severe Accident Risks: An Assessment for Five U.S. Nuclear Power Plants* (NRC 1991); NUREG/CR-5381, *Economic Risk of Contamination Cleanup Costs Resulting from Large Non-Reactor Nuclear Material Licensee Operations* (Philbin et al. 1990); and NUREG/CR-4832, *Analysis of the LaSalle Unit 2 Nuclear Power Plant: Risk Methods Integration and Evaluation Program (RMIEP)* (Payne 1992). The first and third studies address reactor facilities, the second non-reactor facilities. The approach used in each study is summarized below.

5.4.3.1 NUREG-1150

"An important characteristic of the PRAs conducted in support of this report [NUREG-1150] is that they have explicitly included an estimation of the uncertainties in the calculations of core damage frequency and risk that exist because of incomplete understanding of reactor systems and severe accident phenomena." With this introduction, NUREG-1150 identified four steps in the performance of its uncertainty/sensitivity analysis:

1. Define the Scope. The total number of parameters that could be varied to produce uncertainty estimates was quite large and limited by computer capacity. Thus, only the most important sources were included, these sources being identified from previous PRAs, discussion with phenomenologists, and limited sensitivity analyses. For those parameters important to risk and having large uncertainties and limited, if any, data, subjective probability distributions were generated by expert panels.

2. Define Specific Uncertainties. Each section of the risk assessment was conducted at a slightly different level of detail, none of which to the degree involved in a mechanistic analysis. This resulted in the uncertain input parameters being "high level" or summary parameters, for which their relationships with their fundamental physical counterpart parameters were not always clear. This resulted in Vesely and Rasmuson's "modeling uncertainties." In addition, "data uncertainties" arose from limited knowledge of some important physical or chemical parameters. NUREG-1150 included both types of uncertainty, with no consistent effort to distinguish between them.

3. Define Probability Distributions. Probability distributions were developed by several methods, paramount among these being "expert elicitation" (discussed below). "Standard" distributions employed in previous risk assessments were used when the experts' estimation was not needed.

4. Combination of Uncertainties. The Latin hypercube method, a specialized form of stochastic simulation, was employed to sample from the various probability distributions. The sampled values were propagated through the constituent analyses to produce probability distributions for core damage frequency and risk. Results were presented graphically as histograms and complementary cumulative distribution functions showing the mean, median, and two-sided 90% confidence intervals.

A major innovation of the NUREG-1150 project was the development of a formal method for elicitation of expert judgment. Nine steps were involved:

1. Selection of Issues. The initial list of issues was identified from the important uncertain parameters specified by each plant analyst.

2. Selection of Experts. Seven expert panels were assembled to address issues in accident frequency (two panels), accident progression and containment loading (three panels), containment structural response (one panel), and source terms (one panel). Selection was based on recognized expertise in the nuclear industry, the NRC and its contractors, and academia. Each panel contained 3-10 experts.

3. Elicitation Training. Decision analysis specialists trained both the experts and analysis team members in elicitation methods, including the psychological aspects of probability estimation. The experts perfected their estimation techniques by conjuring probabilities for items for which "true" values were known.

4. Presentation and Review of Issues. The analysis staff formally presented the relevant issues to each panel over the course of several days. Interactive discussions ensued.

5. Preparation of Expert Analyses. Over a periods ranging from one to four months, each panel deliberated on its issues. However, each panel member arrived at his/her own quantitative results.

6. Expert Review and Discussion. At a final meeting, each expert presented his/her analysis which, in some cases, resulted in members modifying their preliminary results subsequent to the meeting.

7. Elicitation of Experts. Two analysis staff members, one trained in elicitation techniques, the other familiar with the technical subject, interviewed each expert privately. The expert's final quantitative results were documented.

8. Aggregation of Judgments. From each expert's results, the analysis staff composed probability distributions which were then aggregated to produce a single composite for each issue. Each expert was equally weighted in the composite.

9. Review by Experts. Each expert's probability distribution, as developed by the analysis staff from the expert's interview, was reviewed privately with that expert to correct any misconceptions that may have arisen. The probability distribution was then finalized, as was the composite.

5.4.3.2 NUREG/CR-5381

In NUREG/CR-5381, Philbin et al. took advantage of some of the convenient combinatorial properties of the lognormal distribution to facilitate a straightforward uncertainty analysis. NUREG/CR-5381 assessed the economic risk of cleanup costs resulting from non-reactor NRC licensee contamination incidents (see Section C.4). The calculational procedure involved three steps: estimating the frequency and cleanup cost of each accident scenario, taking their product to yield the "cleanup risk" (probabilistically-weighted cleanup cost) per scenario, and summing the scenario risks to yield the total facility risk. The uncertainty analysis paralleled these three steps.

For both the accident frequency and cleanup cost, probability distributions were selected from the available data, if possible, or by expert judgment. When using historical data to obtain frequency estimates, the assumption was made that the number of incidents for a specified scenario followed the Poisson distribution. This was deemed reasonable in light of the small number of incidents over a relatively large number of operating years and the absence of any obvious trends. The

Poisson point estimate incident rate was taken to be the historical rate, with two-sided 80% confidence bounds derived from the properties of the Poisson distribution.

When a calculational model was used to estimate the frequency, the uncertainty was based on expert judgment. Unless deemed inappropriate, the frequency distribution was taken to be lognormal with an error factor of 10. If previous analyses provided only a frequency range, the distribution was again assumed to be lognormal, with the upper and lower bounds taken as the endpoints of this range. Thus, the point estimate (median, in this case) became their geometric mean. For the cleanup costs, the point estimates were derived from historical data of calculational models. These costs were assumed to be lognormally distributed with error factors of 1.25.

Philbin et al. defended their choice of the lognormal as a "generically" representative probability distribution for several reasons. The lognormal has a minimum value of zero, a realistic limit on the minimum frequency and cost, and is skewed in a way which yields relatively wider error bounds on the upper than lower side. Thus, it produces an uncertainty band which is conservative. Also, the lognormal has two convenient combinatorial properties. The product of two lognormally distributed variables is lognormally distributed, while the sum can be approximated by another lognormal provided one variable dominates the other.

The economic risk per accident scenario was estimated by propagating the frequency and cost uncertainties through their product. When both frequency and cost were lognormally distributed, this product was also lognormal. When the frequency distribution was Poisson, it was approximated by a lognormal to simplify the calculation. Each scenario thus resulted in an economic risk which was lognormally distributed. These were summed to yield the total economic risk per facility. The individual variances were summed and the resultant total economic risk was assumed to be approximately lognormal, a reasonable assumption if it was dominated by one scenario risk. Referring to Tables C.4-C.8 in Section C.4, one can see that this assumption was generally valid for three of the five facilities (i.e., one scenario risk contributed over 50% to the total facility risk). The final results were reported as two-sided 80% confidence bounds.

5.4.3.3 NUREG/CR-4832

In NUREG/CR-4832, Payne generally followed an uncertainty/sensitivity calculational procedure similar to that employed in NUREG-1150. The major contribution was the development of a new computer code, TEMAC (Iman and Shortencarier 1986) to perform the final quantification of the accident sequence uncertainties via the Latin hypercube sampling method. The TEMAC code also calculated various risk importance measures (Vesely et al. 1983) and ranked the basic events by their contribution to mean core damage frequency.

Three importance measures were estimated in NUREG/CR-4832. The first, risk reduction importance, calculates the decrease in the total core damage frequency which could result if a single basic event's probability were set to zero (i.e., the component could not fail or the event could not occur). The second, risk increase importance, calculates the increase in the core damage frequency which could result if a single basic event's probability were set to one (i.e., the component would always fail or the event would always occur). The third, uncertainty importance, estimates the extent to which the uncertainty in the total core damage frequency depends upon the underlying uncertainty in a common contributor to a set of related basic events (e.g., a failure to actuate in all motor-operated valves). These importance measures represent a combination of sensitivity with uncertainty analyses which feature some of the better aspects of each.

5.4.4 Suggested Approach

The value-impact portion of a regulatory analysis will often require use of an existing risk assessment for the estimation of some of the attributes. If the risk assessment has an uncertainty/sensitivity analysis accompanying it, the analyst should

try to adapt it for use in the value-impact analysis. Unfortunately, this is often impractical for the standard analysis since the analyst does not have access to the computer code and numerous data and assumptions necessary to generate the resultant probability distributions.

When a detailed uncertainty/sensitivity analysis is not possible or practical, the following approach is suggested for the standard analysis. The standard analysis should attempt to include an uncertainty/sensitivity analysis approaching the level of that conducted by Philbin et al. in NUREG/CR-5381 (see Section 5.4.3.2). This analysis can be done with varying degrees of formality and rigor. First, a systematic attempt should be made to identify all of the pertinent factors (assumptions, data, models) that could affect the results. Since the number of such factors is usually very large, not all of them can be treated in detail. Nevertheless, it is useful to make a systematic effort at least to identify them. As a second step, the list of factors should be screened to select a subset for detailed examination. The screening process should concentrate on eliminating unimportant factors (for example, those that are known to contribute little to the overall uncertainty or those that have minimal effect on the bottom line results) and reducing the list to manageable size. Typically, the screening will be done on the basis of judgment and experience, but more formal methods and calculations may be appropriate in some circumstances (e.g., an abridged form of the "expert elicitation" procedure in NUREG-1150 [see Section 5.4.3.1]). The third step is to define a set of cases to be evaluated. The most common approach is to define a best estimate, establish a range of interest for each factor, and then systematically vary the factors, one or more at a time. The results are then expressed as a range (low value, best estimate, high value) which indicates the effect on the output of variations in the factors, and thus provides some insight concerning uncertainties and their effects.

Uncertainty/sensitivity analysis for the cost measures is generally simpler than that for exposures. Complex accident scenarios are not involved. Moreover, the analyst usually has a better "feel" for cost-related measures (e.g., labor rates, interest rates, and equipment costs) than for risk-related ones. Thus, such analyses require no more than the straightforward variation of interest rates, labor hours, contingency factors, etc. However, the analyst is cautioned that, while the calculational techniques may be simple, wide ranges can still result.

To assist the analyst in performing uncertainty/sensitivity analyses for the standard analysis, this Handbook provides high and low values for selected best estimates in the evaluation of certain attributes (see, for example, Section 5.7.3.1). Should the analyst have access to better estimates, they should be used. In the cases where the analyst has access to a computerized assessment, the uncertainty/sensitivity analysis results obtainable via computer can be incorporated into the standard analysis. However, it is felt that more formal uncertainty/sensitivity analyses will only be practical for regulatory analyses requiring major efforts.

Finally, automated uncertainty calculations using default distributions are a feature of the FORECAST computer code for regulatory effects cost analysis (Lopez and Sciacca 1996). Uniform, lognormal, and several user-specified probability distributions are options.

5.5 Identification of Attributes

For every value-impact analysis to be performed, those attributes that could be affected by the proposed action must be identified. Once identified, the attributes may be quantified using the techniques presented in Sections 5.6 and 5.7. Note that the subsections of this section and Section 5.7 are numbered so as to correspond to one another in their discussions of the attributes. This section introduces the most commonly used attributes. Most of the attributes presented may be quantified in monetary terms, either directly or through use of a radiation exposure-to-money conversion factor (see Section 5.7.1.2). The remaining attributes are not readily quantifiable and are treated in a more qualitative manner. However, the analyst should attempt quantitative estimation whenever possible, relying on qualitative descriptions when no quantification is feasible.

Table 5.1 is a checklist for identifying affected attributes. The analyst is encouraged to use this checklist when first determining the attributes that will need to be evaluated. For each attribute listed, a check should be made if it is affected. Each affected attribute can then be evaluated according to the instructions included in Sections 5.6 and 5.7.

Table 5.1 Checklist for identification of affected attributes

Attribute	Affected
Public Health (Accident)	☐
Public Health (Routine)	☐
Occupational Health (Accident)	☐
Occupational Health (Routine)	☐
Offsite Property	☐
Onsite Property	☐
Industry Implementation	☐
Industry Operation	☐
NRC Implementation	☐
NRC Operation	☐
Other Government	☐
General Public	☐
Improvements in Knowledge	☐
Regulatory Efficiency	☐
Antitrust Considerations	☐
Safeguards and Security Considerations	☐
Environmental Considerations	☐
Other Considerations (Specify)	☐

5.5.1 Public Health (Accident)

This attribute is a value which measures expected changes in radiation exposures to the public due to changes in accident frequencies or accident consequences associated with the proposed action. For nuclear power plants, expected changes in radiation exposure should be measured over a 50-mile radius from the plant site. The appropriate distance for other types of licensed facilities should be determined on a case-by-case basis. In most cases, the effect of the proposed action would be to decrease public exposure. A decrease in public exposure (given in person-rems) assumes a positive sign. Therefore, this decrease multiplied by the monetary conversion factor ($/person-rem) will give a positive monetary value.

It is possible that a proposed action could increase public exposure due to potential accidents. In this case, the increase in public exposure (person-rems) assumes a negative sign. When this increase is multiplied by the monetary conversion factor ($/person-rem), the resulting monetary term is interpreted as negative.

5.5.2 Public Health (Routine)

This attribute is a value which accounts for changes in radiation exposures to the public during normal facility operations (i.e., non-accident situations). It is expected that this attribute would not be affected as often in reactor regulatory analyses as in non-reactor ones. When used, this attribute would employ an actual estimate; accident probabilities are not involved.

Similar to the attribute for public health (accident), a decrease in public exposure would be positive. Therefore, the product of a decrease in exposure and the monetary conversion factor (assumed to be the same factor as that for public health [accident]) would be taken as positive. The product of an increase in public exposure and the monetary conversion factor would be taken as negative.

5.5.3 Occupational Health (Accident)

This attribute is a value which measures health effects, both immediate and long-term, associated with site workers as a result of changes in accident frequency or accident mitigation. A decrease in worker radiological exposures is taken as positive; an increase in worker exposures is considered negative.

As is the case for public exposure, the directly calculated effects of a particular action are given in person-rems. A monetary conversion factor must be used to convert the effect into dollars. Under current NRC policy the value to be used is $2000 per person-rem (see Section 5.7.1.2). This value is subject to future revision.

5.5.4 Occupational Health (Routine)

This attribute is a value which accounts for radiological exposures to workers during normal facility operations (i.e., non-accident situations). For many types of proposed actions, there will be an increase in worker exposures; sometimes this will be a one-time effect (e.g., installation or modification of equipment in a hot area), and sometimes it will be an ongoing effect (e.g., routine surveillance or maintenance of contaminated equipment or equipment in a radiation area). Some actions may involve a one-time increase with an offsetting lowering of future exposures.

This attribute represents an actual estimate of health effects; accident probabilities are not relevant. As is true of other types of exposures, a net decrease in worker exposures is taken as positive; a net increase in worker exposures is taken as negative. This exposure is also subject to the dollar per person-rem conversion factor (see Section 5.7.1.2).

5.5.5 Offsite Property

This attribute is a value which measures the expected total monetary effects on offsite property resulting from the proposed action. Changes to offsite property can take various forms, both direct (e.g., land, food, and water) and indirect (e.g., tourism). This attribute is typically the product of the change in accident frequency and the property consequences resulting from the occurrence of an accident (e.g., costs of interdiction measures such as decontamination, cleanup, and evacuation). A reduction in offsite property damage is taken as positive; an increase in offsite property damage is considered negative.

5.5.6 Onsite Property

This attribute is an impact which measures the expected monetary effects on onsite property, including replacement power (specifically for power reactors), decontamination, and refurbishment costs, from the proposed action. This attribute is typically the product of the change in accident frequency and the onsite property consequences given that an accident were to occur. A reduction in expected onsite property damage is taken as positive; an increase in onsite property damage is considered negative. Particular care should be taken in estimating dollar savings associated with this attribute because 1) values for this attribute are difficult to accurately estimate, and 2) estimated values can potentially significantly outweigh other values and impacts associated with an alternative.

5.5.7 Industry Implementation

This attribute is an impact which accounts for the projected net economic effect on the affected licensees to install or implement mandated changes. Costs will include procedural and administrative activities, equipment, labor, materials, and shutdown costs, including the cost of replacement power in the case of power reactors (see Section 5.7.7.1), as appropriate. Additional costs above the status quo are considered negative; cost savings would be considered positive.

This attribute, and the following five, reflect actual estimated costs; accident probabilities are not involved. In this regard, these attributes are measured very differently from those associated with accident-related health effects and onsite and offsite property.

5.5.8 Industry Operation

This attribute is an impact which measures the projected net economic effect due to routine and recurring activities required by the proposed action on all affected licensees. If applicable, replacement power costs (power reactors only) directly attributable to the proposed action will be included. Additional costs above the status quo are taken to be negative; cost savings are taken to be positive.

Costs falling in this category, and those associated with NRC operational considerations, generally occur over long periods of time (the facility lifetime). These costs are particularly sensitive to the discount factor used.

5.5.9 NRC Implementation

This attribute is an impact which measures the projected net economic effect on the NRC to place the proposed action into operation. Costs already incurred, including all pre-decisional activities performed by the NRC, are viewed as "sunk" costs and are not to be included. Additional costs above the status quo are taken to be negative; cost savings are taken to be positive.

The NRC may seek compensation (e.g., license fees) from affected licensees to provide needed services; any compensation received should not be subtracted from the cost to the NRC because the NRC is the entity consuming real resources (e.g., labor and capital) to meet its responsibilities. Any fees provided by licensees are viewed as transfer payments, and as such are not real costs from a societal perspective.

5.5.10 NRC Operation

This attribute is an impact which measures the projected net economic effect on the NRC after the proposed action is implemented. Additional inspection, evaluation, or enforcement activities would be examples of such costs. Additional costs above the status quo are taken to be negative; cost savings are taken to be positive. As with industry operation costs, NRC operation costs generally occur over long periods of time and are sensitive to the assumed discount factor.

Here too, the NRC may seek compensation from the licensee to provide needed services; any compensation received should not be subtracted from the cost to the NRC.

5.5.11 Other Government

This attribute is an impact which measures the net economic effect of the proposed action on the federal government (other than the NRC) and state and local governments resulting from the action's implementation or operation. Additional costs above the status quo are taken to be negative; cost savings are taken to be positive.

This attribute will be affected less often than some attributes, but can be material in certain types of actions (e.g., changes to offsite emergency planning, provision of offsite services, and new requirements affecting Agreement States). The government entities may seek compensation from the licensee to provide the needed services; any compensation received should not be subtracted from the cost to the government units.

5.5.12 General Public

This attribute is an impact which accounts for direct, out-of-pocket costs paid by members of the general public as a result of implementation or operation of a proposed action. Examples of these costs could include items such as increased cleaning costs due to dust and construction-related pollutants, property value losses due to the action, or inconveniences (e.g., testing of evacuation sirens). Increases in costs from the status quo are taken to be negative; decreases in costs from the status quo are taken as positive.

This attribute is not related to the attribute associated with offsite property losses due to accidents. The general public attribute measures real costs that will be paid due to implementation of the proposed action, subject to the uncertainties involved in estimation. These costs exclude taxes as they are simply transfer payments with no real resource commitment from a societal perspective. Any costs which are reimbursed by the applicant or licensee should be accounted for here and not duplicated under industry costs.

5.5.13 Improvements in Knowledge

This attribute accounts for the potential value of new information, especially from assessments of the safety of licensee activities. Some NRC actions have as their goal the improvement in the state of knowledge for such factors as accident probabilities or consequences, with an ultimate objective of facilitating safety enhancement or reduction in uncertainty.

Quantitative measurement of improvements in knowledge depends largely on the type of action being investigated. The value of assessments directed at a fairly narrow problem (e.g., reducing the failure rate of a particular component) may be

quantifiable in terms of safety or monetary equivalent. If this is the case, such values and impacts should be treated by other attributes and not included under this attribute. On the other hand, if potential values from the assessments are difficult to identify or are otherwise not easily quantified, then they should be addressed under this attribute.

5.5.14 Regulatory Efficiency

This attribute attempts to measure regulatory and compliance improvements resulting from the proposed action. These may include changes in industry reporting requirements and the NRC's inspection and review efforts. Achieving consistency with international standards groups may also improve regulatory efficiency for both the NRC and the groups. This attribute is qualitative in nature.

In some instances, changes in regulatory efficiency may be quantifiable, in which case the improvements should be accounted for under other attributes, such as NRC implementation or industry operation. Regulatory efficiency actions that are not quantifiable should be addressed under this attribute.

5.5.15 Antitrust Considerations

The NRC has a legislative mandate under the Atomic Energy Act to uphold U.S. antitrust laws. This qualitative attribute is included to account for antitrust considerations for those proposed actions that have the potential to allow violation of the antitrust laws.

If antitrust considerations are involved, and it is determined that antitrust laws could be violated, then the proposed action must be reconsidered and, if necessary, redefined to preclude such violation. If antitrust laws would not be violated, then evaluation of the action may proceed based on other attributes. The decision as to whether antitrust laws could be violated must rely on a criterion of reasonable likelihood, since it is difficult to anticipate the consequences of a regulatory action with absolute certainty.

5.5.16 Safeguards and Security Considerations

The NRC has a legislative mandate to maintain the common defense and security and to protect and safeguard national security information in its regulatory actions. This attribute includes such considerations.

In applying this attribute, it must be determined whether the existing level of safeguards and security is adequate and what effect the proposed action has on achieving an adequate level of safeguards and security. If the effect of the proposed action on safeguards and security is quantifiable, then this effect should be included among the quantitative attributes. Otherwise the contribution of the action will be evaluated in a qualitative way and treated under this attribute.

5.5.17 Environmental Considerations

Section 102(2) of the National Environmental Policy Act (NEPA) requires federal agencies to take various steps to enhance environmental decision-making. NRC's procedures for implementing NEPA are set forth in 10 CFR Part 51. Many of the NRC's regulatory actions are handled through use of a generic or programmatic environmental impact statement (EIS), environmental assessment (EA), or categorical exclusion. If these vehicles are used, no further consideration is required in a regulatory analysis covering the same subject matter as the environmental document, although a summary of the most salient results of the environmental analysis should be included. Otherwise, an evaluation of the action with respect to its impact on the environment is required. Such an evaluation is usually handled separately from the value-impact analysis described in this Handbook. It could be the case that mitigation or other measures resulting from the

environmental review may result in cost increases that should be accounted for in the regulatory analysis. Alternatives examined in an EIS or EA should correspond as closely as possible to the alternatives examined in the corresponding regulatory analysis.

5.5.18 Other Considerations

The above set of attributes is believed to be reasonably comprehensive for most value-impact analyses. It is recognized that any particular analysis may also identify attributes unique to itself. Any such attributes should be appropriately described and factored into the analysis.

5.6 Quantification of Change in Accident Frequency

As expressed in this Handbook, the term "accident" should be viewed generally as an unplanned occurrence which potentially releases radioactive materials, applicable to both power reactor and non-reactor facilities. Discussions in this section assume familiarity with the concepts of risk as related to the nuclear industry, as well as knowledge of event- and fault-tree terminology. The reader unfamiliar with these concepts or in need of review is directed to existing risk assessments or such standard references as the PRA Procedures Guide (NRC 1983a) and the Fault Tree Handbook (Vesely et al. 1981). The NRC formally endorsed the use of PRA methods in nuclear regulatory activities with its issuance of a Final Policy Statement in 1995 (NRC 1995b). The Policy Statement includes four elements, the first of which states that

> The use of PRA technology should be increased in all regulatory matters to the extent supported by the state-of-the-art in PRA methods and data and in a manner that complements the NRC's deterministic approach and supports the NRC's traditional defense-in-depth philosophy.

SECY-95-079 contains a status update of NRC's PRA implementation plan. SECY-95-280 contains a framework for applying PRA in reactor regulation. As noted in Section 3, as this version of the Handbook was being completed a number of NRC staff activities were underway which relate to PRA use in NRC regulatory activities. These include

- completion of the staff's review of licensee-submitted IPEs
- evaluation of these IPEs for potential use in other regulatory activities, documented in a draft report to be published as NUREG-1560 (NRC 1996b)
- development of guidance on the use of PRA in plant-specific requests for license changes, including regulatory guides for use by licensees in preparing applications for changes and standard review plans for use by the NRC staff in reviewing proposed changes.

These activities should result in a more consistent and technically justified application of PRA in NRC's regulatory process. In particular, draft NUREG-1560 contains a detailed and explicit description of acceptable attributes of a quality PRA. The activities, along with staff work planned for FY 1997 to initiate improvements to the economic models now used in NRC's offsite consequence analyses (e.g., the MACCS code), should have a significant impact on the PRA-related portions of this Handbook. Consequently, the discussion in this Handbook on the use of PRA and offsite consequence estimates should be viewed as interim guidance that may be relied upon until the Handbook is updated to accommodate the NRC's new position on these regulatory issues. The staff expect to initiate this update as the preceding PRA guidance nears completion.

Estimates of the change in accident frequency resulting from a proposed NRC action are based on the effects of the action on appropriate parameters in the accident "equation."[2] Examples of these parameters might be system or component failure probabilities, including those for the facility's containment structure. The estimation process involves two steps: 1) identification of the parameters affected by a proposed NRC action (see Section 5.6.1); and 2) estimation of the values of these affected parameters before and after the implementation of the action (see Section 5.6.2).

The parameter values are substituted in the accident equation to yield the base- and adjusted-case accident sequence frequencies. The sum of their differences is the reduction in accident frequency due to the proposed NRC action.

The process can be viewed as follows. The frequency for accident sequence ij is[3]

$$F_{ij} = \sum_k M_{ij}k$$

where M_{ijk} = the frequency of minimal cut set k for accident sequence i initiated by event j.

A minimal cut set represents a unique combination of occurrences at lower levels in a structural hierarchy (e.g., component failures in power reactor systems) which produces an overall occurrence (e.g., reactor core damage) at a higher level. It takes the form of a product of these lower level occurrences. The affected parameters comprise one or more of the multiplicative terms in the minimal cut sets. Thus, the reduction in accident sequence ij's frequency is

$$\begin{aligned}\Delta F_{ij} &= \left[(F_{ij})_{base} - (F_{ij})_{adjusted}\right] \\ &= \sum_k \left[(M_{ijk})_{base} - (M_{ijk})_{adjusted}\right]\end{aligned}$$

The reduction in accident frequency is the sum of the reductions for each affected accident sequence:

$$\begin{aligned}\Delta F &= \sum_i \sum_j \Delta F_{ij} \\ &= \sum_i \sum_j \sum_k \left[(M_{ijk})_{base} - (M_{ijk})_{adjusted}\right]\end{aligned}$$

Note that a negative reduction represents an increase in accident frequency from the base to the adjusted case (i.e., an increase resulting from the proposed action).

5.6.1 Identification of Affected Parameters

The level of effort required to identify the parameters affected by implementation of an action depends primarily on the availability of one or more existing power reactor or non-reactor risk/reliability studies which include those parameters. For nuclear power plants, Table 5.2 provides a list of risk studies. The following characteristics are included, as available:

- plant type (BWR/PWR and vendor)
- year of commercial operation
- level of risk/reliability analysis[4]
- external events inclusion (yes/no)
- program under which performed (if any)
- report reference

Table 5.2 Nuclear power plants risk assessments

Plant	Type	Year Commercial	Analysis Level[4]	External Events?	Program	References
Brunswick-1/2	GE BWRs	1977/75	1	No	Industry Reviewed	April 1988 NUREG/CR-5465 November 1989
Grand Gulf-1	GE BWR	1983	3	No	NUREG-1150	NUREG/CR-4550, V.6, September 1989 Brown et al. 1990
Indian Point-2	W PWR	1974	3	Yes	Industry NRC Report Reviewed Reviewed	PASNY 1982 NUREG/CR-1410 and 1411, August 1980 NUREG/CR-2934, December 1982 NUREG/CR-0850, November 1981
LaSalle County-1	GE BWR	1984	3	Yes	Industry RMIEP, NRC	Call et al. 1985 NUREG/CR-4832, 1992 and 1993
Peach Bottom-2 (Also train level)	GE BWR	1974	3	Yes	NUREG-1150	NUREG/CR-4550, V.4, August 1989 Payne et al. 1990
Sequoyah-1	W PWR	1981	3	No	NUREG-1150	NUREG/CR-4550, V.5, April 1990 Gregory et al. 1990
Surry-1	W PWR	1972	3	Yes	NUREG-1150	NUREG/CR-4550, V3, April 1990 Breeding et al. 1990
Zion-1	W PWR	1973	3	No	NUREG-1150	NUREG/CR-4550, V.7, May 1990 Park et al. 1990
AP-600	W PWR	*			*	Reviewed by NRC 1993
CESAR System 80+	CE PWR	*			*	Reviewed by NRC 1992

* Advanced reactor designs

In addition to the studies shown in Table 5.2, IPE reports covering vulnerabilities to severe accidents and IPEEE reports can serve as additional references. Generic Letter 88-20, issued in November 1988, required all holders of nuclear power plant operating licenses and construction permits to prepare IPE reports. Supplement 4 to General Letter 88-20, issued in July 1991, required these licensees to prepare IPEEE reports. IPE and IPEEE reports are available through the NRC

Public Document Room. The status of the IPE and IPEEE programs is discussed in SECY-96-51 (NRC 1996a) and draft NUREG-1560 (NRC 1996b). NRC staff prepare an evaluation report documenting staff conclusions on each IPE and IPEEE report submitted to NRC (NRC 1996a).

When evaluating generic power reactor issues, where many types of plants may be affected, the five risk assessments performed as part of the NUREG-1150 program (NRC 1991) are particularly useful. One of the primary objectives of that program was to "provide a set of (risk assessment) models and results that can support the ongoing prioritization of potential safety issues and related research" (NRC 1991). As such, these provide a valuable resource for both quantitative and qualitative information on a set of five commercial nuclear power plants of different design.

Several computer codes containing reactor risk assessment information are also available which can be used to support regulatory analyses. Particularly well suited to this type of analysis is the System Analysis and Risk Assessment (SARA) code (Stewart et al. 1989), which contains the dominant accident sequences and cut sets for each of the NUREG-1150 plants. The Integrated Reliability and Risk Analysis System (IRRAS [Russell and Sattison 1988]) is an integrated risk assessment software tool. Using this code, the analyst can create and analyze custom-made fault trees and event trees using a microcomputer.

In addition to these assessments of total plant risk/reliability, some studies focus on specific systems, accident initiators, or accident sequences. For certain actions, such specialized studies may be more appropriate for identifying affected parameters than the various plant-wide assessments.

While risk/reliability assessments have been performed for selected non-reactor facilities, these are generally much less comprehensive than their power reactor counterparts. Available data for accident frequencies at non-reactor facilities have been assembled into composite lists in Section C.2.1.1. They may be used as presented to identify affected parameters in a non-reactor accident equation, or as guides to the more detailed assessments from which they have been extracted.

Additional information sources for non-reactor facility accidents may be found among the numerous Safety Analysis Reports conducted for U.S. Department of Energy (DOE) fuel-cycle facilities. For example, the DOE's Savannah River Site has roughly 30 such reports for fuel fabrication, chemical separation, research laboratories, analytical laboratories, waste handling, irradiated fuel storage, and radioactive material transportation.

At the simplest level, the standard analysis assumes that appropriate risk/reliability studies from which the affected parameters are easily identified are readily available. For example, all currently available reactor risk/reliability studies include accident sequences involving loss of emergency AC power. If the minimal cut sets used in the analytical modeling of these sequences contain parameters appropriate to an action related to loss of emergency AC power, then these risk/reliability studies (supplemented by any new studies published subsequent to this Handbook) would be appropriate for use in the standard analysis. The affected parameters can be readily identified, and the estimation of changes in accident frequency can proceed to the next step (parameter value estimation). Similarly, a major fire accident scenario has been investigated for most non-reactor facilities (see Section C.2.1.1). If a proposed action relates to reducing the fire potential at one or more types of non-reactor facilities, then these risk/reliability studies (supplemented by any new studies published subsequent to this Handbook) would be appropriate for use in the standard analysis. A useful source of data for non-standard events at non-reactor facilities is that maintained at DOE's Savannah River Site (Durant et al. 1988).

At a more detailed level, but still within the scope of a standard analysis, the identification of affected parameters may require more than direct use of existing risk/reliability studies. Existing studies may need to be modified without sacrificing their analytical consistency. The effort may involve performing an expanded or independent analysis of the accident sequences associated with an action, using previous studies only as a guideline, or several existing risk/reliability studies may be combined to form some "composite" study more applicable to a generic action.

Beyond the standard analysis lies the major effort, where identification of affected parameters requires the type of analysis associated with a much greater level of detail and, most likely, a significantly expanded scope. Typical of major efforts are NRC programs related to unresolved power reactor safety issues. Such programs tend to be multi-year tasks conducted by one or more NRC contractors. Clearly, the expected degree of detail and quality of analysis made possible through a major effort to identify affected parameters should be "state-of-the-art," significantly better than could be obtained from the standard effort.

5.6.2 Estimation of Affected Parameter Values

Presumably, the analyst has identified the parameters affected by action implementation. (If not, it is still possible to estimate changes in accident frequencies through expert opinion, discussed as part of the standard analysis.) The next step is to estimate the base- and adjusted-case frequencies/likelihoods of the affected parameters, which are then used to estimate the base- and adjusted-case total accident sequence frequencies. The sum of the differences between the base and adjusted cases is the reduction in accident frequency resulting from the action (a negative reduction is an increase).

At the simplest level, the standard analysis assumes that frequencies/likelihoods for affected parameters are readily available or can be derived easily. The most convenient sources of data are the existing risk/reliability assessments; these provide parameter frequencies/likelihoods in forms appropriate for accident frequency calculations (e.g., frequencies for initiators and unavailabilities or demand failure probabilities for subsequent system/component failures).

For power reactors, NUREG/CR-4639 (Gertman et al. 1988) provides a Nuclear Computerized Library for Assessing Reactor Reliability (NUCLARR). Other data sources are available, including the Nuclear Plant Reliability Data System (NPRDS);[5] and the LERs. These may or may not report data in the forms directly applicable as parameter frequencies/likelihoods. For non-reactor facilities, failure rate data for non-reactor components are available from Dexter and Perkins (1982), Wilkinson et al. (1991), and Blanton and Eide (1993).

The derivation of frequencies/likelihoods from available data should require no more than standard statistical analysis techniques. In addition to statistics textbooks, other sources provide methods for deriving failure rates and probabilities more specifically for use in risk/reliability analyses. McCormick (1981) is a standard reference of this type. If derivation requires more detailed modeling, the analyst should consider the possibility of estimating frequencies/likelihoods through expert opinion. A formalized procedure like the Delphi technique may yield adequate estimates (Dalkey and Helmer 1963; Humphress and Lewis 1982). Also recommended are the "Formal Procedures for Elicitation of Expert Judgment," employed in the NUREG-1150 analyses (NRC 1991) and reviewed in Section 5.4.3.1.

Earlier, it was mentioned that an analyst unable to identify affected parameters for an action can still estimate changes in accident frequency. This removes the need for propagating the effect of change in individual risk parameters through the risk equation to obtain the accident frequency. It involves expert judgment of changes in accident frequency based on the total core-melt frequency of a representative nuclear power plant (although less applicable to the total radioactive release frequency for a non-reactor facility, see below). A formalized procedure like the Delphi method could be used to provide an overall consensus from expert estimates of percent changes in total accident frequency due to action implementation. However, caution is advised, since direct estimation, as compared to more detailed calculations, can result in inaccurate estimates.

Because of the nature of the radioactive material, its multiple locations, and near inconceivability of an accident capable of releasing the total inventory (except, possibly, an "external event"), estimating the frequency of total radioactive release from a non-reactor facility by expert judgment is difficult. It would be more realistic to use the experts to estimate frequencies for individual release locations and initiators.

Expert opinion may also play a prime role in estimating adjusted-case parameter values. Typically, existing data are applied to yield base-case values, leaving only engineering judgment for arriving at adjusted-case values. Consensus can reduce uncertainties, and the magnitudes of parameter values normally encountered in risk/reliability studies can serve as rough guidelines.

At a more detailed level, but still within the scope of a standard analysis, the analyst would be expected to conduct reasonably detailed statistical modeling or extensive data compilation when frequencies/likelihoods for affected parameters are not readily available. While existing risk/reliability assessments may provide some data for use in statistical modeling, the level of detail required would normally be greater than they could provide. Statistical modeling may use stochastic simulation methods and may also involve relatively basic statistical analysis techniques using extensive data.

Beyond the standard analysis lies the major effort, where estimation of affected parameter values requires much greater detail and a significantly expanded scope. When frequencies/likelihoods are unavailable for affected parameters, a major analytical effort is required. The analyst may need to develop specialized statistical models or possibly seek experimental data. On the other hand, data may be so abundant as to require extensive statistical analysis to produce a more workable base. Typically, both detailed statistical modeling and extensive data compilation will be required as part of a major effort. "State-of-the-art" data analysis techniques should be employed.

Estimation of adjusted-case affected parameter values should involve more than just expert opinion for a major effort. Engineering judgment can be incorporated into an overall framework, but this framework should be analytical, not judgmental. If the need for expert opinion proves inevitable, only a rigorous application of the Delphi or other such methods will suffice for a major effort.

5.6.3 Change in Accident Frequency

The change in accident frequency is a key factor for several of the value-impact analysis attributes. Having identified base- and adjusted-case values for the parameters in the plant risk equation affected by the proposed regulatory action, the analyst proceeds to calculate the reduction in accident frequency as the sum of the differences between the base- and adjusted-case values for all affected accident sequences. Section 5.6 presented this calculation in the format of an equation. Reduction in accident frequency is algebraically positive; increase is negative (viewed as a negative reduction).

An error factor[6] of at least five (typical for a 90% confidence level) on the best estimate of the reduction in total accident frequency may be used to estimate high and low values for the sensitivity calculations in a standard analysis for power reactor facilities. If no better information is available, higher error factors (at least 10) can be assumed for non-reactor standard analyses. If better values are known (e.g., error factors from the specific risk assessment being used), they should be employed. Rigorously derived error factors via computer simulation would be appropriate for a major analysis beyond the standard scope.

NUREG/CR-2800 (Andrews et al. 1983) provides a useful conceptual discussion on the calculation of change in core-melt accident frequency for power reactors, along with detailed examples. Such calculations would be typical of what is expected to be appropriate in the standard value-impact analysis portion of a regulatory analysis.

The FORECAST computer code for regulatory effects cost analysis (Lopez and Sciacca 1996) allows input for the change in accident frequency.

5.7 Quantification of Attributes

The following sections provide specific guidance in estimating the values of each attribute. However, before looking at specific attributes, there are several generic concepts that need to be explored.

Value and impact estimates are performed relative to a baseline case, which is typically the no-action alternative. In establishing the baseline case, an assumption should be made that all existing NRC and Agreement State requirements and written licensee commitments are already being implemented and that values and impacts associated with these requirements are not part of the incremental estimates prepared for the regulatory analysis. Similarly, the effects of formally proposed concurrent regulatory actions that are viewed as having a high likelihood of implementation need to be incorporated into the baseline before calculating the incremental consequences of the regulatory action under consideration.

The treatment of voluntary incentives on the part of industry also has important implications on the baseline and therefore, the incremental consequences of the proposed action. Section 4.3 of the NRC Guidelines discusses the treatment of voluntary activities by affected licensees when establishing a baseline reference. Basically, analysts should give no credit for voluntary actions in making base case estimates. However, for completeness and sensitivity analysis purposes, the analyst should also display results with credit being given for voluntary actions by licensees.

Section 4.3 of the NRC Guidelines requires the use of best estimates. Often these are evaluated in terms of the mean or "expected value," the product of the probability of some event occurring and the consequences which would occur assuming the event actually happens. Sometimes, measures other than the expected value may be appropriate, such as the median or even a point estimate. However, the expected value is generally preferred.

There are four attributes used in value-impact analysis for which expected value is normally calculated: public health (accident), occupational health (accident), offsite property, and onsite property. All four of these attributes usually rely on estimation of the change in probability of occurrence of an accident as a result of implementation of the proposed action. (Changes in the consequence of the accident [i.e., dose or cost] would also affect these attributes.)

Four attributes involve radiation exposure: 1) public health (accident), 2) public health (routine), 3) occupational health (accident), and 4) occupational health (routine). In quantifying each measure, the analyst should assess the reduction (or risk averted) relative to the existing condition. For accident-related exposures, the measure will be probabilistically weighted (i.e., the potential consequence is multiplied by its probability of occurrence).[7] The non-accident terms (e.g., routine occupational exposure) are given in terms of annual expected effect. Both types of terms would be integrated over the lifetime of the affected facilities to show the total effect. Each of the attributes involving radiation exposure can be characterized in terms of person-rems, either averted by or resulting from implementation of the proposed action.

The four attributes associated with radiation exposure require a person-rem-to-dollars conversion factor to be expressed monetarily (see Section 5.7.1.2). The remaining quantitative attributes are normally quantified monetarily in a direct manner. When quantified monetarily, attributes should be discounted to present value (see Section B.2 for a discussion of discounting techniques). This operation involves an assumption regarding the remaining lifetime of a facility. If appropriate, the effect of license renewal should be included in the facility lifetime estimate (see Section 4.3 of the Guidelines). The total dollar figures capture both the number of facilities involved (in the case of generic rulemaking) and the economic lifetime of the affected facilities.

Based on OMB's guidance in Circular A-94, Section 4.3.3 of the Guidelines requires that a 7% real (i.e., inflation-adjusted) discount rate be used for a best estimate. For sensitivity analysis, the Guidelines recommend a 3% discount rate. However, for certain regulatory actions involving a timeframe exceeding 100 years (e.g., decommissioning and waste disposal issues), Section 4.3.3 of the Guidelines stipulates the following:

> ...[T]he regulatory analysis should display results to the decision-maker in two ways. First, on a present worth basis using a 3 percent real rate, and second, by displaying the values and impacts at the time in which they are incurred with no present worth conversion. In this latter case, no calculation of the resulting net value... should be made.

"Qualitative" attributes do not lend themselves to quantification. To the degree to which the considerations associated with these attributes can be quantified, they should be; the quantification should be documented, preferably under one or more of the quantitative attributes. However, if the consideration does not lend itself to any level of quantification, then its treatment should take the form of a qualitative evaluation in which the analyst describes as clearly and concisely as possible the precise effect of the proposed action.

To estimate values for the accident-related attributes in a regulatory analysis, the analyst ideally can draw from detailed risk/reliability assessments or statistically-based analyses. Numerous sources exist for power reactor applications (e.g., see Section 5.6). To a lesser extent, Sections C.3-C.6 and C.10 provide similar data for non-reactor applications. Most regulatory analyses for power reactor facilities are based on detailed risk/reliability assessments or equivalent statistically based analyses.

However, the analyst will sometimes find limited factual data or information sufficiently applicable only for providing a quantitative perspective, possibly requiring extrapolation. These may often involve non-reactor licensees since detailed risk/reliability assessments and/or statistically-based analyses are less available than for power reactor licensees. Two examples illustrate this type of quantitative evaluation.

In 1992, the NRC performed a regulatory analysis for the adoption of a proposed rule (57 FR 56287; November 27, 1992) concerning air gaps to avert radiation exposure resulting from NRC-licensed users of industrial gauges. The NRC found insufficient data to determine the averted radiation exposure. To estimate the reduction in radiation exposure should the rule be adopted, the NRC proceeded as follows. The NRC assumed a source strength of one curie for a device with a large air gap, which produces 1.3 rem/hr at a distance of 20 inches from a Cs-137 source. Assuming half this dose rate would be produced, on average, in the air gap, and that a worker is within the air gap for four hours annually, the NRC estimated the worker would receive 2.6 rem/yr. The NRC estimated that adopting the proposed air-gap rule would be cost-effective if 347 person-rem/yr were saved. At the estimated average savings of 2.6 person-rem/yr for each gauge licensee, incidents involving at least 133 gauges would have to be eliminated. Given the roughly 3,000 gauges currently used by these licensees, the proposed rule would only have to reduce the incident rate by roughly 4%, a value the NRC believed to be easily achievable. As a result, the NRC staff recommended adoption of the air-gap rule.

In 1992, the NRC responded to a petition from General Electric (GE) and Westinghouse for a rulemaking to allow self-guarantee as an additional means for compliance with decommissioning regulations. An NRC contractor estimated the default risks of various types of financial assurance mechanisms, including the proposed self-guarantee. The contractor had to collect data on failure rates both of firms of different sizes and of banks, savings and loans, and other suppliers of financial assurance mechanisms. The contractor estimated a default risk of 0.13% annually for the GE-Westinghouse proposal, with a maximum default risk of only 0.055% annually for third-party guarantors, specifically a small savings and loan issuing a letter of credit. Based on these findings, the NRC initiated a proposed rulemaking which would allow self-guarantee for certain licensees. The final rule was issued December 29, 1993 (58 FR 68726).

Additional examples of this more limited type of quantitative approach to estimation can be found in Sections C.8 and C.9.

5.7.1 Public Health (Accident)

Evaluating the effect on public health from a change in accident frequency due to proposed regulatory actions is a multi-step process. For each affected facility, the analyst first estimates the change in the public health (accident) risk associated with the action and reports this as person-rem avoided exposure. Reduction in public risk is algebraically positive; increase is negative (viewed as a negative reduction). Next the analyst converts person-rems to their monetary equivalent (dollars) and discounts to present value. Finally, the analyst totals the change in public health (accident) as expressed in discounted dollars over all affected facilities.

The steps are as follows:

1. Estimate reduction in accident frequency per facility (see Section 5.6).

2. Estimate reduction in public health (accident) risk per facility (see Section 5.7.1.1).

3. Convert value of public health (accident) risk avoided (person-rems) per facility to monetary equivalent (dollars) via monetary valuation of health effects (see Section 5.7.1.2).

$$Z_{PHA} = RD_{PA}$$

where Z_{PHA} = monetary value of public health (accident) risk avoided per facility-year before discounting ($/facility-year)
D_{PA} = avoided public dose per facility-year (person-rem/facility-year)
R = monetary equivalent of unit dose ($/person-rem).

4. Discount to present value per facility (dollars) (see Section 5.7.1.3).

5. Total over all affected facilities (dollars).

$$V_{PHA} = NW_{PHA}$$

where V_{PHA} = discounted monetary value of public health (accident) risk avoided for all affected facilities ($)
W_{PHA} = monetary value of public health (accident) risk avoided per facility after discounting ($/facility)
N = number of affected facilities.

If individual facility values rather than generic values are used, the formulations can be replaced with

$$V_{PHA} = \sum_i N_i W_{PHA_i}$$

where i = facility (or group of facilities) index.

5.7.1.1 Estimation of Accident-Related Health Effects

The results of the formulations given in Section 5.6 are reductions in accident frequency. These form the first portion of the public health (accident) risk estimate. For the standard analysis, the analyst would employ data developed in existing risk studies which include offsite effects, if possible. Such studies provide population dose factors that can be applied to accident release categories to yield dose estimates as follows:

$$\begin{array}{c}\text{Avoided Public}\\ \text{Dose } [D_{PA}]\\ \text{(person-rem/facility-yr)}\end{array} = \sum_{\substack{\text{Release}\\ \text{Categories}}} \left[\begin{array}{c}\text{Reduction in Release}\\ \text{Category Frequency}\\ \text{(events/facility-yr)}\end{array}\right] \times \left[\begin{array}{c}\text{Population Dose}\\ \text{Factor for Release}\\ \text{Category}\\ \text{(person-rem/event)}\end{array}\right]$$

If the risk assessment being used by the analyst to estimate public health (accident) employs its own unique accident release categories with corresponding population dose factors, then these should be used. Otherwise, population dose factors should be based on Table 5.3 (see Appendix B.4 for development of this table). For non-reactor accidents, population dose factors for accident scenarios at selected facilities have been assembled into composite lists in Section C.2.1.2. An error factor of at least five is considered appropriate for use in sensitivity studies.

Table 5.3 Expected population doses for power reactor release categories

Plant Type	Release Category	Accident Progression Characteristics						Population Dose	
		CF Time	PDS	SP Bypass	RB Bypass	CCI	CF Mode	Total (Person-Rem)	% Long Term
PWR	RSUR1	CFatVB	LOSP	Not Applicable		Dry	Rupture	6.15E+6	63
	RSUR2	Late CF					Leak	2.30E+6	88
	RSUR3	No CF					No CF	2.50E+2	67
	RSUR4	Bypass	Bypass				Bypass	4.29E+6	80
	RZ1	CFatVB	LOCA			Shallow	Rupture	5.77E+6	65
	RZ2	LateCF				Flooded	Leak	1.31E+5	38
	RZ3	No CF					No CF	3.31E+2	67
	RZ4	Bypass	Bypass			Dry	Bypass	4.80E+6	76
	RSEQ1	CFdurCD	LOSP			Dry	CatRup	1.31E+7	50
	RSEQ2	CFatVB						5.77E+6	56
	RSEQ3	Late CF	LOCA			Flooded	Rupture	1.33E+5	42
	RSEQ4	No CF					No CF	4.06E+2	71
	RSEQ5	Bypass	Bypass			Dry	Bypass	4.94E+6	76
BWR	RPB1	CFatVB	LOSP	Early/Late	Sm/None	Dry	DWMth	5.25E+6	80
	RPB2		ATWS					5.32E+6	
	RPB3	CFdurCD		None	Large		WWvent	3.26E+6	84
	RPB4	Late CF	LOSP	Early/Late			DWrup	1.13E+6	92
	RPB5	No CF		None	Sm/None	Shallow	No CF	8.27E+3	62
	RPB6	CFatVB		Early/Late	Large	Dry	DWMth	1.11E+7	
	RLAS1	CFdurCD	Tran	Early/Late	Sm/None	Dry	WWawrup	5.25E+6	80
	RLAS2	CFatVB				Shallow	WWaw-lk	3.21E+6	81
	RLAS3						DWrup	4.66E+6	82
	RLAS4	CFdurCD				Dry	WWvent	5.92E+6	73
	RLAS5	Late CF			Sm/None	Shallow		1.75E+6	82
	RLAS6				Large	Dry	CF-Ped	4.18E+6	73

Table 5.3 (Continued)

Plant Type	Release Category	Accident Progression Characteristics						Population Dose	
		CF Time	PDS	SP Bypass	RB Bypass	CCI	CF Mode	Total (Person-Rem)	% Long Term
BWR	RLAS7	No CF	Tran	None	Sm/None	Shallow	No CF	3.33E+2	65
	RGG1	CFatVB	STSB	Early/Late	Large	Flooded	Rupture	5.77E+6	75
	RGG2	CFdurCD		None				2.74E+6	90
	RGG3	Late CF		Late Only				2.35E+6	80
	RGG4	CFdurCD		Early/Late		No CCI		2.70E+6	93
	RGG5	No CF		None			No CF	1.18E+2	59

Note: The initials RSUR, RZ, and RSEQ refer to Surry, Zion, and Sequoyah release categories respectively followed by the release category number.
The initials RPB, RLAS, and RGG refer to Peach Bottom, LaSalle, and Grand Gulf release categories respectively followed by the release category number.

Key:

CF Time = Containment failure (CF time)
- CFatVB = CF at vessel breach (VB)
- CFdurCD = CF during core damage (before VB, if it occurs)
- LateCF = CF during core concentration interactions (CCI)
- No CF = no CF
- Bypass = bypass of containment (usually throughout duration of accident)

PDS = Plant damage state (PDS)
- LOSP = loss of offsite power
- LOCA = loss of coolant accident
- Bypass = bypass of containment (interfacing systems LOCA or steam generator tube rupture)
- ATWS = anticipated transient without scram
- Tran = Transient
- STSB = short-term station blackout

CCI = Type of molten core concrete interactions (CCI)
- Dry = CCI occurs in a dry cavity
- Shallow = CCI occurs in a wet cavity (nominally 5 ft. of water)
- Flooded = CCI occurs in a deeply flooded cavity (nominally 14 ft. of water)
- No CCI = There is no CCI (the debris bed is coolable with replenishable water or no VB)

CF Mode = Containment failure mode
- CatRup = Catastrophic rupture failure
- Rupture = Rupture failure of containment
- Bypass = bypass of containment
- Leak = Leak failure of containment
- No CF = no CF
- WWawrup = Rupture above the wetwell water level
- WWaw-lk = Leak above the wetwell water level
- DWRup = Rupture in the drywell
- WWvent = Venting of the wetwell
- CF-Ped = Rupture in the drywell wall, caused by late failure of the reactor pedestal
- DWMth = Melt-through of the drywell wall by direct contact of the molten core

SP Bypass = Suppression pool (SP) bypass
- Early/Late = SP is bypassed from the time of VB throughout the accident
- None = SP is never bypassed
- Late Only = SP is only bypassed late in the accident (during CCI)

RB Bypass = Reactor building (RB) bypass
- Sm/None = Nominal or small leakage from the RB
- Large = Large leakage from the RB or bypass of the RB (for Grand Gulf, all containment failures were assumed to be above the RB)

Should the nature of the issue require that the reduction in accident frequency be expressed as a single number, a single population dose factor, preferably one that has been probabilistically weighted to reflect those for all accident release categories, is generally needed. For this approach, the calculation of avoided public dose becomes:

$$\begin{matrix}\text{Avoided Public} \\ \text{Dose } [D_{PA}] \\ \text{(person-rem/facility-yr)}\end{matrix} = \begin{bmatrix}\text{Reduction in} \\ \text{Accident Frequency} \\ \text{(events/facility-yr)}\end{bmatrix} \times \begin{bmatrix}\text{Population Dose} \\ \text{Factor} \\ \text{(person-rem/event)}\end{bmatrix}$$

Mubayi et al. (1995) have calculated population doses weighted by the frequencies of the accident release categories for the five power reactors analyzed in NUREG-1150 (NRC 1991). These are listed in Table 5.4 based on Version 1.5.11.1 of the MACCS computer code (Chanin et al. 1993). The population doses have been calculated as the sum of those for emergency response and long-term protective action, defined as follows:

- For early consequences, an effective emergency response plan consisted of evacuation of all but 0.5% of the population within a ten-mile radius at a specified speed and delay time following notification of the emergency.

- For long-term relocation and banning of agricultural products, the interdiction criterion was 4 rem to an individual over five years (2 rem in year one, followed by 0.5 rem each successive year).

For regulatory analyses involving nuclear power plants, doses should be estimated over a 50-mile radius from the plant site (see Guidelines Section 4.3.1). Doses for other distances can be considered in sensitivity analyses or special cases, and are available in Mubayi et al. (1995).

It is possible that the proposed action will affect public health (accident) through a mitigation of consequences instead of (or as well as) through a reduction in accident frequency.[8] Should this be the case, the previous general formulations are replaced with the following:

$$\text{Avoided Public Dose} = \sum_{\substack{\text{Release}\\\text{Categories}}} \left[\begin{matrix}\text{Release Category}\\\text{Frequency}\end{matrix} \times \begin{matrix}\text{Category Population}\\\text{Dose Factor}\end{matrix}\right]_{\text{Status Quo}} - \sum_{\substack{\text{Release}\\\text{Categories}}} \left[\begin{matrix}\text{Release Category}\\\text{Frequency}\end{matrix} \times \begin{matrix}\text{Category Population}\\\text{Dose Factor}\end{matrix}\right]_{\text{After Action}}$$

or

$$\text{Avoided Public Dose} = \left[\begin{matrix}\text{Accident}\\\text{Frequency}\end{matrix} \times \begin{matrix}\text{Population Dose}\\\text{Factor}\end{matrix}\right]_{\text{Status Quo}} - \left[\begin{matrix}\text{Accident}\\\text{Frequency}\end{matrix} \times \begin{matrix}\text{Population Dose}\\\text{Factor}\end{matrix}\right]_{\text{After Action}}$$

Table 5.4 Weighted population dose factors for the five NUREG-1150 power reactors

Reactor	Type	Person-rem Within 50 miles from the Plant
Zion	**PWR**	1.95E+5
Surry	**PWR**	1.60E+5
Sequoyah	**PWR**	2.46E+5
Peach Bottom	**BWR**	2.00E+6
Grand Gulf	**BWR**	1.93E+5
Average		1.99E+5

Public risks from non-reactor accidents have been assembled into composite lists in Section C.2.1.3. These represent the products of accident frequencies and population dose factors, whether calculated as release category summations or single frequency and dose numbers.

Beyond the standard analysis lies the major effort. In parallel with the more involved effort to identify and quantify affected parameters in appropriate accident sequences (see Section 5.6) would be an equivalent effort to quantify population dose factors and possibly even specific health effects. Such effort at the "consequence end" of the risk calculation would increase the likelihood of obtaining representative results. Non-representative results can arise through the use of inappropriate or inapplicable dose calculations just as readily as through inappropriate logic models and failure data.

Several computer codes exist for estimation of population dose. Most for reactor applications have been combined under MACCS (Chanin et al. 1990, 1993; Summers et al. 1995a,b). Three codes for non-reactor applications are GENII (Napier et al. 1988), CAP-88 (Beres 1990), and COMPLY (EPA 1989). There have also been recent upgrades to MELCOR itself for modeling severe accidents in light water reactors, including estimation of severe accident source terms and their sensitivities/uncertainties (Summers et al. 1995a,b).

The GENII code package determines individual and population radiation doses on an annual basis, as dose commitments, and as accumulated from acute or chronic radionuclide releases to air or water. It has an additional capability to predict very-long-term doses from waste management operations for periods up to 10,000 years.

The CAP-88 code package is generally required for use at DOE facilities to demonstrate compliance with radionuclide air emission standards where the maximally exposed offsite individual is more than 3 km from the source [40 CFR 61.93(a)]. The code contains modules to estimate dose and risk to individuals and populations from radionuclides released to the air. It comes with a library of radionuclide-specific data and provides the most flexibility of the EPA air compliance codes in terms of ability to input site-specific data. A personal computer version of the CAP-88 code package (Parks 1992) was released in March 1992 under the name CAP88-PC and is also approved for demonstrating compliance at DOE facilities.

The COMPLY code is a screening model intended primarily for use by NRC licensees and federal agencies other than DOE facilities. It is approved for use by DOE facilities where the maximally exposed offsite individual is less than 3 km from the emissions source [40 CFR 61.93(a)]. The code consists of four screening levels, each of which requires increasingly detailed site-specific data to produce a more realistic (and less conservative) dose estimate. COMPLY runs on a personal computer and does not require extensive site-specific data.

5.7.1.2 Monetary Valuation of Accident-Related Health Effects

Section 4.3.3 of the Guidelines states that the conversion factor to be used to establish the monetary value of a unit of radiation exposure is $2000 per person-rem. This value will be subject to periodic NRC review. The basis for selection of the $2000 per person-rem value is set out in NUREG-1530 (NRC 1995d). The $2000 per person-rem value is to be used for routine and accidental emissions for both public and occupational exposure. Unlike past NRC practice, offsite property consequences are to be separately valued and are not part of the $2000 per person-rem value. Monetary conversion of radiation exposure using the $2000 per person-rem value is to be performed for the year in which the exposure occurs and then discounted to present value for purposes of evaluating values and impacts.

5.7.1.3 Discounting Monetized Value of Accident-Related Health Effects

The present value for accident-related health effects in their monetized form can be calculated as follows:

$$W_{PHA} = C \times Z_{PHA}$$

where W_{PHA} = monetary value of public health (accident) risk avoided per facility after discounting ($/facility)
C = $[\exp(-rt_i) - \exp(-rt_f)]/r$
t_f = years remaining until end of facility life
t_i = years before facility begins operating
r = real discount rate (as fraction, not percent)
Z_{PHA} = monetary value of public health (accident) risk avoided per facility-year before discounting ($/facility-year).

If a facility is already operating, t_i will be zero and the equation for C simplifies to

$$C = \left[1 - \exp(-rt_f)\right] / r$$

Should public health (accident) risk not be discounted in an analysis, r effectively becomes zero in the preceding equations. In the limit as r approaches zero, $C = t_f - t_i$ (or, $C = t_f$ when $t_i = 0$). This new value of C should be used to evaluate W_{PHA} in the undiscounted case.

The quantity W_{PHA} must be interpreted carefully to avoid misunderstandings. It does not represent the expected reduction in public health (accident) risk due to a single accident. Rather, it is the present value of a stream of potential losses extending over the remaining lifetime of the facility. Thus, it reflects the expected annual loss due to a single accident (this is given by the quantity Z_{PHA}); the possibility that such an accident could occur, with some small probability, at any time over the remaining facility life; and the effects of discounting these potential future losses to present value. Since the quantity Z_{PHA} only accounts for the risk of an accident in a representative year, the result is the expected loss over the facility life, discounted to present value.

The FORECAST computer code for regulatory effects cost analysis (Lopez and Sciacca 1996) allows input for the public health (accident) attribute.

5.7.2 Public Health (Routine)

As with the public health (accident), the evaluation of the effect on public health from a change in routine exposure due to proposed regulatory actions is a multi-step process. Reduction in exposure is algebraically positive; increase is negative (viewed as a negative reduction).

The steps are as follows:

1. Estimate reductions in public health (routine) risk per facility for implementation (D_{PRI}) and operation (D_{PRO}) (see Section 5.7.2.1).

2. Convert each reduction in public health (routine) risk per facility from person-rems to dollars via monetary evaluation of health effects (see Section 5.7.2.2):

$$G_{PRI} = RD_{PRI} \qquad G_{PRO} = RD_{PRO}$$

where G_{PRI} = monetary value of per-facility reduction in routine public dose required to implement the proposed action, before discounting ($/facility)

G_{PRO} = monetary value of annual per-facility reduction in routine public dose to operate following implementation of the proposed action, before discounting ($/facility-year)
D_{PRI} = per-facility reduction in routine public dose required to implement the proposed action (person-rem/facility)
D_{PRO} = annual per-facility reduction in routine public dose to operate following implementation of the proposed action (person-rem/facility-year)
R = monetary equivalent of unit dose ($/person-rem).

3. Discount each reduction in public health (routine) risk per facility (dollars) [see Section B.2].

4. Sum the reductions and total over all facilities (dollars):

$$V_{PHR} = N(H_{PRI} + H_{PRO})$$

where V_{PHR} = discounted monetary value of reduction in public health (routine) risk for all affected facilities ($)
H_{PRI} = monetary value of per-facility reduction in routine public dose required to implement the proposed action, after discounting ($/facility)
H_{PRO} = monetary value of per-facility reduction in routine public dose to operate following implementation of the proposed action, after discounting ($/facility)
N = number of affected facilities.

Note the algebraic signs for D_{PRI} and D_{PRO}. A reduction in exposure is positive; an increase is negative. The dose for implementation (D_{PRI}) would normally be an increase and therefore negative.

If individual facility values rather than generic values are used, the formulations can be replaced with

$$V_{PHR} = \sum_i N_i \left(H_{PRI_i} + H_{PRO_i}\right)$$

where i = facility (or group of facilities) index.

5.7.2.1 Estimation of Change in Routine Exposure

A proposed NRC action can affect routine public exposures in two ways. It may cause a one-time increase in routine dose due to implementation of the action (e.g., installing a retrofit). It may also cause a change (either increase or decrease) in the recurring routine exposures after the action is implemented.[9] For the standard analysis, the analyst may attempt to make exposure estimates, or obtain at least a sample of industry or community data for a validation of the estimates developed. Baker (1995) provides estimates of population and individual dose commitments for reported radionuclide releases from commercial power reactors operated during 1991. Tichler et al. (1995) have compiled and reported releases of radioactive materials in airborne and liquid effluents from commercial Light Water Reactors (LWRs) during 1993. Data on solid waste shipments are also included. This report is updated annually. Routine public risks for non-reactor facilities have been assembled into composite lists in Section C.2.2.

5.7.2.2 Monetary Valuation of Routine Exposure

As with public health (accident) (Section 5.7.1.2), monetary valuation for public health (routine) employs the value of $2,000/person-rem as the best estimate of the monetary conversion factor (R).

The FORECAST computer code for regulatory effects cost analysis (Lopez and Sciacca 1996) allows input for the public health (routine) attribute.

5.7.3 Occupational Health (Accident)

Evaluating the effect on occupational health from a change in accident frequency due to proposed regulatory actions is a multi-step process. Reduction in occupational risk is algebraically positive; increase is negative (viewed as a negative reduction).

The steps are as follows:

1. Estimate reduction in accident frequency per facility (see Section 5.6).

2. Estimate reduction in occupational health (accident) risk per facility due to the following (see Section 5.7.3.1):

- "immediate" doses
- long-term doses

3. Per facility, convert value of occupational health (accident) risk avoided (person-rems) to monetary equivalent (dollars) via monetary evaluation of health effects, due to the following (see Section 5.7.3.2):

- "immediate" doses $Z_{IO} = RY_{IO}$
- long-term doses $Z_{LTO} = RY_{LTO}$

where Z_{IO} = monetary value of occupational health (accident) risk avoided per facility-year due to "immediate" doses, before discounting ($/facility-year)
Z_{LTO} = monetary value of occupational health (accident) risk avoided per facility-year due to long-term doses, before discounting ($/facility-year)
Y_{IO} = avoided occupational "immediate" dose per facility-year (person-rem/facility-year)
Y_{LTO} = avoided occupational long-term dose per facility-year (person-rem/facility-year)
R = monetary equivalent of unit dose ($/person-rem).

4. Discount to present value per facility (dollars) (see Section 5.7.3.3).

5. Total over all affected facilities (dollars) using

$$V_{OHA} = N\left(W_{IO} + W_{LTO}\right)$$

where V_{OHA} = discounted monetary value of occupational health (accident) risk avoided for all affected facilities
W_{IO} = monetary value of occupational health (accident) risk avoided per facility due to "immediate" doses, after discounting ($/facility)
W_{LTO} = monetary value of occupational health (accident) risk avoided per facility due to long-term doses, after discounting ($/facility)
N = number of affected facilities.

If individual facility values rather than generic values are used, the formulations can be replaced with

$$V_{OHA} = \sum_i N\left(W_{IO_i} + W_{LTO_i}\right)$$

where i = facility (or group of facilities) index.

5.7.3.1 Estimation of Accident-Related Exposures

There are two types of occupational exposure related to accidents: "immediate" and long-term. The first occurs at the time of the accident and during the immediate management of the emergency. The second is a long-term exposure, presumably at significantly lower individual rates, associated with the cleanup and refurbishment or decommissioning of the damaged facility. The value gained in the avoidance of both types of exposure must be conditioned on the change in frequency of the accident's occurrence (see Section 5.6).[10]

"Immediate" Doses

Licensing of nuclear facilities requires the license applicant to consider and attempt to minimize occupational doses. Radiation protection in a reactor control room is required to limit dose to 5-rem whole body under accident conditions (10 CFR 50, Appendix A, Criterion 19). The experience at the Three Mile Island (TMI) Unit 2 nuclear power plant indicated that potential for significant occupational exposures exists for activities outside the control room during a power reactor accident. (However, there was no individual occupational exposure exceeding 5-rem whole body at TMI-2.)

For the standard analysis specifically applied only to power reactor facilities, the analyst may employ the TMI or Chernobyl experience. At TMI, the average occupational exposure related to the incident was approximately 1 rem. A collective dose of 1,000 person-rem could be attributed to the accident. This occurred over a 4-month span, after which time occupational exposure was approaching pre-accident levels. An upper estimate for sensitivity analysis is obtained by assuming that the average individual receives a dose equal to that of the maximum individual dose at TMI. The ratio of maximum to average dose for TMI is 4.2 rem/1 rem; therefore, the upper estimate for the collective dose can be taken as 4,200 person-rem. A lower estimate of zero indicates a case where no increase over the normal occupational dose occurs.

The DOE (1987) summarized results on the collective dose received by the populace surrounding the Chernobyl accident. Average dose equivalents of 3.3 rem/person, 45 rem/person, and 5.3 rem/person were estimated for residents within 3 km, between 3 km and 15 km, and between 15 km and 30 km of Chernobyl, respectively (Mubayi et al. 1995, p. A-5). Although none of these translates readily into an occupational dose as that for TMI, a reasonable, but conservative, assumption would be that the average worker received the average dose for persons closest to the plant (i.e., 3.3 rem/person). For 1,000 workers, an average value of 3,300 person-rem is obtained, about three times that estimated for TMI-2. Given the greater severity of the Chernobyl accident, this seems reasonable. Using TMI's ratio of 4.2/1 for the maximum, an upper bound of 14,000 person-rem results. TMI's average value of 1,000 person-rem would appear to be a reasonable lower bound for Chernobyl.

Given the uncertainties in existing data and variability in severe accident parameters and worker response, the following is suggested as D_{IO} (immediate occupational dose) specifically for power reactor accidents:

Best estimate:	3,300	person-rem
High estimate:	14,000	person-rem
Low estimate:	1,000	person-rem

For a major effort beyond the standard analysis, specific calculations to estimate onsite exposures for various accidents could be performed.

Long-Term Doses

After the immediate response to a major power reactor accident, a long process of cleanup and refurbishment or decommissioning will follow. Significant occupational dose will result (individual exposures controlled by normal occupational dose guidelines). The values for the standard analysis specifically applied only to power reactors are based on a study (Murphy and Holter 1982) of decommissioning a reference LWR following postulated accidents. Table 5.5 summarizes the occupational doses estimated by the study and is presented for perspective.

Since this Handbook focuses on avoidance of major large-scale accidents, use of the following long-term doses based on Murphy and Holter (1982) is suggested specifically for power reactor accidents.

D_{LTO} (long-term occupational):

Best estimate:	20,000 person-rem
High estimate:	30,000 person-rem
Low estimate:	10,000 person-rem

Table 5.5 Estimated occupational radiation dose from cleanup and decommissioning after a power reactor accident (person-rem or person-cSv)

Activity	Accident Scenario 1[a]	Accident Scenario 2[b]	Accident Scenario 3[c]
Cleanup	670	4,580	12,100
Dismantlement and Decommissioning	1,230	3,060	7,660
Total	1,900	7,640	19,760

(a) Accident Scenario 1 - a small Loss of Coolant Accident (LOCA) in which Emergency Core Cooling System (ECCS) functions as intended. Some fuel cladding ruptures, but no fuel melts. The containment building is moderately contaminated, but there is minimal physical damage.

(b) Accident Scenario 2 - a small LOCA in which ECCS is delayed. Fifty percent of the fuel cladding ruptures, and some fuel melts. The containment building is extensively contaminated, but there is minimal physical damage. (This scenario is presumed to simulate the TMI-2 accident.)

(c) Accident Scenario 3 - a major LOCA in which ECCS is delayed. All fuel cladding ruptures, and there is significant fuel melting and core damage. The containment building is extensively contaminated and physically damaged. The auxiliary building undergoes some contamination.

Avoided Doses

To calculate the avoided accident-related occupational exposures, both the "immediate" and long-term occupational dose are multiplied by the reduction in accident frequency (see Section 5.6) which is postulated as a result of the proposed action.

$$Y_{IO} = \Delta F\ D_{IO} \qquad Y_{LTO} = \Delta F\ D_{LTO}$$

where ΔF = reduction in accident frequency (events/facility-year)
Y_{IO} = avoided occupational "immediate" dose per facility-year (person-rem/facility-year)
D_{IO} = immediate occupational dose
Y_{LTO} = avoided occupational long-term dose per facility-year (person-rem/facility-year)
D_{LTO} = long-term occupational dose.

It is possible that the proposed action will mitigate accident-related occupational exposures instead of (or as well as) reducing the accident frequency. In any case, it is the change from current condition to that following implementation of the proposed action that is sought. The formulation above can be replaced with the more explicit formulation below:

$$Y_{IO} = (FD_{IO})s - (FD_{IO})_A$$
$$Y_{LTO} = (FD_{LTO})s - (FD_{LTO})_A$$

where F = accident frequency (events/facility-year)
S = status quo (current conditions)
A = after implementation of proposed action.

Occupational risks from non-reactor accidents have been assembled into composite lists for selected non-reactor facilities in Section C.2.3. As for the public risks from non-reactor accidents, these also represent the products of accident frequencies and dose factors.

5.7.3.2 Monetary Valuation of Accident-Related Exposures

The analyst should use the $2000 per person-rem conversion value discussed in Section 5.7.1.2 for the monetary valuation of accident-related exposures.

5.7.3.3 Discounting Monetized Values of Accident-Related Exposures

The present values for "immediate" and long-term accident-related exposures in their monetized forms are calculated in slightly different ways.

"Immediate" Doses

For "immediate" doses, the present value is

$$W_{IO} = C \times Z_{IO}$$

where W_{IO} = monetary value of occupational health (accident) risk avoided per facility due to "immediate" doses, after discounting ($/facility)
C = $[\exp(-rt_i) - \exp(-rt_f)]/r$
t_f = years remaining until end of facility life
t_i = years before facility begins operating
r = real discount rate (as fraction, not percent)
Z_{IO} = monetary value of occupational health (accident) risk avoided per facility-year due to "immediate" doses, before discounting ($/facility-year).

If a facility is already operating, t_i will be zero and the equation for C simplifies to

$$C = \left[1 - \exp\left(-rt_f\right)\right] / r$$

Should occupational health (accident) risk due to "immediate" doses not be discounted in an analysis, r effectively becomes zero in the preceding equations. In the limit as r approaches zero, $C = t_f - t_i$ (or, $C = t_f$ when $t_i = 0$). This new value of C should be used to evaluate W_{IO} in the undiscounted case.

The quantity W_{IO} must be interpreted carefully to avoid misunderstandings. It does not represent the expected reduction in occupational health (accident) risk due to "immediate" doses as the result of a single accident. Rather, it is the present value of a stream of potential losses extending over the remaining lifetime of the facility. Thus, it reflects the expected annual loss due to a single accident (this is given by the quantity Z_{IO}); the possibility that such an accident could occur, with some probability, at any time over the remaining facility life; and the effects of discounting these potential future losses to present value. Since the quantity Z_{IO} only accounts for the risk of an accident in a representative year, the result is the expected loss over the facility life, discounted to present value.

Long-Term Doses

For long-term doses, the present value is

$$\begin{aligned} W_{LTO} &= \left[Z_{LTO}/mr^2\right]\exp(-rt_i) \\ &= \left[1 - \exp\left\{-r(t_f - t_i)\right\}\right]\left[1 - \exp(-rm)\right] \end{aligned}$$

where W_{LTO} = monetary value of occupational health (accident) risk avoided per facility due to long-term doses, after discounting ($/facility)
m = years over which long-term doses accrue[11]
r = real discount rate (as fraction, not percent)
t_f = years remaining until end of facility life
t_i = years before facility begins operating
Z_{LTO} = monetary value of occupational health (accident) risk avoided per facility-year due to long-term doses, before discounting ($/facility-year).

If the facility is already operating, t_i will be zero and the equation for W_{LTO} simplifies to

$$W_{LTO} = \left[Z_{LTO}/mr^2\right]\left[1 - \exp(rt_f)\right]\left[1 - \exp(-rm)\right]$$

Should occupational health (accident) risk due to long-term doses not be discounted in an analysis, r effectively becomes zero in the preceding equations. In the limit as r approaches zero

$$W_{LTO} = Z_{LTO}(t_f - t_i)$$
or
$$W_{LTO} = Z_{LTO}t_f, \text{ when } t_i = 0$$

The quantity W_{LTO} must be interpreted carefully to avoid misunderstandings. It does not represent the expected reduction in occupational health (accident) risk due to long-term doses as a result of a single accident. Rather, it is the present value of a stream of potential losses extending over the remaining lifetime of the facility. Thus, it reflects the expected annual loss due to a single accident (this is given by the quantity Z_{LTO}); the possibility that such an accident could occur, with some probability, at any time over the remaining facility life; and the effects of discounting these potential future losses to present value. Since the quantity Z_{LTO} only accounts for the risk of an accident in a representative year, the result is the expected loss over the facility life, discounted to present value.

The FORECAST computer code for regulatory effects cost analysis (Lopez and Sciacca 1996) allows input for the occupational health (accident) attribute.

5.7.4 Occupational Health (Routine)

As with occupational health (accident), the evaluation of the effect on occupational health from a change in routine exposure due to proposed regulatory actions is a multi-step process. Reduction in exposure is algebraically positive; increase is negative (viewed as a negative reduction).

The steps are as follows:

1. Estimate reductions in occupational health (routine) risk per facility for implementation (D_{ORI}) and operation (D_{ORO}) (see Section 5.7.4.1)

2. Convert each reduction in occupational health (routine) risk per facility from person-rems to dollars via monetary evaluation of health effects (see Section 5.7.4.2):

$$G_{ORI} = RD_{ORI} \qquad G_{ORO} = RD_{ORO}$$

where G_{ORI} = monetary value of per-facility reduction in routine occupational dose to implement the proposed action, before discounting (\$/facility)
G_{ORO} = monetary value of annual per-facility reduction in routine occupational dose to operate following implementation of the proposed action, before discounting (\$/facility-year)
D_{ORI} = per-facility reduction in routine occupational dose to implement the proposed action (person-rem/facility)
D_{ORO} = annual per-facility reduction in routine occupational dose to operate following implementation of the proposed action (person-rem/facility-year)
R = monetary equivalent of unit dose (\$/person-rem).

3. Discount each reduction in occupational health (routine) risk per facility (dollars) (see Section B.2)[9]

4. Sum the reductions and total over all facilities (dollars):

$$O_{OHR} = N\left(H_{ORI} + H_{ORO}\right)$$

where V_{OHR} = discounted monetary value of reduction in occupational health (routine) risk for all affected facilities ($)
H_{ORI} = monetary value of per-facility reduction in routine occupational dose required to implement the proposed action, after discounting ($/facility)
H_{ORO} = monetary value of per-facility reduction in routine occupational dose to operate following implementation of the proposed action, after discounting ($/facility)
N = number of affected facilities.

Note the algebraic signs for D_{ORI} and D_{ORO}. A reduction in exposure is positive; an increase is negative. The dose for implementation (D_{ORI}) would normally be an increase and therefore negative.

If individual facility values rather than generic values are used, the formulations can be replaced with

$$V_{OHR} = \sum_i N_i \left(H_{ORI_i} + H_{ORO_i}\right)$$

where i = facility (or group of facilities) index.

5.7.4.1 Estimation of Change in Routine Exposure

A proposed NRC action can affect routine occupational exposures in two ways. It may cause a one-time increase in routine dose due to implementation of the action (e.g., installing a retrofit). It may also cause a change (either increase or decrease) in the recurring routine exposures after the action is implemented. A new coolant system decontamination technique, for example, may cause a small implementation dose but may result in a decrease in annual exposures from maintenance thereafter.

For the standard analysis, the analyst may attempt to make exposure estimates, or obtain at least a sample of industry or other technical data for a validation of the estimates developed. There are two components in the development of an exposure estimate: estimating the radiation field (rem/hour) and estimating the labor hours required. The product is the exposure (person-rem). In developing operational estimates, the annual frequency of the activity is also required.

General estimates of radiation fields can be obtained from a number of sources. For power reactors, Chapter 12 of the Final Safety Analysis Report (FSAR) for the plant will contain a partitioning of the power plant into estimated radiation zones. Both summary tables and plant layout drawings are usually provided. Some FSARs provide exposure estimates for specific operational activities. The analyst must be cautioned that the FSAR values are calculated, not measured. Actual data from operating facilities, as might be obtained from facility surveys, would have greater accuracy. Generic estimates of dose rates for work on specific Pressurized Water Reactor (PWR) and BWR systems and components are provided by Beal et al. (1987) and included in Section B.3. These are used by Sciacca (1992) in NUREG/CR-4627 along with labor hours and occupational exposure estimates for specific repair and modification activities. Appropriate references are cited. The FORECAST computer code for regulatory effects cost analysis (Lopez and Sciacca 1996) contains a database of default dose rates and ranges for both PWR and BWR systems.

Work in a radiation zone inevitably requires extra labor due to radiation exposure limits and lower worker efficiency. Such inefficiencies arise from restrictive clothing, rubber gloves, breathing through filtered respirators, standing on

ladders or scaffolding, or crawling into inaccessible areas. In addition, paid breaks must be allowed for during a job. Basically, there are five types of adjustment factors identified for work on activated or contaminated systems. LaGuardia et al. (1986) identify the following five time duration multipliers:

1. Height (i.e., work conducted at elevations, e.g., on ladders or scaffolds) = 10-20% of basic time duration

2. Respiratory Protection = 25-50% of basic time duration

3. Radiation Protection = 10-40% of basic time duration

4. Protective Clothing = 30% of adjusted time duration

5. Work Breaks = 8.33% of total adjusted time duration.

Sciacca (1992) provides information from which to estimate relevant labor productivity factors, whose values can vary with the status of the plant and work environment at the time of the action.

Keeping these factors in mind, the analyst can proceed with the estimation of implementation and operational doses. The implementation dose would be

$$D_{ORI} = - F_R \times W_I$$

where D_{ORI} = per-facility reduction in routine occupational dose required to implement the proposed action (person-rem/facility-year)
F_R = radiation field in area of activity (rem/hour)
W_I = work force required for implementation (labor-hours/facility).

As mentioned earlier, implementation dose normally involves an increase, hence the negative sign in the equation.

The operational dose is the change from the current level; its formulation is

$$D_{ORO} = (F_R\ W_O\ A_F)_S - (F_R\ W_O\ A_F)_A$$

where D_{ORO} = annual per-facility reduction in routine occupational dose to operate following implementation of the proposed action (person-rem/facility-year)
F_R = radiation field in area of activity (rem/hour)
W_O = work force required for activity (labor-hours/facility-activity)
A_F = number of activities (e.g., maintenance, tests, inspections) per year (activities/year)
S = status quo (current conditions)
A = after implementation of proposed action.

Again, note the algebraic sign for D_{ORO}. As mentioned earlier, an operational dose reduction is positive; an increase is negative.

If the issue does not lend itself to the estimation procedure just presented, the analyst may use the following approximation specifically for reactor facilities. To estimate changes in routine operational dose, the analyst may directly estimate fractional changes for routine doses. The techniques for soliciting expert opinion discussed in Section 5.6.2 could be

employed. The average annual occupational dose for BWRs in 1993 was 330 person-rem/reactor and 0.31 person-rem/worker (see Table B.9). For PWRs, the average was 194 person-rem/reactor and 0.25 person-rem/worker (see Table B.10). The overall average annual occupational dose at LWRs in 1993 was 240 person-rem/reactor and 0.27 person-rem/worker (see Table B.11). Additional data on routine occupational exposure for both power reactors and non-reactor facilities are provided in Section B.3. Also, routine occupational risks for selected non-reactor facilities have been assembled into composite lists in Section C.2.4.

For a major effort beyond the standard analysis, the best source of data to estimate both the implementation and operational exposures would be a thorough survey of health physicists at the affected facilities. This survey could be screened for bias and potential inflated value by a knowledgeable third party.

5.7.4.2 Monetary Valuation of Routine Exposure

The analyst should use the $2000 per person-rem conversion factor discussed in Section 5.7.1.2 for the monetary valuation of routine exposures.

5.7.4.3 Nonradiological Occupational Impacts

In some cases, it will be possible to identify nonradiological occupational impacts associated with a proposed action. When possible, these should be identified and included in the regulatory analysis. One source of data on the incidence of occupational injuries for various industries is the report *Occupational Injuries and Illnesses in the United States by Industry*, published annually by the Department of Labor's Bureau of Labor Statistics (BLS). Data from this report can be accessed from the BLS Home Page on the Internet (URL: http://stats.bls.gov:80/datahome.htm).

Occupational injury data should be converted to a dollar valuation. The value of an injury should include medical costs and the value of lost production (RWG 1996, Section 5). The value of loss production is normally estimated using employee wage rates. Pain and suffering costs attributable to occupational injury can be identified qualitatively, but would not normally be quantified in dollar terms. Potential information sources for occupational injury valuation data are the National Center for Health Statistics (URL: http://www.cdc.gov/nchswww/nchshome.htm) and the publication *Accident Facts* published annually by the National Safety Council based in Itaska, Illinois.

5.7.5 Offsite Property

Estimating the effect of the proposed action upon offsite property involves three steps:

1. Estimate reduction in accident frequency (see Section 5.6), incorporating conditional probability of containment/confinement failure, if applicable.

2. Estimate level of property damage.

3. Calculate reduction in risk to offsite property as

$$V_{FP} = N\Delta FD$$

where V_{FP} = monetary value of avoided offsite property damage ($)
N = number of affected facilities

ΔF = reduction in accident frequency (events/facility-year)
D = present value of property damage occurring with frequency F ($-year).

It is possible that the proposed action mitigates the consequences of an accident instead of, or as well as, reducing the accident frequency. In that event, the value of the action is

$$V_{FP} = (NFD)_S - (NFD)_A$$

where F = accident frequency (events/facility-year)
S = status quo (current conditions)
A = after implementation of proposed action.

Reduction in offsite property damage costs (i.e., costs savings) is algebraically positive; increase (i.e., cost accruals) is negative (viewed as negative cost savings).

An important tool formerly used by the NRC to estimate power reactor accident consequences is the computer program CRAC2 (Ritchie et al. 1985). More recently, the computer code MACCS (Chanin et al. 1990, 1993; Summers et al. 1995a,b) has been developed to estimate power reactor accident consequences using currently available information. MACCS was employed for the consequence analyses in NUREG-1150 (NRC 1991). The analyst interested in code descriptions for CRAC2 or MACCS is referred to the references cited.

For the standard analysis specifically applied only to power reactor facilities, estimates based on work by Mubayi et al. (1995) can be employed. Mubayi et al. (1995) have developed costs for offsite consequences for the five power reactors analyzed in NUREG-1150 (NRC 1991). These costs have been weighted by the frequencies of the accident release categories for the five plants. The results (in 1990 dollars) are given in Table 5.6. The analysis used Version 1.5.11.1 of the MACCS computer code (Chanin et al. 1993) on a site-specific basis. Offsite costs have been calculated as the sum of those for emergency response and long-term protective action, defined as follows:

- For early consequences, an effective emergency response plan consisted of evacuation of all but 0.5% of the population within a ten-mile radius at a specified speed and delay time following notification of the emergency.

Table 5.6 Weighted costs for offsite property damage for the five NUREG-1150 power reactors

Reactor	Type	Cost (1990 $) Within 50 Miles from the Plant
Zion	PWR	2.23E+8
Surry	PWR	2.30E+8
Sequoyah	PWR	3.19E+8
Peach Bottom	BWR	2.71E+9
Grand Gulf	BWR	1.87E+8
Average		2.46E+8

- For long-term relocation and banning of agricultural products, the interdiction criterion was 4 rem to an individual over five years (2 rem in year one, followed by 0.5 rem each successive year).

Cost values within 50 miles are to be used in the regulatory analysis. Alternative values reflecting shorter and longer distances from the plant may be used for sensitivity analyses or special cases, and are available in Mubayi et al. (1995).

The present value for offsite property damage can be calculated as

$$D = C \times B$$

where D = present value of offsite property damage ($-year)
C = $[\exp(-rt_i) - \exp(-rt_f)]/r$
t_f = years remaining until end of facility life
t_i = years before facility begins operating
r = real discount rate (as fraction not percent)
B = undiscounted cost of offsite property damage.

If a facility is already operating, t_i will be zero and the equation for C simplified to

$$C = \left[1 - \exp(-rt_f)\right] / r$$

Should offsite property damage not be discounted in an analysis (e.g., when the time frame is sufficiently short to mitigate the need for discounting), r effectively becomes zero in the preceding equations. In the limit as r approaches zero, $C = t_f = t_i$ (or, $C = t_f$ when $t_i = 0$). This new value for C should be used to evaluate D in the undiscounted case.

The quantity D must be interpreted carefully to avoid misunderstandings. It does not represent the expected offsite property damage due to a single accident. Rather, it is the present value of a stream of potential losses extending over the remaining lifetime of the facility. Thus, it reflects the expected loss due to a single accident (this is given by the quantity B); the possibility that such an accident could occur, with some probability, at any time over the remaining facility life; and the effects of discounting these potential future losses to present value. When the quantity D is multiplied by the annual frequency of an accident, the result is the expected loss over the facility life, discounted to present value.

Costs for offsite property damage from non-reactor accidents have been assembled in Section C.2.5. However, most are given as combined offsite and onsite damage costs and have not been as thoroughly estimated as those by Mubayi et al. (1995) for offsite property damage from power reactor accidents.

At a more detailed level, but still within the scope of a standard analysis, the analyst can identify the affected facilities, then calculate the proper sum effect rather than relying on generic values. The following steps are required:

1. Identify affected facilities.

2. Identify reductions in accident frequency per facility.

3. Calculate value of property damage per facility.

4. Calculate avoided property damage value per facility.

5. Sum avoided property damage over affected facilities.

In the 1983 Handbook, Heaberlin et al. made extensive use of NUREG/CR-2723 (Strip 1982) for offsite property cost estimation. Strip reported the present value of offsite health and property costs, onsite costs, and replacement power costs for accidents in release categories SST1 through SST3 for 91 U.S. power reactor sites. The offsite property costs were based on CRAC2 results, with 1970 population estimates and state-wide land use. The analyst may find the site-specific emphasis in Strip (1982) helpful in a more detailed value-impact analysis.

For a major effort beyond the standard analysis, it is recommended that the estimates be derived from information more site-specific than that used by Strip (1982). For power reactors, the MACCS code with the most recent data available should be used. This degree of effort would be relatively costly to conduct, both in terms of computer costs and data collection and interpretation costs. However, it would provide the highest degree of reliability.

Burke et al. (1984) examined the offsite economic consequences of severe LWR accidents, developing costs models for the following:

- population evacuation and temporary sheltering, including food, lodging, and transportation
- emergency phase relocation, including food, housing, transportation, and income losses
- intermediate phase relocation, beginning immediately after the emergency phase
- long-term protective actions, including decontamination of land and property and land area interdiction
- health effects, including the two basic approaches (human capital and willingness-to-pay).

Tawil et al. (1991) compared three computer models for estimating offsite property damage from power reactor accidents. Two of the models are the CRAC2 and MACCS codes; the third is the computer code DECON (Tawil et al. 1985). Three accident severity categories—SST1-SST3—are considered for the six Pasquill atmospheric stability categories (A-F). Offsite property damage is calculated for each pairing at cleanup levels from 10 through 200 rems. A study is also performed comparing the effect of modeling offsite damage to radii of 50 and 500 miles. It indicates that the choice of radius is significant only for the SST1 accident category, the differences being quite pronounced.

The FORECAST computer code for regulatory effects cost analysis (Lopez and Sciacca 1996) allows input for the offsite property attribute.

5.7.6 Onsite Property

Section 4.3.1 of the NRC Guidelines states that onsite property damage cost savings (i.e., averted onsite costs) need to be included in the value-impact analysis. In the net-value formulation it is a positive attribute.

Estimating the effect of the proposed action on onsite property involves three steps:

1. Estimate reduction in accident frequency (see Section 5.6).

2. Estimate onsite property damage.

3. Calculate reduction in risk to onsite property as

$$V_{OP} = N \Delta F U$$

where V_{OP} = monetary value of avoided onsite property damage ($)
N = number of affected facilities
ΔF = reduction in accident frequency (events/facility-year)
U = present value of property damage occurring with frequency F ($-year).

Reduction in onsite property damage costs (i.e., costs savings) is algebraically positive; increase (i.e., cost accruals) is negative (viewed as negative cost savings).

For the standard analysis, it is convenient to treat onsite property costs under three categories: 1) cleanup and decontamination, 2) long-term replacement power, and 3) repair and refurbishment. Each of these categories is considered below for power reactors with the focus on large-scale core-melt accidents. Additional categories of costs have been considered by Mubayi et al. (1995) and Burke et al. (1984) as outlined in Section 5.7.6.4, but they were either found to be speculative or contributed small fractions to the costs identified below.

5.7.6.1 Cleanup and Decontamination

Cleanup and decontamination of a nuclear facility, especially a power reactor, following a medium or severe accident can be extremely expensive. For example, Mubayi et al. (1995) report that the total cleanup and decontamination of TMI-2 cost roughly $750 million (in 1981 dollars). Murphy and Holter (1982) estimated cleanup costs for a reference PWR and BWR for the following three accident scenarios:

- Scenario 1 - a small LOCA in which ECCS functions as intended. Some fuel cladding ruptures, but no fuel melts. The containment building is moderately contaminated, but there is minimal physical damage.

- Scenario 2 - a small LOCA in which ECCS is delayed. Half of the fuel cladding ruptures, and some fuel melts. The containment building is extensively contaminated, but there is minimal physical damage.

- Scenario 3 - a major LOCA in which ECCS is delayed. All fuel cladding ruptures, and there is significant fuel melting and core damaged. The containment building is extensively contaminated and physically damaged. The auxiliary building undergoes some contamination.

In 1981 dollars, Murphy and Holter estimated the following cleanup costs:

Scenario	PWR	BWR
1	$1.05E+8	$1.28E+8
2	$2.24E+8	$2.28E+8
3	$4.04E+8	$4.21E+8

Mubayi et al. (1995) consider the TMI-2 accident to lie between Scenarios 2 and 3, lying closer to Scenario 3 in terms of the contamination and damage to the core. Murphy and Holter's costs were somewhat less than those actually realized at TMI. Mubayi et al. (1995) attribute the difference to three factors:

1. The start of the TMI cleanup was delayed by 2.5 years due to regulatory and financial requirements. Murphy and Holter assumed no additional delays between the accident and start of the cleanup. Mubayi et al. (1995) consider this somewhat unrealistic.

2. Decontamination at TMI required facilities not included in Murphy and Holter's reference plants (e.g., a hot chemistry laboratory, containment recovery service building, and comment center/temporary personnel access facility).

3. TMI required additional decontamination of the containment building after the reactor was defueled. Murphy and Holter excluded this in their analysis.

When these three factors are considered, the results from Murphy and Holter become reasonably consistent with the actual TMI cleanup costs ($7.50E+8 in 1981 dollars).

Burke et al. (1984) produced a very rough estimate of $1.7 billion (in 1982 dollars) for the cleanup and decontamination costs following a severe power reactor accident. An uncertainty range of approximately 50% was assigned, bringing the lower bound reasonably in line with the actual TMI cleanup cost. A study by Konzek and Smith (1990) updated the cleanup costs associated with Murphy and Holter's Scenario 3. Costs ranging from $1.22E+9 to $1.44E+9 (in undiscounted 1989 dollars) were estimated, based on real escalation rates of 4% to 8% during the cleanup period. A base cost of $1.03E+9 was estimated assuming no real escalation during the cleanup period.

After converting the costs to undiscounted 1993 dollars, the cost reported by Mubayi et al. (1995) for TMI is $1.2E+9, the base estimate from Konzek and Smith (1990) is $1.2E+9, and the estimate from Burke et al. (1984), which doubled the cost of TMI, is $2.5E+9. Based on these references, the total onsite cost estimates given in Section 5.7.6.4 are based on $1.5E+9 (undiscounted) for cleanup and decontamination (C_{CD} in the equations that follow). For sensitivity analysis, lower and upper bounds of $1.0E+9 and $2.0E+9 are recommended for evaluating severe accident effects.

Assuming the $1.5E+9 estimate is spread evenly over a 10-year period for cleanup (i.e., constant annual cost of C_{CD}/m = $1.5E+8 in the equation below, with C_{CD} = $1.5E+9 and m = 10 years), and applying a 7% real discount rate, the cost translates into a net present value of $1.1E+9 for a single event. This quantity is derived from the following equation (see Section B.2.3):

$$PV_{CD} = \left[C_{CD} / mr\right]\left[1 - \exp(-rm)\right]$$

where PV_{CD} = net present value of cleanup and decontamination costs for single event ($)
C_{CD} = total undiscounted cost for single accident in constant year dollars ($)
m = years required to return site to pre-accident state
r = real discount rate (as fraction, not percent).

Before proceeding, this present value must be decreased by the cleanup and decontamination costs associated with normal reactor end-of-life. The Yankee Atomic Electric Co. (NRC 1995c), Sacramento Municipal Utility District (NRC 1994), and Portland General Electric Co. (1995) provided the following estimates to the NRC for decommissioning their Yankee Rowe, Rancho Seco, and Trojan nuclear power plants, respectively: $3.41E+8 (1991 dollars), $2.80E+8 (1991 dollars), and $4.15E+8 (1993 dollars). These suggest a value of approximately $0.4E+9 (1993 dollars) for "normal" cleanup and decommissioning. The analyst can also consult Bierschbach (1995) for estimating PWR decommissioning costs and Bierschbach (1996) for estimating BWR decommissioning costs.

When spread evenly over the same 10-year period at a 7% real discount rate, this translates into a net present value of $0.3E+9. However, since this value would "normally" be applied at reactor end-of-life (i.e., 24 years later, using the

estimate from Table B.1), the net present value (at the same 7% real discount rate) is reduced to \$0.06E+9. Since this amounts to only 5% of the net present value for cleanup and decontamination following a severe accident (\$1.1E+9), it can be generally ignored.

The total onsite cost estimates shown in Section 5.7.6.4 integrate this net present value over the average number of remaining service years (24 years) using the following equation:

$$U_{CD} = \left[PV_{CD} / r\right]\left[1 - \exp(-rt_f)\right]$$

where U_{CD} = net present value of cleanup and decontamination over life of facility (\$-year)
t_f = years remaining until end of facility life.

The integrated cost is \$1.3E+10 over the life of a power reactor. This cost must be multiplied by the accident frequency (F, expressed in events per facility-year), and the number of reactors, to determine the expected value of cleanup and decontamination costs. To determine averted costs, the reduction in accident frequency ΔF is applied as outlined in Section 5.7.6.

For comparison, these costs can also be estimated for less severe accidents as defined by Murphy and Holter's Scenarios 1 and 2. The estimates shown in the following table were obtained by using \$1.1E+9 (1993 dollars) as a base value for Scenario-3 PV_{CD} costs, and applying the same relative fractions as shown in Murphy and Holter's (1982) results for Scenario-1 and 2 costs. The results from Murphy and Holter were not used directly because of the factors cited by Mubayi et al. (1995) in comparisons of those estimates with actual cleanup and decontamination costs at TMI.

Scenario	PV_{CD}	U_{CD}
1	\$3.1E+8	\$3.7E+9
2	\$6.0E+8	\$7.1E+9
3	\$1.1E+9	\$1.3E+10

The issue of license renewal has only moderate implications for the integrated cost estimates (U_{CD}). With longer operating lifetimes, the reactors are at risk for more years, and the costs would be expected to increase accordingly. However, because the additional costs are discounted to present worth terms, the effect is not substantial. For example, an additional life extension of 20 years would only increase the value of U_{CD} for a Scenario-3 accident 15% from \$1.3E+10 to \$1.5E+10.

5.7.6.2 Long-Term Replacement Power

Replaced power for short-term reactor outages is discussed in Section 5.7.7.1. Following a severe power reactor accident (replacement power need be considered only for electrical generating facilities), replacement power costs must be considered for the remaining reactor lifetime.[12]

Argonne National Laboratory (ANL) has developed estimates for long-term replacement power costs based on simulations of production costs and capacity expansion for representative pools of utility systems (VanKuiken et al. 1992). VanKuiken et al. examined replacement energy and capacity costs, including purchased energy and capacity charges required to provide the same level of system reliability as available prior to the loss of a power reactor (VanKuiken et al. 1993). In the event of a permanent shutdown, it was assumed that a reactor would be replaced by one or more alternative generating units, after an appropriate delay for planning and construction.

Capacity expansion and production cost simulations were performed for six representative power reactors over 40-year study periods. The results were used to estimate replacement power costs for each of 112 reactors which, at the time of the study, were expected to be in operation by 1996. Cost estimates for each reactor reflect the remaining lifetimes, reactor sizes, and ranges in short-term replacement energy costs (as encountered in each utility). Averages were determined by summing the individual reactor costs and dividing by the number of reactors evaluated. Characteristics for the "generic" reactor cited in Section 5.7.6.4 reflect an average unit size of 910-MWe and average life remaining of 24 years for reactors currently operating and planned.

Simulation results were first used to estimate the present value costs of single accidents occurring in each year of remaining facility lifetimes (quantity PV_{RP} used in the discussions that follow). Each of these net present values represents a summation of annual replacement power costs incurred from the year of the assumed accident to the final year of service. For example, the average net present value for an event occurring in 1993 is \$1.1E+9. For 1994, the cost is \$1.0E+9, and for 1995, the cost is \$0.9E+9. The decline in costs with each successive year reflects present value considerations and the fact that there are fewer remaining service years requiring replacement power.

The following equation can be used to approximate the average value of PV_{RP} for alternative discount rates.

$$PV_{RP} = [\$1.2E + 8 / r] \left[1 - \exp(-rt_f)\right]^2$$

where PV_{RP} = net present value of replacement power for a single event (\$).

The \$1.2E+8 value used in the above equation has no intrinsic meaning. It is treated in the equation similar to an equivalent annual cost, but it is actually a substitute for a string of non-constant replacement power costs that occur over the lifetime of the generic reactor after an event that takes place in 1993. The equation is only presented here for examining the effects of alternate discount rates and remaining reactor lifetimes.

The above equation for PV_{RP} was developed for discount factors in the range of 5%-10%. Unlike the equations for PV_{CD} and U_{CD}, the equation for PV_{RP} diverges from modeled results at lower discount rates. At a discount rate of 3% the recommended value for PV_{RP} is \$1.4E+9, as compared with the equation estimate of \$1.1E+9. For discount rates between 1% and 5% the analyst is urged to make linear interpolations using \$1.6E+9 at 1% and \$1.2E+9 at 5%. At higher discount rates the equation for PV_{RP} provides recommended estimates of \$1.2E+9 at 5% and \$1.0E+9 at 10%.

The results that are applied in Section 5.7.6.4 sum the single-event costs over all years of reactor service. While these summations were calculated directly from simulation results, ANL found that the outcomes could be closely approximated with the equation that follows. The squared term in this equation serves as a proxy for the fact that costs for events in future years decline due to the reduced number of remaining service years for which replacement power is required:

$$U_{RP} = [PV_{RP} / r] \left[1 - \exp(-rt_f)\right]^2$$

where U_{RP} = net present value of replacement power over life of facility (\$-year).

Replacement power costs for the generic unit are estimated to be approximately \$10 billion over the life of the facility. An uncertainty range for this average is estimated at approximately 20%. However, the range of estimates for specific power reactors varies directly with unit size, remaining life, and replacement energy costs. For example, costs were estimated to be \$7.5 billion for the 1040-MWe Zion-2 reactor, assuming 16 years of remaining operating life. Zion-2 is in a power pool with approximately average replacement energy costs. In contrast, costs for Big Rock Point were \$120 million due to its smaller size (67-MWe), shorter remaining life (8 years assumed), and average replacement energy costs. At the upper

limit were costs of $24 billion for the 1090-MWe Nine Mile Point 2 unit, assuming 34 years of service remaining. Nine Mile Point 2 is in a power pool with above average replacement energy costs.

As noted for PV_{RP}, the equation for U_{RP} was developed for discount rates ranging from 5%-10%. For lower discount rates, linear interpolations for U_{RP} are recommended between $1.9E+10 at 1% and $1.2E+10 at 5%. The equation for U_{RP} yields the recommended values of $1.2E+10 at 5% and $0.8E+10 at 10%, based on PV_{RP} values described previously.

As discussed in Section 5.7.6.4, these summed costs must be multiplied by the accident frequency (expressed in events per facility-year) to determine the expected value of replacement power costs for a typical reactor. To determine the value of reductions in the accident frequency due to regulatory actions, the total integrated costs must be multiplied by the reduction in accident frequency ΔF and the number of reactors affected (N).

The issue of license renewal has a much more significant impact on replacement power costs than on cleanup and decontamination costs. Extending the operating life by an additional 20 years would increase the net present value of a single event (PV_{RP}) by about 38%, and would increase the present value of costs integrated over the reactor life (U_{RP}) by about 90% (VanKuiken et al. 1992). Thus, a license renewal period of 20 years would mean the generic reactor would have a remaining life of 44 years, PV_{RP} would be estimated to be $1.5E+9, and U_{RP} would be approximately $1.9E+10 (1993 dollars).

For less severe accidents such as characterized by Scenario-1 events, the analyst is referred to Section 5.7.7.1 which addresses short-term replacement energy costs. Replacement capacity costs, which contribute to severe accident costs, are not incurred for more temporary reactor shutdowns.

5.7.6.3 Repair and Refurbishment

In the event of recoverable accidents (i.e., for Scenario 1, but not Scenarios 2 or 3), the licensee will incur costs to repair/replace damaged components before a facility can be returned to operation (these costs are not included in the total onsite cost estimates for severe accidents as addressed in Section 5.7.6.4). Burke et al. (1984) have estimated typical costs for equipment repair on the order of $1,000/hr of outage duration, based on data from outages of varying durations at reactors. They suggest an upper bound of roughly 20% of the long-term replacement power costs for a single event. Mubayi et al. (1995) observe that the $1,000/hr figure corresponds closely to the repair costs following the Browns Ferry fire and also to the TMI-1 steam generator retubing outage costs.

5.7.6.4 Total Onsite Property Damage Costs

Based on the information included in Sections 5.7.6.1 and 5.7.6.2, ANL has estimated the total cost due to onsite property damage following a severe reactor accident for the Zion-2 reactor and a "generic" 910-MWe reactor assumed to have a remaining life of 24 years. Total costs are assumed to consist of cleanup and decontamination costs and replacement power costs (repair and refurbishment costs are not included for severe accidents). The total costs described below correspond to the "risk-based" costs as defined by Mubayi et al. (1995):

> "...risk-based cost, the discounted net present value of the risk over the remaining life of the plant, which is proportional to the accident frequency [F]..."

The risk-based costs (quantities U, U_{CD}, and U_{RP} in the equations that follow) must be interpreted carefully to avoid misunderstandings. They do not represent the expected onsite property damage due to a single accident. Rather, they are the present value of a stream of potential losses extending over the remaining lifetime of the facility. Thus, they reflect the expected loss due to a single accident (given by quantities PV_{CD} and PV_{RP}); the possibility that such an accident could

occur, with some small probability, at any time over the remaining facility life; and the effects of discounting those potential future losses to the present value. When the quantity U is multiplied by the annual accident frequency, the result is the expected loss over the facility life, discounted to the present value.

The estimates for total risk-based costs attributed to regulatory actions that occur in 1993, expressed in 1993 dollars assuming a 7% real annual discount rate, are as follows:

Variable	Cost Component	Zion-2	"Generic" Reactor
U_{RP}	Replacement Power	\$0.7E+10 x F	\$1.0E+10 x F
U_{CD}	Cleanup & Decontamination	\$1.0E+10 x F	\$1.3E+10 x F
U	Total	\$1.7E+10 x F	\$2.3E+10 x F

Alternate values of U may be approximated for different discount rates, years of operation remaining, and estimates for C_{CD} and PV_{RP}. However, for changes in discount rate or final year of operation, the analyst is cautioned to revise the estimates for PV_{RP} using the equation described in Section 5.7.6.2 prior to re-estimating U from the equation that follows. Also, for discount rates lower than 5%, PV_{RP} and U_{RP} should be estimated from interpolation guidelines presented in Section 5.7.6.2 rather than from the equations. The relationship that defines total lifetime costs is

$$\begin{aligned} U &= U_{CD} + U_{RP} \\ &= \left[C_{CD} / mr^2\right]\left[1 - \exp(-rt_f)\right]\left[1 - \exp(-rm)\right] + \left[PV_{RP} / r\right]\left[1 - \exp(-rt_f)\right]^2 \end{aligned}$$

where U = total net present value of onsite property damage (\$-year).

The procedure outlined in Section 5.7.6 may be used to evaluate averted onsite property damage using these estimates. For illustration, assume that the reduction in severe accident frequency (ΔF) is 1.0E-6 and the number of reactors affected (N) is 111. The total averted onsite damage costs would be

$$V_{OP} = N\Delta FU = (111)(1.0E-6)(\$2.3E+10) = \$2.6E+6$$

The value of this reduction in accident frequency is \$2.6 million (net present value in 1993 dollars).

The \$2.3E+10 value used above is an appropriate generic estimate for regulatory requirements that become effective in 1993 and that affect severe accident probabilities in that year. For regulatory actions that affect accident frequencies in future years, the cost estimates must be adjusted to recognize that the number of reactor-years at risk and the number of service years requiring replacement power are reduced. Table 5.7 shows how these factors affect cost estimates for the 10-year period of 1993-2002. The results are expressed as net present values discounted to the year that the rulemaking is assumed to take effect.

To illustrate the use of these estimates, assume a reduction in accident frequency of 1.0E-6 begins in 1998 and affects all 111 of the remaining reactors. The revised estimate for U would be \$1.9E+10 and the total averted onsite damage costs for this reduction in frequency would be

$$V_{OP} = (111)(1.0E-6)(\$1.9E+10) = \$2.1E+6 \text{ (1993 dollars)}$$

Table 5.7 Onsite property damage cost estimates (U) for future years (1993 dollars discounted to year of implementation)

	Cleanup and Decontamination (U_{CD})	Replacement Power (U_{RP})	Total (U)
1993	\$1.3E+10	\$1.0E+10	\$2.3E+10
1994	\$1.2E+10	\$9.6E+9	\$2.2E+10
1995	\$1.2E+10	\$9.1E+9	\$2.1E+10
1996	\$1.2E+10	\$8.6E+9	\$2.1E+10
1997	\$1.1E+10	\$8.1E+9	\$1.9E+10
1998	\$1.1E+10	\$7.6E+9	\$1.9E+10
1999	\$1.1E+10	\$7.1E+9	\$1.8E+10
2000	\$1.1E+10	\$6.6E+9	\$1.8E+10
2001	\$1.0E+10	\$6.2E+9	\$1.6E+10
2002	\$1.0E+10	\$5.7E+9	\$1.6E+10

This would indicate that the reduction in accident frequency valued at \$2.6 million beginning in 1993 would be valued at \$2.1 million if introduced in 1998 (1993 dollars adjusted to 1998).

The following linear equation provides approximate cost estimates for implementation later than 10 years in the future. The result represents net present value (1993 dollars) discounted to the year of implementation. The analyst must adjust the 1993 dollars for general inflation if costs are to be expressed in alternate reference-year dollars. (See Section 5.8 for information on adjusting dollar years.)

$$U = \$2.3E+10 - (\$6.7E+8)\,(t_i - 1993)$$

where t_i = year of reduction in accident frequency.

Thus, for regulatory actions that would affect accident probabilities for 86 reactors remaining in service in 2010, the revised estimate for U would be

$$\begin{aligned} U &= \$2.3E+10 - (\$6.7E+8)\,(2010 - 1993) \\ &= \$1.2E+10 \text{ (1993 dollars adjusted to 2010)} \end{aligned}$$

The total averted onsite damages costs for a reduction in accident frequency of 1.0E-6 would be

$$\begin{aligned} V_{OP} &= (86)\,(1.0E-6)\,(\$1.2E+10) \\ &= \$1.0E+6 \text{ (1993 dollars adjusted to 2010)} \end{aligned}$$

This example also illustrates that the number of reactors at risk and the average remaining years of reactor service change in the evaluation of future regulatory initiatives. Because of the distribution of license expiration dates, the average remaining reactor life does not decrease on a one-to-one basis with each successive year in the future.

For 20-year license renewal considerations, the estimates for U discussed above should be increased by approximately 50%. In 1993, U_{CD} would be estimated at \$1.5E+10 (versus \$1.3E+10 for 40-year license), and U_{RP} would be estimated to be \$1.9E+10 (versus \$1.0E+10 for 40-year license). This yields a total of \$3.4E+10 (1993 dollars) as compared with \$2.3E+10 for the 40-year license assumption.

Costs for onsite property damage from non-reactor accidents have been assembled in Section C.2.5. However, most are given as combined offsite and onsite damage costs.

For a major effort beyond the standard analysis, there are two general ways to achieve a greater level of detail: 1) the analysis can be conducted for individual facilities or groups of similar facilities, using site-specific information; 2) the analysis can provide cost information in much greater detail. With regard to the first approach, the most relevant site-specific information includes the cost of long-term replacement power and the value of the facility and equipment at risk, taking into account the remaining useful life of the facility. The analyst is referred to VanKuiken et al. (1992) for further detail on average shutdown costs for different categories of reactors (e.g., by region, reactor supplier, architect engineer, etc.), and guidance for scaling costs for different unit sizes and remaining lifetimes.

With regard to providing greater detail on the cost information, the major cost elements (in addition to replacement power) are likely to include decontamination and other cleanup costs and repair or replacement of plant and equipment that is physically damaged. Other costs relate to transporting and disposing of contaminated materials and equipment, and startup costs. Costs for monitoring the site for radiation and fixing contamination at the site will likely be insignificant relative to the other costs. The analyst is referred to Murphy and Holter (1982), and the follow-up study by Konzek and Smith (1990), for detailed cost estimates to decontaminate a nuclear power reactor following a postulated accident.

Burke et al. (1984) examined the onsite economic consequences of severe LWR accidents, developing cost models for the following:

- replacement power, drawing information mainly from Buehring and Peerenboom (1982) (which has been updated by VanKuiken et al. [1992])
- plant decontamination, including both medium and large consequence events
- plant repair, spanning small to large consequence events
- early decommissioning for medium and large consequence events
- worker health effects and medical care, primarily for medium and large consequence events
- electric utility "business" (i.e., costs resulting from changed risk perceptions in financial markets and the need to replace the income once produced by the operating plant after a power plant is permanently shutdown)
- nuclear power "industry" (i.e., costs resulting from elimination or slowed growth in the U.S. nuclear power industry due to altered policy decisions and risk perceptions following a severe accident)
- onsite litigation (i.e., "legal fees for the time and effort of those individuals involved in the litigation process").

The first three categories of costs have been covered in Sections 5.7.6.1-5.7.6.3. The other categories are covered elsewhere in this Handbook or are considered to be either speculative or small in magnitude relative to replacement power, cleanup and decontamination, and repair costs.

The FORECAST computer code for regulatory effects cost analysis (Lopez and Sciacca 1996) allows input for the onsite property attribute.

5.7.7 Industry Implementation

This section provides procedures for computing estimates of the industry's incremental costs to implement the proposed action. Estimating incremental costs during the operational phase that follows the implementation phase is discussed in Section 5.7.8. Incremental implementation costs measure the additional costs to industry imposed by the regulation; they are costs that would not have been incurred in the absence of that regulation. Reduction in the net cost (i.e., cost savings) is algebraically positive; increase (i.e., cost accrual) is negative (viewed as negative cost savings). Both NRC and Agreement State licensees should be addressed, as appropriate.

In general, there are three steps that the analyst should follow in order to estimate industry implementation costs:

Step 1 - Estimate the amount and types of plant equipment, materials, and/or labor that will be affected by the proposed action.

Step 2 - Estimate the costs associated with implementation.

Step 3 - If appropriate, discount the implementation costs, then sum (see Section B.2).

In preparing an estimate of industry implementation costs, the analyst should also carefully consider all cost categories that may be affected as a result of implementing the action. Example categories include

- land and land-use rights
- structures
- hydraulic, pneumatic, and electrical equipment
- radioactive waste disposal
- health physics
- monitoring equipment
- personnel construction facilities, equipment, and services
- engineering services
- recordkeeping
- procedural changes

- license modifications
- staff training/retraining
- administration
- facility shutdown and restart
- replacement power (power reactors only)
- reactor fuel and fuel services (power reactors only)
- items for averting illness or injury (e.g., bottled water or job safety equipment).

Note that transfer payments (see Section 4.3) should not be included.

For the standard analysis, the analyst should use consolidated information to estimate the cost to industry for implementing the action. Sciacca (1992) is a prime source of such information, providing not only cost estimates, but also labor hours, cost rates, and adjustment factors, mainly for reactor facilities. Appropriate references are cited by Sciacca. The FORECAST computer code for regulatory effects cost analysis (Lopez and Sciacca 1996) incorporates much of the information assembled by Sciacca (1992) into a computer database for the analyst's use in estimating industry implementation as well as other costs.

Step 1 - Estimate the amounts and types of plant equipment, materials, and/or labor that will be affected by the proposed action, including not only physical equipment and craft labor, but professional staff labor for design, engineering, quality assurance, and licensing associated with the action. If the action requires work in a radiation zone, the analyst should account for the extra labor required by radiation exposure limits and low worker efficiency due to awkward radiation protection gear and tight quarters (see discussion of labor productivity in Section 5.7.4.1).

When performing a sensitivity analysis, but not for the best estimate, the analyst should include contingencies, such as the most recent greenfield construction project contingency allowances supplied by Robert Snow Means Co., Inc. (1995). They suggest adding contingency allowances of 15% at the conceptual stage, 10% at the schematic stage, and 2% at the preliminary working drawing stage. The FORECAST computer code (Lopez and Sciacca 1996) contains an option to include an allowance for uncertainty and cost variations at the summary cost level. The Electric Power Research Institute (EPRI 1986) offers guidelines for use in estimating the costs for "new and existing power generating technologies." EPRI suggests applying two separate contingency factors, one for "projects" to cover costs resulting from more detailed design, and one for "process" to cover costs associated with uncertainties of implementing a commercial-scale new technology.

Step 2 - Estimate the costs associated with implementation, both direct and indirect. Direct costs include materials, equipment, and labor used for the construction and initial operation of the facility during the implementation phase. Indirect costs include required services. The analyst should identify any significant secondary costs that may arise. One-time component replacement costs and associated labor costs should be accounted for here. For additional information on cost categories, especially for reactor facilities, see Schulte et al. (1978) and United Engineers and Constructors, Inc. (1979; 1988a, b).

Step 3 - If appropriate, discount the costs, then sum. If costs occur at some future time, they should be discounted to yield present values (see Section B.2). If all costs occur in the first year or if present value costs can be directly estimated, discounting is not required. Generally, implementation costs would occur shortly after adoption of the proposed action.

When performing value-impact analyses for non-reactor facilities, the analyst will encounter difficulty in finding consolidated information on industry implementation costs comparable to that for power reactors. Comprehensive data sources such as Sciacca (1992) and the references from which he drew his information are generally unavailable for non-reactor facilities. Some specific information for selected non-reactor facilities is in Sections C.7-C.10. The types of non-reactor facilities (see Section C.1) are quite diverse. Furthermore, within each type, the facility layouts typically lack the limited standardization of the reactor facilities. These combine to leave the analyst pretty much "on his own" in developing industry implementation costs for non-reactor facilities. The analyst should follow the general guidelines given in this Handbook section. Specific data may be best obtained through direct contact with knowledgeable sources for the facility concerned, possibly even the facility personnel themselves.

For a major effort beyond the standard analysis, the analyst should obtain very detailed information, in terms of the cost categories and the costs themselves. The analyst should seek guidance from NRC contractors or industry sources experienced in this area (AE firms, etc.). The incremental costs of the action should be defined at a finer level of detail. The analyst, should refer to the code of accounts in the Energy Economic Data Base (EEDB [United Engineers and Constructors, Inc. 1988b]) or Schulte et al. (1978) to prepare a detailed account of implementation costs.

5.7.7.1 Short-Term Replacement Power

For power reactors, the possibility that implementation of the proposed action may result in the need for short-term replacement power must be addressed. Section 4.3.2 of the Guidelines indicates that replacement power costs are to be incorporated into a regulatory analysis when appropriate. Unlike the long-term costs associated with severe power reactor accidents discussed in Section 5.7.6.2, the replacement power costs associated with industry implementation of a regulatory action would be short-term.

For a "typical" 910-MWe reactor operating at an average capacity factor of 60%-65%, VanKuiken et al. (1992) suggests $310,000/day (1993 dollars) as an average cost for short-term replacement power. The 60%-65% range in capacity factor is representative of annual averages, accounting for unplanned outage periods and planned outage periods for maintenance and refueling. However, if the timing of a short-term shutdown coincides with a time when a power reactor is expected to be fully operational, then a higher average cost per day is more appropriate. At a capacity factor of 100%, the average cost for the typical reactor is estimated to be $480,000/day (1993 dollars).

At a more detailed level, VanKuiken et al. (1992) project the seasonal replacement power costs for potential short-term shutdowns of 112 nuclear power plants over the five-year period from 1992 through 1996. These costs are estimated from probabilistic production-cost simulations of pooled utility-system operations. Average daily replacement power costs are presented by season for each of the 112 plants. The 20 U.S. power pools containing these plants are identified along with their following characteristics: total system capacity, annual peak load, annual energy demand, annual load factor, prices for fuels, and mix of generation by fuel type.

The sensitivity of replacement power costs to changes in oil and gas prices is quantified for each power pool. The effects of multiple plant shutdowns are addressed, with the replacement power costs quantified for each pool assuming all plants within the pool are shutdown.

The replacement power cost information compiled in an analogous but earlier study by VanKuiken et al. (1987) has subsequently been incorporated into two cost analysis computer codes. The Replacement Energy Cost Analysis Package (RECAP [VanKuiken et al. 1994]) determines the replacement energy costs associated with short-term shutdowns of nuclear power plants, and can be applied to determine average costs for general categories based on location, unit type (e.g., BWR), constructor, utility, and other differentiating criteria. Plant-specific costs are also available, and can be evaluated for user-specified outage durations and alternative capacity factor assumptions. FORECAST (Lopez and Sciacca 1996), a computer code for regulatory effects cost analysis, provides the user with the capability to estimate replacement power costs in current year dollars. Sciacca (1992) also provides a discussion and data for use in estimating replacement power costs based on this earlier study by VanKuiken et al. (1987).

Imposition of a new regulation often requires that a nuclear power plant be shutdown while the modification takes place. If the requirement is needed to meet adequate protection, the analyst can assume that the required downtime is independent of any scheduled downtime, thereby realizing full replacement power costs. However, the modification often is not needed to meet adequate protection, enabling it to be completed during already scheduled downtime. Only if the time needed to perform the modification exceeds that allotted for the scheduled downtime should any replacement power costs accrue, these being solely due to the excess time.

The most likely scenario permits the modification to be accommodated completely within already scheduled downtime, and this has frequently been the policy adopted by the NRC. As a result, no replacement power costs accrue. While this assumption holds for a modification performed in the absence of others required by new regulations, it tends to underestimate the cost of multiple modifications resulting from the cumulative effect of new NRC requirements. When multiple modifications are performed, as they often are, the originally scheduled downtime may be insufficient to accommodate all of them. Usually, this results from the limited number of available maintenance personnel and space restrictions for nearby component repair or service.

Historic data indicate roughly 15 days per year, or 17% and 25% of the annually scheduled downtime for PWRs and BWRs, respectively, can be attributed to the cumulative impact of new regulatory requirements. Assuming the contribution of each regulatory requirement to the incremental downtime equals the overall percentage increase, one can assign a prorated share to that requirement (i.e., 17% for PWRs, 25% for BWRs, or roughly 20% for LWRs in general). For example, if a regulatory requirement requires one-week of reactor shutdown time, 1.2 days (PWRs), 1.8 days (BWRs), or 1.4 days (LWRs) of additional downtime and, thus, replacement power costs would accrue.

5.7.7.2 Premature Facility Closing

Several nuclear power plants have been voluntarily shut down prior to the expiration of their operating licenses. Normally, a decommissioning cost of approximately \$0.3E+9 (1993 dollars) would be associated with an end-of-life shutdown (see Section 5.7.6.1). However, if a proposed regulatory requirement is expected to result in a premature shutdown, this cost is shifted to an earlier time with an associated net increase in its present value. For example, if a plant with an estimated t years of remaining life is prematurely closed, the net increase in present value, for a real discount rate of r, becomes (\$0.3E+9) $[1 - 1/(1+r)^t]$.

Thus, a plant closed 20 years early will incur an additional cost of \$0.2E+8 for a 7% real discount rate.

5.7.8 Industry Operation

This section provides procedures for estimating industry's incremental costs during the operating phase (i.e., after implementation) of the proposed action. The incremental costs measure the additional costs to industry imposed by the proposed action; they are costs that would not have been incurred in the absence of the action. Reduction in the net cost

(i.e., cost savings) is algebraically positive; increase (i.e., cost accrual) is negative (viewed as negative cost savings). Both NRC and Agreement State licensees should be addressed, as appropriate.

In general, there are three steps that the analyst should follow in order to estimate industry operation costs:

Step 1 - Estimate the amount and types of plant equipment, materials, and/or labor that will be affected by the proposed action.

Step 2 - Estimate the associated costs.

Step 3 - Discount the costs over the remaining lifetimes of the affected facilities, then sum (see Section B.2).

Costs incurred for operating and maintaining facilities may include, but are not limited to, the following:

- maintenance of land and land-use rights
- maintenance of structures
- operation and maintenance of hydraulic, pneumatic, and electrical equipment
- scheduled radioactive waste disposal and health physics surveys
- scheduled updates of records and procedures
- scheduled inspection and test of equipment
- scheduled recertification/retraining of facility personnel
- associated recurring administrative costs
- scheduled analytical updates.

The FORECAST computer code for regulatory effects cost analysis (Lopez and Sciacca 1996) allows user input for industry (licensee) operation costs.

For the standard analysis, the analyst should proceed as follows:

Step 1 - Estimate the amount and types of plant equipment, materials, and/or labor that will be affected by the proposed regulation, including professional staff time associated with reporting requirements and compliance activities. Possible impacts on a facility's capacity factor should be considered. The analyst may consult with engineering and costing experts, as needed. The analyst could seek guidance from NRC contractors, architect engineering firms, or utilities.

Step 2 - Estimate the associated operation and maintenance costs. The analyst should consider direct and indirect effects of the action; for example, the action could have an impact on plant labor, which, in turn, could affect administrative costs.

Step 3 - Discount the total costs over the remaining lifetime of the affected facilities (see Section B.2).

Much of the discussion on industry implementation costs in Section 5.7.7 for non-reactor facilities applies here for operation costs. Again, the analyst will generally not find consolidated cost information comparable to that for power reactors facilities. As before, Sections C.7-C.10 provide some limited data. However, the analyst may again need to rely on "engineering judgement," although specific data may be available through direct contact with cognizant industry/ contractor personnel.

For a major effort beyond the standard analysis, the analyst should seek specific guidance from contractor or industry sources experienced in this area. The user may wish to use contractors who have developed explicit methodologies for estimating operating and maintenance costs. The following references can provide useful information for industry operation costs: Budwani (1969); Carlson et al. (1977); Clark and Chockie (1979); Eisenhauer et al. (1982); EPRI (1986); NUS Corporation (1969); Phung (1978); Roberts et al. (1980); Stevenson (1981); and United Engineers and Constructors, Inc. (1979; 1988a, b).

5.7.9 NRC Implementation

Once a proposed action is defined and the Commission endorses its application, the NRC will incur costs to implement the action. Implementation costs refer to those "front-end" costs necessary to realize the proposed action. All costs associated with pre-decisional activities by the NRC are viewed as "sunk" costs and are excluded from the NRC implementation costs. Reduction in the net cost (i.e., cost savings) is algebraically positive; increase (i.e., cost accrual) is negative (viewed as negative cost savings).

Implementation costs to the NRC may arise from developing procedures, preparing aids, and taking other actions to assist in or assure compliance with the proposed action.[13] The analyst should determine whether the proposed action will be implemented entirely by the NRC or in cooperation with one or more Agreement States. Implementation costs shared by Agreement States may reduce those of the NRC and are discussed in Section 5.7.11.

NRC implementation costs include only the incremental costs resulting from adoption of the proposed action. Examples of these costs are as follows:

- developing guidelines for interpreting the proposed action and developing enforcement procedures
- preparing handbooks for use by the NRC staff responsible for enforcement and handbooks for use by others responsible for compliance
- supporting and reviewing a licensee's change in technical specifications
- conducting initial plant inspections to validate implementation.

Sciacca (1992) and the FORECAST computer code for regulatory effects cost analysis (Lopez and Sciacca 1996) assist the analyst in calculating these and "other" implementation costs. Implementation costs may include labor costs and overhead, purchases of equipment, acquisition of materials, and the cost of tasks to be carried out by outside contractors. Equipment and materials that would be eventually replaced during operation should be included under operating costs (see Section 5.7.10) rather than implementation costs.

Three steps are necessary for estimating NRC implementation costs:

Step 1 - Determine what steps the NRC must take to put the proposed action into effect.

Step 2 - Determine the requirements for NRC staff, outside contractors, materials, and equipment.

Step 3 - Estimate the costs of the required resources, discount if appropriate, then sum (see Section B.2).

Implementation is likely to affect a number of NRC branches and offices. For example, the Office of Nuclear Regulatory Research (RES) may develop a regulatory guide, the Office of Nuclear Reactor Regulation (NRR) may review any licensee submissions, and the NRC Regional Offices may inspect against some portion of the guide in operating facilities. In developing estimates for the implementation costs, the analyst is encouraged to contact all of the NRC components likely to be affected by the proposed action.

For the standard analysis, the analyst should identify the major tasks that must be performed to get the proposed rule implemented, major pieces of equipment (if any) that must be acquired, and major costs of materials. Major tasks are then assessed to estimate the approximate level of effort (in professional staff person-hours) necessary to complete them. The number of person-hours for each task is multiplied by the appropriate NRC labor rate and then summed over all of the tasks. In 1996 dollars, the average NRC labor rate (salary and benefits plus allocated agency management and support) is $67.50/person-hr.[14]

Similarly, the costs to complete tasks that would be contracted out also need to be estimated. In order to obtain a reasonably good approximation of contractor costs, the analyst should contact the NRC component that would be responsible for contracting for the tasks. Finally, the costs of major pieces of equipment and quantities of materials are added to the labor and contract costs.

When other data are unavailable, the analyst may assume as an approximation that for a non-controversial amendment to an existing rule or regulation implementation will require the following: a total of one professional NRC staff person-year at a cost of $122,000/person-year (in 1996 dollars), no additional equipment, and no additional materials. For a new rule or regulation, it is much more difficult to supply a rough but reasonable estimate of the implementation cost, because the level of effort and types and quantities of machinery and materials can vary dramatically. One recourse would be to use as a proxy the implementation costs for a recently adopted regulatory requirement that is similar to the proposed measure. The relative similarity of the two requirements should be judged with respect to the effort required to implement the proposed measure.

For a major effort beyond the standard analysis, a more detailed and complete accounting would be expected. The analyst can request the responsible NRC office to provide available information, such as paper submittals or records of initial inspections.

5.7.10 NRC Operation

After a proposed action is implemented, the NRC is likely to incur operating costs. These are the recurring costs that are necessary to ensure continued compliance. For example, adding a new regulation may require that NRC perform periodic inspections to ensure compliance. The analyst should determine whether operations resulting from the proposed action will be conducted entirely by the NRC or in cooperation with one or more Agreement States. Reduction in the net cost (i.e., cost savings) is algebraically positive; increase (i.e., cost accrual) is negative (viewed as negative cost savings).

There are three steps for estimating NRC operating costs:

Step 1 - Determine the activities that the NRC must perform after the proposed action is implemented.

Step 2 - Estimate NRC staff labor, contractor support and any special equipment and material required.

Step 3 - Estimate the costs of the required resources, discount (usually over the remaining lifetimes of the affected facilities, as for industry operation costs) to yield present value, then sum (see Section B.2).

In determining the required post-implementation activities, the analyst should carefully examine the proposed action, asking such questions as the following:

- How is compliance with the proposed action to be assured?
- Is periodic review of industry performance required?
- What is an appropriate schedule for such review?
- Does this action affect ongoing NRC programs, and, if so, will it affect the costs of those programs?

Since recurring costs attributable to the proposed action may be incurred by several NRC branches and offices, the analyst is encouraged to contact all of the NRC components likely to be affected. The FORECAST computer code for regulatory effects cost analysis (Lopez and Sciacca 1996) allows user input for NRC operation costs.

For the standard analysis, the analyst should obtain estimates of the number of full-time equivalent professional NRC staff person-hours that would be required to ensure compliance with the proposed rule. Each person-hour should be costed at $67.50/person-hr (in 1996 dollars) (refer to endnote 14). Major recurring expenditures for special equipment and materials, and for contractors, should be added. Since operating costs are recurring, they must be discounted as described in Section B.2, usually over the remaining lifetimes of the affected facilities.

A major effort beyond the standard analysis would proceed along the lines described above, except that greater detail would be provided to account for acquisitions of special equipment and materials.

5.7.11 Other Government

This attribute measures costs to the federal government (other than the NRC) and state (including Agreement State) and local governments. The discussion parallels that for NRC implementation and operation in Sections 5.7.9-5.7.10. Reduction in the net cost (i.e., cost savings) is algebraically positive; increase (i.e., cost accrual) is negative (viewed as negative cost savings).

Implementation costs to the federal (non-NRC) government and to state and local governments may arise from developing procedures, preparing aids, supporting license amendments, and taking action to assure compliance with the proposed action. For example, placing roadside evacuation route signs for the possibility of a radioactive release from a nearby power reactor would require expenditures from selected government agencies. As another example, requiring criminal investigation checks for nuclear reactor personnel may require resources of the Federal Bureau of Investigation. When estimating the implementation costs, the analyst should be aware that they may differ between Agreement and non-Agreement States. Such differences should be taken into account in preparing cost estimates.

Three steps are needed to estimate the other government implementation costs:

Step 1 - Determine what steps the other governments must take to put the proposed action into effect.

Step 2 - Determine the requirements for government staff, outside contractors, materials, and equipment.

Step 3 - Estimate the costs of the required resources, discount if appropriate, then sum (see Section B.2).

Implementation is likely to affect a number of government branches and offices. In developing estimates for the implementation costs, the analyst is encouraged to contact all of the government components likely to be affected by the proposed action. The FORECAST computer code for regulatory effects cost analysis (Lopez and Sciacca 1996) allows input for other government costs.

For the standard analysis, the analyst should identify the major tasks that must be performed to get the proposed rule implemented, major pieces of equipment (if any) that must be acquired, and major costs of materials. Major tasks are then assessed to estimate the approximate level of effort (in professional staff person-hours) necessary to complete them. The number of person-hours for each task is multiplied by the appropriate labor rate and then summed over all of the tasks.

Similarly, the costs to complete tasks that would be contracted out also need to be estimated. In order to obtain a reasonably good approximation of in-house and contractor costs, the analyst should contact the government agencies that would be responsible for carrying out or contracting for the tasks. Finally, the costs of major pieces of equipment and quantities of materials are added to the labor and contract costs.

After a proposed action is implemented, the federal (non-NRC) government and state and local governments may incur operating costs. These are the recurring costs that are necessary to ensure continued compliance. For example, adding a new regulation may require that other government agencies in addition to the NRC perform periodic inspections to ensure compliance. The analyst should determine whether operations resulting from the proposed action will be conducted entirely by the NRC or in cooperation with one or more other government agencies.

The three steps for estimating the other government operating costs are

Step 1 - Determine the activities that the other governments must perform after the proposed action is implemented.

Step 2 - Estimate government staff labor, contractor support, and any special equipment and material required.

Step 3 - Estimate the costs of the required resources, discount (usually over the remaining lifetimes of the affected facilities, as for NRC operation costs) to yield present value, then sum (see Section B.2).

In determining the required post-implementation activities, the analyst should carefully examine the proposed action, asking such questions as the following:

- Does compliance with the proposed action require non-NRC cooperation?
- Is periodic review of industry performance required beyond that of the NRC?
- What is an appropriate schedule for such review?
- Does this action affect ongoing government programs, and, if so, will it affect the costs of those programs?

Since recurring costs attributable to the proposed action may be incurred by several government branches and offices, the analyst is encouraged to contact all components likely to be affected.

For the standard analysis, the analyst should obtain estimates of the number of full-time equivalent professional staff person-hours that would be required to ensure compliance with the proposed rule. Each person-hour should be costed at the appropriate labor rate (an average NRC labor rate of $67.50/person-hr [in 1996 dollars] maybe used as a substitute if no more specific value is available [refer to endnote 14]). Major recurring expenditures for special equipment and materials, and for contractors, should be added. Since operating costs are recurring, they must be discounted as described in Section B.2, usually over the remaining lifetimes of the affected facilities.

A major effort beyond the standard analysis would proceed along the lines described above, except that a more detailed and complete accounting would be expected. The analyst could request the responsible government agencies to provide available information.

5.7.12 General Public

This attribute measures costs incurred by members of the general public, other than additional taxes, as a result of implementation of a proposed action. Taxes are viewed simply as transfer payments with no real resource commitment from a societal perspective. Reduction in the net cost (i.e., cost savings) is algebraically positive; increase (i.e., cost accrual) is negative (viewed as negative cost savings).

Typically, costs to the general public cover such items as increased cleaning due to dust and construction-related pollutants, property value losses, or inconveniences, such as testing of evacuation sirens. Care must be taken not to double count for general public and other government costs. If a cost could be assigned to either group, it should be assigned where more appropriate, the analyst remembering not to account for it again in the other attribute.

The two steps to estimate costs to the general public are as follows:

Step 1 - Identify the adverse impacts incurred by the general public to implement the proposed action.

Step 2 - Estimate the costs associated with these adverse impacts, discount if appropriate, then sum (see Section B.2).

This attribute is not expected to be one commonly affected by regulatory actions. However, if relevant, the standard analysis would require the analyst to identify the major activities to implement the proposed action that will result in adverse impacts to the general public. Public records or analogous experience from other communities could be used as information sources to estimate the costs to the general public.

5.7.13 Improvements in Knowledge

This attribute relates primarily to proposals for conducting assessments of the safety of licensee activities. At least four major potential benefits are derived from the knowledge produced by such assessments:

- improvements in the materials used in nuclear facilities
- improvement or development of safety procedures and devices
- production of more robust risk assessments and safety evaluations, reducing uncertainty about the relevant processes

- improvement in regulatory policy and regulatory requirements.

To the extent that the effects of regulatory actions can be quantified, they should be treated under the appropriate quantitative attributes. On the other hand, if the effects from the assessments are not easily quantified, the analyst still has the burden of justifying the effort and providing some indication of its effect. If necessary, this justification would be expressed qualitatively under this attribute. An effort should be made to identify the types of values and impacts that are likely to accrue and to whom.

Consider the following statement:

> This assessment effort has a reasonable prospect of reducing our uncertainty regarding the likelihood of containment failure resulting from hydrogen burning. Such an accident may be a significant source of risk. The knowledge from the proposed assessments would enable us to assess more accurately the overall accident risk posed by nuclear reactors, and this in turn should benefit the public through better policy decisions.

While this statement describes why the proposed assessment is needed, no information is provided for evaluating the merits of the proposed assessment.

Providing answers to the following questions would help to fill this information gap:

- What are the likely consequences of a hydrogen-burning accident?
- To what extent would the proposed assessment reduce the uncertainty in the likelihood of a hydrogen-burning accident?
- Given our current information, what is the contribution of hydrogen burning to overall accident risk?

The above questions are specific to a particular topic. For the broader problem of providing a value-impact analysis of an assessment proposal, it is recommended that the analyst be responsive to the following list of more general questions:

- What are the objectives?
- If the assessment is successful in meeting its objectives, what will be the social benefits?
- Is there a time constraint on the usefulness of the results?
- Who will benefit from the results, by how much, and when?
- What is the likelihood that the assessment will fail to meet its objectives within the time and budget constraints?
- What will be the social costs (and benefits) if the assessment is not successful, or if the assessment is not undertaken?

5.7.14 Regulatory Efficiency

Regulatory efficiency is an attribute that is frequently difficult to quantify. If it can be quantified, it should be included under one or more of the other quantifiable attributes. If quantification is not practical, regulatory efficiency can be treated in a qualitative manner under this attribute. For example achieving consistency with international standards groups may increase regulatory efficiency for both the NRC and the groups. However, this increase may be difficult to quantify.

If necessary, this justification would be expressed qualitatively under this attribute. An effort should be made to identify the types and recipients of values and impacts likely to accrue. If the proposed NRC action is expected to have major effects on regulatory efficiency, then a proper evaluation of these effects may require a level of effort commensurate with their magnitude. This may mean expending resources to obtain the judgments of experts outside of the NRC if the necessary expertise is not available in-house.

To obtain useful information, the analyst can solicit expert opinion in a number of ways. A general discussion of those methods and others is found in Quade (1975), especially Chapter 12, "When Quantitative Models are Inadequate." One way is to convene the experts in a round-table discussion with the objective of reaching a consensus. This technique has some of the drawbacks of a committee meeting--often the assumptions are not made explicit, and strong-willed (or strong-voiced) individuals often carry undue weight.

Another way of pooling expert opinion in a systematic manner is to use one of the numerous procedures for iterative group decision-making. For example, the Delphi technique (Dalkey and Helmer 1963; Humphress and Lewis 1982) is a procedure that features an anonymous exchange of information or expert opinion. This approach is designed to encourage the modification of earlier answers by each expert so that a group consensus can be achieved. Even if consensus is not achieved, information is produced that allows the analyst to compile statistical estimates of the responses.

Whether the assessment is performed by a panel of experts or by the analyst, the following are questions that might be considered in order to focus on that assessment:

- Does this action conflict with any other NRC/federal/state directives?
- Are there any nuclear facilities for which (or conditions under which) this action might have unexpected or undesirable consequences?
- Do you foresee any major enforcement problems with this action or regulation?
- What sort of adjustments might industry undertake to avoid the regulation's intended effects?
- How will the regulation impact productivity in the nuclear/electric utility industries?
- How will this action affect facility licensing times?
- How will this action affect the regulatory process within the NRC (and/or other regulatory agencies)?

5.7.15 Antitrust Considerations

This qualitative attribute is not expected to be one commonly affected by regulatory actions. However, the NRC does have a legislative mandate in Section 105 of the Atomic Energy Act to uphold the antitrust laws. Thus, this attribute can be relevant for those proposed actions which may potentially violate the antitrust laws. If applicable, antitrust considerations should be explored with the NRC Office of the General Counsel early in the analysis to preclude analyzing an issue clearly in conflict with these laws. If antitrust considerations are involved, and it is determined that antitrust laws would be violated, then the proposed action must be reconsidered and, if necessary, redefined to preclude such violation.

5.7.16 Safeguards and Security Considerations

Safeguards and security considerations include protection of the common defense and security and safeguarding restricted data and national security information. In more practical terms, this means providing adequate physical security and safeguards systems to prevent the diversion of certain types of fissionable and radioactive materials, the perpetration of acts of radiological sabotage, and the theft by unauthorized individuals of restricted data or national security information.

The NRC has a legislative mandate in the Atomic Energy Act to assure the objectives mentioned above. Through its regulations and regulatory guidance, the NRC has established a level of protection deemed to satisfy the legislative mandate. As is the case for adequate protection of the health and safety of the public, this level of protection must be maintained without consideration of cost.

While quantification of safeguards and security changes may be difficult, the analyst should attempt quantification when feasible. If this process is impossible, the analyst may proceed with a qualitative analysis under this attribute. Section 5.7.14, where methods of evaluating expert opinion are discussed, may be helpful.

5.7.17 Environmental Considerations

Section 102 of the National Environmental Policy Act (NEPA) requires federal agencies to consider environmental impacts in the performance of their regulatory missions. NRC's regulations implementing NEPA are in 10 CFR Part 51. Any documentation prepared to satisfy NEPA and Part 51 should be coordinated with any regulatory analysis documentation covering the same or similar subject matter as much as possible.

Environmental impacts can have monetary effects (e.g., environmental degradation, mitigation measures, environmental enhancements), which could render potential alternative actions unacceptable or less desirable than others. Therefore, at a minimum, such effects should be factored into the value-impact analysis, at least to the extent of including a summary of the results of the environmental analysis.

Many of the NRC's regulatory actions are subject to categorical exclusions as set forth in 10 CFR 51.22. In these cases, detailed environmental analyses are not performed, and there will be no environmental consideration to factor into the regulatory analysis. In some cases, a generic or programmatic environmental impact statement (EIS) is prepared. If such is the case, Section 5.3 of the Guidelines allows portions of the EIS to be referenced in lieu of performing certain elements of the regulatory analysis. In the remaining cases, it may be that the regulatory analysis alternative being considered will initiate the requirement for review of environmental effects. For purposes of the regulatory analysis document, the preferred approach to be used in this situation is to perform a preliminary environmental analysis, identifying in general terms anticipated environmental consequences and potential mitigation measures. The results of this preliminary analysis should be quantified under the appropriate quantitative attributes, if possible, or addressed qualitatively under this attribute, if not quantified.

5.7.18 Other Considerations

There may be other considerations associated with a particular proposed action that are not captured in the preceding descriptions. Possible examples might include the way in which the proposed action meets specific requirements of the Commission, EDO, or NRC office director that requested the regulatory analysis; the way in which the proposed action would help achieve NRC policy; or advantages or detriments that the proposed action would have for other NRC programs and actions. If quantifiable, the effect should be included in essentially the same way as in the quantitative attributes. Because such considerations would be expected to be unusual, some additional discussion in the regulatory analysis document should be provided.

The analyst needs to give thoughtful consideration to the possible effects of the proposed action. Some of the effects may not be immediately obvious. The analyst may wish to consult with other knowledgeable individuals to aid in the identification of all significant effects. These considerations need to be presented clearly to facilitate the reader's understanding of the issues.

When quantification of effects is not feasible, the analyst may still be able to provide some indication of the magnitude to facilitate comparison among alternatives, and comparison with quantifiable attributes. Comparative language (greater than, less than, about equal to) can be very helpful in achieving this objective, as long as the analyst can make the necessary judgements. Consultation with experts or other knowledgeable individuals may be required.

5.8 Summarization of Value-Impact Results

Having completed the value-impact analysis for one or more alternatives of the proposed action, the analyst should summarize the results for each alternative using a summary table such as that shown as Figure 5.1. Such a tabular

Title of Proposed Action / Date

Summary of Problem and Proposed Solution:

Quantitative attribute			Present value estimates ($)		
			Low[a]	Best[b]	High[c]
Health	Public	Accident			
		Routine			
	Occupational	Accident			
		Routine			
Property	Offsite				
	Onsite				
Industry	Implementation				
	Operation				
NRC	Implementation				
	Operation				
Other Government					
General Public					
NET VALUE (Sum)					

(a) Low estimates correspond to the worst case, i.e., highest costs and lowest benefits, relative to the baseline case.
(b) Best estimates are normally the expected value, but could be other point estimates such as the mean or median (see Section 4.3 of the Guidelines).
(c) High estimates correspond to lowest cost estimates and highest benefit estimates.

Comments: Discuss any other attributes considered, compliance with Safety Goal guidance, special considerations, etc.

Figure 5.1 Summary of value-impact results

presentation provides a uniform format for recording the results of the evaluation of all quantitative attributes plus a comments section to discuss other attributes considered, compliance with the Safety Goal guidance, special considerations, etc. It displays the results for the net-value measure, discussed in Section 5.2.

All dollar measures should be present valued and expressed in terms of the same year. This may require conversion of some dollar values from whatever years in which they have been expressed to one common year. Sciacca (1992) describes techniques for these conversions. The Gross Domestic Product (GDP) price deflator can be used to convert historical nominal dollars to dollars of one common year. Financial publications, such as *National Economic Trends* by the Federal Reserve Bank of St. Louis, supply implicit price deflators for the GDP, through the current year. GDP price deflator information from the Federal Reserve Bank of Chicago is also available at the following Internet address: http://gopher.great-lakes.net:2200/0/partners/ChicagoFed/econind/.

When recording the low and high estimates for an attribute, the analyst should generally record the lowest and highest estimates if multiple estimates are made. For example, suppose the analyst calculated a best estimate of -$5.0E+5 for NRC implementation cost (the negative value indicates the cost will be an expense rather than a savings). The analyst then performed two separate sensitivity analyses, obtaining the following sets of low (more negative) and high (less negative) estimates:

	Low Estimate	High Estimate
Sensitivity A	-$7.5E+5	-$2.5E+5
Sensitivity B	-$1.0E+6	-$3.0E+5

The analyst should record the lowest (most negative) and highest (least negative) estimates in Figure 5.1 (i.e., -$1.0E+6 and -$2.5E+5, respectively), even though each comes from a different sensitivity analysis.

The net value is the required value-impact measure (see Section 5.2). Its calculation is the sum of the present value of all the quantitative attributes. Information on computing present value is in Section B.2. A positive net value result indicates an overall cost savings for the proposed action. A negative net value result indicates the opposite. As mentioned in Section 5.2, the net value is an absolute measure, reflecting the magnitude of the proposed action's contribution toward the specified goals. The results of the value-impact assessment can be displayed as a ratio and in tables and/or graphs, in addition to a summary table for additional perspectives.

5.9 Endnotes for Chapter 5

1. Section 4.4 of the Guidelines allows the analyst to display the results of a value-impact analysis as a ratio of values to impacts, all expressed in dollars. The numerator would sum the estimates for all quantifiable attributes classified as values, while the denominator would do likewise for impacts. Section 4.4 of the Guidelines views a value-impact ratio as supplemental to the net value, not as a replacement.

2. The term "equation" is loosely used to indicate anything from a single mathematical expression (e.g., one for a major fire at a non-reactor facility) to a complete computer analysis (e.g., a core damage assessment for a power reactor).

3. The double index notation indicates that an initiating event j can lead to several accident sequences i.

4. Level 1 analyses generally produce a list of core-damage accident sequences, together with the overall core-damage accident frequency as their final product. Level 2 analyses take the Level 1 analyses one step further by evaluating the containment response to the accident sequences and the associated containment release magnitudes. Level 3 analyses take the Level 2 analyses one step further by evaluating the public risk associated with the containment release frequencies and magnitudes. As a result, Level 3 analyses are the preferred tools for evaluating the effect of a proposed action on public risk.

5. Developed by the Southwest Research Institute, San Antonio, Texas.

6. An error factor f is used as follows to estimate upper and lower bounds, presuming a positive value for the best estimate:

   Upper Bound = Best Estimate x f
   Lower Bound = Best Estimate / f

7. As discussed in Section 5.7.1.1, public health (accident) may be affected through a mitigation of consequences instead of (or as well as) a reduction in accident probability.

8. Andrews et al. (1983) provide a conceptual discussion of assessing the risk for this type of proposed action.

9. The equations included in this Handbook (e.g., Section 5.7.1.3) apply a discounting term to doses associated with both implementation and operational impacts. In practice, the implementation dose may be of such short duration that discounting is not necessary. Its inclusion here is in recognition that, in some cases, implementation may extend over a longer period than one year.

10. NRC has required its contractors to estimate onsite dose rates in the Surry and Grand Gulf risk assessments during low power and shutdown operations (Brown et al. 1992; Jo et al. 1992).

11. Based on ANL estimates, a cleanup period as long as 10 years may be needed following a major power reactor accident (see Section 5.7.6.1). Long-term doses will occur over some portion of this time.

12. Accidents at non-reactor nuclear facilities could also lead to the need for replacement services of the same type provided by the facility where the accident occurred.

13. NRC implementation costs associated with facility closure may be increased if the facility closes prematurely (see Section 5.7.7.2).

14. The $67.50 hourly rate is derived from June 1996 data and the technique described in Abstract 5.2 of Sciacca (1992).

6 References

Andrae, R., et al. 1985. *TORAC User's Manual - A Computer Code for Analyzing Tornado-Induced Flow and Material Transport in Nuclear Facilities*. NUREG/CR-4260, Los Alamos National Laboratory, Los Alamos, New Mexico.

Andrews, W., et al. 1983. *Guidelines for Nuclear Power Plant Safety Issue Prioritization Information Development*. NUREG/CR-2800, Pacific Northwest National Laboratory, Richland, Washington.

Andrews, W., et al. 1985. *Guidelines for Nuclear Power Plant Safety Issue Prioritization Information Development*. NUREG/CR-2800, Supplement 3, Pacific Northwest National Laboratory, Richland, Washington.

Ayer, J., et al. 1988. *Nuclear Fuel Cycle Facility Accident Analysis Handbook*. NUREG-1320, U.S. Nuclear Regulatory Commission, Washington, D.C.

Baker, D. 1995. *Dose Commitments Due to Radionuclide Release from Nuclear Power Plant Sites in 1991*. NUREG/CR-2850, Vol. 13, Pacific Northwest National Laboratory, Richland, Washington.

Beal, S., et al. 1987. *Data Base of System-Average Dose Rates at Nuclear Power Plants*. NUREG/CR-5035, Science and Engineering Associates, Inc., Albuquerque, New Mexico.

Bell, B., and A. Swain. 1983. *A Procedure for Conducting a Human Reliability Analysis for Nuclear Power Plants*. NUREG/CR-2254, Sandia National Laboratories, Albuquerque, New Mexico.

Beres, D. 1990. *The Clean Air Act Assessment Package - 1988 (CAP-88): A Dose and Risk Assessment Methodology for Radionuclide Emissions to Air*. SC&A, Inc., McLean, Virginia.

Berman, L., et al. 1978. *Analysis of Some Nuclear Waste Management Options, Vol. 1: Analysis and Interpretation*. UCRL-13913, University of California Radiation Laboratory, Berkeley, California.

Bierschbach, M. 1995. *Estimating Pressurized Water Reactor Decommissioning Costs: A User's Manual for the PWR Cost Estimating Computer Program (CECP) Software*. NUREG/CR-6054, Pacific Northwest National Laboratory, Richland, Washington.

Bierschbach, M. 1996. *Estimating Boiling Water Reactor Decommissioning Costs: A User's Manual for the BWR Cost Estimating Computer Program (CECP) Software*. NUREG/CR-6270, Pacific Northwest National Laboratory, Richland, Washington.

Blanton, C., and S. Eide. 1993. *Savannah River Site Generic Data Base Development*. WSRC-TR-93-262, Westinghouse Savannah River Co., Aiken, South Carolina.

Breeding, R., et al. 1990. *Evaluation of Severe Accident Risks: Surry Unit 1*. NUREG/CR-4551, Vol. 3, Sandia National Laboratories, Albuquerque, New Mexico.

Brown, J., et al. 1990. *Value-Impact Assessment of Jet Impingement Loads and Pipe-to-Pipe Impact Damage*. NUREG/CR-5579, Pacific Northwest National Laboratory, Richland, Washington.

Brown, T., et al. 1990. *Evaluation of Severe Accident Risks: Grand Gulf Unit 1*. NUREG/CR-4551, Vol. 6, Sandia National Laboratories, Albuquerque, New Mexico.

Brown, T., et al. 1992. "Summary of an Abridged Assessment of Shutdown Risk for a Mark III Boiling Water Reactor." *Transactions of the 20th Water Reactor Safety Information Meeting*, NUREG/CP-0125, U.S. Nuclear Regulatory Commission, Washington, D.C., pp. 16-1,2.

Budwani, R. 1969. "Power Plant Capital Cost Analysis." *Power Engineering*. 84(5)62-70.

Buehring, W., and J. Peerenboom. 1982. *Loss of Benefits Resulting from Nuclear Power Plant Outages, Volume 1: Main Report*. NUREG/CR-3045, U.S. Nuclear Regulatory Commission, Washington, D.C.

Burke, R., et al. 1984. *Economic Risks of Nuclear Power Reactor Accidents*. NUREG/CR-3673, Sandia National Laboratories, Albuquerque, New Mexico.

Call, A., et al. 1985. *LaSalle County Station Probabilistic Safety Analysis*. NEDO-31085, Class I, General Electric Co.

Carlson, W., et al. 1977. *Analysis of Coal Option*. Vol II of *Comparative Study of Coal and Nuclear Generating Options for the Pacific National Northwest*. WPPSS FTS-028-II, Fuel and Technical Studies Department, Washington Public Power Supply System, Richland, Washington.

Chanin, D., et al. 1990. *MELCOR Accident Consequence Code Systems (MACCS): User's Guide*. NUREG/CR-4691, Sandia National Laboratories, Albuquerque, New Mexico.

Chanin, D., et al. 1993. *MACCS Version 1.5.11.1: A Maintenance Release of the Code*. NUREG/CR-6059, Sandia National Laboratories, Albuquerque, New Mexico.

Clark, L., and A. Chockie. 1979. *Fuel Cycle Cost Projections*. NUREG/CR-1041, Pacific Northwest National Laboratory, Richland, Washington.

Cohen, S., and R. Dance. 1975. *Scoping Assessment of the Environmental Health Risk Associated with Accidents in the LWR Supporting Fuel Cycle*. Contract No. 68-01-2237, performed by Teknekron, Inc., 4701 Sangamore Road, Washington, D.C. 20016.

Comer, M., et al. 1984. *Generating Human Reliability Estimates Using Expert Judgment*. NUREG/CR-3688, General Physics Corporation, Columbia, Maryland; and The Maxima Corporation, Bethesda, Maryland.

Cooperstein, R., et al. *Hazards Analysis of a Generic Fuel Reprocessing Facility*. SAI/SR-113-PA, Science Applications, Inc., Palo Alto, California.

Daling, P., et al. 1990. *Preliminary Characterization of Risks in the Nuclear Waste Management System Based on Information in the Literature*. PNL-6099, Pacific Northwest National Laboratory, Richland, Washington.

Dalkey, N., and O. Helmer. 1963. "An Experimental Application of the Delphi Method to the Use of Experts." *Management Science*. 9(3).

Davis, R., et al. 1995. *Reassessment of Selected Factors Affecting Siting of Nuclear Power Plants*. BNL-NUREG-52442, Brookhaven National Laboratory, Upton, New York.

Dexter, A., and W. Perkins. 1982. *Component Failure Rate Data with Potential Applicability to a Nuclear Fuel Reprocessing Plant.* DP-1633, E.I. duPont de Nemours & Co., Aiken, South Carolina.

Durant, W., et al. 1988. "Data Bank for Probabilistic Risk Assessment of Nuclear Fuel Reprocessing Plants." *IEEE Transactions on Reliability*, vol. 37, no. 2, pp. 138-143.

Eisenhauer, J., et al. 1982. *Electric Energy Supply Systems Comparison and Choices Volume I: Technology Description Report.* PNL-3277, Pacific Northwest National Laboratory, Richland, Washington.

Elder, H. 1981. *An Analysis of the Risk of Transporting Spent Nuclear Fuel by Train.* PNL-2682, Battelle Pacific Northwest National Laboratories, Richland, Washington.

Electric Power Research Institute (EPRI) and Duke Power Co. 1984. *Oconee Probabilistic Risk Assessment.* NSAC-60, Electric Power Research Institute, Palo Also, California.

Electric Power Research Institute (EPRI). 1986. *Technical Assessment Guide.* EPRI-P-4463-SR, Electric Power Research Institute, Palo Alto, California.

Erdmann, R., et al. 1979. *Status Report on the EPRI Fuel Cycle Accident Risk Assessment.* EPRI NP-1128, Science Applications, Inc., Palo Alto, California.

Ernst, M. 1984. "Probabilistic Risk Assessment (PRA) and Decision-Making Under Uncertainty," *Proceedings of the 9th Annual Statistics Symposium on National Energy Issues* (NUREG/CP-0053). Los Alamos National Laboratory, Los Alamos, New Mexico.

Fullwood, R., and R. Jackson. 1980. *Actinide Partitioning-Transmutation Program Final Report VI, Short-Term Risk Analysis of Reprocessing, Refabrication, and Transportation.* SAI-099-78-PA, Science Applications, Inc., Palo Alto, California.

Gertman, D., et al, 1988. *Nuclear Computerized Library for Assessing Reactor Reliability (NUCLARR).* NUREG/CR-4639, EG&G Idaho, Idaho Falls, Idaho.

Gregory, J., et al. 1990. *Evaluation of Severe Accident Risks: Sequoyah Unit 1.* NUREG/CR-4551, Vol. 5, Sandia National Laboratories, Albuquerque, New Mexico.

Gregory, J. 1995. *NUREG-0933: Update of Exhibit B.* Letter report from J. J. Gregory, Sandia National Laboratory, to Jack Guttman, U.S. Nuclear Regulatory Commission, June 5, 1995.

Hamby, D. 1993. *A Review of Sensitivity Analysis Techniques.* WSRC-MS-93-576, Westinghouse Savannah River Co., Aiken, South Carolina.

Hatch, S., et al. 1981. *Reactor Safety Study Methodology Applications Program: Grand Gulf No. 1 BWR Power Plant.* NUREG/CR-1659/4, Sandia National Laboratories, Albuquerque, New Mexico.

Hatch, S., et al. 1982. *Reactor Safety Study Methodology Applications program: Calvert Cliffs No. 2 PWR Power Plant.* NUREG/CR-1659/3 (Rev. 1), Sandia National Laboratories, Albuquerque, New Mexico.

Heaberlin, S., et al. 1983. *A Handbook for Value-Impact Assessment*. NUREG/CR-3568, Pacific Northwest National Laboratory, Richland, Washington.

Hodge, C., and A. Jarrett. 1974. *Transportation Accident Risks in the Nuclear Power Industry: 1975-2000.* EPA-520/3-75-023, Holmes and Narver, Inc.

Humphress, G., and E. Lewis. 1982. *A Value Assessment Aid to Complex Decision Making*. NP-2507, Research Project 1391-4, Southwest Research Institute, San Antonio, Texas.

Humphreys, S. 1995. *SECPOP90: Sector Population, Land Fraction, and Economic Data Estimating Program Users Manual*. Sandia National Laboratories, Albuquerque, New Mexico.

Iman, R. and J. Helton. 1988. "An Investigation of Uncertainty and Sensitivity Analysis Techniques for Computer Models." *Risk Analysis,* 8(1):71-90.

Iman, R., and M. Shortencarier. 1986. *A User's Guide for the Top Event Matrix Analysis Code (TEMAC)*. NUREG/CR-4598, Sandia National Laboratories, Albuquerque, New Mexico.

Jo, J., et al. 1989. *Value-Impact Analysis of Accident Preventive and Mitigative Options for Spent Fuel Pools.* NUREG/CR-5281, Brookhaven National Laboratory, Upton, New York.

Jo, J., et al. 1992. "Analysis of Accidents During the Mid-Loop Operating State at a PWR." *Transactions of the 20th Water Reactor Safety Information Meeting*, NUREG/CP-0125, U.S. Nuclear Regulatory Commission, Washington, D.C., pp. 16-3,4.

Karn-Bransle-Sakerhat (KBS). 1977. *Handling of Spent Nuclear Fuel and Final Storage of Vitrified High Level Reprocessing Waste, Vol. IV, Safety Analysis.*

Kolb, G., et al. 1981. *Reactor Safety Study Methodology Applications Program: Oconee No. 3 PWR Power Plant*. NUREG/CR-1659/2 (Rev. 1), Sandia National Laboratories, Albuquerque, New Mexico.

Konzek, G., and R. Smith. 1990. *Re-evaluation of the Cleanup Cost for the BWR Scenario 3 Accident from NUREG/CR-2601*. NUREG/CR-2601, Addendum 1, Pacific Northwest National Laboratory, Richland, Washington.

LaGuardia, T., et al. 1986. *Guidelines for Producing Commercial Nuclear Power Plant Decommissioning Cost Estimates.* AIF/NESP-036, Atomic Industrial Forum, Washington D.C.

Lopez, B., and F. Sciacca. 1996. *FORECAST: Regulatory Effects Cost Analysis Software Manual, Version 4.1.* NUREG/CR-5595 Rev.1, Science and Engineering Associates, Inc., Albuquerque, New Mexico.

McCormick, N. 1981. *Reliability and Risk Analysis, Methods and Nuclear Power Applications*. Academic Press, New York.

McGuire, S. 1988. *A Regulatory Analysis of Emergency Preparedness for Fuel Cycle and Other Radioactive Material Licensees*. NUREG-1140, Division of Reactor Accident Analysis, U.S. Nuclear Regulatory Commission, Washington, D.C.

Mishima, J., et al. 1983. *Cost-Benefit Analysis of Unfired PuO_2 Pellets as an Alternative Plutonium Shipping Form.* NUREG/CR-3445, Pacific Northwest National Laboratory, Richland, Washington.

Morgan, M. and M. Henrion. 1990. "Uncertainty: A Guide to Dealing with Uncertainty in Quantitative Risk and Policy Analysis." *Cambridge University Press,* Cambridge, Massachusetts.

Mubayi, V. 1994. *MACCS Update for NUREG-1150.* Letter report from V. Mubayi, Brookhaven National Laboratory to Arthur J. Buslik, U.S. Nuclear Regulatory Commission, July 20, 1994.

Mubayi, V., et al. 1995. *Cost-Benefit Considerations in Regulatory Analysis.* NUREG/CR-6349, Brookhaven National Laboratory, Upton, New York.

Murphy, E., and G. Holter. 1982. *Technology, Safety and Costs of Decommissioning Reference Light Water Reactors Following Postulated Accidents.* NUREG/CR-2601, Pacific Northwest National Laboratory, Richland, Washington.

Napier, B., et al. 1988. *GENII-The Hanford Environmental Radiation Dosimetry Software System*, PNL-6584, Pacific Northwest National Laboratory, Richland, Washington.

National Research Council, Committee on the Biological Effects of Ionizing Radiation (BEIR V). 1990. *Health Effects of Exposure to Low Levels of Ionizing Radiation.* National Academy of Science Press, Washington, D.C.

Nichols, B., and W. Gregory. 1986. *FIRAC User's Manual: A Computer Code to Simulate Five Accidents in Nuclear Facilities.* NUREG/CR-4561, Los Alamos National Laboratory, Los Alamos, New Mexico.

Nichols, B., and W. Gregory. 1988. *EXPAC User's Manual: A Computer Code to Simulate Explosive Accidents in Nuclear Facilities.* Los Alamos National Laboratory, Los Alamos, New Mexico.

Nourbakhsh, H. 1992. *Representative Source Terms for Severe LWR Accidents.* Letter report prepared for the U.S. Nuclear Regulatory Commission's Office of Nuclear Regulatory Research, June 16, 1992.

NUS Corporation. 1969. *Guide for Economic Evaluation of Nuclear Reactor Plant Designs.* NUS-531, NUS Corporation, Rockville, Maryland.

Office of Management and Budget (OMB). 1992. "Circular A-94 - Guidelines and Discount Rates for Benefit-Cost Analysis of Federal Programs," *Federal Register*, Vol. 57, November 10, 1992, pp. 53519-53528. Available online at URL: http://www1.whitehouse.gov/WH/EOP/OMB/html/circular.html.

Ostmeyer, R., and D. Skinner. 1987. *A Preliminary Evaluation of the Economic Risk for Cleanup of Nuclear Material Licensee Contamination Incidents.* NUREG/CR-4825, Sandia National Laboratories, Albuquerque, New Mexico.

Park, C., et al. 1990. *Evaluation of Severe Accident Risks: Zion Unit 1.* NUREG/CR-4551, Vol. 7, Brookhaven National Laboratory, Upton, New York.

Parks, B. 1992. *User's Guide for CAP88-PC.* 402-B-92-001, U.S. Environmental Protection Agency, Las Vegas, Nevada.

Payne, A., et al. 1990. *Evaluation of Severe Accident Risks: Peach Bottom Unit 2.* NUREG/CR-4551, Vol. 4, Sandia National Laboratories, Albuquerque, New Mexico.

Payne, A. 1992. *Analysis of the LaSalle Unit 2 Nuclear Power Plant: Risk Methods Integration and Evaluation Program (RMIEP)*. NUREG/CR-4832, Sandia National Laboratories, Albuquerque, New Mexico.

Philbin, J., et al. 1990. *Economic Risk of Contamination Cleanup Costs Resulting from Large Non-Reactor Nuclear Material Licensee Operations*. NUREG/CR-5381, Sandia National Laboratories, Albuquerque, New Mexico.

Phung, D. 1978. *A Method for Estimating Escalation and Interest During Construction (EDC and IDC)*. ORAU IEA-78-7(M), Institute for Energy Analysis, Oak Ridge Associated Universities, Oak Ridge, Tennessee.

Portland General Electric Co. 1995. *Trojan Nuclear Plant Decommissioning Plan*. PGE-1061. Portland General Electric Co., Portland, Oregon.

Power Authority of the State of New York (PASNY) and Consolidated Edison Co. of New York, Inc. 1982. *Indian Point Probabilistic Safety Study*. New York.

Projekt Sicherkeitsstudien Entsorgung (PSE). 1981. *Zusammenfassender Zwischenbericht (Project on Safety Studies at the Backend of the Fuel Cycle--Combined Interim Report)*.

Quade, E. 1975. *Analysis for Public Decisions*. Elsevier, New York.

Raddatz, C., and D. Hagemeyer. 1995. *Occupational Radiation Exposure at Commercial Nuclear Power Reactors and Other Facilities, 1993, Twenty-Sixth Annual Report*. NUREG-0713, Vol. 15, Office of Nuclear Regulatory Research, U.S. Nuclear Regulatory Commission, Washington, D.C.

Regulatory Working Group (RWG). 1996. *Economic Analysis of Federal Regulations Under Executive Order No. 12866*, (Online report). Available at URL: http://www1.whitehouse.gov/WH/EOP/OMB/html/miscdoc/riaguide.html.

Riordan, B. 1986. *Labor Productivity Adjustment Factors*. NUREG/CR-4546, Science and Engineering Associates, Inc., and Mathtech, Inc., Albuquerque, New Mexico.

Ritchie, L., et al. 1985. *Calculation of Reactor Accident Consequences, Version 2, CRAC2: Computer Code User's Guide*. NUREG/CR-4185, Sandia National Laboratories, Albuquerque, New Mexico.

Robert Snow Means Co., Inc. 1995. *Building Construction Cost Data 1996*. 54th annual edition. Robert Snow Means Co., Inc., Kingston, Massachusetts.

Roberts, J., et al. 1980. *Treatment of Inflation in the Development of Discount Rates and Levelized Costs in NEPA Analyses for the Electric Utility Industry*. NUREG-0607, U.S. Nuclear Regulatory Commission, Office of Nuclear Reactor Regulation, Washington, D.C.

Russell, K., and M. Sattison. 1988. *Integrated Reliability and Risk Analysis System (IRRAS) User's Guide--Version 2.0*. NUREG/CR-5111, EG&G Idaho, Idaho Falls, Idaho.

Samanta, P., et al. 1981. *Sensitivity of Risk Parameters to Human Errors in Reactor Safety Study for a PWR*. NUREG/CR-1879, Brookhaven National Laboratory, Upton, New York.

Samanta, P., et al. 1989. *Risk Sensitivity to Human Error*. NUREG/CR-5319, Brookhaven National Laboratory, Upton, New York.

Schneider, K., et al. 1982. *Nuclear Fuel Cycle Risk Assessment: Descriptions of Representative Non-Reactor Facilities.* NUREG/CR-2873, Pacific Northwest National Laboratory, Richland, Washington.

Schulte, S., et al. 1978. *Fusion Reactor Design Studies - Standard Accounts for Cost Estimates.* PNL-2648, Pacific Northwest National Laboratory, Richland, Washington.

Sciacca, F., et al. 1986. *Generic Methodology for Estimating the Labor Cost Associated with the Removal of Hardware, Materials, and Structures from Nuclear Power Plants.* SEA Report 84-116-05-A:1, Science and Engineering Associates, Inc., and Mathtech, Inc., Albuquerque, New Mexico.

Sciacca, F. 1992. *Generic Cost Estimates.* NUREG/CR-4627 (Rev. 2), Science and Engineering Associates, Inc., Albuquerque, New Mexico.

Sciacca, F., et al. 1989. *Radiation-Related Impacts for Nuclear Plant Physical Modifications.* NUREG/CR-5236, Science and Engineering Associates, Inc., Albuquerque, New Mexico.

Seaver, D., and W. Stillwell. 1983. *Procedures for Using Expert Judgment to Estimate Human Error Probabilities in Nuclear Power Plant Operations.* NUREG/CR-2743, Decision Science Consortium, Incorporation, Falls Church, Virginia.

Seiler, F. 1987. "Error Propagation for Large Error," *Risk Analysis,* 7(4):509-518.

Smith and Kastenberg. 1976. "On Risk Assessment of High Level Radioactive Waste Disposal." *Nuclear Engineering and Design.* 39:293-333.

Sprung, I., et al. 1990. *Evaluation of Severe Accident Risks: Quantification of Major Input Parameters, MACCS Input,* NUREG/CR-4551, SAND86-1309, Vol. 2, Rev. 1, Part 7, Sandia National Laboratories, December, 1990.

Stevenson, J. 1981. *Evaluation of the Cost Effects on Nuclear Power Plant Construction Resulting from the Increase in Seismic Design Level.* NUREG/CR-1508, Structural Mechanics Associates, Woodward-Clyde Consultants, Cleveland, Ohio.

Stewart, H., et al. 1989. *System Analysis and Risk Assessment System (SARA), Reference Manual, Version 4.0.* NUREG/CR-5022, EG&G Idaho, Idaho Falls, Idaho.

Strenge, D., et al. 1980. *ALLDOS--A Computer Program for Calculation of Radiation Doses from Airborne and Waterborne Releases.* PNL-3524, Battelle Pacific Northwest National Laboratories, Richland, Washington.

Stillwell, W., et al. 1982. *Expert Estimation of Human Error Probabilities in Nuclear Power Plant Operations: A Review of Probability Assessment and Scaling.* NUREG/CR-2255, Decision Science Consortium Incorporation, Falls Church, Virginia.

Strip, D. 1982. *Estimates of the Financial Risks of Nuclear Power Reactor Accidents.* NUREG/CR-2723, Sandia National Laboratories, Albuquerque, New Mexico.

Summers, R., et al. 1995a. *MELCOR Computer Code Manuals: Primer and User's Guide Version 1.8.3.* NUREG/CR-6119 Vol. 1, Sandia National Laboratories, Albuquerque, New Mexico.

Summers R., et al. 1995b. *MELCOR Computer Code Manuals: Reference Manuals Version 1.8.3*. NUREG/CR-6119 Vol. 2, Sandia National Laboratories, Albuquerque, New Mexico.

Swain, A., and H. Guttman. 1983. *Handbook of Human Reliability Analysis with Emphasis on Nuclear Power Plant Applications*. NUREG/CR-1278, Sandia National Laboratories, Albuquerque, New Mexico.

Swain, A. 1987. *Accident Sequence Evaluation Program Human Reliability Analysis Procedure*. NUREG/CR-4772, Sandia National Laboratories, Albuquerque, New Mexico.

The Analytic Sciences Corporation (TASC). 1979. *Status Report on Risk Assessment for Nuclear Waste Disposal*. EPRI-NP-1197, The Analytic Sciences Corporation, Reading, Massachusetts.

Tawil, J., et al. 1985. *Offsite Consequences of Radiological Accidents: Methods, Cost, and Schedules for Decontamination*. NUREG/CR-3413, Pacific Northwest National Laboratory, Richland, Washington.

Tawil, J., et al. 1991. *Considerations Regarding the Estimation of Property Damage from Reactor Accidents*. Letter Report, Pacific Northwest National Laboratory, Richland, Washington.

Tichler, J., et al. 1995. *Radioactive Materials Released from Nuclear Power Plants. Annual Report 1993*. NUREG/CR-2907 Vol. 14, Brookhaven National Laboratory, Upton, New York.

United Engineers and Constructors, Inc. 1979. *Commercial Electric Power Cost Studies, Part 8, Total Generating Costs: Coal and Nuclear Plants*. NUREG-0248, U.S. Nuclear Regulatory Commission and Department of Energy, Washington, D.C.

United Engineers and Constructors, Inc. 1986. *Energy Economic Data Base (EEDB)--Phase VIII, Complete CONCISE Printouts for Model 148 Pressurized Water Reactor (Median Experience Basis) and Model 205 BWR (ME) Mark II, 1195 MWe Boiling Water Reactor*. United Engineers and Constructors, Inc., Philadelphia, Pennsylvania.

United Engineers and Constructors, Inc. 1988a. *Phase IX Update (1987) Report for the Energy Economic Data Base (EEDB) Program EEDB-1X*. DOE/NE-0091. U.S. Department of Energy, Washington, D.C.

United Engineers and Constructors, Inc. 1988b. *Technical Reference Book for the Energy Economic Data Base Program EEDB Phase IX (1987)*. DOE/NE-002, United Engineers and Constructors, Inc., Philadelphia, Pennsylvania. (Microfiche copies are available from the Regulation Development Branch, Division of Regulatory Applications, Office of Nuclear Regulatory Research.)

U.S. Atomic Energy Commission (AEC). 1972. *Environmental Survey of Transportation of Radioactive Materials to and from Nuclear Power Plants*. WASH-1238, U.S. Atomic Energy Commission, Washington, D.C.

U.S. Department of Energy (DOE). 1979. *Technology for Commercial Radioactive Waste Management: Spent Fuel Storage*. DOE/EV-0028, U.S. Department of Energy, Washington, D.C.

U.S. Department of Energy (DOE). 1982. *Cost Guide, Volume 2: Standard Procedures for Determining Revenue Requirements (Product Cost)*. DOE/MA-0063 (Vol. 2), U.S. Department of Energy, Washington, D.C.

U.S. Department of Energy (DOE). 1987. *Health and Environmental Consequences of the Chernobyl Nuclear Power Plant Accident*. DOE/ER-0332, U.S. Department of Energy, Washington, D.C.

U.S. Department of Energy (DOE). 1996. "Characterization of Uncertainties in Risk Assessment with Special Reference to Probabilistic Uncertainty Analysis." EA-413-068/0296, U.S. Department of Energy, Washington, D.C. Available online at URL: http://www.eh.doe.gov/oepa/guidance/risk.htm.

U.S. Department of Labor. 1988. *Industry Wage Survey: Electric and Gas Utilities, February 1988.* Bureau of Labor Statistics, U.S. Department of Labor, Washington, D.C.

U.S. Environmental Protection Agency (EPA). 1983. *Regulatory Impact Analysis of Final Environmental Standards for Uranium Mill Tailings at Active Sites.* EPA-520/1-83-010, Office of Radiation Programs, Washington, D.C.

U.S. Environmental Protection Agency (EPA). 1989. *User's Guide for the COMPLY Code.* EPA/520/1-89-003, U.S. Environmental Protection Agency, Washington, D.C.

U.S. Nuclear Regulatory Commission (NRC). 1975a. *Reactor Safety Study.* WASH-1400, U.S. Nuclear Regulatory Commission, Washington, D.C.

U.S. Nuclear Regulatory Commission (NRC). 1975b. *Environmental Survey of Transportation of Radioactive Materials to and from Nuclear Power Plants, Supplement I to WASH-1238.* NUREG/75-038, U.S. Nuclear Regulatory Commission, Washington, D.C.

U.S. Nuclear Regulatory Commission (NRC). 1976. *Potential Releases of Cesium from Irradiated Fuel in a Transportation Accident, Supplement II to WASH-1238.* NUREG-0069, U.S. Nuclear Regulatory Commission, Washington, D.C.

U.S. Nuclear Regulatory Commission (NRC). 1977. *Final Environmental Statement on the Transportation of Radioactive Material by Air and Other Modes.* NUREG-0170, U.S. Nuclear Regulatory Commission, Washington, D.C.

U.S. Nuclear Regulatory Commission (NRC). 1983a. *PRA Procedures Guide: A Guide to the Performance of Probabilistic Risk Assessment for Nuclear Power Plants.* NUREG/CR-2300, U.S. Nuclear Regulatory Commission, Washington, D.C.

U.S. Nuclear Regulatory Commission (NRC). 1983b. *Prioritization of Generic Safety Issues.* NUREG-0933 (and subsequent revisions), U.S. Nuclear Regulatory Commission, Washington, D.C.

U.S. Nuclear Regulatory Commission (NRC). 1983c. *Regulatory Analysis Guidelines of the U.S. Nuclear Regulatory Commission.* NUREG/BR-0058, Office of the Executive Director for Operations, Washington, D.C.

U.S. Nuclear Regulatory Commission (NRC). 1984a. *Guide to Types of NRC Formal Documents and Their Uses.* NUREG/BR-0070, Division of Technical Information and Document Control, Washington, D.C.

U.S. Nuclear Regulatory Commission (NRC). 1984b. *Regulatory Analysis Guidelines of the U.S. Nuclear Regulatory Commission.* NUREG/BR-0058 (Rev. 1), Office of the Executive Director for Operations, Washington, D.C.

U.S. Nuclear Regulatory Commission (NRC). 1986. "Safety Goals for the Operation of Nuclear Power Plants; Policy Statement; Republication." 51 FR 30028, August 21, 1986.

U.S. Nuclear Regulatory Commission (NRC). 1990a. *Backfitting Guidelines.* NUREG-1409, Office for Analysis and Evaluation of Operational Data, Washington, D.C.

U.S. Nuclear Regulatory Commission (NRC). 1990b. "Staff Requirements Memorandum to the EDO on SECY-89-102 - Implementation of the Safety Goals." June 15, 1990.

U.S. Nuclear Regulatory Commission (NRC). 1991. *Severe Accident Risks: An Assessment for Five U.S. Nuclear Power Plants.* NUREG-1150, Division of Systems Research, Washington, D.C.

U.S. Nuclear Regulatory Commission (NRC). 1992. *Nuclear Regulatory Commission Information Digest, 1992 Edition.* NUREG-1350, Vol.4, Office of the Controller, Washington, D.C.

U.S. Nuclear Regulatory Commission (NRC). 1994. *Safety Evaluation by the NRC Related to the Order Approving the Decommissioning Plan and Authorizing Decommissioning of Rancho Seco Nuclear Generating Station, Docket No. 50-312.* U.S. Nuclear Regulatory Commission, Washington, D.C.

U.S. Nuclear Regulatory Commission (NRC). 1995a. *Regulatory Analysis Guidelines of the U.S. Nuclear Regulatory Commission.* NUREG/BR-0058 (Rev. 2), Office of the Executive Director for Operations, Washington, D.C.

U.S. Nuclear Regulatory Commission (NRC). 1995b. "Use of Probabilistic Risk Assessment Methods in Nuclear Regulatory Activities; Final Policy Statement." 60 FR 42622, August 16, 1995.

U.S. Nuclear Regulatory Commission (NRC). 1995c. *Safety Evaluation Report by the NRC Related to the Request to Authorize Facility Decommissioning, Yankee Nuclear Power Station, Docket No. 50-029,* U.S. Nuclear Regulatory Commission, Washington, D.C.

U.S. Nuclear Regulatory Commission (NRC). 1995d. *Assessment of NRC's Dollar Per Person-Rem Conversion Factor Policy.* NUREG-1530.

U.S. Nuclear Regulatory Commission (NRC). 1996a. "Status of the IPE and IPEEE Programs." SECY-96-051. March 8, 1996.

U.S. Nuclear Regulatory Commission (NRC). 1996b. *Individual Plant Examination Program: Perspectives on Reactor Safety and Plant Performance, Summary Report.* Draft NUREG-1560, Vols. 1 and 2.

U.S. Nuclear Regulatory Commission (NRC). 1996c. "Staff Requirements Memorandum Related to Proposed Revision 6 to the CRGR Charter," Acc. No. 9604050059, March 22, 1996.

VanKuiken, J., et al. 1987. *Replacement Energy Costs for Nuclear Electricity-Generating Units in the United States: 1987-1991.* NUREG/CR-4012, Vol. 2, Argonne National Laboratory, Argonne, Illinois.

VanKuiken, J., et al. 1992. *Replacement Energy Costs for Nuclear Electricity-Generating Units in the United States: 1992-1996.* NUREG/CR-4012, Vol. 3, Argonne National Laboratory, Argonne, Illinois.

VanKuiken, J., et al. 1993. *Replacement Energy, Capacity, and Reliability Costs for Permanent Nuclear Shutdowns.* NUREG/CR-6080, Argonne National Laboratory, Argonne, Illinois.

VanKuiken, J., et al. 1994. *Replacement Energy Cost Analysis Package (RECAP) User's Guide.* NUREG/CR-5344, Rev. 1, Argonne National Laboratory, Argonne, Illinois.

Vesely, W., et al. 1981. *Fault Tree Handbook.* NUREG-0492, U.S. Nuclear Regulatory Commission, Washington, D.C.

Vesely, W., et al. 1983. *Measures of Risk Importance and Their Applications*. NUREG/CR-3385. Battelle Columbus Laboratories, Columbus, Ohio.

Vesely, W., and D. Rasmuson. 1984. "PRA Uncertainties and the Roles of Sensitivity and Uncertainty Analyses," *Proceedings of the 9th Annual Statistics Symposium on National Energy Issues* (NUREG/CP-0053). Los Alamos National Laboratory, Los Alamos, New Mexico.

Wilkinson J., et al. 1991. *Idaho Chemical Processing Plant Failure Rate Database*. WIN-330, Idaho National Engineering Laboratory, Idaho Falls, Idaho.

Wright, M. 1973. *Discounted Cash Flow.* McGraw-Hill, London, England.

Young, M. 1994. *Evaluation of Population Density and Distribution Criteria in Nuclear Power Plant Siting*. SAND93-0848, Sandia National Laboratories, Albuquerque, New Mexico.

Young, M. 1995. *MACCS Economic Consequence Tables for Regulatory Applications*. Draft Letter Report submitted to Christiana Lui, USNRC, November 10, 1995. Sandia National Laboratories, Albuquerque, New Mexico.

Appendix A

Regulatory Analysis Issues

Appendix A

Regulatory Analysis Issues

This appendix addresses three topics of particular interest in connection with the performance of regulatory analyses. Owing to the special nature or extensiveness of these topics, it was judged best to discuss them here rather than in the main body of this Handbook, as has been done with other issues. The topics are human factors issues, cumulative accounting of past and ongoing safety improvements, and use of industry risk and cost estimates.

A.1 Human Factors Issues

Regulatory analyses involving proposed actions related to human factors issues often prove to be difficult to quantify, especially with regard to risk-related attributes. This degree of difficulty varies to the extent that the human factors issue is "concrete" or "abstract." For example, an issue proposing to clarify standard procedures for hardware inspection can be perceived as fairly concrete. Inspection personnel can be expected to perform more efficiently with less likelihood of error during the inspection procedure. This would decrease the likelihood of overlooking a hardware defect. Such an issue can be translated into a reduced unavailability for selected hardware components, several of which most likely appear in a facility risk equation. For such a human factors issue, the expected improvement can be treated as an improvement in the reliability of the hardware itself. Thus, this "concrete" human factors issue can be analyzed in a manner similar to any other hardware issue.

As an "abstract" example, consider a human factors issue proposing to revise management guidelines for a power plant. Difficulty is foreseen in directly linking this action to parameters in a plant risk equation. One approach might be to assume some small improvement in the portion of the unavailability due to human error in each risk parameter as appropriate. The analysis then could proceed as in a hardware issue, except that many parameters might be affected, thereby complicating the calculations. Studies completed by Samanta et al. (1981, 1989) and Andrews et al. (1985), discussed in Section A.1.1, provide results which can facilitate these types of calculations.

As an alternative, an approach similar to that discussed in Section 5.6.2 may be appropriate. For fairly "nebulous" issues (i.e., ones where the reductions in accident frequency [and/or risk] are difficult to quantify directly via a facility risk equation) expert judgment of the changes in the accident frequency (and/or risk) can be based on the total accident frequency (and/or risk). Employing informal procedures or a formalized one such as the Delphi method (Dalkey and Helmer 1963; Humphress and Lewis 1982), the analyst can obtain a consensus estimate of the percent change in total accident frequency (and/or risk) due to implementation of the proposed action. This may be the best that can be done for the more "abstract" human factors issues.

Several studies have been conducted to address quantification of human error probabilities (HEPs) for nuclear power plant risk analyses. The initial standard for human error analysis, subsequently named the Technique for Human Error Rate Prediction (THERP), was established by the complementary documents NUREG/CR-1278 (Swain and Guttmann 1983) and NUREG/CR-2254 (Bell and Swain 1983). Swain and Guttmann (1983) developed a handbook of human performance models and procedures for estimating HEPs, including numerical values, for application in nuclear power plant risk

analyses. In its sister document (NUREG/CR-2254), Bell and Swain (1983) detailed a standard procedure to conduct a human reliability analysis for nuclear power plants, emphasizing an event tree approach which utilizes results from NUREG/CR-1278. Swain (1987) supplemented the THERP with a simplified version in NUREG/CR-4772, intended "to enable systems analysts, with minimal support from experts in human reliability analysis, to make estimates of human error probabilities and other performance characteristics which are sufficiently accurate for many probabilistic risk assessments."

Additional studies which can assist the analyst in performing a regulatory analysis, particularly the value-impact portion, for a human factors issue can be grouped into two categories:

1. Documents addressing methods to estimate HEPs, sometimes including numerical results for applying these methods (see Section A.1.2). The previous studies plus a trio by Stillwell et al. (1982), Seaver and Stillwell (1983), and Comer et al. (1984) are examples of these "methods" documents.

2. Documents presenting the results of quantifying the impact of HEPs on a nuclear power plant's overall core-melt frequency and/or public risk (see Section A.1.1). A pair of studies by Samanta et al. (1981, 1989) and one by Andrews et al. (1985) are examples of these "results" documents.

Documents from each group have been reviewed, and summaries are provided in the remainder of this appendix section. We begin with studies from the second group.

A.1.1 Results Documents

In a pair of studies, Samanta et al. (1981, 1989) evaluated the sensitivity of selected risk parameters to changes in HEPs for a pair of representative PWRs. The first study (NUREG/CR-1879 [Samanta et al. 1981]) quantified the effect of changing HEPs for the Surry PWR on the following parameters: system unavailability, accident sequence frequency, core-melt frequency, and release category frequency. The Human Error Sensitivity Assessment of a PWR (HESAP) computer code was developed to model the human errors in fault trees based on the Surry plant as modeled in WASH-1400 (NRC 1975a). HEPs were both increased and decreased by factors of 3, 10, 20, and 30 relative to selected base-case values. Numerous tables and figures give the results of simultaneously varying all HEPs by these factors in terms of the changes in the four risk parameters listed above.

In addition, Samanta et al. (1981) estimated the sensitivity of core-melt and release category frequencies to changes in probabilities for generic classes of human error (e.g., operator error, maintenance error, and errors of omission/commission). Also, individual human errors were ranked relative to one another in terms of their structural importance to core-melt frequency and their reliability importance to core-melt and release category frequencies (Vesely et al. 1983). The results are conveniently presented as tables and figures.

The second study (NUREG/CR-5319 [Samanta et al. 1989]) updated the first using the more recent, and more detailed, Oconee PWR risk assessment performed by EPRI and Duke Power Co. (1984). Only the portion of the Oconee risk assessment pertaining to internal events was employed by Samanta et al. External events were not included. The effect of changing HEPs on the following risk parameters was evaluated: accident sequence frequency, core-melt frequency, and core-melt bin frequency (somewhat analogous to release category frequency). Statistical methods were employed to estimate factors by which HEPs could be both increased and decreased realistically. Factors ranging as high as 26 were calculated, depending upon the type of human error (an additional degree of resolution relative to the first study).

Human errors were divided into the following overlapping categories for the sensitivity analysis:

- *Timing* - when the human error occurs relative to the accident initiating event or transient
- *Accident Initiator* - which accident initiating event is related to the human error
- *System* - the system in which the human error occurs
- *Personnel* - which individuals are responsible for the human error
- *Omission/Commission* - whether the human error is one where a needed action is not performed (omission) or one where an improper action is performed (commission)
- *Event Type* - relating the human error to the category assigned in the Oconee risk assessment (EPRI and Duke Power Co. 1984)
- *Location* - where the personnel most responsible for the human error are located
- *Activity* - which type of nuclear power plant activity relates to the human error
- *Dependence* - whether or not the human error results from another human error
- *NRC Program* - which NRC inspection area may detect the occurrence of the human error.

The sensitivity of the three risk parameters mentioned above to changes in HEPs for these various categories are conveniently presented as figures in NUREG/CR-5319. All HEPs within each category were simultaneously varied relative to the base-case value from the Oconee risk assessment. In addition, the effect of simultaneous variation of all HEPs on the three risk parameters was evaluated. The results were compared with those from the first study.

Both these studies provide information which would be useful in human factors issues where categories of HEPs would be affected. For example, plant-wide improvements in maintenance procedures or more stringent testing of reactor operators would be expected to reduce all HEPs falling within the appropriate categories. These two studies provide relative values for the change in selected risk parameters for such simultaneous variation of HEPs. Most human factors issues appear to be of this "global" nature, hence the usefulness of the studies' results.

The NRC (NRC 1983b), with assistance from Pacific Northwest National Laboratory (PNNL) (Andrews et al. 1983), has been systematically prioritizing generic safety issues since 1982, many of which involve human factors for nuclear power plants. Simple methods were initially established to handle human factors issues which fell into the "concrete" and "abstract" categories discussed earlier in this appendix section. The earlier discussion summarizes the approach that was taken in the prioritization assessments. NUREG/CR-2800 and its supplements (Andrews et al. 1983) provide numerous examples of human factors issues analyzed using these simple methods. In 1985, Andrews et al. conducted a study (NUREG/CR-2800, Supplement 3) in which they 1) developed an alternative approach to prioritizing human factors issues and 2) prioritized the elements of the 1983 Human Factors Program Plan (HFPP) developed by the NRC.

The development of the alternative human factors methodology by Andrews et al. (1985) involved investigation of four attributes of human factors analyses: 1) the general guidelines used by the decision-making panel in the initial prioritizations, 2) the impact of using alternate representative plants, 3) human factors modeling related to maintenance and plant availability, and 4) human factors data bases. For the first attribute, decision-making basis was documented in terms of

plant-related guidelines, human error assumptions, independence of human factors issues, and cost guidance. For the second attribute, the differences in core-melt frequency resulting from reducing HEPs for three different representative plants, the Oconee and Calvert Cliffs PWRs and the Grand Gulf BWR, as modeled by their Reactor Safety Study Methodology Application Program (RSSMAP) studies (Kolb et al. 1981; Hatch et al. 1981, 1982) was quantified. For the third attribute, new maintenance and plant availability models were developed and tested. For the fourth attribute, available human factors data bases were examined and found to be only of limited use in prioritization analyses.

Andrews et al. (1985) also prioritized the following six elements of the 1983 HFPP: 1) staffing and qualifications, 2) training, 3) licensing examinations, 4) procedures, 5) man-machine interfaces, and 6) management and organization. Eighteen generic safety issues were divided among the six elements. For each, expert opinion on the effects on HEPs and costs resulting from resolution was solicited through a structured series of questionnaires. The consensus changes in HEPs were transformed into public risk changes via the Oconee and Grand Gulf RSSMAP models. Public risk, industry, and NRC cost estimates for implementing the HFPP as a whole and for implementing each specific element were calculated and used to assign priorities to the six elements.

As in the studies by Samanta et al. (1981, 1989), this study by Andrews et al. (1985) provides information which would be useful to human factors issues where categories of HEPs would be affected. It provides relative values for the change in core-melt frequency and public risk for simultaneous variation of HEPs. In addition, since a comprehensive program for human factors improvements has been examined, estimates of maximum possible reductions in public risk and increases in industry and NRC costs attainable by implementing such a program are available. Individual issues within each element of the HFPP were also examined, with their public risk reductions and industry and NRC cost increases evaluated. Therefore, this information is available for several types of human factors issues.

A.1.2 Methods Documents

In NUREG/CR-2255, Stillwell et al. (1982) reviewed probability assessment and psychological scaling techniques that could be used to estimate human error probabilities in nuclear power plant operations. The techniques rely on expert opinion and can be used where data do not exist or are inadequate. An extensive literature search was performed, and the results are discussed under two categories: 1) subjective probability assessment, and 2) psychological scaling. While this report is primarily a qualitative overview of the various techniques, it provides useful background as to which ones would be appropriate and when, as well as serving as a reference document for additional information.

The first category examined by Stillwell et al. considered seven aspects of subjective probability assessment: 1) use of expert judgment for assessing probabilities, 2) probabilistic assessment techniques, 3) use of multiple experts in assessing probabilities, 4) problems and biases in the assessment of subjective probability, 5) training probability assessors, 6) new methods for resolving inconsistent judgments, and 7) defining and structuring judgments. The second category compared the following five techniques of psychological scaling, with emphasis on their validity and reliability: 1) paired comparisons, 2) ranking, 3) sorting, 4) rating, and 5) fractionation.

In a follow-on report (NUREG/CR-2743), Seaver and Stillwell (1983) described and evaluated the following five procedures for employing expert opinion to estimate HEPs for nuclear power plant operations: 1) paired comparisons, 2) ranking and rating, 3) direct numerical estimation, 4) indirect numerical estimation, and 5) multiattribute utility measurement. The following criteria were used to evaluate these techniques: quality of judgments, difficulty of data collection, empirical support, acceptability, theoretical justification, and data processing. Quantitative guidance on the implementation of these procedures is provided, along with situational constraints (e.g., the number of HEPs to be estimated) which impact the choice of a procedure.

Third in this series of studies was NUREG/CR-3688, in which Comer et al. (1984) examined selected techniques for psychological scaling, first introduced by Stillwell et al. (1982) in NUREG/CR-2255. Two techniques—direct numerical estimation and paired comparison scaling—were evaluated in detail. Comer et al. answered the following 11 questions as a result of their study:

1. Do psychological scaling techniques produce consistent judgments from which to estimate HEPs?

2. Do psychological scaling techniques produce valid HEP estimates?

3. Can the data collected using psychological scaling techniques be generalized?

4. Are the HEP estimates that are generated from psychological scaling techniques suitable for use in probabilistic risk assessments and the human reliability data bank?

5. Can psychological scaling procedures be used by persons who are not experts to generate HEP estimates?

6. Do the experts used in the psychological scaling process have confidence in their ability to make judgments?

7. Is there any difference in the quality of estimates obtained from the two scaling techniques?

8. Is there any difference in the results based on the type of task that is being judged?

9. Do education and experience have any effect of the experts' judgments?

10. How should the paired comparison scale be calibrated into a probability scale?

11. Can reasonable uncertainty bounds be estimated judgmentally?

The HEPs for 35 BWR tasks that were estimated as part of the study are also presented.

These three studies provide guidance on the estimation of HEPs by expert judgment. Although intended for estimating HEPs directly, the techniques presented in these three studies are readily adapted to estimating changes in HEPs by expert judgment, typically what is needed to quantify the value-impact of a human factors issue. Techniques such as these can be used to estimate the changes in individual or families of HEPs. Subsequently, they can be combined with knowledge on the overall effect of more global changes in HEPs on core-melt frequency and public risk as provided by studies such as those of Samanta et al. (1981, 1989) and Andrews et al. (1985).

A.2 Cumulative Accounting of Past and Ongoing Safety Improvements

When performing a regulatory analysis, an analyst should be aware of previous or ongoing safety improvements which already have impacted or bear the potential to impact the status quo for the issue being addressed. Incorporation of such improvements could be accommodated if there existed a "master" risk assessment (or a few "masters") deemed representative of all facilities for which all previous safety improvements have been included and the baseline risk recalculated. Since this currently is not practical, the analyst must resort to a "best effort" approach in accounting for preexisting or concurrent impacts, consistent with NRC policy regarding the treatment of voluntary activities by affected licensees (see NRC Guidelines Section 4.3).

During Step 1 of the regulatory analysis (see Section 4.1), the analyst should make a thorough effort to identify any previous or ongoing safety improvements which may impact the issue under consideration. For example, an analyst addressing proposed improvements in diesel generator performance at power reactors should be aware of any diesel generator improvements already addressed in station blackout (SBO) considerations. To the extent possible, the analyst should modify the risk equation of the plant chosen as representative to reflect the upgraded status quo from these other safety improvements. The analyst can then proceed to assess the difference between this new status quo and the proposed improvements from the issue under consideration. The analyst should also seek out and use (when appropriate) the most recent risk assessments (including IPE and IPEEE reports) affecting the facilities impacted by the issues under consideration (see Table 5.2).

An attempt to accommodate "dependences" between issues was informally tried during the Prioritization of Safety Issues Program (Andrews et al. 1983). Issues of "high" rank were divided into "families" with similar issue resolutions (e.g., diesel generator reliability and SBO were assigned to an electrical family). The issues within each family were examined for all pairwise combinations where Issue A was implemented before Issue B and vice versa. Within these families, few dependent pairs were found and, for those found, the dependent effects were generally small (<10%). A similar approach could be taken, although the analyst may wish to consider greater than pairwise combinations if necessary.

A.3 Use of Industry Risk and Cost Estimates

As a general rule, analysts can use risk and cost data prepared by industry sources provided the analyst can independently attest to the reasonableness of the data.

Table 5.2 in Section 5.6.1 lists nuclear power plant risk/reliability studies (other than IPE and IPEEE reports) for use in regulatory analyses for power reactors. Several studies have been performed by the nuclear industry (i.e., the utilities themselves and/or their contractors). Theoretically, some bias may exist depending upon the source of the study (NRC contractor or industry). Some indication of such bias may be obtained by comparing studies performed for the same plant by different sources. However, one would have to take care not to attribute differences to bias if plant changes, more recent data, or different analytical methods are the reasons for differing results. The issue of bias may often be rendered useless to debate since the analyst may not have a wide choice of representative plants with existing risk/reliability studies. The analyst should always opt for the most representative plant, whether its risk/reliability study was performed by an NRC contractor or industry. The same considerations apply to regulatory analyses for non-reactor facilities, to the extent that representative risk/reliability studies are available (see Sections 5.6.1 and C.2.1.1).

Wider choice may be available to the analyst for cost estimates, and the analyst may be faced with different costs from equally valid sources. A sensitivity analysis may be best in which the analyst uses each set of costs for those attributes most strongly affected. However, should the analyst have reason to believe one set to be more representative than the other, the more representative set should be selected. The analyst may still use the other set in a sensitivity study should it be deemed appropriate.

Appendix B

Supplemental Information For Value-Impact Analyses

Appendix B

Supplemental Information For Value-Impact Analyses

This appendix presents data on the number of operating power reactors and their remaining lifetimes, methods of economic discounting and present value calculation, data on occupational exposure experience at nuclear power plants and some non-reactor facilities, additional cost information, and a description of the calculational method used to generate Table 5.3, "Expected Population Doses," for power reactor plant damage states. These can be used by the analyst to support his evaluation of attributes during the value-impact analysis portion of a regulatory analysis.

B.1 Numbers of Operating Power Reactors and Their Remaining Lifetimes

Table B.1 lists the numbers of operating power reactors and their remaining lifetimes relative to 1993. The lifetimes are based on the years in which the Operating Licenses currently expire, as reported in NUREG-1350, Vol.4 (NRC 1992). Table B.1 lists the plants by vendor and reactor type.

Table B.1 Numbers and lifetimes of operating nuclear power plants

Reactor Supplier	Type	Number of Operating Units (N)	Average Remaining Lifetime (T) (years)[a]
Westinghouse	PWR	52	25.4
General Electric	BWR	37	23.3
Combustion Engineering	PWR	15	23.7
Babcock and Wilcox	PWR	7	21.4
	N	**T (years)**	
All PWRs	74	24.7	
All BWRs	37	23.3	
All Plants	111	24.2	

(a) Relative to 1993.

B.2 Economic Discounting and Calculation of Present Value

To evaluate the economic consequences of proposed regulatory actions, the costs incurred or saved over a period of years must be summed.

This summation cannot be done directly because an amount of money available today has greater value than the same amount at a future date. There are several reasons for this difference in value:

- the present amount of money can be invested and the total amount increased through accumulated interest
- certain consumption today is superior to contingent consumption in the future
- the option of present or future consumption is superior to future consumption alone.

A method known as "discounting" is used to compare amounts of money expended at different times. The result of discounting is called the "present value," the amount of money that must be invested today to achieve a specified sum in the future. To perform the discounting procedure, the analyst must know three parameters:

- the discount rate
- the time period over which discounting is to be performed
- the amount of money or value that is to be discounted.

B.2.1 Discount Rate

The appropriate discount rate to use is often a controversial issue in the application of value-impact analysis. NRC Guidelines Section 4.3.3 states that the discount rates specified in the most recent version of OMB Circular A-94 are to be used in preparing regulatory analyses. Circular A-94 currently specifies use of a real discount rate (r) of 7% per year (OMB 1992). NRC Guidelines Section 4.3.3 further states that a discount rate of 3% should be used for sensitivity analysis to indicate the sensitivity of the results to the choice of discount rate.

When the time horizon associated with a regulatory action exceeds 100 years, Section 4.3.3 of the Guidelines specifies that the 7% real discount rate should not be used. Instead the net value should be calculated using the 3% real discount rate. In addition, the results should be displayed showing the values and impacts at the time they are incurred with no discounting (see Section 5.7).

OMB Circular A-94 defines the term "discount rate" as the interest rate used in calculating the present value of expected yearly benefits and costs. When a real discount rate is used as specified in Section 4.3 of the Guidelines, yearly benefits and costs should be in real or constant dollars. Circular A-94 defines "real or constant dollar values" as economic units measured in terms of constant purchasing power. A real value is not affected by general price inflation. Real values can be estimated by deflating nominal values with a general price index, generally the GDP deflator as discussed in Section 5.8.

B.2.2 Discrete Discounting

The following formula is used to determine the present value (PV) of an amount (F_t) at the end of a future time period:

$$PV = F_t/(1 + r)^t,$$

where r = the real annual discount rate (as fraction, not percent)
t = the number of years in the future in which the costs occur.

For example, to determine how much $750 to be received 25 years (t) hence is worth today, using a 7% real discount rate (r), the formula yields

$$PV = \$750/(1 + .07)^{25} = (\$750)(0.184)$$
$$= \$138$$

Table B.2 contains values of the discount factor $1/(1 + r)^t$ for discount rates (r) of 3% and 7% and for various values of t, the number of years. To find the present value of a stream of costs and revenues, the analyst should record the costs and revenues occurring in each year. Then, for each year, the net cost is determined by simply adding algebraically the costs and revenues for that year. After this has been done for each year, the net cost in each year is discounted to the present using Table B.2. The sum of these present values is the present value of the entire stream of costs and revenues. A sample use of this formula in value-impact analysis would be in determining the PV of implementation costs for industry and the NRC which occur in the future.

The above formula is used for discounting single amounts backward in time. However, some of the costs encountered in value-impact analysis recur on an annual basis. These include not only industry and NRC operating costs, but also the monetized values of the annual per-facility reductions in routine public and occupational dose due to operation (see Sections 5.7.2 and 5.7,4). Such costs can be discounted by the use of the following annuity formula (only if they are the same amount for each time period):

$$PV = C_A[(1 + r)^t - 1]/r(1 + r)^t$$

where C_A = identical annual costs
r = the real discount rate (as fraction, not percent)
t = the number of years over which the costs recur.

For example, if the increase in annual industry costs is $1,000, due to increased maintenance expenses, with a 7% real discount rate for 20 years, starting at the present time, the present value of these costs is

$$PV = (\$1,000)[(1 + .07)^{20} - 1]/(.07)(1 + .07)^{20}$$
$$= (\$1,000)(10.6) = \$10,600$$

Table B.3 contains values of the annuity discount factor: $[(1 + r)^t - 1]/r(1 + r)^t$, for real discount rates (r) of 3% and 7% and for various values of t, the number of years over which the costs are incurred.

In most cases, operating costs will start to be incurred at some date in the future, after which the real costs will be constant on an annual basis for the remaining life of the facility. To discount the costs in this situation, a combination of the above two methods or formulas is needed. For example, given the same $1,000 annual cost for a 20-year period at a 7% real discount rate, but starting five years in the future, the formula to calculate the PV is

$$PV = (\$1,000)[(1 + r)^{t_2} - 1]/r(1 + r)^{t_1}(1 + r)^{t_2}$$

where r = 7% discount rate (i.e., .07/yr)
t_1 = 5 years
t_2 = 20 years for annuity period.

Therefore, PV = ($1,000)(10.6)(0.713) = $7,560.

Table B.2 Present value of a future dollar (yearly compounding)

Year	3%	7%
1	0.971	0.935
2	0.943	0.873
3	0.915	0.816
4	0.889	0.763
5	0.863	0.713
6	0.838	0.666
7	0.813	0.623
8	0.789	0.582
9	0.766	0.544
10	0.744	0.508
11	0.722	0.475
12	0.701	0.444
13	0.681	0.415
14	0.661	0.388
15	0.642	0.362
16	0.623	0.339
17	0.605	0.317
18	0.587	0.296
19	0.570	0.277
20	0.554	0.258
25	0.478	0.184
30	0.412	0.131
40	0.307	0.0668
50	0.228	0.0339

Table B.3 Present value of annuity of a dollar, received at end of each year (yearly compounding)

Year	3%	7%
1	0.971	0.935
2	1.91	1.81
3	2.83	2.62
4	3.72	3.39
5	4.58	4.10
6	5.42	4.77
7	6.23	5.39
8	7.02	5.97
9	7.79	6.52
10	8.53	7.02
11	9.25	7.50
12	9.95	7.94
13	10.6	8.36
14	11.3	8.75
15	11.9	9.11
16	12.6	9.45
17	13.2	9.76
18	13.8	10.1
19	14.3	10.3
20	14.9	10.6
25	17.4	11.7
30	19.6	12.4
40	23.1	13.3
50	25.7	13.8

Tables B.2 and B.3 contain the appropriate discount factors to be multiplied together. Additional background on discrete discounting can be found in EPRI (1986), DOE (1982), and Wright (1973).

B.2.3 Continuous Discounting

Discrete discounting, as discussed above, deals with costs and revenues that occur at discrete instances over a period of time. For most regulatory analyses, discrete discounting and the present value factors shown in Tables B.2 and B.3 can be used. Technically, discrete discounting does not correctly account for consequences that occur constantly, but the difference is viewed as minimal, and the additional effort is generally not warranted in a standard regulatory analysis.

Continuous discounting should be used in regulatory analyses beyond the standard analysis when costs and revenues occur continuously over a period of time, such as those which must be weighed by an accident frequency over the remaining life of a facility. The accident frequency is a continuous variable, although the real cost of the accident consequences is constant.

The formula for continuous discounting is derived from the discrete discounting formula as follows. Assume that in one period (t), the time will be subdivided into n intervals. The formula for discrete discounting, with a real discount rate of r, is $1/(1 + r/n)^n$. As we subdivide the time period into an infinite number of intervals in the limit, we would abandon discrete intervals altogether and so set the limit as

$$\lim_{n \to \infty} 1/(1 + r/n)^n = \exp(-r)$$

For t periods, instead of one period as above, the formula becomes exp(-rt), where r and t are defined over the same time period.

The monetized values for the reductions in public and occupational dose due to accidents, as well as the avoided onsite and offsite property damage costs, require continuous discounting. To calculate the present value for the public health (accident) and offsite property attributes, when the monetary value or cost C_O can occur with a frequency f, Strip (1982) provides the following formula:

$$\int_{t_i}^{t_f} C_o f \exp(-rt)dt = C_o f[\exp(-rt_i) - \exp(-rt_f)]/r$$

where t_i = time of onset of accident risk
t_f = time of end of accident risk.

For public (accident) risk, the product $C_O f$ is replaced by Z_{PHA} representing the monetary value of avoided risk before discounting (\$/facility-yr [see Section 5.7.1.3]). As an example, assume the monetary value of avoided public risk due to an accident is \$1.0E+4/facility-yr ($C_o f$ = \$1.0E+4). The facility is operational ($t_i = 0$) with a remaining lifetime of 25 years ($t_f = 25$). For an annual discount rate of 7% (r = .07/yr) the present value of avoided risk (monetized) becomes

$$
\begin{aligned}
PV &= (\$1.0E+4/yr)\,[\exp\{-(.07)(0)\} \\
&\quad - \exp\{-(.07)(25)\}]/(.07/yr) \\
&= (\$1.0E+4)(11.8) \\
&= \$1.18E+5/\text{facility}
\end{aligned}
$$

To determine the present value of a reduction in offsite property risk, the frequency (f in the general equation above) is replaced with the frequency reduction (Δf). As an example, let the frequency reduction (Δf) be 1.0E-5/facility-yr and the cost (C_O) be \$1.0E+9. The annual discount rate is 7% (r = .07/yr), and the reduction in accident frequency takes place 5 years in the future ($t_i = 5$) and will remain in place for 20 years ($t_f = 5 + 20 = 25$). The present value of the avoided offsite property damage becomes

$$
\begin{aligned}
PV &= (\$1.0E+9)(1.0E-5/yr)[\exp\{-(.07)(5)\} - \exp\{-(.07)(25)\}]/(.07/yr) \\
&= (\$1.0E+9)(1.0E-5)(7.58) = \$7.58E+4/\text{facility}
\end{aligned}
$$

To calculate present values for the occupational health (accident) and onsite property attributes, the continuous discounting formula must be modified. The modifications account for the fact that 1) some components of severe accident costs are not represented by constant annual charges as noted in Section B.2.2, and 2) the single-event present values must be reintegrated because the accident costs and risks would be spread over a period of time (e.g., over the remaining plant lifetime for replacement power costs and over the estimated 10 years for cleanup and decontamination following a severe accident, for onsite property damage). Sections 5.7.3.3 and 5.7.6.4 address these modifications and provide estimation guidelines for regulatory initiatives that affect accident frequencies in current and future years.

B.3 Occupational Exposure Experience

Two documents contain considerable information related to occupational exposure experience at nuclear power plants and some non-reactor facilities. In the first (NUREG/CR-5035), Beal et al. (1987) state the following concerning generic dose rate data for use in regulatory analyses:

> "...The NRC is generally concerned with the average exposures potentially experienced at all plants within a specific class (i.e., BWRs, PWRs, or PWRs manufactured by a particular vendor), rather than with the exposures at a specific plant. Therefore, it is desirable to have a generic dose-rate data base available to NRC analysts for making radiation exposure estimates."

The dose rates have been classified by Beal et al. (1987) according to the EEDB (United Engineers and Constructors, Inc. 1988b) code-of-accounts for nuclear power plant systems and components. The analyst can estimate the radiation exposure as the product of the estimated labor hours for work on a specific EEDB system/component and the dose rate for that system/component. Tables B.4 and B.5 list occupational dose rates for PWR and BWR systems and components, respectively, by EEDB classification.

Chapter 4 of NUREG/CR-5035 provides illustrative examples of the estimation of occupational radiation exposure for specific tasks at a power plant. Labor-hour estimates are obtained from the EEDB (United Engineers and Constructors, Inc. 1986). Adjustments to account for differences in labor productivity are taken from Riordan (1986). If hardware is to be removed, and/or a learning curve is to be involved, these effects are accounted for using information from Sciacca et al. (1986).

Table B.4 Occupational dose rates by EEDB classification for PWR systems and components (Beal et al. 1987)

EEDB Code-of-Account	Description	Average Dose Rate* (mr/hr)
REACTOR EQUIPMENT		
221.122	Reactor Vessel Closure & Attachments	650
221.123	Reactor Vessel Studs, Fasteners, Seals, & Gaskets	140
221.131-2	Reactor Vessel Upper and Lower Internals	800
221.211	Control Rods	---
221.212	Control Rod Drives	1400
221.213	Control Rod Drive Missile Shield	---
221.214	CRDM Seismic Supports	---
MAIN HEAT TRANSFER TRANSPORT SYSTEM		
222.1111	Main Coolant Pumps & Drive	65
222.118	Main Coolant Pumps Instr. & Control	2
222.119	Main Coolant Pumps Foundations/Skids	40
222.12	Reactor Coolant Piping System	270
222.1321	Steam Generators	
	- at manway and inside steam generator	5100
	- manway vicinity and general area	110
222.1431	Pressurizer	95
222.1432	Pressurizer Relief Tank	32
222.148	Pressurizer Instrumentation & Control	15
222.149	Pressurizer Foundation/Skids	---
RESIDUAL HEAT REMOVAL SYSTEM		
223.111	RHR Pumps & Drives	45
223.121	RHR Heat Exchangers	35
223.15,16,17	RHR Piping System	65
223.18	RHR Instrumentation & Control	45
SAFETY INJECTION SYSTEM		
223.311	Safety Injection System Pumps and Drives	8
223.312	Boron Injection Pumps and Drive	---
223.331	Accumulator Tank	6
223.332-3	Boron Injection Tanks	70
223.334	Refueling Water Storage Tank	<1
223.35,36,37	Safety Injection System Piping System	55

Table B.4 (Continued)

EEDB Code-of-Account	Description	Average Dose Rate* (mr/hr)
223.38	Safety Injection System Instr. & Control	5
CONTAINMENT SPRAY SYSTEM		
223.411	Containment Spray Pumps & Motors	15
223.421	Containment Spray Heat Exchanger	---
223.431	Containment Spray Additive Tank	<1
223.45,46,47	Containment Spray Piping System	25
223.48	Containment Spray Instrument. & Control	120
COMBUSTIBLE GAS CONTROL SYSTEM		
223.55,56,57	Combustible Gas Control System Piping	10
223.58	Combustible Gas Control System Instr. & Control	10
223.591	Hydrogen Recombiner	10
LIQUID WASTE SYSTEM		
Primary Equipment Drain System		
224.1111-33	Tanks, Pumps, & Motors	250
224.1141	Equipment Drain Filter	50
224.115,116,117	Equipment Drain Piping	35
Miscellaneous Drain Waste System		
224.1211-32	Tanks, Pumps, & Motors	170
224.1241-3	Waste Filters, Demineralizers, & R/O Units	150
224.125,126,127	Misc. Waste Piping System	75
Detergent Waste System		
224.1311-32	Tanks, Pumps, & Motors	2
224.1241-4	Waste Filters, Demineralizers, & R/O Units	3
224.135,136,137	Detergent Waste Piping System	2
Chemical Waste System		
224.1411-31	Tanks, Pumps, & Motors	60
224.144	Purification & Filter Equipment	---
225.145,146,147	Chemical Waste Piping System	13

Table B.4 (Continued)

EEDB Code-of-Account	Description	Average Dose Rate* (mr/hr)
Steam Generator Blowdown System		
224.1511-3	Tanks, Pumps, & Heat Exchangers	3
224.15141-4	Demineralizers and Filters	4
224.151,1516,1517	S.G.B.D. Piping System	8
224.1518	S.G.B.D. Instrument. & Control	2
Regen. Chemical Waste System		
224.1611-32	Tanks, Pumps, & Motors	---
224.1641-3	Demineralizers, Filters, & Evaporator	100
224.165,166,167	Regen. Waste Piping System	---
224.171	Chemical Feed Package (tks., pumps, piping, etc)	2
224.18	Liquid Waste System Instr. & Control	2
RADIOACTIVE GAS WASTE PROCESSING SYSTEM		
224.2111-32	Radioactive Gas Compressors, Drives, & Decay Tanks	7
224.2141	Recombiner Packages	2
224.2142	Gas Waste Vent Filter	3
224.215,216,217	Radioactive Gas Waste Piping System	2
224.218	Radioactive Gas Waste Instr. & Control	---
SOLID WASTE SYSTEM		
Dry Active Waste Volume Reduction		
224.3111-32	Tanks, Pumps, & Motors	120
224.3141	Filters	2000
Volume Reduction and Solidification System		
224.325,326,327	Solid Waste System Piping	7
224.328	Solid Waste System Instrument. & Control	2
FUEL HANDLING AND STORAGE		
225.111-4	New and Spent Fuel Cranes and Hoists	25
225.131-2	Transfer Systems	210
225.31-2	Reactor Service & Fuel Storage Pool Service Platform	13
225.41	New Fuel Storage Racks	<1
225.42	Spent Fuel Storage Racks	---
225.4311-45	Spent Fuel Pool Cleaning & Purification Equipment	85

Table B.4 (Continued)

EEDB Code-of-Account	Description	Average Dose Rate* (mr/hr)
225.435,436,436	Spent Fuel Pool Clean. & Purif. Piping System	15
225.438	Spent Fuel Pool Clean. & Purif. System Instrument & Control	---
INERT GAS SYSTEM		
226.11	H_2/N_2 Gas Supply System	20
REACTOR MAKEUP WATER SYSTEM		
226.311	Reactor Makeup Water Pumps & Drives	4
226.331	Reactor Makeup Water Tank	120
226.35,36,37	Reactor Makeup Water Piping System	20
226.38	Reactor Makeup Water System Instr. & Control	3
COOLANT TREATMENT & RECYCLE		
226.4111-5	Chemical & Volume Control System Pumps, Motors, & Equipment	13
226.4121-8	CVCS Heat Transfer Equipment	80
226.4121-7	CVCS Tanks and Pressure Vessels	140
226.4141-5	CVCS Purification and Filtration Equipment	1800
226.415,416,417	CVCS Piping System	95
226.418	CVCS Instr. & Control	21
226.4191-2	Foundations & Skids for Boron System Equipment	22
226.4211-33	Boron Recycle System Pumps, Motors, Tanks, & Equip.	100
226.4241-7	Boron Recycle System Purif. & Filter Equipment	38
226.425,426,427	Boron Recycle Piping System	---
226.428	Boron Recycle Instrument. & Control	3
FLUID LEAK DETECTION SYSTEM		
226.6	Fluid Leak Detection System	---

Table B.4 (Continued)

EEDB Code-of-Account	Description	Average Dose Rate* (mr/hr)
AUXILIARY COOLING SYSTEMS		
Nuclear Service Water System		
226.7111-2	Safeguards Cooling Tower Pumps, Equip, & Cooling Tower	---
226.715,716,717	Cooling Tower Piping System	80
226.718	Cooling Tower Instr. & Control	---
Primary Component Cooling Water		
226.7211-31	Prim. Comp. Cooling Water Pumps, Motors & Equip. Tanks	2
226.725,726,727	Prim. Comp. Cool. Water Piping System	25
226.728	Prim. Comp. Cool. Water Instr. & Control	---

CRDM = Control Rod Drive Mechanism
CVCS = Chemical and Volume Control System
EEDB = Energy Economic Data Base
mr = millirem
SGBD = Steam Generator Blowdown
* Average of across-plant "typical" values

Table B.5 Occupational dose rates by EEDB classification for BWR systems and components (Beal et al. 1987)

EEDB Code-of-Account	Description	Average Dose Rate* (mr/hr)
REACTOR EQUIPMENT		
221.122-133	Reactor Vessel Closure & Attachments, Studs, Fasteners, Seals, Gaskets, Core Support, and Shroud Assembly	---
221.134	Jet Pump Assemblies	4400
221.135	Fluid Distribution Assemblies	210
221.136	Steam Dryer Assembly	800
221.211	Control Rods	170
221.212	Control Rod Drives	110
MAIN HEAT TRANSFER TRANSPORT SYSTEM		
222.1111	Reactor Recirculation Pumps & Motors	90
222.15,16,17	Recirculation Piping System	240
222.18	Reactor Recirculation Instrument. & Control	200
RESIDUAL HEAT REMOVAL SYSTEM		
223.11	RHR Pumps & Drives	60
223.12	RHR Heat Exchangers	320
223.14	RHR Purification & Filtration Equipment	---
223.15,16,17	RHR Piping System	100
223.18	RHR Instrumentation & Control	80
REACTOR CORE ISOLATION COOLING SYSTEM		
223.21-24	RCIC Pumps, Motors, & Equipment	90
223.25,26,27	RCIC Piping System	100
223.28	RCIC Instrumentation & Control	---
HIGH PRESSURE CORE SPRAY SYSTEM		
223.31-34	HPCS Pumps, Motors, & Strainers	30
223.35,36,37	HPCS Piping System	100
223.38	HPCS Instrumentation & Control	20

Table B.5 (Continued)

EEDB Code-of-Account	Description	Average Dose Rate* (mr/hr)
LOW PRESSURE CORE SPRAY SYSTEM		
223.41-44	LPCS Pumps, Motors, & Strainers	15
223.45,46,47	LPCS Piping System	190
223.48	LPCS Instrumentation & Control	---
COMBUSTIBLE GAS CONTROL SYSTEM		
223.55,56,57	Combustible Gas Control System Piping System	1
223.58	Combust. Gas Control System Instr. & Control	---
223.591	Hydrogen Recombiner	20
STANDBY LIQUID CONTROL SYSTEM		
223.61	Standby Liquid Control System Pump & Motor	1
223.631	SLCS Main Storage Tank	5
223.632	SLCS Test Tank	---
223.65,66,67	SLCS Piping System	55
223.68	SLCS Instrumentation & Control	---
STANDBY GAS TREATMENT SYSTEM		
223.711-722	SGTS Fans, Motors, Heat Transfer & Equipment	---
223.74	SGTS Purification & Filtration Equipment	1
223.75,76,77	SGTS Piping System	---
223.78	SGTS Instrumentation & Control	---
LIQUID WASTE SYSTEM		
High Purity System		
224.111-113	High Purity Collection Tanks, Pumps, Motors, & Equipments	280
224.114	High Purity Waste Filter, Demineralizers	---
224,115,116,117	High Purity Waste Piping System	10

Table B.5 (Continued)

EEDB Code-of-Account	Description	Average Dose Rate* (mr/hr)
Low Purity System		
224.121-123	Low Purity Collection Tanks, Pumps, Motors, & Equipment	190
224.124	Low Purity Waste Evaporators Demineralizers and Filters	---
224.125,126,127	Low Purity Waste Piping System	60
Detergent Waste System		
224.131-133	Detergent Waste Tanks, Pumps, Motors, & Equipment	40
224.134	Detergent Waste Filter, Demineralizers, R/O Unit Package	65
224.135,136,137	Detergent Waste Piping System	2
Chemical Waste System		
224.141-143	Chemical Waste Tanks, Pumps, Motors, & Equipment	40
224.144	Chemical Waste Purification & Filter Equipment	---
224.145,146,147	Chemical Waste Piping System	---
Cleanup Floor Drain Waste System		
224.15	Cleanup Floor Drain Waste Pumps, Motors, & Eq.	---
Chemical Waste Train		
224.16	Regen. Waste Pumps, Motors, Equipment, & Piping	---
224.17	Misc. Radwaste Equipment	---
224.18	Liquid Waste System Instrument & Control	---
RADIOACTIVE GAS WASTE PROCESSING		
224.211-214	Gas Waste Processing System Equipment	---
224.215,216,217	Radioactive Gas Waste Piping System	10
224.218	Radioactive Gas Waste Instrument & Control	---

Table B.5 (Continued)

EEDB Code-of-Account	Description	Average Dose Rate* (mr/hr)
SOLID WASTE SYSTEM		
224.321	Dry Active Waste Volume Reduction Centrifuge, Pumps, Motors, & Equipment	200
224.322-324	Solid Waste System Equipment, Tanks, Purification & Filtration	---
224.325,326,327	Solid Waste System Piping System	250
224.328	Solid Waste System Instruments, & Control	---
FUEL HANDLING AND STORAGE		
225.11	Fuel Handling Equipment, Cranes, & Hoists	20
225.12-14	Fuel Handling Tools, Transfer Systems, & Machines	---
225.2-3	Remote Viewing Equipment, Refueling Platform, Fuel Handling Platform	4
225.41-42	Fuel Storage Equipment & Racks	---
225.431-434	Spent Fuel Pool Cleaning & Purification Pumps Motors, Equipment, Filters, & Demineralizers	400
225.435,436,437	Spent Fuel Pool Clean. & Purif. Piping Systems	40
225.438	Spent Fuel Pool Clean. & Purif. Piping System Instrument & Cont	---
REACTOR WATER CLEANUP SYSTEM		
226.41-42	RWCU System Pumps, Motors, & Heat Exchangers	120
226.43	RWCU Tanks & Pressure Vessels	2
226.44	RWCU Purification & Filter Equipment	80
226.45,46,47	RWCU Piping System	120
226.48	RWCU System Instrument & Control	---
FLUID LEAK DETECTION SYSTEM		
226.6	Fluid Leak Detection System	---
AUXILIARY COOLING SYSTEMS		
226.71	Essential Service Water System	---
226.72	Closed Cooling Water System	---
226.731-732	Plant Chilled Water System Pumps, Motors, & Heat Transfer Equipment	80

Table B.5 (Continued)

EEDB Code-of-Account	Description	Average Dose Rate* (mr/hr)
226.734	Purification & Filtration Equipment	---
226.735,736,737	Plant Chilled Water Piping System	---
226.738	Plant Chilled Water Instrument & Control	---
FEED HEATING SYSTEM		
234.1	Feed Water Heaters	1
234.211	Feed Water Pumps	2
234.25	Feed Water Piping	70
234.26	Feed Water Valves	850
OTHER TURBINE PLANT EQUIPMENT		
235.115	Main Vapor System Piping	50
235.116	Main Vapor System Valves	260
235.117	Main Vapor System Misc. Piping	2
235.118	Main Vapor System Instrument & Control	100
235.21	Main Steam/Reheat Vents & Drains	16
235.35	T.B. Closed Cooling Water System Piping	20
235.4	Demin. Water Makeup System	1
235.631	Neutralization System Tank	1

HPCS = High Pressure Core Spray
LPCS = Low Pressure Core Spray
mr = millirem
RCIC = Reactor Core Isolation Cooling
RWCU = Reactor Water Cleanup
SGTS = Standby Gas Treatment System
SLCS = Standby Liquid Control System
TB = Turbine Building
* Average of across-plant "typical" values

The NRC maintains occupational exposure data in the Radiation Exposure Information and Reporting System (REIRS). The following six categories of licensees have reported occupational exposure data:

1. power reactors (LWRs)
2. industrial radiographers
3. fuel processors, fabricators, and reprocessors
4. manufacturers and distributors of byproduct material
5. independent spent fuel storage installations
6. facilities for land disposal of low level waste.

Annual reports for 1993 were received from 360 NRC licensees, of which 114 were operators of power reactors. Raddatz and Hagemeyer (1995) have compiled and processed the 1993 and previous years' data in the second document related to occupational exposure experience of NRC-licensed facilities. No data from Agreement State licensees are included in the report.

Data limitations are discussed in Chapter 2 of Raddutz and Hagemeyer (1995), prior to the presentation of the processed results. Annual exposure data are given for the six facility classes listed above. Annual occupational exposure data for 1991-1993 are tabulated in Tables B.6 to B.8 for industrial radiographers, manufacturers and distributors of byproduct material, and fuel fabricators. For low level waste disposers and independent spent fuel storers, the annual number of workers with measurable doses and the collective and average doses for 1991-1993 are shown in Table B.9. For power reactors, the annual occupational exposure data from 1973 through 1993 are presented for BWRs, PWRs, and LWRs in Tables B.10 to B.12, respectively.

Chapter 4 of Raddatz and Hagemeyer (1995) examines occupational exposure data at LWRs in more detail. Included are annual whole body dose distributions; plant rankings by the collective dose per reactor; and the average, median, and extreme values of the collective dose per reactor. Table B.13 lists the numbers of employees and collective and average doses for 1993 as a function of occupation and personnel type for LWRs.

B.4 Calculational Method for Table 5.3, "Expected Population Doses for Power Reactor Release Categories"

The information in this section is from the letter report, "MACCS Economic Consequence Tables for Regulatory Applications" (Young 1995) prepared for the NRC. It provides an overview of the calculations and assumptions used in the preparation of Table 5.3. Young's results represent mean results conditional on the occurrence of each release category.

B.4.1 Introduction

The MACCS Version 1.5.11.1 was used to complete the calculations performed for the analysis reported in Young (1995). MACCS was designed to assess the potential off-site dose, health, and economic consequences of postulated nuclear power plant (NPP) accidents. Interdiction criteria specified by the user determine the dose levels at which long-term mitigative actions are implemented.

Table B.6 1991-1993 annual occupational exposure information for industrial radiographers (Raddatz and Hagemeyer 1995)

Year	Type of License	Number of Licenses	Number of Monitored Workers	Workers with Measurable Doses	Collective Dose (person-cSv or person-rem)	Average Measurable Dose (cSv or rems)
1993	Single location	39	673	183	23	0.13
	Multiple locations	137	4,046	2,824	1,603	0.57
	Total	176	4,721	3,007	1,627	0.54
1992	Single location	48	771	182	37	0.20
	Multiple locations	198	5,392	4,082	1,827	0.45
	Total	246	6,703	4,265	1,864	0.44
1991	Single location	56	822	338	44	0.13
	Multiple location	192	5,998	4,311	2,116	0.49
	Total	248	6,820	4,649	2,160	0.46

Table B.7 1991-1993 annual occupational exposure information for byproduct manufacturers and distributors (Raddatz and Hagemeyer 1995)

Year	Type of License	Number of Licenses	Number of Monitored Workers	Workers with Measurable Doses	Collective Dose (person-cSv or person-rem)	Average Measurable Dose (cSv or rem)
1993	M & D-Broad	8	2,455	925	512	0.55
	M & D-Limited	50	2,458	1,329	168	0.13
	Total	58	4,913	2,254	680	0.30
1992	M & D-Broad	11	3,632	1,674	718	0.43
	M & D-Limited	56	1,578	576	72	0.13
	Total	67	5,210	2,250	784	0.35
1991	M & D-Broad	12	3,732	1,443	674	0.47
	M & D-Limited	46	1,198	513	47	0.09
	Total	58	4,930	1,956	721	0.37

Table B.8 1991-1993 annual occupational exposure information for fuel fabricators (Raddatz and Hagemeyer 1995)

Year	Type of License	Number of Licenses	Number of Monitored Workers	Workers with Measurable Doses	Collective Dose (person-rems or person-cSv)	Average Measurable Dose (rems or cSv)
1993	Uranium Fuel Fab	8	9,649	2,611	339	0.13
1992	Uranium Fuel Fab	11	8,439	5,061	545	0.11
1991	Uranium Fuel Fab	11	11,702	3,929	378	0.10

Table B.9 Annual occupational doses for low level waste disposal and spent fuel storage facilities, 1991-1993 [Raddatz and Hagemeyer 1995]

Licensee	Year	Workers with measurable doses	Collective dose (person-cSv)	Average measurable dose (cSv)
Low Level Waste Disposers	1991	147	39	0.27
	1992	82	37	0.45
	1993	76	21	0.27
Independent Spent Fuel Storers	1991	24	4	0.17
	1992	85	11	0.13
	1993	52	14	0.26

Table B.10 Summary of 1973-1993 annual occupational exposure information reported by commercial BWRs (Raddatz and Hagemeyer 1995)

Year	Number of Reactors Included	Annual Collective Doses (person-cSv or person-rem)	No. of Workers With Measurable Doses	Gross Electricity Generated (MW-yr)	Average Dose Per Worker (cSv or rem)	Average Collective Dose Per Reactor (person-cSv or person-rem)	Average No. Personnel With Measurable Doses Per Reactor	Average Collective Dose per MW-yr (person-cSv /MW-yr)	Average Electricity Generated Per Reactor (MW-yr)	Average Maximum Dependable Capacity Net (MWe)
1973	12	4,564	5,340	3,393.9	0.85	380	445	1.34	283	438
1974	14	7,095	8,769	4,060.2	0.81	507	626	1.75	290	485
1975	18	12,611	14,607	5,786.4	0.86	701	812	2.18	321	595
1976	22	12,300	16,604	8,137.9	0.74	559	755	1.51	370	630
1977	23	19,041	21,388	9,102.5	0.89	828	930	2.09	396	637
1978	25	15,273	20,278	11,856.0	0.75	611	811	1.29	474	660
1979	25	18,325	25,245	11,671.0	0.73	733	1,010	1.57	467	660
1980	26	29,530	34,094	10,868.2	0.87	1,136	1,311	2.72	418	663
1981	26	25,471	34,755	10,899.2	0.73	980	1,337	2.34	419	663
1982	26	24,437	32,235	10,614.6	0.76	940	1,240	2.30	408	663
1983	26	27,455	33,473	9,730.1	0.82	1,056	1,287	2.82	374	663
1984	27	27,097	41,105	10,019.2	0.66	1,004	1,522	2.70	371	754
1985	29	20,573	38,237	12,284.0	0.54	709	1,319	1.67	424	775
1986	30	19,349	37,928	12,102.1	0.51	645	1,264	1.60	403	786
1987	32	16,717	41,737	15,109.0	0.40	522	1,304	1.11	472	832
1988	34	17,983	40,305	16,665.4	0.45	529	1,185	1.08	490	845
1989	36	15,549	44,360	17,543.5	0.35	432	1,232	0.89	487	857
1990	37	15,780	41,577	21,336.1	0.38	426	1,124	0.74	577	862
1991	37	12,005	38,492	21,505.8	0.31	324	1,040	0.56	581	860
1992	37	13,309	42,095	20,592.2	0.32	360	1,138	0.65	557	859
1993	37	12,221	38,309	21,995.6	0.31	330	1,062	0.56	594	798

*Includes only those reactors that had been in commercial operation for at lease one full year as of December 31 of each of the indicated years, and all figures are uncorrected for multiple reporting of transient individuals.

Table B.11 Summary of 1973-1993 annual occupational exposure information reported by commercial PWRs (Raddatz and Hagemeyer 1995)

Year	Number of Reactors Included	Annual Collective Doses (person-cSv or person-rem)	No. of Workers With Measurable Doses	Gross Electricity Generated (MW-yr)	Average Dose Per Worker (cSv or rem)	Average Collective Dose Per Reactor (person-cSv or person-rem)	Average No. Personnel With Measurable Doses Per Reactor	Average Collective Dose per MW-yr (person-cSv /MW-yr)	Average Electricity Generated Per Reactor (MW-yr)	Average Maximum Dependable Capacity Net (MWe)
1973	12	9,398	9,440	3,770.2	1.00	783	787	2.49	314	544
1974	19	6,555	9,370	6,530.7	0.70	345	493	1.00	344	591
1975	26	8,268	10,884	11,982.5	0.76	318	419	0.69	461	647
1976	30	13,807	17,588	13,325.0	0.79	460	586	1.04	444	701
1977	34	13,467	20,878	17,345.8	0.65	396	614	0.78	510	688
1978	39	16,528	25,700	19,840.5	0.64	424	659	0.83	509	706
1979	42	21,657	38,828	18,255.0	0.56	516	924	1.19	435	746
1980	42	24,265	46,237	18,289.3	0.52	578	1,101	1.33	435	746
1981	44	28,673	47,351	20,553.7	0.61	652	1,076	1.40	467	752
1982	48	27,753	52,146	22,140.6	0.53	578	1,086	1.25	461	777
1983	49	29,017	52,173	23,195.5	0.56	592	1,065	1.25	473	785
1984	51	28,138	56,994	26,478.4	0.49	552	1,118	1.06	519	809
1985	53	22,469	54,633	29,470.7	0.41	424	1,031	0.76	556	820
1986	60	23,032	62,995	33,593.0	0.37	384	1,050	0.69	560	878
1987	64	23,684	62,597	37,007.3	0.38	370	978	0.64	578	900
1988	68	22,786	62,921	42,929.7	0.36	335	925	0.53	631	885
1989	71	20,381	63,894	44,679.5	0.32	287	900	0.46	629	897
1990	73	20,812	67,081	46,955.6	0.31	285	919	0.44	643	907
1991	74	16,510	60,269	51,942.6	0.27	223	814	0.32	702	913
1992	73	15,985	61,048	53,419.8	0.26	219	836	0.30	732	923
1993	73	14,142	56,588	50,480.6	0.25	194	775	0.28	692	919

*Includes only those reactors that had been in commercial operation for at least one full year as of December 31 of each of the indicated years, and all figures are uncorrected for multiple reporting of transient individuals.

Table B.12 Summary of 1973-1993 annual occupational exposure information reported by commercial LWRs (Raddatz and Hagemeyer 1995)

Year	Number of Reactors Included	Annual Collective Doses (person-cSv or person-rem)	No. of Workers With Measurable Doses	Gross Electricity Generated (MW-yr)	Average Dose Per Worker (cSv or rem)	Average Collective Dose Per Reactor (person-cSv or person-rem)	Average No. Personnel With Measurable Doses Per Reactor	Average Collective Dose per MW-yr (person-cSv /MW-yr)	Average Electricity Generated Per Reactor (MW-yr)	Average Maximum Dependable Capacity Net (MWe)	Percent of Maximum Dependable Capacity Achieved
1973	24	13,962	14,780	7,164.1	0.94	582	616	1.95	299	491	61%
1974	33	13,650	18,139	10,590.9	0.75	414	550	1.29	321	546	59%
1975	44	20,879	25,491	17,768.9	0.82	475	579	1.18	404	626	65%
1976	52	26,107	34,192	21,462.9	0.76	502	658	1.22	413	671	62%
1977	57	32,508	42,266	26,448.3	0.77	570	742	1.23	464	667	70%
1978	64	31,801	45,978	31,696.5	0.69	497	718	1.00	495	688	72%
1979	67	39,982	64,073	29,926.0	0.62	597	956	1.34	447	714	63%
1980	68	53,795	80,331	29,157.5	0.67	791	1,181	1.84	429	714	60%
1981	70	54,144	82,106	31,452.9	0.66	773	1,173	1.72	449	719	63%
1982	74	52,190	84,381	32,755.2	0.62	705	1,140	1.59	443	737	60%
1983	75	56,472	85,646	32,925.6	0.66	753	1,142	1.72	439	743	59%
1984	78	55,235	98,099	36,497.6	0.56	708	1,258	1.51	468	790	59%
1985	82	43,042	92,870	41,754.7	0.46	525	1,133	1.03	509	804	63%
1986	90	42,381	100,923	45,695.1	0.42	471	1,121	0.93	508	847	60%
1987	96	40,401	104,334	52,116.3	0.39	421	1,087	0.78	543	877	62%
1988	102	40,769	103,226	59,595.1	0.39	400	1,012	0.68	584	871	67%
1989	107	35,930	108,254	62,223.0	0.33	336	1,012	0.58	582	883	66%
1990	110	36,592	108,658	68,291.7	0.34	333	988	0.54	621	892	70%
1991	111	28,515	98,761	73,448.4	0.29	257	890	0.39	662	895	74%
1992	110	29,294	103,143	74,012.0	0.28	266	938	0.40	673	901	75%
1993	110	26,363	95,896	72,476.2	0.27	240	872	0.36	659	878	75%

*Includes only those reactors that had been in commercial operation for at least one full year as of December 31 of each of the indicated years, and all figures are uncorrected for multiple reporting of transient individuals.

Table B.13 1993 numbers of employees and collective and average doses by occupation and personnel type at LWRs (Raddatz and Hagemeyer 1995)

WORK AND JOB FUNCTION	STATION EMPLOYEES PERSON-cSv	STATION EMPLOYEES % OF TOTAL	UTILITY EMPLOYEES PERSON-cSv	UTILITY EMPLOYEES % OF TOTAL	CONTRACT WORKERS PERSON-cSv	CONTRACT WORKERS % OF TOTAL	TOTAL PER WORK FUNCTION PERSON-cSv	TOTAL PER WORK FUNCTION % OF TOTAL
BOILING WATER REACTORS								
REACTOR OPS & SURV	1,209	9.9%	81	0.7%	459	3.8%	1,749	14.3%
ROUTINE MAINTENANCE	2,140	17.5%	199	1.6%	3,788	31.1%	6,127	50.2%
IN-SERVICE INSPECTION	107	0.9%	35	0.3%	723	5.9%	865	7.1%
SPECIAL MAINTENANCE	659	5.4%	175	1.4%	1,453	11.9%	2,287	18.8%
WASTE PROCESSING	154	1.3%	9	0.1%	128	1.0%	291	2.4%
REFUELING	241	2.0%	97	0.8%	539	4.4%	877	7.2%
TOTAL	4,510	37.0%	596	4.9%	7,090	58.1%	12,196	100.0%
PRESSURIZED WATER REACTORS								
REACTOR OPS & SURV	747	5.2%	31	0.2%	470	3.3%	1,249	8.6%
ROUTINE MAINTENANCE	1,590	11.0%	608	4.2%	2,873	19.9%	5,072	35.1%
IN-SERVICE INSPECTION	167	1.2%	188	1.3%	1,652	11.4%	2,006	13.9%
SPECIAL MAINTENANCE	592	4.1%	192	1.3%	2,805	19.4%	3,589	24.8%
WASTE PROCESSING	161	1.1%	9	0.1%	207	1.4%	378	2.6%
REFUELING	604	4.2%	254	1.8%	1,305	9.0%	2,163	15.0%
TOTAL	3,862	26.7%	1,282	8.9%	9,312	64.4%	14,457	100.0%
ALL LIGHT WATER REACTORS								
REACTOR OPS & SURV	1,957	7.3%	112	0.4%	929	3.5%	2,997	11.2%
ROUTINE MAINTENANCE	3,730	14.0%	807	3.0%	6,661	25.0%	11,199	42.0%
IN-SERVICE INSPECTION	274	1.0%	222	0.8%	2,375	8.9%	2,871	10.8%
SPECIAL MAINTENANCE	1,251	4.7%	367	1.4%	4,258	16.0%	5,877	22.0%
WASTE PROCESSING	316	1.2%	18	0.1%	335	1.3%	669	2.5%
REFUELING	845	3.2%	351	1.3%	1,844	6.9%	3,040	11.4%
TOTAL	8,373	31.4%	1,878	7.0%	16,402	61.5%	26,653	100.0%

The following scenario assumptions and input data were selected by Young and NRC staff as a basis for the analysis:

1. 80th percentile weather data, as defined in draft NUREG/CR-6295 (Davis et al. 1995) were used as the meteorological input data.

2. The site data for the analysis were chosen to represent an 80th percentile NPP site in terms of the population density surrounding the site.

3. Calculations were performed for each of BWR and PWR source terms defined by Nourbakhsh (1992) as representative of severe LWR accident source terms.

4. NUREG-1150 (NRC 1991) emergency response assumptions were implemented as reported in NUREG/CR-4551 (Sprung et al. 1990).

5. The values assigned to the MACCS food ingestion model input parameters PSCMILK, PSCOTH, and GCMAXR are those values recommended by Mubayi as corrections to the values used in the NUREG-1150 analyses (Mubayi 1994). The PSCMILK and PSCOTH parameters define the levels of ground contamination above which crops are interdicted for accidents occurring during the growing season. GCMAXR defines the levels of ground contamination above which land is restricted from agricultural production.

6. Consequence values represent mean results and consequences within a 50-mile radius of the release.

B.4.2 MACCS Input Parameter Assumptions

NUREG-1150 MACCS input parameter values as provided and discussed in Sprung et al. (1990) were applied in the calculations except for those parameters discussed below. In addition, the values recommended by Mubayi (1994) as corrections to the NUREG-1150 values for MACCS input parameters PSCMILK, PSCOTH, and GCMAXR were used.

Meteorological Data

One year of meteorological data from Charleston, South Carolina was selected from Davis et al. (1995) to represent the conservative case (80th percentile) weather data. Wind roses were defined in the EARLY input file. The peak sector was assigned a 15% frequency, the adjacent sectors a frequency of 11%, and the remaining sectors were assigned a frequency of 4.85%. The wind rose sector containing the maximum population for the site was defined as the peak sector. The definition of the wind roses for the site is consistent with the method used to define the 80th percentile wind rose in Davis (1995).

Site Data

Population and land use, data for the Peach Bottom NPP, as defined by the SECPOP90 software package, was implemented in this analysis (Humphreys 1995). The population data provided by SECPOP90 is based on 1990 data. Peach Bottom is at the 84th percentile in terms of U.S. NPP site population density within 30 miles and the 79th percentile in terms of population density within 20 miles (Young 1994). Peach bottom is located within the state of Pennsylvania.

Source Term

Calculations were performed for all of the source-term release categories defined by Nourbakhsh (1992). The accident progression characteristics of these release categories were extracted from Gregory (1995). The analyst is referred to these two references for a detailed discussion of the derivation and application of these source term release categories.

Protection Actions

The duration of the emergency phase was defined as four rather than seven days as in the NUREG-1150 analysis.

The dose criterion for hot spot and normal relocation during the emergency phase was defined as 0.01 Sv. The values assigned to these variables in NUREG-1150 were 0.5 Sv and 0.25 Sv, respectively.

The remaining emergency response input parameter values implemented in Young's analysis are the same as those applied in the NUREG-1150 Peach Bottom analysis. Ninety nine and one-half percent of the population is assumed to evacuate within 10 miles of the NPP. The evacuating population is assumed to disappear at 20 miles from the NPP. The delay time between the notification of off-site emergency response officials to initiate protective actions (input parameter OALARM) and the beginning of evacuation is assumed to be 1.5 hrs. The population is assumed to evacuate at a speed of 4.8 meters per second. It is assumed that the 0.5% of the population not evacuating was relocated based on 0.01 Sv dose criterion for relocation.

Discounting

The MACCS code economic model is not designed to discount doses incurred in the years following the accident release. Consequently, it was not possible to include discounting in the calculations performed for Young's analysis without completing major modifications to the MACCS code.

"Long-term" doses incurred over the period of time following the first year after the accident were tabulated to assess the portion of the total population dose which could be significantly impacted by the discounting of accident costs. The integration period for the calculation of the population-dose resulting from groundshine and resuspension during the long-term phase is 1E+6 years. The level of contamination modeled in the long-term environment is dependent upon the half-life of the released radionuclides and the weathering terms input by the user. The population dose received from food ingestion is dependent upon the long-term transfer factor for each nuclide and crop of concern. The consequences calculated in Young's analysis are based on 1990 census and statistical data applied for the calculation of population dose and per person. The data indicate that the population dose incurred over the long term comprises between 50% and 93% of the total population dose for 94% of the source-term categories.

Appendix C

Supplemental Information for Non-Reactor Regulatory Analyses

Appendix C

Supplemental Information for Non-Reactor Regulatory Analyses

This appendix provides supplemental information for performing a regulatory analysis for non-reactor facilities, both fuel and non-fuel cycle. The procedure is essentially the same as that described in Chapters 2 through 5. However, the variety of facility types and the relatively non-integrated sets of available information lend difficulty to performing a value-impact analysis in the more straightforward manner as that for power reactors. This appendix represents a compilation of information to aid the preparation of a regulatory analysis applicable to non-reactor facilities. The nature of regulatory analyses for non-reactor facilities will continue to evolve as more analyses are performed and more information becomes available.

As discussed in Section 4.3, the analyst should strive to use quantitative attributes when performing a regulatory analysis for non-reactor licensees. The Commission has determined, for example, that PRA should be used for analyses involving materials licensees when the potential safety consequences warrant its use, sufficient data are available, and the licensees can reasonably be expected to be capable of performing such analyses (NRC 1996c). However, it should be recognized that there are many benefits of improved regulation of non-reactor facilities that do not lend themselves to quantification. For example, increased confidence in the margin of safety may be a nonquantifiable benefit of a particular proposed regulatory requirement. As noted in Section 4.5, nonquantifiable benefits and costs can be significant elements of a regulatory analysis and need to be considered by the analyst and decision maker as appropriate.

The approach taken in this appendix has been to first review the relevant literature in sufficient detail to permit the regulatory analyst to judge the value of each report (see Sections C.3-C.11). Tables and figures containing potentially useful data have been extracted from the reports and included in this appendix. Reviews of non-reactor regulatory analyses that have been performed comprise Sections C.8-C.11.

Based on the review of the literature, guidance on the performance of the value-impact analysis portion of a regulatory analysis has been developed. It is presented at the front of this appendix in the form of composite listings developed from the tables and figures to focus the relevant data for the analyst (see Sections C.1 and C.2). These should be used to direct the analyst's search for information that may be needed in the value-impact analysis. In some cases, the analyst may find values differing by several orders of magnitude, presumably the result of varying assumptions between the source documents. The analyst may wish to consult the references before selecting which value to use, especially since these tables are intended to direct analysts to appropriate sources, rather than to be used prima facie.

To assist the analyst, the tables and figures from which the data have been extracted to form these composites are referenced with the data. These composites are not intended to replace the original tables and figures, or the reports from which these tables and figures have been extracted. The analyst needing more detail should refer to the tables and figures, or the actual reports, directly. The analyst should also be aware that the composite listings combine data from multiple tables and figures, most of which were developed with differing sets of assumptions. Thus, the analyst may wish to use a specific table or figure, rather than a composite listing, when performing the analysis.

Two relatively recent data sources not cited in the Appendix C tables are also potentially available to the analyst. The first data source is the Nuclear Material Events Database (NMED) administered by the NRC Office for Analysis and

Evaluation of Operational Data (AEOD). The NMED contains information from materials, fuel cycle, and nonpower reactor licensees on events such as personnel radiation overexposures, medical misadministrations, losses of radioactive material, and potential criticality events. These data sources can be used to supplement and, when appropriate, supersede the information in the Appendix C tables. The second is the Bulletin 91-01 Event Tracking System administered by NMSS. NRC's Bulletin 91-01 requested reports from fuel cycle licensees relating to 1) loss or substantial degradation of a criticality safety control, and 2) conditions with a possible criticality hazard which have not been analyzed.

The analyst should also be aware of Attachment 3 to the CRGR Charter which provides guidance on the application of the "substantial increase" standard at 10 CFR 50.109(a)(3). Footnote 13 in Revision 6 of the CRGR Charter states that although 10 CFR 50.109 does not directly apply to facilities not licensed under Part 50, "much of the guidance in Attachment 3 is applicable and should be considered by the staff in evaluating qualitative factors that may contribute to the justification of proposed backfitting actions directed to nuclear materials facilities/activities."

C.1 Facility Classes

Review of the literature discussed in Sections C.3-C.11 suggested that non-reactor facilities would most appropriately be divided into two groups: fuel-cycle facilities and non-fuel cycle facilities. This grouping is defined in this section and employed throughout the presentation on attribute quantification in Section C.2.

C.1.1 Fuel Cycle Facilities

A division of fuel cycle facilities was made by Pelto et al. in the unpublished PNNL study from 1983 reviewed in Section C.6. The facilities were classified into the following 13 groups:

1. mining
2. milling
3. conversion
4. enrichment
5. fuel fabrication
6. MOX (mixed oxide) fuel refabrication
7. fuel reprocessing
8. spent fuel storage
9. HLW (high level waste) storage
10. TRU (transuranic) waste storage
11. geologic waste disposal
12. shallow land waste disposal
13. transportation.

Table C.S.1, extracted from Schneider et al. (1982), provides a summary description of each of these 13 groups. It is accompanied by Figure C.1, also extracted from Schneider et al. (1982), which shows the uranium process flow and relationship among the 13 groups.

Potential accidents during uranium mining do not yield much higher releases than incurred during normal operation. Philbin et al. (1990) (see Section C.4), Pelto et al. (see Section C.6), McGuire (1988) (see Section C.8), and the EPA (1983) (see Section C.9) addressed uranium mills. The following tables present data related to uranium milling: C.4,

C.48, C.70, C.77, and C.87-C.92. Figure C.4 also provides information on uranium milling. UF_6 conversion was examined by Philbin et al. (1990), Pelto et al., and McGuire (1988). Tables C.5, C.49, and C.70 present data related to UF_6 conversion.

Enrichment facilities have been addressed by Pelto et al. and McGuire (1988). Tables C.50 and C.70 provide data. Fuel fabrication has been examined by Philbin et al. (1990), Pelto et al., Mishima et al. (1983) (see Section C.7), McGuire (1988), and Ayer et al. (1988) (see Section C.11). Relevant data are presented in the following tables: C.6, C.51, C.70-C.76, C.78-C.79, and C.103-C.104. Pelto et al. and Ayer et al. (1988) have addressed MOX fuel refabrication. Seven tables, C.52-C.55, C.70, and C.103-C.104, contain MOX information. Fuel reprocessing was examined by Pelto et al., McGuire (1988), and Ayer et al. (1988). Tables C.56-C.60, C.70, C.80, C.103, and C.105 provide relevant data. Spent fuel storage was examined by Daling et al. (1990) (see Section C.5, Pelto et al., McGuire (1988), Jo et al. (1989) (see Section C.10), and Ayer et al. (1988). Data are provided in the following tables: C.26-C.32, C.44-C.45, C.61, C.70, C.81, C.93-C.103, and C.107.

Philbin et al. (1990), Pelto et al., and Ayer et al. (1988) addressed HLW storage. The following tables contain relevant information: C.62, C.70, C.103, and C.106. No literature on TRU storage was reviewed. Daling et al. (1990) and Pelto et al. examined geologic waste disposal. Data are presented in the following tables: C.9-C.25, C.42-C.45, C.63, and C.70. Figure C.3 also provides data for geologic waste disposal. No literature on shallow land waste disposal was reviewed. Daling et al. (1990) and Pelto et al. addressed transportation. Tables C.33-C.45 and C.64-C.70 contain relevant information.

C.1.2 Non-Fuel Cycle Facilities

A division of non-fuel cycle facilities is in NUREG/CR-4825 (Ostmeyer and Skinner 1987) (see Section C.3). The facilities were classified into the following four groups based on the application/use of the licensed nuclear material:

- research, teaching, experimental, diagnostic, and therapeutic facilities, including hospitals, universities, medical groups, and physicians
- measurement, calibration, and irradiation facilities, including users of sealed sources
- manufacturing and distribution facilities employing byproduct and source materials, such as radiopharmaceuticals
- service organizations, including waste repackagers, processors, and disposers.

Ostmeyer and Skinner (1987) (see Section C.3) examined all four groups. Relevant data are provided in Tables C.1-C.3 and Figure C.2. Philbin et al. (1990) addressed large manufacturers/distributors of nuclear byproducts (Group 3) and waste warehouses (Group 4). Tables C.7 and C.8 present information. McGuire (1988) examined Groups 1, 3, and 4. Relevant data are provided in Tables C.82-C.84 (Group 1), C.85 (Group 3), and C.86 (Group 4).

C.2 Quantification of Attributes

The procedure to quantify the attributes appropriate to the value-impact analysis portion of a regulatory analysis for non-reactor facilities is discussed in Section 5.7. Based on the information from the literature survey (see Sections C.3-C.11), specific quantitative data are presented in this section for use with the following six attributes when performing the value-impact analysis portion of a non-reactor regulatory analysis:

1. public health (accident)
2. public health (routine)
3. occupational health (accident)
4. occupational health (routine)
5. offsite property
6. onsite property.

Note that the last two attributes are discussed together rather than separately due to the nature of the available information.

C.2.1 Public Health (Accident)

The quantification of public health (accident) involves both frequencies and population doses associated with accident scenarios. Because non-reactor facilities tend to be much simpler in system configuration than power reactors, the number of potential accidents is much smaller, simplifying the scope of the accident analysis. However, accident frequency and population dose data are typically less available than for power reactors. This section extracts relevant frequency and dose data from Sections C.3-C.10. Also included are estimates of the total risk from accidents, as available.

C.2.1.1 Accident Frequencies

The literature review yielded accident frequencies for both fuel and non-fuel cycle, non-reactor facilities. Composite listings have been assembled in this section.

Fuel Cycle Facilities

Accident frequencies have been estimated for ten of the 13 non-reactor fuel cycle facilities listed in Section C.1. Only mining, TRU waste storage, and shallow land waste disposal have been excluded (see Section C.1.1).

For **URANIUM MILLING**, estimated frequencies for eight accident scenarios are in Table C.4, both as best estimates and 80% confidence bounds. Three of these scenario frequencies are also estimated in Table C.48, as follows:

1. solvent extraction fire = 4E-4 to 0.003/facility-yr
2. retention pond failure with slurry release = 0.04/facility-yr
3. slurry release from distribution pipe = 0.01/facility-yr.

Except for the second, these estimates lie at least partially within the uncertainty ranges listed in Table C.4. For the retention pond failure with slurry release, the estimate of 0.04/facility-yr slightly exceeds the upper bound in Table C.4.

For **UF_6 CONVERSION**, estimated frequencies for nine accident scenarios are in Table C.5, both as best estimates and 80% confidence bounds. Six of these scenario frequencies are also estimated in Table C.49, as follows:

1. uranyl nitrate evaporator explosion = 1E-4 to 0.001/facility-yr

2. hydrogen explosion during reduction = 0.001 to 0.05/facility-yr

3. solvent extraction fire = 4E-4/facility-yr

4. release from UF_6 cylinder = 0.03/facility-yr

5. distillation valve rupture = 0.05/facility-yr

6. waste pond release = 0.02/facility-yr.

Except for the last, these estimates lie within the uncertainty ranges listed in Table C.5. For the waste pond release, the estimate of 0.02/facility-yr is slightly below the lower bound in Table C.5.

For **ENRICHMENT**, estimated frequencies for four accident scenarios are in Table C.50. For **FUEL FABRICATION**, estimated frequencies for ten accident scenarios are in Tables C.6 and C.51. Table C.6 lists them as both best estimates and 80% confidence bounds. The estimates for the ten scenarios are as follows [parentheses () denote confidence bounds from Table C.6]:

1. minor facility release = 0.21/facility-yr (0.15 to 0.32) from Table C.6

2. large spills due to accidents or natural phenomena = 0.024/facility-yr (0.015 to 0.044) from Table C.6

3. transportation accident = 0.0028/facility-yr (0.0026 to 0.0030) from Table C.6

4. hydrogen explosion in reduction furnace = 0.01/facility-yr (0.002 to 0.05) from Table C.6 and 0.002 to 0.05/facility-yr from Table C.51

5. major fire = 2.1E-4/facility-yr (1.2E-4 to 5.1E-4) from Table C.6 and 2E-4/facility-yr from Table C.51

6. criticality = 0.0033/facility-yr (5.0E-4 to 0.011) from Table C.6 and 8E-4/facility-yr from Table C.51

7. release from hot UF_6 cylinder = 0.021/facility-yr (0.011 to 0.081) from Table C.6 and 0.03/facility-yr from Table C.51

8. fire in a roughing filter = 0.01/facility-yr from Table C.51

9. failure of valves and piping = 0.004/facility-yr from Table C.51

10. waste retention pond failure = 0.002 to 0.02/facility-yr from Table C.51.

For **MOX FUEL REFABRICATION**, estimated frequencies for 14 accident scenarios are in Tables C.53-C.55. The estimates for these scenarios are listed below. Note that the values listed from Table C.53 are those associated with normal high efficiency particulate air (HEPA) filtration. The corresponding estimates with HEPA filter failure are 1,000 times lower:

1. > design basis earthquake = 5E-6/facility-yr (Table C.54)

2. aircraft crash = 3E-7/facility-yr (C.54) and 1.5E-9/facility-yr (C.55)

3. hydrogen explosion in ROR (reduction-oxidation reactor) = 0.002 to 0.05/facility-yr (C.53), 0.001/facility-yr (C.54), and 0.005/facility-yr (C.55)

4. hydrogen explosion in sintering furnace = 0.001/facility-yr (C.54) and 0.005/facility-yr (C.55)

5. hydrogen explosion in wet scrap = 0.01/facility-yr (C.53), 0.005/facility-yr (C.54), and 3E-4/facility-yr (C.55)

6. ion-exchange resin fire = 1E-4 to 0.1/facility-yr (C.53) and 5E-4/facility-yr (C.54)

7. loaded final filter failure = 2E-4/facility-yr (C.54)

8. criticality = 3E-5 to 0.008/facility-yr (C.53), 6E-5/facility-yr (C.54), and 6E-5/facility-yr (C.55)

9. powder shipping container spill = 3E-5/facility-yr (C.55)

10. exothermic reactions in powder storage = 1.5E-6/facility-yr (C.55)

11. major facility fire = 2E-4/facility-yr (C.53)

12. fire in waste compaction glove box = 0.01/facility-yr (C.53)

13. glove failure = 1/facility-yr (C.53)

14. severe glove box damage = 0.01/facility-yr (C.53).

For **FUEL REPROCESSING**, estimated frequencies for 20 accident scenarios are in Tables C.57-C.60. The estimates for these scenarios are listed below. Note that values from Table C.57 are those associated with normal HEPA filtration. The corresponding estimates with HEPA filter failure are generally 1,000 times lower, except where noted. Also note that values from Table C.59 assume HEPA filter failure, except where noted.

1. loss of fuel storage pool water = 3E-6/facility-yr (Table C.58)

2. ion-exchange resin fire and explosion = 1E-4 to 0.1/facility-yr (C.57, with frequencies 1E+5 times lower with HEPA filter failure) and 5E-4/facility-yr (C.58)

3. criticality = 3E-5 to 0.008/facility-yr (C.57), 6E-5/facility-yr (C.58), and 2E-5/facility-yr (C.59, without HEPA filter consideration)

4. hydrogen explosion in high aqueous feed (HAF) tank = 1E-5/facility-yr (C.57, with frequency 100 times lower with HEPA failure), 7E-5/facility-yr (C.58), 3E-6/facility-yr (C.59), and 1E-5/facility-yr (C.60)

5. fire in low level waste = 0.01/facility-yr (C.58)

6. fuel assembly drop = 0.01 to 0.1/facility-yr (C.57), 0.002/facility-yr (C.58), 0.0012/facility-yr (C.59, without HEPA consideration), and 0.01/facility-yr (C.60)

7. explosion in HLW calciner = 1E-6/facility-yr (C.57), 5E-10/facility-yr (C.58, assuming HEPA filter failure), 2E-7/facility-yr (C.59), and 1E-6/ facility-yr (C.60)

8. krypton cylinder rupture = 1E-4/facility-yr (C.58) and 1.3E-4/facility-yr (C.59, without HEPA consideration)

9. explosion in high activity waste (HAW) concentrator = 1E-5/facility-yr (C.57), 4E-8/facility-yr (C.59), and 1E-5/ facility-yr (C.60)

10. solvent fire in codecontamination cycle = 1E-6 to 1E-4/facility-yr (C.57) and 1E-6/facility-yr (C.60)

11. explosion in low activity waste (LAW) concentrator = 1E-4/facility-yr (C.57) and 1E-4/facility-yr (C.60)

12. explosion in iodine absorber = 2E-4/facility-yr (C.57, without HEPA consideration)

13. solvent fire in plutonium extraction cycle = 1E-6 to 1E-4/facility-yr (C.57, with frequencies 1E+5 times lower with HEPA failure)

14. dissolver seal failure = 1E-5/facility-yr (C.57)

15. release from hot UF_6 cylinder = 0.05/facility-yr (C.57, without HEPA consideration)

16. solvent fire in hydrogen concentrator = 2E-6/facility-yr (C.59)

17. red oil explosion in fuel product concentrator = 4E-8/facility-yr (C.59)

18. explosion in fuel product denitrator = 4E-9/facility-yr (C.59)

19. hydrogen explosion in uranium reduction = 9E-6/facility-yr (C.59)

20. hydrogen explosion in fuel product denitrator fuel tank = 3E-6/facility-yr (C.59).

For **SPENT FUEL STORAGE**, estimated frequencies for 17 accident scenarios are in Tables C.31, C.32, C.61, C.93, C.97, and C.99. Data from Tables C.31, C.32, and C.61 have been combined into 14 accident scenarios whose frequencies are listed below. Note that the values taken from Table C.31 correspond to the drywell storage concept only. Tables C.93 and C.97 present frequencies for two additional scenarios—spent fuel pool fires due to seismic and cask drop initiators. Table C.99 addresses one more scenario, deriving failure frequencies for four different configurations of a spent fuel pool cooling and makeup system:

1. collision during highway transport = 2E-4/facility-yr (Table C.32, without fire, cask storage concept), 2E-5/facility-yr (C.32, without fire, drywell storage concept), 2E-6/facility-yr (C.32, with fire, cask storage), and 2E-7/facility-yr (C.32, with fire, drywell storage)

2. tornado = 6E-6/facility-yr (C.32, cask storage) and 1E-4/facility-yr (C.32, drywell storage)

3. fuel assembly drop = 0.1/facility-yr (C.32), 9E-4/facility-yr (C.61, for PWRs), and 0.006/facility-yr (C.61, for BWRs)

4. transport cask drop = 0.004/facility-yr (C.32, cask storage), 0.07/facility-yr (C.32, drywell storage), 1E-4/facility-yr (C.61, PWRs), and 2.5E-4/facility-yr (C.61, BWRs)

5. cask venting during transport = 0.002/facility-yr (C.32, cask storage) and 0.03/facility-yr (C.32, drywell storage)

6. canister drop during emplacement = 1.7E-8/facility-yr (C.31) and 1E-6/facility-yr (C.32, drywell storage)

7. canister shear during emplacement = 2E-6/facility-yr (C.32, drywell storage)

8. cask drop during emplacement = 1E-5/facility-yr (C.32, cask storage)

9. airplane crash = 4.0E-10/facility-yr (C.31, without fire), 7.4E-9/facility-yr (C.31, with fire), 6E-9/facility-yr (C.32, with fire, cask toppled, cask storage), 9E-9/facility-yr (C.32, with fire, cask storage), 2E-7/facility-yr (C.32, one fuel assembly, with fire, drywell storage), and 2E-8/facility-yr (C.32, 10 assemblies, with fire, drywell storage)

10. earthquake = 4.8E-9/facility-yr (C.31, without fuel pin failure), 4.3E-8/facility-yr (C.31, with pin failure), 4E-6/facility-yr (C.32, 24 assemblies, cask storage), 4E-8/facility-yr (C.32, 2,400 assemblies, cask storage), 8E-6/facility-yr (C.32, one assembly, drywell storage), 8E-7/facility-yr (C.32, 10 assemblies, drywell storage), and 2E-8/facility-yr (C.32, 2,400 assemblies, drywell storage)

11. transporter collision during emplacement = 1.7E-8/facility-yr (C.31, without fire) and 6.1E-7/facility-yr (C.31, with fire)

12. transporter collision during retrieval = 0.0089/facility-yr (C.31, without pin failure or fire), 0.028/facility-yr (C.31, with pin failure, without fire), 1.4E-4/facility-yr (C.31, without pin failure, with fire), and 1.4E-4/facility-yr (C.31, with pin failure and fire)

13. transporter motion with canister partially in place = 0.086/facility-yr (C.31, during emplacement), 0.0089/facility-yr (C.31, during retrieval, without pin failure), and 0.14/facility-yr (C.31, during retrieval, with pin failure)

14. canister drop during retrieval = 0.11/facility-yr (C.31).

For **HLW STORAGE**, estimated frequencies for three accident scenarios are in Table C.62 (after grouping by pairs). For **GEOLOGIC WASTE DISPOSAL**, estimated frequencies for 18 accident scenarios are in Tables C.14, C.19, and C.20. Note that Table C.20 divides earthquake-induced accidents into nine categories, which are listed below as 18a-18i. The estimates for the 18 scenarios are as follows:

1. fuel truck crash into HLW area = 2.0E-6/facility-yr (Table C.14)

2. fuel truck crash into cladding waste area = 2.0E-6/facility-yr (C.14)

3. fuel truck crash into non-HLW (NHLW) area = 2.0E-6/facility-yr (C.14)

4. airplane crash = 1.0E-7/facility-yr (C.14) and <2.0E-10/facility-yr (C.19)

5. elevator drop = 4.0E-8/facility-yr (C.14)

6. fuel assembly drop = 0.1/facility-yr (C.19) and 1.E-8/facility-yr (C.20, drop into hot cell with HVAC failure)

7. NHLW pallet drop = 0.050/facility-yr (C.14)

8. final filter failure = 0.003/facility-yr (C.14)

9. shipping cask drop = 5E-6/facility-yr (C.20, with cask breach)

10. open consolidated fuel container drop = 1E-9/facility-yr (C.20, with HVAC failure)

11. container drop in storage vault = 3E-8/facility-yr (C.20, with failure to activate filtration system)

12. nuclear test = <0.001/facility-yr (C.19)

13. loading dock fire = <1.0E-7/facility-yr (C.19, spent fuel) and <1.0E-7/facility-yr (C.19, HLW)

14. waste handling ramp fire = <1.0E-7/facility-yr (C.19)

15. emplacement drift fire = <1.0E-7/facility-yr (C.19)

16. flood = 0.01/facility-yr (C.19)

17. tornado = <9.1E-11/facility-yr (C.19)

18. earthquake = <0.0013/facility-yr (C.19)
    18a. crane fails, falling on or dropping cask in receiving area = 5E-8/facility-yr (C.20)
    18b. train falls on cask = 5E-8/facility-yr (C.20)
    18c. structural object falls on fuel in cask unloading cell = 5E-7/facility-yr (C.20)
    18d. crane fails, falling on or dropping fuel in cask unloading cell = 1E-6/facility-yr (C.20)
    18e. structural object falls on fuel in consolidation cell = 5E-7/facility-yr (C.20)
    18f. crane fails, falling on or dropping fuel in consolidation cell = 1E-6/facility-yr (C.20)
    18g. structural object falls on fuel in packaging cell = 5E-7/facility-yr (C.20)
    18h. crane fails, falling on or dropping fuel in packaging cell = 1E-6/facility-yr (C.20, with HVAC failure)
    18i. structural object falls on fuel in transfer tunnel = 5E-7/facility-yr (C.20).

For **TRANSPORTATION**, it is convenient to identify three categories based on the material being shipped: spent fuel, plutonium oxide, and HLW. For spent fuel transportation, estimated frequencies for eight accident scenarios are in Tables C.65-C.69. The estimates for the scenarios are as follows:

1. leakage of coolant from spent fuel cask during rail shipment = 3E-4/shipment (Table C.65), 6.4E-6/shipment (C.69, impact fails cask seal, fuel failure), 1.2E-6/shipment (C.69, side impact fails pressure relief valve, fuel failure), 6.4E-6/shipment (C.69, end impact fails pressure relief valve, fuel failure), and 1.2E-6/shipment (C.69, side impact fails cask seal, fuel failure)

2. release from a collision during rail shipment = 2E-8 to 9E-6/shipment (C.65), 9E-6/shipment (C.67), and 1E-4/yr (C.68, with closure errors)

3. release from a collision followed by release of fuel from the cask during rail shipment = 2E-10 to 9E-8/shipment (C.65), 2E-5/yr C.68, for 50-80 km/hr collision), 3E-4/yr (C.68, 80-100 km/hr), 8E-5/yr (C.68, with 1000°C fire for >1 hr), and 2E-5/yr (C.68, 800°C for >2 hr)

4. loss of gases from inner cavity = 9E-6/shipment (C.66, rail shipment) and 2E-5/shipment (C.66, truck)

5. loss of confinement and 50% fuel damage = 4E-7/shipment (C.66, without fire, rail), 2E-9/ shipment (C.66, with fire, rail), 2E-7/shipment (C.66, without fire, truck), 2E-9/shipment (C.66, with fire, truck), 4E-7/shipment (C.67, without fire, rail), and 3E-9/shipment (C.67, with fire, rail)

6. loss of neutron shielding during rail shipment = 2E-5/shipment (C.67)

7. fall during rail shipment = 2E-6/yr (C.68, for 25-40 m fall) and 2E-5/yr (C.69, 9-25 m)

8. fire during rail shipment = 1E-4/yr (C.68, 1000°C for >1 hr) and 2E-5/yr (C.68, 800°C for >2 hr).

For plutonium oxide transportation, estimated frequencies for six accident scenarios are in Tables C.65 (three scenarios for rail shipment) and C.66 (three scenarios for truck shipment). For HLW transportation by rail, estimated frequencies for five accident scenarios are in Tables C.66 and C.67.

Non-Fuel Cycle Facilities

For **RESEARCH, TEACHING, EXPERIMENTAL, DIAGNOSTIC, AND THERAPEUTIC FACILITIES**, Table C.1 contains an estimated overall accident frequency of 2.3E-4/facility-yr. For **MEASUREMENT, CALIBRATION, AND IRRADIATION FACILITIES**, Table C.1 contains an estimated overall accident frequency of 1.8E-4/facility-yr. For **MANUFACTURING AND DISTRIBUTION FACILITIES EMPLOYING BYPRODUCT AND SOURCE MATERIALS**, estimated frequencies for eight accident scenarios are in Table C.7, both as best estimates and 80% confidence bounds. Table C.1 also contains an overall estimate of 0.0026/facility-yr, which is noticeably less than the sum of the eight accident frequencies from Table C.7. For **SERVICE ORGANIZATIONS** (waste warehouses), estimated frequencies for six accident scenarios are in Table C.8, both as best estimates and 80% confidence bounds.

McGuire (1988) estimated the frequency of a major radioactive release for a non-reactor facility to be 1E-4/yr, assumed applicable to either fuel- or non-fuel cycle facilities (see Section C.8).

C.2.1.2 Population Doses from Accidents

Unlike accident frequencies, literature review yielded population doses from accidents only for non-reactor fuel cycle facilities. However, safety analysis reports conducted for various DOE non-fuel cycle facilities (e.g., those at the Savannah River Site) contain population doses from accidents. If available, the analyst could use these for particular facilities.

Fuel Cycle Facilities

Estimated population doses from accidents for 10 of the 13 non-reactor fuel cycle facilities listed in Section C.1 are included in this section. Estimates for mining, TRU waste storage, and shallow land waste disposal are not included. For

URANIUM MILLING, estimated population doses from three accident scenarios are in Table C.48. For **UF_6 CONVERSION**, estimated population doses from six accident scenarios are in Table C.49. For **ENRICHMENT**, estimated population doses from four accident scenarios are in Table C.50. For **FUEL FABRICATION**, estimated population doses from seven accident scenarios are in Table C.51.

For **MOX FUEL REFABRICATION**, estimated population doses from 14 accident scenarios are in Tables C.53-C.55. The estimates for these scenarios are listed below. Note that the values listed from Table C.53 are those associated with normal HEPA filtration. The corresponding estimates with HEPA filter failure are generally 1E+5 times higher, except where noted.

1. > design basis earthquake = 1E+5 person-rem (Table C.54)

2. aircraft crash = 3E+4 person-rem (C.54) and 500 person-rem (C.55)

3. hydrogen explosion in Reduction-Oxidation Reactor (ROR) = 0.031 person-rem (C.53), 5E-9 person-rem (C.54), and 1.1E-11 person-rem (C.55)

4. hydrogen explosion in sintering furnace = 2E-7 person-rem (C.54) and 4E-10 person-rem (C.55)

5. hydrogen explosion in wet scrap = 0.16 person-rem (C.53), 2E-6 person-rem (C.54), and 1.1E-11 person-rem (C.55)

6. ion-exchange resin fire = 0.0092 person-rem (C.53) and 2E-9 person-rem (C.54)

7. loaded final filter failure = 0.3 person-rem (C.54)

8. criticality = 0.38 person-rem (C.53, with dose 1100 times higher with HEPA filter failure), 5 person-rem (C.54), and 2 person-rem (C.55)

9. powder shipping container spill = 1.1E-11 person-rem (C.55)

10. exothermic reactions in powder storage = 1E-10 person-rem (C.55)

11. major facility fire = 1.6 person-rem (C.53, with dose 9E+4 times higher with HEPA failure)

12. fire in waste compaction glove box = 0.0031 person-rem (C.53)

13. glove failure = 1.3E-5 person-rem (C.53)

14. severe glove box damage = 0.061 person-rem (C.53).

For **FUEL REPROCESSING**, estimated population doses from 20 accident scenarios are in Tables C.57-C.60. The estimates for these scenarios are listed below. Note that values from Table C.59 assume HEPA filter failure, except where noted.

1. loss of fuel storage pool water = 50 person-rem (Table C.58)

2. ion-exchange resin fire and explosion = 0.36 person-rem (C.57, with normal HEPA filtration), 1800 person-rem (C.57, with failed HEPA filtration), and 0.2 person-rem (C.58)

3. criticality = 0.030 person-rem (C.57, normal HEPA), 0.035 person-rem (C.57, failed HEPA), 5 person-rem (C.58), and 2 person-rem (C.59, without HEPA filter consideration)

4. hydrogen explosion in HAF tank = 1600 person-rem (C.57, normal HEPA), 1700 person-rem (C.57, failed HEPA), 0.07 person-rem (C.58), 9E-4 person-rem (C.59), and 490 person-rem (C.60)

5. fire in low level waste = 0.1 person-rem (C.58)

6. fuel assembly drop = 0.013 person-rem (C.57, normal HEPA), 1300 person-rem (C.57, failed HEPA), 0.1 person-rem (C.58), 0.05 person-rem (C.59, without HEPA consideration), and 0.0020 person-rem (C.60)

7. explosion in HLW calciner = 4300 person-rem (C.57, normal HEPA), 1.3E+4 person-rem (C.57, failed HEPA), 6E+6 person-rem (C.58, assuming HEPA filter failure), 0.2 person-rem (C.59), and 510 person-rem (C.60)

8. krypton cylinder rupture = 50 person-rem (C.58) and 40 person-rem (C.59, without HEPA consideration)

9. explosion in HAW concentrator = 430 person-rem (C.57, normal HEPA), 9500 person-rem (C.57, failed HEPA), 0.008 person-rem (C.59), and 57 person-rem (C.60)

10. solvent fire in codecontamination cycle = 23 person-rem (C.57, normal HEPA), 56 person-rem (C.57, failed HEPA), and 2.6 person-rem (C.60)

11. explosion in LAW concentrator = 28 person-rem (C.57, normal HEPA), 48 person-rem (C.57, failed HEPA), and 3.2 person-rem (C.60)

12. explosion in iodine absorber = 4.8 person-rem (C.57, without HEPA consideration)

13. solvent fire in plutonium extraction cycle = 3.1E-4 person-rem (C.57, normal HEPA) and 520 person-rem (C.57, failed HEPA)

14. dissolver seal failure = 0.023 person-rem (C.57, normal HEPA) and 2300 person-rem (C.57, failed HEPA)

15. release from hot UF_6 cylinder = 1.5 person-rem (C.57, without HEPA consideration)

16. solvent fire in hydrogen concentrator = 7E-4 person-rem (C.59)

17. red oil explosion in fuel product concentrator = 6E-4 person-rem (C.59)

18. explosion in fuel product denitrator = 0.012 person-rem (C.59)

19. hydrogen explosion in uranium reduction = 1.4E-4 person-rem (C.59)

20. hydrogen explosion in fuel product denitrator fuel tank = 0.012 person-rem (C.59).

For **SPENT FUEL STORAGE**, estimated population doses from 18 accident scenarios are in Tables C.27, C.31, C.32, C.61, C.94, and C.101. Those from Tables C.27, C.31, C.32, and C.61 have been combined into 14 accident scenarios whose population doses are listed below. Note that the values taken from Table C.27 are those for total body population dose. The values taken from Table C.31 correspond to the drywell storage concept only. Also note that Tables C.31 and

C.32 are quantified in terms of latent cancer fatalities (LCFs) rather than person-rems. These can be transformed into person-rems via a typical conversion factor such as 200 health effects (or LCFs) per 1E+6 person-rems, or inversely 5,000 person-rem/health effect.[1] Table C.94 presents population doses for two additional scenarios—spent fuel pool fires due to seismic and cask drop initiators, whose estimated frequencies are in Table C.93—in terms of an "average" and "worst" case. Table C.101 addresses two more scenarios, another "average" and "worst" case, deriving population doses for four pairings of the accident scenarios and selected mitigative options.

1. collision during highway transport = 0.1 LCF (Table C.32, without fire, cask storage concept), 0.004 LCF (C.32, without fire, drywell storage concept), 0.5 LCF (C.32, with fire, cask storage), and 0.02 LCF (C.32, with fire, drywell storage)

2. tornado = 0.04 LCF (C.32, cask storage) and 0.04 LCF (C.32, drywell storage)

3. fuel assembly drop = 0.03 person-rem (C.27), 4E-5 LCF (C.32), 0.7 person-rem (C.61, for PWRs), and 0.3 person-rem (C.61, for BWRs)

4. transport cask drop = 0.006 person-rem (C.27), 4E-4 LCF (C.32, cask storage), 4E-4 LCF (C.32, drywell storage), 2 person-rem (C.61, PWRs), and 1.8 person-rem (C.61, BWRs)

5. cask venting during transport = 0.1 LCF (C.32, cask storage) and 0.004 LCF (C.32, drywell storage)

6. canister drop during emplacement = 3.9E-6 LCF (C.31) and 0.004 LCF (C.32, drywell storage)

7. canister shear during emplacement = 0.004 LCF (C.32, drywell storage)

8. cask drop during emplacement = 0.006 person-rem (C.27) and 0.004 LCF (C.32, cask storage)

9. airplane crash = 0.26 LCF (C.31, without fire), 1.3 LCF (C.31, with fire), 0.5 LCF (C.32, with fire, cask toppled, cask storage), 0.5 LCF (C.32, with fire, cask storage), 0.02 LCF (C.32, one fuel assembly, with fire, drywell storage), and 0.2 LCF (C.32, 10 assemblies, with fire, drywell storage)

10. earthquake = 0.061 LCF (C.31, without fuel pin failure), 3.3 LCF (C.31, with pin failure), 0.1 LCF (C.32, 24 assemblies, cask storage), 10 LCF (C.32, 2400 assemblies, cask storage), 0.004 LCF (C.32, one assembly, drywell storage), 0.04 LCF (C.32, 10 assemblies, drywell storage), and 2.4 LCF (C.32, 2400 assemblies, drywell storage)

11. transporter collision during emplacement = 3.4E-5 LCF (C.31, without fire) and 0.0019 LCF (C.31, with fire)

12. transporter collision during retrieval = 5.9E-7 LCF (C.31, without pin failure or fire), 3.8E-5 LCF (C.31, with pin failure, without fire), 2.6E-6 LCF (C.31, without pin failure, with fire), and 2.6E-4 LCF (C.31, with pin failure and fire)

13. transporter motion with canister partially in place = 0.018 LCF (C.31, during emplacement), 5.9E-7 LCF (C.31, during retrieval, without pin failure), and 0.0016 LCF (C.31, during retrieval, with pin failure)

14. canister drop during retrieval = 9.9E-7 LCF (C.31).

For **HLW STORAGE**, estimated population doses from three accident scenarios (after grouping by pairs) are in Table C.62. For **GEOLOGIC WASTE DISPOSAL**, estimated population doses from 19 accident scenarios are in

Tables C.14, C.15, C.18, and C.19. Note that Table C.15 reports population doses as person-mrems. These are listed as person-rems below. Also note that Tables C.18 and C.19 generally provide the same values (and are referenced as coming from Table C.19), except where noted.

1. fuel truck crash into HLW area = 2000 person-rem (Table C.14)
2. fuel truck crash into cladding waste area = 2.0 person-rem (C.14)
3. fuel truck crash into NHLW area = 40 person-rem (C.14)
4. airplane crash = 4000 person-rem (C.14) and 110 person-rem (C.19)
5. elevator drop = 0.050 person-rem (C.14)
6. fuel assembly drop = 2.99 person-rem (C.15) and 8.0E-5 person-rem (C.19)
7. NHLW pallet drop = 0.80 person-rem (C.14)
8. final filter failure = 2.0 person-rem (C.14)
9. HLW drop = 0.175 person-rem (C.15)
10. spent fuel handling = 1.29 person-rem (C.15)
11. remote TRU drop = 1.98E-4 person-rem (C.15)
12. contract TRU puncture = 6.70E-8 person-rem (C.15)
13. nuclear test = 0.0031 person-rem (C.19)
14. loading dock fire = 0.0068 person-rem (C.19, spent fuel) and 9.2E-4 person-rem (C.19, HLW)
15. waste handling ramp fire = 3.6E-7 person-rem (C.18) and 4.8E-7 person-rem (C.19)
16. emplacement drift fire = 3.6E-7 person-rem (C.18) and 4.8E-7 person-rem (C.19)
17. flood = 1.2E-9 person-rem (C.19)
18. tornado = 0.0031 person-rem (C.19)
19. earthquake = 0.0031 person-rem (C.19).

For **TRANSPORTATION**, it is convenient to identify three categories based on the material being shipped: spent fuel, plutonium oxide, and HLW. For spent fuel transportation, estimated population doses from eight accident scenarios are in Tables C.37, C.38, and C.65-C.69. The estimates for these scenarios are listed below. Note that the values reported from Table C.37 are the totals from inhalation, plume gamma, and ground gamma pathways. The values listed below correspond to those for the urban area given in Table C.37. The corresponding values for the rural area in Table C.37 are 640 times lower. Also note that Table C.38 reports population doses from the water ingestion pathway.

1. leakage of coolant from spent fuel cask during rail shipment = 5.8E-4 person-rem (Table C.65), 680 person-rem (C.69, impact fails cask seal, fuel failure), 1900 person-rem (C.69, side impact fails pressure relief valve, fuel failure), 1900 person-rem (C.69, end impact fails pressure relief valve, fuel failure), and 680 person-rem (C.69, side impact fails cask seal, fuel failure)

2. release from a collision during rail shipment = 939 person-rem (C.37), 182 person-rem (C.38), 1.9E+4 person-rem (C.65), 1.7E-6 person-rem (C.67), and 1.1 person-rem (C.68, with closure errors)

3. release from a collision followed by release of fuel from the cask during rail shipment = 1.35E+4 person-rem (C.37, with fire), 1.12E+5 person-rem (C.37, with fire and fuel oxidation), 6870 person-rem (C.38, fire), 6.3E+4 person-rem (C.38, fire and oxidation), 2.7E+4 person-rem (C.65), 0.28 person-rem (C.68, for 50-80 km/hr collision), 0.28 person-rem (C.68, 80-100 km/hr), 0.20 person-rem (C.68, with 1000°C fire for > 1 hr), and 0.20 person-rem (C.68, 800°C for > 2 hr)

4. loss of gases from inner cavity = 1E-6 person-rem (C.66, rail shipment) and 5E-9 person-rem (C.66, truck)

5. loss of confinement and 50% fuel damage = 0.1 person-rem (C.66, without fire, rail), 2000 person-rem (C.66, with fire, rail), 100 person-rem (C.66, without fire, truck), 600 person-rem (C.66, with fire, truck), 0.5 person-rem (C.67, without fire, rail), and 1700 person-rem (C.67, with fire, rail)

6. loss of neutron shielding during rail shipment = 8E-7 person-rem (C.67)

7. fall during rail shipment = 0.28 person-rem (C.68, for 25 to 40 m fall) and 0.28 person-rem (C.69, 9-25 m)

8. fire during rail shipment = 0.20 person-rem (C.68, 1000°C for > 1 hr) and 0.20 person-rem (C.68, 800°C for > 2 hr).

For plutonium oxide transportation, estimated population doses from six accident scenarios are in Tables C.65 (three scenarios for rail shipment) and C.66 (three scenarios for truck shipment). For HLW transportation by rail, estimated population doses from five accident scenarios are in Tables C.66 and C.67.

McGuire (1988) estimated the population doses from a major radioactive release for a non-reactor facility to be 40 and 800 person-rem for an effective dose equivalent (EDE) of 5 rems at distances of 100 and 1,000 m, respectively. These can be assumed applicable to either fuel- or non-fuel cycle facilities (see Section C.8).

C.2.1.3 Total Accident Risks

Total public risks from all accident scenarios have been estimated for 10 of the 13 non-reactor fuel cycle facilities listed in Section C.1. Many of these estimated risks are in Table C.70 after scaling on a consistent basis for comparison (see Section C.6). Tables C.14, C.19, C.31, C.32, C.35, C.42, and C.44 contain additional estimates. The estimates in these eight tables have been assembled into the following table, modeled after Table C.70. The risks from Tables C.14, C.19, C.31, C.32, C.35, C.42, and C.44 are listed as "unscaled" values, after converting units of health effects or fatalities into person-rems via a conversion factor of 5,000 person-rem/health effect.[2] The "normalized" risks from Table C.70 are listed as "scaled" values in Table C.109.

Estimated public risks from three accident scenarios during the postclosure period of **GEOLOGIC WASTE DISPOSAL** in terms of 10,000-yr health effects for four geologic media are in Table C.23. These can be summed to yield the following total public risks:

- basalt = 28.43 health effects
- bedded salt = 6.57 health effects
- tuff = 3.44 health effects
- granite = 9.85 health effects.

These can be converted into person-rems as mentioned above.

C.2.2 Public Health (Routine)

There is considerably less literature on routine public health risks than on accidental risks for non-reactor applications.

For **SPENT FUEL STORAGE**, estimated routine public risks during the operations and decommissioning phases at a monitored retrievable storage (MRS) facility are in Table C.44 in terms of latent health effects (LHEs) per year. These can be transformed into person-rem/yr via a typical conversion factor such as 5,000 person-rem/health effect.[2] Table C.26 also provides the routine public risk during operations at an MRS facility, 20 person-rem/yr (total body).

For **GEOLOGIC WASTE DISPOSAL**, estimated routine public risks during the construction, operations, and decommissioning phases of the preclosure period at a repository are in Tables C.9, C.10, C.13, C.42, and C.44. Note that the values in Tables C.9 and C.10 are given in terms of the 70- and 50-year dose commitments, respectively. The value from Table C.13 is taken for the "reference" case. Also note that the values in Tables C.42 and C.44 are given in terms of LHE/yr, which can be converted into person-rem/yr as discussed above. Tables C.42 and C.44 address the waste management system without and with an MRS facility, respectively. The routine public risks have been estimated as follows:

1. construction = 0.0068 person-rem (Table C.9, salt medium), 100 person-rem (C.9, granite), 15 person-rem (C.9, basalt), 38 person-rem (C.9, shale), 2.0E+4 person-rem (C.10), 1E-5 LHE/yr (C.42), and 1E-5 LHE/yr (C.44)

2. operations = 3.9E+5 person-rem (C.10), 1.5E-5 person-rem/yr (C.13), 9E-4 LHE/yr (C.42), and 8E-7 LHE/yr (C.44)

3. decommissioning = 2E-11 LHE/yr (C.42) and 2E-11 LHE/yr (C.44).

For the postclosure period of geologic waste disposal, estimated routine public risks are in Tables C.23 and C.24. Table C.23 provides the 10,000-yr health effects for an undisturbed repository in four geologic media. Table C.24 provides 27,000- and 250,000-yr population doses to four body organs resulting from ingestion of drinking water.

For **TRANSPORTATION**, estimated routine public risks are in Tables C.35, C.40-C.42, and C.44. The values in Table C.35 apply exclusively to spent fuel shipment. Tables C.40 and C.41 present values for both spent fuel and HLW shipment by truck and rail to three repository locations for the waste management system without and with an MRS facility, respectively. The risks are given in health effects, which can be converted into person-rems as previously discussed. The values in Tables C.42 and C.44 apply to both spent fuel and HLW shipment, assuming that 30% of the spent fuel is shipped by truck and 70% by rail, while all HLW is shipped by rail. Note that the values in Tables C.42 and C.44 are given in terms of LHE/yr. These can be transformed into person-rem/yr via a typical conversion factor such as 5,000 person-rem/health effect.[2] Tables C.42 and C.44 address the waste management system without and with an MRS facility, respectively. The routine public risks have been estimated as follows:

- spent fuel by truck = 93.80 person-rem/yr (C.35, in 1975) and 565.0 person-rem/yr (C.35, 1985)
- spent fuel by rail = 7.78 person-rem/yr (C.35, 1975) and 298.0 person-rem/yr (C.35, 1985)

- spent fuel and HLW combined = 0.09 LHE/yr (C.42) and 0.03 LHE/yr (C.44).

C.2.3 Occupational Health (Accident)

There is less literature available on occupational compared to public health risks due to accidents. Information is particularly scarce for non-fuel cycle facilities. Information for fuel cycle facilities is discussed below.

Estimated risks to the worker from accidents are shown below for four of the 13 non-reactor fuel cycle facilities listed in Section C.1: MOX fuel refabrication, fuel reprocessing, spent fuel storage, and geologic waste disposal (Fullwood and Jackson 1980).

MOX FUEL REFABRICATION = 7.0E-4 person-rem/GWe-yr

FUEL REPROCESSING = 1.0E-4 person-rem/GWe-yr.

For **SPENT FUEL STORAGE**, estimated occupational risks due to accidents during the operations and decommissioning phases at an MRS facility are in Table C.45. The values are in terms of LHE/yr, which can be transformed into person-rem/yr via a typical conversion factor such as 5,000 person-rem/health effect.[2]

For **GEOLOGIC WASTE DISPOSAL**, occupational risks due to accidents have been estimated for aggregates of scenarios during the operations, decommissioning, and retrieval phases in the preclosure period. The estimates are in Tables C.21 (decommissioning and retrieval), C.43 (operations, without an MRS facility), and C.45 (operations, with an MRS facility). The latter two tables provide values in terms of LHE/yr, which can be transformed into person-rem/yr as mentioned above. Table C.12 presents an occupational risk estimate for a shaft drop accident during the operations phase. The information in Tables C.18 and C.19 provide both frequencies and worker doses for individual accident scenarios during the operations phase of the preclosure period. These can be converted into occupational risk estimates in a manner similar to that employed in Table C.19 for public risk, as shown in Table C.110.

C.2.4 Occupational Health (Routine)

There is limited literature available on routine occupational health risks. Information for non-fuel cycle facilities is particularly scarce. Information for non-reactor fuel cycle facilities is discussed below.

Estimated risks to the worker from routine operations are included below for four of the 13 non-reactor fuel cycle facilities listed in Section C.1: fuel fabrication, spent fuel storage, geologic waste disposal, and transportation. For **FUEL FABRICATION**, estimated occupational doses for fabricating PuO_2 powder into unfired pellets and reconstituting the pellets back to powder are in Tables C.75 and C.76, respectively. Average values and ranges are provided.

For **SPENT FUEL STORAGE**, Table C.45 provides the total routine estimated occupational risks (in LHE/yr) for the operations and decommissioning phases at an MRS facility. These can be transformed into person-rem/yr via a typical conversion factor such as 5,000 person-rem/health effect.[2] Daling et al. (1990) provide estimates for the decommissioning phase at an MRS facility of 120 person-rem for drywell storage and 128 person-rem for cask storage (see Section C.5). Totals for the operations phase at an MRS facility are also provided in Tables C.28 and C.29, and can be calculated from Table C.30. Tables C.28-C.30 also list the routine occupational risks for separate activities during the operations phase. Note that Table C.28 gives these in terms of person-rem/1,000 metric tons of uranium (MTU); C.29 lists them in person-rem/yr; and C.30 lists them in person-mrem/1,000 MTU (converted to person-rem/1,000 MTU below). The composites for the seven activities from Tables C.28-C.30 are as follows:

1. receipt, inspection, and unloading = 58 person-rem/1,000 MTU (Table C.28), 148.0 person-rem/yr (C.29), 0.135 person-rem/1,000 MTU (C.30, from truck), and 0.025 person-rem/1,000 MTU (C.30, rail)

2. consolidation and packaging = 15 person-rem/1,000 MTU (C.28), 6.2 person-rem/yr (C.29), 0.0036 person-rem/1,000 MTU (C.30, for fuel), and 0.0011 person-rem/1,000 MTU (C.30, non-fuel)

3. emplacement in storage area = 20 person-rem/1,000 MTU (C.28, including retrieval from storage area) and 7.2 person-rem/yr (C.29)

4. maintenance/monitoring in storage area = 2 person-rem/1,000 MTU (C.28) and 5.3 person-rem/yr (C.29)

5. retrieval from storage area = 20 person-rem/1,000 MTU (C.28, including emplacement) and 7.1 person-rem/yr (C.29)

6. transfer to process cells = 4.0 person-rem/yr (C.29)

7. shipment to repository = 140.9 person-rem/yr (C.29).

For **GEOLOGIC WASTE DISPOSAL**, total estimated routine occupational risks for the construction, operations, decommissioning, and retrieval phases of the preclosure period are in Tables C.9, C.11, C.12, C.16, C.17, C.21, C.43, and C.45. The estimates from Table C.9 are in terms of the 70-yr dose commitment; Table C.11 reports fatalities over 5-yr construction and 26-yr operations phases; Tables C.43 and C.45 give values in terms of LHE/yr for the waste management system without and with an MRS facility, respectively. Both fatalities and LHE/yr can be transformed into person-rem/yr via a typical conversion factor such as 5,000 person-rem/health effect.[2] The values from Tables C.12 and C.21 are taken for the "reference" case. The routine occupational risks have been estimated as follows:

1. construction = 0.18 person-rem (Table C.9, salt medium), 5,000 person-rem (C.9, granite), 6,200 person-rem (C.9, basalt), 1,900 person-rem (C.9, shale), 0.014 fatality (C.11, salt), 0.77 fatality (C.11, tuff), 1.6 fatalities (C.11, basalt), 0.1 LHE/yr (C.43), and 0.1 LHE/yr (C.45)

2. operations = 1.5 fatalities (C.11, salt), 5.0 fatalities (C.11, tuff), 7.3 fatalities (C.11, basalt), 902 person-rem/yr (C.12), 0.02 LHE/yr (C.43), and 0.02 LHE/yr (C.45)

3. decommissioning = 6 person-rem/yr (C.21), 0.03 LHE/yr (C.43), and 0.03 LHE/yr (C.45)

4. retrieval = 163 person-rem/yr (C.21).

Table C.17 lists the routine occupational risks for separate activities during the operations phase at a tuff repository. Table C.16 does likewise for four of the activities listed in Table C.17. The estimates from Table C.16 are as follows:

1. receiving = 44.8 person-rem/yr

2. handling and packaging = 6.9 person-rem/yr

3. transfer to underground facilities = 6.0 person-rem/yr

4. emplacement in boreholes = 12.4 person-rem/yr for vertical emplacement and 8.7 person-rem/yr for horizontal.

These values agree well with the corresponding ones in Table C.17.

For **TRANSPORTATION**, Tables C.43 and C.45 contain estimated routine occupational risks for the waste management system without and with an MRS facility, respectively. These values are given in LHE/yr which can be converted into person-rem/yr as mentioned above.

C.2.5 Offsite and Onsite Property

The offsite and onsite property attributes are examined together in this section for non-reactor facilities because most of the estimates reported in the literature have grouped the associated costs together as cleanup costs. When such costs are multiplied by the accident frequencies, measures of economic risk from accidents are obtained. Several of the reviewed reports contain economic risk estimates from accidents.

C.2.5.1 Fuel Cycle Facilities

Information is included below on estimated cleanup costs and/or economic risks have been estimated for five of the 13 non-reactor fuel cycle facilities listed in Section C.1: uranium milling, UF_6 conversion, fuel fabrication, spent fuel storage, and transportation. Estimates for **URANIUM MILLING, UF_6 CONVERSION, and FUEL FABRICATION** are provided in Tables C.4-C.6, respectively. Each table provides a best estimate and 80% confidence bounds for the cleanup cost (in 1989 dollars) associated with each accident scenario at the reference facility. Each cost is multiplied by the corresponding estimate for the scenario frequency (also given as a best estimate and 80% confidence bounds) to yield the best estimate and 80% confidence bounds for the economic risk associated with each scenario. These scenario risks are then summed to give the best estimate and 80% confidence bounds for the total economic risk from accidents at the reference facility.

For **SPENT FUEL STORAGE**, Table C.94 contains estimates of the offsite property damage in 1983 dollars for two accident scenarios: spent fuel pool fires due to seismic and cask drop initiators. Frequency estimated are in Table C.93—in terms of an "average" and "worst" case. Table C.95 contains estimates of the onsite property damage in 1983 dollars corresponding to these same two scenarios. Table C.101 contains estimates of offsite property damage in 1983 dollars for four pairings of accident scenarios and selected mitigative options. For **TRANSPORTATION** of spent fuel by rail, ranges of estimated cleanup costs for three accident scenarios in 1984 dollars are in Daling et al. (1990) (see Section C.5).

C.2.5.2 Non-Fuel Cycle Facilities

Estimated cleanup costs (presumably in 1986 dollars) which can be associated with the **FOUR NON-REACTOR NON-FUEL CYCLE FACILITIES** listed in Section C.1 are in Figure C.1 and Table C.2. They are expressed as functions of the licensed material quantity for both an "average" and "worst-case" release (see Section C.3). For all but the service organizations, the average costs are multiplied by the accident frequencies for the corresponding facilities estimated in Table C.1 to yield economic risk as a function of licensed material quantity for each of the remaining three facilities in Table C.3.

Tables C.7 and C.8 contain best estimates and 80% confidence bounds for the cleanup cost (in 1989 dollars) associated with each accident scenario at a **REFERENCE MANUFACTURING AND DISTRIBUTION FACILITY EMPLOYING BYPRODUCT AND SOURCE MATERIALS** and **SERVICE ORGANIZATIONS** (waste warehouses). Each cost is multiplied by the corresponding estimate for the scenario frequency (also given as a best estimate and 80% confidence

bounds) to yield the best estimate and 80% confidence bounds for the economic risk associated with each scenario. These scenario risks are then summed to give the best estimate and 80% confidence bounds for the total economic risk from accidents.

C.3 A Preliminary Evaluation of the Economic Risk for Cleanup of Nuclear Material Licensee Contamination Incidents (NUREG/CR-4825)

In NUREG/CR-4825 (Ostmeyer and Skinner 1987) and a subsequent document (NUREG/CR-5381 [Philbin et al. 1990], see Section C.4), the economic risk of cleanup costs resulting from non-reactor NRC licensee contamination incidents was evaluated. This first study focused only on incidents where the cleanup cost was < $2E+6. Owing to the preliminary nature of this study, little information was assembled on the frequencies, severities, and costs associated with the contamination incidents. The analysis objective was to provide a technical basis upon which to develop a financial coverage schedule for a rulemaking which would require certain nuclear material licensees to demonstrate adequate financial coverage for contamination cleanup. The analysis sought to provide three products:

1. a rational method to classify licensees according to the potential magnitude and frequency of contamination incidents
2. a model to rank the classes of licensees according to potential incident costs
3. estimates of the economic risk for licensees in each class.

Three indices were proposed to classify the licensees:

1. application/use of the licensed material
2. the licensed curie (Ci) activity
3. the nuclear material form.

Each class was further divided as follows:

- Class 1

  I. research, teaching, experimental, diagnostic, and therapeutic facilities, including hospitals, universities, medical groups, and physicians
  II. measurement, calibration, and irradiation facilities, including users of sealed sources
  III. manufacturing and distribution facilities employing byproduct and source materials, such as radiopharmaceuticals
  IV. service organizations, including waste repackagers, processors, and disposers
  V. non-reactor fuel cycle facilities, handling source and special nuclear material facilities, such as uranium or thorium ore processors.

- Class 2

  This class was subdivided into seven categories ranging from facilities licensed to handle quantities $\leq$ 0.01 Ci to ones licensed to handle > 1,000 Ci, with each subclass spanning a factor of 10 in licensed Ci quantity.

- Class 3

  I. licensees handling sealed sources
  II. licensees handling non-encapsulated Group A sources (i.e., sources whose potential release fraction is < 0.1)
  III. licensees handling non-encapsulated Group B sources (i.e., sources whose potential release fraction is ≥ 0.1.).

Frequencies of contamination incidents were determined for the Class-1 licensees using historic data from the NRC's Non-Reactor Event Report (NRER) database (spanning 1980-1986 at the time of the study). These frequencies are tabulated in Table C.1. Costs were developed from 19 historic events and order-of-magnitude estimates for selected groups of licensee incidents. They have been plotted as a function of licensed Ci quantity in Figure C.1 for two cases:

1. a "worst" case, where 100% of the licensed quantity was assumed to be released

2. an "average" case, where only 15% of the licensed quantity was assumed to be released.

Cleanup costs were assigned to five of the seven divisions of Class-2 licensees at the geometric midpoints of each division's range from Figure C.1. These are listed in Table C.2 for both the worst (licensed quantity released [LQR]) and average cases.

The economic risk was defined as the product of the incident frequency (according to Index Class 1) and the cleanup cost (according to Index Class 2). Using the incident frequencies from Table C.1 and the average cleanup costs from Table C.2, the economic risk per Class-1/Class-2 licensee is tabulated in Table C.3. Division IV from Class 1 was excluded due to the lack of available data for frequency estimation. Division V from Class 1 was excluded because the incidents required cleanup costs $\geq$ \$2E+6, which fell outside the study scope.

Also provided in NUREG/CR-4825 were the following:

- a tabulation of the contamination incidents from the NRER database (1980-1986) and the NRC's OMIT and Fuel Cycle databases (pre-1980), in NUREG/CR-4825 Appendix B

- a tabulation of the historic cost data for cleanup, in NUREG/CR-4825 Appendix C

- the development of a simple cost model which estimates cleanup cost from contaminated floor space, in NUREG/CR-4825 Appendix D.

C.4 Economic Risk of Contamination Cleanup Costs Resulting from Large Non-Reactor Nuclear Material Licensee Operations (NUREG/CR-5381)

In NUREG/CR-5381 (Philbin et al. 1990) and (NUREG/CR-4825 [Ostmeyer and Skinner 1987], see Section C.3), the economic risk of cleanup costs resulting from non-reactor NRC licensee contamination incidents was evaluated. This latter study focused only on incidents at large non-reactor licensees where the cleanup cost was $\geq$ \$2E+6. Five categories of non-reactor licensees were identified, with a reference facility chosen for each:

1. uranium mines and mills, represented by the White Mesa Mill in Blanding, Utah, as described in NUREG/CR-5381 Appendix A

2. uranium hexafluoride (UF_6) conversion plants, represented by the Sequoyah Plant in Gore, Oklahoma, as described in NUREG/CR-5381 Appendix B

3. uranium fuel fabrication facilities, represented by the Westinghouse Facility in Columbia, South Carolina, as described in NUREG/CR-5381 Appendix C

4. large manufacturers and/or distributors of nuclear byproducts, represented by the DuPont Facility in North Billerica, Massachusetts, as described in NUREG/CR-5381 Appendix D

5. nuclear waste warehouses, represented by ADCO Services in Tinley Park, Illinois, as described in NUREG/CR-5381 Appendix E.

The approach taken in NUREG/CR-5381 consisted of the following steps:

- describe each reference facility, postulating accident scenarios for each process in terms of the radioactive material releases, incident frequencies, decontamination efforts required, and decontamination costs for property cleanup and waste disposal

- define incidents from historic data and systems analysis, covering the risk-dominant ones (i.e., the range from high frequency-low consequence events to those with low frequencies but high consequences; decontamination models were employed for the latter pair when historic data were unavailable)

- calculate the economic risk in 1989 dollars as the sum of the products of frequency and cost for each incident, including uncertainty analysis. In essence, the economic risk is the expected cost to decontaminate the property in the event of a radioactive release at the facility.

Where available, historic data for actual or similar facilities were used to estimate the incident frequencies and cleanup costs. In lieu of these, historic data from related industries were employed. Mathematical models were developed to estimate frequencies and costs where no historic data were available. For each point estimate, upper and lower bounds were specified for an 80% confidence interval. These were propagated to yield 80% confidence bounds on both the individual scenario economic risk and the total economic risk for the sum of all the scenarios for a facility.

Tables C.4-C.8 list the incident scenarios, consequence descriptions, cleanup costs, annual frequencies, and annual economic risks for each of the reference facilities. The uncertainty bounds are included for the latter three parameters. As part of the reference facility descriptions, the radioactive inventories and curies released per accident are tabulated in Appendices A-E of NUREG/CR-5381. The contamination incidents for all five licensee classes based on NRC's NRER, OMIT, and Fuel Cycle databases are listed in Appendix F to NUREG/CR-5381. The NRER database included incidents from 1980 onward, while the others included only pre-1980 incidents. The OMIT database focused on non-fuel cycle activities, while the Fuel Cycle database addressed non-reactor fuel cycle operations. Note that neither Table C.5 nor Table C.6 includes a major UF_6 release that occurred at the Sequoyah nuclear power plant. Only accidents at uranium hexafluoride conversion plants and fuel fabrication facilities were considered in the development of Tables C.5 and C.6.

C.5 Preliminary Characterization of Risks in the Nuclear Waste Management System Based on Information in the Literature (PNL-6099)

In PNL-6099, Daling et al. (1990) surveyed literature on the following three components of the nuclear waste management system to develop a preliminary characterization of the associated risks:

- the waste repository (in tuff, salt, and basalt media)
- the MRS facility
- the transportation system supporting both of these.

Five risk categories were defined, of which only those associated with radiological exposure are of interest in this appendix:

1. public and occupational risks from radiological release accidents
2. public and occupational risks from radiological exposure during routine operations
3. economic risks resulting from radiological release accidents.

For the repository, both the preclosure (construction, operations, decommissioning, and retrieval phases) and postclosure periods were addressed. For the MRS facility, the construction, operations, and decommissioning phases were examined. For the transportation system, only operations were considered. Construction and decommissioning of transport equipment were not addressed.

For each component of the waste management system, descriptions for reference facilities and processes were developed, primarily based on conceptual designs (see Chapter 3 of PNL-6099). These were used to form composite risk estimates from all the reviews on a consistent basis by scaling to the reference facilities. Daling et al. (1990) first presented relevant data taken from the reviewed documents prior to their combination into composite risk estimates. Finally, these composites, as scaled for the reference facilities, were provided.

The repository preclosure period has been fairly well examined with respect to risk estimation. Tables C.9-C.11 list exposures for the construction phase. The operations phase has been addressed extensively, as indicated by the data presented in Tables C.12-C.20. Limited information was available on the latter two phases of the preclosure period (decommissioning and retrieval). Table C.21 summarizes this information. Data for the repository preclosure period on a normalized basis is compared in Table C.22.

The repository postclosure period also has been examined quite well, although the estimates are usually very uncertain due to the extremely long time scale considered. Table C.23 lists the health effects associated with four accident scenarios for a waste repository in four different geologic media. Table C.24 lists accumulated doses by body organ for a repository in a tuff medium. Conditional cancer risks from ingestion for six different accident scenarios are given in Table C.25.

For the MRS facility, no radiological risks exist during the construction phase. Radiological risks arise during the operations phase. Tables C.26 and C.27 provide 50-year dose commitments during the operations phase under routine and accident conditions, respectively. For the three accident scenarios listed in Table C.27, the following frequencies were assumed: 1) fuel assembly drop - reasonable chance of occurring annually; 2) shipping cask drop - reasonable chance of occurring once during the facility lifetime; and 3) storage cask drop - unlikely to occur, but requiring consideration.

Occupational doses for standard activities during the operations phase are tabulated in Tables C.28-C.30. For drywell storage in the MRS facility, operations phase risks from selected accident scenarios are shown in Table C.31. Operations phase risks due to accidents for both drywell and cask storage concepts are listed in Table C.32. The following radiological risks to the worker from routine operations during the decommissioning phase were estimated: 120 person-rem for drywell storage and 128 person-rem for cask storage.

The radiological risks from transportation have been examined extensively. Dose rates and total doses under normal (non-accident) shipping conditions for spent fuel transport by truck and rail cask are listed in Tables C.33 and C.34. Note that both tables were based on a shipping cask modeled as an infinite line source. Thus, the doses reported are reasonable from 3 m to 15 m but probable overestimates beyond 40 m away. Radiological risks are given in Table C.35. Dose estimates from selected accidents during rail shipment of spent fuel are provided in Tables C.36-C.38. Transportation risks under both normal and accident conditions have been combined for truck and rail shipments of spent fuel in Table C.39. The risks encountered during routine transportation (i.e., non-accident) for a waste management system without and with an MRS facility are listed in Tables C.40 and C.41, respectively, for both spent fuel and HLW shipment. A range of cleanup costs (1984 dollars) were estimated for three accident classes for spent fuel transportation by rail: 1) impact = \$2.0E+5 - \$9.5E+6; 2) impact with burst = \$1.4E+6 - \$7.0E+7; and 3) impact with burst and oxidation = \$1.3E+7 - \$6.2E+8.

The radiological risks from all three components of the waste management system were converted into composite estimates for the reference facilities assuming a throughput of 3,000 MTU/yr, a maximum repository capacity of 70,000 MTU, and a conversion factor of 2.0E-4 LHE per person-rem.[1] Public and occupational risks from the preclosure period of the waste management system without an MRS facility are tabulated in Tables C.42 and C.43, respectively. The corresponding risks for the system with an MRS facility are provided in Tables C.44 and C.45, respectively. Total risks for the preclosure period are given in Table C.46. Table C.47 summarizes the annual and total life-cycle risks for the entire waste management system.

C.6 Preliminary Ranking of Nuclear Fuel Cycle Facilities on the Basis of Radiological Risks from Accidents

In an unpublished PNNL study, Pelto et al. examined the risk to the public and plant worker from radiological accidents at non-reactor nuclear fuel cycle facilities. The study was essentially a literature survey, similar to that of PNL-6099 (Daling et al. 1990 [see Section C.5]), but focusing on all non-reactor fuel cycle facilities, rather than just those associated with nuclear waste management. The 13 categories of non-reactor fuel cycle facilities listed in Section C.1.1 were identified.

Representative non-reactor fuel cycle facilities were selected for each of the 13 categories based on actual facilities or conceptual designs provided by Schneider et al. (1982). These representative descriptions, including site characteristics, were combined with the ALLDOS computer code (Strenge et al. 1980) to scale the consequences of radioactive release on a consistent basis. Radiological risk was measured in whole body person-rem/GWe-year (i.e., in terms of the annual requirements of a 1,000-MWe [1-GWe] LWR) as the 50-year population dose commitments for selected organs, based only on the airborne pathway. Although the source documents reviewed by Pelto et al. were dated prior to 1983, they are felt to provide at least conservative results. Any subsequent refinements to the facilities would have tended to reduce risks based on "lessons learned."

Fullwood and Jackson (1980) estimated the radiological risk to the plant worker, citing the following pair of values: 1) 7.0E-4 person-rem/GWe-year for MOX fuel refabrication, and 2) 1.0E-4 person-rem/GWe-year for fuel reprocessing. The remaining literature addressed public risk as discussed below.

Cohen and Dance (1975) performed a risk analysis for uranium milling, yielding an expected population dose (public risk) of about 0.001 person-rem/GWe-year mainly due to the release of mill tailings slurry. Three accident scenarios were identified, and their frequencies and population doses were estimated as tabulated in Table C.48. Cohen and Dance also performed a risk analysis for the conversion phase of the fuel cycle, obtaining an expected population dose ranging from 7.6E-4 to 0.0056 person-rem/GWe-year mainly due to a hydrogen explosion during the reduction step. Six accident scenarios were identified, and their frequencies and population doses were estimated as provided in Table C.49.

Cohen and Dance (1975) also give risk estimates for enrichment and fuel fabrication. For enrichment, the expected population dose ranged from 0.0025 to 0.0037 person-rem/GWe-year, dominated by release from a hot UF_6 (uranium hexafluoride) cylinder. The frequencies and population doses from the four accident scenarios considered for this phase of the fuel cycle are tabulated in Table C.50. For fuel fabrication, the expected population dose ranged widely from 4.8E-5 to 0.010 person-rem/GWe-year, again dominated by release from a hot UF_6 cylinder. Seven accident scenarios were identified and quantified as shown in Table C.51.

Cohen and Dance (1975), Erdmann et al. (1979), and Fullwood and Jackson (1980) addressed the public risk associated with MOX fuel refabrication. The ranges of expected population dose are listed along with the dominant risk contributors in Table C.52. Tables C.53-C.55 present the seven or eight accident scenarios considered for this phase of the fuel cycle, along with the associated frequencies and population doses. The relatively low risk and population doses estimated by Fullwood and Jackson (1980) indicated that results were sensitive to modeling assumptions. The same set of studies also examined the public risk associated with the fuel reprocessing phase of the fuel cycle, yielding the ranges of expected population dose and dominant risk contributors given in Table C.56. Eight to 12 accident scenarios were identified and quantified for this phase; these are listed and quantified in Tables C.57-C.59. Six accident scenarios from a study by Cooperstein et al. are presented in Table C.60, although a public risk estimate was not generated in the report.

Karn-Bransle-Sakerhat (1977), the DOE (1979), and Erdmann et al. (1979) addressed the spent fuel storage phase of the nuclear fuel cycle, estimating expected population doses ranging from 1.7E-6 to 8.9E-5 person-rem/GWe-year, dominated by either a fuel basket or fuel assembly drop accident. The frequency and population dose for the fuel assembly drop accident in Erdmann et al. (1979) were taken from their analysis for the fuel reprocessing phase (see Table C.58). Karn-Bransle-Sakerhat (1977) identified and quantified fuel transfer basket and fuel assembly drop accidents, as indicated in Table C.61. The public risk from HLW storage accidents was examined by Smith and Kastenberg (1976), who reported an expected population dose of 2.3E-4 person-rem/GWe-year mainly due to a major rupture of a waste canister combined with the independent failure of one HEPA filter. Six accident scenarios were identified, and their frequencies and population doses were estimated as tabulated in Table C.62.

Geologic waste disposal has been the subject of several risk studies. Two of the studies, DOE (1979) and Erdmann et al. (1979), were reviewed by Pelto et al. The expected population doses varied widely between these two studies for the preclosure period of geologic disposal, as indicated in Table C.63. The Analytic Sciences Corporation (TASC 1979) reviewed the peak individual dose (rem/year) to the critical organ during the postclosure period as determined from other studies. Figure C.2 summarizes these results. Erdmann et al. (1979) estimated an expected population dose of 5.0E-11 person-rem/GWe-year for the postclosure period.

Risks associated with the transportation phase of the nuclear fuel cycle have been investigated by Cohen and Dance (1975), Erdmann et al. (1979), Fullwood and Jackson (1980), the DOE (1979), the NRC (1975a, 1975b, 1976, 1977), Berman et al. (1978), the U.S. Atomic Energy Commission (AEC 1972), and Hodge and Jarrett (1974). Table C.64 summarizes the expected population doses from accidents during plutonium oxide, spent fuel, and HLW shipment. Table C.65 lists the frequencies and population doses for accident scenarios associated with spent fuel and plutonium oxide transportation, by rail and truck, respectively, as determined by Cohen and Dance (1975). Erdmann et al. (1979) identified accident scenarios for four transportation systems: spent fuel by rail and truck, plutonium oxide by truck, and HLW by rail. The associated frequencies and population doses are tabulated in Table C.66. Fullwood and Jackson (1980) examined rail shipment of spent fuel and HLW, identifying and quantifying the accident scenarios presented in Table C.67. Projekt Sitherkeitsstudien Entsorgung (PSE 1981) and Elder (1981) identified and quantified transportation accident scenarios for rail shipment of spent fuel (Tables C.68 and C.69), although they did not convert these estimates into expected population doses.

Having surveyed available literature and extracted the quantitative information deemed representative of non-reactor fuel cycle risks, Pelto et al. then scaled the risk estimates on a consistent basis for the purpose of comparison. Site-specific

conditions for the representative facilities were input to the ALLDOS computer code to yield the public risks from each nuclear fuel cycle element as summarized in Table C.70. Those elements with comparable risks were grouped together into two categories as follows: 1) conversion, enrichment, MOX fuel refabrication, fuel reprocessing, spent fuel storage, and transportation, with expected population doses from 0.012 to 0.27 person-rem/GWe-year; and 2) milling, fuel fabrication, HLW (solidified) storage, and geologic waste disposal (preclosure period), with expected population doses from 4.0E-5 to 0.0050 person-rem/GWe-year.

C.7 Cost-Benefit Analysis of Unfired PuO_2 Pellets as an Alternative Plutonium Shipping Form (NUREG/CR-3445)

NUREG/CR-3445 (Mishima et al. 1983) is of interest not so much for the value-impact analysis performed (which was fairly preliminary), but for the data presented on industry costs and occupational exposure incurred during the pelletizing and reconstitution processes for PuO_2. Mishima et al. (1983) considered the potential costs of altering the current practice of shipping PuO_2 as a powder to one where it is shipped as unfired pellets. The pellets would then be reconstituted into powder following receipt at the fuel fabrication facility. Direct costs (measured in 1983 dollars) consisted of equipment, labor, redesign of process and transport procedures, supplies, services, and additional transport costs. A facility throughput of 20 kg/day was assumed.

Capital equipment costs for pellet fabrication and powder reconstitution are listed in Tables C.71 and C.72, respectively. Tables C.73 and C.74 present operating costs associated with the startup and process, respectively, for both pellet fabrication and powder reconstitution. Indirect costs (occupational doses) are summarized in Tables C.75 and C.76 for pellet fabrication and powder reconstitution, respectively.

C.8 A Regulatory Analysis on Emergency Preparedness for Fuel Cycle and Other Radioactive Material Licensees (NUREG-1140)

In NUREG-1140, McGuire (1988) performed a regulatory analysis covering emergency preparedness for non-reactor nuclear facilities, both fuel and non-fuel cycle. It contained five of the six steps required in a regulatory analysis, omitting only the last (implementation). The regulatory analysis began with the following statement of the problem:

> "Should the NRC impose additional emergency preparedness requirements on certain fuel cycle and other radioactive material licensees for dealing with accidents that might have offsite releases of radioactive material?"

The objective was to answer this question and, if answering yes, determine how to impose the requirements.

The identification and preliminary analysis of alternative approaches to the problem came next. A description of the proposed actions and justification for their need were spelled out. Three alternatives were cited:

1. adopting a regulation containing the proposed requirements
2. imposing the requirements by license condition
3. imposing no new requirements (the status quo, or baseline, case).

As part of the preliminary analysis, McGuire (1988) established the following criterion for deeming an accident significant. A release causing a person outside the plant along the plume centerline to receive an EDE > 1 rem, a thyroid dose > 5 rems, or an intake of soluble uranium > 2 mg would constitute a significant accident. These values were chosen from the lower ends of the dose ranges for which the EPA states that protective actions should be considered. Fifteen classes of licensees were identified, from which those which could have significant accidents were identified for further analysis. Those identified consisted of the following:

- Fuel Cycle Facilities

  - uranium mills
  - UF_6 conversion plants
  - enrichment plants
  - uranium fuel fabrication plants
  - plutonium fuel fabrication plants
  - spent fuel storage facilities
  - spent fuel reprocessing plants
  - nuclear fuels research facilities (special nuclear materials).

- Byproduct Material Facilities (only those handling large enough quantities of unsealed radioactive material so that the need for offsite emergency preparedness should be considered)

  - radiopharmaceutical manufacturers
  - sealed source manufacturers.

For the estimation and evaluation of values and impacts, McGuire (1988) performed the following three steps for each facility class:

1. survey the accident history, including similar facilities in the database

2. quantify the accident source terms, using NRC analyses of several severe accidents possible at non-reactor facilities

3. calculate the offsite dose via a "standard" dose calculation (i.e., assume a release fraction, atmospheric dispersal model, and three exposure pathways [inhalation and cloud- and ground-shine]).

The number of licensees potentially affected consisted of 14 fuel cycle and about 17 byproduct material licensees. Of the three alternatives approaches to the problem identified earlier, the first two would have the same values and impacts, and the third represented the baseline case for comparison. Thus, only one value-impact analysis was performed, with the value measured in terms of public risk reduction.

Two cases were considered for estimating the risk reduction. The first assumed a release occurred with an EDE of 5 rems at a distance of 100 m under the Pasquill Class F atmospheric stability condition and a wind speed of 1 m/s. Under these conditions, the area over which the EDE would exceed 1 rem was estimated to be 0.006 mi^2. For a typical population density of 3000/mi^2 at the facilities, about 20 people would be in the estimated area, with 80% (16) indoors and the remainder (4) outdoors. An outdoor person would receive an average dose of about 3 rems, while one indoors would receive 1/2 of that due to protection from the building. For the base case, this amounted to a total collective dose of about 40 person-rems. The dose savings was assumed to be 1/2 of that, or about 20 person-rems. If 0.0001 cancer death occurred per rem, the number of lives saved would be about 0.002 for the worst meteorology, or about 2E-4 for an overall average meteorology.

To estimate the frequency of a major release, McGuire (1988) used statistics from the insurance industry. A fire loss occurred in unsprinklered commercial and industrial facilities at a rate of about 0.006/yr. Where available, sprinklers failed at a rate of 0.038/demand. Thus, a reasonable estimate of the fire loss rate for a sprinklered facility (typical of radioactive licensees) would be about 0.006/yr x 0.038, or 2E-4/yr. Assuming additional site-specific factors would halve this rate, an estimate of 1E-4/yr was generated for the frequency of a major radioactive release. When multiplied by the consequence estimate of 2E-4 life saved on average, an estimate of 2E-8 life saved per facility per year was obtained as the public risk reduction. In monetary terms, this translated to $0.2/facility-yr, assuming a value of $1E+7/life.

The second case analyzed was essentially equivalent to the first, except that the 5-rem EDE was now assumed at a distance of 1,000 m. This translated into an increase in the area over which the EDE would exceed 1 rem to 0.15 mi^2, encompassing 450 people. Retaining the other assumptions from Case 1, the public risk reduction for Case 2 was estimated at 4E-7 life saved per facility per year, or $4/facility-yr.

Costs to implement the proposed action were based on data from two radiopharmaceutical manufacturers, coupled with the assumption that the licensee would be required to have a 50-page plan containing instructions for what to do in the event of an emergency such as a fire. The initial setup would cost $84,000 ($8,400/yr spread over 10 years) for a small program and $550,000 ($55,000/yr) for a large program. Labor costs were assumed to be included as 1/2 to 2/3 of these costs at a rate of $30/hr. For either program, the annual operating cost would be $18,000. Thus, the industry costs were estimated to be about $26,000/facility-yr for a small program and $73,000/yr for a large one. The NRC cost to review and inspect the plan was estimated to be $4,000/facility-yr, yielding total cost estimates of about $30,000/facility-yr (small program) and $77,000/facility-yr (large program).

For the presentation of results, McGuire utilized a simple table, as follows:

Licensee Size	Cost	Benefit
Small	$30,000/facility-yr	$0.2/facility-yr
Large	$77,000/facility-yr	$4/facility-yr

The expected life savings amounted to 2E-8/facility-yr for small licensees and 4E-7/facility-yr for large ones. Roughly 20-30 small and 2-3 large licensees could be expected to achieve these savings. These results clearly indicated that the potential risk reduction to the public was very small.

The decision rationale for this regulatory analysis was summarized as follows:

> "The cost of this [emergency] preparedness may not be justified in terms of protecting public health and safety. Rather, we would justify it in terms of the intangible benefit of being able to reassure the public that, if an accident happens, local authorities will be notified so they may take appropriate actions."

> "Although emergency preparedness for fuel cycle and other radioactive material licensees cannot be shown to be cost effective, the NRC feels that such preparedness represents a prudent step which should be taken in line with the NRC's philosophy of defense-in-depth, to minimize the adverse effects which could result from a severe accident at one of its facilities."

McGuire (1988) also presented dose tables for various accident releases at selected fuel and non-fuel cycle facilities. Tables C.77-C.81 address selected fuel cycle facilities. Tables C.82-C.86 present doses for non-fuel cycle facilities (i.e., byproduct material facilities).

C.9 Regulatory Impact Analysis of Final Environmental Standards for Uranium Mill Tailings at Active Sites (EPA 520/1-83-010)

In EPA 520/1-83-010 (EPA 1983), the EPA performed a regulatory impact analysis covering uranium mills. Specifically, EPA addressed the disposal of uranium mill tailings at active sites by evaluating the impact of final environmental standards for this disposal. The standards considered were ones which addressed only the disposal of mill tailings; releases during the operations phase of a uranium mill were not included. The study contained the six steps required in a regulatory analysis, following Executive Order 12291 (see Section 1).

The statement of the problem was essentially to investigate final environmental standards for disposal of uranium mill tailings in both the short and long term. Uranium mill tailings pose an environmental hazard through the release of radon, a radioactive gas. Four methods of controlling these releases were identified:

1. discourage misuse (e.g., use of tailings in construction of homes)

2. provide barriers to radon emission

3. prevent the spread of tailings

4. protect the tailings from water intrusion.

The objective was to determine which of many alternative standards proposed to limit emissions from uranium mill tailings would be optimal from a health and cost perspective.

The identification and preliminary analysis of alternative approaches to the problem addressed 13 proposed standards for disposal. These standards were defined according to the ability to control radon release after disposal (in terms of radon release rates) and the length of time for which such control would be required. The spectrum of alternatives is displayed in Table C.87, ranging from a baseline case of no controls (Alternative A) to the most stringent case limiting radon release to 2 pCi/m^2-s using passive control for 1,000 years, with improved radon control during operations for new piles (Alternative D5). Both existing and new tailings piles (at both existing and future facilities) were considered.

As part of the preliminary analysis, the status of licensed conventional U.S. mill sites as of 1/1/83 was ascertained and tabulated in EPA 520/1-83-010 (EPA 1983) Chapter 2. Characteristics of the control methods for both existing and new piles were specified for the 13 alternative standards in Tables C.88 and C.89, respectively.

EPA next proceeded to the estimation and evaluation of values and impacts. The value was quantified in terms of health effects averted through control of radon emissions. This was accomplished in two steps. First, each alternative was characterized in terms of how well it provided for the following three items:

1. stability of the tailings pile

2. control of radon emissions from the pile

3. protection of the pile against water intrusion.

These are summarized in Table C.90. Next, the values were quantified on a comparative basis through the definition of an "effectiveness index" for the four release control methods previously identified. Each alternative was rated in terms of this index using a scale from 1 to 10, considering the factors shown in Table C.90. A weighted average effectiveness was calculated for each alternative.

Costs for disposal of existing and new mill tailings piles were estimated in 1983 dollars for the control method associated with each alternative based on selected model pile sizes (2, 7, and 22 metric tons (MT) for existing piles; 8.4 MT for new piles). The average cost per effectiveness index was calculated for each alternative as the ratio of the model pile disposal costs to the previously estimated effectiveness index. These were then converted to the incremental cost per alternative i as follows:

$$(\text{Disposal Cost}_i - \text{Disposal Cost}_{i-1})/(\text{Effectiveness Index}_i - \text{Effectiveness Index}_{i-1})$$

These calculations are summarized in Table C.91 for both existing (all three sizes) and new tailings piles.

The incremental costs were plotted against the effectiveness indices for the various alternatives for each model pile size (see Figure C.3). The alternatives exhibiting negative or small positive slopes in the plot were the desirable ones. Sensitivity analyses were conducted by varying the weighing factors for the effectiveness index and considering the cost per effectiveness index for 100 rather than 1,000 years.

The analysis of industry cost and economic impact was the next item. Thirty-seven economic impact cases for the 13 alternative standards were identified by considering the following three categories for each of the 12 non-baseline alternatives (i.e., all but Alternative A):

1. existing mill tailings

2. new mill tailings at existing mills

3. new mill tailings at new mills.

For existing tailings, disposal costs were assumed to be incurred from 1983 through 1987. For new tailings, disposal costs were assumed to be incurred from 1983 through 2000. Present worth calculations were performed for three discount rates (0, 5, and 10%). The cost estimates for all 13 alternative standards are summarized in Table C.92.

The presentation of results consisted of the various tables and figures produced during the value-impact analysis, especially the summary Tables C.90 and C.92. The decision rationale for selection of a recommended disposal standard was as follows. The standards were based on current population data, with no "relaxation" for "remote" sites. Passive controls were preferred over institutional ones because of the need to provide long-term protection. The radon emission limit of 20 pCi/m^2-s was selected since both the cost-effectiveness and practicality of providing additional radon control dropped rapidly below this threshold. As a result, Alternative C3 was recommended since it best met these criteria while minimizing economic impact and providing high, although not maximum, values.

The implementation step of the regulatory analysis was briefly addressed when EPA considered the relationship of the proposed standards to the Regulatory Flexibility Act (see Guidelines Section 5.2). An analysis of compliance with this Act was cited as unnecessary because the standards would not significantly impact a substantial number of small entities.

C.10 Value-Impact Analysis of Accident Preventive and Mitigative Options for Spent Fuel Pools (NUREG/CR-5281)

In NUREG/CR-5281, Jo et al. (1989) conducted what essentially amounted to a regulatory analysis of a non-reactor nuclear fuel cycle facility using the 1983 Handbook (Heaberlin et al. 1983) as guidance. It included the six steps required in a regulatory analysis. In the statement of the problem, Jo et al. observed that spent fuel pools at power reactor sites were being required to store more fuel than originally anticipated because of the lack of a waste reprocessing plant or repository. The objective of the analysis was to assess possible preventive and mitigative strategies for spent fuel pool accidents in light of the pools being used to store more spent fuel than originally anticipated.

In the identification and preliminary analysis of alternative approaches to the problem, Jo et al. proposed three main alternatives for spent fuel pool accident prevention and mitigation:

1. reduction of pool inventory
2. improvement of reliability of pool makeup water
3. implementation of one or more "representative" mitigative options.

Under the first alternative (inventory reduction), limited low-density fuel storage would be permitted in the pool. Essentially, fuel discharged from the reactor within the past two years would be stored in a low-density configuration, promoting air cooling of the fuel in the event of a loss of pool water inventory. This alternative would require that a utility replace its current high-density storage racks with low-density ones, increasing the need for added storage capacity. Five options were considered:

1. supplemental wet pool storage
2. drywell storage
3. storage in a vault
4. storage in a cask
5. storage in a silo.

The preliminary analysis consisted of collecting spent fuel and fuel pool data for all U.S. plants through 1986 (presented in NUREG/CR-5281 Chapter 3).

The analysis proceeded to the estimation and evaluation of values and impacts (Alternative 1), using the 1983 Handbook as a guide. Risk-dominant sequences for a spent fuel pool were identified. They consisted of structural failure due to an earthquake and a compromise of structural integrity through impact of a heavy object, such as a storage cask. For this latter accident, the conditional probability of pool structural failure was taken to be one. Public health and offsite property damage were estimated using the MACCS computer code (Chanin et al. 1990), specifying both a best-estimate and worst-case radiological source term. Accidental occupational exposure was assumed to be similar to that from TMI-2 (i.e., < 4580 person-rem). Onsite property damage was assumed to result from loss of pool inventory followed by a zircaloy fire which spread throughout the pool. This resulted in the melting of 1/2 of the fuel cladding and contamination of containment, with a subsequent loss of containment integrity. The accident frequencies, offsite consequences (public health and property damage), and onsite property damage are tabulated in Tables C.93-C.95, respectively. The costs (in 1983 dollars) given in Tables C.94 and C.95 were expanded on a plant-by-plant basis in NUREG/CR-5281 Appendix A, serving as input to the industry cost estimates provided in Table C.96.

The presentation of results (Alternative 1) consisted of two summary tables. The first (Table C.97) listed all parameters affecting the attributes considered in the value-impact analysis, including data references. The second (Table C.98) was the standard value-impact analysis summary table in the 1983 Handbook, including the net value and ratio calculations for both the best-estimate and worst cases. Additional value-impact measures were indicated in the second table (i.e., the ratio of benefits (in dollars) to cost and the cost of implementation per averted person-rem).

Sensitivity studies were performed by varying the following:

- pool failure probability
- discount rate
- monetary conversion factor for health effects
- site economics
- meteorology.

Only the first item (increase in failure probability) could shift the net value to the positive side. Based on the analysis results, the decision rationale for Alternative 1 concluded that it was not justified due to the negative net value and low ratios, indicative of an action whose overall effect is undesirable.

Alternative 2 (improvement of pool makeup water reliability) addressed the problem of interruption of the circulation of pool cooling water. Such interruption could result in a pool temperature rise until boiling would occur. Thermal-hydraulic analyses from FSARs indicated a considerable time lag between loss of circulation and uncovering of fuel assemblies. Therefore, much time would be available to restore normal cooling or implement a standby cooling option.

In the estimation and evaluation of values and impacts (Alternative 2), it was decided to examine four "generic" pool cooling and makeup systems, ranging from the minimum Standard Review Plan (SRP) requirement to crediting three makeup trains, including the fire system. Scoping calculations were performed to estimate failure frequencies. These are quantified in Table C.99. Radiological impacts were found to be negligible. Further quantification was conducted only for averted cost (resulting from replacement power until pool cooling is restored) and industry implementation costs (discounted at 10%), with the costs in 1983 dollars. Table C.100 is essentially the presentation of results (Alternative 2) and indicates very small ratios of averted to implementation cost for each of the four systems. Thus, the decision rationale was that Alternative 2 would not be justified.

Alternative 3 consisted of the following three representative mitigative options for spent fuel pool accidents:

1. M1 = covering fuel debris with solid materials
2. M2 = installing a water spray system above the pool
3. M3 = installing a building ventilation gas treatment system to reduce the airborne concentration of radionuclides prior to their release.

Two representative accident sequences were postulated. The first (A1) consisted of a complete loss of pool water inventory, followed by a zircaloy fire, representing an upper bound in terms of radiological release. The second (A2) consisted of a complete loss of pool water inventory, followed only by cladding failures (i.e., no zircaloy fire). This represented a best estimate in terms of radiological release.

The estimation and evaluation of values and impacts (Alternative 3) considered the six possible pairings of accident and mitigation scenarios (i.e., A1/M1, A1/M2, A1/M3 [dismissed since M3 could not cope with A1], A2/M1, A2/M2 [judged to be the same as A1/M2] and A2/M3). These reduced to four cases, for which a crude value-impact assessment was

performed, similar to what was termed a "first approximation" in Chapter 2 of the 1983 Handbook. Offsite consequences were estimated using MACCS for both a worst case (high population density and worst source term) and an average case (average population density and average source term). Costs (in 1983 dollars) were generated by assuming a Category I storage tank of 200,000-gal capacity and a complete spray system would need to be installed. The calculation results for each of the four cases are presented in Table C.101.

The presentation of results (Alternative 3) consisted of the value-impact summary (Table C.102), which indicated that installation of pool sprays was not cost effective, based on the best-estimate measures provided in the table [net benefit, ratio, ratio of benefits (in dollars) to cost, and cost of implementation per averted person-rem]. The decision rationale (Alternative 3) was the same as that for the other alternatives, namely not to recommend the alternative based on the value-impact results. However, the possibility of implementing Alternative 3 on a plant-by-plant basis was mentioned, since the high-estimate measures indicated marginal cost effectiveness. At plants where the conservative assumptions used in NUREG/CR-5281 might be approached, Alternative 3 might warrant implementation.

C.11 Nuclear Fuel Cycle Facility Accident Analysis Handbook (NUREG-1320)

In NUREG-1320, Ayer et al. (1988) provided methods to determine the release of radioactive material to the atmosphere and within a plant resulting from potential accidents at the following types of nuclear fuel cycle facilities: fuel fabrication, fuel reprocessing, high-level waste storage/solidification, and spent fuel storage. Six types of accidents were addressed: fires, explosions, spills, tornadoes, criticalities, and equipment failures. These were chosen as being the major contributors to the radiological accident risk from the operations of fuel cycle facilities. While NUREG-1320 provided methods for calculating consequences from these accidents, it did not provide methods for determining the accident probabilities.

Ayer et al. assembled accident descriptors for both the facilities and their processes. For simplicity, a representative facility was developed containing common descriptors from each of the four types. These descriptors are shown in Table C.103. For each type of fuel cycle facility, Ayer et al. assembled process accident descriptors, listed in Tables C.104-C.107. These descriptors were based on the following process parameters:

- quantity, chemical, and physical form of radionuclides
- quantity and characteristics of flammable and combustible materials
- radionuclide content of materials with high fissile material content
- characteristics of process equipment providing airborne containment or confinement
- others that could enhance or mitigate airborne release (e.g., pressurized systems).

Source terms for each of the six types of accidents were discussed. Behavioral mechanisms for airborne particles were summarized, as shown in Table C.108. Following these were the detailed descriptions of the calculational methods for estimating the source terms from each type of accident. Both hand and computer calculations were presented. All necessary reference tables and figures for conducting a "standard" analysis were provided, along with additional references for "specialized" assessments.

To illustrate the use of the analytic procedures, Ayer et al. identified four "primary" and seven "secondary" sample problems, as follows:

Primary:

1. Slug Press Fire (MOX Fuel Manufacturing)
2. Solvent Extraction Fire (Fuel Reprocessing)
3. Glove Box Explosion
4. Powder Spill During Tornado

Secondary:

5. Flashing Spray (Fuel Reprocessing)
6. Pressurized Release of Powder
7. Radioactive Powder Spill
8. Liquid Spill of Plutonium Nitrate
9. Aerodynamic Entrainment of Powders from Thick Beds During Tornado
10. Fragmentation of Brittle Solids by Crush Impact During Tornado
11. Inadvertent Criticality in a Fuel Reprocessing System

For each, Ayer et al. conducted a sample source term calculation, showing use of both hand calculations and computer tools. The main computer codes were as follows:

1. TORAC - for analysis of tornado-induced gas dynamics and material transport (Andrae et al. 1985)

2. EXPAC - for analysis of explosion-induced gas dynamics and material transport (Nichols and Gregory 1988)

3. FIRAC - for analysis of fire-induced gas dynamics, thermal, and material transport (Nichols and Gregory 1986)

Although designed mainly for analysis of the ventilation system (the primary airborne release pathway), these codes can be used for other airflow pathways as well. The codes, especially TORAC, can be extended to model accidents associated with criticality, spills, and equipment failure. Limitations involve the gas dynamics models, which are based strictly on lumped-parameter formulations, and the material transport capability, which is very basic and relies on information found in the literature.

For each of the primary sample problems, the authors of NUREG-1320 carried through a complete radioactive airborne release calculation. The results were presented through a series of tables and figures, too numerous to reproduce here.

C.12 Endnotes for Appendix C

1. The 1990 BEIR V report updated the radiation exposure coefficient to 5E-4 fatal cancer/person-rem, or inversely 2,000 person-rem/fatal cancer (National Research Council 1990).

2. For consistency when using Tables C.42-C.47, or values derived from them, the analyst should employ 5,000 person-rem/health effect, the conversion factor assumed by Daling et al. (1990), from whom these tables have been extracted. However, the analyst should be aware that BEIR V updated the radiation exposure coefficient to 5E-4 fatal cancer/ person-rem, or inversely 2,000 person-rem/fatal cancer (National Research Council 1990).

3. Recent experience at the DOE Savannah River Site suggests frequencies of glove failure as much as 10 times higher.

4. Recent experience at the DOE Savannah River site suggests frequencies of dissolver seal failure as much as 1,000 times higher.

5. Recent experience at the DOE Savannah River Site suggests frequencies of fire in low level waste and fuel assembly drop as much as 100 times higher.

6. The iodine-129 part of Table C.81 is suspect. I-129 has a half-life of 17 million years and, correspondingly, specific activity of 1.8E-4 Ci/g. I-129 emits a 150 kev beta and, 9% of the time, a 40 kev gamma, both significantly lower energies than the corresponding values for I-131. The biological half-life of I-129 in the thyroid is 120 days. The dose conversion factor for I-129 would be approximately 0.5 rem/micro-Ci administered to the thyroid. The values given in the table for I-129 releases and the corresponding thyroid doses seem inconsistent with each other and with the properties of I-129 given above. The thyroid is relatively radio-resistant and thyroid cancer relatively treatable; the mortality risk factor for the thyroid is 5.0E-6/person-rem (i.e., one fatality per 2.0E+5 person-rem exposure to the thyroid).

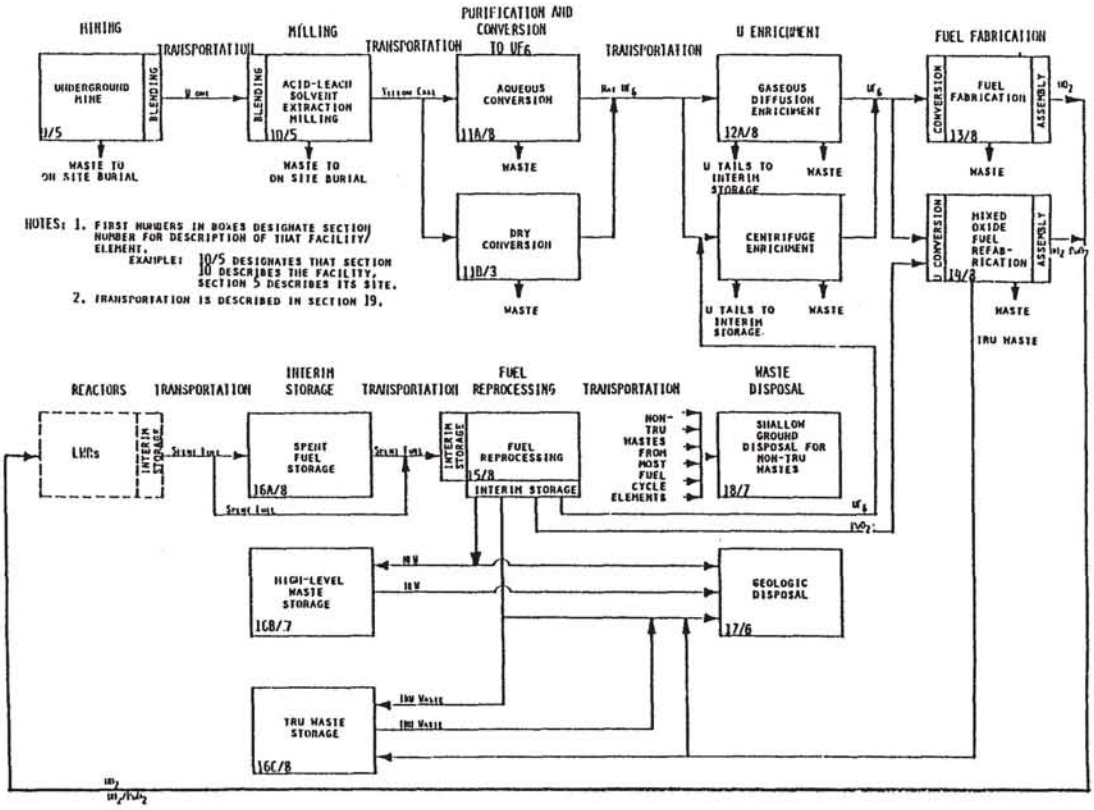

Figure C.1 Uranium process flow among fuel cycle facilities

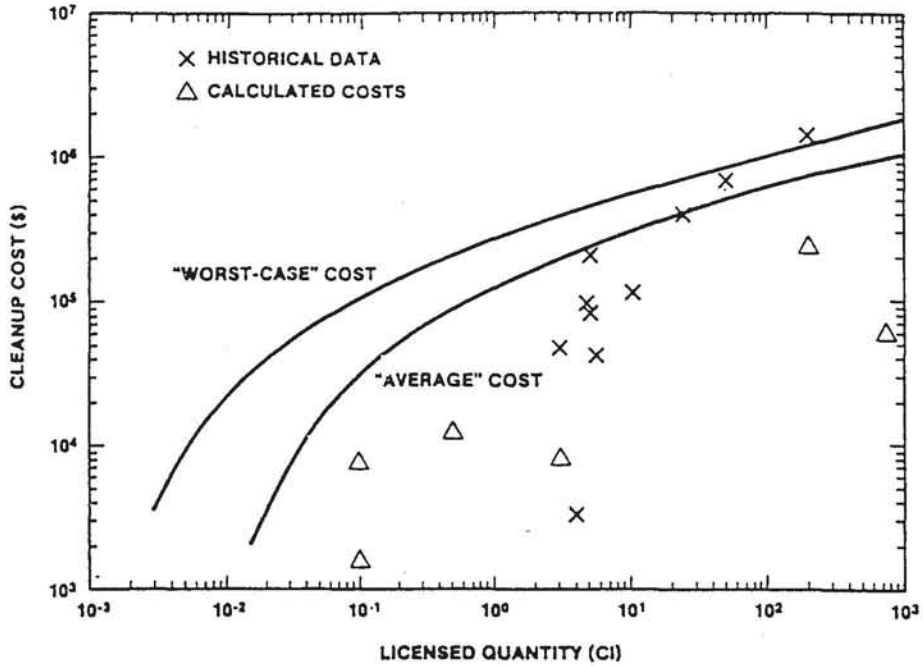

Figure C.2 Cleanup cost as a function of licensed radionuclide quantity for non-reactor nuclear material licensees (Ostmeyer and Skinner 1987, Figure 4.3)

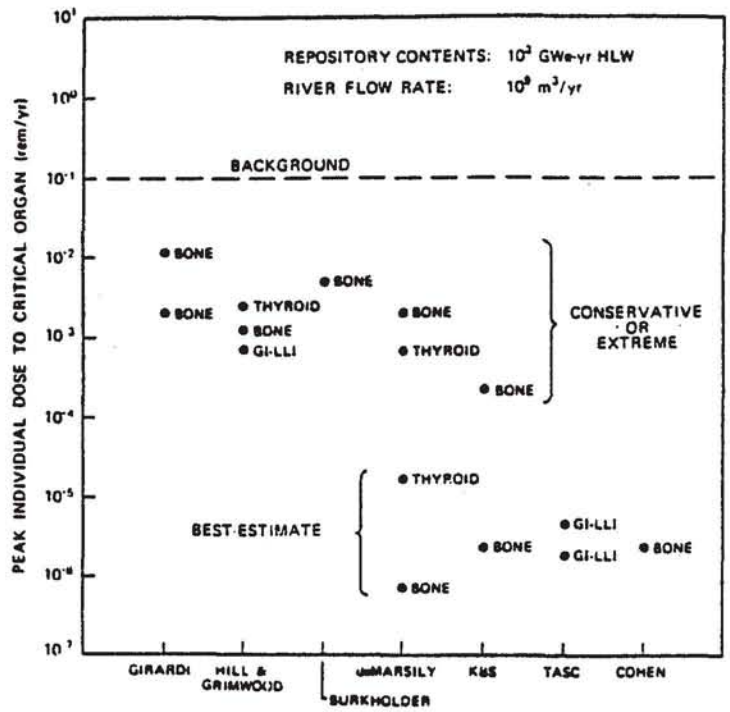

Figure C.3 Normalized peak individual doses for reviewed studies of geologic waste disposal postclosure period (TASC 1979)

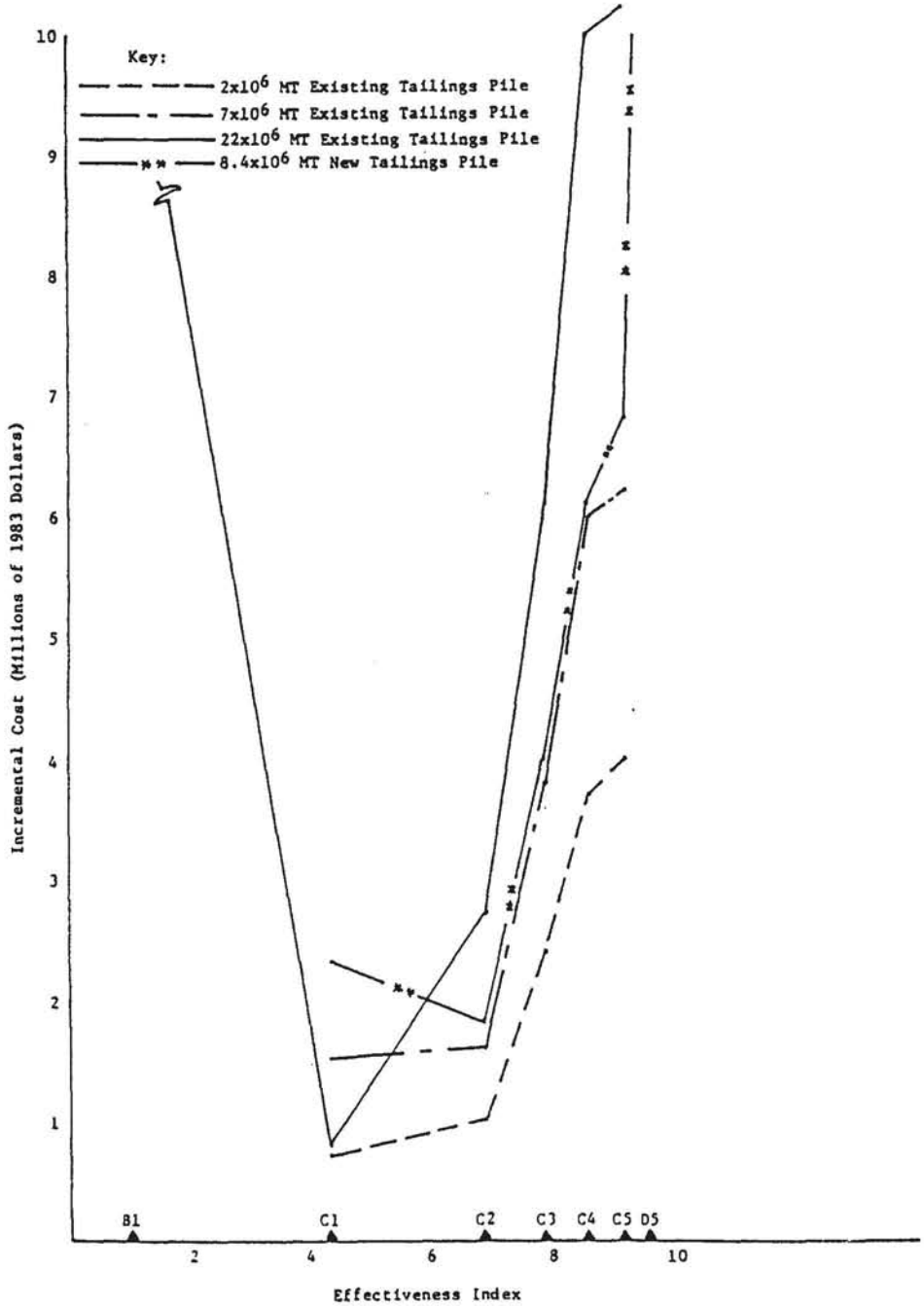

Figure C.4 Incremental cost of alternative control methods for uranium mill tailings (EPA 1983, Figure 4.6)

Table C.S.1 Summary description of representative uranium fuel cycle facilities (Schneider et al. 1982, Table 2.2)

Item	Fuel Cycle Element						
			Conversion		Enrichment		
	Mining (Section 9)	Milling (Section 10)	Aqueous (Section 11.A)	Dry (Section 11.B)	Gaseous Diffusion (Section 12.A)	Gas Centrifuge (Section 12.B)	Fuel Fabrication (Section 13)
Facility Based On	Ambrosia Lake	Highland	Sequoyah	Metropolis	Stand-alone, combination of 3 US plants	Conceptual stand-alone	Westinghouse/ Columbia, SC
Major Process	Underground room-and-pillar, cutting, blasting	Acid-leach, solvent extn., precipitation	Solvent extraction hydrufluorination, fluorination	Hydrofluorination, fluorination, fractional distillation	Gaseous diffusion, cold trapping, waste recovery	Gas centrifuge, cold trapping, waste recovery	ADU process, calcination, compaction, sintering, waste recovery
Capacity							
Feed/Mg/yr	Ore Vein/varies	Ore/6.6E5	Yellowcake/1.2E4	Yellowcake/7400	UF_6/1.3E4	UF_6/1.3E4	UF_6/2100
Product/Mg/yr[a]	Ore/1.3E6	Yellowcake/930	UF_6/9100	UF_6/6800	UF_6/1400	UF_6/1400	Fuel assemblies/1460
GWd_e Equivalent/yr[b]	3300	1600	15,400	11,500	15,500	15,500	16,000
Operating hr/d and d/yr	16/312	24/365	24/365	24/300	24/365	24/365	24/350
Total Staff	1100	92	155	NA	1400	2150	1850
Contact Operations	-All; most is not direct contact	-All; most is not direct contact	-All; most is not direct contact	-All; most is not direct contact	-All maintenance	All maintenance	Receiving, rod and element assemblage, maintenance
Remote Operations	None	None	None	None	Most operations	Most operations	Chemical processing, scrap recovery (not shielding)
Alternative Concepts	Open-pit, in-situ (Solution)	Alkaline leach, ion exchange	None	None	U Laser, UF_6 Laser, U plasma ion	U Laser, UF_6 Laser, U plasma ion	Fluidized bed, powder front-end

Table C.S.1 (Continued)

Item	Fuel Cycle Element							
			Waste Storage					
	MOX Fuel Refabrication (Section 14)	Fuel Reprocessing (Section 15)	Spent Fuel (Section 16.A)	High-Level Waste (Section 16.B)	TRU Waste (Section 16.C)	Geologic Waste Disposal (Section 17)	Shallow Land Waste Disposal (Section 18)	Transportation (Section 19)
Facility	Conceptual Westinghouse Recycle Fuels Plant	Barnwell with conceptual additions	Conceptual, stand-alone, water basin	Conceptual, stand-alone, dry-well	Conceptual, stand-alone, vault and outside pad	Conceptual NWTS disposal repository in salt formation	Conceptual stand-alone	State-of-the-art; specific to each material
Major Process	Powder blending, compaction, sintering, waste recovery	PUREX, UF_6 and Pu conversion, HLW vitrification	Wet unloading and storage, ion exchange, heat exchange	Wet unloading, encapsulation, dry-well storage	Solids handling (shielded and unshielded), above grade storage	Solids handling, underground blasting, machine excavation	Burial in below-grade trenches	Truck and rail transport cross-country
Capacity								
Feed/Mg/yr	UO_2; PuO_2/436; 18	Spent fuel/1500	Spent fuel/500 HM	Solidified HLW/320	TRU-waste/50,000	Spent fuel, HLW TRU waste/3900 HM equiv.	LLW, ILW/50,000 m^3	Individual shipping capacity/container for each material
Product/Mg/yr[a]	MOX assemblies/ 400 HM	U/1410; Pu/15	NAp	NAp	NAp	NAp	NAp	
GWd_e Equivalent/yr[b]	4400	15,500	5500	15,500	27,600	43,000	29,000	--
Operating hr/d and d/yr	24/350	24/300	24/365	24/365	20/300	24/365	8/250	Varies
Total Staff	260	500	~50	~100	28	259	70	1-2/shipment
Contact Operations	~All; most is not direct contact	Receiving, some maintenance	Receiving, maintenance	Receiving, maintenance	All CH-TRU ~1/2 RH-TRU	Receiving, ~All CH-TRU ~1/2 RH-TRU	~All; most is not direct contact	Direct contact with containers
Remote Operations	Pellet preparation, scrap recovery	Most operations	Fuel unloading and handling, waste-treatment	Most operations	~1/2 RH-TRU	~1/2 RH-TRU ~All spent fuel, HLW	None	Remote unloading for most materials
Alternative Concepts	Co-precipitation, remote maintenance	Many variations of PUREX, Others	Dry well, cask, tunnel rack, vault consolidation	Dry well, cask, tunnel rack, vault	Below-grade, mine storage, berms	Basalt, granite, tuff; self-shielded packages	Onsite processing, various burial variations	Variations of hardware for most containers

NA = not available
NAp = not applicable
(a) As U and/or Pu except from mining.
(b) Based on product rate to fuel fabrication and 11,000 MWd_e/MgHM.

Table C.1 Frequency of contamination incidents for non-reactor nuclear material licensees (Ostmeyer and Skinner 1987, Table 3.1)

	Application/use class	Number of Incidents[a]	Number of Licenses	Frequency (incidents licensed-activity-yr)
I)	Research/teaching & Diagnostic/therapeutic	7	5100	0.00023
II)	Measurement/calibration & irradiation	6	5715	0.00018
III)	Manufacture/distribution	8	510	0.0026
IV)	Service organizations/ waste processing/storage	0	49	---
V)	Source and Special Nuclear Material Fuel cycle	6	72	0.014

(a) For a six year reporting period.

Table C.2 Incident cleanup cost by material quantity class for non-reactor nuclear material licensees (Ostmeyer and Skinner 1987, Table 4.1)

Licensed Material Quantity	Incident Cleanup Cost ($) LQR Case	Average
10 mCi - 0.1 Ci	70,000	15,000
0.1 Ci - 1.0 Ci	200,000	75,000
1.0 Ci - 10 Ci	450,000	230,000
10 Ci - 100 Ci	800,000	500,000
100 Ci - 1000 Ci	1,500,000	900,000

Table C.3 Economic risk as a function of material application/use and licensed curie quantity for non-reactor nuclear material licensees (Ostmeyer and Skinner 1987, Table 5.1)

Application/Use Class	Economic Risk ($/licensed activity/yr) by Licensed Quantity[a]				
	0.01 Ci-0.1 Ci	0.1 Ci-1.0 Ci	1.0 Ci-10 Ci	10 Ci-100 Ci	100 Ci-1000 Ci
I) Research/Teaching/ Experimentation and Diagnostic/Therapeutic	4	29	50	120	200
II) Measurement/Calibration Irradiation	3	20	40	90	160
III) Manufacture/Distribution	40	230	520	1,300	2,300

(a) Risk is given by the product of incident frequency and average incident cost.

Table C.4 Summary of economic risk at a reference uranium mill (Philbin et al. 1990, Table 4.1)

Incident Scenario	Consequence Description	Cleanup Cost [uncertainty]	Frequency per year [uncertainty]	Economic Risk (per year) [uncertainty]
Minor facility releases	Hundreds of g to tens of kg U released. Confined to small areas in plant.	$1100 [$900-$1,400]	0.0077 [0.0048-0.014]	$8 [$5 - $15]
Solvent Extraction Fire	Up to several kg U released. Cleanup limited to process area.	$370,000 [$300,000-$460,000]	0.0031 [0.0014-0.0082]	$1100 [$460-$2900]
Fire/Explosion in Yellocake Dryer	Up to several Kg U released. Cleanup limited to process area.	$500,000 [$400,000-$630,000]	0.0031 [0.0014-0.0082]	$1600 [$620-$3900]
Major Facility Fire	Cleanup of main process area and downwind facility area (22.5° sector).	$1.5M [$1.2M-$1.9M]	0.00020 [0.00013-0.00040]	$300 [$160-$550]
Retention Pond Failure with Slurry Release	8 x 10^6 lbs solids released. Stabilize pond and spill areas and clean up spill.	$2.5M [$2M-$3.1M]	0.023 [0.017-0.033]	$58,000 [$39,000-$86,000]
Slurry Release from Distribution Pipe	2.2 x 10^5 lbs solids released on site. Stabilize spill area. Clean up spill area.	$69,000 [$55,000-$86,000]	0.0062 [0.0037-0.012]	$430 [$230-$800]
Tornado	Thousands of kg U released - Clean up buildings and downwind site area (45° sector).	$3M [$2.4M-$3.8M]	0.000080 [0.000025-0.00025]	$240 [$70-$780]
Transportation	Entire load of ore spilled or 1/3 yellowcake drums spill. Area cleanup	$300,000 [$225,000-$375,000]	0.0031 [0.0014-0.0082]	$930 [$370-$2300]
			TOTAL FACILITY ECONOMIC RISK	$63,000 [$43,000-$91,000]

Table C.5 Summary of economic risk at a reference uranium hexafluoride conversion plant (Philbin et al. 1990, Table 4.2)

Incident Scenario	Consequence Description	Cleanup Cost [uncertainty]	Frequency per year [uncertainty]	Economic Risk (per year) [uncertainty]
Minor facility release	Release of hundreds of grams to tens of kg U. Cleanup limited to immediate area of the release.	$1,100 [$900-$1,400]	0.13 [0.081-0.22]	$140 [$80-$250]
Uranyl Nitrate Evaporator Explosion	Release of several kg of U. Cleanup of process building.	$730,000 [$580,000-$910,000]	0.00032 [0.00010-0.0010]	$230 [$70-$750]
Hydrogen explosion during reduction	Release of several kg of U. Cleanup of process area.	$730,000 [$580,000-$910,000]	0.0070 [0.0010-0.050]	$5,100 [$710-$37,000]
Solvent extraction fire	Several hundred kg U released - Clean up solvent extraction building.	$81,000 [$65,000-$100,000]	0.00040 [0.00013-0.0013]	$30 [$10-$100]
Release from UF_6 cylinder	Release of up to 2500 kg of U. Clean up immediate area.	$1.2M [$0.96M-$1.5M]	0.021 [0.011-0.081]	$25,000 [$9,100-$70,000]
Distillation Valve Rupture	Release of tens of kg of U. Clean up immediate area.	$130,000 [$100,000-$160,000]	0.050 [0.016-0.16]	$6,500 [$2,000-$21,000]
Waste Pond Release	7 x 10^5 lbs solids released. Stabilize pond and spill area and clean up spill.	$230,000 [$180,000-$290,000]	0.056 [0.029-0.22]	$13,000 [$4,600-$36,000]
Transportation	Small rupture of UF_6 cylinder. Hundred of kg of U released. Cleanup of area.	$400,000 [$320,000-$500,000]	0.0031 [0.0014-0.0082]	$1,200 [$500-$3,100]
Tornado	Thousands of kg U dispersed. Cleanup of 45° sector of downwind site area.	$1.9M [$1.5M-$2.4M]	0.0023 [0.00074-0.0074]	$4,400 [$1,400-$14,000]
			TOTAL FACILITY ECONOMIC RISK	$56,000 [$20,000-$109,000]

Table C.6 Summary of economic risk at a reference uranium fuel fabrication facility (Philbin et al. 1990, Table 4.3)

Incident Scenario	Consequence Description	Cleanup Cost [uncertainty]	Frequency per year [uncertainty]	Economic Risk (per year) [uncertainty]
Minor Facility Release	Release of hundreds of gms to tens of kg U. Confined to small areas in plant.	$3,500 [$2,800 - $4,400]	0.21 [0.15 - 0.32]	$740 [$470-$1,100]
Large Spills due to accidents or natural phenomena	800m³ waste solution, 24 Ci solids, 40000 m² surface contaminated.	$1.0M [$0.80M-$1.3M]	0.024 [0.015 - 0.044]	$24,000 [$13,000-$43,000]
Transportation accident	Trailer overturns; No contamination outside trailer.	$10,000 [$7,500 - 13,000]	0.0028 [0.0026 - 0.0030]	$28 [$22-$35]
Explosion	Rotary Kiln. Batch of 100 kg U, 1kg released to environment (outside), 1/3 of main building contaminated.	$3.9M [$3.1M - $4.9M]	0.01 [0.002 - 0.05]	$39,000 [$7,700-$200,000]
Major Fire	Decontamination of entire main building is required.	11M [$8.8M - $14M]	0.00021 [0.00012 - 0.00051]	$2,300 [$1,100-$4,900]
Criticality	10^{18} fissions; 8 hr duration. 1/3 of main building contaminated.	$3.9M [$2.9M - $4.9M]	0.0033 [0.00050 - 0.011]	$13,000 [$2,700-$61,000]
Major UF_6 Release	Rupture of one or two cylinders. Thousands of kg of U released. Major site contamination, 6 acres. Offsite cleanup is not expected.	$1.2M [$0.96M - $1.5M]	0.021 [0.011 - 0.081]	$25,000 [$9,100-$70,000]
			TOTAL FACILITY ECONOMIC RISK	$104,000 [$43,000-$250,000]

Table C.7 Summary of economic risk at a reference byproduct material manufacture/distribution facility (Philbin et al. 1990, Table 4.4)

Incident Scenario	Consequence Description	Cleanup Cost [uncertainty]	Frequency per year [uncertainty]	Economic Risk (per year) [uncertainty]
Minor Facility Releases	Small decontamination incident limited to the immediate area of the release.	$6500 [$5,200 - $8,100]	0.0022 [0.0015 - 0.0033]	$14 [$9 - $22]
Iodine-125 Spill Outside a Filtered Enclosure	Millicurie spill of NaI-125 an unfiltered area of laboratory. Laboratory decontamination required. No offsite cleanup required.	$30,000 [$24,000 - $38,000]	0.0022 [0.0015 - 0.0033]	$66 [$42 - $100]
Fire in a Fume Hood	Small fire involving molybdenum-99 generators in fume hood. Laboratory decontamination required. No offsite cleanup required.	$44,000 [$35,000- $55,000]	0.00059 [0.00034 - 0.0013]	$26 [$13 - $53]
Major Fire in an Iodine Laboratory	Fire in iodine-125 process-laboratory. Four curies volatilized and dispersed into two laboratories. 0.4 curies released to environment.	$290,000 [$230,000-$360,000]	0.00059 [0.00034 - 0.0013]	$170 [$84 - $350]
Waste Warehouse Fire (single drum)	Single waste drum fire. Several millicuries volatilized. Entire warehouse decontamination required.	$300,000 [$240,000-$380,000]	0.0081 [0.0074 - 0.0088]	$2,400 [$1,900 - $3,100]
Waste Warehouse Fire (multiple drums)	10% of waste inventory released in fire. Offsite decontamination required.	$1.1M [$0.9M - $1.4M]	0.0081 [0.0074 - 0.0088]	$8,900 [$7,000 - $11,000]
Tornado	Building 200 or 250 severely damaged or Bldg. 32 destroyed. 1% of in-process material released. 75% of waste inventory released.	$2M [$1.6M - $2.5M]	0.000030 [0.000009-0.00009]	$60 [$19 - $190]
Earthquake	Several buildings severely damaged. 1% of in-process material released.	$1.3M [$1.0M - $1.6M]	0.0040 [0.0010 - 0.020]	$5,200 [$1,100 - $24,000]
			TOTAL FACILITY ECONOMIC RISK	$17,000 [$8,600 - $31,000]

Table C.8 Summary of economic risk at a reference waste warehouse (Philbin et al. 1990, Table 4.5)

Incident Scenario	Consequence Description	Cleanup Cost [uncertainty]	Frequency per year [uncertainty]	Economic Risk (per year) [uncertainty]
Minor Facility Releases	Failure of one BLSV waste drum. Local decontamination.	$4000 [$3,200 - $5,000]	0.0041 [0.0022-0.016]	$16 [$6 - $45]
Waste Compactor Fire	Fire involving one drum of DAW waste. Local area decontamination.	$62,000 [$50,000-$78,000]	0.0081 [0.0074-0.0088]	$500 [$400 - $640]
Waste Drum Fire (single drum)	Fire consumes one BLSV waste drum. Entire warehouse decontamination required. No offsite cleanup required.	$410,000 [$330,000-$510,000]	0.0081 [0.0074-0.0088]	$3,300 [$2,600 - $4,200]
Transportation Accident	Highway accident (without fire -- 0.2 curies released, with fire -- 1 curie released) into two laboratories. 0.4 curies released to environment.	$40,000 [$32,000 - $50,000] $53,000 [$42,000 - $66,000]	0.0011 [0.00035-0.0035] 0.00024 [0.000076-0.00076]	$44 [$14 - $140] $13 [$4 - $41]
Facility Fire	Fire consumes ten percent of radiological inventory. Offsite decontamination required.	$1.2M [$0.9 M - $1.5M]	0.0081 [0.0074 - 0.0088]	$9,700 [$7,700-$12,000]
Tornado	Building destroyed. Seventy-five percent of waste inventory released.	$1.5M [$1.2M - $1.9M]	0.00020 [0.00006 - 0.0006]	$300 [$93 - $970]
			TOTAL FACILITY ECONOMIC RISK	$14,000 [$11,000-$16,000]

BLSV = bulk liquids and scintillation vials DAW = dry radioactive waste

Table C.9 Estimated 70-year population and worker exposures for repository construction (Daling et al. 1990, Table 4.2)

Geologic Medium	Worker Exposures (person-rem)	Maximum Individual Exposures (rem)	80-km Population Exposures (person-rem)
Salt	1.8E-1	2.8E-8	6.8E-3
Granite	5.0E+3	4.1E-4	1.0E+2
Basalt	6.2E+3	5.9E-5	1.5E+1
Shale	1.9E+3	1.5E-4	3.8E+1

Table C.10 Radiation exposure from normal construction and operation for repository preclosure period (Daling et al. 1990, Table 4.13)

Exposure Category	Estimated 50-yr Dose Commitment
Construction	
Maximally Exposed Individual	
-Annual	0.044 mrem
-50-yr	0.42 mrem
80-km Population	
-50-yr	2.0E+4 person-mrem
Operation	
Maximally Exposed Individual	
-Annual	0.17 mrem
-50-yr	5.6 mrem
80-km Population	
-50-yr	3.9E+5 man-mrem

Table C.11 Total radiological worker fatalities from construction and emplacement periods of three alternative Repository Sites (Daling et al. 1990, Table 4.20)

	Radiological Fatalities[a]			
Geologic Medium	Underground Construction	Underground Operations	Waste Handling Operations	Total
Salt	1.4E-2	4.4E-2	1.5E00	1.6E00
Tuff	7.7E-1	4.0E00	1.0E00	5.8E00
Basalt	1.6E00	5.4E00	1.9E00	8.9E00

(a) Based on 5-year construction and 26-year emplacement operations period.

Table C.12 Occupational dose during normal operation and from a shaft drop accident for repository preclosure period (Daling et al. 1990, Table 4.5)

Scenario	Number of Persons Involved	Average Annual Dose (rem/yr)	Total Dose (person-rem/yr)
Reference Case			
- Normal Operation	1,000	0.9	902
- Accident	300	1.5	454
Case 1			
- Normal Operation	1,068	1.2	1,295
Accident	352	1.6	569
Case 2			
- Normal Operation	1,045	1.1	1,188
- Accident	332	1.6	532
Case 3			
- Normal Operation	1,985	1.2	2,301
- Accident	603	1.6	978

Table C.13 Public dose during normal operation and from a shaft drop accident for repository preclosure period (Daling et al. 1990, Table 4.6)

Whole-body Dose Scenario	Public Dose (person-rem/yr)
Reference Case	
- Normal Operation	1.5E-5
- Accident	6.5E-2
Case 1	
- Normal Operation	5.0E-6
- Accident	5.6E-2
Case 2	
- Normal Operation	7.7E-6
- Accident	5.6E-2
Case 3	
- Normal Operation	1.1E-5
- Accident	5.6E-2

- Case 1. Simple encapsulation and disposal of spent fuel after storage at an away-from reactor storage facility (AFR) for 9 years.
- Case 2. Encapsulation of fuel, end fittings, and secondary wastes after chopping the fuel bundle and removal of volatile materials.
- Case 3. Encapsulation of fuel, end fittings, and secondary wastes after chopping, removal of volatile materials, calcination, and vitrification.

Table C.14 Summary of repository accident releases, frequencies, consequences, and risk values for repository preclosure period, operations phase (Daling et al. 1990, Table 4.11)

Accident Description	Release Quantity (Ci)	Frequency (per yr)	Consequences[a] (person-rem)	Risk Value (person-rem/yr)
Fuel truck crash into HLW area	H-3; 3 Cs-134; 300 Cs-137; 70	2.0E-6	2.0E+3	4.0E-3
Fuel truck crash into cladding waste area	FP[b]; 400 Actinides; 0.1	2.0E-6	2.0E00	4.0E-6
Fuel truck crash into NHLW area	Actinides; 100	2.0E-6	4.0E+1	8.0E-5
Aircrash into receiving area	H-3; 3 Cs-134; 300 Cs-137; 70 FP; 400 Actinides; 100	1.0E-7	4.0E+3	4.0E-4
Elevator drop	H-3; 4E-3 FP; 1E-2 Actinides; 4E-3	4.0E-8	5.0E-2	2.0E-9
Non-HLW pallet drop	Actinides; 0.02	5.0E-2	8.0E-1	4.0E-4
Final filter failure	Actinides; 0.2	3.0E-3	2.0E00	6.0E-3
	Total Preclosure Risk			1.0E-2

(a) Population doses are 50-year whole-body dose commitments.
(b) FP = Various fission products.

Table C.15 Radiation exposure from accidents for repository preclosure period, operations phase (Daling et al. 1990, Table 4.14)

Accident	Maximally Exposed Individual (mrem)	Population 50-yr Dose Commitment (person-mrem)
Spent Fuel Drop	4.68E+1	2.99E+3
Commercial HLW Drop	2.74E00	1.75E+2
Spent Fuel Handling	3.98E-2	1.29E+3
Remote TRU Drop	3.10E-3	1.98E-1
Contact TRU Puncture	2.07E-9	6.70E-5

TRU = transuranic HLW = high level waste NHLW = non-HLW

Table C.16 Occupational dose during repository operation (Daling et al. 1990, Table 4.15)

Activity	Number of Workers	Collective Dose (Person-rem/yr)
Receiving	35	44.8
Handling and Packaging	16	6.9
Surface Storage to Emplacement Horizon	14	6.0
Emplacement		
Vertical	18	12.4
Horizontal	7	8.7

Table C.17 Summary of annual occupational exposures for spent fuel and HLW operation at a tuff repository (Daling et al. 1990, Table 4.16)

Operation	Total Number of Workers	Total Annual Dose (person-rem/yr)
Receiving	35	44.6
Handling and Packaging	22	12.3
Transfer to Underground Facilities		
Shaft Access	9	3.35
Ramp Access	7	2.68
Emplacement in Boreholes		
Vertical	18	12.4
Horizontal	7	9.59
Retrieval from Boreholes		
Vertical	22	12.6
Horizontal	6	8.86
Return to Surface (Ramp)	5	2.68
Handling, Packaging, Shipping	17	20.48
Totals[a]		
Shaft Access/Vert. Empl.		72.68
Shaft Access/Horiz. Empl.		69.84
Ramp Access/Vert. Empl.		71.98
Ramp Access/Horiz. Empl.		69.17

(a) Totals do not include retrieval and loadout operations.

Table C.18 Estimated 50-year whole-body dose commitment to the public, maximally exposed individual workers from accidents for repository preclosure period, operations phase (Daling et al. 1990, Table 4.17)

Accident Scenario	Maximally Exposed Individual Dose (rem)	80 km Population Dose (person-rem)	Worker (person-rem)
Natural Phenomena			
Flood	2.8E-11	1.2E-9	5.0E-10
Earthquake	2.4E-4	3.1E-3	0.37
Tornado	2.4E-4	3.1E-3	0.37
Man-made Events			
Aircraft Impact	6.8E-2	110	5.5
Nuclear Test	2.4E-4	3.1E-3	0.37
Operational Accidents			
Fuel Assembly Drop	5.3E-6	8.0E-5	8.1E-3
Loading Dock Fire			
Spent Fuel	2.1E-2	6.8E-3	8.9E-3 - 3.5[a]
Commercial HLW	3.6E-3	9.2E-4	1.5E-3 - 0.6[a]
Waste Handling Ramp Fire	1.8E-7	3.6E-7	3.8E-8 - 64 [b]
Emplacement Drift Fire	1.8E-7	3.6E-7	3.8E-8 - 180[b]

(a) The first value represents the estimated dose to workers at the site surface and subsurface facilities; the second value is for the worker exposures at the loading dock.
(b) The first value is for the doses to workers in the surface facilities; the second value is for underground waste emplacement workers.

Table C.19 Preliminary risk estimates for postulated accidents at a repository in tuff for operations phase (Daling et al. 1990, Table 4.18)

Accident Scenario	Estimated Frequency (events/yr)	50-yr Dose Commitment (person-rem)	Population Risk (person-rem/yr)
Natural Phenomena			
Flood	1.0E-2	1.2E-9	1.2E-11
Earthquake	<1.3E-3	3.1E-3	<4.0E-6
Tornado	<9.1E-11	3.1E-3	<2.8E-13
Man-made Events			
Aircraft Impact	<2.0E-10	1.1E+2	<2.2E-8
Nuclear Test	<1.0E-3	3.1E-3	<3.1E-6
Operational accidents			
Fuel Assembly Drop	1.0E-1	8.0E-5	8.0E-6
Loading Dock Fire			
Spent Fuel	<1.0E-7	6.8E-3	<6.8E-10
Commercial HLW	<1.0E-7	9.2E-4	<9.2E-11
Waste Handling Ramp Fire	<1.0E-7	4.8E-7	<4.8E-14
Emplacement Drift Fire	<1.0E-7	4.8E-7	<4.8E-14
Total			1.5E-5

Table C.20 Frequencies and consequences of accident scenarios projected to result in offsite doses greater than 0.05 rem for repository preclosure period, operations phase (Daling et al. 1990, Table 4.23)

Accident Scenario Description	Frequency, per year	Consequence mrem
Internally Initiated Events		
Crane drops shipping cask, cask breached	5E-6	340
Crane drops fuel assembly in hot cell, HVAC fails	1E-8	170
Crane drops open consolidated fuel container, HVAC fails	1E-9	1100
Container dropped in storage vault, filtration system fails to activate	3E-8	230
Externally Initiated Events (all caused by earthquake)		
Crane fails, falls on or drops cask in receiving area	5E-8	340
Train falls on cask	5E-8	290
Structural object falls on fuel in cask unloading cell	5E-7	110
Crane fails, falls on or drops fuel in cask unloading cell	1E-6	110
Structural object falls on fuel in consolidation cell	5E-7	110
Crane fails, falls on or drops fuel in consolidation cell	1E-6	110
Structural object falls on fuel in packaging cell	5E-7	330
Crane fails, falls on or drops fuel in packaging cell, HVAC fails	1E-6	1100
Structural object falls on fuel in transfer tunnel	5E-7	200

HVAC = heating, ventilation, air conditioning

Table C.21 Occupational dose during normal operation and from accidents during decommissioning and retrieval phases of a repository (Daling et al. 1990, Table 4.7)

Scenario	Annual Dose (person-rem/yr) Decommissioning	Retrieval[a]
Reference Case		
- Normal Operation	6	163
- Accident	5	89
Case 1		
- Normal Operation	23	588
- Accident	16	254
Case 2		
- Normal Operation	22	487
- Accident	15	215
Case 3		
- Normal Operation	40	1,116
- Accident	28	491

(a) Represents sum of doses from waste removal, offgas recovery and release, and mining and drilling activities.

- Case 1. Simple encapsulation and disposal of spent fuel after storage at an away-from reactor storage facility (AFR) for 9 years.
- Case 2. Encapsulation of fuel, end fittings, and secondary wastes after chopping the fuel bundle and removal of volatile materials.
- Case 3. Encapsulation of fuel, end fittings, and secondary wastes after chopping, removal of volatile materials, calcination, and vitrification.

Table C.22 Comparison of normalized public accident risk values from various studies for repository preclosure period (Daling et al. 1990, Table 4.27)

Document	Risk (person-rem/MTU)	Comment
GEIS	8.4E-9	One accident
Bechtel (1979)	1.1E-10	One accident
Waite et al. (1986)	1.7E-8	Five accidents
Jackson et al. (1984)	5.7E-9	Ten accidents
Erdmann et al (1979)	1.8E-6	Seven accidents
Pepping et al. (1981)	6.3E-10	One accident

Table C.23 1985 Revised EPA estimates of 10,000-year health effects for 100,000-MTHM repositories in basalt, bedded salt, tuff, and granite (Daling et al. 1990, Table 4.29)

Scenario	Basalt	Bedded Salt[a]	Tuff	Granite
Undisturbed	97	0	0	184
Drilling (misses canister)	2.30	3.16	0	0.92
Drilling (hits canister)	1.73	3.41	0.44	0.44
Faulting	24.4	0	3.00	8.49
Total Health Effects	125	6.57	3.44	194

(a) Palo Duro Basin

Table C.24 70-year cumulative maximally exposed individual and regional population doses for the two peak dose periods for a tuff repository (Daling et al. 1990, Table 4.35)

Organ	Accumulated Dose at the 27,000-Year Peak	Accumulated Dose at the 250,000-Year Peak
Total Body	0.2	0.2
Bone	0.6	3.0
Thyroid	2.0	2.0
Gastro-intestinal	4.0	2.0

Lifetime Population Doses from the Drinking Water Scenario for Two Future Times (person-rem)

Organ	Accumulated Dose at 27,000 Years	Accumulated Dose at 250,000 Years
Total Body	2.0	200
Bone	4.0	4,000
Thyroid	600	600
Gastro-intestinal	200	400

Table C.25 Peak conditional cancer risks due to ingestion for the 100,000-year postclosure period for a 90,000-MTU spent fuel repository in bedded salt (Daling et al. 1990, Table 4.38)

Scenario (Number) And Description	Zone 1: Area From Repository to River 40 km Away, Plus 6 km Along River	Zone 2: Area Bounded by a 40-km Stretch of River and 2 km Along Both Sides
(1) Borehole(s) with Lower Aquifer Wells	8.0E-2	8.0E-7
(2) U-Tube with Upper Aquifer Wells	2.0E-1	4.0E-6
(3) Dissolution Cavity with Wells	3.0E-1	7.0E-6
(4) Borehole(s)	1.0E-6	1.0E-6
(5) U-Tube	2.0E-6	1.0E-6
(6) Borehole(s) intersecting a Canister	3.0E-6	2.0E-6

Table C.26 Radiation exposures from routine operations at the MRS facility (Daling et al. 1990, Table 4.42)

Pathway and Location in the Body	50-Year Dose Commitment from Annual Release: Maximally Exposed Individual (rem)	50-Year Dose Commitment from Annual Release: Population (person-rem)
Total Body	2.4×10^{-4}	2×10^{1}
Bone	3.0×10^{-6}	1×10^{-1}
Lungs	2.4×10^{-4}	2×10^{1}
Thyroid	1.3×10^{-3}	1×10^{2}

Table C.27 Radiological impacts of potential MRS facility accidents for sealed storage cask at the Clinch River Site for operations phase (Daling et al. 1990, Table 4.43)

Accident	Location in the body	50-Year Dose Commitment to the Public: Maximally Exposed Individual (rem)	50-Year Dose Commitment to the Public: Population (person-rem)
Fuel Assembly Drop	Total Body	4.4×10^{-3}	3×10^{-2}
	Bone	1.4×10^{-4}	7×10^{-3}
	Lungs	4.6×10^{-3}	3×10^{-2}
	Thyroid	2.9×10^{-2}	2×10^{-1}
Shipping Cask Drop	Total Body	9.1×10^{-4}	6×10^{-3}
	Bone	3.0×10^{-5}	1×10^{-3}
	Lungs	9.6×10^{-4}	6×10^{-3}
	Thyroid	6.0×10^{-3}	3×10^{-2}
Storage Cask Drop	Total Body	8.9×10^{-4}	6×10^{-3}
	Bone	2.9×10^{-5}	1×10^{-3}
	Lungs	9.3×10^{-4}	6×10^{-3}
	Thyroid	5.9×10^{-3}	3×10^{-2}

Table C.28 Occupational dose from MRS facility operations (Daling et al. 1990, Table 4.44)

Operation	Unit Occupational (person-rem/1,000 MTU)
Receipt and Unloading	58
Consolidation	6
Loading Consolidated Fuel Rods	9
Maintenance/Monitoring	2
Emplacement and Retrieval	20
Total	95

Table C.29 Summary of occupational doses from MRS facility operations (Daling et al. 1990, Table 4.49)

Operation	(person-rem/yr)
Receipt, Inspection, Unloading	148.0
Transfer to Storage Casks	6.2
Emplacement in Storage Area	7.2
Surveillance in Storage Area	5.3
Retrieval from Storage Area	7.1
Transfer to Process Cells	4.0
Shipment to Repository	140.9
Total	318.7

Table C.30 Occupational dose estimates for selected MRS operations (Daling et al. 1990, Table 4.50)

Operation	Occupational Dose (person-mrem/1,000MTU)
Consolidate and package fuel	3.6
Consolidate and package non-fuel components	1.1
Receiving and unloading - Truck	135
- Rail	25

Table C.31 Summary of MRS drywell risk analysis for operations phase (Daling et al. 1990, Tables 4.45 and 4.46)

	Frequency Per Year	Release Category	Latent Cancer Fatalities	Risk
Transporter collision during emplacement				
- no fire	1.7E-8	III	3.4E-5	5.8E-11
- fire	6.1E-7	IV	1.9E-3	1.2E-9
Transporter collision during retrieval				
- no pin failure; no fire	8.9E-3	II	5.9E-7	5.3E-9
- pin failure; no fire	2.8E-2	III	3.8E-5	1.1E-6
- no pin failure; fire	1.4E-4	IV	2.6E-6	3.6E-12
- pin failure; fire	1.4E-4	IV	2.6E-4	3.6E-8
Transporter motion with canister partially in place				
- emplacement	8.6E-2	V	1.8E-2	1.5E-2
- retrieval; no pin failure	8.9E-3	II	5.9E-7	5.3E-9
- retrieval; pin failure	1.4E-1	V	1.6E-3	2.2E-4
Canister drop - emplacement	1.7E-8	I	3.9E-6	6.6E-14
Canister drop - retrieval	1.1E-2	I	9.9E-7	1.1E-8
Plane crash; no fire	4.0E-10	V	2.6E-1	1.0E-10
Plane crash; fire	7.4E-9	VI	1.3E+0	9.6E-9
Earthquake; no pin failure	4.8E-9	II	6.1E-2	2.9E-10
Earthquake; pin failure	4.3E-8	II	3.3E+0	1.4E-7
Total				1.7E-3

Release Category	Release Type (Generic Event)	Assumed Damage Per Canister Involved In Event	Fraction Release of Radionuclides to Environment	
I	Filtered gap release (canister impact in the interface areas)	Gap inventory from 10% pins released through filters	Gases:[a] I:	3.0E-2 3.0E-4
II	Limited gap release (canister leak)	Gap inventory from 1% pins (assumed to develop leaks while in storage) released via leaks and exit channels	Gases: I:	3.0E-3 5.0E-4
III	Unlimited gap release (canister impact in storage areas)	Complete gap inventory from 10% pins	Gases: I:	3.0E-2 3.0E-2
IV	Elevated temperature release (temporary loss of cooling)	Complete inventory of gases and I and 1% of volatiles released via leaks and exit channels	Gases: I: Cs, Ru:	1.0E+0 1.7E-1 1.0E-4
V	Exposed fuel release (severe canister impact)	10% of fuel exposed releasing gap inventory, volatiles, and particulates. Remainder releases gap inventory via leaks and exit channels	Gases: I: Cs, Ru: Particles:	3.0E-1 6.0E-1 1.0E-3 1.5E-6
VI	Exposed heated-fuel release (severe canister impact with fire)	As in V, with increased releases	Gases: I: Cs, Ru: Particles:	1.0E+0 2.0E-1 5.1E-3 3.0E-6

(a) Gases include C-14, H-3, and Kr-85.

Table C.32 Summary of results of MRS operations phase (Daling et al. 1990, Table 4.48)

Accident Scenario	Frequency (events/yr)	Number of Assemblies	Release Category	Consequence (LCF)	Risk (LCF/yr)
Fuel Assembly Drop During Loading	1E-1	1	1	4E-5	4E-6
Drop of Transport Cask During Loading					
Cask	4E-3	10	1	4E-4	2E-6
Drywell	7E-2	10	1	4E-4	3E-5
Venting of Cask During Transport					
Cask	2E-3	24	2	1E-1	2E-4
Drywell	3E-2	1	2	4E-3	1E-4
Collision During Transport					
Cask	2E-4	24	3	1E-1	2E-5
Drywell	2E-5	1	3	4E-3	8E-8
Collision with Fire During Transport					
Cask	2E-6	24	5	5E-1	1E-6
Drywell	2E-7	1	5	2E-2	4E-9
Canister Drop During Emplacement					
Drywell	1E-6	1	3	4E-3	4E-9
Canister Shear During Emplacement					
Drywell	2E-6	1	3	4E-3	8E-9
Cask Drop During Emplacement					
Cask	1E-5	24	3	1E-1	1E-6
Tornado Missile Penetration					
Cask	6E-6	10	3	4E-2	2E-7
Drywell	1E-4	10	3	4E-2	4E-6
Plane Crash Topples Cask with Fire					
Cask	6E-9	24	5	5E-1	3E-9
Plane Crash Plus Fire					
Cask	9E-9	24	5	5E-1	4E-9
Drywell	2E-7	1	5	2E-2	4E-9
	2E-8	10	5	2E-1	4E-9
Earthquake					
Cask	4E-6	24	3	1E-1	4E-7
	4E-8	2400	3	1E+1	4E-7
Drywell	8E-6	1	3	4E-3	3E-8
	8E-7	10	3	4E-2	3E-8
	2E-8	2400	3	2.4	5E-8
	Total Risk:	Cask		2.3E-4	
		Drywell		1.4E-4	

LCF = latent cancer fatality

Table C.33 Projected maximum individual exposures from normal spent fuel transport by truck cask[a] (Daling et al. 1990, Table 4.61)

(Service or Activity)	Distance to Center of Cask	Exposure Time	Maximum Dose Rate and Total Dose
Caravan			
Passengers in vehicles traveling in adjacent lanes in the same direction as cask vehicle	10 m	30 min	40 µrem/min 1 mrem
Traffic Obstruction			
Passengers in stopped vehicles in lanes adjacent to the cask vehicle which have stopped due to traffic obstruction	5 m	30 min	100 µrem/min 3 mrem
Residents and Pedestrians			
Slow transit (due to traffic control devices through area with pedestrians)	6 m	6 min	70 µrem/min 0.4 mrem
Truck stop for driver's rest. Exposures to residents and passers-by.	40 m	8 hours (assumes overnight)	6 µrem/min 3 mrem
Slow transit through area with residents (homes, businesses, etc.)	15 m	6 min	20 µrem/min 0.1 mrem
Truck Servicing			
Refueling (100 gallon capacity)	7 m (at tank)		60 µrem/min
- 1 nozzle from 1 pump - 2 nozzles from 1 pump		40 min 20 min	2 mrem 1 mrem
Load inspection/enforcement	3 m (near personnel barrier)	12 min	160 µrem/min 2 mrem
Tire change or repair to cask trailer	5 m (inside tire nearest cask)	50 min	100 µrem/min 5 mrem
State weight scales	5 m	2 min	80 µrem/min 0.2 mrem

(a) These exposures should not be multiplied by the expected number of shipments to a repository in an attempt to calculate total exposures to an individual; the same person would probably not be exposed for every shipment, nor would these maximum exposure circumstances necessarily arise during every shipment.

Table C.34 Projected maximum individual exposures from normal spent fuel transport by rail cask[a] (Daling et al. 1990, Table 4.62)

(Service or Activity)	Distance to Center of Cask	Exposure Time	Maximum Dose Rate and Total Dose
Caravan			
Passengers in rail cars or highway vehicles traveling in same direction and vicinity as cask vehicle	20 m	10 min	30 µrem/min 0.3 mrem
Traffic Obstruction			
Exposures to persons in vicinity of stopped/slowed cask vehicle due to rail traffic obstruction	6 m	25 min	100 µrem/min 2 mrem
Residents and Pedestrians			
Slow transit (through station or due to traffic control devices) through area with pedestrians	8 m	10 min	70 µrem/min 0.7 mrem
Slow transit through area with residents (homes, businesses, etc.)	20 m	10 min	30 µrem/min 0.3 mrem
Train stop for crew's personal needs (food, crew change, first aid, etc.)	50 m	2 hours	5 µrem/min 0.6 mrem
Train Servicing			
Engine refueling, car changes, train maintenance, etc.	10 m 6 mrem	2 hours	50 µrem/min
Cask inspection/enforcement by train, state or federal officials	3 m	10 min	200 mrem 2 mrem
Cask car coupler inspection/maintenance	9 m	20 min	70 µrem/min 1 mrem
Axle, wheel or brake inspection/lubrication/maintenance on cask car	7 m	30 min	90 µrem/min 3 mrem

(a) These exposures should not be multiplied by the expected number of shipments to a repository in an attempt to calculate total exposures to an individual; the same person would probably not be exposed for every shipment, nor would these maximum exposure circumstances necessarily arise during every shipment.

Table C.35 Summary of results from the NRC for spent fuel shipments (Daling et al. 1990, Table 4.54)

Year	Mode	Shipments Per Year	Normal Population Dose, (person-rem/yr)	Accident Risk, Latent Cancer (fatalities/yr)
1975	Truck	254	93.80	0.047
	Rail	17	7.78	0.021
1985	Truck	1,530	565.0	0.29
	Rail	652	298.0	0.8

Table C.36 Maximum individual radiation dose estimates for rail cask accidents during spent fuel transportation (Daling et al. 1990, Table 4.63)

	Dose (mrem)[a]		
Accident Class	Inhalation	Plume Gamma	Ground Gamma
Impact	179	10.7	12.3
Impact and Burst	6,130	71.1	90.9
Impact, Burst and Oxidation	8,950	547	707

(a) The maximally exposed individual dose occurs about 70 meters downwind of the release point and assumes that the individual remains at this location for the duration of the passage of the plume of nuclides that are released.

Table C.37 50-year population dose estimates for spent fuel rail cask accidents with no cleanup of deposited nuclides[a] (Daling et al. 1990, Table 4.64)

	Urban Area (3,860 people/km^2)				Rural Area (6 people/km^2)			
Accident Class	Inhalation	Plume Gamma	Ground Gamma	Total	Inhalation	Plume Gamma	Ground Gamma	Total
Impact								
Dose (person-rem)	3.09	0.33	936	939	0.005	0.0005	1.45	1.45
Latent Health Effects[b]				0.19				0.00029
Impact and Burst								
Dose (person-rem)	106	2.23	13,400	13,500	0.16	0.0034	20.8	21
Latent Health Effects[b]				2.7				0.0042
Impact, Burst and Oxidation								
Dose (person-rem)	154	17.2	112,000	112,000	0.24	0.27	174	174
LHE[b]				22				

(a) The ground gamma dose is what would be received if each member of the population stayed at the same location for 50 years. The inhalation dose is a 50-year dose commitment from inhalation of the passing plume. Doses are for the population within 80 kilometers of the release point. It is assumed that there is no cleanup of deposited nuclides and that no other measures are used to reduce radiation exposures.

(b) Based on 1 person-rem = $2.0E^{-4}$ LHEs. An LHE is defined here as an early cancer death by an exposed person or a serious genetic health problem in the two generations after those exposed. About half of the LHEs are expected to be cancers and the rest genetic health problems.

LHE = latent health effect

Table C.38 Population radiation exposure from water ingestion for severe but credible spent fuel rail cask accidents (Daling et al. 1990, Table 4.65)

Accident Class	Total Release from Rail Cask (Ci)[a]	Population Dose Effects from Water Ingestion
Impact	8.07	182 person-rem 0.036 LHE[b]
Impact and Burst	153	6870 person-rem 1.4 LHE[b]
Impact, Burst	1379	63,000 person-rem 12.6 LHE[b]

(a) The noble gas Kr-85 is omitted because of its negligible uptake by a surface water body.
(b) LHE estimates are based upon 1 person-rem = 2.0E-4 LHE.

Table C.39 Summary of spent fuel truck and rail transportation risks (Daling et al. 1990, Table 4.58)

Model/Fuel Age	Annual Quantity Shipped, (MTU/yr)	Average Shipping Distance, (km)	Number of (shipments/yr)	Probability of One or More (LHE/yr)
Truck				
180-day	380	690	885	2.2E-5
4-yr	380	690	885	3.6E-6
Rail				
180-day	1,474	912	471	5.5E-5
4-yr	1,474	912	471	8.3E-7

Table C.40 Summary of the routine transportation risks for the waste management system without an MRS facility (Daling et al. 1990, Table 4.59)

Mode	Repository Location: Deaf Smith	Yucca Mt.	Hanford
100% Truck from origin SF to Repository			
Radiological[a]	6.2	9.2	10
Nonradiological[b]	18	29	31
HLW to Repository			
Radiological	1.7	2.1	2.1
Nonradiological	6.2	7.4	7.4
100% Rail from origin SF to Repository			
Radiological	0.18	0.24	0.25
Nonradiological	1.0	1.6	1.6
HLW to Repository			
Radiological	0.063	0.079	0.074
Nonradiological	0.64	0.84	0.79
TOTALS			
Truck from origin			
Radiological	7.9	11	12
Nonradiological	24	36	38
Rail from origin			
Radiological	0.24	0.32	0.32
Nonradiological	1.6	2.4	2.4

(a) Radiological health effects include lethal cancer fatalities and genetic effects in all generations.
(b) Nonradiological fatalities.

SF = spent fuel

Table C.41 Summary of the routine transportation risks for the waste management system with an MRS facility (Daling et al. 1990, Table 4.60)

Mode	Repository Location		
	Deaf Smith	Yucca Mt.	Hanford
100% Truck from origin SF to MRS			
Radiological[a]	3.6	3.6	3.6
Nonradiological[b]	9.1	9.1	9.1
HLW to Repository by Truck			
Radiological	1.7	2.1	2.1
Nonradiological	6.2	7.4	7.4
100% Rail from origin SF to MRS			
Radiological	0.14	0.14	0.14
Nonradiological	0.92	0.92	0.92
HLW to Repository by Rail			
Radiological	0.063	0.079	0.074
Nonradiological	0.64	0.84	0.79
150T Rail from MRS			
Radiological	0.035	0.054	0.042
Nonradiological	3.8	1.0	6.1
TOTALS			
Truck from origin, 150T Rail from MRS			
Radiological	5.3	5.8	5.7
Nonradiological	19	18[c]	23
Rail from origin, 150T Rail from MRS			
Radiological	0.24	0.27	0.26
Nonradiological	5.3	12	7.8

(a) Radiological health effects include lethal cancer fatalities and genetic effects in all generations.
(b) Nonradiological fatalities
(c) An error was found in the source document. The value in this table is believed to be correct.

Table C.42 Aggregated public risks for the preclosure phases of the waste management system without an MRS Facility[a] (Daling et al. 1990, Table 5.11)

System Element Operating Phase	Radiological Risks[b] (LHE/yr) Accidents	Radiological Risks[b] (LHE/yr) Routine Operations	Nonradiological Risks Accidents (fatalities/yr)	Nonradiological Risks Routine (health effects/yr)
Repository Preclosure				
Construction	N/A	1E-5	(c)	Negligible
Operations	6E-9	9E-4	(c)	Negligible
Decommissioning	Information Not Available	2E-11	(c)	Negligible
Transportation System[d]				
Operations	1E-3	9E-2	3E-1	1E-2
Total Aggregated Risks (For Facility Operating Phases Only)	1E-3	9E-2	3E-1	1E-2

(a) Risks for the facility operations phase are annual risks for a fully functioning waste management system operating at a 3,000 MTU/yr throughput rate. Risks for other facility phases are levelized annual risks prorated over the number of years required for the specific phase.
(b) Health effects include latent cancer fatalities plus first and second generation genetic effects.
(c) There are not expected to be site-related public nonradiological fatalities. Traffic-related public fatalities are included with traffic-related worker fatalities in Table 5.12.
(d) Shipping modes are as follows: spent fuel, 30% truck and 70% rail; HLW, 100% rail.

Table C.43 Aggregated occupational risks for the preclosure phases of the waste management system without an MRS facility[a] (Daling et al. 1990, Table 5.12)

System Element Operating Phase	Radiological Risks[b] (LHE/yr) Accidents	Radiological Risks[b] (LHE/yr) Routine Operations	Nonradiological Risks Accidents (fatalities/yr)	Nonradiological Risks Operations (health effects/yr)
Repository Preclosure Construction	N/A	1E-1	2E+0	No Significant Impact
Operations	6E-5	2E-2	3E+0	No Significant Impact
Decommissioning	Information Not Available	3E-2	8E-1	No Significant Impact
Transportation System[c] Operations	Included With Public Risks	2E-2	8E-2	Information Not Available
Total Aggregated Risks (For Facility Operating Phases Only)[c]	6E-5	4E-2	3E+0	Information Not Available

(a) Risks for the facility operations phase are annual risks for a fully functioning waste management system operating at a 3,000 MTU/yr throughput rate. Risks for other facility phases are levelized annual risks prorated over the number of years required for the specific phase.
(b) Health effects include latent cancer fatalities plus first and second generation genetic effects.
(c) Shipping modes are as follows: spent fuel, 30% truck and 70% rail; HLW, 100% rail.

Table C.44 Aggregated public risks for the preclosure phases of the waste management system with an MRS facility[a] (Daling et al. 1990, Table 5.13)

System Element Operating Phase	Radiological Risks[b] (LHE/yr) Accidents	Radiological Risks[b] (LHE/yr) Routine Operations	Nonradiological Risks Accidents (fatalities/yr)	Nonradiological Risks Routine (health effects/yr)
Repository Preclosure				
Construction	N/A	1E-5	(c)	Negligible
Operations	6E-9	8E-7	(c)	Negligible
Decommissioning	Information Not Available	2E-11	(c)	Negligible
MRS Facility				
Construction	No Radioactive Materials Onsite		(c)	No Significant Impacts
Operations	8E-7	5E-3		
Decommissioning	Not Evaluated	2E-11		
Transportation System Operations[d]	2E-3	3E-2	4E-1	8E-3
Total Aggregated Risks (For Facility Operating Phases Only)[c]	2E-3	4E-2	4E-1	8E-3

(a) Risks for the facility operations phase are annual risks for a fully functioning waste management system operating at a 3,000 MTU/yr throughput rate. Risks for other facility phases are levelized annual risks prorated over the number of years required for the specific phase.
(b) Health effects include latent cancer fatalities plus first and second generation genetic effects.
(c) There are not expected to be site-related public nonradiological fatalities. Traffic-related public fatalities are included with traffic-related worker fatalities in Table 5.14.
(d) Shipping modes are as follows: spent fuel from reactors to MRS, 30% truck and 70% rail; HLW, 100% rail; all wastes from MRS facility to repository, 100% rail.

Table C.45 Aggregated occupational risks for the preclosure phases of the waste management system with an MRS facility[a] (Daling et al. 1990, Table 5.14)

System Element Operating Phase	Radiological Risks[b] (LHE/yr) Accidents	Radiological Risks[b] (LHE/yr) Routine Operations	Nonradiological Risks Accidents (fatalities/yr)	Nonradiological Risks Routine (health effects/yr)
Repository Preclosure				
Construction	N/A	1E-1	2E+0	No Significant Impacts
Operations	5E-5	2E-2	2E+0	No Significant Impacts
Decommissioning	Information Not Available	3E-2	7E-1	No Significant Impacts
MRS Facility				
Construction	No Radioactive Materials Onsite		2E+0	No Significant Impacts
Operations	1E-4	6E-2	2E+0	No Significant Impacts
Decommissioning	3E-3	5E-3	1E-1	No Significant Impacts
Transportation System[c]	Included With Public Risks	8E-3	4E-2	Information Not Available
Total Aggregated Risks (For Facility Operating Phases Only)[c]	2E-4	9E-2	4E+0	Information Not Available

(a) Risks for the facility operations phase are annual risks for a fully functioning waste management system operating at a 3,000 MTU/yr throughput rate. Risks for other facility phases are levelized annual risks prorated over the number of years required for the specific phase.
(b) Health effects include latent cancer fatalities plus first and second generation genetic effects.
(c) Shipping modes are as follows: spent fuel from reactors to MRS, 30% truck and 70% rail; HLW, 100% rail; all wastes from the MRS to the repository, 100% rail.

Table C.46 Total preclosure life-cycle risk[a] estimates for the waste management system[b] (Daling et al. 1990, Table 5.15)

Population Group	Radiological Risks (LHE) Accidents	Radiological Risks (LHE) Routine	Nonradiological Fatalities[c]
Public Risks	0.04	2	10
Occupational Risks	0.004	3	100

(a) Sum of risks during construction, operation, and decommissioning phases of the waste management system.
(b) Average life-cycle risks with respect to system configurations with and without an MRS facility.
(c) Sum of nonradiological accident and routine risks.

Table C.47 Summary of annual and total life-cycle risk estimates for the waste management system[a] (Daling et al. 1990, Table S.2)

Risk Category	Operating Phase[b,c] Annual Risks	Total Life-[c,d] Cycle Risks
Public Risks		
- Radiological Accidents[e]	0.001	0.04
- Radiological Routine[e]	0.06	2
- Nonradiological[f]	0.4	10
- Postclosure Radiological[g]	0.001	--Not calculated--
Occupational Risks		
- Radiological Accidents[e]	0.0001	0.004
- Radiological Routine[e]	0.06	3
- Nonradiological[f]	0.4	100
Risk Perspective		
- Natural Background Radiation[h]	60	2000

(a) Average for waste management system configurations with and without an MRS facility.
(b) Annual risks from facility operating phases only. Does not include construction, decommissioning, and repository retrieval risks.
(c) Based on 30% truck/70% rail shipments from reactors, 100% rail from the MRS facility (where applicable), and 100% rail shipments from high-level waste (HLW) generators.
(d) Risks associated with spent fuel storage at reactor and other commercial sites are not included on the total life-cycle risk estimates.
(e) Annual radiological risks are given in units of latent health effects per year (LHE/yr); total life-cycle risks are given in units of LHEs.
(f) Annual nonradiological risks are given in units of fatalities/yr; total life-cycle nonradiological risks are given in units of fatalities.
(g) Peak annual radiological health effects from routine releases and selected disruptive events.
(h) Based on the estimated latent health effects from the population dose from natural background radiation within 80 km of the repository and MRS sites and within 0.5 km of a highway or railroad.

Table C.48 Accident frequencies and population doses for milling in the nuclear fuel cycle (Cohen and Dance 1975)

Accident	Frequency (per plant year)	Population Dose for Reference Plant (person-rem total body)
Fire in solvent extraction circuit	4E-4 to 3E-3	1.0E-1
Release of tailings slurry from tailings pond	4E-2	1.9E-1
Release of tailings slurry from tailings distribution pipeline	1E-2	8.3E-3

A key assumption is that 1% of the solvent extraction inventory is dispersed during a fire. Study limitations include the small number of accident

Table C.49 Accident frequencies and population doses for conversion in the nuclear fuel cycle (Cohen and Dance 1975)

Accident	Frequency (per plant year)	Population Dose for Reference Plant (person-rem total body)
Uranyl nitrate evaporator explosion	1E-4 to 1E-3	4.0
Hydrogen explosion in reduction	1E-3 to 5E-2	4.0
Fire in solvent extraction operation	4E-4	3.9E-1
Release from a hot UF_6 cylinder	3E-2	4.3E-1
Valve rupture in distillation step	5E-2	1.6E-1
Release of raffinate from waste retention pond	2E-2	3.1E-1

Table C.50 Accident frequencies and population doses for enrichment in the nuclear fuel cycle (Cohen and Dance 1975)

Accident	Frequency (per plant year)	Population Dose for Reference Plant (person-rem total body)
Catastrophic fire	4E-4 to 3E-2	4.9
Release from a hot UF_6 cylinder	4E-1	7.5E-1
Leaks or failure of valves and piping	1.8	7.7E-3
Criticality	8E-5	1.2E-2

Table C.51 Accident frequencies and population doses for fuel fabrication in the nuclear fuel cycle (Cohen and Dance 1975)

Accident	Frequency (per plant year)	Population Dose for Reference Plant (person-rem total body)
Hydrogen explosion in reduction furnace	2E-3 to 5E-2	7.4E-5 to 7.4E-2
Major facility fire	2E-4	7.4E-2 to 7.4E1
Fire in a roughing filter	1E-2	1.8E-5 to 1.8E-2
Release from a hot UF_6 cylinder	3E-2	7.8E-3 to 7.8
Failure of valves and piping	4E-3	2.2E-3 to 2.2
Criticality	8E-4	1.1
Waste Retention Pond Failure	2E-3 to 2E-2	3.5E-2

Table C.52 MOX fuel refabrication radiological accident risk

Study	Expected Population Dose (person-rem/GW_e-year)	Dominant Risk Contributor
Cohen and Dance (1975)	1.2E-2 to 1.9E-2 (total body)	Disolver fire in scrap recovery combined with HEPA failure.
Erdman et al. (1979)	4.0E-2 (total body)	Greater than design basis earthquake.
Fullwood and Jackson (1980)	4.0E-7 (total body)	Criticality in wet scrap.

Table C.53 Accident frequencies and population doses for MOX fuel refabrication in the nuclear fuel cycle (Cohen and Dance 1975)[3]

Accident	Frequency (per plant year)	Population Dose for Reference Plant (person-rem total body)
Explosion in oxidation-reduction scrap furnace		
Normal HEPA filtration	2E-3 to 5E-2	3.1E-2
HEPA filter failure	2E-6 to 5E-5	3.1E3
Major facility fire		
Normal HEPA filtration	2E-4	1.6
HEPA filter failure	2E-7	1.4E5
Fire in waste compaction glove box		
Normal HEPA filtration	1E-2	3.1E-3
HEPA filter failure	1E-5	3.1E2
Ion-exchange resin fire		
Normal HEPA filtration	1E-4 to 1E-1	9.2E-3
HEPA filter failure	1E-7 to 1E-4	9.2E2
Dissolver fire in scrap recovery		
Normal HEPA filtration	1E-2	1.6E-1
HEPA filter failure	1E-5	1.6E4
Glove failure		
Normal HEPA filtration	1	1.3E-5
HEPA filter failure	1E-3	1.3
Severe glove box damage		
Normal HEPA filtration	1E-2	6.1E-2
HEPA filter failure	1E-5	6.1E3
Criticality		
Normal HEPA filtration	3E-5 to 8E-3	3.8E-1
HEPA filter failure	3E-8 to 8E-6	4.2E2

HEPA = high efficiency particulate air

Table C.54 Accident frequencies and population doses for MOX fuel refabrication in the nuclear fuel cycle (Erdmann et al. 1979)

Accident	Frequency (per plant year)	Population Dose for Reference Plant (person-rem total body)
Greater than design basis earthquake	5E-6	1E5
Aircraft crash	3E-7	3E4
Hydrogen explosion in ROR reactor	1E-3	5E-9
Hydrogen explosion in sintering furnace	1E-3	2E-7
Ion exchange resin fire	5E-4	2E-9
Dissolver explosion wet scrap recovery	5E-3	2E-6
Loaded final filter failure	2E-4	3E-1
Criticality	6E-5	5

Table C.55 Accident frequencies and population doses for MOX fuel refabrication in the nuclear fuel cycle (Fullwood and Jackson 1980)

Accident	Frequency (per plant year)	Population Dose for Reference Plant (person-rem total body)
Aircraft crash	1.5E-9	5E2
Hydrogen explosion in ROR	5E-3	1.1E-11
Hydrogen explosion in sintering	5E-3	4E-10
Hydrogen explosion in wet scrap	3E-4	1.1E-11
Criticality in wet scrap	6E-5	2
Powder shipping container spill	3E-5	1.1E-11
Exothermic reactions in powder storage	1.5E-6	1E-10

Table C.56 Fuel reprocessing radiological accident risk

Study	Expected Population Dose (person-rem/GW_e-year)	Dominant Risk Contributor
Cohen and Dance (1975)	2.8E-3 to 6.3E-3 (total body)	Fuel assembly rupture combined with HEPA failure.
Erdman et al. (1979)	2.0E-4 (total body)	Krypton cylinder failure; explosion in HLW calciner.
Fullwood and Jackson (1980)	7.0E-5 (total body)	Krypton cylinder failure.

ROR = reduction-oxidation reactor

Table C.57 Accident frequencies and population doses for reprocessing in the nuclear fuel cycle (Cohen and Dance 1975)[4]

Accident	Frequency (per plant year)	Population Dose for Reference Plant (person-rem total body)
Explosion in HAW concentration		
Normal HEPA	1E-5	4.3E2
Failed HEPA	1E-8	9.5E3
Explosion in LAW concentration		
Normal HEPA	1E-4	2.8E1
Failed HEPA	1E-7	4.8E1
Explosion in HAW feed tank		
Normal HEPA	1E-5	1.6E3
Failed HEPA	1E-7	1.7E3
Explosion in waste calciner		
Normal HEPA	1E-6	4.3E3
Failed HEPA	1E-9	1.3E4
Explosion in iodine absorber	2E-4	4.8
Solvent fire in codecon cycle		
Normal HEPA	1E-6 to 1E-4	2.3E1
Failed HEPA	1E-9 to 1E-7	5.6E1
Solvent fire in Pu extraction cycle		
Normal HEPA	1E-6 to 1E-4	3.1E-4
Failed HEPA	1E-11 to 1E-9	5.2E2
Ion exchange resin fire		
Normal HEPA	1E-4 to 1E-1	3.6E-1
Failed HEPA	1E-9 to 1E-6	1.8E3
Fuel assembly rupture in fuel receiving and storage		
Normal HEPA	1E-2 to 1E-1	1.3E-2
Failed HEPA	1E-5 to 1E-4	1.3E3
Dissolver seal failure		
Normal HEPA	1E-5	2.3E-2
Failed HEPA	1E-8	2.3E3
Release from hot UF_6 cylinder	5E-2	1.5
Criticality		
Normal HEPA	3E-5 to 8E-3	3.0E-2
Failed HEPA	3E-8 to 8E-6	3.5E-2

HAW = high activity waste LAW = low activity waste

Table C.58 Accident frequencies and population doses for reprocessing in the nuclear fuel cycle (Erdmann et al. 1979)[5]

Accident	Frequency (per plant year)	Population Dose for Reference Plant (person-rem total body)
Loss of fuel storage pool water	3E-6	50
Ion exchange bed fire and explosion	5E-4	2E-1
Criticality	6E-5	5
Hydrogen explosion in HAF tank	7E-5	7E-2
Fire in low level waste	1E-2	1E-1
Fuel assembly drop	2E-3	1E-1
Explosion in high-level waste calciner combined with HEPA filter failure	5E-10	6E6
Krypton cylinder rupture	1E-4	50

HAF = high aqueous feed

Table C.59 Accident frequencies and population doses for reprocessing in the nuclear fuel cycle (Fullwood and Jackson 1980)

Accident	Frequency (per plant year)	Population Dose for Reference Plant (person-rem total body)
H_2 fire an explosion in HAF tank combined with one HEPA filter failed	3E-6	9E-4
Solvent fire in the H_2 concentration combined with one HEPA filter failed	2E-6	7E-4
Red oil explosion in HLW concentration combined with one HEPA filter failed	4E-8	8E-3
Explosion in the HLW calciner combined with one HEPA filter failed	2E-7	2E-1
Red oil explosion in the fuel product concentration combined with one HEPA failed	4E-8	6E-4
Explosion in fuel product deitrator combined with one HEPA failed	4E-9	1.2E-2
Criticality in a process cell	2E-5	2
Failure of Krypton storage cylinder	1.3E-4	4E1
Hydrogen explosion in uranium reduction combined with one HEPA filter failed	9E-6	1.4E-4
Fuel assembly drop	1.2E-3	5E-2
Hydrogen explosion in fuel product denitrator fuuel tank combined wiith one HEPA filter failed	3E-6	1.2E-2

Table C.60 Accident frequencies and population doses for reprocessing in the nuclear fuel cycle (Cooperstein et al.)

Accident	Frequency (per plant year)	Population Dose for Reference Plant (person-rem total body)
HAW concentration explosion	1E-5	57
Codecontamination solvent fire	1E-6	2.6
LAW concentrator explosion	1E-4	3.2
HAF tank explosion	1E-5	4.9E2
Waste calciner explosion	1E-6	5.1E2
Fuel receiving and storage accident	1E-2	2.0E-3

Table C.61 Accident frequencies and population doses for spent fuel storage in the nuclear fuel cycle (Karn-Bransle-Sakerhat 1977)

Accident	Frequency (per plant year)	Population Dose for Reference Plant (person-rem total body)
Fuel transfer basket is dropped		
PWR	1E-4	2
BWR	2.5E-4	1.8
Fuel assemblies dropped		
PWR	9E-4	7E-1
BWR	6E-3	3E-1

Table C.62 Accident frequencies and population doses for solidified HLW storage in the nuclear fuel cycle (Smith and Kastenberg 1976)

Accident	Frequency (per plant year)	Population Dose for Reference Plant (person-rem total body)
Major rupture of a waste canister dropped during handling. Vent system effective	1.0E-4	7.2
Major rupture of a waste canister with an independent failure of one HEPA filter	1.0E-6	7.2E3
0.1-1 ton meteor impact in storage area	4.1E-9	1.0E5
10-100 ton meteor impact in storage area	2.0E-10	5.1E6
0.1-1 ton meteor impact in receiving area	4.8E-10	3.1E5
1-10 ton meteor impact in receiving area	1.25E-11	2.6E7

Table C.63 Preclosure geologic waste disposal radiological accident risk

Study	Expected Population Dose (person-rem/GW_e-year)	Dominant Risk Contributor
USDOE (1979)	Spent Fuel 2.1E-9 (whole body)	Waste Package dropped down shaft
	Glass HLSW 9.6E-12 (whole body)	
Erdman et al. (1979)	Glass HLSW 4.0E-5 (whole body)	Final Filter Failure

Table C.64 Transportation radiological accident risk[a]

Study	Plutonium Oxide	Spent Fuel	High Level Waste
Cohen and Dance (1975)	1.2E-3 to 1.7E-2 (total body)	3.5E-3 to 1.6 (total body)	
Erdman et al. (1979)	1.0E-3 (total body)	3.0E-5 (total body)	3.0E-3 (total body)
Fullwood and Jackson (1980)		3.0E-5 (total body)	1.0E-5 (total body)
USDOE (1979)*		5.0E-5 (total body)	1.1E-7 (total body)
USNRC (1977)*		1.4E-1 (total body)	
Berman et al. (1978)*			9.4E-3 (total body)
USAEC (1972); USNRC* (1975); USNRC (1976)		8.3E-3 (total body)	
Hodge and Jarrett* (1974)		1.2E-2 (total body)	5.1E-4 (total body)
USNRC (1976)*		2.3E-6 (total body)	5.4E-7 (total body)

(a) Measured in person-rem/GWe-year

Table C.65 Accident frequencies and population doses for transportation of spent fuel by rail and PuO_2 by truck in the nuclear fuel cycle (Cohen and Dance 1975)

Accident	Frequency (per shipment)	Population Dose for Generic Shipment (person-rem total body)
Spent Fuel		
Leakage of coolant from spent fuel cask	3E-4	5.8E-4
Release from a collision involving spent fuel	2E-8 to 9E-6	1.9E4
Release from a collision involving spent fuel followed by release of fuel from the cask	2E-10 to 9E-8	2.7E4
Plutonium Oxide		
Improperly closed plutonium oxide container	4E-4 to 1E-3	1.1
Release from a collision involving plutonium oxide	2E-9 to 3E-6	1.4E3
Criticality of plutonium oxide	2E-11 to 3E-8	2.5E4

Table C.66 Accident frequencies and population doses for transportation in the nuclear fuel cycle (Erdmann et al. 1979)

Accident	Frequency (per shipment)	Population Dose for Generic Shipment (person-rem total body)
Spent Fuel by Rail		
Loss of gases from inner cavity from rail accident	9E-6	1E-6
Loss of confinement and 50% fuel damage	4E-7	1E-1
Loss of confinement, 50% fuel damage, extensive fire	2E-9	2E3
Spent Fuel by Truck		
Loss of gas from inner cavity from truck accident	2E-5	5E-9
Loss of confinement and 50% fuel damage	2E-7	1E2
Loss of confinement, 50% fuel damage, extensive fire	2E-9	6E2
Plutonium Oxide by Truck		
Truck accident 1E-6 release fraction	1E-6	2
Truck accident 1E-4 release fraction	4E-11	2E1
Truck accident 1E-2 release fraction	6E-8	2E4
High-Level Waste by Rail		
Release to atmosphere and one canister breakage from rail accident	1E-5	7E2
Release to atmosphere and significant overheating	6E-8	6E3

Table C.67 Accident frequencies and population doses for rail transportation in the nuclear fuel cycle (Fullwood and Jackson 1980)

Accident	Frequency (per shipment)	Population Dose for Generic Shipment (person-rem total body)
Spent Fuel		
Loss of neutron shielding from a rail accident	2E-5	8E-7
Exposure of the inner spent fuel containing cavity	9E-6	1.7E-6
Exposure of the inner spent fuel containing cavity and 50% fuel damage	4E-7	0.5
Exposure of spent fuel with severe damage and fire	3E-9	1.7E3
High Level Waste		
Loss of neutron shielding from a rail accident	2E-8	5E-5
Release and extensive canister damage	3E-10	30
Release, extensive canister damage and fire	3E-12	3E3

Table C.68 Accident frequencies and population doses for rail transportation in the nuclear fuel cycle (PSE 1981)

Accident	Frequency (per year)	Population Dose for Generic Shipment (person-rem total body)
25-40 m fall	2E-6	2.8E-1
9-25 m fall	2E-5	2.8E-1
50-80 km/hr collision	2E-5	2.8E-1
80-100 km/hr collision	3E-4	2.8E-1
Collision and fire 1000°C >1 hr	8E-5	1.7E2
Collision and fire 800°C > 2 hr	2E-5	1.7E2
Fire 1000°C >1 hr	1E-4	2.0E-1
Fire 800°C >2 hr	2E-5	2.0E-1
Collision and closure errors	1E-4	1.1

Table C.69 Accident frequencies and population doses for rail transportation in the nuclear fuel cycle (Elder 1981)

Accident	Frequency (per shipment)	Population Dose for Generic Shipment (person-rem total body)
Rail accident and impact fails cask seal, causes loss of coolant and fuel fails	6.4E-6	6.8E2
Side impact fails pressure relief valve causing loss of coolant and fuel fails	1.2E-6	1.9E3
End impact fails pressure relief valve causing loss of coolant and fuel fails	6.4E-6	1.9E3
Side impact fails cask seal causing loss of coolant and fuel fails	1.2E-6	6.8E2

Table C.70 Normalized risk results for nuclear fuel cycle

Fuel Cycle Element	Expected Population Dose (Total Body person-rem/GWe-year) Original	Normalized	Reference
Milling	1.0E-3	2.7E-4	(Cohen and Dance 1975)
Conversion	5.6E-3	1.2E-2	(Cohen and Dance 1975)
Enrichment	3.7E-3	1.2E-2	(Cohen and Dance 1975)
Fuel Fabrication	1.0E-2	5.0E-3	(Cohen and Dance 1975)
MOX Fuel Refabrication	1.9E-2	1.2E-1	(Cohen and Dance 1975)
	4.0E-2	3.6E-2	(Erdmann et al. 1979)
	4.0E-7	3.3E-5	(Fullwood and Jackson 1980)
Fuel Reprocessing	---	3.1E-2	(Wood and Becar 1979)
	6.3E-3	3.2E-3	(Cohen and Dance 1975)
	---	5.6E-4	(PSE 1981)
	2.0E-4	2.2E-4	(Erdmann et al. 1979)
	---	1.5E-4	(Cooperstein et al. 1979)
	7.0E-5	5.4E-5	(Fullwood and Jackson 1980)
Spent Fuel Storage	---	1.8E-1	(PSE 1981)
	---	3.1E-2	(Wood and Becar 1979)
	1.7E-6	3.7E-5	(USDOE 1979)
	2.0E-5	2.7E-5	(Erdmann et al. 1979)
	8.9E-5	5.7E-6	(KBS 1977)
Solidified High Level Waste	2.3E-4	2.3E-4	(Smith and Kastenberg 1976)
Geologic Waste Disposal (preclosure)	4.0E-5	4.0E-5	(Erdmann et al. 1979)
	2.1E-9	2.1E-9	(USDOE 1979)
Transportation			
Plutonium Oxide	1.7E-2	6.6E-2	(Cohen and Dance 1975)
	1.0E-3	1.3E-3	(Erdmann et al. 1979)
Spent Fuel	---	1.6E-1	(Elder 1981)
	1.4E-1	1.6E-1	(USNRC 1977)
	1.6	7.8E-2	(Cohen and Dance 1975)
	1.2E-2	1.3E-2	(Hodge and Jarrett 1974)
	8.3E-3	9.3E-3	(USAEC 1972)
	---	7.1E-4	(PSE 1981)
	5.0E-5	5.6E-5	(USDOE 1979)
	3.0E-5	8.4E-6	(Erdmann et al. 1979)
	3.0E-5	8.4E-6	(Fullwood and Jackson 1980)
	2.3E-6	2.6E-6	(USNRC 1976)
High Level Waste	9.4E-3	4.2E-2	(Berman et al. 1978)
	5.1E-4	2.3E-3	(Hodge and Jarrett 1974)
	3.0E-3	8.4E-4	(Erdmann et al. 1979)
	1.0E-5	2.8E-6	(Fullwood and Jackson 1980)
	5.4E-7	2.4E-6	(USNRC 1976)

Table C.71 Capital equipment costs for fuel pellet fabrication (Mishima et al. 1983, Table 1)

Equipment/Procedure	Description	Manufacturer	Cost
2 Glove boxes	Inside floor dimensions: 5' 3" x 4' 11" 16 glove ports Box wall: 0.25" lead sandwiched between stainless steel sheets sheets 0.125" Windows: Leaded glass Gloves: Lead-loaded neoprene, 0.040" thick	Molitar Englewood, Colorado	$ 52,000
2 Balances	Cat. #3330-04 Load cell with remote controls and readouts. Dual range: To 3 kg, 0.1 g sensitivity; to 300 g, 0.01 g sensitivity	Scientech Boulder, Colorado	$ 4,100
Dry Granulator	ERWEKA Granulator Drive AR 400 Granulator TG 2/S	Chemical and Pharmaceutical Co., Inc. 225 Broadway, New York	$ 3,600
Blender	"Turbula:"® Type T2C	Chemical and Pharmaceutical Co., Inc. 225 Broadway, New York	$ 3,000
Press	30 Ton Hydraulic, double acting Reservoir and pumps remote (outside glove box) All controls outside glove box	Western Sintering Richland, Washington	$110,000
Glove box installation	$10,000/box Engineering and Crafts: 425 h at $47/h		$ 20,000
Equipment installation	Press: 200 h at $46/h Other: 120 h at $46/h		$ 14,720
TOTAL			$207,420

® Registered trademark of Willy A. Bachofer, Manufacturer, Basil, Switzerland

Table C.72 Capital equipment costs for powder reconstitution during fuel fabrication (Mishima et al. 1983, Table 2)

Equipment/Procedure	Description	Manufacturer	Cost
2 Glove boxes	Inside floor dimensions: 5' 3" x 4' 11" 16 Glove ports Box wall: 0.25" lead sandwiched between stainless steel sheets 0.125" Windows: Leaded glass Gloves: Lead-loaded neoprene, 0.040" thick	Molitar Englewood, Colorado	$52,000
Balance	Cat. #3330-04 Load cell with remote controls and and readouts. Dual range: To 3 kg, 0.1 g sensitivity; to 300 g, 0.01 g sensitivity	Scientech Boulder, Colorado	$ 2,100
Dry Granulator	ERWEKA Granulator Drive AR 400 Grnaulator TG 2/S	Chemical Pharmaceutical Co., Inc. 225 Broadway, New York	$ 3,600
Furnace	Model #51442 Control model #59344 (remote) 4800 watts Exterior dimensions: 20" W x 20" H x 24.5" L	Lindberg Watertown, Wisconsin	$ 1,950
Mill rack and mills	Rack Model #764AV: 30 1/4" x 12 3/4" x 15 3/4" H 3 Mills: Rubber-lined steel size 1 Stainless steel balls, 0.5", 100 lbs	E. T. Horn La Mirada, California	$ 2,310
Glove box installation	$10,000/box Engineering and Crafts: 425 h at $47/hr		$20,000
Equipment installation	160 hr at $46/h		$ 7,360
TOTAL			$89,320

Table C.73 Start-up operation costs for fuel fabrication (Mishima et al. 1983, Table 3)

Process	Personnel	Job Description	Cost
Pellet fabrication	Engineer	120 h at $65/h Prepare detailed operating procedures in conjunction with an operator. Supervise equipment shakedown.	$16,400
	Operator	120 h at $50/h Operate equipment start-up and shakedown	
	---	Preparation of criticality specification: 40 h at $65/h	
	---	Radiation monitoring: Included in labor contract	
Powder reconstitution	Engineer	120 h at $65/hr Prepare detailed operating procedures in conjunction with an operator. Supervise equipment shakedown.	$16,400
	Operator	120 h at $50/h Operate equipment start-up and shakedown	

Table C.74 Process operation costs for fuel fabrication (Mishima et al. 1983, Table 4)

Process		
Pellet Fabrication	Estimate assumes 3 shifts/day processing a 100-kg minimum lot of PuO_2 powder.	
	Two operators/shift at $50/h/operator	
	Maximum 20 kg powder processed/day	
	Labor cost/kg	$120.00
	Radiation monitoring: Included in labor overhead.	
	Supplies/kg: Does not include items required for shipping as powder. Includes such items as stainless steel cylinders, neoprene lead-loaded gloves for replacement, organics.	1.50
	Only utilities: Electricity/kg	0.80 kWh
	Total pellet fabrication price/kg	$122.00
Powder Reconstitution	One operator/shift for 4 h at $50/hr	
	10 kg pellets processed to powder in 4 shifts	16 h labor
	Labor cost/kg	$ 80.00
	Radiation monitoring: Included in labor overhead.	
	Supplies/kg	$ 0.75
	Only utilities: Electricity/kg	12.0 kWh
	Total powder reconstitution price/kg	$ 81.00

Table C.75 Summary of dose equivalent estimates for fabricating PuO_2 powder to unfired pellets during fuel Fabrication (Mishima et al. 1983, Table 9)

	Total Dose Equivalent for Three-Person Crew Processing 100 kg of PuO_2 (man-rem)	
	Average of Light Water Reactor Plutonium Produced in 1985	Low-Exposure Plutonium
Contact or hand exposure (gamma only)	67.0	18.0
Whole body dose equivalent including room background		
Average	0.95	0.14
Range based on variations in room background	(0.87 to 1.1)	(0.11 to 0.15)

Table C.76 Summary of dose equivalent estimates for reconstituting unfired PuO_2 pellets back to powder during fuel fabrication (Mishima et al. 1983, Table 10)

	Total Dose Equivalent for Two-Person Crew Processing 100 kg of PuO_2 (man-rem)	
	Average of Light Water Reactor Plutonium Produced in 1985	Low-Exposure Plutonium
Contact or hand exposure (gamma only)	64.0	17.0
Whole-body dose equivalent including room background		
Average	0.19	0.038
Range based on variations in room background	(0.14 to .26)	(.03 to .06)

Table C.77 Accident source terms and doses from uranium mill accidents (McGuire 1988, Table 3)

	Tornado		Tailing Pond Release		Fire in Solvent Extraction Circuit		Failure of the Air Cleaning System Serving the Yellowcake Drying Area	
Reference	Release	Dose	Release	Dose	Release	Dose	Release	Dose
GEIS	11,400 kg U total < 11,400 kg U respirable	< 2.2 x 10^{-7} rem to lungs at 500m	1400 tons solid 14,000,000 gal. liquids	Small. Cleanup assumed	< 13 kg U < 0.65 kg thorium[a]	< 1.36 rem[a] to bone at 500 m	11 kg insoluble U oxides over 8 hours	86 mrem to lung at 2000 m
Sand Rock DES	4550 kg U total < 4550 kg U respirable	< 1.1 x 10^{-7} rem at 4000m (max. dose)	Same as GEIS	-	< 1.1 kg U	10^{-7} rem to bone at 8000 m (nearest residence)	12 kg insoluble U oxides over 8 hours	10^{-3} rem to lung at 8000 m (nearest residence)
This Report	-	-	-	-	1.3 kg U	0.01 to 0.1 rem EDE	-	-

References

GEIS: "Final Generic Environmental Impact Statement on Uranium Milling," NUREG-0706, Volume 1, pp 7-1 to 7-20, September, 1980.
Sand Rock DES: "Draft Environmental Statement Related to the Operation of Sand Rocks Mill Project," NUREG-0889, pages 5-1 to 5-12, March, 1982.

[a]The dose value from GEIS is in error The solvent extraction was assumed to contain 5% as much Th-230 as uranium by weight. The value should have been 5% by activity This error causes the dose to be overestimated by a factor of about 50,000 times

Table C.78 Offsite doses calculated for fuel fabrication plants (McGuire 1988, Table 9)

Analysis	Key Assumptions	Criticality		UF_6-low enrich.		UF_6-high enrich.
		Effective DE	Thyroid DE	Effective DE	Bone DE	Effective DE
NUREG-1140	Building size: 250 m^2 Wind: F, 1 m/sec Release height: ground	0.5 to 2.6 rems at 100 m	1.1 to 8.2 rems at 100 m (child's thyroid)		-	0.2 to 1.5 rem at 100 m
Combustion Engineering	Building size: 0 Wind: F, 1 m/sec Release height. stack	0.27 rem at 800 m	1.7 rems at 800 m	0.05 rem at 800 m	0.82 rem at 800 m	-
Exxon	Building size: 0 Wind: F, 1m/sec Release height: ground	0.009 rem at 2000 m	4.5 rems at 2000 m	0.11 rem at 2000 m	1.7 rems at 2000 m	-
NFS, Erwin	Building size: 0 Wind: G, 0.5 m/sec Release height: same level as residence	-	5 rems at 1000 m	-	-	1 rem at 1000 m

DE = dose equivalent EDE = effective DE

Table C.79 Dose commitments from plutonium fuel fabrication facility accidents (McGuire 1988)

Type of accident	Dose commitment (rem)
Criticality	0.36 (thyroid)
Fire	0.02 (bone)
Explosion	0.02 (bone)

Table C.80 Maximum offsite individual dose commitments (Rem) from spent fuel reprocessing facility accidents (McGuire 1988)

	"Maximum Offsite Individual Dose Commitment (rem)
Accident	PWR MOX Fuel
Criticality	0.056 (thyroid)
Waste Concentrator Explosion	0.0069 (bone)
Pu Evaporator Explosion	0.019 (bone)
Fire	0.0135 (bone)

Table C.81 Calculated releases and doses from spent fuel storage accidents (McGuire 1988, Table 10)[6]

Reference	Accident	Kr-85 Release	Skin Dose	Effective Dose Equivalent	I-129 Release	Thyroid Dose
Storage in pools: Generic Environmental Impact Statement, NUREG-0575	Tornado driven missile followed by calm	19,000 Ci	0.06 rem at 275 m	Not calculated	0.00006 Ci	0.03 rem at 275 m
Storage in pools: GE-Morris SER, NUREG-0709	Drop of a fuel storage basket	6,000 Ci	Not calculated	0.016 rem at 150 m	0.00008 Ci	0.0004 rem at 150 m
Dry cask, drywell, or dry vault storage: NUREG-1140	Removal of cask lid with all fuel elements ruptured	8,000 Ci	Not calculated	0.003 rem at 100 m	0.004 Ci	0.005 to 0.04 rem within 100 m (child)

Table C.82 Maximum possession limits, release fractions, and doses due to a major facility fire for radiopharmaceutical manufacturing (McGuire 1988, Table 14)

Radioactive material	Maximum licensed possession limit (Ci)	Licensee	Release fraction	Effective dose equivalent, rem**
H-3	150,000	NEN*	0.5	0.1 to 10.
C-14	500	NEN-Boston	0.01***	0 to 0.01
P-32	500	NEN	0.5	0.04 to 4.
S-35	1,000	NEN	0.5	0.01 to 1.
Ca-45	50	NEN	0.01	0 to 0.003
Cr-51	100	NEN	0.01	0
Fe-55	200	NEN	0.01	0 to 0.005
Ni-63	1,000	NEN	0.01	0.001 to 0.06
Se-75	100	NEN	0.01	0 to 0.008
Kr-85	10,000	NEN	1.0	0 to 0.002
Rb-86	50	NEN	0.01	0 to 0.003
Sr-90	500	NEN	0.01	0.05 to 5.
Mo-99	2,000	NEN/Squibb	0.01	0.001 to 0.08
Ru-103	25	NEN	0.01	0 to 0.002
Sn-113	100	NEN	0.01	0 to 0.01
I-125	100	NEN/Mallinckrodt	0.5	0.3 to 30. (child's thyroid)
I-131	500	Mallinckrodt	0.5	5 to 500. (child's thyroid)
Xe-133	1,000	NEN	1.0	0 to 0.001
Cs-134	25	NEN	0.01	0 to 0.01
Cs-137	500	NEN	0.01	0.002 to 0.2
Ce-141	50	NEN	0.01	0 to 0.004
Yb-169	50	NEN	0.01	0 to 0.004
Tm-170	25	NEN	0.01	0 to 0.006
Au-198	200	NEN	0.01	0 to 0.008

*NEN = New England Nuclear, North Billerica, Mass.

**zero in the dose column indicates a dose of less than one millirem.

***Non-carbon dioxide release fraction.

Table C.83 Maximum possession limits, release fractions, and doses due to a major facility fire for a radiopharmacy (McGuire 1988, Table 15)

Radioactive material	Maximum licensed possession limit (Ci)	Chemical forms	Release fraction	Dose equivalent, rem
H-3	0.05 Ci	In vitro test kits	0.5	0
C-14	0.05	In vitro test kits	0.01[a]	0
Cr-51	0.15	Labeled serum, sodium chromate	0.01	0
Co-58	0.15	Cyanocobalamin (vitamin B12)	0.001	0
Fe-59	0.15	Chloride, citrate, sulfate	0.01	0
Se-75	0.1	Labeled compound	0.01	0
Sr-90	0.5	Nitrate, chloride	0.01	0 to 0.006
Mo-99/Tc-99m	75.	Mo-99/Tc-99m generators (liquid)	0.01	0 to 0.004
I-125	0.15	Na I, fibrogen, diagnostic kits	0.5	0.001 to 0.1 (child's thyroid)
I-131	0.75	Na I, labeled organic compounds	0.5	0.007 to 0.7 (child's thyroid)
Xe-133	1.	Gas or saline	1.0	0

Note: sealed sources are not included.
Reference: Sutter report.

[a]Non-carbon dioxide release fraction.

Table C.84 Maximum possession limits, release fractions, and doses due to a major facility fire for sealed source manufacturing (McGuire 1988, Table 16)

Radioactive material	Maximum licensed posession limit (Ci)	Form	Licensee	Release fraction	Effective dose equivalen rems
H-3	100,000 Ci	volatile	Safety Light	0.5	0.06 to 6
C-14	50		Amersham	0.01*	0 to 0.00
Co-60	20,000	75% metallic pellets 25% sealed sources	Automation Ind.	0.0001	0.004 to 0.4
Kr-85	1,500	noble gas	3M	1.0	0
Sr-90	3,000	1000 Ci in solution in 0.1 liter of 0.1 N HCl also, sealed sources	3M	0.01	0.3 to 33
Sb-124	50		Monsanto	0.01	0 to 0.01
I-125	100	5 Ci in KOH liquid 5 Ci on resin beads	3M	0.5	0.7 to 70. (child's thyroid)
Cs-137	10,000		Tech/Ops	0.01	0.03 to 3.
Pm-147	3,500	800 Ci in solution in 0.1 liter of 0.1 N HCl also, sealed sources	3M	0.01	0.008 to 0.
Yb-169	100	5 Ci liquid Yb chelate	3M	0.5	0.004 to 0.4
Tm-170	5,000		Tech/Ops	0.01	0.01 to 1.
Ta-182	200	metallic or carbide	Tech/Ops	0.01	0 to 0.001
Ta-183	2,000	metallic or carbide	Tech/Ops	0.01	0 to 0.001
Ir-192	50,000	solid metal or sealed source	Tech/Ops	0.0001	0.001 to 0.1
Tl-204	50		Monsanto	0.01	0 to 0.001
Bi-210	200	metal slugs	3M	0.001	0 to 0.03
Po-210	4,000	up to 1500 Ci in 40 liters of 2M HNO_3; up to 2500 Ci in waste primarily as microspheres	3M	0.01 0.001	1. to 100. (per 1500 Ci) 0.2 to 20. (per 2500 Ci)
Np-237	0.1		Monsanto	0.001	0 to 0.04
Pu-238, 236, 239, 240, 241, 242	199 g	250 Ci as unsealed powder oxide	Monsanto	0.001	0.75 to 75. (per 250 Ci)
Am-241	6,000	250 Ci as unsealed powder oxide; remainer as sealed sources	Monsanto	0.001	1.2 to 120. (per 250 Ci)
Cm-242	600		Monsanto	0.001	0.1 to 10.
Cm-243	10		Monsanto	0.001	0.03 to 3.0
Cm-244	600		Monsanto	0.001	1.5 to 150.
Cf-252	10 mg	solid pellet	Monsanto	0.001	0.006 to 0.6

*Non-carbon dioxide release fraction.

Table C.85 Maximum possession limits, release fractions, and doses due to a major facility fire for university research laboratories (McGuire 1988, Table 17)

Radioactive material	Maximum licensed possession limit (Ci)	Release fraction	Effective dose equivalent, rems
H-3	3000	0.5	0.002 to 0.2
C-14	10	0.01*	0
P-32	5	0.5	0 to 0.04
S-35	5	0.5	0 to 0.01
Ni-63	1	0.01	0
Sr-90	0.5	0.01	0 to 0.005
Mo-99/Tc-99m	10	0.01	0
I-125	8	0.5	0.06 to 5.5 (child's thyroid)
I-131	1	0.5	0.01 to 1. (child's thyroid)
Xe-133	10	1.	0
Po-210	10	0.01	0.009 to 0.9
Am-241	0.5	0.001	0.003 to 0.3
Cm-244	1	0.001	0.003 to 0.3
Cf-252	0.1	0.001	0 to 0.01

*Non-carbon dioxide release fraction.

Table C.86 Waste warehousing airborne releases and doses due to a major facility fire (McGuire 1988, Table 18)

Radioactive material	Quantity present (Ci)	Release fraction	Effective dose equivalent, rem
H-3	6200	0.5	0.004 to 0.4
C-14	160	0.01*	0 to 0.004
P-32	160	0.5	0.01 to 1.
S-35	120	0.5	0.002 to 0.2
Cr-51	60	0.01	0
I-125	280	0.5	4 to 400. (child's thyroid)
I-131	20	0.5	0.4 to 40. (child's thyroid)

*Non-carbon dioxide release fraction.

Table C.87 Alternative disposal standards for uranium mill tailings (EPA 1983, Table S.1)

Longevity Requirement	Radon Control after Disposal (pCi/m^2s)				
	No Radon Requirement	60	20	6	2
No Controls	A				
Active control for 100 years	B1	B2	B3		
Passive control for 1000 years	C1	C2	C3	C4	C5
Passive control for 1000 years, with improved radon control during operations for new piles		D2	D3	D4	D5

Table C.88 Alternative standards and control methods for existing uranium mill tailings piles (EPA 1983, Table 4.2)

		Control Method Characteristics					
Alternative Standard	Control Method Designation	Earth Cover Thickness (m)	Slope	Rock on Slopes	.5m Pebbly Soil on Top	Maintenance	Landscaping
A	-						
B1	B1-E	0.5	3:1			100 years	X
B2	B2-E	1.5	3:1			100 years	X
B3	B3-E	2.4	3:1			100 years	X
C1	C1-E	0.5	5:1	X	X		
C2	C2-E	1.5	5:1	X	X		
C3	C3-E	2.4	5:1	X	X		
C4	C4-E	3.4	5:1	X	X		
C5	C5-E	4.3	5:1	X	X		
D2	Same as C2						
D3	Same as C3						
D4	Same as C4						
D5	Same as C5						

Table C.89 Alternative standards and control methods for new uranium mill tailings piles (EPA 1983, Table 4.3)

		Control Method Characteristics							
Alternative Standard	Control Method Designation	Earth Cover Thickness (m)	Slope	Rock on Slopes	.5m Pebbly Soil on Top	Maintenance	Put Below Grade	Liner	Landscapin:
A	A-N	Construction of initial embankments only							
B1	B1-N	.5	3:1			100 years		X	X
B2	B2-N	1.5	3:1			100 years		X	X
B3	B3-N	2.4	3:1			100 years		X	X
C1	C1-N	.5	5:1	X	X			X	
C2	C2-N	1.5	5:1	X	X			X	
C3	C3-N	2.4	5:1	X	X			X	
C4	C4-N	3.4	5:1	X	X			X	
C5	C5-N	4.3	5:1	X	X			X	
D2	D2-N	1.5					X	X	X
D3	D3-N	2.4					X	X	X
D4	D4-N	3.4					X	X	X
D5	D5-N	4.3					X	X	X

Table C.90 Summary of values for alternative disposal standards for uranium mill tailings (EPA 1983, Table S.2)

Alternative Standards	Stabilization		Radon Control				Water Protection
	Chance of Misuse	Tailings Erosion Avoided (years)	Maximum Risk[a] of Lung Cancer (% reduction)	Deaths Avoided[b] First 100 years	1,000 years	Total	Longevity (years)
A	Very likely	0	2 in 10^2(0)	0	0	0	0
B1	Likely	Hundred	1 in 10^2(50)	300	1200	1200	100
B2	Less Likely	Hundreds	4 in 10^3(80)	480	1800	1800	100
B3	Less Likely	Hundreds	1 in 10^3(95)	570	2100	2100	100
C1	Likely	Hundred	1 in 10^2(50)	300	3000	Thousands	100
C2	Less Likely	Thousands	4 in 10^3(80)	480	4800	Many 1000's	100's
C3	Unlikely	Thousands	1 in 10^3(95)	570	5700	Tens of 1000's	1000
C4	Very Unlikely	Many thousands	3 in 10^4(98.5)	590	5900	Tens of 1000's	>1000
C5	Very Unlikely	Many thousands	1 in 10^4(99.5)	600	6000	Tens of 1000's	>1000
D2	Unlikely	Thousands	4 in 10^3(80)	480	4800	Many 1000's	1000
D3	Unlikely	Many thousands	1 in 10^3(95)	570	5700	Tens of 1000's	1000
D4	Very unlikely	Many thousands	3 in 10^4(98.5)	590	5900	Tens of 1000's	>1000
D5	Very unlikely	Many thousands	1 in 10^4(99.5)	600	6000	Tens of 1000's	>1000

[a] Lifetime risk of fatal cancer to an individual assumed to be living 600 meters from the center of a model tailings pile. The estimates of benefits assume no credit for engineering factors required to provide "reasonable assurance" of design compliance for the specified radon control level and period of longevity.

[b] These estimates pertain to the control of 26 existing piles and 9 projected new pile equivalents. Of the approximately 600 deaths which are estimated to occur in the first 100 years under no control conditions, about 500 are the result of the existing tailings and 100 are due to future tailings.

Table C.91 Cost-effectiveness of control methods for uranium mill tailings (EPA 1983, Table 4.8)

Control Method	Effectiveness Index	Total Cost (10^6 1983 $)	Average Cost	Incremental Cost
2 million MT Existing Pile				
A	0	0	---	---
B1	1.0	4.2	Eliminated from consideration	
B2	1.8	6.9	Eliminated from consideration	
B3	3.1	9.2	Eliminated from consideration	
C1	4.3	3.2	.7	.7
C2	6.9	5.9	.9	1.0
C3	7.9	8.3	1.1	2.4
C4	8.6	10.9	1.3	3.7
C5	9.2	13.3	1.4	4.0
7 million MT Existing Pile				
A	0	0	---	---
B1	1.0	6.4	Eliminated from consideration	
B2	1.8	10.4	Eliminated from consideration	
B3	3.1	14.0	Eliminated from consideration	
C1	4.3	6.3	1.5	1.5
C2	6.9	10.5	1.5	1.6
C3	7.9	14.3	1.8	3.8
C4	8.6	18.5	2.2	6.0
C5	9.2	22.2	2.4	6.2
22 million MT Existing Pile				
A	0	0	---	---
B1	1.0	10.8	10.8	10.8
B2	1.8	17.3	Eliminated from consideration	
B3	3.1	23.0	Eliminated from consideration	
C1	4.3	13.6	3.2	0.8
C2	6.9	20.6	3.0	2.7
C3	7.9	26.8	3.4	6.2
C4	8.6	33.8	3.9	10.0
C5	9.2	40.0	4.3	10.3
8.4 million MT New Pile				
A	0.0	1.3	---	---
B1	1.0	11.4	Eliminated from consideration	
B2	1.8	15.0	Eliminated from consideration	
B3	3.1	19.0	Eliminated from consideration	
C1	4.3	11.4	2.7	2.3
C2	6.9	16.0	2.3	1.8
D2	7.5	32.3	Eliminated from consideration	
C3	7.9	20.0	2.5	4.0
D3	8.3	35.5	Eliminated from consideration	
C4	8.6	24.3	2.8	6.1
D4	9.0	39.5	Eliminated from consideration	
C5	9.2	28.4	3.1	6.8
D5	9.6	43.1	4.5	36.8

Table C.92 Summary of costs in millions of 1983 dollars for alternative disposal standards for uranium mill tailings (EPA 1983, Table S.3)

Alternative Standard	Assumed Control Method	Cover Thickness (meters)	Industry Costs, Undiscounted			Present Worth Costs (10% discount rate)
			Existing Tailings	Future Tailings	Total	
A	No control	-	0	4	4	1
B1	Above-grade,	0.5	155	84-474	239-629	141-319
B2	3:1 slope,	1.5	253	98-549	351-802	219-424
B3	irrigation and maintenance for 100 years	2.4	338	114-632	452-970	288-524
C1	Above-grade,	0.5	152	124-474	276-626	157-316
C2	5:1 slope,	1.5	253	145-570	398-823	240-433
C3	rock cover on	2.4	343	165-653	508-996	314-537
C4	slopes, 0.5 m	3.4	443	186-744	629-1187	397-651
C5	of pebbly soil on top of pile	4.3	532	215-829	747-1361	474-755
D2	Same as C for	1.5	253	184-837	437-1090	249-546
D3	existing piles	2.4	343	201-906	544-1249	323-644
D4	and staged	3.4	443	221-989	664-1432	406-755
D5	disposal below-grade for new piles	4.3	532	252-1065	784-1597	483-855

Table C.93 Estimated risks from spent fuel pool fires (Jo et al. 1989, Table 3.1)

Event	Probability	
	PWR Plant	BWR Plant
Structural Failure of Pool Resulting from Seismic Events	1.8E-6/Ry*	6.7E-6/Ry
Probability of a Cask Drop Caused by Human Error	3.1E-4/Ry	3.1E-4/Ry
Reduction in Failure Rate for Cask Drop Implementing Generic Issue A-36	1.0E-3	1.0E-3
Conditional Probability of Pool Structural Failure Given a Cask Drop	1.0	1.0
Conditional Probability of a Clad Fire Given a Pool Structural Failure**	1.0	0.25
Frequency of Spent Fuel Pool Fire from Seismic Initiator	1.8E-6/Ry	1.68E-6/Ry
Frequency of Spent Fuel Pool Fire from a Cask Drop Initiator	3.1E-7/Ry	7.75E-8/Ry

*Ry = Reactor year.
**NUREG/CR-4982, p. 75.

Table C.94 Offsite consequence calculations for spent fuel pool fires (Jo et al. 1989, Table 3.2)

Case	Characterization	Source Term*	Population	Public Health Dose (person-rem)	Offsite Property Damage ($1983)
1	Average Case	Last fuel discharged 90 days after discharge	340 persons/ $mile^2$	7.97×10^6	3.41×10^9
2	Worst Case	Entire pool inventory 30 days after discharge	Zion population (roughly 860 persons/$mile^2$)	2.56×10^7	2.62×10^{10}

*From NUREG/CR-4982.

Table C.95 Onsite property damage costs in dollars per spent fuel pool accident (Jo et al. 1989, Table 3.3)

Item	Best Estimate	Worst Case
Cleanup and Decontamination	1.65E8	1.65E8
Repair	7.2E7	7.2E7
Replacement Power	8.67E8	1.66E9
Total Number of Operating Years Remaining	29.8 years	29.8 years
Number of Years Plant is Out of Service	5 years	7 years
Expected Dollar Loss	8.24E9	1.29E10

Table C.96 Incremental storage costs in 1983 dollars associated with limited low-density racking in the primary spent fuel pool (Jo et al. 1989, Table 3.6)

STORAGE OPTION	PER UNIT			ALL PLANTS		
	0%*	5%	10%	0%*	5%	10%
POOL	2.17+7	1.67+7	1.28+7	2.34+9	1.80+9	1.38+9
DRYWELL	9.13+6	8.24+6	6.85+6	9.86+8	8.90+8	7.40+8
VAULT	2.07+7	1.67+7	1.28+7	2.24+9	1.80+9	1.38+9
CASK	1.20+7	1.22+7	1.05+7	1.30+9	1.32+9	1.13+9
SILO	1.56+7	1.22+7	9.35+6	1.68+9	1.32+9	1.01+9

*Zero % discount rate corresponds to the case where additional storage capacity is built now.

Notes: 1. These costs include the cost of in-pool reracking and the incremental costs associated with the change in additional storage requirements resulting from the decrease in primary pool capacity.
2. Assuming the extra storage capacity is built when required, two discount rates are applied.

Table C.97 Summary of Parameters affecting attributes for the spent fuel pool inventory reduction option (Jo et al. 1989, Table 3.8)

Attributes	Factors Affecting Attributes	Description	Quantification	References
Public Health Dose Reduction	A. Pool Failure Probability	Seismic Structural Failure		Table 3.1
		High - PWR	1.8×10^{-6} /Ry	Ref. 2
		- BWR	1.68×10^{-6}	
		Low	= 0	
		Failure due to Cask Drop		
		High - PWR	3.1×10^{-7} /Ry	Ref. 2
		- BWR	7.75×10^{-8}	
		Low	= 0	
		Others	= 0	
	B. Number of Pools Involved	PWR	69	DOE/RL-87-11
		BWR	39	
	C. Average Remaining Life-Time of Plant	PWR	29.8	DOE/RL-87-11
		BWR	27.9	
	D. Radioactive Inventory Release	Worst Case	Total Inventory 30 days After Discharge	NUREG/CR-4982
		Best Estimate	Last Fuel Discharge 90 Days After Discharge	
	E. Meteorology		Zion	
	F. Population	Worst Case	Zion (860 people/sq. mi.)	
		U.S. Average	340 people/sq. mi.	
	G. Risk Reduction	80% Sequence Frequency Reduction	80%	NUREG/CR-4982
Reduction of Occupational Exposure --Accidental			Considered to be insignificant compared to Public Health Impact	
Reduction of Occupational Exposure --Routine			No significant change expected	

Attributes	Factors Affecting Attributes	Description	Quantification	References
Offsite Property Damage	A, B, C, D, E, F, G	Same as those of Public Health		
	Ecomony		Zion	
	Discount Rate		10%	
Onsite Property Damage	Decontamination, Refurbishment and Replacement Power Time.		5 years	NUREG/CR-3568 EPRI NP-3380
	Discount Rate		10%	
Reg. Efficiency	Unaffected			
Improvement in Knowledge	Unaffected			
Industry Implementation and Operation	Additional Storage Option and Reracking Cost.	High (Pool Option) Low (Drywell Option)		DOE/RL-87-11 EPRI NP-3365
	Discount Rate		10%	
NRC Development /Implementation/ Operation	Unaffected			

Table C.98 Summary of industry-wide value-impact analysis of the spent fuel pool inventory reduction option[a] (Jo et al. 1989, Table 3.9)

Attributes	Dose Reduction (Person-Rem) Best Estimate	Dose Reduction (Person-Rem) High Estimate[b]	Evaluation ($1983) Best Estimate	Evaluation ($1983) High Estimate[b]
Public Health	4.00×10^4	1.28×10^5	4.00×10^7	1.28×10^8
Occupational Exposure				
/Accidental	≈ 0	≈ 0	≈ 0	≈ 0
/Routine	≈ 0	≈ 0	≈ 0	≈ 0
Offsite Property			1.42×10^6	2.22×10^6
Onsite Property			5.54×10^6	4.25×10^7
Regulatory Efficiency			Unaffected	
Improvement in Knowledge			Unaffected	
Industry Implementation and Operation			-1.38×10^9	-1.13×10^9
NRC Development, Implementation and Operation			Unaffected	
Net Benefit ($)			-1.33×10^9[c]	-9.57×10^8
Benefit ($)/Cost ($) Ratio			0.035[c]	0.15
Ratio of Public Dose Reduction per Million Dollars Cost (Person-rem/10^6)			29.0[c]	113.0
Cost of Implementation per Averted Person-rem ($/Person-rem)			3.45×10^4[c]	8.83×10^4

[a] Based upon a U.S. pool population of 108.
[b] High estimate is based on the 'Worst Case' source term release and Zion site population (see Table 3.2).
[c] Based on 1988 dollars, the Best Estimate Net Benefit, Benefit/Cost Ratio, Public Dose Reduction per Million Dollars Cost and Cost per Averted Person-rem would be -1.47×10^9 Dollars, 0.032, 26.4 Person-rem and 3.79×10^4 Dollar/Person-rem, respectively. Cost escalation during 1983-1988 was assumed to be 9.8% (Reference 17).

Table C.99 Failure frequency for generic spent fuel pool cooling and makeup systems (Jo et al. 1989, Table 4.1)

System Type	Description	Failure Rates Per Demand: Cooling System Train 1**	Cooling System Train 2	Makeup System Train 1	Makeup System Train 2	Fire System	Total Failure Frequency Per System Year
A.	Minimum SRP Requirement	0.1	0.05	0.015	0.05	--	3.8×10^{-6}
B.	Minimum SRP Requirement With Credit for Fire System	0.1	0.05	0.015	0.05	0.05	1.9×10^{-7}
C.	Old Existing Plant with Both Cooling Pumps Required 30% of Timett	0.1	0.3	0.015	0.05	--	2.2×10^{-5}
D.	Old Existing Plant With Credit for Fire System	0.1	0.3	0.015	0.05	0.05	1.1×10^{-6}

*Reference 1.
**Units of failure per system year.

SRP = Standard Review Plan

Table C.100 Value-impact for generic improvements to the spent fuel pool cooling system* (Jo et al. 1989, Table 4.2)

System	Description	Improvement	Improvement Cost (1983$)	Expected Averted Cost (1983$)	Benefit/ Cost Ratio
A.	Minimum SRP	1. Additional pump	50,000	None	0.0
		2. Additional train	1.0E6	545 to 6640	<<0.01
B.	Minimum SRP Requirement With Credit for Fire System	1. Additional pump	50,000	None	0.0
		2. Additional train	1.0E6	27 to 330	0.0
C.	Old Existing Plant With Both Cooling Pumps Required 30% of Time	1. Additional pump	50,000	2500 to 30,400	.05 to 0.61
		2. Additional train	1.0E6	3160 to 38,550	.003 to 0.04
D.	Old Existing Plant With Credit for Fire System	1. Additional pump	50,000	125 to 1500	.0025 to 0.03
		2. Additional train	1.0E6	159 to 1940	<.002

*Quantification reflects a single spent fuel pool.

System A - Minimum cooling and makeup system required by the SRP:[13] One full capacity cooling train with redundant active components (i.e., redundant valves and pumps). One Category I makeup system and one backup pump or system (not required to be Category I) which can be aligned to a Category I water supply.

System B - Minimum cooling and makeup system with credit for makeup from fire system (Note that some plants may identify the fire system as the backup in System A).

System C - Typical older system comparable to current SRP requirements: One cooling train with backup active components (but backup components are required to supplement cooling about 30% of time[11]); One safety grade makeup train and one non-safety grade makeup system.

System D - Typical older system (System C) with third makeup train available (e.g., fire system).

Table C.101 Offsite property damage and health costs per spent fuel pool accident* (Jo et al. 1989, Table 5.1)

Case	Characterization	Source Term	Population	Use of Spray System	Radiological Dose (person-rem)	Property Damage Costs $
1	Average Case	Last fuel discharged 90 days after discharge	340 persons/ sq. mile	No	7.97E6	3.41E9
2	Average Case	Last fuel discharged 90 days after discharge	340 persons/ sq. mile	Yes	1.25E6	6.16E7
3	Worst Case	Entire pool density 30 days after discharge	Zion Population (roughly 860 persons/sq. mile)	No	2.56E7	2.62E10
4	Worst Case	Entire pool density 30 days after discharge	Zion Population (roughly 860 persons/sq. mile)	Yes	6.78E6	4.48E8

*MACCS Calculations.

Table C.102 Summary of industry-wide value-impact analysis of the spent fuel pool post-accident spray system[a] (Jo et al. 1989, Table 5.2)

Attributes	Total Dose Reduction (Person-rem)		Total Monetary Risk Reduction ($1983)	
	Best Estimate[b]	High Estimate[b]	Best Estimate[b]	High Estimate[b]
Public Health	4.20E4	1.18E5	4.20E7	1.18E8
Occupational Exposure	≈ 0	≈ 0	≈ 0	≈ 0
Offsite Property			6.77E6	5.20E7
Onsite Property			≈ 0	≈ 0
Industry Implementation and Operation			-1.08E8	-1.08E8
Net Benefit ($)			-5.92E7[c]	6.2E7
Benefit ($)/Cost ($) Ratio			0.45[c]	1.57
Ratio of Public Dose Reduction per Million Dollars Cost (Person-rem/10^6)			3.89E2[c]	1.09E3
Cost of Implementation per Averted Person-rem ($/Person-rem)			2.57E3[c]	9.15E2

(a) Population of 108 spent fuel pools.
(b) See Table 3.2 for source terms and demographic assumptions.
(c) Based on 1988 dollars, Best Estimate Net Benefit, Benefit/Cost Ratio, Public Dose Reduction per Million Dollar Cost and Cost per Averted Person-rem would be -6.92E7 dollars, 0.42, 354 Person-rem and 2.82E3 dollars/person-rem, respectively. Cost escalation during 1983-1988 was assumed to be 9.8% (Reference 17).

Table C.103 Facility descriptors for accident analysis (Ayer et al. 1988, Table 2.1)

Descriptor
Accident Compartment
Wall material
Ceiling material
Floor material
Thickness of wall
Thickness of ceiling
Thickness of floor
Length of room
Width of room
Height of room
Volume of room
Vessels in Accident Compartment
Type of vessel (pressurized, unpressurized)
Construction material
Height of vessel
Exposed width
Elevation of vessel
Weight of empty vessel (or wall thickness and density)
Failure pressure
Ventilation System
Schematic
Elevation of inlet duct to compartment
Filter type
Filter efficiency
Blower performance curve
Duct height
Duct equivalent diameter
Duct heat transfer area
Duct floor area
Duct length
Duct X-sectional flow area
Duct Wall properties
Outside emissivity
Outside absorptivity
Density
Thermal conductivity
Specific heat
Thickness
Volume of rooms, cells, plenums
Alternate Flow Paths
Time of generation
Elevation of path
Size of opening (equivalent area circular diameter)
Pressure on other side

Table C.104 Fuel manufacturing process descriptors (Ayer et al. 1988, Table 3.6)

Descriptor
Radioactive Material Inventories
Form
Containment
Location
Quantity
Properties
Radioactivity
Radioactive Material in Containers
Volume of Powder
Moisture Content of Powder
Volume of Air in Closed Containers
Mass of Liquid
Volume of Liquid
Hazardous Material Inventories
Location
Quantity
Surface Area
Material Type
Energy
Process Parameters
Initial Temperatures Compartment
Radioactive Powders in Closed Containers
Radioactive Liquids in Closed Containers
Radioactive Liquids in Open Containers
Outside of Vessels
Duct Wall
Initial Pressures in
Inlet Duct
Compartment
Exit Duct

Table C.105 Fuel reprocessing process descriptors (Ayer et al. 1988, Table 3.8)

Descriptor
Radioactive Material Inventories
Form
Location
Containment
Quantity
Properties
Radioactivity
Radioactivity
Containment
Radioactive Material in Containers
Volume of Powder
Moisture Content of Powder
Volume of Air in Closed Containers
Mass of Liquid
Volume of Liquid
Hazardous Material Inventories
Energy
Location
Quantity
Surface Area
Material Type
Process Parameters
Initial Temperatures Compartment
Radioactive Powders in Closed Containers
Radioactive Liquids in Closed Containers
Radioactive Liquids in Open Containers
Outside of Vessels
Duct Wall
Solvent Stream
Initial Pressures in
Inlet Duct
Compartment
Exit Duct
Solvent Stream

Table C.106 Waste storage/solidification process descriptors (Ayer et al. 1988, Table 3.10)

Descriptor
Radioactive Material Inventories
Form
Containment
Location
Quantity
Properties
Radioactivity
Radionuclide Volatility
Radioactive Material in Containers
Volume of Powder
Moisture Content of Powder
Volume of Air in Closed
Mass of Liquid
Volume of Liquid Containers
Hazardous Material Inventories
Location
Quantity
Surface Area
Material Type
Energy
Process Parameters
Initial Temperatures Compartment
Radioactive Powders in Closed Containers
Radioactive Liquids in Closed Containers
Radioactive Liquids in Open Containers
Outside of Vessels
Glass Surface
Duct Wall
Initial Pressures in
Inlet Duct
Compartment
Exit Duct

Table C.107 Spent fuel storage process descriptors (Ayer et al. 1988, Table 3.11)

Descriptor
Radioactive Material Inventories
Form
Containment
Location
Quantity
Properties
Radioactivity
Radioactive Material in Containers
Volume of Air in Closed Containers
Mass of Liquid
Volume of Liquid
Hazardous Material Inventories
Location
Quantity
Surface Area
Material Type
Energy
Process Parameters
Initial Temperatures
Compartment
Radioactive Powders in Closed Containers
Radioactive Liquids in Closed Containers
Radioactive Liquids in Open Containers
Outside of Vessels
Duct Wall
Initial Pressures in
Inlet Duct
Compartment
Exit Duct

Table C.108 Behavior mechanisms for airborne particles (Ayer et al. 1988, Table 4.1)

Mechanism	Description	Influencing Elements
Diffusion	Movement of particles due to random gas molecular collisions and microscopic eddies in air	Particle size Temperature
Settling	Effect of gravity upon airborne particles	Particle size Turbulence Induced gas flow
Coagulation	The adherence of a particle to another upon collision to produce a particle of larger size and, for solids, less dense	Number of particles Eddy velocity Particle size
Condensation	Particle Generation (condensation of vapors upon condensate nuclei), or particle growth (condensation of vapors on existing particles)	Type of vapor Local temperature Particle size
Agglomeration	Same as coagulation (for colloids) and coalescence (for liquids)	Number of particles Eddy velocity Particle size
Scavenging	The removal of airborne particles by materials falling through a fluid volume	Particle size
Diffusiophoresis	Movement of particles caused by concentration gradients in the gas phase	Vapor condensation rate
Thermophoresis	Movement of particles down a temperature gradient	Temperature gradient

Table C.109 Unscaled and scaled total accident risks to the public for non-reactor fuel cycle facilities

	Total Accident Risk (person-rem/yr)		
Fuel Cycle Element	**Unscaled**	**Scaled (1/GWe)[a]**	**Table**
Uranium Milling	--	2.7E-4	C.70
UF_6 Conversion	--	0.012	C.70
Enrichment	--	0.012	C.70
Fuel Fabrication	--	0.0050	C.70
MOX Fuel Refabrication	--	0.12	C.70
		0.036	C.70
		3.3E-5	C.70
Fuel Reprocessing	--	0.031	C.70
		0.0032	C.70
		5.6E-4	C.70
		2.2E-4	C.70
		1.5E-4	C.70
		5.4E-5	C.70
Spent Fuel Storage	--	0.18	C.70
		0.031	C.70
		3.7E-5	C.70
		2.7E-5	C.70
		5.7E-6	C.70
Cask Storage	1.2[b]	--	C.32
Drywell Storage	8.5[b]	--	C.31
	0.7[b]	--	C.32
Operations Phase	0.004[b]	--	C.44
HLW Storage	--	2.3E-4	C.70
Geologic Waste Disposal			
Total Preclosure	--	4.0E-5	C.70
Operations Phase	0.010	--	C.14
	1.5E-5	--	C.19
Without MRS	3E-5[b]	--	C.42
With MRS	3E-5[b]	--	C.44
Total Postclosure	--	5.0E-11[c]	--
Transportation			
Without MRS	5[b]	--	C.42
With MRS	10[b]	--	C.44

Table C.109 (Continued)

Fuel Cycle Element	Total Accident Risk (person-rem/yr) Unscaled	Scaled (1/GWe)[a]	Table
Plutonium Oxide			
Truck	--	0.0013	C.70
Rail	--	0.066	C.70
Spent Fuel			
Truck			
in 1975	240[b]	--	C.35
in 1985	1500[b]	--	C.35
Rail	--	0.16	C.70
	--	0.16	C.70
	--	0.078	C.70
	--	0.013	C.70
	--	0.0093	C.70
	--	7.1E-4	C.70
	--	5.6E-5	C.70
	--	8.4E-6	C.70
	--	8.4E-6	C.70
	--	2.6E-6	C.70
in 1975	110[b]	--	C.35
in 1985	4000[b]	--	C.35
HLW			
Rail	--	0.042	C.70
	--	0.0023	C.70
	--	8.4E-4	C.70
	--	2.8E-6	C.70
	--	2.4E-6	C.70

(a) Measured in terms of the annual requirements of a 1,000-MWe (1-GWe) LWR

(b) Converted to person-rem/yr using 5,000 person-rem/health effect

(c) From Erdmann et al. (1979), see Section C.6.

Table C.110 Preliminary occupational risk estimates for postulated accidents at a repository in tuff for preclosure operations phase of geologic waste disposal (see Tables C.18 and C.19) (Daling et al. 1990)

Accident Scenario	Frequency (1/yr)	Worker Dose (person-rem)	Worker Risk (person-rem/yr)
Natural Phenomena			
Flood	0.010	5.0E-10	5.0E-12
Earthquake	< 0.0013	0.37	< 4.8E-4
Tornado	< 9.1E-11	0.37	< 3.4E-11
Man-made Events			
Aircraft Impact	< 2.0E-10	5.5	< 1.1E-9
Nuclear Test	< 0.0010	0.37	< 3.7E-4
Operational Accidents			
Fuel Assembly Drop	0.10	0.0081	8.1E-4
Loading Dock Fire			
Spent Fuel	< 1.0E-7	3.5	< 3.5E-7
HLW	< 1.0E-7	0.6	< 6.0E-8
Waste Handling Ramp Fire	< 1.0E-7	64	< 6.4E-6
Emplacement Drift Fire	< 1.0E-7	180	< 1.8E-5
Total			.0017

Appendix D

Safety Goal Policy Statement and Backfit Rule

Appendix D

Safety Goal Policy Statement and Backfit Rule

D.1 Safety Goals for the Operations of Nuclear Power Plants (51 FR 30028; August 21, 1986)

SUMMARY: This policy statement focuses on the risks to the public from nuclear power plant operation. Its objective is to establish goals that broadly define an acceptable level of radiological risk. In developing the policy statement, the NRC sponsored two public workshops during 1981, obtained public comments and held four public meetings during 1982, conducted a 2-year evaluation during 1983 to 1985, and received the views of its Advisory Committee on Reactor Safeguards.

The Commission has established two qualitative safety goals which are supported by two quantitative objectives. These two supporting objectives are based on the principle that nuclear risks should not be a significant addition to other societal risks. The Committee wants to make clear that no death attributable to nuclear power plant operation will ever be "acceptable" in the sense that the Committee would regard it as a routine or permissible event. The Committee is discussing acceptable risks, not acceptable deaths.

- The *qualitative safety* goals are as follows:
  - Individual members of the public should be provided a level of protection from the consequences of nuclear power plant operation such that individuals bear no significant additional risk to life and health.
  - Societal risks to life and health from nuclear power plant operation should be comparable to or less than the risks of generating electricity by viable competing technologies and should not be a significant addition to other societal risks.
- The following *quantitative objectives* are to be used in determining achievement of the above safety goals:
  - The risk to an average individual in the vicinity of a nuclear power plant of prompt facilities that might result from reactor accidents should not exceed one-tenth of one percent (0.1 percent) of the sum of prompt fatality risks resulting from other accidents to which members of the U.S. population are generally exposed.
  - The risk to the population in the area near a nuclear power plant of cancer fatalities that might result from nuclear power plant operation should not exceed one-tenth of one percent (0.1 percent) of the sum of cancer fatality risks resulting from all other causes.

EFFECTIVE DATE: August 4, 1986.

SUPPLEMENTARY INFORMATION: The following presents the Commission's Final Policy Statement on Safety Goals for the Operation of Nuclear Power Plants:

I. Introduction

A. Purpose and Scope

In its response to the recommendations of the President's Commission on the Accident at three Mile Island, the Nuclear Regulatory Commission (NRC) stated that it was "prepared to move forward with an explicit policy statement on safety philosophy and the role of safety-cost tradeoffs in the NRC safety decisions." This policy statement is the result.

Current regulatory practices are believed to ensure that the basic statutory requirement, adequate protection of the public, is met. Nevertheless, current practices could be improved to provide a better means for testing the adequacy of and need for current and proposed regulatory requirements. The Commission believes that such improvement could lead to a more coherent and consistent regulation of nuclear power plants, a more predictable regulatory process, a public understanding of the regulatory criteria that the NRC applies, and public confidence in the safety of operating plants. This statement of NRC safety policy expresses the Commission's views on the level of risks to public health and safety that the industry should strive for in its nuclear power plant.

This policy statement focuses on the risks to the public from nuclear power plant operation. These are the risks from release of radioactive materials from the reactor to the environment from normal operations as well as from accidents. The Commission will refer to these risks as the risks of nuclear power plant operation. The risks from the nuclear fuel cycle are not included in the safety goals.

These fuel cycle risks have been considered in their own right and determined to be quite small. They will continue to receive careful consideration. The possible effects of sabotage or diversion of nuclear material are also not presently included in the safety goals. At present there is no basis on which to provide a measure of risk on these matters. It is the Commission's intention that everything that is needed will be done to keep these types of risks at their present very low level; and it is the Commission's expectation that efforts on this point will continue to be successful. With these exceptions, it is the Commission's intent that the risks from all the various initiating mechanisms be taken into account to the best of the capability of current evaluation techniques.

In the evaluation of nuclear power plant operation, the staff considers several types of releases. Current NRC practice addresses the risks to the public resulting from operating nuclear power plants. Before a nuclear power plant is licensed to operate, NRC prepares an environmental impact assessment which includes an evaluation of the radiological impacts of routine operation of the plant and accidents on the population in the region around the plant site. The assessment undergoes public comment and may be extensively probed in adjudicatory hearings. For all plants licensed to operate, NRC has found that there will be no measurable radiological impact on any member of the public from routine operation of the plant. (Reference: NRC staff calculation of radiological impact on humans contained in Final Environmental Statements for specific nuclear power plants: e.g., NUREG-0779, NUREG-0812, and NUREG-0854.)

The objective of the Commission's policy statement is to establish goals that broadly define an acceptable level of radiological risk that might be imposed on the public as a result of nuclear power plant operation. While this policy statement includes the risks of normal operation, as well as accidents, the Commission believes that because of compliance with Federal Radiation Council (FRC) guidance, (40 CFR Part 190), and NRC's regulations (10 CFR Part 20 and Appendix I to Part 50), the risks from routine emissions are small compared to the safety goals. Therefore, the Commission believes that these risks need not be routinely analyzed on a case-by-case basis in order to demonstrate conformance with the safety goals.

B. Development of this Statement of Safety Policy

In developing the policy statement, the Commission solicited and benefited from the information and suggestions provided by workshop discussions. NRC-sponsored workshops were held in Palo Alto, California, on April 1-3, 1981 and in Harpers Ferry, West Virginia, on July 23-24, 1981. The first workshop addressed general issues involved in developing safety goals. The second workshop focused on a discussion paper which presented proposed safety goals. Both workshops featured discussions among knowledgeable persons drawn from industry, public interest groups, universities, and elsewhere, who represented a broad range of perspectives and disciplines.

The NRC Office of Policy Evaluation submitted to the Commission for its consideration a Discussion Paper on Safety Goals for Nuclear Power Plants in November 1981 and a revised safety goal report in July 1982.

The Commission also took into consideration the comments and suggestions received from the public in response to the proposed Policy Statement on "Safety Goals for Nuclear Power Plants," published on February 17, 1982 (47 FR 7023). Following public comment, a revised Policy Statement was issued on march 14, 1983 (48 FR 10772) and a 2-year evaluation period began.

The Commission used the staff report and its recommendations that resulted from the 2-year evaluation of safety goals in developing this final Policy Statement. Additionally, the Commission had benefit of further comments from its Advisory Committee on Reactor Safeguards (ACRS) and by senior NRC management.

Based on the results of this information, the Commission has determined that the qualitative safety goals will remain unchanged from its March 1983 revised policy statement and the Commission adopts these as its safety goals for the operation of nuclear power plants.

II. Qualitative Safety Goals

The Commission has decided to adopt qualitative safety goals that are supported by quantitative health effects objectives for use in the regulatory decisionmaking process. The Commission's first quantitative safety goal is that risk from nuclear power plant operation should not be a significant contributor to a person's risk to accidental death or injury. The intent is to require such a level of safety that individuals living or working near nuclear power plants should be able to go about their daily lives without special concern by virtue of their proximity to these plants. Thus, the Commission's first safety goal is -

Individual members of the public should be provided a level of protection from the consequences of nuclear power plant operation such that individuals bear no significant additional risk to life and health.

Even though protection of individual members of the public inherently provides substantial societal protection, the Commission also decided that a limit should be placed on the societal risks posed by nuclear power plant operation. The Commission also believes that the risks of nuclear power plant operation should be comparable to or less than the risks from other viable means of generating the same quantity of electrical energy. Thus, the Commission's second safety goal is -

Societal risk to life and health from nuclear power plant operation should be comparable to or less than the risks of generating electricity by viable competing technologies and should not be a significant addition to other societal risks.

The broad spectrum of expert opinion on the risks posed by electrical generation by coal and the absence of authoritative data make it impractical to calibrate nuclear safety goals by comparing them with coal risks based on what we know today. However, the Commission has established the quantitative health effects objectives in such a way that nuclear risks are not a significant addition to other societal risks.

Severe core damage accidents can lead to more serious accidents with the potential for life-threatening offsite release of radiation, for evacuation of members of the public, and for contamination of public property. Apart from their health and safety consequences, severe core damage accidents can erode public confidence in the safety of nuclear power and can lead to further instability and unpredictability for the industry. In order to avoid these adverse consequences, the Commission intends to continue to pursue a regulatory program that has as its objective providing reasonable assurance, while giving appropriate consideration to the uncertainties involved, that a severe core damage accident will not occur at a U.S. nuclear power plant.

III. Quantitative Objectives Used to Gauge Achievement of The Safety Goals

A. General Considerations

The quantitative health effects objectives establish NRC guidance for public protection which nuclear plant designers and operators should strive to achieve. A key element in formulating a qualitative safety goal whose achievement is measured by quantitative health effects objectives is to understand both the strengths and limitations of the techniques by which one judges whether the qualitative safety goal has been met.

A major step forward in the development and refinement of accident risk quantification was taken in the Reactor Safety Study (WASH-1400) completed in 1975. The objective of the Study was "to try to reach some meaningful conclusions about the risk of nuclear accidents." The Study did not directly address the question of what level of risk from nuclear accidents was acceptable.

Since the completion of the Reactor Safety Study, further progress in developing probabilistic risk assessment and in accumulating relevant data has led to a recognition that it is feasible to begin to use quantitative safety objectives for limited purposes. However, because of the sizable uncertainties still present in the methods and the gaps in the data base--essential elements needed to gauge whether the objectives have been achieved--the quantitative objectives should be viewed as aiming points or numerical benchmarks of performance. In particular, because of the present limitations in the state of the art of quantitatively estimating risks, the quantitative health effects objectives are not a substitute for existing regulations.

The Commission recognizes the importance of mitigating the consequences of a core-melt accident and continues to emphasize features such as containment, siting in less populated areas, and emergency planning as integral parts of the defense-in-depth concept associated with its accident prevention and mitigation philosophy.

B. Quantitative Risk Objectives

The Commission wants to make clear at the beginning of this section that no death attributable to nuclear power plant operation will ever be "acceptable" in the sense that the Commission would regard it as a routine or permissible event. We are discussing acceptable risks, not acceptable deaths. In any fatal accident, a course of conduct posing an acceptable risk at one moment results in an unacceptable death moments later. This is true whether one speaks of driving, swimming, flying, or generating electricity from coal. Each of these activities poses a calculable risk to society and to individuals. Some of those who accept the risk (or are part of a society that accepts risk) do not survive it. We intend that no such accidents will occur, but the possibility cannot be entirely eliminated. Furthermore, individual and societal risks from nuclear power plants are generally estimated to be considerably less than the risk that society is now exposed to from each of the other activities mentioned above.

C. Health Effects--Prompt and Latent Cancer Mortality Risks

The Commission has decided to adopt the following two health effects as the quantitative objectives concerning mortality risks to be used in determining achievement of the qualitative safety goals -

The risk to an average individual in the vicinity of a nuclear power plant of prompt fatalities that might result from reactor accidents should not exceed one-tenth of one percent (0.1 percent) of the sum of prompt fatality risks resulting from other accidents to which members of the U.S. population are generally exposed.

The risk to the population the area near a nuclear power plant of cancer fatalities that might result from nuclear power plant operation should not exceed one-tenth of one percent (0.1 percent) of the sum of cancer fatality risks resulting from all other causes.

The Commission believes that this ratio of 0.1 percent appropriately reflects both of the qualitative goals--to provide that individuals and society bear no significant additional risk. However, this does not necessarily mean that an additional risk that exceeds 0.1 percent would by itself constitute a significant additional risk. The 0.1 percent ratio to other risks is low enough to support an expectation that people living or working near nuclear power plants would have no special concern due to the plant's proximity.

The average individual in the vicinity of the plant is defined as the average individual biologically (in terms of age and other risk factors) and locationally who resides within a mile from the plant site boundary. This means that the average individual is found by accumulating the estimated individual risks and dividing by the number of individuals residing in the vicinity of the plant.

In applying the objective for individual risk of prompt fatality, the Commission has defined the vicinity as the area within one (1) mile of the nuclear power plant site boundary, since calculations of the consequences of major reactor accidents suggest that individuals within a mile of the plant site boundary would generally be subject to the greatest risk of prompt death attributable to radiological causes. If there are no individuals residing within a mile of the plant boundary, an individual should, for evaluation purposes, be assumed to reside one (1) mile from the site boundary.

In applying the objective for cancer fatalities as a population guideline for individuals in the area near the plant, the Commission has defined the population generally considered subject to significant risk as the population within ten (10) miles of the plant site. The bulk of significant exposures of the population to radiation would be concentrated within this distance, and thus this is the appropriate population for comparison with cancer fatality risks from all other causes. This objective would ensure that the estimated increase in the risk of delayed cancer fatalities from all potential radiation releases at a typical plant would be no more than a small fraction of the year-to-year normal variation in the expected cancer deaths from nonnuclear causes. Moreover, the prompt fatality objective for protecting individuals generally provides even greater protection to the population as a whole. That is, if the quantitative objective for prompt fatality is met for individuals in the immediate vicinity of the plant, the estimated risk of delayed cancer fatality to persons within ten (10) miles of the plant and beyond would generally be much lower than the quantitative objective for cancer fatality. Thus, compliance with the prompt fatality objective applied to individuals close to the plant would generally mean that the aggregate estimated societal risk would be a number of times lower than it would be if compliance with just the objective applied to the population as a whole were involved. The distance foe averaging the cancer fatality risk was taken as 50 miles in the 1983 policy statement. The change to ten (10) miles could be viewed to provide additional protection to

individuals in the vicinity of the plant, although analyses indicate that this objective for cancer fatality will not be the controlling one. It also provides more representative societal protection, since the risk to the people beyond ten (10) miles will be less than the risk to the people within ten (10) miles.

IV. Treatment of Uncertainties

The Commission is aware that uncertainties are not caused by use of quantitative methodology in decisionmaking but are merely highlighted through use of the quantification process. Confidence in the use of probabilistic and risk assessment techniques has steadily improved since the time these were used in the Reactor Safety Study. In fact, through use of quantitative techniques, important uncertainties have been and continue to be brought into better focus and may even be reduced compared to those that would remain with sole reliance on deterministic decisionmaking. To the extent practicable, the Commission intends to ensure that the quantitative techniques used for regulatory decisionmaking take into account the potential uncertainties that exist so that an estimate can be made on the confidence level to be ascribed to the quantitative results.

The Commission has adopted the use of mean estimates for purposes of implementing the quantitative objectives of this safety goal policy (i.e., the mortality risk objectives). Use of the mean estimates comports with the customary practices for cost-benefit analyses and it is the correct usage for purposes of the mortality risk comparisons. Use of mean estimated does not however resolve the need to quantify (to the extent reasonable) and understand those important uncertainties involved in the reactor accident risk predictions. A number of uncertainties (e.g., thermal-hydraulic assumptions and the phenomenology of core-melt progression, fission product release and transport, and containment loads and performance) arise because of a direct lack of severe accident experience or knowledge of accident phenomenology along with data related to probability distributions.

In such a situation, it is necessary that proper attention be given not only to the range of uncertainty surrounding probabilistic estimates, but also to the phenomenology that most influences the uncertainties. For this reason, sensitivity studies should be performed to determine those uncertainties most important to the probabilistic estimate. The results of sensitivity of studies should be displayed showing, for example, the range of variation together with the underlying science or engineering assumptions that dominate this variation. Depending on the decision needs, the probabilistic results should also be reasonably balanced and supported through use of deterministic arguments. In this way, judgements can be made by the decisionmaker about the degree of confidence to be given to these estimates and assumptions. This is a key part of the process of determining the degree of regulatory conservatism that may be warranted for particular decisions. This defense-in-depth approach is expected to continue to ensure the protection of public health and safety.

V. Guidelines for Regulatory Implementation

The Commission approves use of the qualitative safety goals, including use of the quantitative health effects objectives in the regulatory decisionmaking process. The Commission recognizes that the safety goal can provide a useful tool by which the adequacy of regulations or regulatory decisions regarding changes to the regulations can be judged. Likewise, the safety goals could be of benefit in the much more difficult task of assessing whether existing plants, designed, constructed and operated to comply with past and current regulations, conform adequately with the intent of the safety goal policy.

However, in order to do this, the staff will require specific guidelines to use as a basis for determining whether a level of safety ascribed to a plant is consistent with the safety goal policy. As a separate matter, the Commission intends to review and approve guidance to the staff regarding such determinations. It is currently envisioned that this guidance would address matters such as plant performance guidelines, indicators for operational performance, and guidelines for conduct

of cost-benefit analyses. This guidance would be derived from additional studies conducted by the staff and resulting in recommendations to the Commission. The guidance would be based on the following general performance guideline which is proposed by the commission for further staff examination -

Consistent with the traditional defense-in-depth approach and the accident mitigation philosophy requiring reliable performance of containment systems, the overall mean frequency of a large release of radioactive materials to the environment from a reactor accident should be less than 1 in 1,000,000 per year of reactor operation.

To provide adequate protection of the public health and safety, current NRC regulations require conservatism in design, construction, testing, operation, and maintenance of nuclear power plants. A defense-in-depth approach has been mandated in order to prevent accidents from happening and to mitigate their consequences. Siting in less populated areas is emphasized. Furthermore, emergency response capabilities are mandated to provide additional defense-in-depth protection to the surrounding population.

These safety goals and these implementation guidelines are not meant as a substitute for NRC's regulations and do not relieve nuclear power plant permittees and licensees from complying with regulations. Nor are the safety goals and these implementation guidelines in and of themselves meant to serve as a sole basis for licensing decisions. However, if pursuant to these guidelines, information is developed that is applicable to a particular licensing decision, it may be considered as one factor in the licensing decision.

The additional views of Commissioner Asselstine and the separate views of Commissioner Bernthal are attached.

Dated at Washington, D.C., this 30th day of July 1986.

For the Nuclear Regulatory Commission. **Lando W. Zech, Jr.**, *Chairman*.

Additional Views by Commissioner Asselstine on the Safety Goals Policy Statement

The commercial nuclear power industry started rather slowly and cautiously in the early 1960's. By the late 1960's and early 1970's, the growth of the industry reached a feverish pace. New orders were coming in for regulatory review on almost a weekly basis. The result was the designs of the plants outpaced operational experience and the development of safety standards. As experience was gained in operational characteristics and in safety reviews, safety standards were developed or modified with a general trend toward stricter requirements. Thus, in the early 1970's, the industry demanded to know "how safe is safe enough." In this Safety Goal Policy Statement, the Commission is reaching a first attempt at answering the question. Much credit should go to Chairman Palladino's efforts over the past five (5) years to develop this policy statement. I approve this policy statement but believe it needs to go further. There are four additional aspects which should have been addressed by the policy statement.

Containment Performance

First, I believe the Commission should have developed a policy on the relative emphasis to be given to accident prevention and accident mitigation. Such guidance is necessary to ensure that the principle of defense-in-depth is maintained. The Commission's Advisory Committee on Reactor Safeguards has repeatedly urged the Commission to do so. As a step in that direction, I offered for Commission consideration the following containment performance criterion:

In order to assure a proper balance between accident prevention and accident mitigation, the mean frequency of containment failure in the event of a severe core damage accident should be less than 1 in 100 severe core damage accidents.

Since the Chernobyl accident, the nuclear industry has been trying to distance itself from the Chernobyl accident on the basis of the expected performance of the containments around the U.S. power reactors. Unfortunately, the industry and the Commission are unwilling to commit to a level of performance for the containments.

The argument has been made that we do not know how to develop containment performance criteria (accident mitigation) because core meltdown phenomena and containment response thereto are very complex and involve substantial uncertainties. On the other hand, to measure how close a plant comes to the quantitative guidelines contained in this policy statement and to perform analyses required by the Commission's backfit rule, one must perform just those kinds of analyses. I find these positions inconsistent.

The other argument against a containment performance criterion is that such a standard would overspecify the safety goal. However, a containment performance objective is an element of ensuring that the principle of defense-in-depth is maintained. Since we cannot rule out core meltdown accidents in the foreseeable future, given the current level of safety, I believe it unwise not to establish an expectation on the performance of the final barrier to a substantial release of radioactive materials to the environment, given a core meltdown.

General Performance Guideline

While I have previously supported an objective of reducing the risks to an as low as reasonably achievable level, the general performance guideline articulated in this policy (i.e., "...the overall mean frequency of a large release of radioactive materials to the environment from a reactor accident should be less than 1 in 1,000,000 per year of reactor operation") is a suitable compromise. I believe it is an objective that is consistent with the recommendations of the Commission's chief safety officer and our Director of Research, and past urgings of the Advisory Committee on Reactor Safeguards. Unfortunately, the Commission stopped short of adopting this guideline as a performance objective in the policy statement, but I am encouraged that the Commission is willing at least to examine the possibility of adopting it. Achieving such a standard coupled with the containment performance objective given above would go a long way toward ensuring that the operating reactors successfully complete their useful lives and that the nuclear option remains a viable component of the nation's energy mix.

In addition to preferring adoption of this standard now, I also believe the Commission needs to define a "large release" of radioactive materials. I would have defined it as "a release that would result in a whole body dose of 5 rem to an individual located at the site boundary." This would be consistent with the EPA's emergency planning Protective Action Guidelines and with the level proposed by the NRC staff for defining an Extraordinary Nuclear Occurrence under the Price-Anderson Act. In adopting such a definition, the Commission would be saying that its objective is to ensure that there is no more than a 1 in 1,000,000 chance per year that the public would have been to be evacuated from the vicinity of a nuclear reactor and that the waiver of defenses provisions of the Price-Anderson Act would be invoked. I believe this to be an appropriate objective in ensuring that there is no undue risk to the public health and safety associated with nuclear power.

Cost-Benefit Analyses

I believe it is long overdue for the Commission to decide the appropriate way to conduct cost-benefit analyses. The Commission's own regulations require these analyses, which play a substantial role in the decisionmaking on whether to improve safety. Yet, the commission continues to postpone addressing this fundamental issue.

Future Reactors

In my view, this safety goal policy statement has been developed with a steady eye on the apparent level of safety already achieved by most of operating reactors. That level has been arrived at by a piecemeal approach to designing, constructing

and upgrading of the plants over the years as experience was gained with the plants and as the results of required research became available. Given the performance of the current generation of plants. I believe a safety goal for these plants is not good enough for the future. This policy statement should have had a separate goal that would require substantially better plants for the next generation. To argue that the level of safety achieved by plant designs that are over 10 years old is good enough for the next generation is to have little faith in the ingenuity of engineers and in the potential for nuclear technology. I would have required the next generation of plants to be substantially safer than the currently operating plants.

Separate Views of Commissioner Bernthal on Safety Goals Policy

I do not disapprove of what has been said in this policy statement, but too much remains unsaid. The public is understandably desirous of reassurance since Chernobyl: the NRC staff needs clear guidance to carry out its responsibilities to assure public health and safety; the nuclear industry needs to plan for the future. All want and deserve to see clear, unambiguous, practical safety objectives that provide the Commission's answer to the question, "How safe is safe enough?" at U.S. nuclear power plants. The question remains unanswered.

It is unrealistic for the Commission to expect that society, for the foreseeable future, will judge nuclear power by the same standard as it does all other risks. The issue today is not so much calculated risk; the issue is public acceptance and, consistent with the intent of Congress, preservation of the nuclear option.

In these early decades of nuclear power, TMI-style incidents must be rendered so rare that we would expect to recount such an event only to our grandchildren. For today's population of reactors, that implies a probability for severe core damage of 10^{-4} per reactor year; for the longer term, it implies something better. I see this as a straightforward policy conclusion that every newspaper editor in the country understands only too well. If the Commission fails to set (and realize) this objective, then the nuclear option will cease to credible before the end of the century. In other words, if TMI-style events were to occur with 10-15 year regularity, public acceptance of nuclear power would almost certainly fail.

And while the Commission's primary charge is to protect public health and safety, it is also the clear intent of Congress that the Commission, if possible, regulate in a way that preserves rather than jeopardizes the nuclear option. So, for example, if the Commission were to find 100 percent confidence in some impervious containment design, but ignored what was inside the containment, the primary mandate would be satisfied, but in all likelihood, the second would not. Consistent with the Commission's long-standing defense-in-depth philosophy, both core-melt and containment performance criteria should therefore be clearly stated parts of the Commission's safety goals.

In short, this pudding lacks a theme. Meaningful assurance to the public; substantive guidance to the NRC staff; the regulatory path to the future for the industry--all these should be provided by plainly stating that, consistent with the Commission's "defense-in-depth" philosophy:

(1) Severe core-damage accidents should not be expected, on average, to occur in the U.S. more than once in 100 years:

(2) Containment performance at nuclear power plants should be such that severe accidents with substantial offsite damages are not expected, on average, to occur in the U.S. more than one in 1,000 years:

(3) The goal for offsite consequences should be expected to be met after conservative considerations of the uncertainties associated with the estimated frequency of severe core-damage and the estimated mitigation thereof by containment.[a]

The term "substantial offsite damages" would correspond to the Commission's legal definition of "extraordinary nuclear occurrence." "Conservative consideration of associated uncertainties" should offer at least 90 percent confidence (typical good engineering judgment, I would hope) that the offsite release goal is met.

The broad core-melt and offsite-release goals should be met "for the average power plant"; i.e., for the aggregate of U.S. power plants. The decision to fix or not to fix a specific plant would then depend on achieving "the goal for offsite consequences." As a practical matter, this offsite societal risk objective would (and should) be significantly dependent on site-specific population density.

The absence of such explicit population density considerations in the Commission's 0.1 percent goals for offsite consequences deserves careful thought. Is it reasonable that Zion and Palo Verde, for example, be assigned the same theoretical "standard person" risk, even though they pose considerably different risks for the U.S. population as a whole? As they stand, these 0.1 percent goals do not explicitly include population density considerations; a power plant could be located in Central Park and still meet the Commission's quantitative offsite release standard.

I believe the Commission's standards should preserve the important principle that the site-specific population density be quantitatively considered in formulating the Commission's societal risk objective; e.g., by requiring that for the *entire* U.S. population, the risk of fatal injury as a consequence of the U.S. nuclear power plant operations should not exceed some appropriate specified fraction of the sum of the expected risk of fatality form all other hazards to which members of the U.S. population are generally exposed.

I am further concerned by the arbitrary nature of the 0.1 percent incremental "societal" health risk standard adopted by the Commission, a concept grounded in a purely subjective assessment of what the public might accept. The Commission should seriously consider a more rational standard, tied statistically to the average variations in natural exposure to radiation from all other sources.

Finally, as noted in its introductory comments, the Commission long ago committed to "move forward with an explicit policy statement on safety philosophy and the role of safety-cost tradeoffs in NRC safety decisions." While this policy statement may not be very "explicit", as discussed above, it contains nothing at all on the subject of "'safety-cost' tradeoffs in NRC safety decisions." For example, *is* $1,000 per person-rem an appropriate cost-benefit standard for NRC regulatory action? While I have long argued that such fundamental decisions are more rightly the responsibility of Congress, the NRC staff continues to use its ad-hoc judgment in lieu of either the Commission or the Congress speaking to the issue.

In summary, while the Commission has produced a document which is not in conflict with my broad philosophy in such matters, I doubt that the public expected a philosophical dissertation, however erudite. It is a tribute to Chairman Palladino's efforts that the Commission has come this far. But the task remains unfinished.

(a) Interestingly enough the Commission has adopted proposed goals similar to the above core-melt and containment performance objectives-without clearly saying so. Taken together, the Commission's: (1) 0.1 percent offsite prompt fatality goals: (2) proposed 10^{-4} per-reactor-year "large offsite release" criterion: (3) commitment "to provide reasonable assurance...that a severe core-damage accident will not occur at a U.S. nuclear power plant" though they may be ill-defined, can be read to be more stringent than the plainly stated criteria suggested above.

D.2 Backfit Rule (10 CFR 50.109)

(a)(1) Backfitting is defined as the modification of or addition to systems, structures, components, or design of a facility; or the design approval or manufacturing license for a facility; or the procedures or organization required to design, construct or operate a facility; any of which may result from a new or amended provision in the Commission rules or the imposition of a regulatory staff position interpreting the Commission rules that is either new or different from a previously applicable staff position after:

(i) The date of issuance of the construction permit for the facility for facilities having construction permits issued after October 21, 1985; or

(ii) Six months before the date of docketing of the operating license application for the facility for facilities having construction permits issued before October 21, 1985; or

(iii) The date of issuance of the operating license for the facility for facilities having operating license; or

(iv) The date of issuance of the design approval under appendix M, N, or O of part 52.

(2) Except as provided in paragraph (a)(4) of this section, the Commission shall require a systematic and documented analysis pursuant to paragraph (c) of this section for backfits which it seeks to impose.

(3) Except as provided in paragraph (a)(4) of this section, the Commission shall require the backfitting of a facility only when it determines, based on the analysis described in paragraph (c) of this section, that there is a substantial increase in the overall protection of the public health and safety or the common defence and security to be derived from the backfit and that the direct and indirect costs if implementation for that facility are justified in view of this increased protection.

(4) The provisions of paragraphs (a)(2) and (a)(3) of this section are inapplicable and, therefore, backfit analysis is not required and the standards in paragraph (a)(3) of this section do not apply where the Commission or staff, as appropriate, finds and declares, with appropriated documented evaluation for its finding, either:

(i) That a modification is necessary to bring a facility into compliance with license or the rules or orders of the Commission, or into conformance with written commitments by the licensee; or

(ii) That regulatory action is necessary to ensure that the facility provides adequate protection to the health and safety of the public and is in accord with the common defense and security; or

(iii) That the regulatory action involves defining or redefining what level of protection to the public health and safety or common defense and security should be regarded as adequate.

(5) The Commission shall always require the backfitting of a facility if it determines that such regulatory action is necessary to ensure that the facility provides adequate protection to the health and safety or the common defense and security.

(6) The document evaluation required by paragraph (a)(4) of this section shall include a statement of the objectives of and reasons for the modification and the basis for invoking the exception. If immediately effective regulatory action is required, then the documented evaluation may follow rather than precede the regulatory action.

(7) If there are two or more ways to achieve compliance with a license or the rules or orders of the Commission, or with written licensee commitments, or there are two or more ways to reach a level of protection which is adequate, then ordinarily the applicant or licensee is free to choose the way which best suits its purposes. However, should it be necessary or appropriate for the Commission to prescribe a specific way to comply with its requirements or to achieve adequate protection, then cost may be a factor in selecting the way, provided that the objective of compliance or adequate protection is met.

(b) Paragraph (a)(3) of the section shall not apply to backfits imposed prior to October 21, 1985.

(c) In reaching the determination required by paragraph (a)(3) of this section, the Commission will consider how the backfit should be scheduling light of other ongoing regulatory activities at the facility and, in addition, will consider information available concerning any of the following factors as may be appropriate and any other information relevant and material to proposed backfit:

(1) Statement of the specific objectives that the proposed backfit is designed to achieve;

(2) General description of the activity that would be required by the licensee or applicant in order to complete the backfit;

(3) Potential change in the risk to the public from accidental off-site release of radioactive material;

(4) Potential impact on radiological exposure of facility employees;

(5) Installation and continuing costs associated with the backfit, including the cost of facility downtime or the cost of construction delay;

(6) The potential safety impact of changes in plant or operational complexity, including the relationship to proposed and existing regulatory requirements;

(7) The estimated resource burden on the NRC associated with the proposed backfit and the availability of such resources;

(8) The potential impact or differences in facility type, design or age on the relevancy and practicality of the proposed backfit;

(9) Whether the proposed backfit is interim or final and, if interim, the justification for imposing the proposed backfit on an interim basis.

(d) No licensing action will be withheld during the pendency of backfit analyses required by the commissions rules.

(e) The Executive Director for Operations shall be responsible for implementation of this section, and all analyses required by this section shall be approved by the Executive Director for Operations or his designee.

[54 FR 20610, June 6, 1988, as amended 54 FR 15398, April 18, 1989]

Appendix E

Index

Appendix E

Index

A

Section

Accident Frequency 5.6
Accidents
  non-reactor
    frequency C.2.1.1
    population dose factors C.2.1.2
    radiological risk ranking C.6
  reactor
    frequency 5.6
    population dose factors 5.7.1.1
Agreement States 4.1, 5.7.11
Antitrust 5.5.15, 5.7.15
Attributes
  algebraic signs 5.2
  best estimate/expected value 5.7
  identification 4.3, 5.5

B

Backfit
  definition 1.2.1
  regulatory analysis 2.2, 4.4
Best estimates 4.3

C

Chernobyl 5.7.3.1
Classification of facilities
  fuel cycle C.1.1
  non-fuel cycle C.1.2
Cleanup of materials licensee contamination incidents C.3, C.4
Computer codes
  ALLDOS C.6
  CAP-88 . . . . . 5.7.1.1
  COMPLY 5.7.1.1
  CRAC2 . . . . . 5.7.5
  DECON 5.7.5

Section
EXPAC C.11
FIRAC C.11
FORECAST . . . . . 5.6.3, 5.7.1, 5.7.2.2, 5.7.3.3, 5.7.5, 5.7.6.4, 5.7.4.1, 5.7.7, 5.7.7.1, 5.7.8, ... 5.7.9, 5.7.10, 5.7.11
GENII 5.7.1.1
HESAP A.1.1
IRRAS 5.6.1
MACCS 5.7.1.1, 5.7.5, C.10
NUCLARR 5.6.1
RECAP 5.7.7.1
SARA 5.6.1
TEMAC 5.4.3.3
TORAC C.11
CRGR
charter 2.3
regulatory analysis 1.2.1, 2.2, 2.3

D

Cumulative Accounting of Safety Improvements A.2
Decommissioning costs 5.7.6.1, 5.7.7.2
Definitions 1.2.1
Delphi technique 5.7.14
Discounting 5.7, 5.7.1.3, B.2
Dollars, conversion to common year 5.8

E

Energy Economic Data Base B.3
Emergency preparedness/response 5.7.1.1, C.8
Environmental impacts/considerations 5.5.17, 5.7.17
Example regulatory analyses C.8, C.9, C.10
Expected value 4.3
Expert judgement 5.6.2

G

General public costs 5.7.12
Gross domestic product price deflator 5.8

H

Section

Handbook
- history 1
- uses 1.1

Health effects
- Accident related 5.7.1.1
- monetary conversion factor 5.7.1.2

Human factors issues A.1
History of regulatory analysis 1

I

Improvements in knowledge 5.7.13
Individual plant examination reports 3, 5.6.1
Individual plant examination reports of external event reports 3, 5.6.1
Industry costs
- implementation 5.7.7
- operation 5.7.8
- use of industry risk and cost estimates A.3

Interdiction criteria 5.7.1.1, 5.7.5

L

Labor rates
- other government agencies 5.7.11
- NRC 5.7.9, 5.7.10

License renewal 5.7

M

Major regulatory analysis 2.4
Metric units 2.5
Monetary conversion factor for radiation exposure 5.7.1.2

N

NEPA 5.5.17, 5.7.17
Net-value measure 4.5
Non-reactor facilities
- fuel cycle

Section
fuel enrichment C.2.1.1, C.2.1.2, C.2.1.3, C.8
fuel/MOX fabrication C.2.1.1, C.2.1.2, C.2.1.3, C.2.3, C.2.4, C.2.5.1, C.4, C.6, C.8, C.11
fuel reprocessing C.2.1.1, C.2.1.7, C.2.1.3, C.2.3, C.6, C.8, C.11
geologic waste disposal C.2.1.1, C.2.1.2, C.2.1.3, C.2.2, C.2.3, C.2.4, C.5, C.6
MRS facility C.5
spent fuel/HLW/TRU
waste storage C.2.1.1, C.2.1.2, C.2.1.3, C.2.2, C.2.3, C.2.4, C.2.5.1, C.6, C.8, C.10, C.11
transportation C.2.1.1, C.2.1.3, C.2.2, C.2.4, C.2.5.1, C.5, C.6
uranium hexafluoride conversion C.2.1.1, C.2.1.2, C.2.1.3, C.2.5.1, C.4, C.6, C.8
uranium mining/milling C.2.1.1, C.2.1.2, C.2.1.3, C.2.5.1, C.4, C.6, C.8, C.9
non-fuel cycle
byproduct/source material manufacturing/distribution C.2.1.1, C.2.5.2, C.4, C.8
measurement/calibration/irradiation C.2.1.1
research/teaching/experimental/diagnostic/therapeutic C.2.1.1
service organizations C.2.1.1, C.2.5.2
NRC
implementation costs 5.5.9, 5.7.9
labor rates 5.7.9, 5.7.10
operation costs 5.5.10, 5.7.10
Non-radiological injuries 5.7.4.3

O

Occupational health/dose/risk . . . . . .
experience B.3
impacts 5.7.3, 5.7.4
non-reactor fuel cycle facilities C.2.3, C.2.4
OMB 1, 4.2, 5.7, B.2.1
Onsite property damage costs 5.7.6
Other considerations 5.7.18
Other (non-NRC) government costs 5.7.11

P

Plant specific backfit 1.2.1, 2.2
Plutonium oxide fabrication and reconstitution C.7
Premature facility closure 5.7.7.2
Price deflator conversions 5.8
Power reactors
numbers/lifetimes B.1
NUREG-1150 . . . . . 5.6.1
Property damage/costs
offsite 5.5.5, 5.7.5, C.2.5
onsite 5.5.6, 5.7.6, C.2.5

Section
Public health/dose/risk 5.7.1, 5.7.2, B.4, C.2.1, C.2.2
Probabilistic Risk Assessment 3, 5.4, 5.6

R

Ratio measure 5.2
RECAP 5.7.7.1
Regulatory analysis
backfit 2.2
CRGR 2.2, 2.3
cumulative safety improvements A.2
definition 1.2.1
history 1
level of detail 2.4
level of effort . . . . . .
major 2.4
standard analysis 2.4
required elements 4
steps 1.2.2
alternative identification 4.2
decision rationale 4.5
implementation 4.6
presentation of results 4.4
problem/objective statement 4.1
value-impact evaluation 4.3
when required 2.1
Regulatory efficiency 5.5.14
Relaxation of requirements 2.5
Replacement power costs (reactors)
long-term 5.7.6.2
short-term 5.7.7.1
Routine exposure 5.7.2

S

Safety analysis reports 5.6.1
Safeguards and security 5.5.16, 5.7.16
Safety goal evaluations 3, 4.1, 4.3, 4.4
Sensitivity/uncertainty analysis
error factors 5.7, 5.19
generally 4.3, 5.4
suggested approach for value-input analyses 5.4.4
Standard regulatory analysis 2.4, 5.3
Summary of value-impact results 5.8

T

Section
Taxes 5.5.12
Three Mile Island 5.7.3.1, 5.7.6.1
Transfer payments 4.3

V

Values/impacts
analysis 5.2
definitions 4.3
distributional effects 4.4, 5.2
summarization 5.8

Printed on recycled paper

Federal Recycling Program