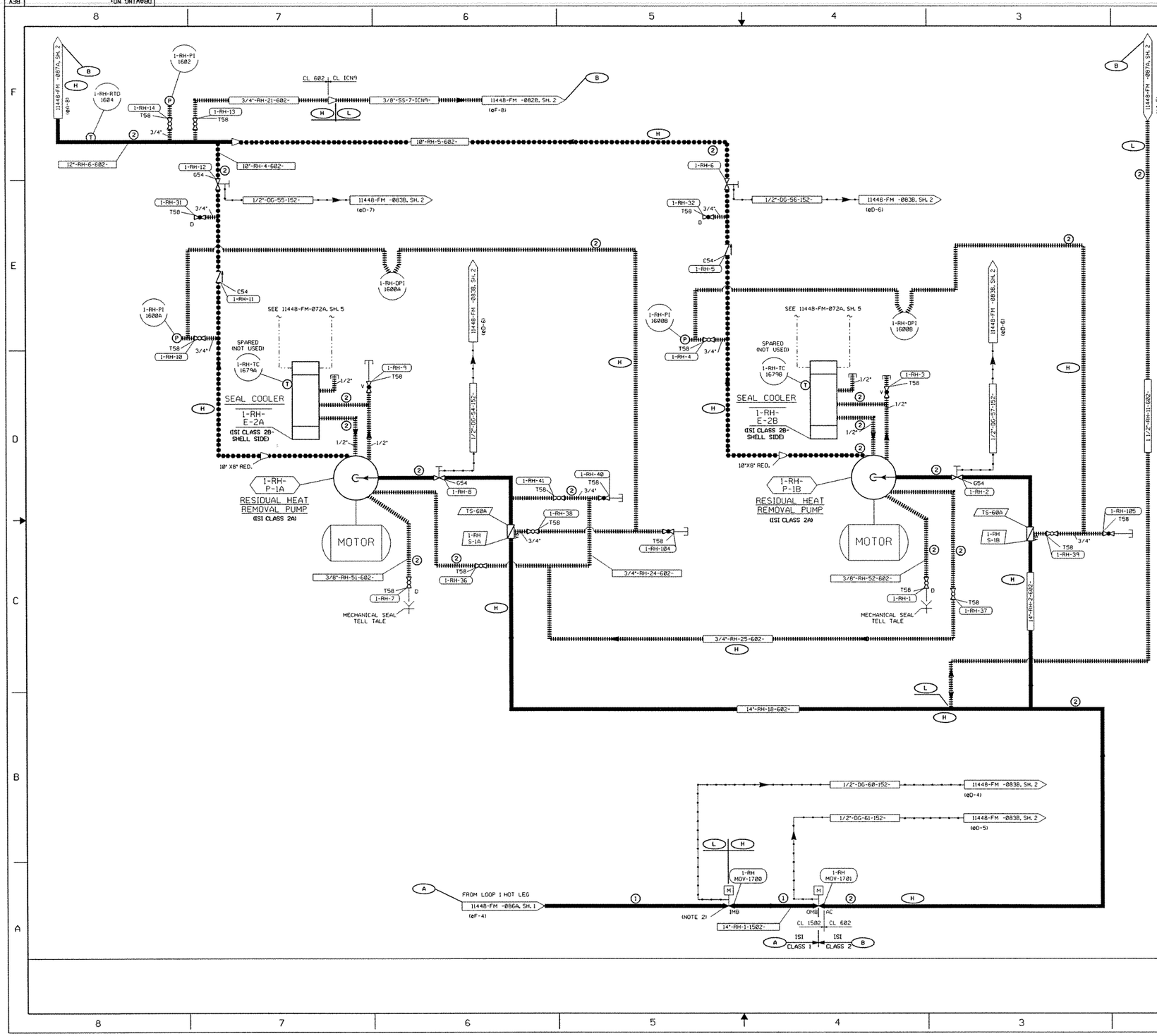

NOTES

1. VALVES ARE NORMALLY INSTALLED WITH FLOW UNDER SEAT.
2. REACTOR COOLANT PRESSURE INTERLOCK PREVENTS ISOLATION VALVE OPENING ABOVE SET PRESSURE.
3. LOCATE ISOLATION VALVE CLOSE TO MAIN HEADER.
4. FLANGES ARE 300 LB ST. STL. TYPE 316.
5. LEGEND:
   - O - LOCAL DRAIN CONNECTION
   - V - LOCAL VENT CONNECTION
   - OMB - OUTSIDE MISSILE BARRIER
   - IMB - INSIDE MISSILE BARRIER
   - ⊤ - PLUGGED CONNECTION

REFERENCE DRAWINGS

NUMBER	TITLE
01. 11448-FM-072A	FLOW/VON DIAGRAM,COMPONENT COOLING WATER SYSTEM
02. 11448-FM-082B	FLOW/VON DIAGRAM,SAMPLING SYSTEM
03. 11448-FM-083B	FLOW/VON DIAGRAM,VENT & DRAIN SYSTEM
04. 11448-FM-084A	FLOW/VON DIAGRAM,CONTAINMENT SPRAY SYSTEM
05. 11448-FM-086A	FLOW/VON DIAGRAM,REACTOR COOLANT SYSTEM
06. 11448-FM-086B	FLOW/VON DIAGRAM,REACTOR COOLANT SYSTEM
07. 11448-FM-088C	FLOW/VON DIAGRAM,CHEM & VOLUME CONTROL SYSTEM
08. 11448-FM-089B	FLOW/VON DIAGRAM,SAFETY INJECTION SYSTEM

BYPRODUCT DRAWINGS

1. 11448-CBM-087A, SH.1	ISI CLASSIFICATION BOUNDARY DRAWING
2. 11448-SPM-087A, SH.1	ISI SYSTEM PRESSURE TESTING DRAWING

BYPRODUCT NOTES

(A) THE INCLUDED COMPONENTS HAVE BEEN CLASSIFIED ISI CLASS 1 PER 10CFR50.2-1991: REACTOR COOLANT PRESSURE BOUNDARY (RCPB) DEFINITION.

(B) THE INCLUDED COMPONENTS HAVE BEEN CLASSIFIED ISI CLASS 2 PER PARAGRAPH C.1.b(2) OF REGULATORY GUIDE 1.26 REV 3: SYSTEMS IMPORTANT TO SAFETY THAT ARE DESIGNED FOR RESIDUAL HEAT REMOVAL.

(H) HIGH SAFETY SIGNIFICANT PIPING.

(L) LOW SAFETY SIGNIFICANT PIPING.

FOR AN EXPLANATION OF THE LINE CODINGS AND SYMBOLS EMPLOYED, SEE 11448-CB-LS-4.

CONTINUATION DRAWING NUMBERS REFER TO FM OR FB DRAWINGS. THE CORRESPONDING CLASSIFICATION BOUNDARY DRAWINGS (CBM OR CBB) CAN BE DETERMINED BY SUBSTITUTING CBM OR CBB FOR FM OR FB.

CAUTION:
THE BACKGROUND PORTION OF THIS BYPRODUCT DRAWING IS FOR REFERENCE ONLY. THE BACKGROUND INFORMATION IS NOT CONTROLLED AND MAY NOT REFLECT THE ACTUAL PLANT CONFIGURATION. REFER TO THE LATEST FLOW/VALVE OPERATING NUMBERS DIAGRAM FOR CONTROLLED BACKGROUND INFORMATION.

REVISION DESCRIPTION

THIS BYPRODUCT DWG ISSUED PER THE FOLLOWING FLOW/VON DIAGRAM

FLOW/VON DRAWING NO:	REV.
11448-FM -087A	21

SH 1 OF 2

Dominion

NUCLEAR ENGINEERING
RICHMOND, VIRGINIA

ISI CLASSIFICATION BOUNDARY DWG INTERVAL-4
RESIDUAL HEAT REMOVAL SYSTEM
SURRY POWER STATION UNIT 1
VIRGINIA POWER

REVISION DESCRIPTION

INITIAL ISSUE. THIS DWG SUPERSEDES INTERVAL-3 PER ISI REVIEW. (DCR 04-1274)

CAD NO: C:\usr\dgn\S1087A1MCB4kc1

DRAWING NO: 11448-CBM-087A-4 REV 0

DSGN GWB | SCALE: NONE | UNLESS OTHERWISE NOTED | SH 1 OF 2

PC-MF3

WAYNE89
19-JUL-2004 09:43
C:\usr\dgn\S1087A1MCB4kc1

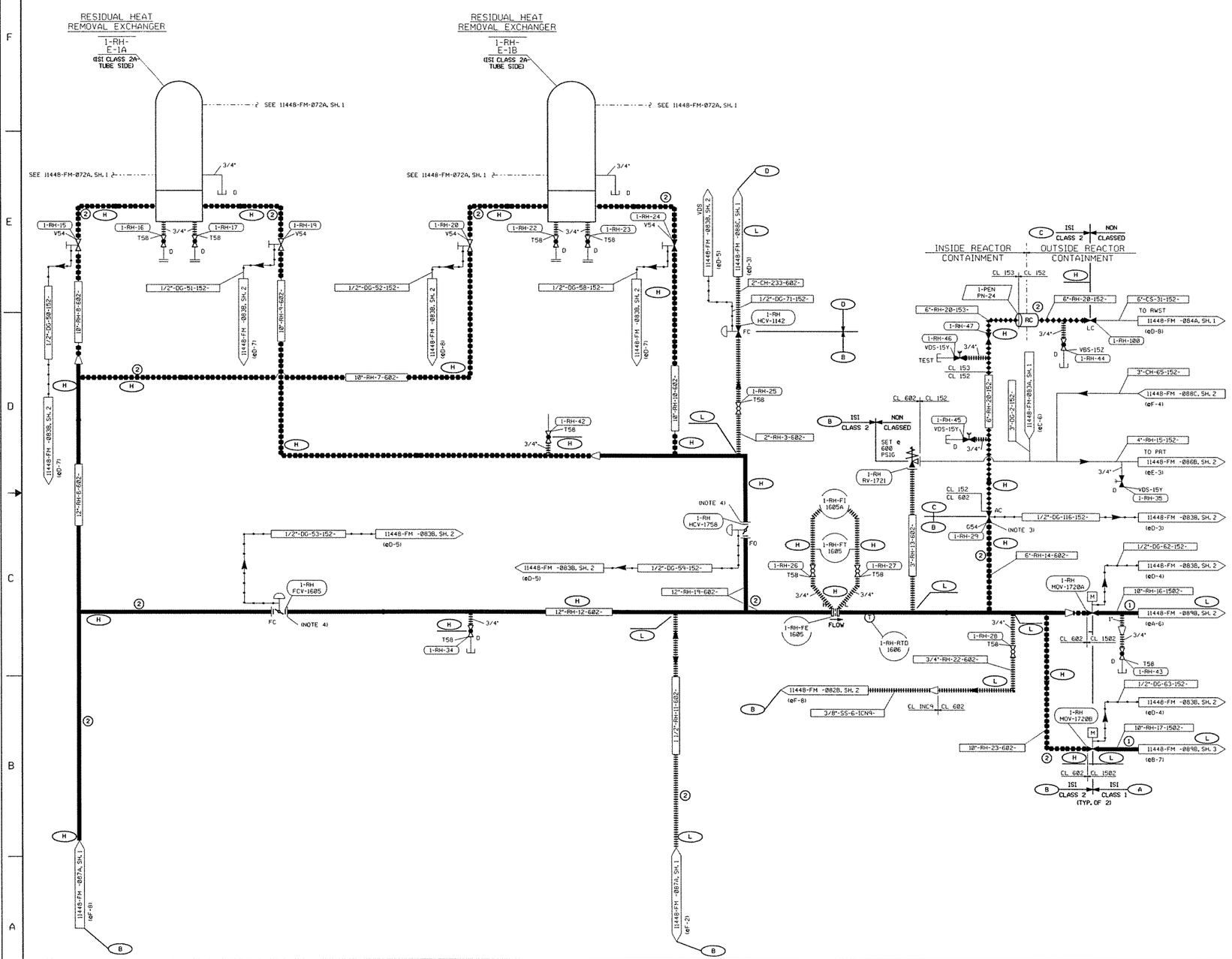

NOTES

1. FOR NOTES, SEE SHEET 1 OF THIS DRAWING.

REFERENCE DRAWINGS

NUMBER	TITLE
01. FOR ADDITIONAL REFERENCE DRAWINGS, SEE SHEET 1 OF THIS DRAWING.	
02. 11448-FM-072A	FLOW/VON DIAGRAM, COMPONENT COOLING WATER SYSTEM
03. 11448-FM-082B	FLOW/VON DIAGRAM, SAMPLING SYSTEM
04. 11448-FM-083B	FLOW/VON DIAGRAM, VENT & DRAIN SYSTEM
05. 11448-FM-084A	FLOW/VON DIAGRAM, CONTAINMENT SPRAY SYSTEM
06. 11448-FM-086B	FLOW/VON DIAGRAM, REACTOR COOLANT SYSTEM
07. 11448-FM-088C	FLOW/VON DIAGRAM, CHEM & VOLUME CONTROL SYSTEM
08. 11448-FM-089B	FLOW/VON DIAGRAM, SAFETY INJECTION SYSTEM

BYPRODUCT NOTES CONTINUED

(H) HIGH SAFETY SIGNIFICANT PIPING.

(L) LOW SAFETY SIGNIFICANT PIPING.

BYPRODUCT DRAWINGS

1. 11448-CBM-087A-3, SH. 2	ISI CLASSIFICATION BOUNDARY DRAWING
2. 11448-SPM-087A-3, SH. 2	ISI SYSTEM PRESSURE TESTING DRAWING

BYPRODUCT NOTES

(A) THE INCLUDED COMPONENTS HAVE BEEN CLASSIFIED ISI CLASS 1 PER 10CFR50.2-1991: REACTOR COOLANT PRESSURE BOUNDARY (RCPB) DEFINITION.

(B) THE INCLUDED COMPONENTS HAVE BEEN CLASSIFIED ISI CLASS 2 PER PARAGRAPH C.1.b(2) OF REGULATORY GUIDE 1.26 REV 3: SYSTEMS IMPORTANT TO SAFETY THAT ARE DESIGNED FOR RESIDUAL HEAT REMOVAL.

(C) THE INCLUDED COMPONENTS HAVE BEEN CLASSIFIED ISI CLASS 2 PER PARAGRAPH 2.3.1.2(1) OF ANSI N18.2a-1975: REACTOR CONTAINMENT COMPONENTS.

(D) THE INCLUDED COMPONENTS HAVE BEEN CLASSIFIED ISI CLASS 2 PER PARAGRAPH C.1.b(1) OF REGULATORY GUIDE 1.26 REV 3: SYSTEMS IMPORTANT TO SAFETY THAT ARE DESIGNED FOR REACTOR SHUTDOWN (REACTOR COOLANT MAKEUP AND LETDOWN).

BYPRODUCT NOTES CONTINUED ABOVE.

FOR AN EXPLANATION OF THE LINE CODINGS AND SYMBOLS EMPLOYED, SEE 11448-CB-LS-4.

CONTINUATION DRAWING NUMBERS REFER TO FM OR FB DRAWINGS. THE CORRESPONDING CLASSIFICATION BOUNDARY DRAWINGS (CBM OR CBB) CAN BE DETERMINED BY SUBSTITUTING CBM OR CBB FOR FM OR FB.

CAUTION:
THE BACKGROUND PORTION OF THIS BYPRODUCT DRAWING IS FOR REFERENCE ONLY. THE BACKGROUND INFORMATION IS NOT CONTROLLED AND MAY NOT REFLECT THE ACTUAL PLANT CONFIGURATION. REFER TO THE LATEST FLOW/VALVE OPERATING NUMBERS DIAGRAM FOR CONTROLLED BACKGROUND INFORMATION.

REVISION DESCRIPTION

THIS BYPRODUCT DWG ISSUED PER THE FOLLOWING FLOW/VON DIAGRAM	
FLOW/VON DRAWING NO: 11448-FM -087A	REV. 26
	SH 2 OF 2

Dominion

NUCLEAR ENGINEERING
RICHMOND, VIRGINIA

ISI CLASSIFICATION BOUNDARY DWG INTERVAL-4
RESIDUAL HEAT REMOVAL SYSTEM
SURRY POWER STATION UNIT 1
VIRGINIA POWER

REVISION DESCRIPTION
INITIAL ISSUE. THIS DWG SUPERSEDES INTERVAL-3 PER ISI REVIEW. (DCR 04-1275)

CAD NO: C:\usr\dgn\S1087A2MCB4kd1

DRAWING NO:	REV
11448-CBM-087A-4	0

DSGN	SCALE:		
GWB	NONE	UNLESS OTHERWISE NOTED	SH 2 OF 2

PC-MF3

WAYNE89
19-JUL-2004 09:43
C:\usr\dgn\S1087A2MCB4kd1

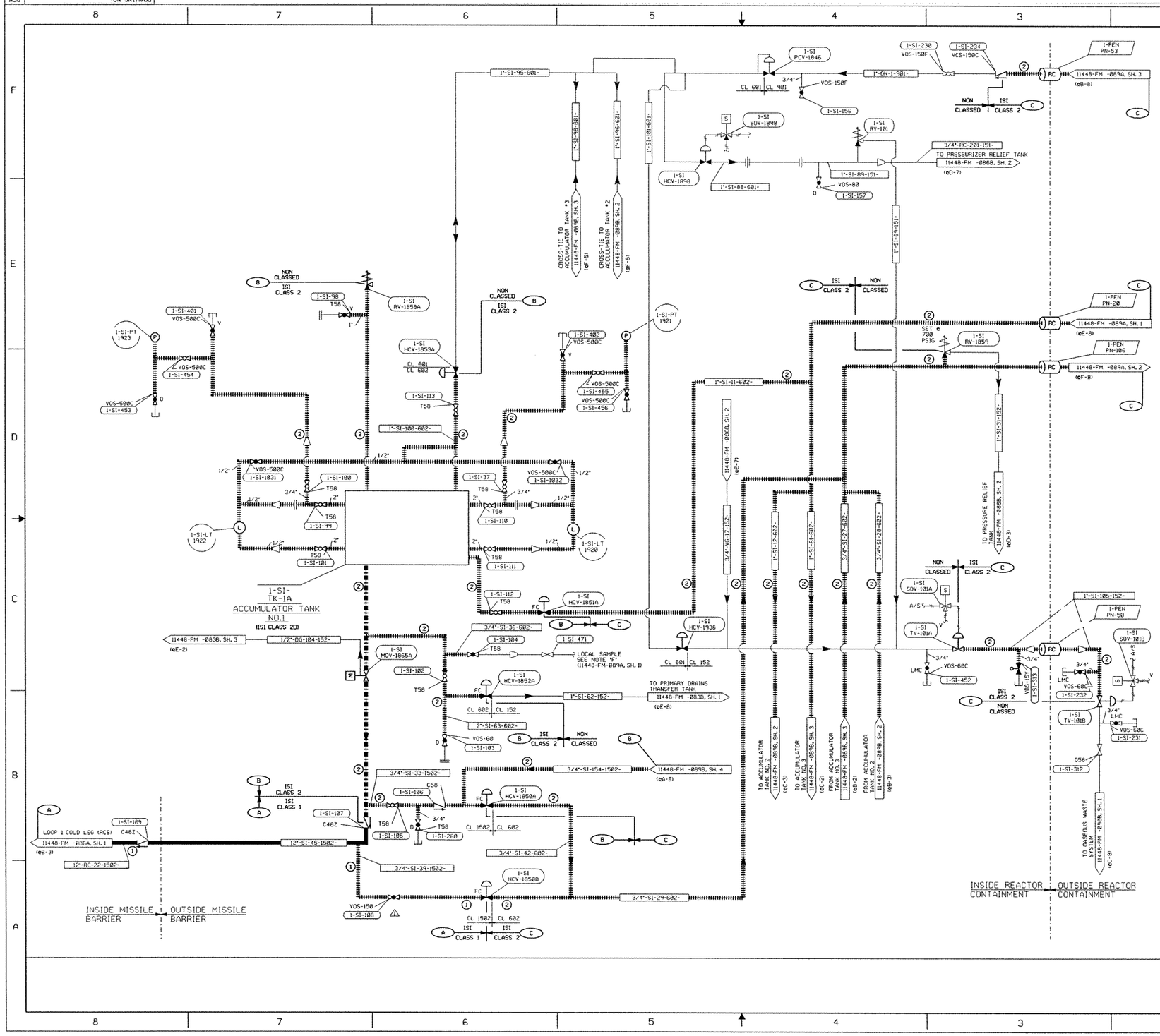

NOTES

1. FOR ADDITIONAL NOTES SEE 11448-FM-089A SHEET 1.
2. △ ADDITIONAL CHECK VALVES INSTALLED TO PROVIDE 2 VALVE ISOLATION OF SENSITIZED PIPING FROM REACTOR COOLANT BOUNDARY.
3. ◇ 1-SI-336 THRU 341 WELDED IN THROTTLED POSITION. ELECTRICAL CONNECTION WILL NOT BE REQUIRED.

REFERENCE DRAWINGS

NUMBER	TITLE
01. 11448-FM-083B	FLOW/VON DIAGRAM,VENT & DRAIN SYSTEM
02. 11448-FM-084A	FLOW/VON DIAGRAM,CONTAINMENT SPRAY SYSTEM
03. 11448-FM-086A	FLOW/VON DIAGRAM,REACTOR COOLANT SYSTEM
04. 11448-FM-086B	FLOW/VON DIAGRAM,REACTOR COOLANT SYSTEM
05. 11448-FM-087A	FLOW/VON DIAGRAM,RESIDUAL HEAT REMOVAL SYSTEM
06. 11448-FM-089A	FLOW/VON DIAGRAM,SAFETY INJECTION SYSTEM
07. 11448-FM-090B	FLOW/VON DIAGRAM,GASEOUS WASTE DISPOSAL SYSTEM

BYPRODUCT DRAWINGS

1. 11448-CBM-089B-3, SH.1 — ISI CLASSIFICATION BOUNDARY DRAWING
2. 11448-SPM-089B-3, SH.1 — ISI SYSTEM PRESSURE TESTING DRAWING

BYPRODUCT NOTES

(A) THE INCLUDED COMPONENTS HAVE BEEN CLASSIFIED ISI CLASS 1 PER 10CFR50.2-1995: REACTOR COOLANT PRESSURE BOUNDARY (RCPB) DEFINITION.

(B) THE INCLUDED COMPONENTS HAVE BEEN CLASSIFIED ISI CLASS 2 PER PARAGRAPH C.1.a OF REGULATORY GUIDE 1.26 REV 3: SYSTEMS IMPORTANT TO SAFETY THAT ARE DESIGNED FOR EMERGENCY CORE COOLING.

(C) THE INCLUDED COMPONENTS HAVE BEEN CLASSIFIED ISI CLASS 2 PER PARAGRAPH 2.3.1.2(1) OF ANSI N18.2a-1975: REACTOR CONTAINMENT COMPONENTS.

FOR AN EXPLANATION OF THE LINE CODINGS AND SYMBOLS EMPLOYED, SEE 11448-CB-LS-4.

CONTINUATION DRAWING NUMBERS REFER TO FM OR FB DRAWINGS. THE CORRESPONDING CLASSIFICATION BOUNDARY DRAWINGS (CBM OR CBB) CAN BE DETERMINED BY SUBSTITUTING CBM OR CBB FOR FM OR FB.

CAUTION:
THE BACKGROUND PORTION OF THIS BYPRODUCT DRAWING IS FOR REFERENCE ONLY. THE BACKGROUND INFORMATION IS NOT CONTROLLED AND MAY NOT REFLECT THE ACTUAL PLANT CONFIGURATION. REFER TO THE LATEST FLOW/VALVE OPERATING NUMBERS DIAGRAM FOR CONTROLLED BACKGROUND INFORMATION.

REVISION DESCRIPTION

THIS BYPRODUCT DWG ISSUED PER THE FOLLOWING FLOW/VON DIAGRAM

FLOW/VON DRAWING NO:	REV.
11448-FM -089B	29
	SH 1 OF 4

Dominion

NUCLEAR ENGINEERING
RICHMOND, VIRGINIA

ISI CLASSIFICATION BOUNDARY DWG INTERVAL-4
SAFETY INJECTION SYSTEM
SURRY POWER STATION UNIT 1
VIRGINIA POWER

REVISION DESCRIPTION
INITIAL ISSUE. THIS DWG SUPERSEDES INTERVAL-3 PER ISI REVIEW. (DCR 04-1287)

CAD NO: C:\usr\dgn\S1089B1MCB4nk1

DRAWING NO:	REV
11448-CBM-089B-4	0

DSGN	GWB	SCALE: NONE	UNLESS OTHERWISE NOTED	SH 1 OF 4

PC-MF3

WAYNE89
09-AUG-2004 13:37
C:\usr\dgn\S1089B1MCB4nk1

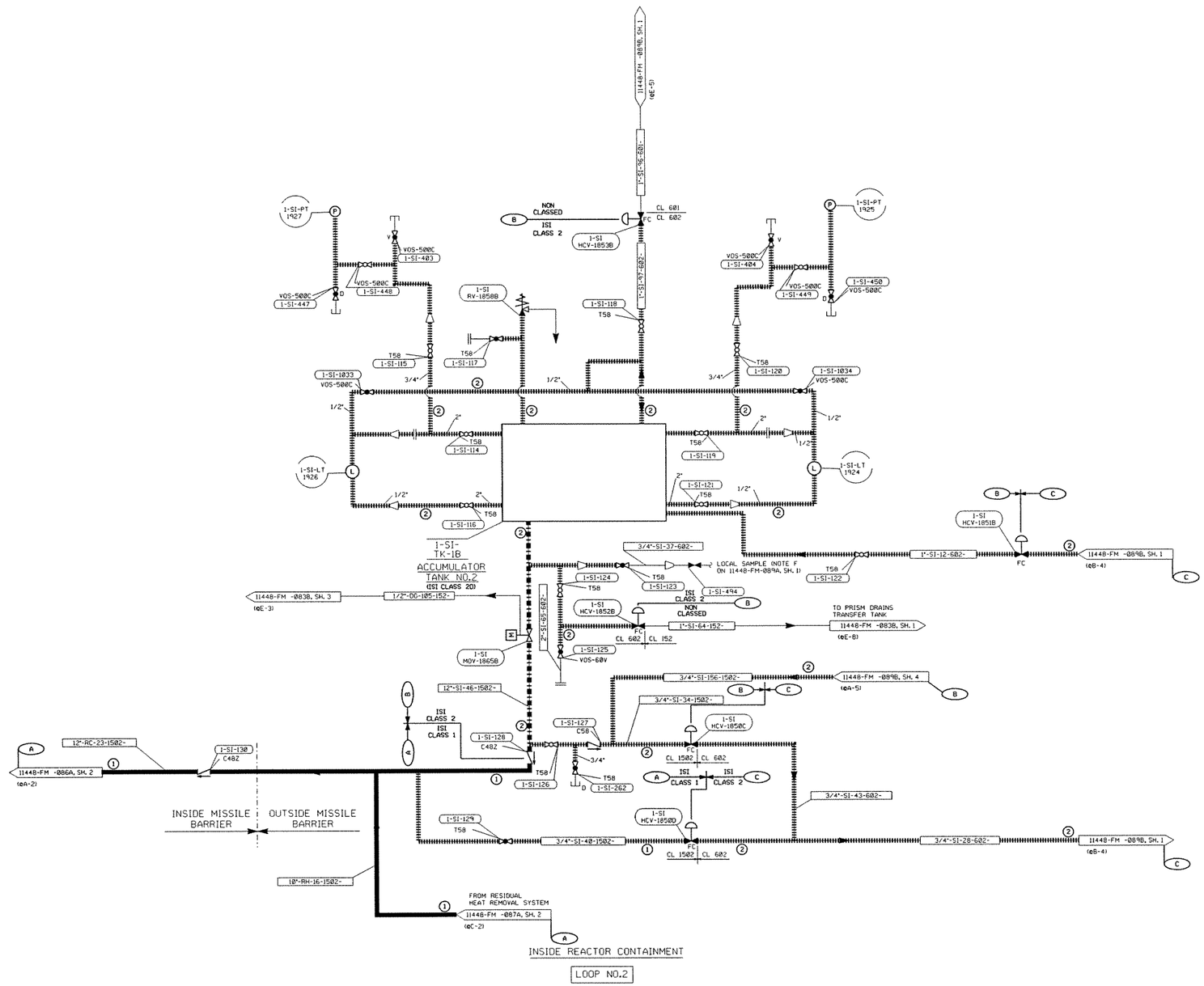

NOTES

1. FOR NOTES, SEE SHEET 1 OF THIS DRAWING.

REFERENCE DRAWINGS

NUMBER	TITLE
01. FOR ADDITIONAL REFERENCE DRAWINGS, SEE SHEET 1 OF THIS DRAWING.	
02. 11448-FM-083B	FLOW/VON DIAGRAM, VENT & DRAIN SYSTEM
03. 11448-FM-086A	FLOW/VON DIAGRAM, REACTOR COOLANT SYSTEM
04. 11448-FM-089A	FLOW/VON DIAGRAM, SAFETY INJECTION SYSTEM
05. 11448-FM-087A	FLOW/VON DIAGRAM, RESIDUAL HEAT REMOVAL SYSTEM

BYPRODUCT DRAWINGS

1. 11448-CBM-089B-3, SH.2 — ISI CLASSIFICATION BOUNDARY DRAWING
2. 11448-SPM-089B-3, SH.2 — ISI SYSTEM PRESSURE TESTING DRAWING

BYPRODUCT NOTES

(A) THE INCLUDED COMPONENTS HAVE BEEN CLASSIFIED ISI CLASS 1 PER 10CFR50.2-1991; REACTOR COOLANT PRESSURE BOUNDARY (RCPB) DEFINITION.

(B) THE INCLUDED COMPONENTS HAVE BEEN CLASSIFIED ISI CLASS 2 PER PARAGRAPH C.1.a OF REGULATORY GUIDE 1.26 REV 3; SYSTEMS IMPORTANT TO SAFETY THAT ARE DESIGNED FOR EMERGENCY CORE COOLING.

(C) THE INCLUDED COMPONENTS HAVE BEEN CLASSIFIED ISI CLASS 2 PER PARAGRAPH 2.3.1.2(1) OF ANSI N18.2a-1975; REACTOR CONTAINMENT COMPONENTS.

FOR AN EXPLANATION OF THE LINE CODINGS AND SYMBOLS EMPLOYED, SEE 11448-CB-LS-4.

CONTINUATION DRAWING NUMBERS REFER TO FM OR FB DRAWINGS. THE CORRESPONDING CLASSIFICATION BOUNDARY DRAWINGS (CBM OR CBB) CAN BE DETERMINED BY SUBSTITUTING CBM OR CBB FOR FM OR FB.

CAUTION:
THE BACKGROUND PORTION OF THIS BYPRODUCT DRAWING IS FOR REFERENCE ONLY. THE BACKGROUND INFORMATION IS NOT CONTROLLED AND MAY NOT REFLECT THE ACTUAL PLANT CONFIGURATION. REFER TO THE LATEST FLOW/VALVE OPERATING NUMBERS DIAGRAM FOR CONTROLLED BACKGROUND INFORMATION.

REVISION DESCRIPTION

THIS BYPRODUCT DWG ISSUED PER THE FOLLOWING FLOW/VON DIAGRAM

FLOW/VON DRAWING NO:	REV.
11448-FM -089B	23

SH 2 OF 4

Dominion

NUCLEAR ENGINEERING
RICHMOND, VIRGINIA

ISI CLASSIFICATION BOUNDARY DWG INTERVAL-4
SAFETY INJECTION SYSTEM
SURRY POWER STATION UNIT 1
VIRGINIA POWER

REVISION DESCRIPTION: INITIAL ISSUE. THIS DWG SUPERSEDES INTERVAL-3 PER ISI REVIEW. (OCR 04-1288)

CAD NO: C:\usr\dgn\S1089B2MCB4n11

DRAWING NO: 11448-CBM-089B-4 — REV 0

DSGN DWB | SCALE: NONE | UNLESS OTHERWISE NOTED | SH 2 OF 4

PC*MF3

WAYNE89
09-AUG-2004 13:37
C:\usr\dgn\S1089B2MCB4n11

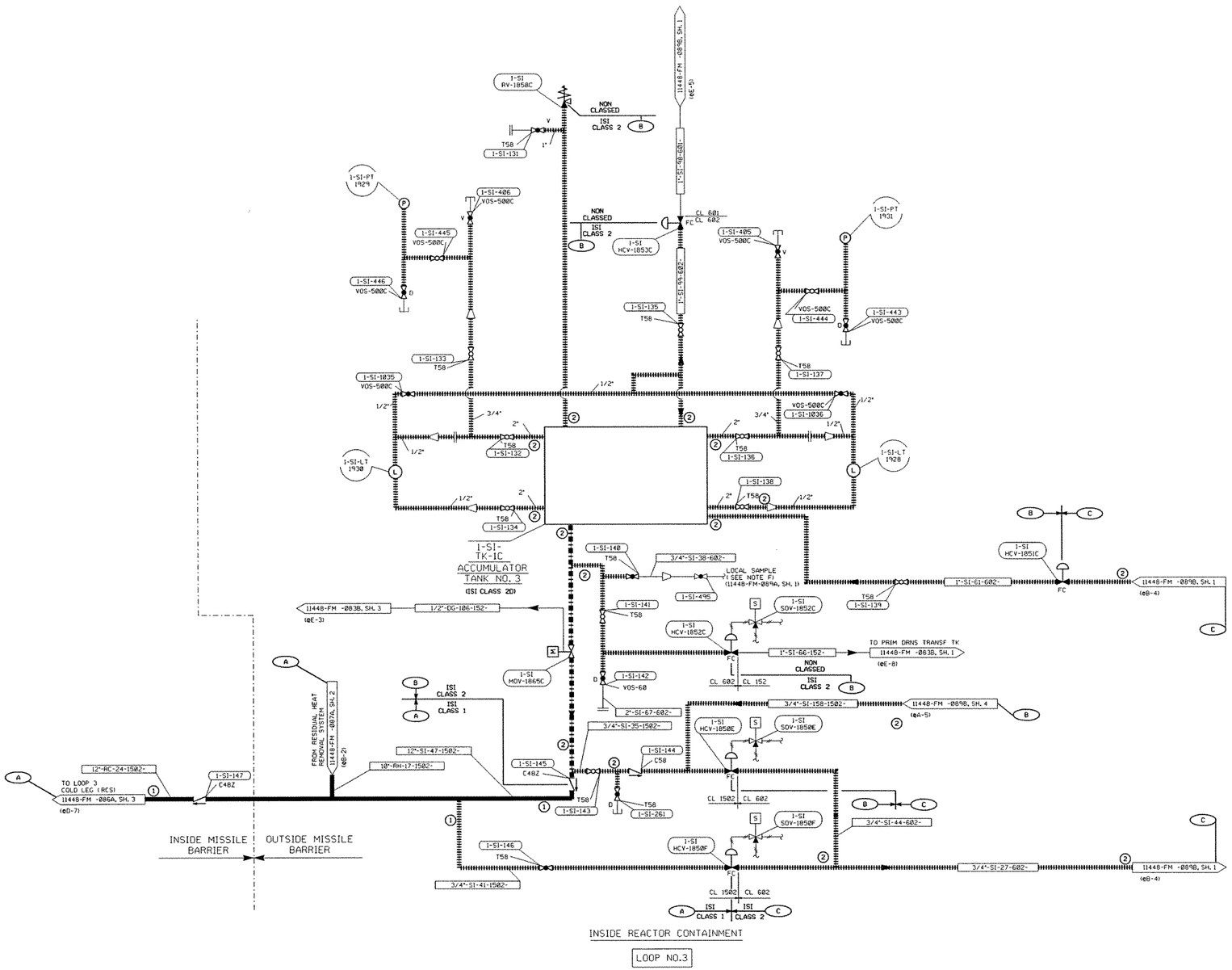

NOTES

1. FOR NOTES, SEE SHEET 1 OF THIS DRAWING.

REFERENCE DRAWINGS

NUMBER	TITLE
01. FOR ADDITIONAL REFERENCE DRAWINGS, SEE SHEET 1 OF THIS DRAWING.	
02. 11448-FM-083B	FLOW/VON DIAGRAM, VENT & DRAIN SYSTEM
03. 11448-FM-086A	FLOW/VON DIAGRAM, REACTOR COOLANT SYSTEM
04. 11448-FM-087A	FLOW/VON DIAGRAM, RESIDUAL HEAT REMOVAL SYSTEM
05. 11448-FM-089A	FLOW/VON DIAGRAM, SAFETY INJECTION SYSTEM

BYPRODUCT DRAWINGS

1. 11448-CBM-089B-3, SH. 3	ISI CLASSIFICATION BOUNDARY DRAWING
2. 11448-SPM-089B-3, SH. 3	ISI SYSTEM PRESSURE TESTING DRAWING

BYPRODUCT NOTES

(A) THE INCLUDED COMPONENTS HAVE BEEN CLASSIFIED ISI CLASS 1 PER 10CFR50.2-1991: REACTOR COOLANT PRESSURE BOUNDARY (RCPB) DEFINITION.

(B) THE INCLUDED COMPONENTS HAVE BEEN CLASSIFIED ISI CLASS 2 PER PARAGRAPH C.1.a OF REGULATORY GUIDE 1.26 REV 3: SYSTEMS IMPORTANT TO SAFETY THAT ARE DESIGNED FOR EMERGENCY CORE COOLING.

(C) THE INCLUDED COMPONENTS HAVE BEEN CLASSIFIED ISI CLASS 2 PER PARAGRAPH 2.3.1.2(1) OF ANSI N18.2a-1975: REACTOR CONTAINMENT COMPONENTS.

FOR AN EXPLANATION OF THE LINE CODINGS AND SYMBOLS EMPLOYED, SEE 11448-CB-LS-4.

CONTINUATION DRAWING NUMBERS REFER TO FM OR FB DRAWINGS. THE CORRESPONDING CLASSIFICATION BOUNDARY DRAWINGS (CBM OR CBB) CAN BE DETERMINED BY SUBSTITUTING CBM OR CBB FOR FM OR FB.

CAUTION:
THE BACKGROUND PORTION OF THIS BYPRODUCT DRAWING IS FOR REFERENCE ONLY. THE BACKGROUND INFORMATION IS NOT CONTROLLED AND MAY NOT REFLECT THE ACTUAL PLANT CONFIGURATION. REFER TO THE LATEST FLOW/VALVE OPERATING NUMBERS DIAGRAM FOR CONTROLLED BACKGROUND INFORMATION.

REVISION DESCRIPTION

THIS BYPRODUCT DWG ISSUED PER THE FOLLOWING FLOW/VON DIAGRAM

FLOW/VON DRAWING NO:	REV.
11448-FM -089B	25
	SH 3 OF 4

Dominion

NUCLEAR ENGINEERING
RICHMOND, VIRGINIA

ISI CLASSIFICATION BOUNDARY DWG INTERVAL-4
SAFETY INJECTION SYSTEM
SURRY POWER STATION UNIT 1
VIRGINIA POWER

REVISION DESCRIPTION

INITIAL ISSUE. THIS DWG SUPERSEDES INTERVAL-3 PER ISI REVIEW. (OCR 04-1289)

CAD NO: C:\usr\dgn\S1089B3MCB4nm1

DRAWING NO:	REV
11448-CBM-089B-4	0

DSGN	GWB	SCALE: NONE	UNLESS OTHERWISE NOTED	SH 3 OF 4

PC-MF3

WAYNE89
09-AUG-2004 13:37
C:\usr\dgn\S1089B3MCB4nm1

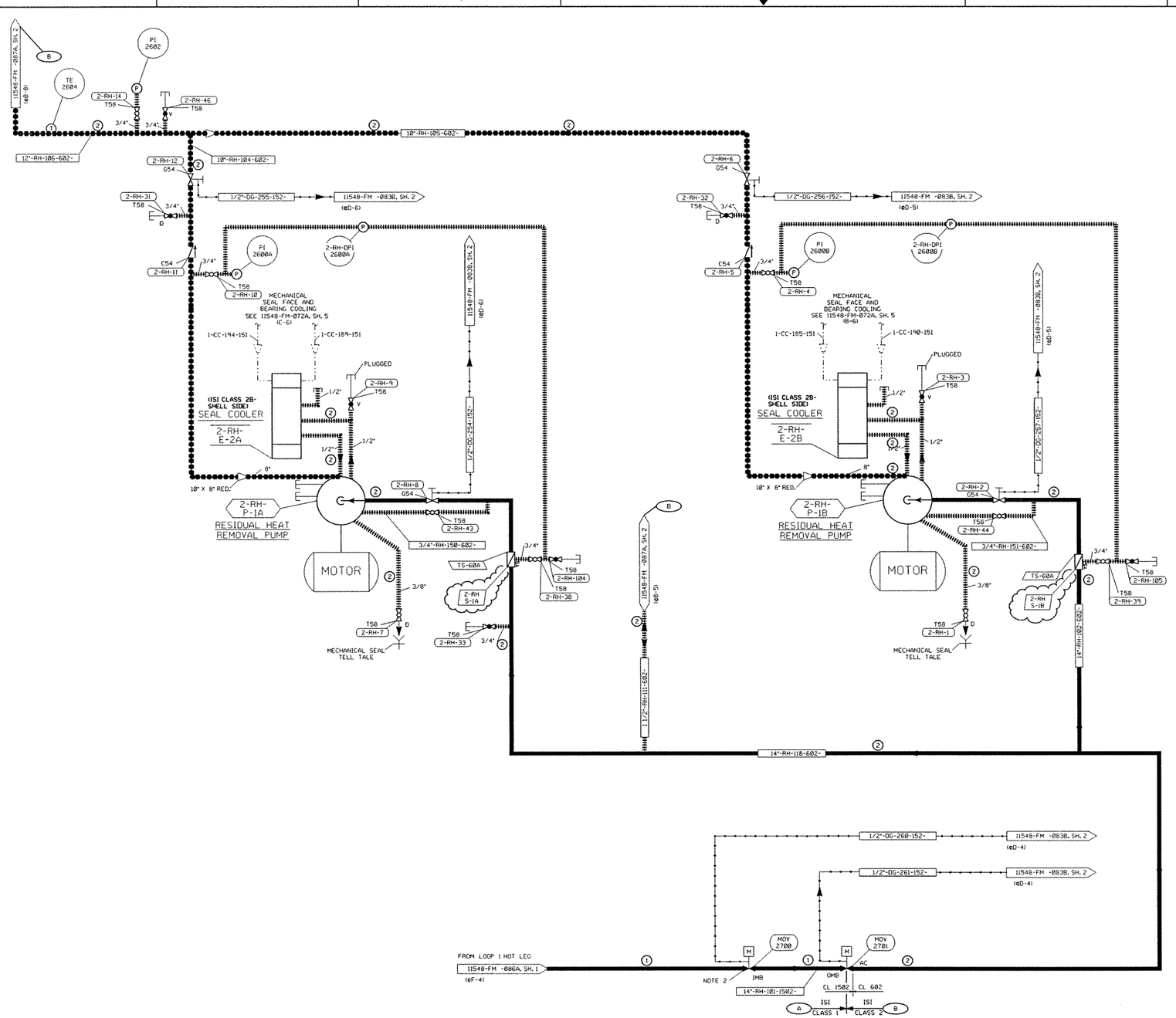

NOTES

1. VALVES ARE NORMALLY INSTALLED WITH FLOW UNDER SEAT.
2. REACTOR COOLANT PRESSURE INTERLOCK PREVENTS ISOLATION VALVE OPENING ABOVE SET PRESSURE.
3. LOCATE ISOLATION VALVE CLOSE TO MAIN HEADER.
4. LOCATE CONNECTION IN BOTTOM HALF OF REACTOR COOLANT PIPING ON 45 DEG. ANGLE TO VERTICAL.
5. FLANGES ARE 300 LB STAINLESS STEEL TYPE 316.

LEGEND:
D - LOCAL DRAIN CONNECTION
V - LOCAL VENT CONNECTION
OMB - OUTSIDE MISSILE BARRIER
IMB - INSIDE MISSILE BARRIER
T - PLUGGED CONNECTION

REFERENCE DRAWINGS

NUMBER	TITLE
01. 11548-FM-072A	FLOW/VON DIAGRAM, COMPONENT COOLING WATER SYSTEM
02. 11548-FM-082A	FLOW/VON DIAGRAM, SAMPLING SYSTEM
03. 11548-FM-083B	FLOW/VON DIAGRAM, VENT & DRAIN SYSTEM
04. 11548-FM-084A	FLOW/VON DIAGRAM, CONTAINMENT & RECIRC. SPRAY SYSTEM
05. 11548-FM-086A	FLOW/VON DIAGRAM, REACTOR COOLANT SYSTEM
06. 11548-FM-086B	FLOW/VON DIAGRAM, REACTOR COOLANT SYSTEM
07. 11548-FM-088C	FLOW/VON DIAGRAM, CHEMICAL & VOLUME CONTROL SYSTEM
08. 11548-FM-089B	FLOW/VON DIAGRAM, SAFETY INJECTION SYSTEM

BYPRODUCT DRAWINGS

1. 11548-CBM-087A, SH.1 — ISI CLASSIFICATION BOUNDARY DRAWING
2. 11548-SPM-087A, SH.1 — ISI SYSTEM PRESSURE TESTING DRAWING

BYPRODUCT NOTES

(A) THE INCLUDED COMPONENTS HAVE BEEN CLASSIFIED ISI CLASS 1 PER 10CFR50.2-1991: REACTOR COOLANT PRESSURE BOUNDARY (RCPB) DEFINITION.

(B) THE INCLUDED COMPONENTS HAVE BEEN CLASSIFIED ISI CLASS 2 PER PARAGRAPH C.1.b(2) OF REGULATORY GUIDE 1.26 REV 3: SYSTEMS IMPORTANT TO SAFETY THAT ARE DESIGNED FOR REDSIDUAL HEAT REMOVAL.

FOR AN EXPLANATION OF THE LINE CODINGS AND SYMBOLS EMPLOYED, SEE 11548-CB-LAS-3.

CONTINUATION DRAWING NUMBERS REFER TO FM OR FB DRAWINGS. THE CORRESPONDING CLASSIFICATION BOUNDARY DRAWINGS (CBM OR CBB) CAN BE DETERMINED BY SUBSTITUTING CBM OR CBB FOR FM OR FB.

CAUTION:
THE BACKGROUND PORTION OF THIS BYPRODUCT DRAWING IS FOR REFERENCE ONLY. THE BACKGROUND INFORMATION IS NOT CONTROLLED AND MAY NOT REFLECT THE ACTUAL PLANT CONFIGURATION. REFER TO THE LATEST FLOW/VALVE OPERATING NUMBERS DIAGRAM FOR CONTROLLED BACKGROUND INFORMATION.

REVISION DESCRIPTION

THIS BYPRODUCT DWG ISSUED PER THE FOLLOWING FLOW/VON DIAGRAM

FLOW/VON DRAWING NO.	REV.
11548-FM -087A	17

SH 1 OF 2

VIRGINIA POWER
NORTH CAROLINA POWER

NUCLEAR ENGINEERING SERVICES
RICHMOND, VIRGINIA

ISI CLASSIFICATION BOUNDARY DWG INTERVAL-3
RESIDUAL HEAT REMOVAL SYSTEM
SURRY POWER STATION UNIT 2
VIRGINIA POWER

DSGN		DSGN SUPV	ARF
DRWN	APS	DISPL ENGR	THN
CHKD	FHS	LEAD ENGR	
DATE		SCALE	NONE

CAD NO. /usr/dgn/350160/S2087A1MCB3q11
DRAWING NO. 11548-CBM-087A-3 REV. 2
UNLESS OTHERWISE NOTED SH 1 OF 2

REV	DATE	DSGN	DRWN	CHKD	DSGN SUPV	LEAD ENGR	CIVIL ENGR	ELEC ENGR	MECH ENGR	ISI	E.M. ENGR	I&C ENGR
2	-95	—	EES	DW	—	—	—	—	—	—	—	—
1	5-23-94	—	LPM	DW	ARF	—	—	—	TMN	BC	—	—
0	10-28-93	—	—	—	—	—	—	—	—	BC	—	—

REVISED PER REVISION 17 OF 11548-FM-087A SH-1.
REVISED PER REVISION 16 OF 11548-FM-087A SH-1.
INITIAL ISSUE PER REVISION 15 OF 11548-FM-087A SH-1.

(STEPHEE)
9-MAR-1997 11:42
/usr/dgn/350160/S2087A1MCB3q11

DRAWING NO. 11548-CBM-087A-3 REV. 2
SH 1 OF 2

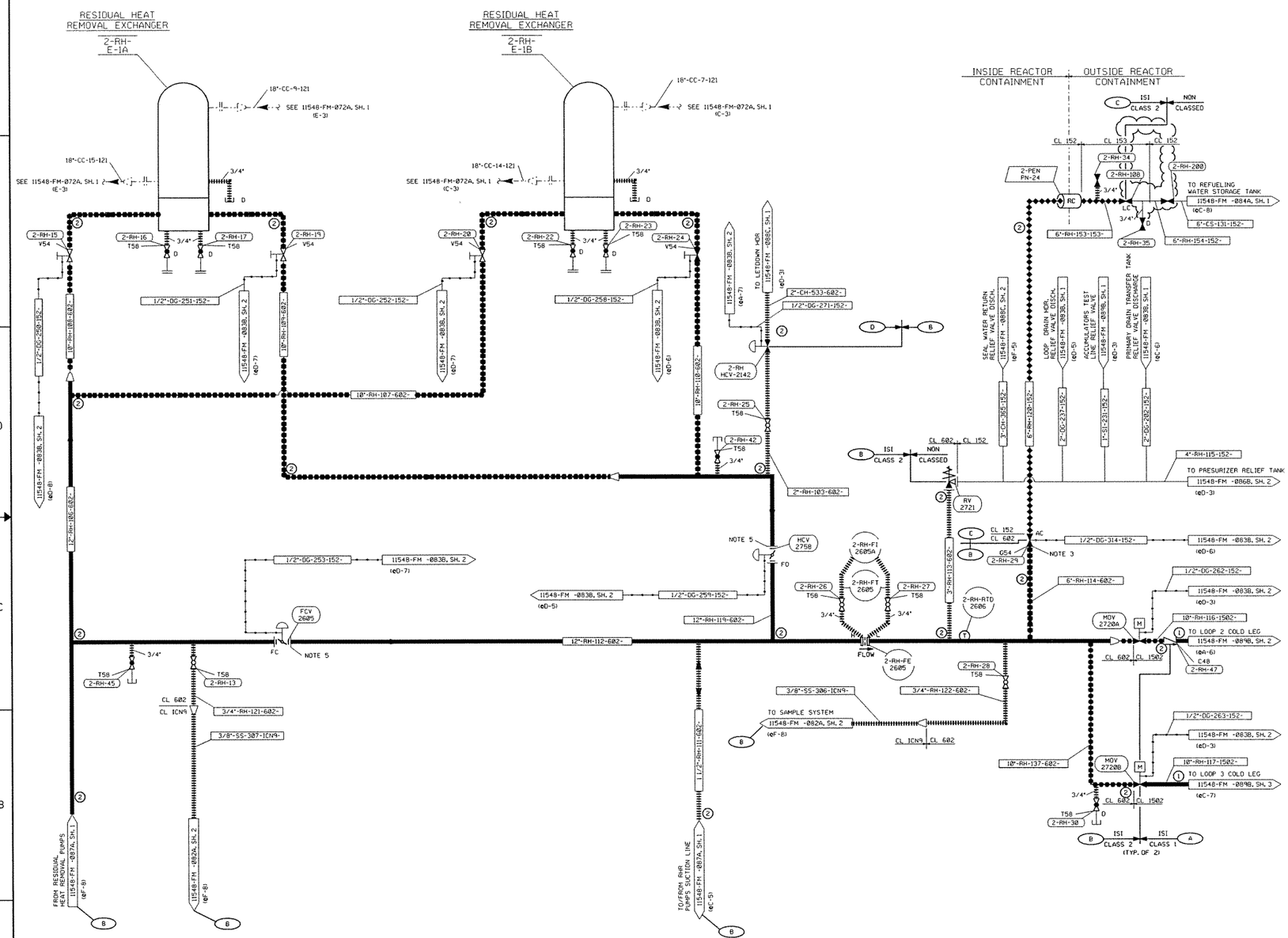

NOTES

1. FOR NOTES, SEE SHEET 1 OF THIS DRAWING.

REFERENCE DRAWINGS

NUMBER	TITLE
01.	FOR ADDITIONAL REFERENCE DRAWINGS, SEE SHEET 1 OF THIS DRAWING.
02.	11548-FM-082A FLOW/VON DIAGRAM, SAMPLING SYSTEM
03.	11548-FM-093B FLOW/VON DIAGRAM, VENTS AND DRAINS SYSTEM
04.	11548-FM-084A FLOW/VON DIAGRAM, CONTAINMENT SPRAY SYSTEM
05.	11548-FM-086B FLOW/VON DIAGRAM, REACTOR COOLANT SYSTEM
06.	11548-FM-088C FLOW/VON DIAGRAM, CHEMICAL AND VOLUME CONTROL SYSTEM
07.	11548-FM-089B FLOW/VON DIAGRAM, SAFETY INJECTION SYSTEM
08.	11548-FM-072A FLOW/VON DIAGRAM,COMPONENT COOLING WATER SYSTEM

BYPRODUCT DRAWINGS

1. 11548-CBM-087A, SH.2 ISI CLASSIFICATION BOUNDARY DRAWING
2. 11548-SPM-087A, SH.2 ISI SYSTEM PRESSURE TESTING DRAWING

BYPRODUCT NOTES

(A) THE INCLUDED COMPONENTS HAVE BEEN CLASSIFIED ISI CLASS 1 PER 10CFR50.2-1991: REACTOR COOLANT PRESSURE BOUNDARY (RCPB) DEFINITION.

(B) THE INCLUDED COMPONENTS HAVE BEEN CLASSIFIED ISI CLASS 2 PER PARAGRAPH C. 1. b(2) OF REGULATORY GUIDE 1.26 REV 3: SYSTEMS IMPORTANT TO SAFETY THAT ARE DESIGNED FOR REDSIDUAL HEAT REMOVAL.

(C) THE INCLUDED COMPONENTS HAVE BEEN CLASSIFIED ISI CLASS 2 PER PARAGRAPH 2.3.1.2(1) OF ANSI N18.2a-1975: REACTOR CONTAINMENT COMPONENTS.

(D) THE INCLUDED COMPONENTS HAVE BEEN CLASSIFIED ISI CLASS 2 PER PARAGRAPH C. 1. b(1) OF REGULATORY GUIDE 1.26 REV 3: SYSTEMS IMPORTANT TO SAFETY THAT ARE DESIGNED FOR REACTOR SHUTDOWN (REACTOR COOLANT MAKEUP AND LETDOWN.

FOR AN EXPLANATION OF THE LINE CODINGS AND SYMBOLS EMPLOYED, SEE 11548-CB-L&S-3.

CONTINUATION DRAWING NUMBERS REFER TO FM OR FB DRAWINGS. THE CORRESPONDING CLASSIFICATION BOUNDARY DRAWINGS (CBM OR CBB) CAN BE DETERMINED BY SUBSTITUTING CBM OR CBB FOR FM OR FB.

CAUTION:
THE BACKGROUND PORTION OF THIS BYPRODUCT DRAWING IS FOR REFERENCE ONLY. THE BACKGROUND INFORMATION IS NOT CONTROLLED AND MAY NOT REFLECT THE ACTUAL PLANT CONFIGURATION. REFER TO THE LATEST FLOW/VALVE OPERATING NUMBERS DIAGRAM FOR CONTROLLED BACKGROUND INFORMATION.

REVISION DESCRIPTION

THIS BYPRODUCT DWG ISSUED PER THE FOLLOWING FLOW/VON DIAGRAM

FLOW/VON DRAWING NO.	REV.
11548-FM -087A	22
	SH 2 OF 2

VIRGINIA POWER
NORTH CAROLINA POWER

NUCLEAR ENGINEERING SERVICES
RICHMOND, VIRGINIA

ISI CLASSIFICATION BOUNDARY DWG INTERVAL-3
RESIDUAL HEAT REMOVAL SYSTEM
SURRY POWER STATION UNIT 2
VIRGINIA POWER

DSGN		DSGN SUPV	ARF
DRWN	RPO	DISPL ENGR	TMN
CHKD	FMS	LEAD ENGR	
DATE		SCALE	NONE

CAD NO. /usr/dgn/350160/S2087A2MCB3gn1
DRAWING NO. 11548-CBM-087A-3 REV. 6
UNLESS OTHERWISE NOTED SH 2 OF 2

REV	DATE	DSGN	DRWN	CHKD	DSGN SUPV	LEAD ENGR	CIVIL ENGR	ELEC ENGR	MECH ENGR	ISI	E.M. ENGR	I&C ENGR
5	6-11-96	—	LML	DW	ARF	—	—	—	BR	BG	—	—
4	3-4-96	—	LML	DW	ARF	—	—	—	JOH	BG	—	—
3	11-17-94	—	RPO	DW	ARF	—	—	HZG	—	BG	—	—
2	1-27-94	—	DWR	DW	ARF	—	—	—	BJJ	BG	—	—
1	12-29-93	—	RPO	DW	ARF	—	—	—	CGB	BG	—	—
6	-96	—	DWR	GGS	—	—	—	—	—	—	—	—

5 REVISED PER REVISION 22 OF 11548-FM-087A SH-2.
4 REVISED PER REVISION 21 OF 11548-FM-087A SH-2.
3 REVISED PER REVISION 20 OF 11548-FM-087A SH-2.
2 REVISED PER ISI REVIEW.
1 REVISED PER REVISION 19 OF 11548-FM-087A SH-2.
6 REVISED PER ISI REVIEW.

(STEPHEE)
9-MAR-1997 11:44
/usr/dgn/350160/S2087A2MCB3gn1

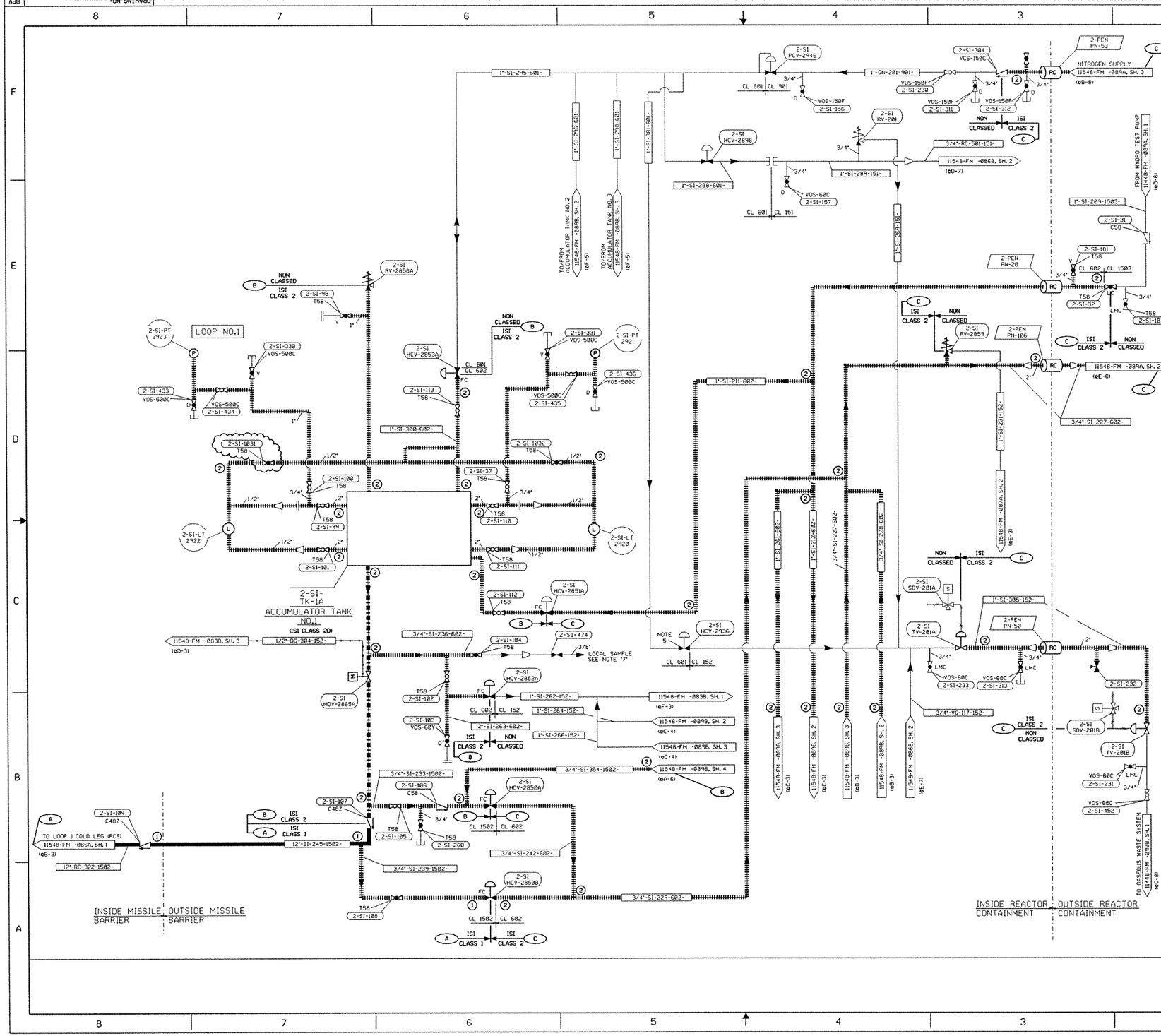

NOTES

1. FOR NOTES SEE SHEET 1 OF DRAWING 11548-FM-089A

REFERENCE DRAWINGS

NUMBER	TITLE
01. 11548-FM-093B	FLOW/VON DIAGRAM, VENT & DRAIN SYSTEM
02. 11548-FM-086A	FLOW/VON DIAGRAM, REACTOR COOLANT SYSTEM
03. 11548-FM-086B	FLOW/VON DIAGRAM, REACTOR COOLANT SYSTEM
04. 11548-FM-087A	FLOW/VON DIAGRAM, RESIDUAL HEAT REMOVAL SYSTEM
05. 11548-FM-089A	FLOW/VON DIAGRAM, SAFETY INJECTION SYSTEM
06. 11448-FM-089A	FLOW/VON DIAGRAM, SAFETY INJECTION SYSTEM
07. 11448-FM-090B	FLOW/VON DIAGRAM, GASEOUS WASTE DISPOSAL SYSTEM

BYPRODUCT DRAWINGS

1. 11548-CBM-089B-3, SH. 1 — ISI CLASSIFICATION BOUNDARY DRAWING
2. 11548-SPM-089B-3, SH. 1 — ISI SYSTEM PRESSURE TESTING DRAWING

BYPRODUCT NOTES

(A) THE INCLUDED COMPONENTS HAVE BEEN CLASSIFIED ISI CLASS 1 PER 10CFR50.2-1991: REACTOR COOLANT PRESSURE BOUNDARY (RCPB) DEFINITION.

(B) THE INCLUDED COMPONENTS HAVE BEEN CLASSIFIED ISI CLASS 2 PER PARAGRAPH C.1.e OF REGULATORY GUIDE 1.26 REV 3: SYSTEMS IMPORTANT TO SAFETY THAT ARE DESIGNED FOR EMERGENCY CORE COOLING.

(C) THE INCLUDED COMPONENTS HAVE BEEN CLASSIFIED ISI CLASS 2 PER PARAGRAPH 2.3.1.2(1) OF ANSI N18.2a-1975: REACTOR CONTAINMENT COMPONENTS.

FOR AN EXPLANATION OF THE LINE CODINGS AND SYMBOLS EMPLOYED, SEE 11548-CB-L&S-3.

CONTINUATION DRAWING NUMBERS REFER TO FM OR FB DRAWINGS. THE CORRESPONDING CLASSIFICATION BOUNDARY DRAWINGS (CBM OR CBB) CAN BE DETERMINED BY SUBSTITUTING CBM OR CBB FOR FM OR FB.

CAUTION:
THE BACKGROUND PORTION OF THIS BYPRODUCT DRAWING IS FOR REFERENCE ONLY. THE BACKGROUND INFORMATION IS NOT CONTROLLED AND MAY NOT REFLECT THE ACTUAL PLANT CONFIGURATION. REFER TO THE LATEST FLOW/VALVE OPERATING NUMBERS DIAGRAM FOR CONTROLLED BACKGROUND INFORMATION.

REVISION DESCRIPTION

THIS BYPRODUCT DWG ISSUED PER THE FOLLOWING FLOW/VON DIAGRAM

FLOW/VON DRAWING NO:	REV.
11548-FM -089B	33
	SH 1 OF 4

Dominion

NUCLEAR ENGINEERING
RICHMOND, VIRGINIA

ISI CLASSIFICATION BOUNDARY DWG INTERVAL-3
SAFETY INJECTION SYSTEM
SURRY POWER STATION UNIT 2
VIRGINIA POWER

REVISION DESCRIPTION: REVISED PER REVISION 33 OF 11548-FM-089B SH-1. (DCR 02-1577)

CAD NO: C:\war\dgn\S2089B1MCB3oz1

DRAWING NO: 11548-CBM-089B-3 REV 5

DSGN EES | SCALE: NONE | UNLESS OTHERWISE NOTED | SH 1 OF 4

PC:MF3

STEPHEE
22-AUG-2002 13:20
C:\war\dgn\S2089B1MCB3oz1

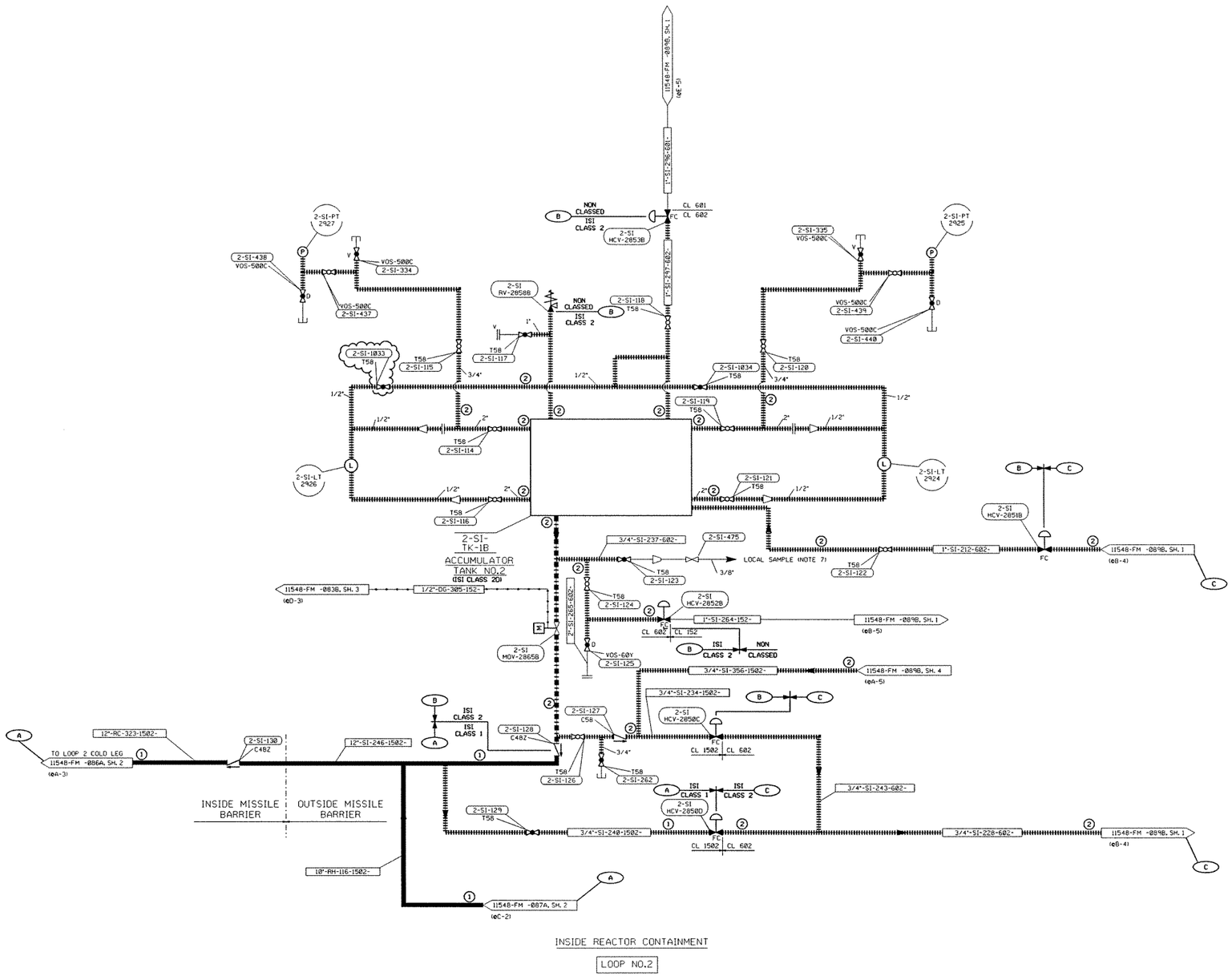

NOTES

1. FOR NOTES, SEE SHEET 1 OF DRAWING 11548-FM-089A.

REFERENCE DRAWINGS

NUMBER	TITLE
01. FOR ADDITIONAL REFERENCE DRAWINGS, SEE SHEET 1 OF THIS DRAWING.	
02. 11548-FM-083B	FLOW/VON DIAGRAM, VENT AND DRAIN SYSTEM
03. 11548-FM-086A	FLOW/VON DIAGRAM, REACTOR COOLANT SYSTEM
04. 11548-FM-087A	FLOW/VON DIAGRAM, RESIDUAL HEAT REMOVAL SYSTEM
05. 11548-FM-089A	FLOW/VON DIAGRAM, SAFETY INJECTION SYSTEM

BYPRODUCT DRAWINGS

1. 11548-CBM-089B-3, SH. 2 — ISI CLASSIFICATION BOUNDARY DRAWING
2. 11548-SPM-089B-3, SH. 2 — ISI SYSTEM PRESSURE TESTING DRAWING

BYPRODUCT NOTES

(A) THE INCLUDED COMPONENTS HAVE BEEN CLASSIFIED ISI CLASS 1 PER 10CFR50.2-1991: REACTOR COOLANT PRESSURE BOUNDARY (RCPB) DEFINITION.

(B) THE INCLUDED COMPONENTS HAVE BEEN CLASSIFIED ISI CLASS 2 PER PARAGRAPH C.1.e OF REGULATORY GUIDE 1.26 REV 3: SYSTEMS IMPORTANT TO SAFETY THAT ARE DESIGNED FOR EMERGENCY CORE COOLING.

(C) THE INCLUDED COMPONENTS HAVE BEEN CLASSIFIED ISI CLASS 2 PER PARAGRAPH 2.3.1.2(1) OF ANSI N18.2a-1975: REACTOR CONTAINMENT COMPONENTS.

FOR AN EXPLANATION OF THE LINE CODINGS AND SYMBOLS EMPLOYED, SEE 11548-CB-L&S-3.

CONTINUATION DRAWING NUMBERS REFER TO FM OR FB DRAWINGS. THE CORRESPONDING CLASSIFICATION BOUNDARY DRAWINGS (CBM OR CBB) CAN BE DETERMINED BY SUBSTITUTING CBM OR CBB FOR FM OR FB.

CAUTION:
THE BACKGROUND PORTION OF THIS BYPRODUCT DRAWING IS FOR REFERENCE ONLY. THE BACKGROUND INFORMATION IS NOT CONTROLLED AND MAY NOT REFLECT THE ACTUAL PLANT CONFIGURATION. REFER TO THE LATEST FLOW/VALVE OPERATING NUMBERS DIAGRAM FOR CONTROLLED BACKGROUND INFORMATION.

REVISION DESCRIPTION

THIS BYPRODUCT DWG ISSUED PER THE FOLLOWING FLOW/VON DIAGRAM

FLOW/VON DRAWING NO:	REV.
11548-FM -089B	26
	SH 2 OF 4

Dominion

NUCLEAR ENGINEERING
RICHMOND, VIRGINIA

ISI CLASSIFICATION BOUNDARY DWG INTERVAL-3
SAFETY INJECTION SYSTEM
SURRY POWER STATION UNIT 2
VIRGINIA POWER

REVISION DESCRIPTION
REVISED PER REVISION 26 OF 11548-FM-089B SH-2. (DCR 82-1649)

CAD NO: C:\usr\dgn\S2089B2MCB3001

DRAWING NO:	REV
11548-CBM-089B-3	4

DSGN GWB | SCALE: NONE | UNLESS OTHERWISE NOTED | SH 2 OF 4

PC-MF3

WAYNE89
12-SEP-2002 10:40
C:\usr\dgn\S2089B2MCB3001

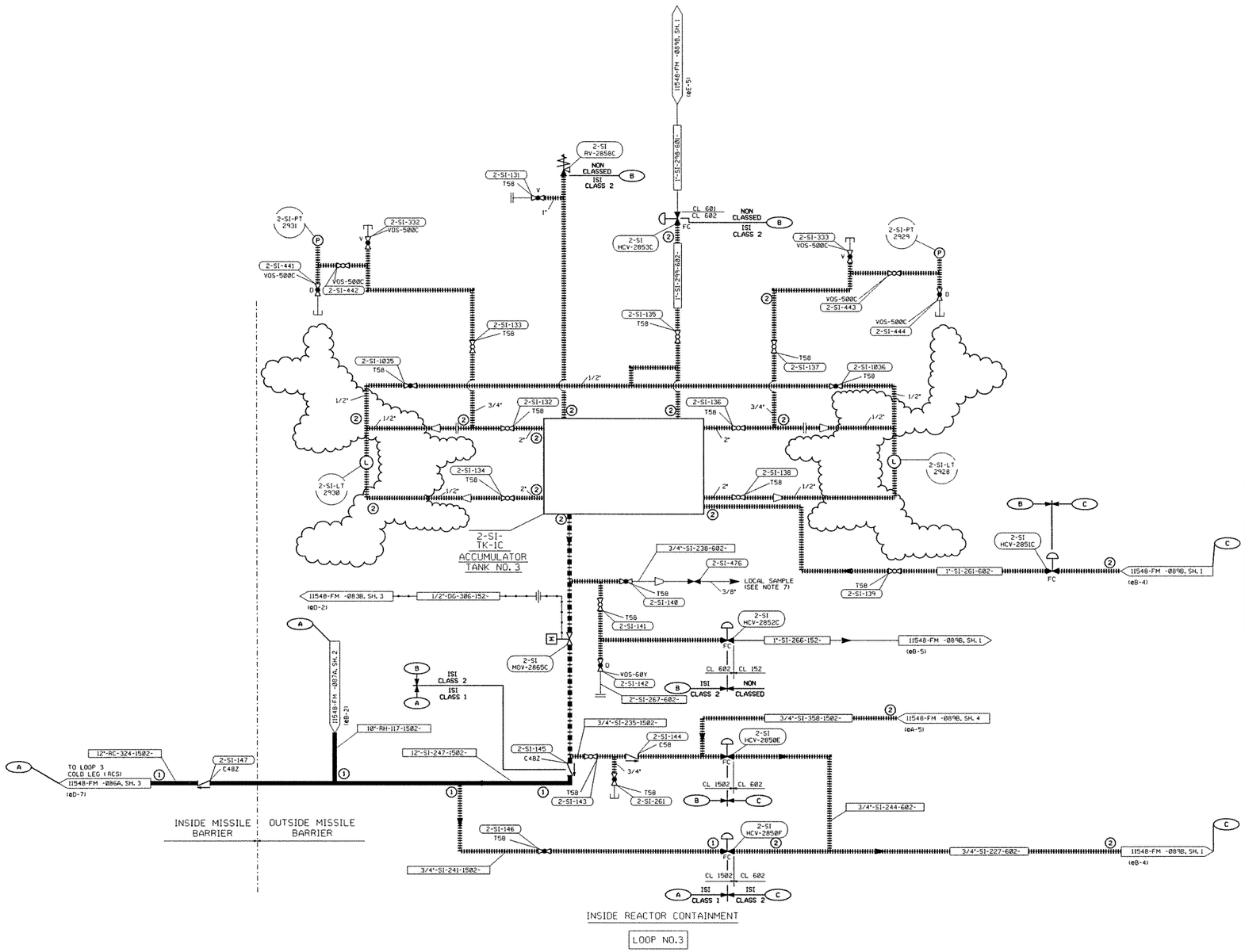

NOTES

1. FOR NOTES, SEE SHEET 1 OF DRAWING 11548-FM-089A.

REFERENCE DRAWINGS

NUMBER	TITLE
01. FOR ADDITIONAL REFERENCE DRAWINGS, SEE SHEET 1 OF THIS DRAWING.	
02. 11548-FM-083B	FLOW/VON DIAGRAM, VENT & DRAIN SYSTEM
03. 11548-FM-086A	FLOW/VON DIAGRAM, REACTOR COOLANT
04. 11548-FM-087A	FLOW/VON DIAGRAM, RESIDUAL HEAT REMOVAL
05. 11548-FM-089A	FLOW/VON DIAGRAM, SAFETY INJECTION SYSTEM

BYPRODUCT DRAWINGS

1. 11548-CBM-089B-3, SH. 3	ISI CLASSIFICATION BOUNDARY DRAWING
2. 11548-SPM-089B-3, SH. 3	ISI SYSTEM PRESSURE TESTING DRAWING

BYPRODUCT NOTES

(A) THE INCLUDED COMPONENTS HAVE BEEN CLASSIFIED ISI CLASS 1 PER 10CFR50.2-1991: REACTOR COOLANT PRESSURE BOUNDARY (RCPB) DEFINITION.

(B) THE INCLUDED COMPONENTS HAVE BEEN CLASSIFIED ISI CLASS 2 PER PARAGRAPH C.1.a OF REGULATORY GUIDE 1.26 REV 3: SYSTEMS IMPORTANT TO SAFETY THAT ARE DESIGNED FOR EMERGENCY CORE COOLING.

(C) THE INCLUDED COMPONENTS HAVE BEEN CLASSIFIED ISI CLASS 2 PER PARAGRAPH 2.3.1.2(1) OF ANSI N18.2a-1975: REACTOR CONTAINMENT COMPONENTS.

FOR AN EXPLANATION OF THE LINE CODINGS AND SYMBOLS EMPLOYED, SEE 11548-CB-L&S-3.

CONTINUATION DRAWING NUMBERS REFER TO FM OR FB DRAWINGS. THE CORRESPONDING CLASSIFICATION BOUNDARY DRAWINGS (CBM OR CBD) CAN BE DETERMINED BY SUBSTITUTING CBM OR CBB FOR FM OR FB.

CAUTION:
THE BACKGROUND PORTION OF THIS BYPRODUCT DRAWING IS FOR REFERENCE ONLY. THE BACKGROUND INFORMATION IS NOT CONTROLLED AND MAY NOT REFLECT THE ACTUAL PLANT CONFIGURATION. REFER TO THE LATEST FLOW/VALVE OPERATING NUMBERS DIAGRAM FOR CONTROLLED BACKGROUND INFORMATION.

REVISION DESCRIPTION

THIS BYPRODUCT DWG ISSUED PER THE FOLLOWING FLOW/VON DIAGRAM

FLOW/VON DRAWING NO:	REV.
11548-FM -089B	26

SH 3 OF 4

VIRGINIA POWER
NORTH CAROLINA POWER

NUCLEAR ENGINEERING SERVICES
RICHMOND, VIRGINIA

ISI CLASSIFICATION BOUNDARY DWG INTERVAL-3
SAFETY INJECTION SYSTEM
SURRY POWER STATION UNIT 2
VIRGINIA POWER

REVISION DESCRIPTION	CAD NO: C:\war\dgn\S2089B3MCB3a×1	
REVISED PER REVISION 26 OF 11548-FM-089B SH-3. (DCR 02-1486)	DRAWING NO: 11548-CBM-089B-3	REV 4
DSGN EES	SCALE: NONE	UNLESS OTHERWISE NOTED SH 3 OF 4

PC-MF3

STEPHEE
17-JUL-2002 14:11
C:\war\dgn\S2089B3MCB3a×1

PRIOR TO USING FOR DESIGN WORK CHECK DMIS FOR WORK PENDING