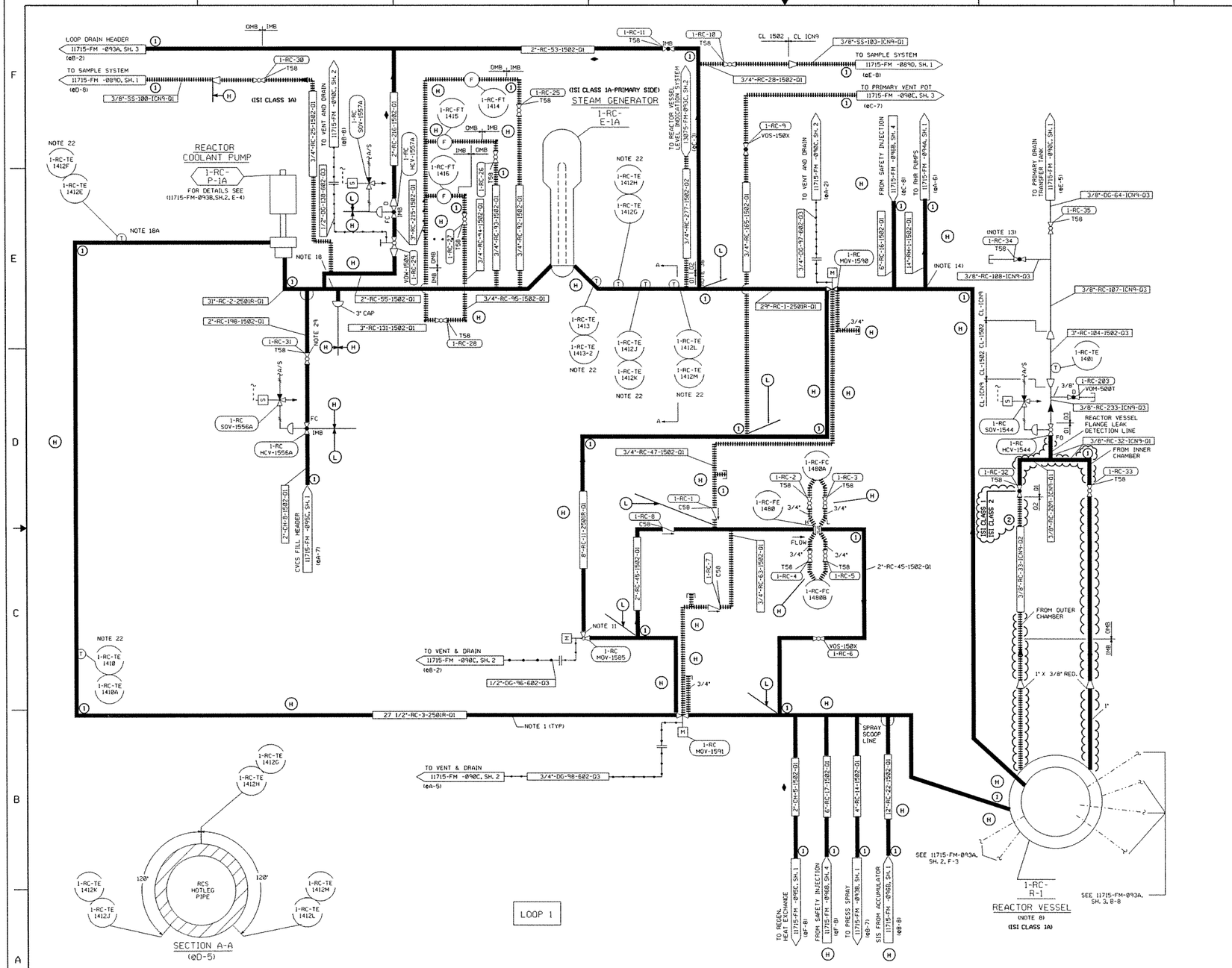

NOTES

1. 27 1/2",29" AND 31" REFER TO INSIDE DIAMETER.
2. ALL CLASS 2501R PIPING SUPPLIED BY WESTINGHOUSE FOR DETAILS SEE W SPEC. G676580,G676342,G675343,G677124, AND G676262. ALL OTHER CLASSES-PIPING SPEC. (NAS28)
3. ALL HIGH PRESSURE VENTS & DRAINS TO BE BLANKED OFF WITH 1500 LB. TP 316SS BLIND FLANGE DURING NORMAL OPERATION.
4. PROVIDE WATER SEAL FOR SPRAY VALVES.
5. GLOBE VALVES NORMALLY INSTALLED WITH FLOW UNDER SEAT
6. PROVIDE EXTENTION STEM FOR ADJUSTMEWNT DURING NORMAL OPERATION.
7. SYMBOLS - E & C GENERAL NUCLEAR STANDARDS APPENDIX A-STD-GN-0013.
8. ACCESS FOR INSPECTION OF REACTOR COOLANT PIPE TO REACTOR VESSEL NOZZEL WELDS TO BE PROVIDED.
9. DELETED
10. PLACE DETECTORS AT BOTTOM OF PIPE.
11. 0.25" HOLE THROUGH VALVES PLUG.
12. LOCATE BELOW ELEVATION OF REACTOR VESSEL FLANGE
13. LOCATE COLLECTION POINT FOR DETERMINING LEAKAGE RATE
14. LOCATE COLLECTION POINT 45 DEGREES BELOW HORIZONAL CENTER LINE
15. HOT LEG BYPASS LINE SCOOPS - ALL LOCATED IN SAME CROSS-SECTIONAL PLANE (SEE SECTION A-A)
16. DELETED
17. DELETED
18. *PRESSURE REGULATOR WITH SCH 40 SS PIPE NIPPLES INSTALLED PER DC 92-240

REFERENCE DRAWINGS

NUMBER	TITLE
01. 11715-FM-079A	FLOW/VON DIAGRAM,COMPONENT COOLING WATER SYSTEM
02. 11715-FM-079B	FLOW/VON DIAGRAM,COMPONENT COOLING WATER SYSTEM
03. 11715-FM-086A	FLOW/VON DIAGRAM,BORON RECOVERY SYSTEM
04. 11715-FM-086D	FLOW/VON DIAGRAM,BORON RECOVERY SYSTEM
05. 11715-FM-089A	FLOW/VON DIAGRAM,SAMPLING SYSTEM
06. 11715-FM-089D	FLOW/VON DIAGRAM,SAMPLING SYSTEM
07. 11715-FM-090B	FLOW/VON DIAGRAM,VENT & DRAIN SYSTEM
08. 11715-FM-090C	FLOW/VON DIAGRAM,VENT & DRAIN SYSTEM
09. 11715-FM-093A	FLOW/VON DIAGRAM,REACTOR COOLANT SYSTEM
10. 11715-FM-093B	FLOW/VON DIAGRAM,REACTOR COOLANT SYSTEM
11. 13075-FM-093C	FLOW/VON DIAGRAM,REACTOR COOLANT SYSTEM
12. 11715-FM-094A	FLOW/VON DIAGRAM,RESIDUAL HEAT REMOVAL SYSTEM
13. 11715-FM-095B	FLOW/VON DIAGRAM,CHEM & VOLUME CONTROL SYSTEM
14. 11715-FM-095C	FLOW/VON DIAGRAM,CHEM & VOLUME CONTROL SYSTEM
15. 11715-FM-096A	FLOW/VON DIAGRAM,SAFETY INJECTION SYSTEM
16. 11715-FM-096B	FLOW/VON DIAGRAM,SAFETY INJECTION SYSTEM

BYPRODUCT DRAWINGS

1. 11715-CBM-093A, SH.1 — ISI CLASSIFICATION BOUNDARY DRAWING
2. DELETED
3. 11715-SPM-093A, SH.1 — ISI SYSTEM PRESSURE TESTING DRAWING

BYPRODUCT NOTES

1: DELETED
2: (H) HIGH SAFETY SIGNIFICANT PIPING
3: (L) LOW SAFETY SIGNIFICANT PIPING

FOR ISI CLASSIFICATION BOUNDARY DRAWING LEGEND AND SYMBOLS, SEE 11715-CBM-L&S-3
THIS CLASSIFICATION BOUNDARY DWG IS TO BE USED FOR THE THIRD TEN YEAR INSPECTION INTERVAL (04-30-1999 TO 04-30-2009)

CONTINUATION DRAWING NUMBERS REFER TO FM OR FB DRAWINGS. THE CORRESPONDING CLASSIFICATION BOUNDARY DRAWINGS (CBM OR CBB) CAN BE DETERMINED BY SUBSTITUTING CBM OR CBB FOR FM OR FB.

CAUTION:
THE BACKGROUND PORTION OF THIS BYPRODUCT DRAWING IS FOR REFERENCE ONLY. THE BACKGROUND INFORMATION IS NOT CONTROLLED AND MAY NOT REFLECT THE ACTUAL PLANT CONFIGURATION. REFER TO THE LATEST FLOW/VALVE OPERATING NUMBERS DIAGRAM FOR CONTROLLED BACKGROUND INFORMATION.

REVISION DESCRIPTION

THIS BYPRODUCT DWG ISSUED PER THE FOLLOWING FLOW/VON DIAGRAM	
FLOW/VON DRAWING NO: 11715-FM -093A	REV. 29
	SH 1 OF 3

Dominion

NUCLEAR ENGINEERING
RICHMOND, VIRGINIA

ISI CLASSIFICATION BOUNDARY DWG INTERVAL-3
REACTOR COOLANT SYSTEM - LOOP 1
NORTH ANNA POWER STATION UNIT 1
VIRGINIA POWER

REVISION DESCRIPTION: REVISED PER DCR 2004-0258 AND REV 29 OF THE FM. THIS DWG SUPERSEDES REV 2.

CAD NO: C:\war\dgn\N1093A1MCB3qz1

DRAWING NO: 11715-CBM-093A-3 — REV 3

DSGN ANM | SCALE: NONE | UNLESS OTHERWISE NOTED | SH 1 OF 3

PC-MF3

WILMERG
30-APR-2004 10:12
C:\war\dgn\N1093A1MCB3qz1

DRAWING NO: 11715-CBM-093A-3 REV 3 SH 1 OF 3

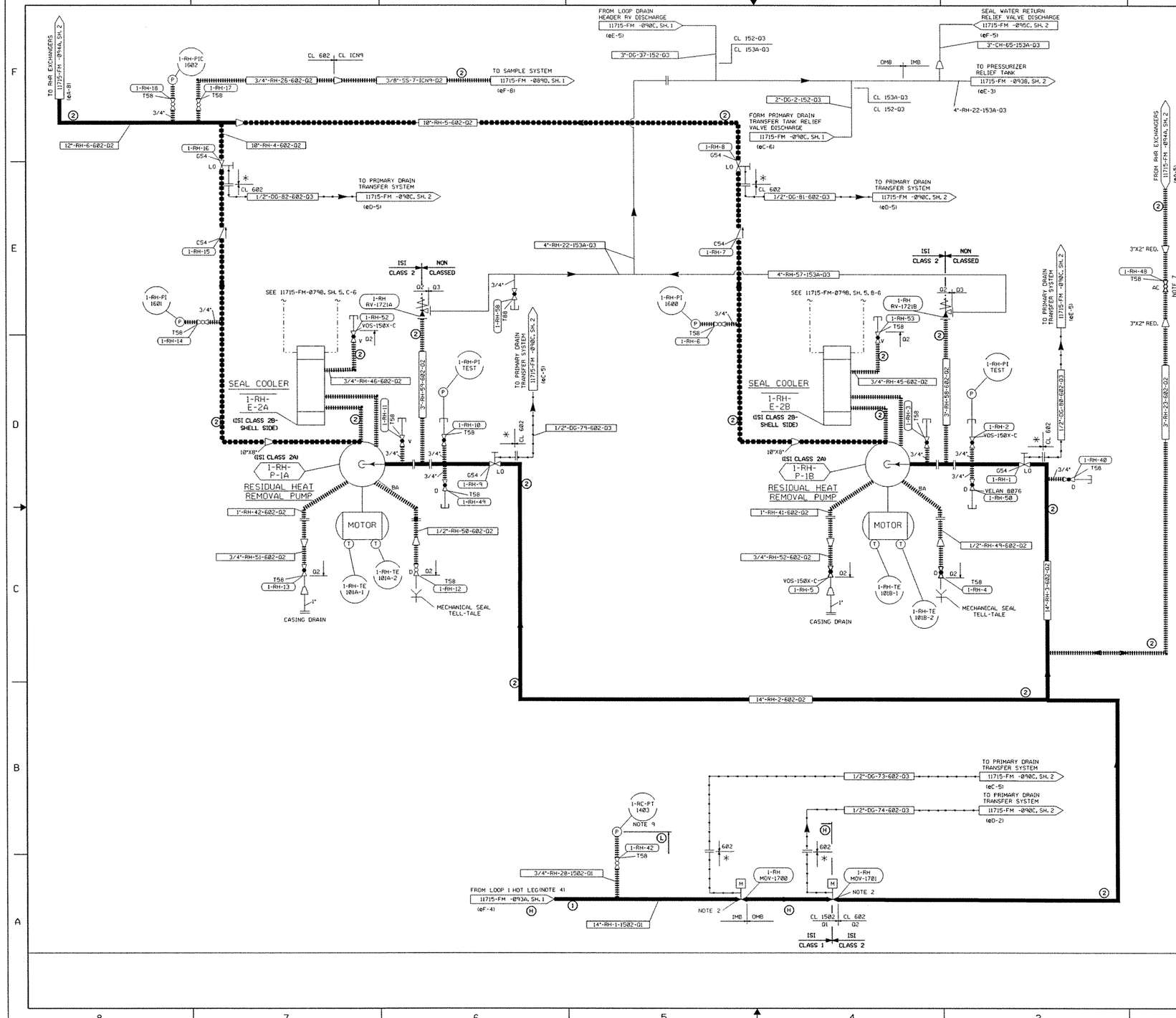

NOTES

1. VALVES ARE NORMALLY INSTALLED WITH FLOW UNDER SEAT.
2. REACTOR COOLANT PRESSURE INTERLOCK PREVENTS ISOLATION VALVE OPENING ABOVE SET PRESSURE.
3. LOCATE ISOLATION VALVE CLOSE TO MAIN HEADER.
4. LOCATE CONNECTION IN BOTTOM HALF OF REACTOR COOLANT PIPING ON 45° ANGLE TO VERTICAL.
5. THE VALVES LISTED BELOW ARE SUPLLIED BY STONE AND WEBSTER. ALL OTHERS ARE SUPPLIED BY WESTINGHOUSE.
   1"-6"-VGW-15X & 3/4"-VOS-15A
6. LINE 14"-RH-1-1502-Q1 IS SCHEDULED 160 PIPE. FITTINGS ON 14"-RH-1 ARE SCHEDULE 140.
7. ADJUST VALVE IN FIELD TO ESTABLISH MINI FLOW AND LOCK IN POSITION.
8. LEGEND:
   D - LOCAL DRAIN CONNECTION
   V - LOCAL VENT CONNECTION
   OMB - OUTSIDE MISSILE BARRIER
   IMB - INSIDE MISSILE BARRIER
   T - CAPPED VENT, DRAIN OR LMC
   BA - INDICATES 1/2" PT DRAIN MECH SEAL TELL-TALE BY MANUFACTURER
   * - INDICATES SUPPLIED BY MANUFACTURER
9. 1-RC-PT-1403 IS AN RC SYS INSTRUMENT LOCATED WITHIN THE RH SYS BOUNDARY

REFERENCE DRAWINGS

NUMBER	TITLE
01. 11715-FM-079A	FLOW/VON DIAGRAM,COMPONENT COOLING WATER SYSTEM
02. 11715-FM-088A	FLOW/VON DIAGRAM,FUEL PIT CLNG & REF PURIF SYSTEM
03. 11715-FM-089A	FLOW/VON DIAGRAM,SAMPLING SYSTEM
04. 11715-FM-089D	FLOW/VON DIAGRAM,SAMPLING SYSTEM
05. 11715-FM-090B	FLOW/VON DIAGRAM,VENT & DRAIN SYSTEM
06. 11715-FM-090C	FLOW/VON DIAGRAM,VENT & DRAIN SYSTEM
07. 11715-FM-091A	FLOW/VON DIAGRAM,CONT QUENCH & RECIRC SPRAY SUB SYSTEM
08. 11715-FM-093A	FLOW/VON DIAGRAM,REACTOR COOLANT SYSTEM
09. 11715-FM-093B	FLOW/VON DIAGRAM,REACTOR COOLANT SYSTEM
10. 11715-FM-094A	FLOW/VON DIAGRAM,RESIDUAL HEAT REMOVAL SYSTEM
11. 11715-FM-095B	FLOW/VON DIAGRAM,CHEM & VOLUME CONTROL SYSTEM
12. 11715-FM-095C	FLOW/VON DIAGRAM,CHEM & VOLUME CONTROL SYSTEM
13. 11715-FM-096A	FLOW/VON DIAGRAM,SAFETY INJECTION SYSTEM
14. 11715-FM-079B	FLOW/VON DIAGRAM,COMPONENT COOLING WATER SYSTEM

BYPRODUCT DRAWINGS

1. 11715-CBM-094A, SH.1	ISI CLASSIFICATION BOUNDARY DRAWING
2. DELETED	
3. 11715-SPM-094A, SH.1	ISI SYSTEM PRESSURE TESTING DRAWING

BYPRODUCT NOTES

NOTE 1: DELETED.
2: (H) HIGH SAFETY SIGNIFICANT PIPING
3: (L) LOW SAFETY SIGNIFICANT PIPING

FOR ISI CLASSIFICATION BOUNDARY DRAWING LEGEND AND SYMBOLS, SEE 11715-CBM-L&S-3
THIS CLASSIFICATION BOUNDARY DWG IS TO BE USED FOR THE THIRD TEN YEAR INSPECTION INTERVAL (04-30-1999 TO 04-30-2009)

CONTINUATION DRAWING NUMBERS REFER TO FM OR FB DRAWINGS. THE CORRESPONDING CLASSIFICATION BOUNDARY DRAWINGS (CBM OR CBD) CAN BE DETERMINED BY SUBSTITUTING CBM OR CBB FOR FM OR FB.

CAUTION:
THE BACKGROUND PORTION OF THIS BYPRODUCT DRAWING IS FOR REFERENCE ONLY. THE BACKGROUND INFORMATION IS NOT CONTROLLED AND MAY NOT REFLECT THE ACTUAL PLANT CONFIGURATION. REFER TO THE LATEST FLOW/VALVE OPERATING NUMBERS DIAGRAM FOR CONTROLLED BACKGROUND INFORMATION.

REVISION DESCRIPTION

THIS BYPRODUCT DWG ISSUED PER THE FOLLOWING FLOW/VON DIAGRAM

FLOW/VON DRAWING NO:	REV.
11715-FM -094A	16
	SH 1 OF 2

Dominion

NUCLEAR ENGINEERING
RICHMOND, VIRGINIA

ISI CLASSIFICATION BOUNDARY DWG INTERVAL-3
RESIDUAL HEAT REMOVAL SYSTEM
NORTH ANNA POWER STATION UNIT 1
VIRGINIA POWER

REVISION DESCRIPTION
REVISED PER DCR 2004-0012 & REV 16 OF FM
THIS DWG SUPERSEDES REV 1

CAD NO: C:\war\dgn\N1094A1MCB3ay1
DRAWING NO: 11715-CBM-094A-3 REV 2

DSGN AEG | SCALE: NONE | UNLESS OTHERWISE NOTED | SH 1 OF 2

PC-MF3

ALON001
18-MAR-2004 07:32
C:\war\dgn\N1094A1MCB3ay1

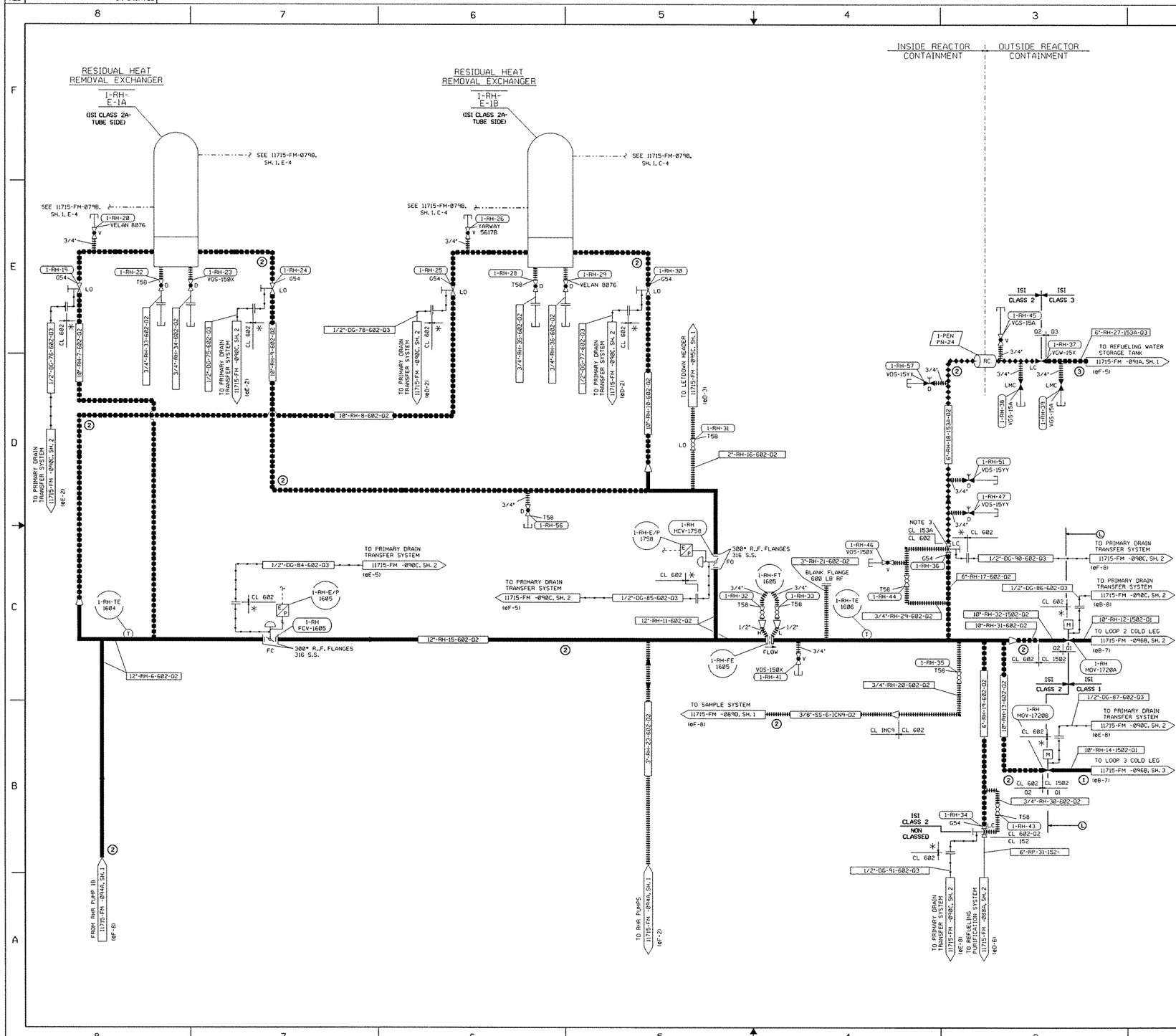

NOTES

1. FOR NOTES, SEE SHEET 1 OF THIS DRAWING.

REFERENCE DRAWINGS

NUMBER	TITLE
01. FOR ADDITIONAL REFERENCE DRAWINGS, SEE SHEET 1 OF THIS DRAWING.	
02. 11715-FM-088A	FLOW/VON DIAGRAM,FUEL PIT CLNG & REF PURIF SYSTEM
03. 11715-FM-089D	FLOW/VON DIAGRAM,SAMPLING SYSTEM
04. 11715-FM-090C	FLOW/VON DIAGRAM,VENT & DRAIN SYSTEM
05. 11715-FM-091A	FLOW/VON DIAGRAM,VENT & DRAIN SYSTEM
06. 11715-FM-095C	FLOW/VON DIAGRAM,CHEM & VOLUME CONTROL SYSTEM
07. 11715-FM-096B	FLOW/VON DIAGRAM,SAFETY INJECTION SYSTEM

BYPRODUCT DRAWINGS

1. 11715-CBM-094A, SH. 2 ISI CLASSIFICATION BOUNDARY DRAWING
2. DELETED
3. 11715-SPM-094A, SH. 2 ISI SYSTEM PRESSURE TESTING DRAWING

BYPRODUCT NOTES

NOTE 2: (L) LOW SAFETY SIGNIFICANT PIPING.

FOR ISI CLASSIFICATION BOUNDARY DRAWING LEGEND AND SYMBOLS, SEE 11715-CBM-L&S-3
THIS CLASSIFICATION BOUNDARY DWG IS TO BE USED FOR THE THIRD TEN YEAR INSPECTION INTERVAL 04-30-1999 TO 04-30-2009

CONTINUATION DRAWING NUMBERS REFER TO FM OR FB DRAWINGS. THE CORRESPONDING CLASSIFICATION BOUNDARY DRAWINGS (CBM OR CBB) CAN BE DETERMINED BY SUBSTITUTING CBM OR CBB FOR FM OR FB.

CAUTION:
THE BACKGROUND PORTION OF THIS BYPRODUCT DRAWING IS FOR REFERENCE ONLY. THE BACKGROUND INFORMATION IS NOT CONTROLLED AND MAY NOT REFLECT THE ACTUAL PLANT CONFIGURATION. REFER TO THE LATEST FLOW/VALVE OPERATING NUMBERS DIAGRAM FOR CONTROLLED BACKGROUND INFORMATION.

REVISION DESCRIPTION

THIS BYPRODUCT DWG ISSUED PER THE FOLLOWING FLOW/VON DIAGRAM

FLOW/VON DRAWING NO:	REV.
11715-FM -094A	20
	SH 2 OF 2

VIRGINIA POWER
NORTH CAROLINA POWER
NUCLEAR ENGINEERING SERVICES
RICHMOND, VIRGINIA

ISI CLASSIFICATION BOUNDARY DWG INTERVAL-3
RESIDUAL HEAT REMOVAL SYSTEM
NORTH ANNA POWER STATION UNIT 1
VIRGINIA POWER

REVISION DESCRIPTION
REVISED PER DCR 2002-0929. THIS DWG SUPERSEDES REV 1.

CAD NO: C:\usr\dgn\N1094A2MCB3sd1

DRAWING NO:	REV
11715-CBM-094A-3	2

DSGN SCC | SCALE: NONE | UNLESS OTHERWISE NOTED | SH 2 OF 2

PC-MF3

SARAH15
19-JUL-2002 07:32
C:\usr\dgn\N1094A2MCB3sd1

PRIOR TO USING FOR DESIGN WORK CHECK DMIS FOR WORK PENDING

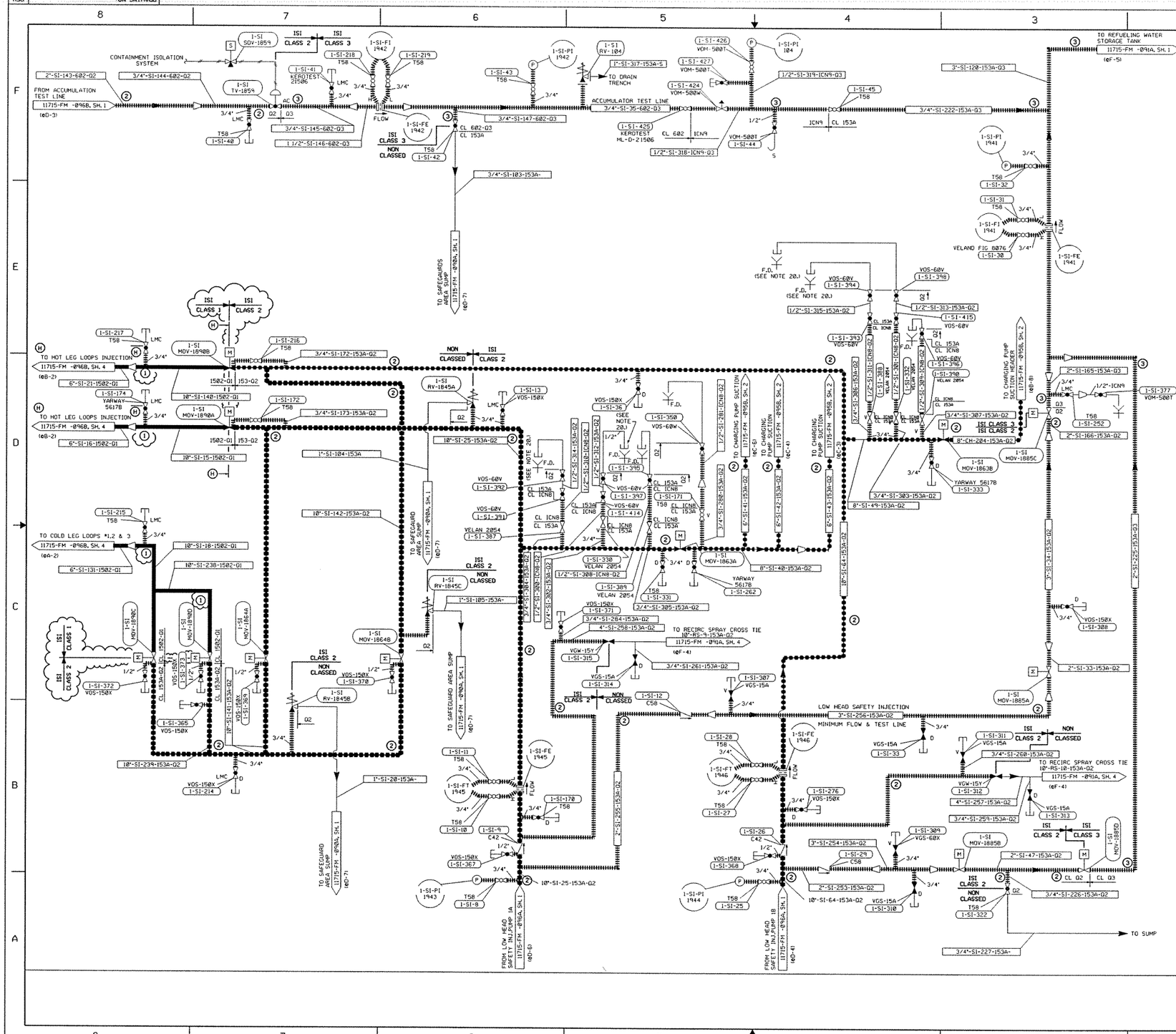

NOTES

1. FOR NOTES, SEE SHEET 1 OF THIS DRAWING.

REFERENCE DRAWINGS

NUMBER	TITLE
01. FOR ADDITIONAL REFERENCE DRAWINGS, SEE SHEET 1 OF THIS DRAWING.	
02. 11715-FM-098A	FLOW/VON DIAGRAM,VENT & DRAIN SYSTEM
03. 11715-FM-091A	FLOW/VON DIAGRAM,VENT & DRAIN SYSTEM
04. 11715-FM-095B	FLOW/VON DIAGRAM,CHEM & VOLUME CONTROL SYSTEM
05. 11715-FM-096B	FLOW/VON DIAGRAM,SAFETY INJECTION SYSTEM

BYPRODUCT DRAWINGS

1. 11715-CBM-096A, SH.2 — ISI CLASSIFICATION BOUNDARY DRAWING
2. DELETED
3. 11715-SPM-096A, SH.2 — ISI SYSTEM PRESSURE TESTING DRAWING

BYPRODUCT NOTES

NOTE 1: (H) HIGH SAFETY SIGNIFICANT PIPING

FOR ISI CLASSIFICATION BOUNDARY DRAWING LEGEND AND SYMBOLS, SEE 11715-CBM-L&S-3
THIS CLASSIFICATION BOUNDARY DWG IS TO BE USED FOR THE THIRD TEN YEAR INSPECTION INTERVAL (04-30-1999 TO 04-30-2009)

CONTINUATION DRAWING NUMBERS REFER TO FM OR FB DRAWINGS. THE CORRESPONDING CLASSIFICATION BOUNDARY DRAWINGS (CBM OR CBD) CAN BE DETERMINED BY SUBSTITUTING CBM OR CBD FOR FM OR FB.

CAUTION:
THE BACKGROUND PORTION OF THIS BYPRODUCT DRAWING IS FOR REFERENCE ONLY. THE BACKGROUND INFORMATION IS NOT CONTROLLED AND MAY NOT REFLECT THE ACTUAL PLANT CONFIGURATION. REFER TO THE LATEST FLOW/VALVE OPERATING NUMBERS DIAGRAM FOR CONTROLLED BACKGROUND INFORMATION.

REVISION DESCRIPTION

THIS BYPRODUCT DWG ISSUED PER THE FOLLOWING FLOW/VON DIAGRAM

FLOW/VON DRAWING NO:	REV.
11715-FM -096A	39
	SH 2 OF 3

Dominion

NUCLEAR ENGINEERING
RICHMOND, VIRGINIA

ISI CLASSIFICATION BOUNDARY DWG INTERVAL-3
SAFETY INJECTION SYSTEM
NORTH ANNA POWER STATION UNIT 1
VIRGINIA POWER

REVISION DESCRIPTION
REVISED PER DCR 2004-0261 AND REV 39 OF THE FM
THIS DWG SUPERSEDES REV 1

CAD NO: C:\usr\dgn\N1096A2MCB3v_j1
DRAWING NO: 11715-CBM-096A-3 REV 2

DSGN GTW | SCALE: NONE | UNLESS OTHERWISE NOTED | SH 2 OF 3

PC-MF3

WILMERG
16-FEB-2004 15:57
C:\usr\dgn\N1096A2MCB3v_j1

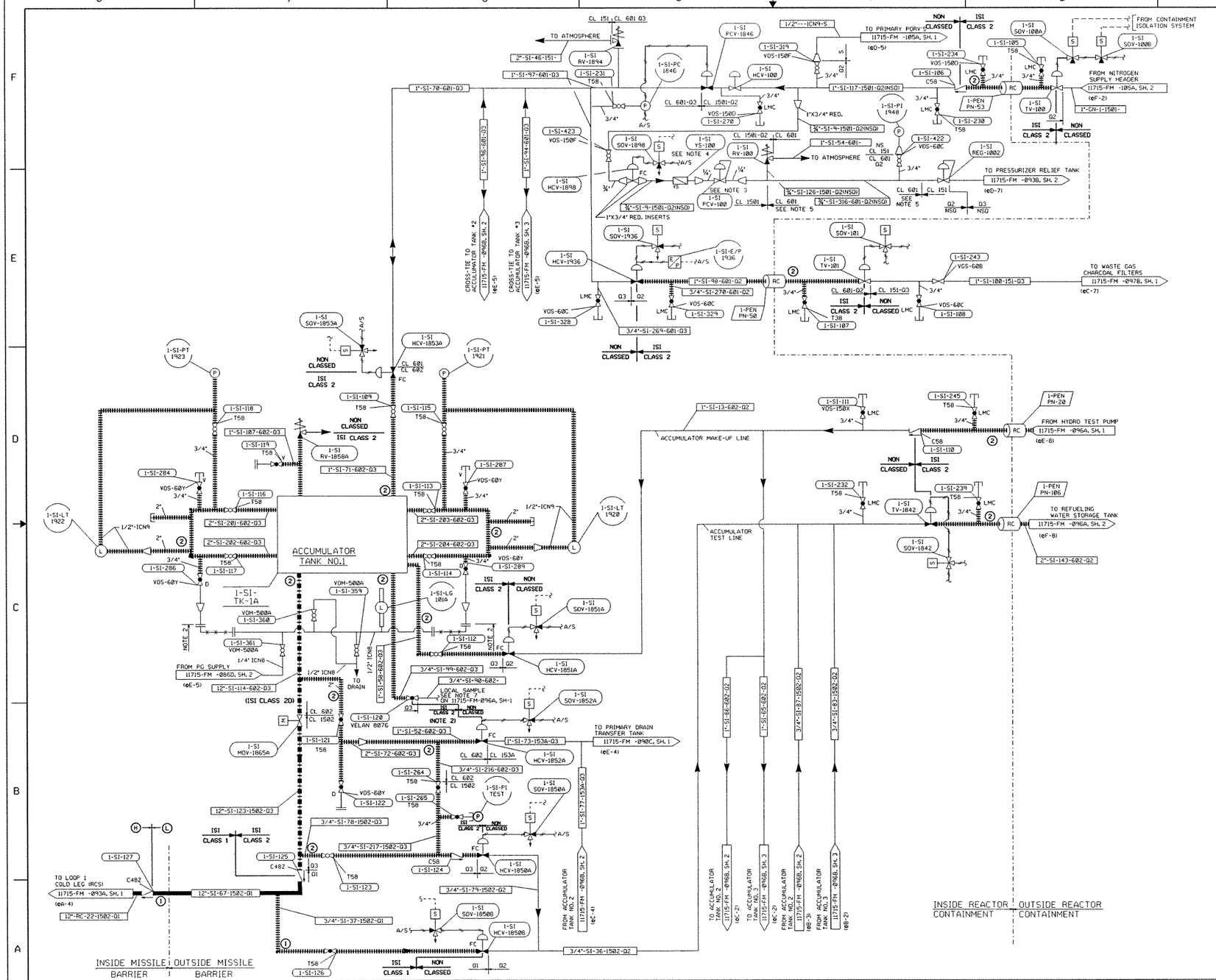

NOTES

1. FOR NOTES, SEE SHEET 1 OF 11715-FM-096A.
2. FOR INSTRUMENT CALIBRATION ONLY. TO BE DISCONNECTED DURING NORMAL PLANT OPERATION
3. PRESSURE CONTROL VALVE WITH ¼" STAINLESS STEEL PIPE NIPPLES AND ¾" TO ¼" STAINLESS STEEL REDUCING COUPLINGS SUPPLIED BY VENDOR.
4. ARMSTRONG STRAINER CISW WITH CHROME MOLY BODY AND 304 STAINLESS STEEL SCREEN.
5. THE PIPING CLASS BETWEEN PCV-100 AND REG-1002 CAN BE RELAXED DUE TO RV-100. DCP 95-185 MADE CHANGE AS SHOWN.

REFERENCE DRAWINGS

NUMBER	TITLE
01. FOR ADDITIONAL REFERENCE DRAWINGS, SEE SHEET 1 OF 11715-FM-096A.	
02. 11715-FM-090C	FLOW/VON DIAGRAM,VENT & DRAIN SYSTEM
03. 11715-FM-093A	FLOW/VON DIAGRAM,REACTOR COOLANT SYSTEM
04. 11715-FM-093B	FLOW/VON DIAGRAM,REACTOR COOLANT SYSTEM
05. 11715-FM-096A	FLOW/VON DIAGRAM,SAFETY INJECTION SYSTEM
06. 11715-FM-096B	FLOW/VON DIAGRAM,SAFETY INJECTION SYSTEM
07. 11715-FM-097B	FLOW/VON DIAGRAM,GASEOUS WASTE DISPOSAL SYSTEM
08. 11715-FM-105A	FLOW/VON DIAGRAM,PRIMARY PLANT GAS SUPPLY SYSTEM

BYPRODUCT DRAWINGS

1. 11715-CBM-096B, SH.1	ISI CLASSIFICATION BOUNDARY DRAWING
2. DELETED	
3. 11715-SPM-096B, SH.1	ISI SYSTEM PRESSURE TESTING DRAWING

BYPRODUCT NOTES

NOTE 1: DELETED.
2. (H) HIGH SAFETY SIGNIFICANT PIPING
3. (L) LOW SAFETY SIGNIFICANT PIPING

FOR ISI CLASSIFICATION BOUNDARY DRAWING LEGEND AND SYMBOLS, SEE 11715-CBM-L&S-3
THIS CLASSIFICATION BOUNDARY DWG IS TO BE USED FOR THE THIRD TEN YEAR INSPECTION INTERVAL (04-30-1999 TO 04-30-2009)

CONTINUATION DRAWING NUMBERS REFER TO FM OR FB DRAWINGS. THE CORRESPONDING CLASSIFICATION BOUNDARY DRAWINGS (CBM OR CBB) CAN BE DETERMINED BY SUBSTITUTING CBM OR CBB FOR FM OR FB.

CAUTION:
THE BACKGROUND PORTION OF THIS BYPRODUCT DRAWING IS FOR REFERENCE ONLY. THE BACKGROUND INFORMATION IS NOT CONTROLLED AND MAY NOT REFLECT THE ACTUAL PLANT CONFIGURATION. REFER TO THE LATEST FLOW/VALVE OPERATING NUMBERS DIAGRAM FOR CONTROLLED BACKGROUND INFORMATION.

REVISION DESCRIPTION

THIS BYPRODUCT DWG ISSUED PER THE FOLLOWING FLOW/VON DIAGRAM	
FLOW/VON DRAWING NO: 11715-FM -096B	REV. 24
	SH 1 OF 4

Dominion

NUCLEAR ENGINEERING
RICHMOND, VIRGINIA

ISI CLASSIFICATION BOUNDARY DWG INTERVAL-3
SAFETY INJECTION SYSTEM
NORTH ANNA POWER STATION UNIT 1
VIRGINIA POWER

REVISION DESCRIPTION
REVISED PER DCR 2004-0015 & REV 24 OF FM.
THIS DWG SUPERSEDES REV 1

CAD NO: C:\war\dgn\N1096B1MCB3sz1
DRAWING NO: 11715-CBM-096B-3 REV 2
DSGN AEG SCALE: NONE UNLESS OTHERWISE NOTED SH 1 OF 4

PC=MF3

ALON001
18-MAR-2004 07:32
C:\war\dgn\N1096B1MCB3sz1

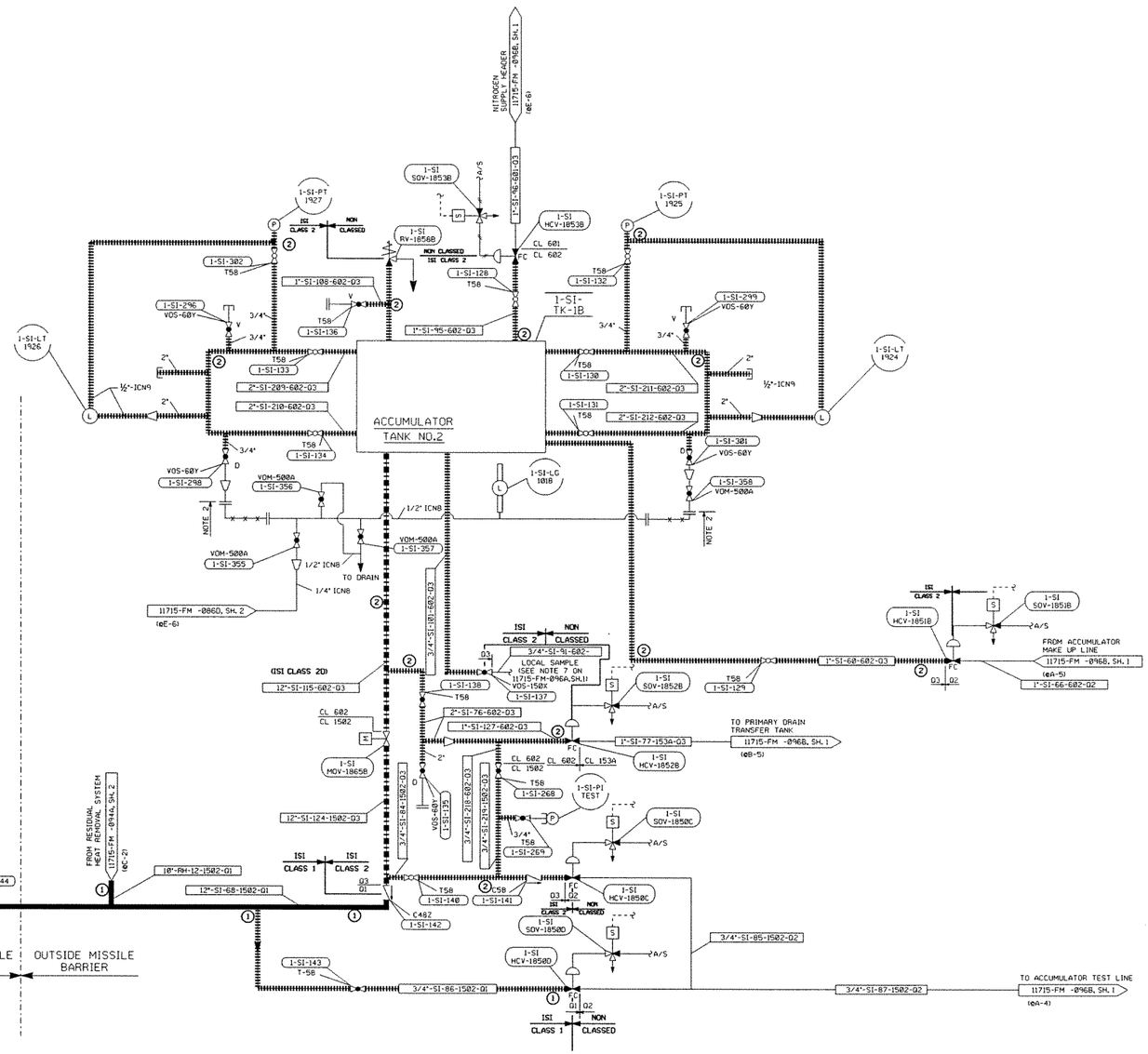

NOTES

1. FOR NOTES, SEE SHEET 1 OF THIS DRAWING.
2. FOR INSTRUMENT CALIBRATION ONLY, TO BE DISCONNECTED DURING NORMAL PLANT OPERATION

REFERENCE DRAWINGS

NUMBER	TITLE
01. FOR ADDITIONAL REFERENCE DRAWINGS, SEE SHEET 1 OF THIS DRAWING.	
02. 11715-FM-093A	FLOW/VON DIAGRAM,REACTOR COOLANT SYSTEM
03. 11715-FM-094A	FLOW/VON DIAGRAM,RESIDUAL HEAT REMOVAL SYSTEM
04. 11715-FM-096B	FLOW/VON DIAGRAM,SAFETY INJECTION SYSTEM
05. 11715-FM-096A	FLOW/VON DIAGRAM,SAFETY INJECTION SYSTEM

BYPRODUCT DRAWINGS

1. 11715-CBM-096B, SH.2 — ISI CLASSIFICATION BOUNDARY DRAWING
2. DELETED
3. 11715-SPM-096B, SH.2 — ISI SYSTEM PRESSURE TESTING DRAWING

BYPRODUCT NOTES

NOTE 1: DELETED.
2: (H) HIGH SAFETY SIGNIFICANT PIPING
3: (L) LOW SAFETY SIGNIFICANT PIPING

FOR ISI CLASSIFICATION BOUNDARY DRAWING LEGEND AND SYMBOLS, SEE 11715-CBM-L&S-3
THIS CLASSIFICATION BOUNDARY DWG IS TO BE USED FOR THE THIRD TEN YEAR INSPECTION INTERVAL (04-30-1999 TO 04-30-2009)

CONTINUATION DRAWING NUMBERS REFER TO FM OR FB DRAWINGS. THE CORRESPONDING CLASSIFICATION BOUNDARY DRAWINGS (CBM OR CBB) CAN BE DETERMINED BY SUBSTITUTING CBM OR CBB FOR FM OR FB.

CAUTION:
THE BACKGROUND PORTION OF THIS BYPRODUCT DRAWING IS FOR REFERENCE ONLY. THE BACKGROUND INFORMATION IS NOT CONTROLLED AND MAY NOT REFLECT THE ACTUAL PLANT CONFIGURATION. REFER TO THE LATEST FLOW/VALVE OPERATING NUMBERS DIAGRAM FOR CONTROLLED BACKGROUND INFORMATION.

REVISION DESCRIPTION

THIS BYPRODUCT DWG ISSUED PER THE FOLLOWING FLOW/VON DIAGRAM	
FLOW/VON DRAWING NO: 11715-FM -096B	REV. 20
	SH 2 OF 4

Dominion
NUCLEAR ENGINEERING
RICHMOND, VIRGINIA

ISI CLASSIFICATION BOUNDARY DWG INTERVAL-3
SAFETY INJECTION SYSTEM
NORTH ANNA POWER STATION UNIT 1
VIRGINIA POWER

REVISION DESCRIPTION
REVISED PER DCR 2004-0013 & REV 20 OF FM. THIS DWG SUPERSEDES REV 1

CAD NO: C:\war\dgn\N1096B2MCB3:01
DRAWING NO: 11715-CBM-096B-3 REV 2

DSGN AEG | SCALE: NONE | UNLESS OTHERWISE NOTED | SH 2 OF 4

PC-MF3

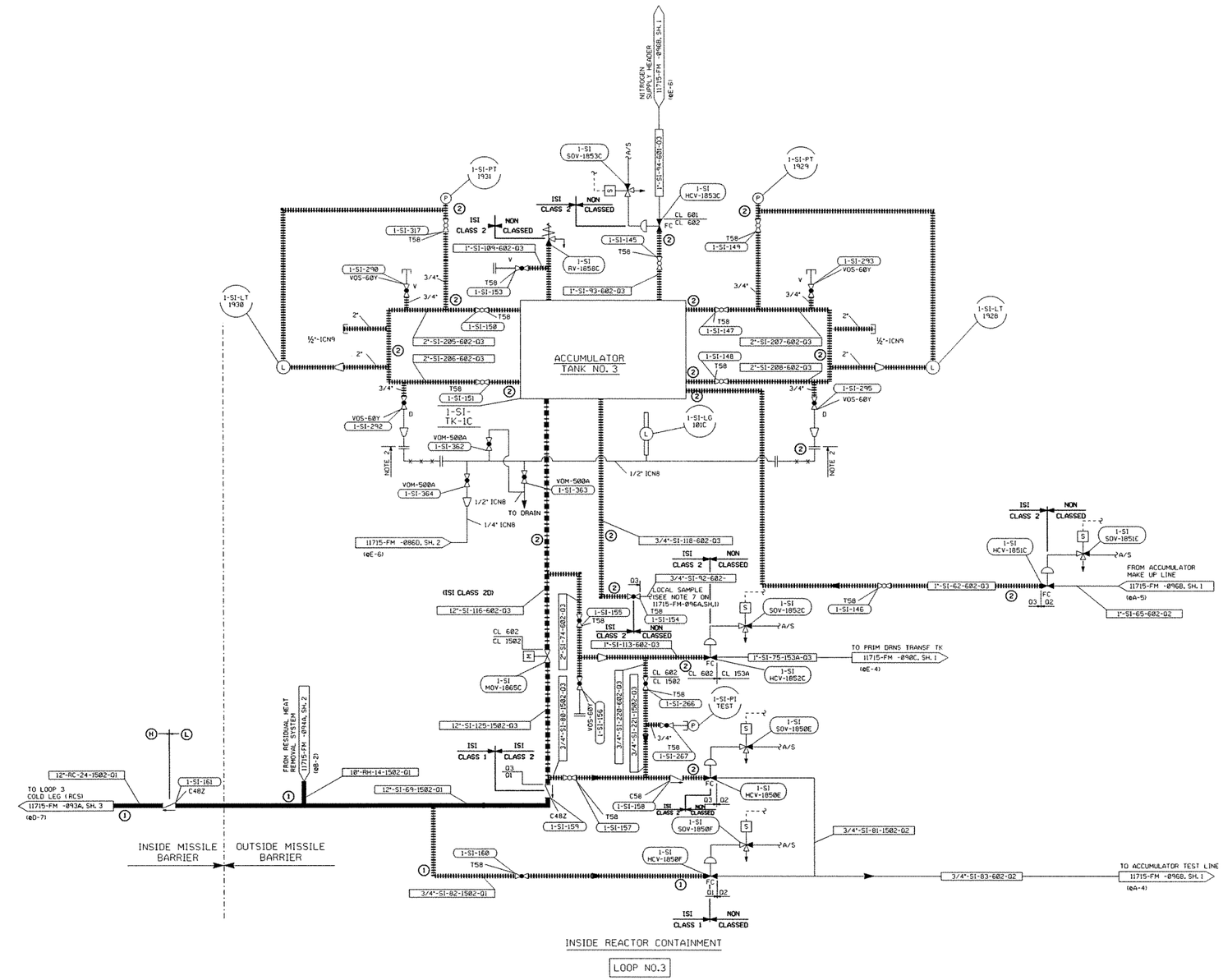

NOTES

1. FOR NOTES, SEE SHEET 1 OF THIS DRAWING.
2. FOR INSTRUMENT CALIBRATION ONLY. TO BE DISCONNECTED DURING NORMAL PLANT OPERATION

REFERENCE DRAWINGS

NUMBER	TITLE
01. FOR ADDITIONAL REFERENCE DRAWINGS, SEE SHEET 1 OF THIS DRAWING.	
02. 11715-FM-086A	FLOW/VON DIAGRAM,BORON RECOVERY SYSTEM
03. 11715-FM-090C	FLOW/VON DIAGRAM,VENT & DRAIN SYSTEM
04. 11715-FM-094A	FLOW/VON DIAGRAM,RESIDUAL HEAT REMOVAL SYSTEM
05. 11715-FM-096B	FLOW/VON DIAGRAM,SAFETY INJECTION SYSTEM
06. 11715-FM-096A	FLOW/VON DIAGRAM,SAFETY INJECTION SYSTEM

BYPRODUCT DRAWINGS

BYPRODUCT NOTES

NOTE 1: DELETED.
2: (H) HIGH SAFETY SIGNIFICANT PIPING
3: (L) LOW SAFETY SIGNIFICANT PIPING

FOR ISI CLASSIFICATION BOUNDARY DRAWING LEGEND AND SYMBOLS, SEE 11715-CBM-L&S-3
THIS CLASSIFICATION BOUNDARY DWG IS TO BE USED FOR THE THIRD TEN YEAR INSPECTION INTERVAL 04-30-1999 TO 04-30-2009

CONTINUATION DRAWING NUMBERS REFER TO FM OR FB DRAWINGS. THE CORRESPONDING CLASSIFICATION BOUNDARY DRAWINGS (CBM OR CBD) CAN BE DETERMINED BY SUBSTITUTING CBM OR CBD FOR FM OR FB.

CAUTION:
THE BACKGROUND PORTION OF THIS BYPRODUCT DRAWING IS FOR REFERENCE ONLY. THE BACKGROUND INFORMATION IS NOT CONTROLLED AND MAY NOT REFLECT THE ACTUAL PLANT CONFIGURATION. REFER TO THE LATEST FLOW/VALVE OPERATING NUMBERS DIAGRAM FOR CONTROLLED BACKGROUND INFORMATION.

REVISION DESCRIPTION

THIS BYPRODUCT DWG ISSUED PER THE FOLLOWING FLOW/VON DIAGRAM	
FLOW/VON DRAWING NO: 11715-FM -096B	REV. 18
	SH 3 OF 4

Dominion

NUCLEAR ENGINEERING
RICHMOND, VIRGINIA

ISI CLASSIFICATION BOUNDARY DWG INTERVAL-3
SAFETY INJECTION SYSTEM
NORTH ANNA POWER STATION UNIT 1
VIRGINIA POWER

REVISION DESCRIPTION		
REVISED PER DCR 2004-0014 & REV 16 OF FM. THIS DWG SUPERSEDES REV 1	CAD NO: C:\usr\dgn\N109683MCB3t11	
	DRAWING NO: 11715-CBM-096B-3	REV 2
DSGN AEG	SCALE: NONE	UNLESS OTHERWISE NOTED SH 3 OF 4

PC-MF3

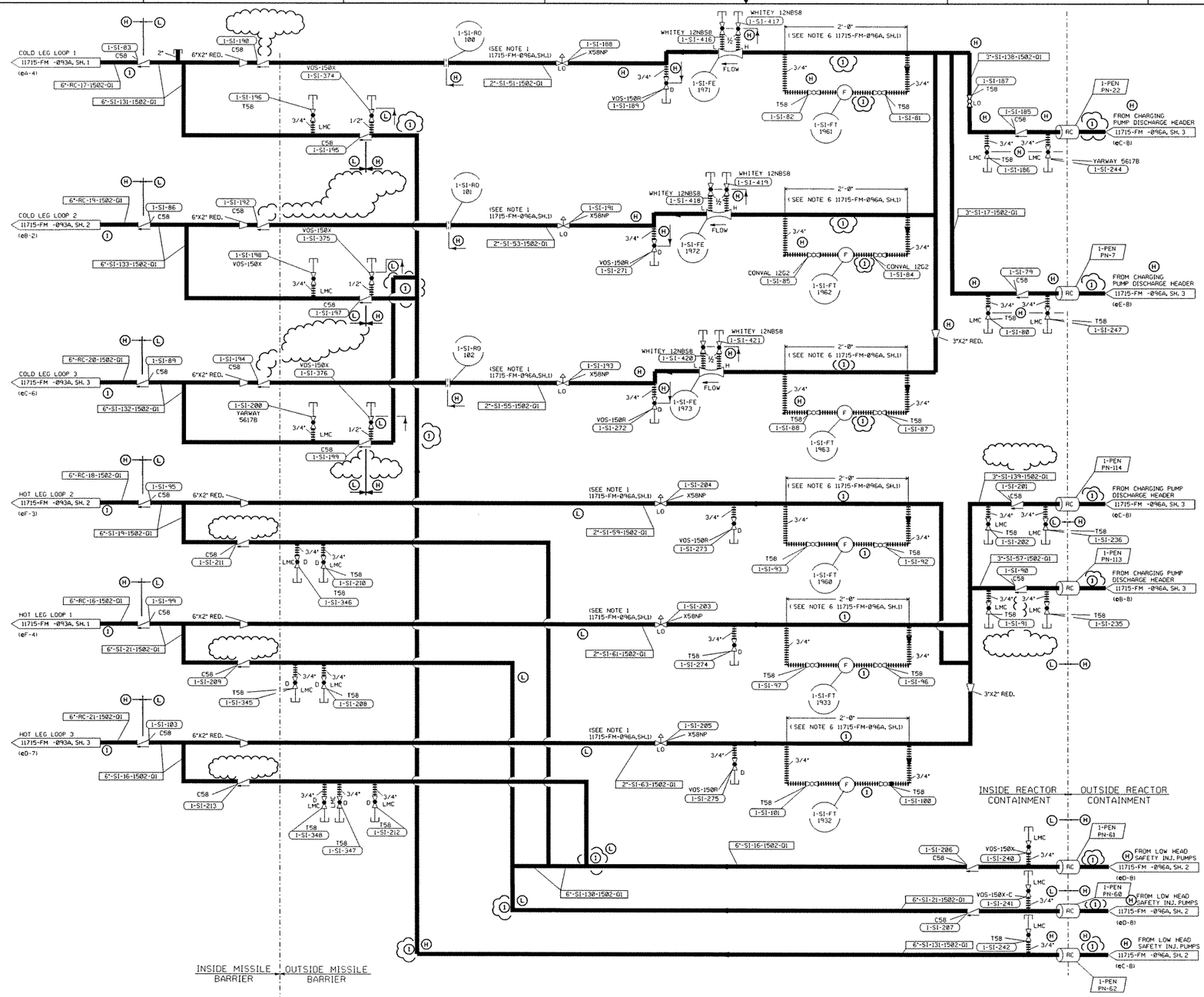

NOTES

1. FOR NOTES, SEE SHEET 1 OF THIS DRAWING.

REFERENCE DRAWINGS

NUMBER	TITLE
01. FOR ADDITIONAL REFERENCE DRAWINGS, SEE SHEET 1 OF THIS DRAWING.	
02. 11715-FM-093A	FLOW/VON DIAGRAM,REACTOR COOLANT SYSTEM
03. 11715-FM-096A	FLOW/VON DIAGRAM,SAFETY INJECTION SYSTEM

BYPRODUCT DRAWINGS

1. 11715-CBM-096B, SH. 4	ISI CLASSIFICATION BOUNDARY DRAWING
2. DELETED	
3. 11715-SPM-096B, SH. 4	ISI SYSTEM PRESSURE TESTING DRAWING

BYPRODUCT NOTES

NOTE 1) DELETED

2) (H) HIGH SAFETY SIGNIFICANT PIPING

3) (L) LOW SAFETY SIGNIFICANT PIPING

FOR ISI CLASSIFICATION BOUNDARY DRAWING LEGEND AND SYMBOLS, SEE 11715-CBM-L&S-3
THIS CLASSIFICATION BOUNDARY DWG IS TO BE USED FOR THE THIRD TEN YEAR INSPECTION INTERVAL (04-30-1999 TO 04-30-2009)

CONTINUATION DRAWING NUMBERS REFER TO FM OR FB DRAWINGS. THE CORRESPONDING CLASSIFICATION BOUNDARY DRAWINGS (CBM OR CBD) CAN BE DETERMINED BY SUBSTITUTING CBM OR CBB FOR FM OR FB.

CAUTION:
THE BACKGROUND PORTION OF THIS BYPRODUCT DRAWING IS FOR REFERENCE ONLY. THE BACKGROUND INFORMATION IS NOT CONTROLLED AND MAY NOT REFLECT THE ACTUAL PLANT CONFIGURATION. REFER TO THE LATEST FLOW/VALVE OPERATING NUMBERS DIAGRAM FOR CONTROLLED BACKGROUND INFORMATION.

REVISION DESCRIPTION

THIS BYPRODUCT DWG ISSUED PER THE FOLLOWING FLOW/VON DIAGRAM	
FLOW/VON DRAWING NO: 11715-FM -096B	REV. 25
	SH 4 OF 4

Dominion

NUCLEAR ENGINEERING
RICHMOND, VIRGINIA

ISI CLASSIFICATION BOUNDARY DWG INTERVAL-3
SAFETY INJECTION SYSTEM
NORTH ANNA POWER STATION UNIT 1
VIRGINIA POWER

REVISION DESCRIPTION	CAD NO: C:\war\dgn\N1096B4MCB3qy1	
REVISED PER DCR 2004-0259 AND REV 25 OF THE FM. THIS DWG SUPERSEDES REV 2.	DRAWING NO: 11715-CBM-096B-3	REV 3
DSGN ANM	SCALE: NONE	UNLESS OTHERWISE NOTED SH 4 OF 4

PC-MF3

WILMERG
30-APR-2004 10:12
C:\war\dgn\N1096B4MCB3qy1

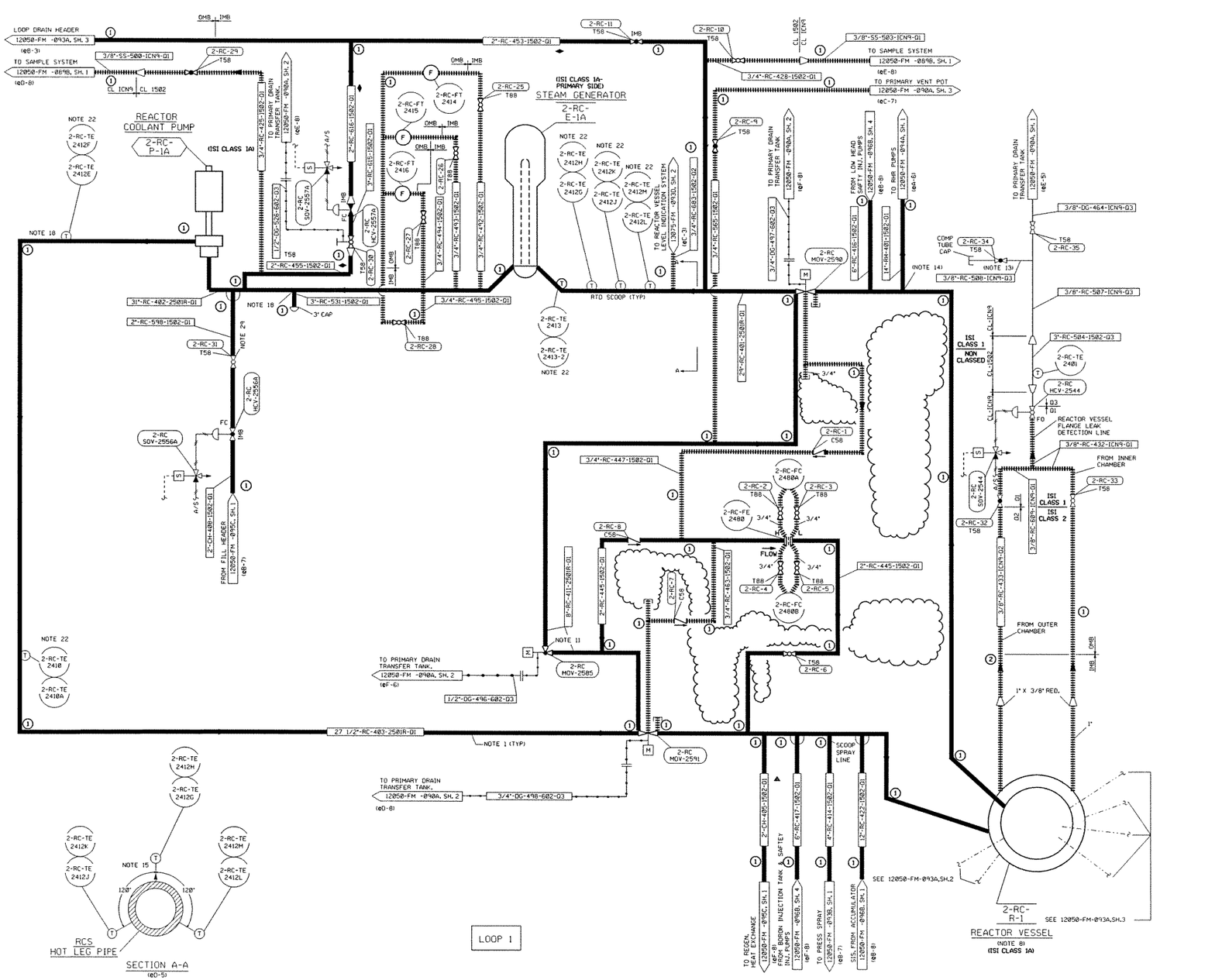

NOTES

1. 27 1/2", 29" AND 31" REFER TO INSIDE DIAMETER.
2. ALL CLASS 2501R PIPING SUPPLIED BY WESTINGHOUSE FOR DETAILS SEE W SPEC. G-677352 & G-676262
   ALL OTHER CLASSES-PIPING SPEC. NAS-28.
3. ALL HIGH PRESSURE VENTS & DRAINS TO BE BLANKED OFF WITH 1500 LB. TP 316SS BLIND FLANGE DURING NORMAL OPERATION.
4. ARRANGE SO THAT SPRAY VALVES WILL HAVE A WATER SEAL, NO INSULATION REQD.
5. GLOBE VALVES NORMALLY INSTALLED WITH FLOW UNDER SEAT.
6. PROVIDE EXTENTION STEM FOR ADJUSTMENT DURING NORMAL OPERATION.
7. SYMBOLS - VIRGINIA POWER GENERAL NUCLEAR STANDARDS APPENDIX A-STD-GN-0013.
8. ACCESS FOR INSPECTION OF REACTOR COOLANT PIPE TO REACTOR VESSEL NOZZLE WELDS TO BE PROVIDED.
9. TEST CONNECTION FOR LOOP STOP VALVES ANALYSIS. CONNS. TO BE USED FOR LOOP LEVEL MON. FOR PARTIALLY DR. LOOP DURING MANTAINANCE.
10. PLACE DETECTORS AT BOTTOM OF PIPE.
11. 0.25" HOLE THROUGH VALVE PLUG.
12. LOCATE BELOW ELEVATION OF REACTOR VESSEL FLANGE.
13. LOCATE COLLECTION POINT FOR DETERMINING LEAKAGE RATE.
14. LOCATE COLLECTION POINT 45 DEGREES BELOW HORIZONTAL CENTER LINE.
15. HOT LEG BYPASS LINE SCOOPS - ALL LOCATED IN SAME CROSS-SECTIONAL PLANE (SEE SECTION A-A).
16. DELETED

17. DELETED
    (NOTES CONTINUED ON 12050-FM-093A,SH 2)

REFERENCE DRAWINGS

NUMBER	TITLE
01. 12050-FM-079A	FLOW/VON DIAGRAM,COMPONENT COOLING WATER SYSTEM
02. 11715-FM-086A	FLOW/VON DIAGRAM,BORON RECOVERY SYSTEM
03. 11715-FM-086D	FLOW/VON DIAGRAM,BORON RECOVERY SYSTEM
04. 12050-FM-089A	FLOW/VON DIAGRAM,SAMPLING SYSTEM
05. 12050-FM-089B	FLOW/VON DIAGRAM,SAMPLING SYSTEM
06. 12050-FM-090A	FLOW/VON DIAGRAM,VENT & DRAIN SYSTEM
07. 12050-FM-090B	FLOW/VON DIAGRAM,VENT & DRAIN SYSTEM
08. 12050-FM-093B	FLOW/VON DIAGRAM,REACTOR COOLANT SYSTEM
09. 12050-FM-094A	FLOW/VON DIAGRAM,RESIDUAL HEAT REMOVAL SYSTEM
10. 12050-FM-095B	FLOW/VON DIAGRAM,CHEM & VOLUME CONTROL SYSTEM
11. 12050-FM-095C	FLOW/VON DIAGRAM,CHEM & VOLUME CONTROL SYSTEM
12. 12050-FM-096A	FLOW/VON DIAGRAM,SAFETY INJECTION SYSTEM
13. 12050-FM-096B	FLOW/VON DIAGRAM,SAFETY INJECTION SYSTEM
14. 12050-FM-096C	FLOW/VON DIAGRAM,SAFETY INJECTION SYSTEM
15. 13075-FM-093D	FLOW/VON DIAGRAM,REACTOR COOLANT SYSTEM

BYPRODUCT DRAWINGS

1. 12050-CBM-093A, SH.1	ISI CLASSIFICATION BOUNDARY DRAWING
2. DELETED	
3. 12050-SPM-093A, SH.1	ISI SYSTEM PRESSURE TESTING DRAWING

BYPRODUCT NOTES

NOTE 1: SEE EWR-86-489 FOR DETAILS OF THE ISI CLASSIFICATION BASIS.

FOR ISI CLASSIFICATION BOUNDARY DRAWING LEGEND AND SYMBOLS, SEE 12050-CBM-L&S-3
THIS CLASSIFICATION BOUNDARY DRAWING IS TO BE USED FOR THE 3rd TEN YEAR INSPECTION INTERVAL.

CONTINUATION DRAWING NUMBERS REFER TO FM OR FB DRAWINGS. THE CORRESPONDING CLASSIFICATION BOUNDARY DRAWINGS (CBM OR CBB) CAN BE DETERMINED BY SUBSTITUTING CBM OR CBB FOR FM OR FB.

CAUTION:
THE BACKGROUND PORTION OF THIS BYPRODUCT DRAWING IS FOR REFERENCE ONLY. THE BACKGROUND INFORMATION IS NOT CONTROLLED AND MAY NOT REFLECT THE ACTUAL PLANT CONFIGURATION. REFER TO THE LATEST FLOW/VALVE OPERATING NUMBERS DIAGRAM FOR CONTROLLED BACKGROUND INFORMATION.

REVISION DESCRIPTION

THIS BYPRODUCT DWG ISSUED PER THE FOLLOWING FLOW/VON DIAGRAM	
FLOW/VON DRAWING NO: 12050-FM -093A	REV. 33
	SH 1 OF 3

Dominion

NUCLEAR ENGINEERING
RICHMOND, VIRGINIA

ISI CLASSIFICATION BOUNDARY DWG INTERVAL-3
REACTOR COOLANT SYSTEM - LOOP 1
NORTH ANNA POWER STATION UNIT 2
VIRGINIA POWER

REVISION DESCRIPTION	CAD NO: C:\war\dgn\N2093A1MCB3np1	
REVISED PER DCP 00-112/DCR 2002-1772A AND REV 33 OF FM THIS DWG SUPERSEDES REV 0	DRAWING NO: 12050-CBM-093A-3	REV 1
DSGN GTW	SCALE: NONE UNLESS OTHERWISE NOTED	SH 1 OF 3

PC-MF3

WILMERG
04-DEC-2002 07:07
C:\war\dgn\N2093A1MCB3np1

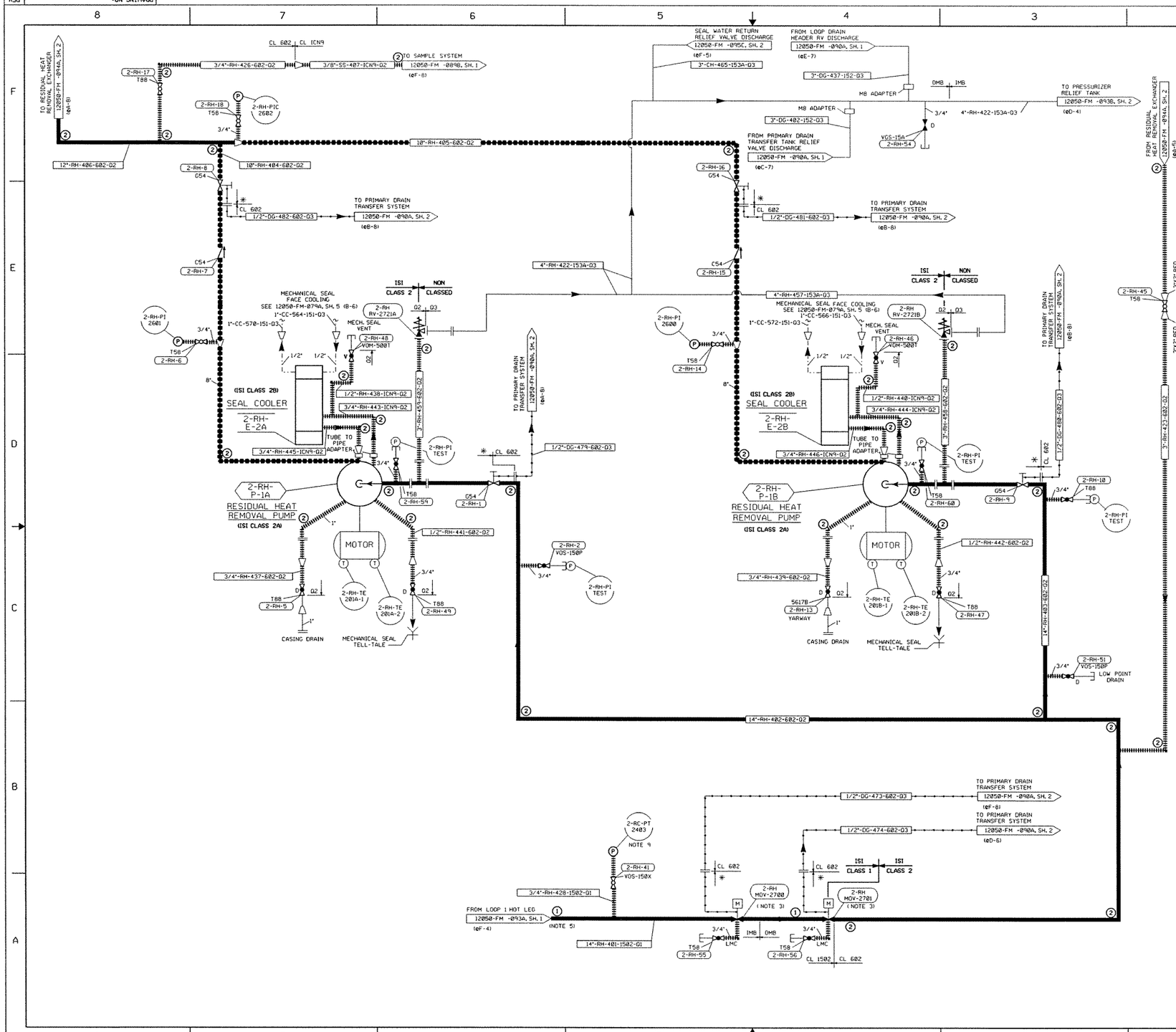

NOTES

1. ✳ INDICATES SUPPLIED BY MANUFACTURER
2. VALVES ARE NORMALLY INSTALLED WITH FLOW UNDER SEAT.
3. REACTOR COOLANT PRESSURE INTERLOCK PREVENTS ISOLATION VALVE BEING OPEN ABOVE SET PRESSURE.
4. LOCATE ISOLATION VALVE CLOSE TO MAIN HEADER.
5. LOCATE CONNECTION IN BOTTOM HALF OF REACTOR COOLANT PIPING ON 45° ANGLE TO VERTICAL.
6. THE 6"-VGW-15X VALVE AND THE 3/4"-VGS-15A VALVES ARE SUPPLIED BY STONE AND WEBSTER, ALL OTHERS SUPPLIED BY WESTINGHOUSE.
7. LINE 14"-RH-401 IS PARTIALLY SCHEDULE 160 PIPE AND FITTINGS ARE SCHEDULE 160
8. LEGEND:
   - D - LOCAL DRAIN CONNECTION
   - V - LOCAL VENT CONNECTION
   - OMB - OUTSIDE MISSILE BARRIER
   - IMB - INSIDE MISSILE BARRIER
   - ⊤ - CAPPED VENT, DRAIN, OR LMC
   - AC - INDICATES MANUAL VALVE POSITION (MAINTAINED BY ADMINISTRATIVE CONTROL CONSIDERED EQUAL TO A LOCKED VALVE)
   - FO - FAILS OPEN
   - FC - FAILS CLOSED
9. 2-RC-PT-2403 IS AN RC SYSTEM INSTRUMENT LOCATED WITHIN THE RH SYSTEM BOUNDARY

REFERENCE DRAWINGS

NUMBER	TITLE
01. 12050-FM-079A	FLOW/VON DIAGRAM,COMPONENT COOLING WATER SYSTEM
02. 12050-FM-089B	FLOW/VON DIAGRAM,SAMPLING SYSTEM
03. 12050-FM-090A	FLOW/VON DIAGRAM,VENT & DRAIN SYSTEM
04. 12050-FM-091A	FLOW/VON DIAGRAM,CONT QUENCH & RECIRC SPRAY SYS
05. 12050-FM-093A	FLOW/VON DIAGRAM,REACTOR COOLANT SYSTEM
06. 12050-FM-093B	FLOW/VON DIAGRAM,REACTOR COOLANT SYSTEM
07. 12050-FM-095B	FLOW/VON DIAGRAM,CHEM & VOLUME CONTROL SYSTEM
08. 12050-FM-095C	FLOW/VON DIAGRAM,CHEM & VOLUME CONTROL SYSTEM
09. 12050-FM-096A	FLOW/VON DIAGRAM,SAFETY INJECTION SYSTEM
10. 12050-FM-096B	FLOW/VON DIAGRAM,SAFETY INJECTION SYSTEM
11. 11715-FM-088A	FLOW/VON DIAGRAM,FUEL PIT CLNG & REF PURIF SYSTEM

BYPRODUCT DRAWINGS

1. 12050-CBM-094A, SH.1 — ISI CLASSIFICATION BOUNDARY DRAWING
2. DELETED
3. 12050-SPM-094A, SH.1 — ISI SYSTEM PRESSURE TESTING DRAWING

BYPRODUCT NOTES

NOTE 1: SEE EWR-86-489 FOR DETAILS OF THE ISI CLASSIFICATION BASIS.

FOR ISI CLASSIFICATION BOUNDARY DRAWING LEGEND AND SYMBOLS, SEE 12050-CBM-L&S-3
THIS CLASSIFICATION BOUNDARY DRAWING IS TO BE USED FOR THE 3rd TEN YEAR INSPECTION INTERVAL.

CONTINUATION DRAWING NUMBERS REFER TO FM OR FB DRAWINGS. THE CORRESPONDING CLASSIFICATION BOUNDARY DRAWINGS (CBM OR CBD) CAN BE DETERMINED BY SUBSTITUTING CBM OR CBD FOR FM OR FB.

CAUTION:
THE BACKGROUND PORTION OF THIS BYPRODUCT DRAWING IS FOR REFERENCE ONLY. THE BACKGROUND INFORMATION IS NOT CONTROLLED AND MAY NOT REFLECT THE ACTUAL PLANT CONFIGURATION. REFER TO THE LATEST FLOW/VALVE OPERATING NUMBERS DIAGRAM FOR CONTROLLED BACKGROUND INFORMATION.

REVISION DESCRIPTION

THIS BYPRODUCT DWG ISSUED PER THE FOLLOWING FLOW/VON DIAGRAM

FLOW/VON DRAWING NO:	REV.
12050-FM -094A	20
	SH 1 OF 2

VIRGINIA POWER
NORTH CAROLINA POWER

NUCLEAR ENGINEERING SERVICES
RICHMOND, VIRGINIA

ISI CLASSIFICATION BOUNDARY DWG INTERVAL-3
RESIDUAL HEAT REMOVAL SYSTEM
NORTH ANNA POWER STATION UNIT 2
VIRGINIA POWER

REVISION DESCRIPTION
ORIGINAL ISSUE PER DCR 2001-674 AND REV 20 OF FM.

CAD NO: C:\usr\dgn\N2094A1MCB3jc1

DRAWING NO: 12050-CBM-094A-3 — REV 0

DSGN SCC | SCALE: NONE | UNLESS OTHERWISE NOTED | SH 1 OF 2

PC-MF3

SARAH15
30-MAY-2001 09:45
C:\usr\dgn\N2094A1MCB3jc1

PRIOR TO USING FOR DESIGN WORK CHECK DMIS FOR WORK PENDING

DRAWING NO. 12050-CBM-094A-3 REV 0 SH 1 OF 2

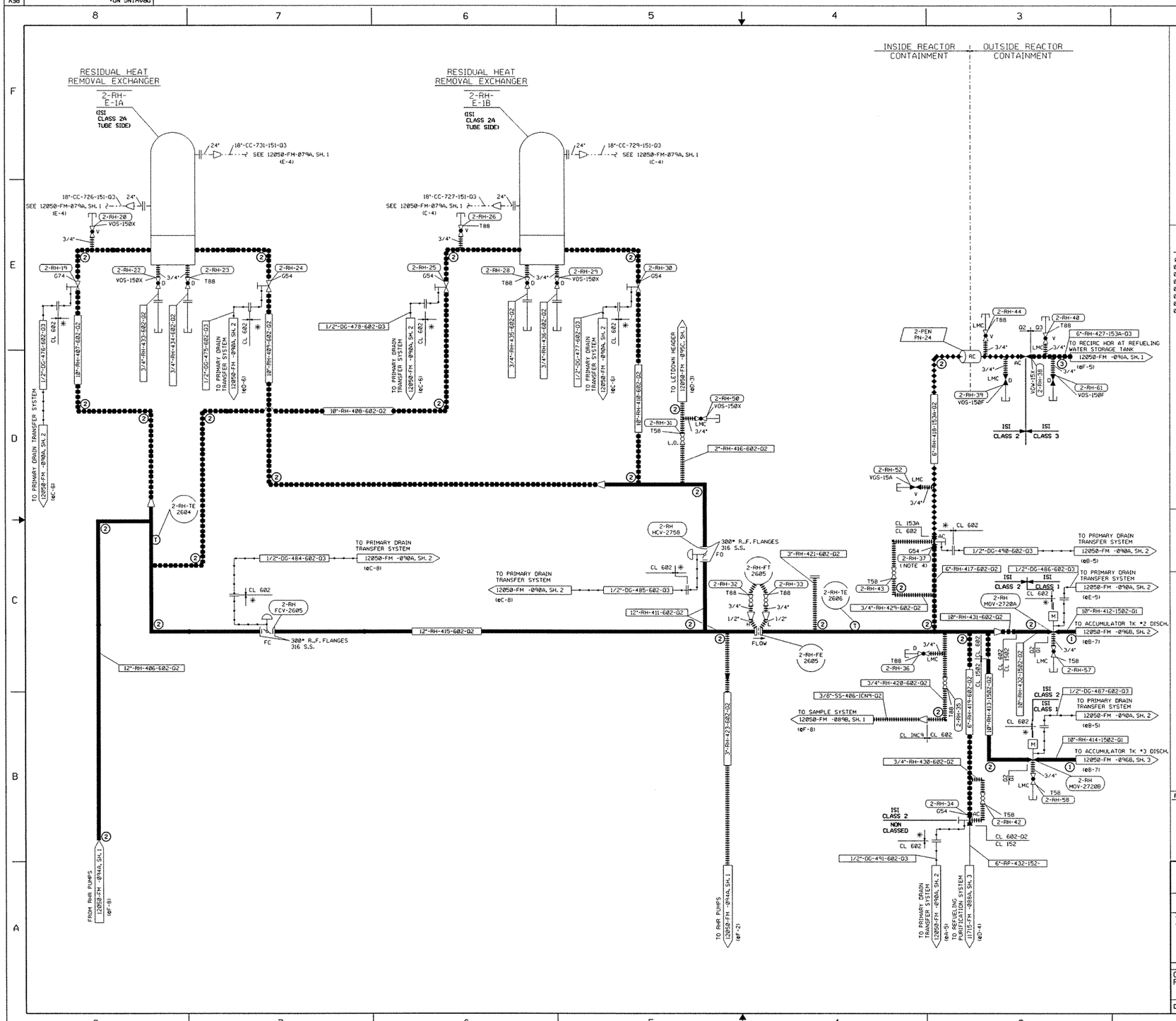

NOTES

1. FOR NOTES, SEE SHEET 1 OF THIS DRAWING.

REFERENCE DRAWINGS

NUMBER	TITLE
01. FOR ADDITIONAL REFERENCE DRAWINGS, SEE SHEET 1 OF THIS DRAWING.	
02. 12050-FM-079A	FLOW/VON DIAGRAM,COMPONENT COOLING WATER SYSTEM
03. 12050-FM-089B	FLOW/VON DIAGRAM,SAMPLING SYSTEM
04. 12050-FM-090A	FLOW/VON DIAGRAM,VENT & DRAIN SYSTEM
05. 12050-FM-091A	FLOW/VON DIAGRAM,CONT QUENCH & RECIRC SPRAY SYS
06. 12050-FM-095C	FLOW/VON DIAGRAM,CHEM & VOLUME CONTROL SYSTEM
07. 12050-FM-096B	FLOW/VON DIAGRAM,SAFETY INJECTION SYSTEM
08. 11715-FM-088A	FLOW/VON DIAGRAM,FUEL PIT CLNG & REF PURIF SYSTEM

BYPRODUCT DRAWINGS

1. 12050-CBM-094A, SH.2 — ISI CLASSIFICATION BOUNDARY DRAWING
2. DELETED
3. 12050-SPM-094A, SH.2 — ISI SYSTEM PRESSURE TESTING DRAWING

BYPRODUCT NOTES

NOTE 1: SEE EWR-86-489 FOR DETAILS OF THE ISI CLASSIFICATION BASIS.

FOR ISI CLASSIFICATION BOUNDARY DRAWING LEGEND AND SYMBOLS, SEE 12050-CBM-L&S-3
THIS CLASSIFICATION BOUNDARY DRAWING IS TO BE USED FOR THE 3rd TEN YEAR INSPECTION INTERVAL.

CONTINUATION DRAWING NUMBERS REFER TO FM OR FB DRAWINGS. THE CORRESPONDING CLASSIFICATION BOUNDARY DRAWINGS (CBM OR CBD) CAN BE DETERMINED BY SUBSTITUTING CBM OR CBD FOR FM OR FB.

CAUTION:
THE BACKGROUND PORTION OF THIS BYPRODUCT DRAWING IS FOR REFERENCE ONLY. THE BACKGROUND INFORMATION IS NOT CONTROLLED AND MAY NOT REFLECT THE ACTUAL PLANT CONFIGURATION. REFER TO THE LATEST FLOW/VALVE OPERATING NUMBERS DIAGRAM FOR CONTROLLED BACKGROUND INFORMATION.

REVISION DESCRIPTION

THIS BYPRODUCT DWG ISSUED PER THE FOLLOWING FLOW/VON DIAGRAM

FLOW/VON DRAWING NO:	REV.
12050-FM -094A	18
	SH 2 OF 2

VIRGINIA POWER
NORTH CAROLINA POWER
NUCLEAR ENGINEERING SERVICES
RICHMOND, VIRGINIA

ISI CLASSIFICATION BOUNDARY DWG INTERVAL-3
RESIDUAL HEAT REMOVAL SYSTEM
NORTH ANNA POWER STATION UNIT 2
VIRGINIA POWER

REVISION DESCRIPTION
ORIGINAL ISSUE PER DCR 2001-675 AND REV 18 OF FM.

CAD NO: C:\usr\dgn\N2094A2MCB3wq1
DRAWING NO: 12050-CBM-094A-3 REV 0

DSGN SCC | SCALE: NONE | UNLESS OTHERWISE NOTED | SH 2 OF 2

PC:MF3

SARAH15
23-MAY-2001 08:02
C:\usr\dgn\N2094A2MCB3wq1

PRIOR TO USING FOR DESIGN WORK CHECK DMIS FOR WORK PENDING

REV	DRAWING NO:
1	12050-CBM-096A-3

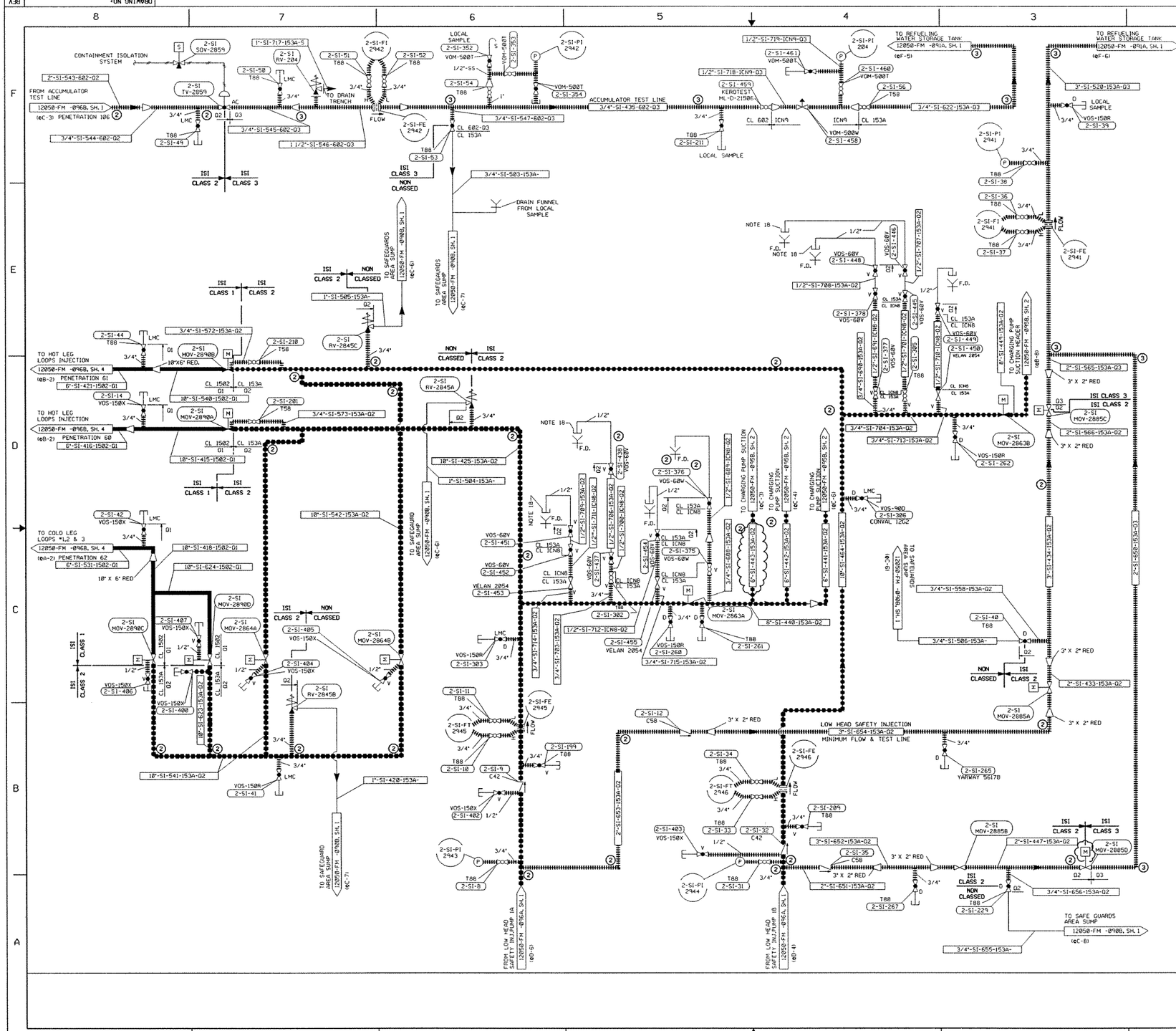

NOTES

1. FOR NOTES, SEE SHEET 1 OF THIS DRAWING.

REFERENCE DRAWINGS

NUMBER	TITLE
01. FOR ADDITIONAL REFERENCE DRAWINGS, SEE SHEET 1 OF THIS DRAWING.	
02. 12050-FM-090B	FLOW/VON DIAGRAM,VENT & DRAIN SYSTEM
03. 12050-FM-091A	FLOW/VON DIAGRAM,CONT QUENCH & RECIRC SPRAY SYS
04. 12050-FM-095B	FLOW/VON DIAGRAM,CHEM & VOLUME CONTROL SYSTEM
05. 12050-FM-096B	FLOW/VON DIAGRAM,SAFETY INJECTION SYSTEM

BYPRODUCT DRAWINGS

1. 12050-CBM-096A, SH.2 — ISI CLASSIFICATION BOUNDARY DRAWING
2. DELETED
3. 12050-SPM-096A, SH.2 — ISI SYSTEM PRESSURE TESTING DRAWING

BYPRODUCT NOTES

NOTE 1: SEE EWR-86-489 FOR DETAILS OF THE ISI CLASSIFICATION BASIS.

FOR ISI CLASSIFICATION BOUNDARY DRAWING LEGEND AND SYMBOLS, SEE 12050-CBM-L&S-3
THIS CLASSIFICATION BOUNDARY DRAWING IS TO BE USED FOR THE 3-rd TEN YEAR INSPECTION INTERVAL.

CONTINUATION DRAWING NUMBERS REFER TO FM OR FB DRAWINGS. THE CORRESPONDING CLASSIFICATION BOUNDARY DRAWINGS (CBM OR CBB) CAN BE DETERMINED BY SUBSTITUTING CBM OR CBB FOR FM OR FB.

CAUTION:
THE BACKGROUND PORTION OF THIS BYPRODUCT DRAWING IS FOR REFERENCE ONLY. THE BACKGROUND INFORMATION IS NOT CONTROLLED AND MAY NOT REFLECT THE ACTUAL PLANT CONFIGURATION. REFER TO THE LATEST FLOW/VALVE OPERATING NUMBERS DIAGRAM FOR CONTROLLED BACKGROUND INFORMATION.

REVISION DESCRIPTION

THIS BYPRODUCT DWG ISSUED PER THE FOLLOWING FLOW/VON DIAGRAM	
FLOW/VON DRAWING NO: 12050-FM -096A	REV. 36
	SH 2 OF 3

Dominion

NUCLEAR ENGINEERING
RICHMOND, VIRGINIA

ISI CLASSIFICATION BOUNDARY DWG INTERVAL-3
SAFETY INJECTION SYSTEM
NORTH ANNA POWER STATION UNIT 2
VIRGINIA POWER

REVISION DESCRIPTION	CAD NO: C:\usr\dgn\N2096A2MCB3kz1	
REVISED PER DCR 2002-2242A, AND REV 35 & 36 OF FM DWG. THIS DWG. SUPERSEDES REV 0	DRAWING NO: 12050-CBM-096A-3	REV 1
DSGN AEG	SCALE: NONE	UNLESS OTHERWISE NOTED SH 2 OF 3

PC-MF3

ALON001
21-MAY-2003 07:23
C:\usr\dgn\N2096A2MCB3kz1

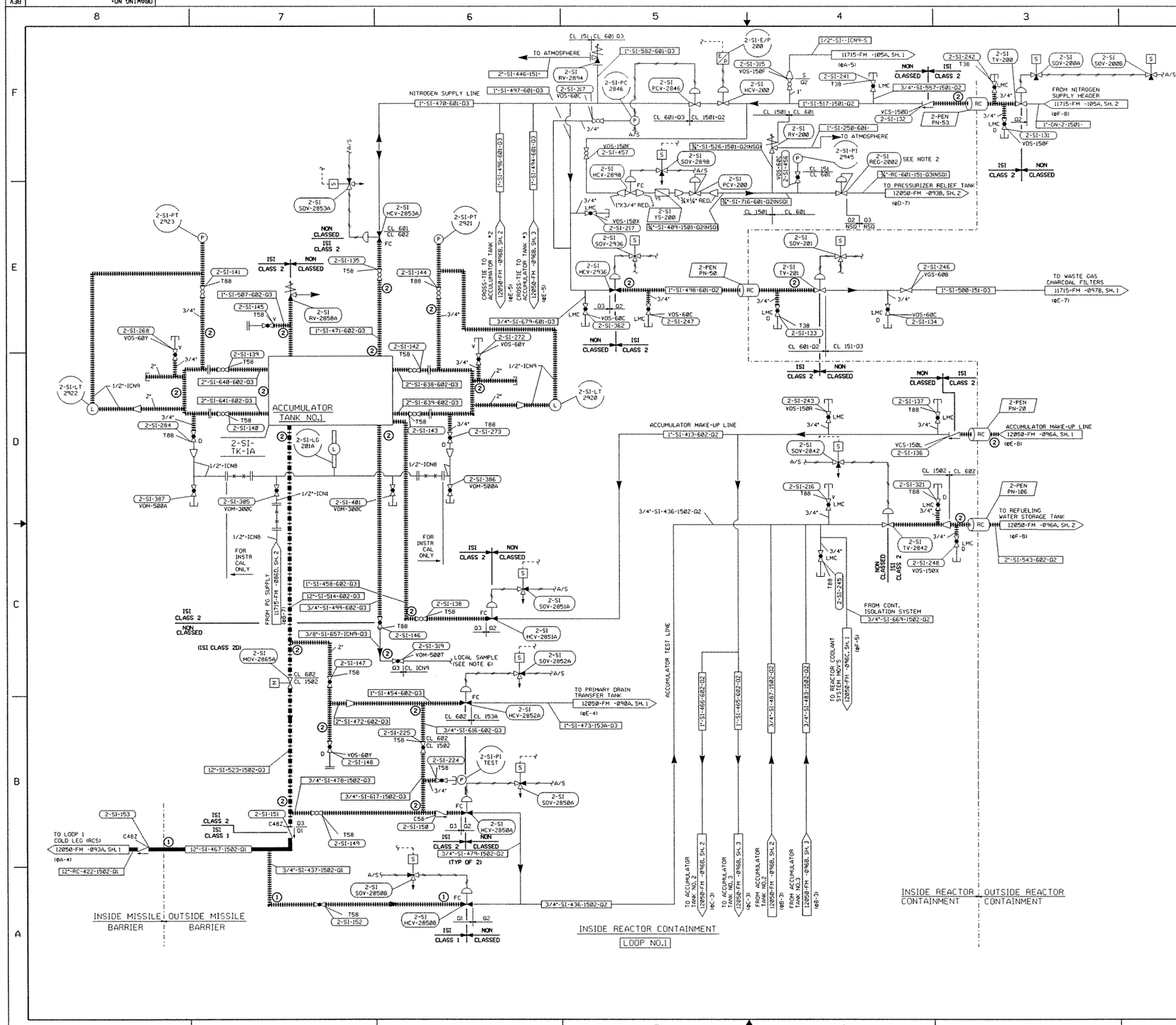

NOTES

1. FOR NOTES, SEE SHEET 1 OF 12050-FM-096A.
2. PRESSURE REGULATOR WITH SCHEDULE 40 STAINLESS STEEL PIPE NIPPLES.
3. PRESSURE CONTROL VALVE WITH ¼" SS PIPE NIPPLES AND ¾" TO ½" SS REDUCING COUPLINGS SUPPLIED BY VENDOR.
4. ARMSTRONG STRAINER CISW W/CHROME MOLY BODY & 304 SS SCREEN.
5. THE PIPING CLASS BETWEEN FCV-200 & REG-2002 CAN BE RELAXED DUE TO RV-200. DCP 95-159 MADE CHANGE AS SHOWN.

REFERENCE DRAWINGS

NUMBER	TITLE
01. FOR ADDITIONAL REFERENCE DRAWINGS, SEE SHEET 1 OF 12050-FM-096A.	
02. 12050-FM-090A	FLOW/VON DIAGRAM,VENT & DRAIN SYSTEM
03. 12050-FM-093A	FLOW/VON DIAGRAM,REACTOR COOLANT SYSTEM
04. 12050-FM-093B	FLOW/VON DIAGRAM,REACTOR COOLANT SYSTEM
05. 12050-FM-096A	FLOW/VON DIAGRAM,SAFETY INJECTION SYSTEM
06. 12050-FM-096C	FLOW/VON DIAGRAM,SAFETY INJECTION SYSTEM
07. 11715-FM-097B	FLOW/VON DIAGRAM,GASEOUS WASTE DISPOSAL SYSTEM
08. 11715-FM-105A	FLOW/VON DIAGRAM,PRIMARY PLANT GAS SUPPLY SYSTEM

BYPRODUCT DRAWINGS

1. 12050-CBM-096B, SH.1	ISI CLASSIFICATION BOUNDARY DRAWING
2. DELETED	
3. 12050-SPM-096B, SH.1	ISI SYSTEM PRESSURE TESTING DRAWING

BYPRODUCT NOTES

NOTE 1: SEE EWR-86-489 FOR DETAILS OF THE ISI CLASSIFICATION BASIS.

FOR ISI CLASSIFICATION BOUNDARY DRAWING LEGEND AND SYMBOLS, SEE 12050-CBM-L&S-3
THIS CLASSIFICATION BOUNDARY DRAWING IS TO BE USED FOR THE 3rd TEN YEAR INSPECTION INTERVAL.

CONTINUATION DRAWING NUMBERS REFER TO FM OR FB DRAWINGS. THE CORRESPONDING CLASSIFICATION BOUNDARY DRAWINGS (CBM OR CBB) CAN BE DETERMINED BY SUBSTITUTING CBM OR CBB FOR FM OR FB.

CAUTION:
THE BACKGROUND PORTION OF THIS BYPRODUCT DRAWING IS FOR REFERENCE ONLY. THE BACKGROUND INFORMATION IS NOT CONTROLLED AND MAY NOT REFLECT THE ACTUAL PLANT CONFIGURATION. REFER TO THE LATEST FLOW/VALVE OPERATING NUMBERS DIAGRAM FOR CONTROLLED BACKGROUND INFORMATION.

REVISION DESCRIPTION

THIS BYPRODUCT DWG ISSUED PER THE FOLLOWING FLOW/VON DIAGRAM	
FLOW/VON DRAWING NO: 12050-FM -096B	REV. 30
	SH 1 OF 4

VIRGINIA POWER
NORTH CAROLINA POWER
NUCLEAR ENGINEERING SERVICES
RICHMOND, VIRGINIA

ISI CLASSIFICATION BOUNDARY DWG INTERVAL-3
SAFETY INJECTION SYSTEM
NORTH ANNA POWER STATION UNIT 2
VIRGINIA POWER

REVISION DESCRIPTION	CAD NO: C:\usr\dgn\N2096B1MCB31p1	
ORIGINAL ISSUE PER DCR 2001-685 AND REV 30 OF FM	DRAWING NO: 12050-CBM-096B-3	REV 0
DSGN EGC	SCALE: NONE UNLESS OTHERWISE NOTED	SH 1 OF 4

PC=MF3

CLOUGHE
23-MAY-2001 16:06
C:\usr\dgn\N2096B1MCB31p1

PRIOR TO USING FOR DESIGN WORK CHECK DMIS FOR WORK PENDING

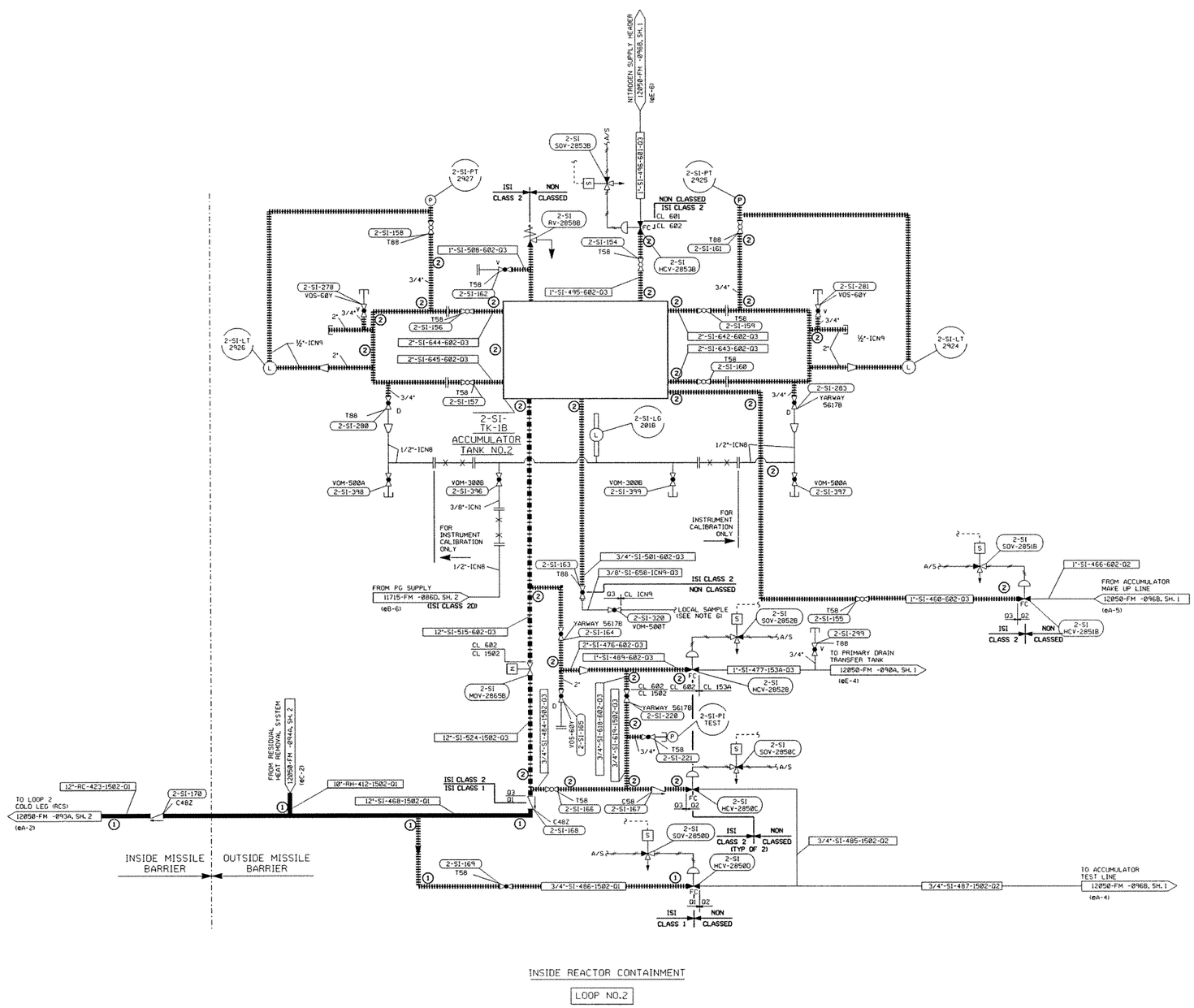

NOTES

1. FOR NOTES, SEE SHEET 1 OF 12050-FM-096A.

REFERENCE DRAWINGS

NUMBER	TITLE
01. FOR ADDITIONAL REFERENCE DRAWINGS, SEE SHEET 1 OF THIS DRAWING.	
02. 12050-FM-090A	FLOW/VON DIAGRAM,VENT & DRAIN SYSTEM
03. 12050-FM-093A	FLOW/VON DIAGRAM,REACTOR COOLANT SYSTEM
04. 12050-FM-094A	FLOW/VON DIAGRAM,RESIDUAL HEAT REMOVAL SYSTEM
05. 12050-FM-096A	FLOW/VON DIAGRAM,SAFETY INJECTION SYSTEM

BYPRODUCT DRAWINGS

1. 12050-CBM-096B, SH.2 — ISI CLASSIFICATION BOUNDARY DRAWING
2. DELETED
3. 12050-SPM-096B, SH.2 — ISI SYSTEM PRESSURE TESTING DRAWING

BYPRODUCT NOTES

NOTE 1: SEE EWR-86-489 FOR DETAILS OF THE ISI CLASSIFICATION BASIS.

FOR ISI CLASSIFICATION BOUNDARY DRAWING LEGEND AND SYMBOLS, SEE 12050-CBM-L&S-3
THIS CLASSIFICATION BOUNDARY DRAWING IS TO BE USED FOR THE 3rd TEN YEAR INSPECTION INTERVAL.

CONTINUATION DRAWING NUMBERS REFER TO FM OR FB DRAWINGS. THE CORRESPONDING CLASSIFICATION BOUNDARY DRAWINGS (CBM OR CBD) CAN BE DETERMINED BY SUBSTITUTING CBM OR CBD FOR FM OR FB.

CAUTION:
THE BACKGROUND PORTION OF THIS BYPRODUCT DRAWING IS FOR REFERENCE ONLY. THE BACKGROUND INFORMATION IS NOT CONTROLLED AND MAY NOT REFLECT THE ACTUAL PLANT CONFIGURATION. REFER TO THE LATEST FLOW/VALVE OPERATING NUMBERS DIAGRAM FOR CONTROLLED BACKGROUND INFORMATION.

REVISION DESCRIPTION

THIS BYPRODUCT DWG ISSUED PER THE FOLLOWING FLOW/VON DIAGRAM

FLOW/VON DRAWING NO:	REV.
12050-FM -096B	24

SH 2 OF 4

VIRGINIA POWER
NORTH CAROLINA POWER

NUCLEAR ENGINEERING SERVICES
RICHMOND, VIRGINIA

ISI CLASSIFICATION BOUNDARY DWG INTERVAL-3
SAFETY INJECTION SYSTEM
NORTH ANNA POWER STATION UNIT 2
VIRGINIA POWER

REVISION DESCRIPTION	CAD NO: C:\usr\dgn\N209682MCB3.jf1	
ORIGINAL ISSUE PER DCR 2001-686 AND REV 24 OF FM	DRAWING NO: 12050-CBM-096B-3	REV 0

DSGN EGC | SCALE: NONE | UNLESS OTHERWISE NOTED | SH 2 OF 4

PC-MF3

PRIOR TO USING FOR DESIGN WORK CHECK DMIS FOR WORK PENDING

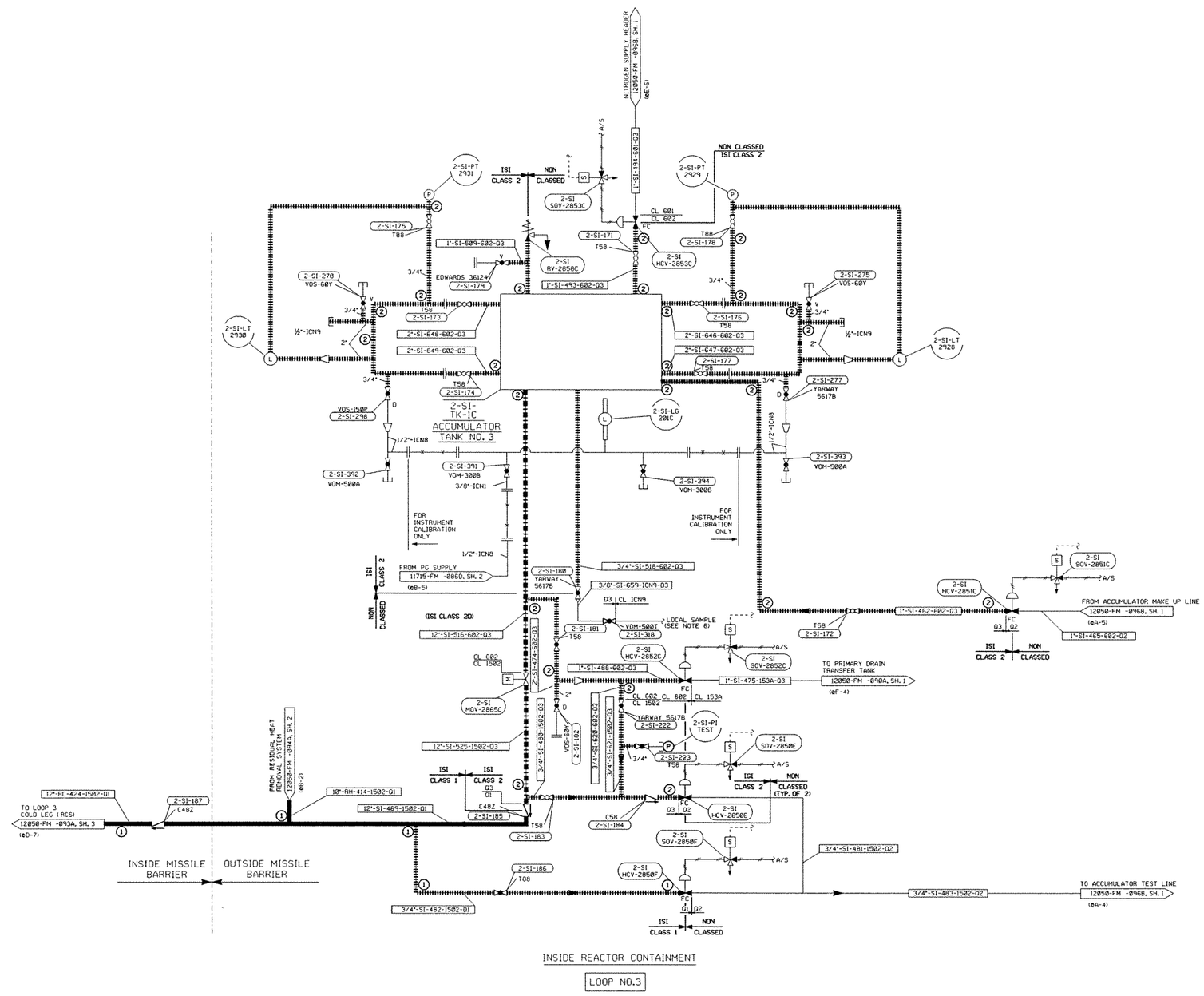

NOTES

1. FOR NOTES, SEE SHEET 1 OF 12050-FM-096A.

REFERENCE DRAWINGS

NUMBER	TITLE
01. FOR ADDITIONAL REFERENCE DRAWINGS, SEE SHEET 1 OF THIS DRAWING.	
02. 12050-FM-090A	FLOW/VON DIAGRAM,VENT & DRAIN SYSTEM
03. 12050-FM-093A	FLOW/VON DIAGRAM,REACTOR COOLANT SYSTEM
04. 12050-FM-094A	FLOW/VON DIAGRAM,RESIDUAL HEAT REMOVAL SYSTEM
05. 12050-FM-096A	FLOW/VON DIAGRAM,SAFETY INJECTION SYSTEM

BYPRODUCT DRAWINGS

1. 12050-CBM-096B, SH.3	ISI CLASSIFICATION BOUNDARY DRAWING
2. DELETED	
3. 12050-SPM-096B, SH.3	ISI SYSTEM PRESSURE TESTING DRAWING

BYPRODUCT NOTES

NOTE 1: SEE EWR-86-489 FOR DETAILS OF THE ISI CLASSIFICATION BASIS.

FOR ISI CLASSIFICATION BOUNDARY DRAWING LEGEND AND SYMBOLS, SEE 12050-CBM-L&S-3
THIS CLASSIFICATION BOUNDARY DRAWING IS TO BE USED FOR THE 3rd TEN YEAR INSPECTION INTERVAL.

CONTINUATION DRAWING NUMBERS REFER TO FM OR FB DRAWINGS, THE CORRESPONDING CLASSIFICATION BOUNDARY DRAWINGS (CBM OR CBB) CAN BE DETERMINED BY SUBSTITUTING CBM OR CBB FOR FM OR FB.

CAUTION:
THE BACKGROUND PORTION OF THIS BYPRODUCT DRAWING IS FOR REFERENCE ONLY. THE BACKGROUND INFORMATION IS NOT CONTROLLED AND MAY NOT REFLECT THE ACTUAL PLANT CONFIGURATION. REFER TO THE LATEST FLOW/VALVE OPERATING NUMBERS DIAGRAM FOR CONTROLLED BACKGROUND INFORMATION.

REVISION DESCRIPTION

THIS BYPRODUCT DWG ISSUED PER THE FOLLOWING FLOW/VON DIAGRAM

FLOW/VON DRAWING NO:	REV.
12050-FM -096B	27

SH 3 OF 4

VIRGINIA POWER
NORTH CAROLINA POWER

NUCLEAR ENGINEERING SERVICES
RICHMOND, VIRGINIA

ISI CLASSIFICATION BOUNDARY DWG INTERVAL-3
SAFETY INJECTION SYSTEM
NORTH ANNA POWER STATION UNIT 2
VIRGINIA POWER

REVISION DESCRIPTION
ORIGINAL ISSUE PER DCR 2001-687 AND REV 27 OF FM

CAD NO: C:\usr\dgn\N20968BMCB3y=1

DRAWING NO: 12050-CBM-096B-3 REV 0

DSGN EGC SCALE: NONE UNLESS OTHERWISE NOTED SH 3 OF 4

PC-MF3

CLOUGHE
23-MAY-2001 09:03
C:\usr\dgn\N20968BMCB3y=1

PRIOR TO USING FOR DESIGN WORK CHECK DMIS FOR WORK PENDING

DRAWING NO: 12050-CBM-096B-3 REV 1

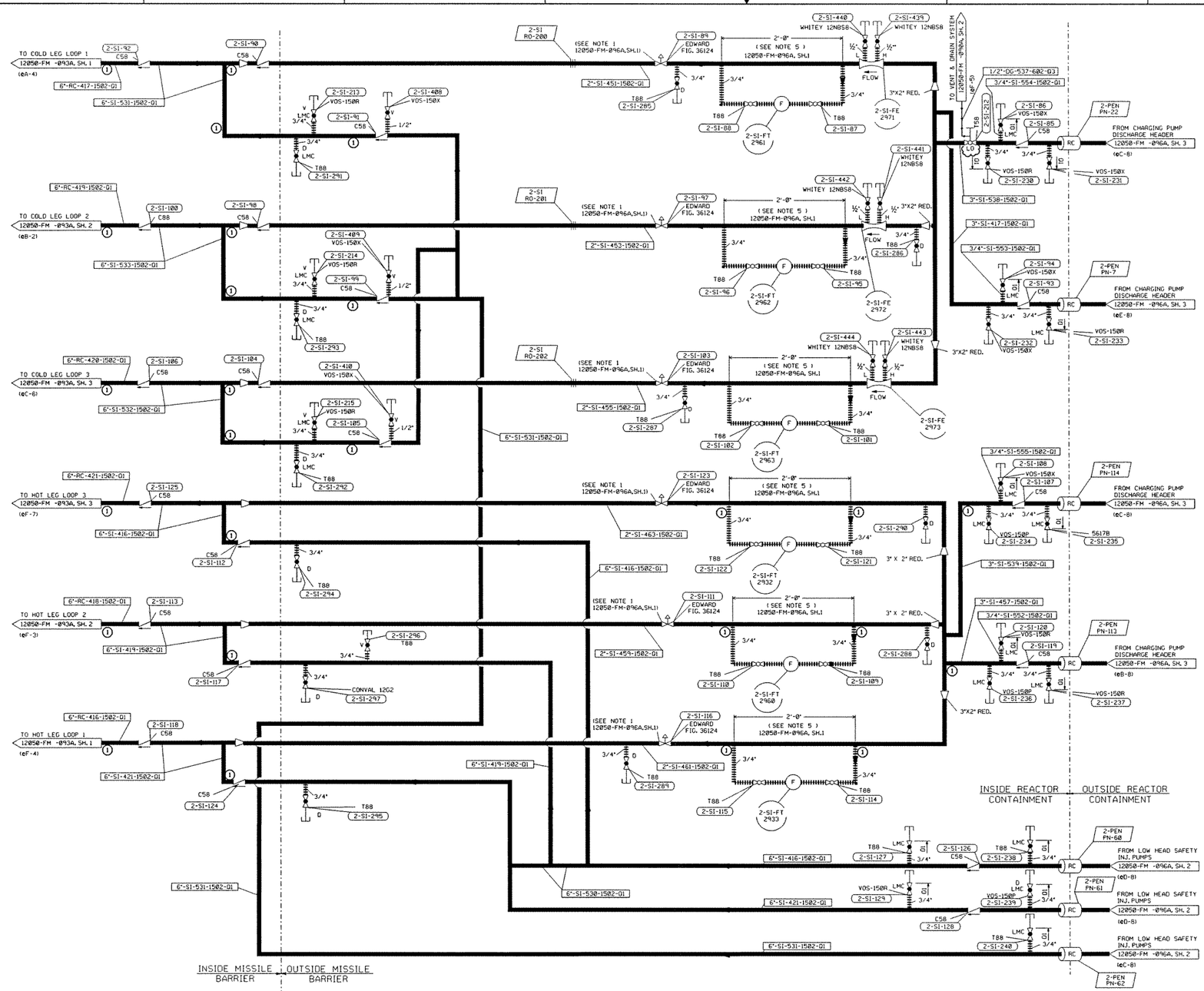

NOTES

1. FOR NOTES, SEE SHEET 1 OF 12050-FM-096A.

REFERENCE DRAWINGS

NUMBER	TITLE
01. FOR ADDITIONAL REFERENCE DRAWINGS, SEE SHEET 1 OF THIS DRAWING.	
02. 12050-FM-090A	FLOW/VON DIAGRAM,VENT & DRAIN SYSTEM
03. 12050-FM-093A	FLOW/VON DIAGRAM,REACTOR COOLANT SYSTEM
04. 12050-FM-096A	FLOW/VON DIAGRAM,SAFETY INJECTION SYSTEM

BYPRODUCT DRAWINGS

1. 12050-CBM-096B, SH.4 — ISI CLASSIFICATION BOUNDARY DRAWING
2. DELETED
3. 12050-SPM-096B, SH.4 — ISI SYSTEM PRESSURE TESTING DRAWING

BYPRODUCT NOTES

NOTE 1: SEE EWR-86-489 FOR DETAILS OF THE ISI CLASSIFICATION BASIS.

FOR ISI CLASSIFICATION BOUNDARY DRAWING LEGEND AND SYMBOLS, SEE 12050-CBM-L&S-3
THIS CLASSIFICATION BOUNDARY DRAWING IS TO BE USED FOR THE 3rd TEN YEAR INSPECTION INTERVAL.

CONTINUATION DRAWING NUMBERS REFER TO FM OR FB DRAWINGS. THE CORRESPONDING CLASSIFICATION BOUNDARY DRAWINGS (CBM OR CBB) CAN BE DETERMINED BY SUBSTITUTING CBM OR CBB FOR FM OR FB.

CAUTION:
THE BACKGROUND PORTION OF THIS BYPRODUCT DRAWING IS FOR REFERENCE ONLY. THE BACKGROUND INFORMATION IS NOT CONTROLLED AND MAY NOT REFLECT THE ACTUAL PLANT CONFIGURATION. REFER TO THE LATEST FLOW/VALVE OPERATING NUMBERS DIAGRAM FOR CONTROLLED BACKGROUND INFORMATION.

REVISION DESCRIPTION

THIS BYPRODUCT DWG ISSUED PER THE FOLLOWING FLOW/VON DIAGRAM	
FLOW/VON DRAWING NO: 12050-FM -096B	REV. 30
	SH 4 OF 4

Dominion

NUCLEAR ENGINEERING
RICHMOND, VIRGINIA

ISI CLASSIFICATION BOUNDARY DWG INTERVAL-3
SAFETY INJECTION SYSTEM
NORTH ANNA POWER STATION UNIT 2
VIRGINIA POWER

REVISION DESCRIPTION: REVISED PER DCR 2002-0993A & PER REV 30 OF FM. THIS DWG SUPERSEDES THE REV 0 ORIGINAL.

CAD NO: C:\war\dgn\N209684MCB3m-1

DRAWING NO:	REV
12050-CBM-096B-3	1

DSGN AEG | SCALE: NONE | UNLESS OTHERWISE NOTED | SH 4 OF 4

PC-MF3

ALON001
19-AUG-2002 07:30
C:\war\dgn\N209684MCB3m-1