NATIONAL ENRICHMENT FACILITY

10 CFR 30.6
10 CFR 40.5
10 CFR 70.5

June 29, 2004

NEF#04-026

ATTN: Document Control Desk
Director
Office of Nuclear Material Safety and Safeguards
U.S. Nuclear Regulatory Commission
Washington, DC 20555-0001

Louisiana Energy Services, L. P.
National Enrichment Facility
NRC Docket No. 70-3103

Subject: Ground Water Discharge Permit and Air Quality Notice of Intent Applications

References:

1. Letter NEF#03-003 dated December 12, 2003, from E. J. Ferland (Louisiana Energy Services, L. P.) to Directors, Office of Nuclear Material Safety and Safeguards and the Division of Facilities and Security (NRC) regarding "Applications for a Material License Under 10 CFR 70, Domestic licensing of special nuclear material, 10 CFR 40, Domestic licensing of source material, and 10 CFR 30, Rules of general applicability to domestic licensing of byproduct material, and for a Facility Clearance Under 10 CFR 95, Facility security clearance and safeguarding of national security information and restricted data"

2. Letter NEF#04-002 dated February 27, 2004, from R. M. Krich (Louisiana Energy Services, L. P.) to Director, Office of Nuclear Material Safety and Safeguards (NRC) regarding "Revision 1 to Applications for a Material License Under 10 CFR 70, "Domestic licensing of special nuclear material," 10 CFR 40, "Domestic licensing of source material," and 10 CFR 30, "Rules of general applicability to domestic licensing of byproduct material"

By letter dated December 12, 2003 (Reference 1), E. J. Ferland of Louisiana Energy Services (LES), L. P., submitted to the NRC applications for the licenses necessary to authorize construction and operation of a gas centrifuge uranium enrichment facility. Revision 1 to these applications was submitted to the NRC by letter dated February 27, 2004 (Reference 2). The National Enrichment Facility (NEF) Environmental Report was included in these applications.

During an April 26, 2004, telephone discussion between representatives of the NRC and LES regarding the NEF Environmental Report, the NRC requested that copies of the LES Ground Water Discharge Permit and Air Quality Notice of Intent applications to the State of New Mexico be provided. This letter provides the requested applications and subsequent responses received from the State of New Mexico Environment Department.

NMSS01

One Sun Plaza 100 Sun Lane NE, Suite 204 Albuquerque, NM 87109 [P] 505 944 0194 [F] 505 944 0198

Attachment 1 to this letter provides a copy of the LES Ground Water Discharge Permit Application dated April 26, 2004.

Attachment 2 to this letter provides a copy of the LES Air Quality Notice of Intent Application dated April 20, 2004.

Attachment 3 to this letter provides a copy of a letter dated May 17, 2004, from J. Schoeppner (New Mexico Environment Department) to Louisiana Energy Services, L. P., regarding the determination by the New Mexico Environment Department that the LES Ground Water Discharge Permit Application is administratively complete. This letter also informed LES of applicant's public notice requirements.

Attachment 4 to this letter provides a copy of a letter dated May 27, 2004, from B. D. Taylor (New Mexico Environment Department) to R. M. Krich (Louisiana Energy Services, L. P.) regarding the determination by the New Mexico Environment Department, based on the submitted LES application, that an air quality permit is not required for the NEF.

If you have any questions or need additional information, please contact me at 630-657-2813.

Respectfully,

Daniel G. Green for

R. M. Krich
Vice President – Licensing, Safety, and Nuclear Engineering

Attachments:

1. LES Ground Water Discharge Permit Application

2. LES Air Quality Notice of Intent Application

3. Letter dated May 17, 2004, from J. Schoeppner (New Mexico Environment Department) to Louisiana Energy Services, L. P., Regarding "Administrative Completeness Determination and Applicant's Public Notice Requirements, DP-1481, National Enrichment Facility"

4. Letter dated May 27, 2004, from B. D. Taylor (New Mexico Environment Department) to R. M. Krich (Louisiana Energy Services, L. P.) Regarding "Notice of Intent No. 3062 - National Enrichment Facility (NEF)"

cc: T.C. Johnson, NRC Project Manager (w/o Attachments)
M.C. Wong, NRC Environmental Project Manager

ATTACHMENT 1

Louisiana Energy Services
Ground Water Discharge Permit Application

State of New Mexico
ENVIRONMENT DEPARTMENT
Ground Water Quality Bureau
Harold Runnels Building
1190 St. Francis Drive, P.O. Box 26110
Santa Fe, New Mexico 87502-6110
Telephone (505) 827-2900
Fax (505) 827-2965
www.nmenv.state.nm.us

BILL RICHARDSON
GOVERNOR

RON CURRY
SECRETARY

DERRITH WATCHMAN-MOORE
DEPUTY SECRETARY

GROUND WATER DISCHARGE PERMIT APPLICATION

Enclosed is a Ground Water Discharge Permit Application Form (Form) and checklist. Section 20.6.2.3104 NMAC of the NM Water Quality Control Commission Regulations (20.6.2 NMAC) requires that any person proposing to discharge effluent or leachate so that it may move directly or indirectly into ground water must have an approved discharge permit, unless a specific exemption is provided for in the Regulations. The enclosed Form is a general guideline for use by applicants to ensure that an application is complete and provides all of the information required by sections 20.6.2.3106, 20.6.2.3107, 20.6.2.3108, and 20.6.2.3109 NMAC.

Mail **three complete copies** of your application with a **$100 filing fee** check made payable to the New Mexico Environment Department (NMED) at the address below:

Maura Hanning, Program Manager
Ground Water Pollution Prevention Section
NM Environment Department
P. O. Box 26110
Santa Fe, NM 87502

Pursuant to Regulation 20.6.2.3108 NMAC, NMED will, within thirty (30) days of deeming the application administratively complete, publish a public notice and allow 30 days for public comment before taking final action on a discharge permit. A public hearing will be held if NMED determines that there is significant public interest. It takes approximately180 days to process a complete application and issue a discharge permit if no public hearing is held.

All applications must be accompanied by a filing fee of $100. **An additional fee will be assessed prior to permit issuance** to cover the estimated cost to the NMED for investigation, and, issuance of the permit. **Permit fees are listed in the Regulation 20.6.2.3114 NMAC.**

If you have any questions about this discharge permit application, call the Ground Water Pollution Prevention Section at 505-827-2900

COMPLETION CHECKLIST

X	All portions of the Ground Water Discharge Permit Application Form have been addressed. (The application will not be considered complete if there are omissions, which will delay publication of the public notice and issuance of the permit.)
X	Submitter has included operational, monitoring, contingency, and closure plans that are appropriate for the proposed treatment and disposal system, and meet the site-specific conditions for the proposed facility.
X	Plans and specifications for the entire effluent or leachate conveyance, collection, treatment, distribution, and disposal system have been included as required by Regulation 20.6.2.1202 NMAC. For septic tank/leachfield systems, designs should be consistent with NMED's guidelines for Plans and Specifications for Discharge Permit Applications Using Septic Tank/Leachfields.
X	The application has been signed and dated by the responsible party, generally the owner or lessee.
X	If your facility site includes an archeological site on the State Register of Cultural Properties or National Register of Historic Places, the State Historic Preservation Office has the authority to require an archeological or historical study prior to NMED taking final action on your discharge permit.
X	Four maps have been included: **1)** area United States Geological Survey (USGS) topographic map that includes the location of the facility and all of the information required in the application item 7.b, **2)** local road map clearly defining the location of the facility and the route to get to the facility, **3)** detailed site map that includes all discharge locations (lagoons, leachfields, land application areas, outfalls...), all water supply and monitoring wells, all water courses on the property and all buildings and **4)** United States Department of Agriculture (USDA) soils map.
X	Three copies of all required information have been enclosed.
X	A filing fee check in the amount of $100, has been enclosed, made payable to the NM Environment Department at the address on page 1.
X	The SUMMARY OF APPLICANT'S PUBLIC NOTICE REQUIREMENTS has been reviewed and the option for Public Notice Has been selected on the application page 3.

ADMINISTRATIVE COMPLETENESS

To be deemed administratively complete for publication of a public notice, the following information must be provided. [20.6.2.3106, 20.6.2.3108 NMAC]

Review the SUMMARY OF APPLICANT'S PUBLIC NOTICE REQUIREMENTS (attached) to select an option below.

☒ Public Notice Option 1 ☒ Public Notice Option 2 ☒ Public Notice Option 3

1. **Name of the proposed discharger and facility** [20.6.2.3106, 20.6.2.3108.C.1 NMAC]:

National Enrichment Facility (NEF)

Type of facility or operation (dairy, municipal wwtp, mining, school, etc.): Uranium Enrichment Plant

	Name	Address*	City	State	Zip	Telephone & Fax
Facility*	National Enrichment Facility	To be determined	Eunice	NM	88231	To be determined
Owner	Louisiana Energy Services, LP	100 Sun Lane NE, Suite 204	Albuquerque	NM	87109	505-944-0194 Ph. 505-944-0198 Fax
Responsible Party	R. M. Krich	2600 Virginia Ave. NW Suite 610	Washington	DC	20037	202-222-0391 Ph. 202-337-2421 Fax
Facility Representative	R. M. Krich	2600 Virginia Ave. NW Suite 610	Washington	DC	20037	202-222-0391 Ph. 202-337-2421 Fax
Consultant	AREVA GL Environmental	400 Donald Lynch Blvd. 4200 Meadowlark Lane, Suite 1A	Marlborough Rio Rancho	MA NM	01752 87124	978-568-2728 Ph. 978-568-3731 Fax 505-994-0099 Ph. 505-994-0093 Fax
Other (specify) Current Land Owner	New Mexico State Land Office	310 Old Santa Fe Trail, P.O. Box 1148	Santa Fe	NM	87504-1148	505-827-5760 Ph. 505-827-5766 Fax

*For the facility address, enter physical address- not mailing address.

2. Locations of the Discharges [20.6.2.3106.C.2 and 20.6.3108.C.2 NMAC]:

List the locations of the discharges covered by this permit. Add rows as necessary to include all discharge locations. Sections should be described to the nearest ¼ of a ¼ of a ¼ section (please see attachment).

Discharge Location (lagoons, leachfields, land application areas, outfalls, etc.)	County	Township	Range	Section	Latitude	Longitude
Site Storm Water Detention Basin (SSDB)	Lea	T21S	R38E	SE, SE, SW 32	32°25' 52" N	103°04' 35" W
Uranium Byproduct Cylinder (UBC) Storage Pad Storm Water Retention Basin (USPSRB)	Lea	T21S	R38E	SW, NE, NE 32	32°26' 07" N	103°05' 02" W
Treated Effluent Evaporative Basin (TEEB)	Lea	T21S	R38E	SE, NW, NW 32	32°26' 02" N	103°04' 55" W
Septic Tank-Leachfield 1 (ST/L 1)	Lea	T21S	R38E	SE, NE, SW 32	32°25' 57" N	103°04' 36" W
Septic Tank-Leachfield 2 (ST/L 2)	Lea	T21S	R38E	NW, SE, SW 32	32°26' 11" N	103°05' 06" W
Septic Tank-Leachfield 3 (ST/L 3)	Lea	T21S	R38E	NE, SW, SW 32	32°26' 10" N	103°04' 49" W
Septic Tank-Leachfield 4 (ST/L 4)	Lea	T21S	R38E	SE, NW, SE 32	32°25' 59" N	103°04' 46" W
Septic Tank-Leachfield 5 (ST/L 5)	Lea	T21S	R38E	SE, NE, NW 32	32°26' 02" N	103°04' 39" W
Septic Tank-Leachfield 6 (ST/L 6)	Lea	T21S	R38E	SE, SE, NE 32	32°25' 52" N	103°04' 29" W

Note: Refer to NEF Detailed Site Map (Attachment A) for basin and discharge locations

3. Brief Description of Discharge [20.6.2.3108.C.3 NMAC]:

Briefly describe the activities which produce the discharge(s) including the treatment and disposal methods. Attach additional pages as necessary.

The **Site Storm Water Detention Basin** at the south side of the site will collect runoff from various developed parts of the site including roads, parking areas and building roofs. It is unlined and will have an outlet structure to control discharges above the design level. The normal discharge will be through evaporation/infiltration into the ground. The basin is designed to contain runoff for a volume equal to that for the 24-hour, 100-year return frequency storm, a 15.2 cm (6.0 in) rainfall. The basin will have approximately 23,350 m^3 (100 acre-ft) of storage capacity. Area served includes about 39 ha (96 acres) with the majority of that area being the developed portion of the 220 ha (543 acres)

NEF site. Effluent is not treated prior to release. If required, all storm water discharges will be regulated by a National Pollutant Discharge Elimination System (NPDES) Storm Water Permit, including a General Permit for construction and a Multi Sector General Stormwater Permit for facility operations.

The **Uranium Byproduct Cylinder (UBC) Storage Pad Storm Water Retention Basin** is utilized for the collection and containment of water discharges from three sources: (1) cooling tower blowdown discharges, (2) storm water runoff from the UBC Storage Pad and (3) heating boiler blowdown. The ultimate disposal of basin water will be through evaporation of water and impoundment of the residual dry solids* after evaporation. It is designed to contain runoff for a volume equal to twice that for the 24-hour, 100-year return frequency storm, a 15.2-cm (6.0-in) rainfall plus an allowance for cooling tower and heating boiler blowdown water. The UBC Storage Pad Storm Water Retention Basin is designed to contain a volume of approximately 77,700 m^3 (63 acre-ft). Area served by the basin includes 9.2 ha (22.8 acres), the total area of the UBC Storage Pad. This basin is designed with a membrane lining to minimize any infiltration into the ground. To provide adequate chemical resistance to the various liquids, the liner material may consist of High Density Polyethylene (HDPE) or Ethylene Interpolymer Alloy (Coolgard ® XR-5® or Ultra Tech®). Liner thickness will be specified during final design. Effluent is not treated prior to release to the basin. The basin liner will comply with the NM Environment Department Ground Water pollution Prevention Sections, Guidelines for Liner Material and Site Preparation for Synthetically Lined Lagoons, December 11, 1995. The basin does not have an outlet.

Cooling Tower blowdown composition: pH will be in the range of 6.5 to 9.0, dissolved constituents with the exception of bicarbonate and sulfate will be those present in the potable water supply at a concentration factor of approximately 3 times. Sulfate will be higher and bicarbonate will be lower than three times the potable water concentrations due to the addition of sulfuric acid to the cooling water for pH adjustment to prevent carbonate scaling. Oxidizing biocide, corrosion inhibitor and dispersant chemical constituents will also be present as dissolved components of cooling tower blowdown.

Typical blowdown concentrations will be as follows:

Phosphate = 4-12 ppm
Epoxy carboxylate = 4-8 ppm
Hydroxyl sulfurate polymer = 5-10 ppm
Copper inhibitor HRA = 2-4 ppm

Typical chemicals used in cooling tower water treatment are as follows:

96% Sulfuric Acid
Continuum AEC3109
Liquid Bromine

Heating Boiler blowdown contains potential concentrations of sulfites (50 ppm), neutralizing amine (10 ppm), phosphate (30 ppm), and polymer (40 ppm).

Discharge of routine plant liquid effluents will be to the **Treated Effluent Evaporative Basin** on the site. The Treated Effluent Evaporative Basin is utilized for the collection and containment of waste water discharge from the Liquid Effluent Collection and Treatment System. The ultimate disposal of

waste water will be through evaporation of water and impoundment of the residual dry solids* byproduct of evaporation. Total annual discharge to that basin will be approximately 2,535 m^3 per year (669,844 gal/yr). Evaporation will provide the only means of liquid disposal from this basin. The Treated Effluent Evaporative Basin will include a double membrane liner and a leak detection system. To provide adequate chemical resistance to the various liquids, the liner material may consist of High Density Polyethylene (HDPE) or Ethylene Interpolymer Alloy (Coolgard ® XR-5® or Ultra Tech®). Liner thickness will be specified during final design. Of the liquid effluent discharges to the basin, only uncontaminated liquid wastes are released to the Treated Effluent Evaporative Basin for evaporation without treatment. Contaminated liquid effluent is neutralized and treated for removal of uranium, as required, prior to discharge to the basin. Effluents unsuitable for the evaporative disposal will not be discharged to the basin. They will be removed off-site by a licensed contractor in accordance with regulatory requirements. The basin will have two synthetic liners with leak detection that will comply with the NM Environment Department Ground Water Pollution Prevention Sections, Guidelines for Liner Material and Site Preparation for Synthetically Lined Lagoons, December 11, 1995. The basin does not have an outlet.

The site will be served by six **standard septic systems with leachfields** to dispose of sanitary wastes at the site.

* Note: Dry Residual Solids
For the three basins: Site Stormwater Detention Basin (SSDB), UBC Storage Pad Stormwater Retention Basin (USPSRB) and the Treated Effluent Evaporative Basin (TEEB), dry residual solids are expected to consist principally of:

- Silt from rainwater runoff (SSDB and USPSRB), and
- Silt/sand from natural wind-blown materials (SSDB, USPSRB, and TEEB)

Minor constituents include:

- Concrete dust from the UBC Storage Pad (USPSRB)
- Trace amounts of residual non-volatile fractions of boiler blowdown chemicals: sulfites, neutralizing amine, phosphate, and polymer (USPSRB)
- Trace amounts of residual non-volatile fractions of Cooling Tower blowdown chemicals: sulfate (concentrated from potable water), oxidizing biocide, corrosion inhibitor, and dispersant chemical (USPSRB)
- Small residual amounts of uranium (TEEB)

4. Discharge Characteristics [20.6.2.3106.C.1 and 20.6.2.3108.C.4 NMAC]:

4.a. Quantity:

Peak design discharge rate* in gallons per day (gpd) (design capacity of the treatment and disposal system):	SSDB: 15.6 million gpd USPSRB: 3.73 million gpd TEEB: 5,350 gpd ST/L 1: 40 gpd ST/L 2: 40 gpd ST/L 3: 2,275 gpd ST/L 4: 4,980 gpd ST/L 5: 3,020 gpd ST/L 6: 250 gpd
Average discharge rate on annual basis in gpd (actual flow):	SSDB: 99,850 gpd USPSRB: 37,750 gpd TEEB: 1,840 gpd (treated effluent only) ST/L 1: 20 gpd ST/L 2: 20 gpd ST/L 3: 1,140 gpd ST/L 4: 2,490 gpd ST/L 5: 1,510 gpd ST/L 6: 125 gpd
Methods used to meter or calculate discharge volume:	SSDB: Peak and average discharge rates were calculated using peak precipitation event and average annual rainfall, respectively, times the area serviced assuming no infiltration or evaporation. USPSRB: Peak and average discharge rates were calculated using peak precipitation event and average annual rainfall, respectively, times the area serviced assuming no infiltration or evaporation. This amount was increased by the volume of blowdown from the cooling tower (13,840 gpd) and heating boiler (100 gpd). TEEB: Discharges are based on process flow calculations. The liquid effluent will be discharged in batch releases. All discharge volumes along with time of release will be maintained in log books based on tank volumes and release times for tank contents. ST/L: Design flow, based on the number of employees served, is derived from 20.7.3 NMAC; Septic tank specifications based on manufacturer's information from Richard Septic Systems, Inc. Peak flows based on design for 422 persons. Average flows based on actual employee count of 210. Additional details on the calculation of discharge volumes summarized above are provided in Attachment B.

*Peak design discharge rate is the maximum volume of wastewater the system was designed to treat on a daily basis. This is generally based on the capacity of the different components of the system (size of lagoons, volume of tanks, etc.)

4.b. Quality: Add rows as necessary to include all contaminants and toxic pollutants.

Contaminant(s) or Toxic Pollutant(s) generally associated with facility type (contaminants of concern are listed in 20.6.2.7. and 20.6.2.3103 NMAC)	**Influent Concentration (mg/L)**	**Effluent Concentration (mg/L)**
SSDB:		
Total Dissolved Solids (TDS)	Note 1	Note 2
USPSRB:		
Total Dissolved Solids (TDS)	Note 3	Not Applicable
TEEB:		
Total Dissolved Solids (TDS)	Note 4	Not Applicable
Uranium	0.225	Not Applicable
ST/L:		
Total Dissolved Solids (TDS)	Note 5	Not Applicable

Notes:

1. Concentrations will be measured as part of sampling program. LES will provide this information to NMGWQB after initial sampling. They will be typical of industrial storm water runoff prior to settling basin.
2. Concentrations will be measured as part of sampling program. LES will provide this information to NMGWQB after initial sampling. They will be typical of industrial storm water runoff after settling basin.
3. Concentrations will be measured as part of sampling program. LES will provide this information to NMGWQB after initial sampling. For storm water component, they will be typical of industrial storm water runoff prior to settling basin. Blowdown TDS will range from 3 to 5 times the potable water supply obtained from the City of Hobbs.
4. Concentrations will be measured as part of sampling program. LES will provide this information to NMGWQB after initial sampling.
5. Concentrations will be typical of sanitary wastes.

4.c. Flow Characteristics:

Number of days per week discharge occurs:	SSDB: 7 days (Note 1) USPSRB: 7 days (Note 2) TEEB: 7 days (Note 3) ST/L: 7 days
Number of months per year discharge occurs (specify months):	12
Is flow continuous or intermittent:	SSDB: Intermittent USPSRB: Intermittent for storm water and for blowdown TEEB: Intermittent (periodic batch releases) ST/L: Continuous

Notes:

1. Flow is associated with precipitation runoff and is intermittent, but could occur on any day of the week or month of the year.
2. Flow is associated with precipitation runoff and blowdown (cooling tower and heating boiler). Flow associated with precipitation runoff is intermittent, but could occur on any day of the week or month of the year. Flow associated with blowdown is in batch releases and could occur on any day of the week or month of the year.
3. Flow is associated with periodic batch releases from Effluent Treatment System and could occur on any day of the week or month of the year.

5. Ground Water Conditions [20.6.2.3106.C.3 and 20.6.2.3108.C.5 NMAC]:

Sources for this information may be the New Mexico State Engineers Office, NMED, GWPPS web site (www.nmenv.state.nm.us), and USGS reports. If you do not have a TDS value, take a sample from the nearest well to the discharge location and submit the results from the analysis.

Depth to ground water below the discharge site:	Water-bearing unit: 214 to 222 feet bgl
Flow direction of ground water below the site:	South-southeast
Flow gradient of ground water below the site:	0.011 ft/ft
Reference* or source for depth, direction and gradient:	Hydrologic Investigation, Section 32; Township 21 Range 38, Eunice, NM, Cook-Joyce, Inc, Austin TX, 19 Nov, 2003.

* If determined from well logs, please provide photocopies of well logs with application. If depth is derived from a report include copies of appropriate pages and complete reference to report including author, title, and publication date.

Summary of Ground Water Conditions Under the Site

Ground water in the NEF site vicinity occurs sporadically, perched in the sand and gravel alluvium or localized pockets or in surface excavations north of the site, and to the east as detected in some monitoring wells on the adjacent property. This shallow ground water was not detected in 9 site borings or 3 monitoring wells on the site itself.

Nine borings were installed on the NEF site during the fall of 2003. The borings ranged in depth from 35 feet to 60 feet. The borings were gauged for a minimum of 24 hours and ground water was not identified in any of the nine borings.

Upon completion of the shallow subsurface ground water investigation, three monitor wells were drilled to a depth of 250 feet below ground surface.

In one of the three monitoring wells drilled at the NEF site a very limited ground water source was encountered at depth. Occurring at a depth of 214 to 222 feet below the ground surface, the source consists of a 15-foot thick zone of siltstone, and appears to correspond to a zone of intermittent ground water occurrence documented on the adjacent property to the east. This limited zone occurs within the Triassic redbeds of the Chinle formation, 150 feet to 200 feet thick, and generally an impermeable claystone. The site monitoring well providing water from the zone requires about a week to recover after purging for sampling. The hydraulic conductivity of the zone is calculated as 3.7×10^{-6} cm/sec, and the velocity of ground water flow in the zone is approximately 0.3 ft/yr. Based on data from monitoring wells to the east, ground water levels in this regime do not fluctuate much over time. Based on this information and the lack of ground water encountered in other site borings, the silt unit within the Chinle is not interpreted to meet the definition of an aquifer, which requires that the unit be able to transmit "significant quantities of water under ordinary hydraulic gradients."

The first occurrence of a defined aquifer beneath the site is the Triassic-aged Santa Rosa Formation, almost 800 ft below the land surface at the NEF site. The presence of the thick Chinle formation clay beneath the site essentially isolates that deep hydrologic system.

Attachment C is a copy of the Final Report of the Hydrologic Investigation for the site. It provides all backup ground water information for the site including borings logs for the nine shallow ground water investigation borings, the five geotechnical borings and the construction summaries for the three monitoring wells.

Total Dissolved Solids (TDS) concentration (mg/L) of ground water below the site:	2,500 to 6,650 mg/L
Reference or source for TDS:	NEF Environmental Report Sections 3.4.2 and 3.4.15 and Table 3.4.3 (Note 1)

Note:
1. TDS based on samples from site monitoring wells that ranged from 2,500 to 6,000 mg/L. This is supplemented by data from monitoring wells located on property directly east of the NEF that ranged from 2,880 to 6,650 mg/L.

TECHNICAL ADEQUACY

To be deemed technically adequate, for purposes of issuing the discharge permit, the following information must be provided. [20.6.2.3106, 20.6.2.3107, 20.6.2.3109 NMAC]. Operational, monitoring, contingency, and closure plans must be submitted and must be appropriate for the proposed treatment and disposal type and meet the site specific conditions for the proposed facility.

6. Permit Plans [20.6.2.3106.C.7, 20.6.2.3107.A, and 20.6.2.3109.C NMAC]:

6.a. Operational Plan [20.6.2.3106.C.7 and 20.6.2.3109.C NMAC]:

The operational plan must describe how the system(s) for conveyance, collection, treatment, distribution, and disposal of wastewaters or other discharges will be constructed, operated, inspected, and maintained. The operational plan must demonstrate that ground water standards will not be exceeded.

6.a.i. In the following table, identify all proposed conveyance, collection, treatment distribution, and disposal units included in the operational plan. Add rows as necessary to include all units.

Treatment/Storage/ or Disposal Unit **Treatment units** (lagoon, mechanical treatment plant, manure separator, clarifier, etc.) **Disposal Units** (land application area, leachfield, evaporative lagoon, leachstockpile, etc.)	**Construction Material**	**Volumetric Capacity*/Area*** (gallons or cubic yards/ acres)
Disposal Unit: Site Storm Water Detention Basin (SSDB) – The ultimate disposal of basin water (site storm water runoff) will be through infiltration to the ground and evaporation.	The basin will be constructed using a combination of excavation below the ground surface and an earth berm above grade. The basin is unlined. The basin will have a minimum of 2 feet of freeboard. The basin will have an outfall. The outfall will consist of a concrete structure with a discharge pipe sized and located to provide the proper flow attenuation. The basin will be maintained free of debris and will be enclosed by a fence to prevent entry by animals and unauthorized personnel.	The basin is sized to contain runoff for a volume equal to that for the 24-hour, 100-year return period storm. The basin will have approximately 23,350 m^3 (100 acre-ft) of storage capacity. Surface Area at High Water Elevation = 19.0 acres.
Disposal Unit: UBC Storage Pad Storm Water Retention Basin (USPSRB) – The ultimate disposal of basin water (UBC Storage Pad storm water runoff, Cooling Tower blowdown and Heating Boiler blowdown) will be through evaporation.	The basin will be constructed using a combination of excavation below the ground surface and an earth berm above grade. The basin is designed with a synthetic membrane lining to minimize any infiltration into the ground and does not have an outlet. The synthetic liner will be used to impose a barrier between the contents of the basin and the underlying soils and potential access to ground water. Access to any ground water is further impeded by the impervious clay layer underlying the liner. The basin liner will be selected and installed in accordance with NMED Guidelines for Liner Material and Site Preparation for Synthetically-Lined Lagoons, dated December 11, 1995. To provide adequate chemical resistance to the various liquids, the liner material may consist of High Density Polyethylene (HDPE) or Ethylene Interpolymer Alloy (Coolgard® XR-5® or Ultra	The basin is sized to contain runoff for a volume equal to twice that for the 24-hour, 100-year return frequency storm. The design volume is approximately 77,700 m^3 (63 acre-ft). Surface Area at High Water Elevation = 18.9 acres.

	Tech®). Liner thickness will be specified during final design. From the bottom up the proposed liner system will consist of: • A prepared layer, minimum 2-foot thick, of on site clay-type soils, free from rock, compacted at optimum moisture content to 95% of Standard Proctor ASTM D698. The plastic limit of the clay will be approximately 20 and the material will be compacted to +3% of it's optimum moisture content. • A geosynthetic fabric suitable for the material being retained. • A prepared layer, minimum 1-foot thick, of on site clay, free of rock, and compacted at optimum moisture content • Installation of the liner will be by manufacturer certified installers and will be installed and tested according to project specifications. The basin will be maintained free of debris and will be enclosed by a fence to prevent entry by animals and unauthorized personnel.	
Disposal Unit: Treated Effluent Evaporative Basin (TEEB) – The ultimate disposal of liquid effluent from the Liquid Effluent Collection and Treatment System will be through evaporation.	The basin will be constructed using a combination of excavation below the ground surface and an earth berm above grade. The basin will be double-lined and provided with a leak detection system. The two synthetic liners are used to impose two barriers between the contents of the basin and the underlying soils and potential access to ground water. Access to any ground water is further impeded by the impervious clay layer underlying the liner. These synthetic liners are known as the primary (upper) and secondary (lower) liner. The basin is designed with a synthetic membrane lining to preclude any infiltration into the ground. The basin does not have an outlet. The basin liner will be selected and installed in accordance with NMED Guidelines for Liner Material and Site Preparation for Synthetically-Lined Lagoons, dated December 11, 1995. Access to ground water is further impeded by the impervious clay layer which underlies the secondary liner. Active liquid-sensor leak detection will be provided to detect leakage through the upper primary liner. The system is a drain/sump system. The chemical compatibility of the liners has been	Total annual discharge will be approximately 2,535 m^3 per year (669,844 gal/yr). The basin has a surface area of 0.75 acres and a maximum normal operating depth of 1.1 feet above the bottom of the basin. Total basin depth is 4.2 feet. Surface Area at High Water Elevation = 1.75 acres

	verified with the liner manufacturer. To provide adequate chemical resistance to the various liquids, the liner material may consist of High Density Polyethylene (HDPE) or Ethylene Interpolymer Alloy (Coolgard® XR-5® or Ultra Tech®). Liner thickness will be specified during final design. From the bottom up the proposed liner system will consist of: • A prepared layer, minimum 2-foot thick, of on site clay-type soils, free from rock, compacted at optimum moisture content to 95% of Standard Proctor ASTM D698. The plastic limit of the clay will be approximately 20 and the material will be compacted to +3% of it's optimum moisture content. • A geosynthetic fabric suitable for the material being retained. • Leak collection piping, sump, and pumping system to pump any leaks back to the primary liner system. • A geomembrane drainage mat with the imbedded leak collection piping. • A geosynthetic fabric suitable for the material being retained • A prepared layer, minimum 1-foot thick, of on site clay, free of rock, and compacted at optimum moisture content • Installation of the liner will be by manufacturer certified installers and will be installed and tested according to project specifications. The basin does not have an outlet. The basin is designed to retain 30 years of solids accumulation and annual liquid effluent discharge and direct rainfall. The basin is sized to include a safety factor of 200% times the maximum storm water from a single rainfall event. The basin is designed for an annual evaporation of 80 inches per year. The basin is designed with two cells, each designed to evaporate 50% of the annual liquid effluent discharge, allowing for periodic outages of each cell, while maintaining plant operations. Influent flow will be measured and totalized. Pond level gauges will be provided. The basin will be maintained free of debris and will be enclosed by a fence to prevent entry by animals and unauthorized personnel. The basin	

	will be covered by surface netting, or other suitable devices, to exclude waterfowl access to basin water.	
Disposal Unit: Septic Tanks and Leachfields (ST/L) – The ultimate disposal is discharge underground via the leachfields.	Septic tank drain field systems will be constructed in accordance with 20.7.3 NMAC and requirements of the local building officials and health department. During final design the proposed location, length of drain field and orientation of septic systems will be selected by the design engineer and approved in the field by local building officials.	The percolation rate established by actual tests on the site is 8 minutes per inch. Utilizing this rate and allowing for 20-30 gallons per person per day, each person will require approximately 9 linear foot of trench utilizing a 36 inch wide trench filled with 24 inches of open graded crushed stone. The site population during operation is expected to be 210 persons. The building facilities are designed by architectural code analysis to accommodate approximately 420 persons. A total of approximately 3,200 linear feet of percolation drain field will be required. Thus the combined area of the leachfields will be approximately 9,600 ft^2.

*Volumetric Capacity must be provided for all tanks, chambers, and impoundments or other storage units.
*Area must be provided for all land application areas, leachfields or other area features.

6.a.ii. Describe in detail the operational plan, including all conveyance, collection, treatment, distribution and disposal systems. Attach additional pages as necessary:

Site Storm Water Detention Basin

The Site Storm Water Detention Basin collects a portion of general site storm water from plant areas (except for the UBC Storage Pad area). Site runoff will be collected through a series of catch basins and roof drains connected to the site underground storm water system. The runoff will be conveyed to the basin via a system of underground pipes. All runoff will be discharged into the basin.

The NEF also will have a diversion ditch and berm to divert any upstream surface runoff (overland sheet flow) around the facility. The east portion of this diversion ditch also discharges through the Site Storm Water Detention Basin. The storm water from the diversion ditch will be routed through the basin, but will not be changed in either volume or runoff rate. The western portion of the diversion ditch will drain into the natural terrain and will eventually flow into the culvert system under New Mexico Highway 234. This diversion ditch will be designed to divert the 100-year return period storm around the plant structures.

This basin will have an outlet. The basin is designed to cause post-construction peak flow runoff rates to equal or be less than pre-construction release rates for the facility site runoff. The basin will be below 100 acre-feet of storage capacity and less than 15 feet in height. No treatment is provided for in the basin other than some settlement of solids in the runoff.

No plant contaminants are expected to be introduced to this discharge as a result of plant operation. The ultimate disposal of basin water will be through infiltration to the ground and evaporation. The runoff area served includes about 39 ha (96 acres) with the majority of that area being the developed portion of the 220 ha (543 acres) National Enrichment Facility site.

UBC Storage Pad Storm Water Retention Basin

UBC Storage Pad Storm Water Retention Basin is used for the collection of liquid effluent discharges from three sources: 1) storm water runoff from the UBC Storage Pad (8,691,000 gal/yr); 2) the cooling tower blowdown (5,050,000 gal/yr); and 3) the heating boiler blowdown water (36,500 gal/yr). Area served by the basin for storm water runoff includes 9.2 ha (22.8 acres), the total area of the UBC Storage Pad.

Trench drains/catch basins inside the UBC Storage Area will collect storm water within a bermed/sloped area of approximately 22.8 acres. The underground piping system conveying the flow away from the UBC Storage Area will be reinforced concrete pipe with rubber gasketed joints. The underground piping system will discharge into the basin.

The discharge to this basin has a low likelihood of containing trace amounts of uranium washed by rainfall from the exterior of the Uranium Byproduct Cylinders (UBCs) stored on the UBC Storage Pad. Monitoring of the basin will be performed to verify the runoff does not contain uranium.

Blowdown from the Cooling Towers and the Heating Boiler will be routed to the basin via underground piping.

No treatment is provided for in the basin. The basin is designed with a synthetic membrane lining to minimize any infiltration into the ground and does not have an outlet. The synthetic liner will be used to impose a barrier between the contents of the basin and any natural soils and potential access to the underlying soil. The ultimate disposal of basin water will be through evaporation.

Treated Effluent Evaporative Basin

The Treated Effluent Evaporative Basin receives discharge from the Liquid Effluent Collection and Treatment System. A description of the Liquid effluent Collection and Treatment System is provided in Attachment D. This description was adapted from the NEF Safety Analysis Report.

No treatment is provided for in the basin. The basin is designed with a double synthetic membrane lining system to preclude any infiltration into the ground. The basin does not have an outlet. The ultimate disposal of basin water will be through evaporation.

The basin area will be enclosed by a fence to prevent entry by animals and unauthorized personnel and the basin surface will contain a layer of netting or other suitable device to exclude waterfowl.

The facility's Liquid Effluent Collection and Treatment System provides a means to control liquid effluent within the plant including the collection, analysis, and processing of plant liquid effluents for disposal. Numerous types of aqueous and non-aqueous liquid effluents are generated in the NEF. These effluents may contain uranic compounds, may be potentially contaminated with low-levels of uranic compounds, or may be non-contaminated. Table E.1 in Attachment E summarizes the plant sources of potential effluent contamination

prior to treatment. Treated effluent from the NEF Liquid Effluent Collection and Treatment System is analyzed prior to release and pH adjusted to fall within the range of 6.5 to 9.0, which complies with the ground water standards of 20.6.2.3103 NMAC. Other than uranic content and pH, the plant processes should not affect or introduce any of the other water contaminants listed in 20.6.2.3103 NMAC to the NEF effluent that is discharged to the Treated Effluent Evaporative Basin.

The Liquid Effluent Collection and Treatment System will be constructed with appropriate corrosion resistant metallic or plastic materials. None of the effluents are of a chemical nature that require special construction materials. All process piping in the Liquid Effluent Collection and Treatment System is designed in accordance with American Society of Mechanical Engineers, ASME B31.3 process piping. To provide system integrity and prevent leaks, welded construction is used everywhere practical. All collection tanks are designed in accordance with the American Water Works Association (AWWA) or ASME standards. All tanks have inspection hatches. The tanks and piping of the system are periodically inspected and there are a number of check values, gauges and other process enunciators and warning lights that provide the plant control room operator clear indications of process equipment failures and malfunction before an adverse environmental condition can develop.

The treated effluent from the Liquid Effluent Collection and Treatment System is discharged to the Treated Effluent Evaporative Basin (TEEB), located just east of the UBC Storage Pad Storm Water Retention Basin (see Attachment A, NEF Detailed Site Map). The TEEB is provided for the collection and containment of the liquid effluent discharge from the Liquid Effluent Collection and Treatment System. Total annual discharge to the TEEB will be approximately 2,535 m^3/yr (669,844 gal/yr). The liquid effluent will be discharged in batch releases. The calculated average discharged concentration of uranic compounds into the TEEB (0.22 mg/L) is well below the 5 mg/L concentration limit listed in 20.6.2.3103 NMAC. The ultimate disposal of the liquid effluent discharge will be through evaporation of water and permanent impoundment of the residual dry solids by product evaporation.

On an annual basis approximately 570 grams (1.26 lbs) of uranic compounds will be discharged to the basin. The compounds are uranyfluoride UO_2F_2 and uranium tetrafluoride UF_4 in both soluble and insoluble states.

Septic Tanks and Leachfields

The Septic System is designed to collect, transport and treat all domestic sewage generated at the NEF. The system is capable of handling approximately 10,600 gal/day based on a design number of employees of 422.

Based on the actual number of employees, 210, the system will receive approximately 5,300 gal/day.

The system includes multiple septic tanks and drain fields. A total of six septic tanks and fields are located around the site.

Conveyance, collection, treatment, distribution and disposal of septic wastes are provided by six separate septic systems including separate tanks and leachfields installed at various locations around the site (See Attachment A, NEF Detailed Site Map). Total annual design discharge will be approximately 3.87 million gal/yr. Designs will be consistent with NMED's Guidelines for Plans and Specifications for Discharge Permit Applications Using Septic Tank/Leachfields. Actual flows will be approximately 50 percent of the design values.

The percolation rate established by actual tests on the site is 8 minutes per inch. Utilizing this rate and allowing for 20-30 gallons per person per day, each person will require 9 linear foot of trench utilizing a 36 inch wide trench filled with 24 inches of open graded crushed stone.

The site population during operation is expected to be 210 persons. The building facilities are designed by architectural code analysis to accommodate up to 420 persons. Therefore a total of approximately 3,200 linear feet of percolation drain field will be required. Thus the combined area of the leachfields will be approximately 9,600 ft^2.

20.6.2.3109.C Approval Demonstration

The NEF Ground Water Discharge Plan addresses the three basins (Site Stormwater Detention Basin (SSDB), UBC Storage Pad Stormwater Retention Basin (USPSRB), and the Treated Effluent Evaporative Basin (TEEB)) and the series of septic systems. Periodic sampling and testing of discharges to the basins and sampling of ground water in monitoring wells at the site will assure no adverse ground water impacts.

The discharges resulting from the operation of the NEF are approvable under 20.6.2.3109.C NMAC because (1) the discharges will not exceed the ground water standards of 20.6.2.3103 NMAC and will not contain a toxic pollutant within the meaning of 20.6.2.7.VV NMAC; (2) the amount of effluent entering the subsurface from the TEEB will be minimized by use of double synthetic liners; (3) the amount of effluent entering the subsurface from the USPSRB will be minimized by use of a synthetic liner; and (4) the site discharges will not cause or contribute to concentrations in ground water in excess of the ground water standards in 20.6.2.3103 NMAC at a place of withdrawal for present or reasonably foreseeable future use.

Water quality impacts will be controlled during construction by compliance with the State of New Mexico's water quality regulations and the use of best management practices (BMPs) as detailed in the site Stormwater Pollution Prevention Plan (SWPPP). A SWPPP and a Spill Prevention, Control and Countermeasure (SPCC) plan will be implemented for the operating facility to minimize the possibility of spills of hazardous substances, minimize the environmental impact of any spills and ensure prompt and appropriate remediation.

The SSDB will receive runoff from various parts of the site including roads, parking areas and building roofs. The quality of the runoff will be typical of industrial facility stormwater runoff. The runoff is expected to meet the standards in 20.6.2.3103 NMAC. Some of the runoff will infiltrate into the ground under the basin. The infiltrated waters are expected to potentially recharge the limited ground water system at the 214 to 222 foot depth or return to the atmosphere via evapotranspiration. This ground water regime is not a reliable source of ground water supply. This is demonstrated by the difficulty in obtaining water samples at NEF and the adjacent facility, Waste Control Specialists (WCS), from this layer. No uranium or other plant constituents are expected to be contained in this runoff. The runoff is not expected to contain any of the toxic pollutants as defined in 20.6.2.7.VV NMAC. The runoff to the basin will be monitored as part of the site monitoring program. The basin has a single outlet and has sufficient freeboard so as not to overflow during extreme rainfall events (equal to the volume of the 24-hour, 100-year return period rainfall event). Therefore, based on the above, even if any of the infiltrated waters reach the ground water, the applicable ground water standards in 20.6.2.3103 NMAC will be met.

The USPSRB will receive runoff from the UBC Storage Pad and blowdown (cooling tower and heating boiler). The quality of the stormwater runoff will be typical of industrial facility stormwater runoff. The runoff and blowdown waters discharged to the basin are expected to meet the standards in 20.6.2.3103 NMAC. No uranium or other plant constituents are expected to be contained in this runoff. The runoff is not expected to contain any of the toxic pollutants as defined in 20.6.2.7.VV NMAC. The runoff to the basin will be monitored as part of the site monitoring program. The single lined basin will limit any infiltration into the ground.

The basin is designed with a synthetic membrane lining to minimize any infiltration into the ground and does not have an outlet. The synthetic liner will be used to impose a barrier between the contents of the basin and the underlying soils and potential access to ground water. Access to any ground water is further impeded by the impervious clay layer underlying the liner. The basin liner will be selected and installed in accordance with

NMED Guidelines for Liner Material and Site Preparation for Synthetically-Lined Lagoons, dated December 11, 1995. To provide adequate chemical resistance to the various liquids, the liner material may consist of High Density Polyethylene (HDPE) or Ethylene Interpolymer Alloy (Coolgard ® XR-5® or Ultra Tech®). Liner thickness will be specified during final design.

Any minor leakage past the liner will infiltrate into the ground under the basin. The infiltrated waters are potentially expected to recharge the limited ground water system at the 214 to 222 foot depth or return to the atmosphere via evapotranspiration. This ground water regime is not a reliable source of ground water at the site. This is demonstrated by the difficulty in obtaining water samples at NEF and WCS from this layer. The basin has no outlet and has sufficient freeboard so as not to overflow during extreme rainfall events (twice the volume of the 24-hour, 100-year return period rainfall event). Therefore, based on the above, it is concluded that even if any of the basin waters infiltrated into the ground, the applicable ground water standards provided in 20.6.2 NMAC will be met.

The TEEB will receive discharge from the plant Liquid Effluent Collection and Treatment System. The facility's Liquid Effluent Collection and Treatment System provides a means to control liquid effluent within the plant including the collection, analysis, and processing of plant liquid effluents for disposal. These effluents may contain uranic compounds, may be potentially contaminated with low-levels of uranic compounds, or may be non-contaminated. Treated effluent from the NEF Liquid Effluent Collection and Treatment System is analyzed prior to release and pH adjusted to fall within the range of 6.5 to 9.0, which complies with the ground water standards of 20.6.2.3103 NMAC. Other than uranic content and pH, the plant processes should not affect or introduce any of the other water contaminants listed in 20.6.2.3103 NMAC to the NEF effluent that is discharged to the TEEB. The discharge to the TEEB is not expected to contain any of the toxic pollutants as defined in 20.6.2.7.VV NMAC. The discharge to the basin will be monitored as part of the site monitoring program. The basin has no outlet and has sufficient freeboard so as not to overflow during extreme rainfall events (twice the volume of the 24-hour, 100-year return period rainfall event).

The TEEB is designed with double synthetic membrane linings to minimize any infiltration into the ground and does not have an outlet. The synthetic liners will be used to impose a barrier between the contents of the basin and the underlying soils and potential access to ground water. Access to any ground water is further impeded by the impervious clay layer underlying the lower liner. The basin liners will be selected and installed in accordance with NMED Guidelines for Liner Material and Site Preparation for Synthetically-Lined Lagoons, dated December 11, 1995. To provide adequate chemical resistance to the various liquids, the liner material may consist of HDPE or Ethylene Interpolymer Alloy (Coolgard ® XR-5® or Ultra Tech®). Liner thickness will be specified during final design.

Any minor leakage past the primary liner will be collected by the leak detection system. Annual discharge to the basin is 669,884 gallons per year (approximately 2.1 acre-feet per year). The double-lined basin with leak detection will impose a barrier between the contents of the basin and the underlying soils and potential access to ground water. Based on the above, all applicable ground water standards provided in 20.6.2.3103 NMAC will be met.

Moreover, any leak past the primary (upper) liner would be collected by a piping collection system and routed to a monitored sump. The sump will be continuously monitored with a level indicator. If the sump is collecting liquid the level monitor will alert site staff and compensatory measures will be taken. The secondary (lower) liner will preclude discharge to the subsurface in the case of a breach in the primary liner.

Catastrophic failure of both TEEB liners is not considered credible. Such a failure, if it were to occur, should be noticeable to plant staff due to rapid draining of any discharge into the TEEB. Given the average discharge to the TEEB is 1,835 gal/day, corrective actions would be taken before appreciable amounts of liquid reached the

subsurface. Since the discharge liquid effluent quality meets all 20.6.2.3103 NMAC standards, no adverse impacts would occur. The corrective actions taken would restore the system integrity.

The Site Septic Systems will discharge to the subsurface approximately 5,300 gallons per day for the 210 site employees. The quality of the discharge will be typical of sanitary wastes. The infiltrated waters are expected to potentially recharge the limited ground water system at the 214 to 222 foot depth or return to the atmosphere via evapotranspiration. This ground water regime is not a reliable source of ground water. This is demonstrated by the difficulty in obtaining water samples at NEF and WCS from this layer. The deeper Santa Rosa aquifer is well isolated from the septic system discharge. No uranium or other plant constituents are expected to be contained in this discharge. The discharge is not expected to contain any of the toxic pollutants as defined in 20.6.2.7.VV NMAC. The total surface area of the leach fields is 9,600 square feet. Given this area, the discharge rate of 5,300 gallons per day and approximately a 200-foot vertical separation between the leach fields and the limited ground water, travel time to the limited ground water source from the leach fields will be substantial. Therefore, based on the above, even if any of the infiltrated waters were to reach the ground water, the applicable ground water standards in 20.6.2.3103 NMAC will be met.

The limited ground water at a depth of 214 to 222 feet below the ground surface at NEF has a TDS concentration range between 2,500 to 6,650 mg/L. This range is based on data collected at NEF and WCS.

Very limited ground water was encountered at a depth of 214 to 222 feet below the ground surface at the site. To be ground water for which the standards are applicable, 20.6.2.7.Y NMAC requires that the water be capable of entering a well in sufficient amounts to be utilized as a water supply. The limited ground water source is demonstrated by the difficulty in obtaining ground water samples in the installed monitoring wells at the site and the slow recovery of the wells after sampling. Based on field studies at both NEF and WCS, sufficient ground water in this zone is not available under either site. The much deeper Santa Rosa aquifer is isolated from the surface by a substantial thickness of Chinle clay. Depth to the Santa Rosa aquifer is approximately 244 m (800 ft). This aquifer is separated from the surface by a thick (over 180 feet) red bed clay unit, the Chinle Formation. At the adjacent facility, WCS, water from the Santa Rosa is used as fire water and for some process systems. It is not used for potable water. Water from the Santa Rosa is also used locally as a source of water for cattle. These site features (limited ground water at a depth of 214 to 222 feet below the site and the well isolated Santa Rosa aquifer) negate any significant potential that ground water could be adversely impacted by plant discharges to the subsurface.

Based on the above, the discharges resulting from the operation of the NEF are approvable under 20.6.2.3109.C NMAC.

6.a.iii. Describe the operations and maintenance plan that will be followed to ensure the system is maintained as described. At a minimum the plan must include monthly inspections of all wastewater treatment and disposal units. Attach additional pages as necessary.

<u>The Operations and Site Storm Water Detention Basin</u>

The SSDB will be inspected monthly for debris, obstructions and other impediments to water flow. The SSDB outfall discharge point will also be inspected monthly to ensue the outfall is unobstructed so that storm water overflow is discharged in a controlled manner that does not cause soil erosion or wash-out areas near New Mexico Highway 234. Maintenance issues identified during the periodic inspections will be addressed to ensure proper system operation by implementing corrective measures. Since the SSDB contains only site rainwater runoff, there is little, or no possibility of plant-related contaminants entering the SSDB. The areas adjacent to and nearby the SSDB will protected from site sources that could introduce contaminants through

the use of best management practices (BMPs). These BMPs will include: 1) site stabilization actions such as placing crushed stone on top of disturbed soil in areas of heavy runoff; 2) protection of disturbed areas with silt fencing and straw bales; 3) berming of all above-ground diesel storage tanks; 4) any hazardous materials will be handled by approved methods and shipped offsite to disposal sites, no hazardous waste will be stored onsite longer than 90 days; and 5) a Spill Prevention Control and Countermeasure (SPCC) plan will be implemented for the facility to identify potential spill substances, sources and responsibilities.

UBC Storage Pad Storm Water Retention Basin

The basin and UBC Storage Pad conveyance systems will be inspected on a monthly basis for debris, obstructions and other impediments to water flow. The UBC Storage Pad will be inspected for cracks in the concrete surface, and vegetation growth between expansion joints in the concrete surface. The basin will be inspected for build-up of solids. Maintenance issues identified during the periodic inspections will be addressed to ensure proper system operation by implementing corrective measures.

The UBC Storage Pad Storm Water Retention Basin is designed with two cells, each designed to evaporate 50% of the annual influent flow, allowing for periodic outages of each cell, while maintaining the plant operations. The design depth of the basin will be sufficient to allow for one annual outage of one month duration for inspection and maintenance of each cell. Influent flow will be measured and totalized; basin gauges will be provided. An all-weather access road will be provided to the basin to allow year-round maintenance of the basin and its conveyances. The added concentrations of biocides, corrosion inhibitors, dissolved solids, sulfates and pH adjusting chemicals in blowdown waters will be monitored and recorded periodically in accordance with the manufacturers' recommendations.

Periodic sampling of the basin water and basin sediments will allow for detection of radioactivity in the very unlikely event of radioactivity from the exterior of the Uranium Byproduct Cylinders (UBCs) entering the basin at above background levels.

Treated Effluent Evaporative Basin

The basin will be inspected on a monthly basis for debris, obstructions, other impediments to water flow and for the build-up of solids in the basin. Maintenance issues identified during the periodic inspections will be addressed to ensure proper system operation by implementing corrective measures.

The TEEB is designed with two cells, each designed to evaporate 50% of the annual influent flow, allowing for periodic outages of each cell, while maintaining the plant operations. The design depth of the basin will be sufficient to allow for one annual outage of one month duration for inspection and maintenance of each cell. Influent flow will be measured and totalized; basin gauges will be provided. An all-weather access road will be provided to the basin to allow year-round maintenance of the basin and its conveyances. The basin area will be enclosed with animal-friendly fencing to prevent wildlife access and unauthorized personnel. A surface net or equivalent covering will placed over the basin to prevent the landing of waterfowl and other birds.

Two synthetic liners will be utilized to impose two barriers between the contents of the TEEB and the soil underneath. Access to the soil underneath is further impeded by the impervious natural clay layer. In addition, a drainage/sump leak detection system will be installed between the liners to detect liner failures. The leak detection system will be inspected monthly to monitor for any leakage. Periodic sampling of the TEEB water and sediment will ensure that the uranic concentrations of both are not above the levels expected for the discharge effluent from the Liquid Effluent Collection and Treatment System.

Site Septic System

The site septic system consists of six separate tanks each with one or more leachfields. Each tank will be periodically inspected and pumped for solids and each distribution manifold in the leachfield will be inspected, and if necessary, cleaned and repaired at the time of the solids pumping. A sample of the solids will be collected and analyzed for isotopic uranium to verify the absence of plant uranic materials in the tank sludge.

6.b. Monitoring Plan [20.6.2.3106.C.5 and 20.6.2.3107.A.1-9 NMAC]:

The monitoring plan must describe how the facility will be monitored to ensure the discharge will not adversely impact ground water quality. The plan must include all monitoring locations (effluent sampling, monitoring wells, lagoons, soil sampling, plant tissue analysis, etc.). Monitoring locations must be included on the facility map.

The NEF Monitoring Plan developed for the Ground Water Discharge Plan will incorporate the applicable requirements outlined in 20.6.2.3107 NMAC, in addition to other monitoring requirements at the NEF. Features of the overall monitoring plan are described below. Further details are provided in Attachment E.

The NEF Detailed Site Map (see Attachment A) indicates the location of onsite sampling locations. Media monitored includes soil, vegetation, basin water, basin sediment and ground water.

Each year, the NEF will submit a summary report of the environmental sampling program to the NMED, including all associated data as required by 20.6.2 NMAC. The report will include the types, numbers, and frequencies of environmental measurements and the identities and activity concentrations of facility-related nuclides found in environmental samples, in addition to the minimum detectable concentrations (MDC) for the analyses and the error associated with each data point. Significant positive trends in activities will also be noted in the report, along with any adjustment to the program, unavailable samples, and deviation to the sampling program.

6.b.i. Monitoring Locations. In the following tables, identify all monitoring locations. Add additional rows as necessary to include all monitoring locations.

Flow, Effluent and Ground Water Monitoring

Monitoring Location	Lat	Long	Northing	Easting	Elevation (also specify at what point in well casing)	Sampling Frequency per year	Reporting Frequency per year	Water or Soil Contaminant Type (please refer to 20.6.2.7.uu, and 20.6.3103 NMAC)
SSDB[1]	32° 25' 51"	103° 04' 41"	522743	928641	3393	Quarterly	Annual	Oil & grease, pH, uranium isotopic, fluoride, TDS, metals, nitrates, sulfate
USPSRB[2]	32° 26' 02"	103° 03' 03"	523955	937027	3396	Quarterly	Annual	Oil & grease, pH, uranium isotopic, fluoride, TDS, metals, nitrates, sulfate
TEEB[3]	32° 26' 2"	103° 4' 55"	523841	927428	3409	Quarterly	Annual	pH, uranium isotopic, fluoride, TDS, metals, sulfate
GW Well MW-1[4]	32° 26' 32"	103° 04' 58"	526870	927135	Well not installed	Quarterly	Annual	pH, uranium isotopic, fluoride, TDS, sulfate
GW Well MW-2[4]	32° 26' 13"	103° 04' 46"	524962	928186	Well not installed	Quarterly	Annual	pH, uranium isotopic, fluoride, TDS, sulfate
GW Well MW-3[4]	32° 26' 13"	103° 05' 05"	524943	926558	Well not installed	Quarterly	Annual	pH, uranium isotopic, fluoride, TDS, sulfate
GW Well MW-4[4]	32° 25' 54"	103° 05' 04"	523023	926666	Well not installed	Quarterly	Annual	pH, uranium isotopic, fluoride, TDS, sulfate
GW Well MW-5[4]	32° 25' 47"	103° 04' 32"	522348	929417	Well not installed	Quarterly	Annual	pH, uranium isotopic, fluoride, TDS, sulfate
LECTS[5] Discharge	To be provide d in final design	To be provided in final design	To be provided in final design	To be provided in final design	To be provided in final design	Batch Release	Annual	pH, isotopic uranium, both soluble and insoluble forms
Septic Tanks	Varies	Varies	Varies	Varies	Varies	Prior to Pumping	Annual	isotopic uranium, both soluble and insoluble forms

1. Site Storm Water Detention Basin: flow only occurs during precipitation events
2. UBC Storage Pad Storm Water Retention Basin
3. Treated Effluent Evaporative Basin
4. Ground Water Monitoring Well
5. Liquid Effluent Collection & Treatment System pre-release tank sampling

*Identify the sampling locations as designated or named by the facility.

Soil, Plant Tissue and Other Sampling

Monitoring Location*	Lat[1]	Long[1]	Sampling Frequency per year	Reporting Frequency per year	Water or Soil Contaminant Type
land application area soil sampling	NA				
land application area plant tissue analysis	NA				
Other: **Soil/Vegetation**	32° 25' 56"	103° 5' 26"	**Quarterly[2]**	**Annual**	**Isotopic U, Fluoride, metals, organics, pesticides and herbicides**
Other: **Soil/Vegetation**	32° 25' 50"	103° 4' 55"	**Quarterly[2]**	**Annual**	**Isotopic U, Fluoride, metals, organics, pesticides and herbicides**
Other: **Soil/Vegetation**	32° 25' 47"	103° 4' 32"	**Quarterly[2]**	**Annual**	**Isotopic U, Fluoride, metals, organics, pesticides and herbicides**
Other: **Soil/Vegetation**	32° 25' 49"	103° 4' 45"	**Quarterly[2]**	**Annual**	**Isotopic U, Fluoride, metals, organics, pesticides and herbicides**
Other: **Soil/Vegetation**	32° 26' 8"	103° 4' 27"	**Quarterly[2]**	**Annual**	**Isotopic U, Fluoride, metals, organics, pesticides and herbicides**
Other: **Soil/Vegetation**	32° 26' 33"	103° 4' 35"	**Quarterly[2]**	**Annual**	**Isotopic U, Fluoride, metals, organics, pesticides and herbicides**
Other: **Soil/Vegetation**	32° 26' 32"	103° 4' 58"	**Quarterly[2]**	**Annual**	**Isotopic U, Fluoride, metals, organics, pesticides and herbicides**
Other: **Soil/Vegetation**	32° 26' 20"	103° 5' 26"	**Quarterly[2]**	**Annual**	**Isotopic U, Fluoride, metals, organics, pesticides and herbicides**
Other: **Sediment SSDB**	32° 25' 52"	103° 4' 35"	**Annual**	**Annual**	**Isotopic U, Fluoride, metals, organics, pesticides and herbicides**
Other: **Sediment UBCSRB**	32° 26' 7"	103° 5' 2"	**Annual**	**Annual**	**Isotopic U, Fluoride, metals, organics, pesticides and herbicides**
Other: **Sediment TEEB**	32° 26' 2"	103° 4' 55"	**Annual**	**Annual**	**Isotopic U, Fluoride, metals, organics, pesticides and herbicides**

1. Approximate locations, exact locations will be determined during final design
2. Samples in growing seasons for vegetation only

6.b.ii. Describe in detail the sampling protocols that will be used for sample collection at all monitoring locations. Attach additional pages as necessary.

The sample collector shall be required to don the appropriate personal protective equipment, safety equipment and have a companion collector in remote areas or when collecting at sites that may involve physical hazards (basins, culverts, septic tanks, etc.). In addition, all collection containers shall be labeled with the site identification information, GPS coordinates, date and time of the collection, the collectors name and phone number and the requested analyses. A laboratory sample submission form and a sample chain of custody form will be completed by the collector before transferring custody of the sample to someone else. Normal chain-of-custody procedures will be observed at all times and tamper-proof tape should be used on all container covers and lids. All sampling will be covered by procedures and sample collectors will be trained to these sampling procedures.

Sampling protocol details are provided in Attachment F for the following media:

- Water
- Basin Bottom Sediment
- Vegetation
- Soil
- Ground Water

The protocols address the actual collection of the sample, the amount of the sample, field addition of preserving chemicals if required, the container, container labeling, sample submission forms and shipping requirements.

6.b.iii. Standard Monitoring Requirements: The following paragraphs are standard permit conditions. Please read the condition and check the boxes that you will comply with as a condition of your permit.

[X] All monitoring wells will be installed according to NMED Monitoring Well Construction and Abandonment Guidelines (copy enclosed).

[X] All monitoring wells (if 3 or more monitoring wells are on site) will be surveyed to a common permanent benchmark and that the survey will be submitted to the NMED, GWQB within 60 days of installation of all monitoring wells. Survey data will include northing, easting, and elevation to the nearest hundredth of a foot. One of the wells may be used as the benchmark.

[X] This facility will measure the depth to ground water in each monitoring well to the nearest hundredth of a foot prior to purging and sampling, and that three well volumes will be purged from each monitoring well prior to sample collection.

[ ] This facility will complete land application data sheets (LADS, copy enclosed) documenting the amount of nitrogen applied to each land application area if applicable. The LADS will incorporate the wastewater volume and analytical results of the wastewater testing to determine total nitrogen applied to each field.

Not Applicable (for land application of waste only)

6.c. Contingency Plan [20.6.2.3107.A.10 NMAC]:

The contingency plan must describe the actions to be taken if Regulation 20.6.2.3103 NMAC ground water standards are exceeded or if toxic pollutants are present (20.6.2.7.uu) as a result of discharges regulated under the proposed permit, and to cope with failure of the discharge permit or system.

6.c.i. Standard Contingency Requirements: The following paragraphs are standard permit conditions. Please read the condition and check the boxes that you will comply with as a condition of your permit.

[X] This Facility will comply with the following contingency language:

In the event that monitoring indicates ground water standards are violated or may be violated during the term of the discharge permit or upon post closure monitoring, this facility will collect a confirmation sample from the monitoring wells within 15 days to confirm the initial sampling results. Upon confirmation of contamination, all ground water monitoring will be conducted monthly and a corrective action plan will be submitted to the NMED. The corrective action plan will include a site investigation to define the source, nature and extent of ground water contamination and a proposed abatement option; and a schedule for implementation. The site investigation and abatement option must be consistent with the requirements and provisions of Regulations 20.6.2.4101, 20.6.2.4103, 20.6.2.4106.E, 20.6.2.4107, and 20.6.2.4112 NMAC. The corrective action plan will be submitted to NMED for approval within 30 days of confirmation of ground water contamination, and will be initiated within 30 days of NMED approval.

[X] This facility will comply with the following contingency language:

In the event of a spill or release that is not as prescribed in the approved discharge permit, this facility will take immediate corrective action to contain or mitigate the damage caused by the discharge and will initiate the notifications and corrective actions as required by Regulation 20.6.2.1203 NMAC. Within 24 hours discovery of the incident, this facility will verbally notify NMED and provide the information outlined in Regulation 20.6.2.1203.A.1. NMAC. Within 7 days of discovering the incident, this facility will submit a written verifying the oral notification and providing any additional pertinent information or changes. Within 15 days of the incident, this facility will submit a corrective action plan describing actions taken and/or to be taken to remedy the impact of the unauthorized discharge.

6.c.ii. Specific Contingency Plan:

Describe any additional specific corrective actions or contingencies that will be taken to cope with failure of the discharge system: Attach additional pages as necessary.

Specific contingency planning includes periodic inspections of the discharge systems and investigation of all spills and release. In the event of a tear in any of the basin synthetic liners that results in a release to the environment, an effluent spill or unauthorized discharge, the Ground Water Quality Bureau will be notified pursuant to the standard permit condition 6.c.i.

The Permitee will assess damages to the environment and attempt to isolate any discharge, and corrective measures will be implemented immediately.

6.d. Closure Plan [20.6.2.3107.A.11 NMAC]:

The closure plan must describe the closure actions to be taken to prevent Regulation 20.6.2.3103 NMAC ground water standards from being exceeded, or the introduction of a toxic pollutant in ground water after cessation of operations. At a minimum, the closure plan must include a description of closure measures, post closure monitoring plans, and financial assurance (if required by NMED).

6.d.i. Specific Closure Plan: Describe the specific closure activities to ensure that ground water quality will be protected after cessation of operations. The plan shall include plugging, removal, and/or filling of all conveyance, collection, treatment, distribution and disposal features in order to prevent future discharges at the facility. The plan must also describe how all liquid and solid wastes will be removed and disposed of according to local, state, and federal laws. The plan must also describe how disturbed areas will be backfilled to blend with the original surface topography to prevent future ponding and to prevent a discharge at the facility from occurring after the cessation of operations. Attach additional pages as necessary.

Closure Plan

The plan for decommissioning the NEF is to promptly decontaminate or remove all materials from the site which prevent release of the facility for unrestricted use. This approach will avoid long-term storage and monitoring of wastes on site.

At the end of useful plant life, the enrichment facility will be decommissioned such that the site and remaining facilities may be released for unrestricted use as defined in 10 CFR 20.1402. Enrichment equipment will be removed; only building shells and the site infrastructure will remain. All remaining facilities will be decontaminated where needed to acceptable levels for unrestricted use.

Each of the three site basins and the septic system will be closed in accordance with any pertinent regulations.

The Treated Effluent Evaporative Basin is expected to contain residue from the effluent treatment systems. The sediment and soil over the top of the uppermost liner and the liner itself will be disposed of, if required, at a low-level waste facility. The leak detection system components will also be removed and disposed of appropriately. Excavations and berms will be leveled to restore the land to a natural contour.

The UBC Storage Pad Storm Water Retention Basin is not expected to contain any contaminants from the plant. The sediment and soil over the top of the liner and the liner itself will be tested and disposed of, as appropriate. Any components found containing contamination from the plant will be properly handled and disposed of in accordance with pertinent regulations. Excavations and berms will be leveled to restore the land to a natural contour.

During plant operation, a number of depleted uranium byproduct cylinders (UBC) will be stored on the UBC Storage Pad. These cylinders are sealed and checked prior to placement on the UBC Storage Pad and periodically inspected. All cylinders remaining on the UBC Storage Pad

at cessation of plant operation will be sent to a de-conversion facility or other off-site facility. The UBC Storage Pad will be addressed during facility decommissioning. No contamination of stormwater runoff from the UBC Storage Pad is expected during the life of the facility. This is corroborated by experience from the operating experience of similar facilities in Europe. However, the runoff will be monitored as part of the site monitoring program.

The Site Storm Water Detention Basin sediment will be sampled and tested and removed for proper disposal as needed. Excavations and berms will be leveled to restore the land to a natural contour.

Closure of site septic systems will be done in accordance with NMED's Guidelines for septic systems. Residual materials will be sampled and tested for contamination prior to system abandonment.

Ground water monitoring wells will be decommissioned in keeping with state regulations at a time when they are no longer required for monitoring activities.

All relevant closure documents will be retained post-decommissioning for the time period required for their retention.

LES intends to utilize a surety method, such as a letter or line of credit or surety bond, to provide reasonable assurance of decommissioning funding as required by 10 CFR 40.36(e)(2) and 70.25(f)(2). Finalization of the specific financial instruments to be utilized will be completed, and signed originals of those instruments will be provided to the NRC, prior to LES receipt of licensed material. LES intends to provide continuous financial assurance from the time of receipt of licensed material to the completion of decommissioning and termination of the license. Since LES intends to sequentially install and operate the Separations Building Modules over time, financial assurance for decommissioning will be provided during the operating life of the NEF at a rate that is in proportion to the decommissioning liability for these facilities as they are phased in.

The surety method adopted by LES will provide an ultimate guarantee that decommissioning costs will be paid in the event LES is unable to meet its decommissioning obligations at the time of decommissioning. The surety method will also be structured and adopted consistent with applicable NRC regulatory requirements and in accordance with NRC regulatory guidance contained in NUREG-1727.

6.d.ii. Standard Closure Requirements: The following paragraphs are standard permit conditions. Please read the condition and check the boxes that you will comply with as a condition of your permit.

This facility will comply with the following closure requirements:

[X] The discharger will notify NMED at least 30 days prior to cessation of operations and will provide a schedule for implementation of the closure plan.

[X] This facility will conduct post closure monitoring at the frequency and locations prescribed under the active permit for a period approved by NMED. If Regulation 20.6.2.3103 NMAC ground water standards are violated or toxic pollutants are present during post closure monitoring, this facility will implement the contingency plan required in the active permit.

[X] All monitoring wells will be plugged and abandoned in accordance with NMED Monitoring Well Construction and Abandonment Guidelines once NMED has agreed in writing that post closure ground water monitoring may cease.

[X] Once NMED has approved all closure activities, this facility will submit a letter requesting termination of the discharge permit.

TECHNICAL SUPPORT

The following information must be submitted as required by Regulation 20.6.2.3106, and 20.6.2.3109 NMAC.

7. Other Discharge Locations [20.6.2.3106.C.2 NMAC]:

7.a. List the locations of any other discharges at this facility not covered by this permit but permitted under the New Mexico Liquid Waste Disposal Regulations, Hazardous Waste Management Regulations, Federal Clean Water Act (NPDES), and any un-permitted discharges. Add rows as necessary to include all other discharge locations.

No other discharge locations are present.

Discharge Type (septic tank/leachfields, surface water discharges, etc.)	Permit Identification	Discharge Location Description

7.b. **Area Map:** On the appropriate United States Geological Survey (USGS) 7.5 minute topographic quadrangle map, identify the location of all water supply wells, injections wells, seeps, springs, bodies of water, and watercourses within one mile of the outside perimeter of the discharge site.

The area map is provided in Attachment G.

The local road map is provided in Attachment H.

Directions to the site: Drive 5 miles eastbound from the City of Eunice, New Mexico, on New Mexico Highway 234. The NEF site is approximately one mile west of the Texas border on the north side of New Mexico Highway 234.

8. Flooding Potential [20.6.2.3106.C.4 NMAC]:

8.a. Describe the flooding potential of the discharge site based on the latest Federal Emergency Management Agency flood plain map or site specific analysis:

Flooding Potential

The NEF site is located above the 100 or 500-year flood elevation. The NEF site is contained within the Landreth-Monument Draw Watershed. The closest water conveyance is Monument Draw, a typically dry, intermittent watercourse located about 2.0 miles west of the site. The maximum historical flow for Monument Draw is 1,280 ft^3/s measured June 10, 1972. All other historical maximum measurements are below 70 ft^3/s.

The location of the NEF site is not mapped by the FEMA flood mapping program due to the lack of surface hydrologic features in the area and low flood potential.

Flood information for the City of Eunice from FEMA is provided in Attachment I.

The potential for flash flooding is considered minimal due to the high percolation rate of the soils in the vicinity of the site.

Source for Information:FEMA and the National Enrichment Facility Environmental Report (Part of NRC License Application – Submitted December 2003.

8.b. Describe the methods used to control flooding, run-on and run-off at the discharge site (berms, diversion channels, etc.):

Based on setting the grade level of the facility above the maximum foreseeable flood level, the only potential flooding of the facility results from local intense rainfall. Protection against flooding is provided by establishing the facility floor level at 0.15 m (0.5 ft) above the high point of finished grade elevation and all roads are set at least 0.45 m (1.5 ft) below this. Based on these design features, the probability of the water level reaching the building finished floor is negligible.

Storm water runoff from the site is directed to two storm water basins as described in Section 6.a.ii of the Permit Application.

A diversion ditch and berm will be constructed along the northern portion of the site to divert upstream overland sheet flow around the NEF buildings. This diversion ditch will be designed to divert the 24-hour, 100-year rainfall. The eastern portion of the diversion ditch will be routed through the Site Storm Water Detention Basin (SSDB). The storm water from the diversion ditch will be routed through the basin, but will not be changed in either volume or runoff rate. The western portion of the diversion ditch will be discharged into the natural terrain and will flow south via overland flow to the existing multiple culverts under New Mexico Highway 234.

Mitigation measures will be in place to minimize potential impact on soils from storm water runoff. These include the following items:

- Cleared areas not covered by structures or pavement will be stabilized by acceptable means as soon as practical.
- Surface runoff will be collected in temporary (during construction) and permanent retention/detention basins.
- Drainage culverts and ditches will be stabilized and lined with rock aggregate/rip-rap to reduce flow velocity and prohibit scouring.

9. Geologic and Soil Information [20.6.2.3106.5 NMAC]:

9.a. Lithology: Describe the lithology and thickness of each geologic unit below the discharge site and indicate which units bear water. This information may be obtained from a driller's log or geologic report. Include photocopies of all well logs with the application. Add rows as necessary to include all units.

Unit Description	Thickness (feet)	Water Bearing (Y/N)
Mescalero Sands/Blackwater Draw Formation: Dune or dune-related sands	0 to 10	N
Gatuña/Antlers Formation: Pecos River Valley alluvium consisting of Sand and silty sand with interbedded caliche near the surface and a sand and gravel base layer. Light yellow to reddish brown, dry, very dense silty fine- to medium-grained, caliche-cemented sand with some caliche lenses.	25 to 50	N
Chinle Formation (Dockum Group redbeds): clay mudstone interbedded with silt and sandstone layers. Red to purple, very hard, high plasticity clay.	180 to 450	Y: isolated silt layer only
Santa Rosa Formation (Dockum Group) Sandy red beds, conglomerates and shales.	450 to 760	Y

Source for Information:

National Enrichment Facility Environmental Report, Revision 1, February 2004, Table 3.3-1 based on: BLM, 2003; TTU, 2000; DOE 1997b:

BLM, 2003. Assessment Of Water Resources In Dewey Lake And Santa Rosa Formations, Lea County, New Mexico, A Proposal Through BLM Field Office, Allan Sattler (Sandia National Laboratories) and Jerry Fant (BLM), September 16, 2003.

TTU, 2000. Geology of the WCS-Flying W Ranch, Andrews County, Texas, Texas Tech University Water Resources Center, April, 2000.

DOE, 1997b. Waste Isolation Pilot Plant Disposal Phase Final Supplemental Environmental Impact Statement, Chapter 4, Description of the Affected Environments, U.S. Department of Energy, September, 1997.

Hydrologic Investigation, Section 32; Township 21 Range 38, Eunice, NM, Cook-Joyce, Inc, Austin TX, 19 Nov, 2003.

Note: Attachment C is a copy of the Final Report of the Hydrologic Investigation for the site. It provides all backup ground water information for the site including borings logs for the nine shallow ground water investigation borings, the five geotechnical borings and the construction summaries for the three monitoring wells.

9.b. Soil Map: Attach a copy of the United States Department of Agriculture (USDA) Natural Resources Conservation Service (NRCS) soil survey map and descriptive information for soil(s) associated with the discharge site.

The soil map (see Attachment J) is a taken from the latest county soil survey: USDA Soil Survey of Lea County New Mexico, U.S. Department of Agriculture, Soil Conservation Service in Cooperation with New Mexico Agricultural Experiment Station, January 1974. Site soils are generally sandy, derived from dune sands or the underlying alluvium, are locally cemented by or contain caliche.

10. Signatures:

Owner: I certify that I am the legal owner of the property in which all discharges will occur. I certify that I am knowledgeable about the information contained in this application, and believe the information is true, complete and accurate.

Print Name: _____

Signature: _____ Date _____

Responsible Party* (if property is leased or operated by someone other than the owner):

I certify that I am knowledgeable about the information contained in this application, and believe the information is true, complete and accurate.

Print Name: R. M. Krich
Vice President - Licensing, Safety and Nuclear Engineering
Louisiana Energy Services, LP

Signature: R M Krich Date 4/26/04

* Enclose a signed copy of the lease agreement between the responsible party and the owner of the property on which the proposed discharge will occur. Lease agreement should be valid for the duration of the discharge permit or until the discharge permit is modified to reflect a new lessee.

Attachment K provides the Grant of Easement and Right of Way from the State of New Mexico to LES and the Agreement Regarding Land Use Restrictions or Conditions from the State of New Mexico.

SUMMARY OF APPLICANT'S PUBLIC NOTICE REQUIREMENTS FOR GROUND WATER DISCHARGE PERMITS

The New Mexico Water Quality Control Commission Regulations (20.6.2 NMAC) public notice requirements of 20.6.2.3108 NMAC were revised **effective September 15, 2002** to require the applicant to provide notice to neighboring properties during the discharge permit application process. This document summarizes the applicant's public notice requirements and provides answers to frequently asked questions.

The Water Quality Control Commission Regulations are available on the New Mexico Environment Department's (NMED) internet web site. The web site address is:

www.nmenv.state.nm.us

Click on the heading "Environmental Protection Regulations", then "Water Quality-- Ground and Surface Water Protection". The public notice regulations are in Section 20.6.2.3108 NMAC. You can also call the Ground Water Quality Bureau at (505) 827-2900 and we will mail you a copy of the regulations.

STEP 1 – SELECTING AND IMPLEMENTING A PUBLIC NOTICE OPTION

Anyone applying for a new permit or renewing or modifying an existing permit must provide public notice to neighboring properties (See FAQs). The applicant must select one of three public notice options by checking the selected box on page 3 of the Ground Water Discharge Permit Application. **When the NMED receives the application and deems it administratively complete, we will send the applicant the instructions and materials necessary to implement the selected public notice option.** The applicant must implement the public notice option within 30 days of submitting their application to the NMED. The applicant's public notice options are:

Public Notice Option 1

Posting a sign: The sign must be prominently posted in a conspicuous public location at or near the existing or proposed facility for 30 days. The sign should be visible so that passersby are likely to see it. The sign will be a synopsis of the full public notice prepared by NMED.

and

Sending direct notice to adjacent property owners: The public notice prepared by NMED must be sent to all "adjacent property" "owners of record" by certified mail, return receipt requested.

and

Sending direct notice to the owner of the discharge site: If the applicant is not the owner of the discharge site, the applicant must send the public notice prepared by NMED to the owner, by certified mail, return receipt requested.

Public Notice Option 2

Posting a sign: The sign must be prominently posted in a conspicuous public location at or near the existing or proposed facility for 30 days. The sign should be visible so that passersby are likely to see it. The sign will be a synopsis of the full public notice prepared by NMED.

and

Placing a display advertisement: The display ad must be at least two inches by three inches in size and must be published in a newspaper of general circulation in the location of the proposed discharge. The display ad will be a synopsis of the full public notice prepared by NMED.

and

Sending direct notice to the owner of the discharge site: If the applicant is not the owner of the discharge site, the applicant must send the public notice prepared by NMED to the owner, by certified mail, return receipt requested.

Public Notice Option 3

Sending direct notice to property owners within 1/2 mile of the discharge site: The public notice prepared by NMED must be sent to all property "owners of record" within ½ mile of the discharge site by certified mail, return receipt requested.

and

Sending direct notice to the owner of the discharge site: If the applicant is not the owner of the discharge site, the applicant must send the public notice prepared by NMED to the owner, by certified mail, return receipt requested.

Step 2 - Providing Proof that the Applicant Completed Public Notice

Proof of Notice

Within 15 days of completion of the public notice requirements above, the applicant must submit proof of notice to NMED. Depending on the option selected, proof of notice may include list of property owners' names and addresses, copies of certified mail return receipts, a copy of the published display ad indicating the newspaper and date of publication, and an affidavit of sign posting. If the department determines that the notice provided is inadequate, the department may require additional notice in accordance with the requirements above.

Important Definitions

The following definitions are excerpted from the Water Quality Control Commission regulations, 20.6.2 NMAC.

> **"adjacent properties"** means properties that are contiguous to the discharge site or property that would be contiguous to the discharge site but for being separated by a public or private right of way, including roads and highways.
>
> **"discharge site"** means the entire site where the discharge and associated activities will take place.
>
> **"owner of record"** means an owner of property according to the property records of the tax assessor in the county in which the discharge site is located.

Frequently Asked Questions

Where can I get a copy of the new public notice regulations?
The Water Quality Control Commission Regulations are available on the New Mexico Environment Department's (NMED) internet web site. The web site address is:

www.nmenv.state.nm.us

Click on the heading "Environmental Protection Regulations", then "Water Quality-- Ground and Surface Water Protection". The public notice regulations are in Section 20.6.2.3108 NMAC.

You can also call the Ground Water Quality Bureau at (505) 827-2900 and we will mail you a copy of the regulations.

When do the new public notice regulations go into effect?
September 15, 2002

Do the new public notice regulations apply to me?
The regulations apply to all applications for new permits, renewals, and modifications that are submitted to NMED on or after September 15, 2002. Page 3 of the application has a section for the applicant to select one of three public notice options. If you submitted an application for a new discharge permit, renewal or modification before September 15, 2002, then the regulations will not apply to you until you renew or modify your permit, even if your permit has not yet been issued.

Where at my facility should the sign be posted?
In many cases the sign should be posted in a location near the front entrance to the facility where it is likely to be seen by passersby. Other conspicuous public locations can be approved in advance by the Ground Water Quality Bureau if they are more likely to provide notice to the public. You can contact the Ground Quality Bureau at the number below to obtain approval for an alternate sign posting location.

Where do I get the sign that will be posted at my facility?
When the NMED receives the application and deems it administratively complete, we will send the applicant the instructions and a laminated poster with an invoice for $15.00.

How long do I have to keep the sign up at my facility?
The sign must be posted for 30 days.

What properties are considered to be "adjacent" to my property?
"Adjacent properties" are those properties that are contiguous to the discharge site or that would be contiguous to the discharge site except for being separated by a public or private right of way, including roads and highways.

Who are property "owners of record" and where can I find their names and addresses?
An "owner of record" is an owner of property according to the property records of the tax assessor in the county in which the discharge site is located. You can call your county tax assessor and they can, in most cases, provide names and addresses of owners of record within 24 hours. You will need to provide the tax assessor with the location of your discharge site and ask for names and addresses of adjacent properties.

Is there a letter format I should use for the direct notice to property owners?
When the NMED receives the application and deems it administratively complete, we will send the applicant the instructions and materials necessary to provide direct notice to property owners.

What if there are no adjacent properties other than properties I own?
If the applicant owns the adjacent properties, then they must implement Option 2 by posting a sign, placing a display ad and notifying the property owner if the owner is different from the applicant.

Is there a required format for the display advertisement?
When the NMED receives the application and deems it administratively complete, we will send the applicant the instructions and materials necessary to place a display advertisement.

What proof must I provide to the NMED to demonstrate that I provided public notice in accordance with the new regulations?
Within 15 days of completion of the public notice requirements, the applicant must submit proof of notice to NMED. Depending on the option selected, proof of notice may include a list of property owners' names and addresses, copies of certified mail return receipts, a copy of the published display ad indicating the newspaper and date of publication, and a signed affidavit that the sign was posted. If the department determines that the notice provided is inadequate, the department may require additional notice in accordance with the new regulations.

Who do I contact if I have additional questions?
You may contact Jerry Schoeppner, Chief of the Ground Water Quality Bureau or Maura Hanning, Manager of the Ground Water Pollution Prevention Section at (505) 827-2900.

ATTACHMENTS

ATTACHMENT A: NEF DETAILED SITE MAP

ATTACHMENT B: METHODS USED TO CALCULATE DISCHARGE VOLUMES

ATTACHMENT C: SITE GEOLOGIC REPORT

ATTACHMENT D: DESCRIPTION OF LIQUID EFFLUENT COLLECTION TREATMENT SYSTEM

ATTACHMENT E: MONITORING PLAN

ATTACHMENT F: SAMPLING PROTOCOL

ATTACHMENT G: NEF AREA MAP

ATTACHMENT H: NEF ROAD MAP

ATTACHMENT I: FEMA FLOOD INFORMATION

ATTACHMENT J: NEF SITE SOILS MAP

ATTACHMENT K: NEI LAND EASEMENT AND LAND USE RESTRICTION

ATTACHMENT A

NEF DETAILED SITE MAP

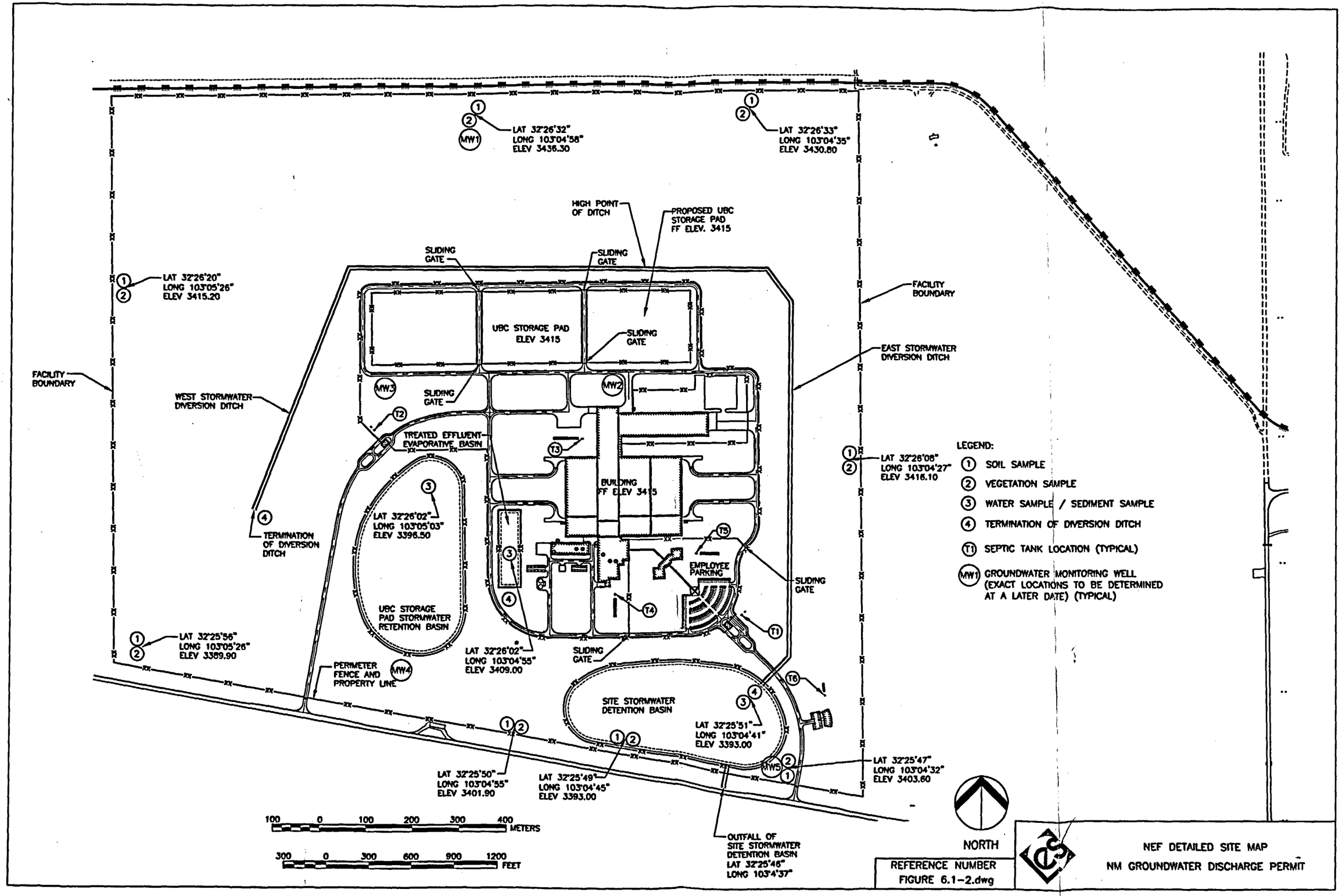
LAT 32°26'32"
LONG 103°04'58"
ELEV 3436.30
MW1
LAT 32°26'33"
LONG 103°04'35"
ELEV 3430.80
HIGH POINT OF DITCH
PROPOSED UBC STORAGE PAD FF ELEV. 3415
SLIDING GATE
SLIDING GATE
LAT 32°26'20"
LONG 103°05'26"
ELEV 3415.20
FACILITY BOUNDARY
UBC STORAGE PAD ELEV 3415
SLIDING GATE
EAST STORMWATER DIVERSION DITCH
FACILITY BOUNDARY
WEST STORMWATER DIVERSION DITCH
MW3
SLIDING GATE
MW2
T2
TREATED EFFLUENT EVAPORATIVE BASIN
T3
BUILDING FF ELEV 3415
LAT 32°26'08"
LONG 103°04'27"
ELEV 3416.10
LEGEND:
1 SOIL SAMPLE
2 VEGETATION SAMPLE
3 WATER SAMPLE / SEDIMENT SAMPLE
4 TERMINATION OF DIVERSION DITCH
T1 SEPTIC TANK LOCATION (TYPICAL)
MW1 GROUNDWATER MONITORING WELL (EXACT LOCATIONS TO BE DETERMINED AT A LATER DATE) (TYPICAL)
LAT 32°26'02"
LONG 103°05'03"
ELEV 3396.50
TERMINATION OF DIVERSION DITCH
T5
EMPLOYEE PARKING
SLIDING GATE
T4
T1
UBC STORAGE PAD STORMWATER RETENTION BASIN
LAT 32°25'56"
LONG 103°05'26"
ELEV 3389.90
LAT 32°26'02"
LONG 103°04'55"
ELEV 3409.00
SLIDING GATE
PERIMETER FENCE AND PROPERTY LINE
MW4
T6
SITE STORMWATER DETENTION BASIN
LAT 32°25'51"
LONG 103°04'41"
ELEV 3393.00
MW5
LAT 32°25'47"
LONG 103°04'32"
ELEV 3403.60
LAT 32°25'50"
LONG 103°04'55"
ELEV 3401.90
LAT 32°25'49"
LONG 103°04'45"
ELEV 3393.00
100 0 100 200 300 400 METERS
300 0 300 600 900 1200 FEET
OUTFALL OF SITE STORMWATER DETENTION BASIN
LAT 32°25'46"
LONG 103°4'37"
NORTH
REFERENCE NUMBER
FIGURE 6.1-2.dwg
NEF DETAILED SITE MAP
NM GROUNDWATER DISCHARGE PERMIT

ATTACHMENT B

METHODS USED TO CALCULATE DISCHARGE VOLUMES

ATTACHMENT B
Methods Used to Calculate Discharge Volumes

Peak Discharge Flows

For runoff calculations to the SSDB and USPSRB, peak discharge volumes are based on the 24-hr, 100-yr rainfall of 6 inches times the runoff area. For the USPSRB, the two blowdown components were also added to yield a total peak discharge.

For the TEEB, peak discharge volume is the maximum estimated discharge from the Liquid Effluent Collection and Treatment System in a single day.

Peak discharge into the site septic systems is based on the design capacity serving 422 employees.

Average Discharge Flows

For runoff calculations to the SSDB and USPSRB, average discharge volumes are based on the annual rainfall of 14 inches (1.17 feet) evenly distributed throughout the year times the runoff area. For the USPSRB, the two blowdown components were also added to yield a total average discharge.

For the TEEB, average discharge volume is the average daily discharge from the Liquid Effluent Collection and Treatment System.

Average discharge into the site septic systems is based on the actual staff of NEF which is based on an employee count of 210.

Peak and average discharge flows into the three basins are summarized in the attached two sheets.

Peak Discharge Flows

Location	Source	Rainfall Depth (ft)	Runoff Area (acres)	Total Flow (acre-ft/day)	Total Flow (gpd)
SSDB Total	Rainfall Runoff 24-hr,100-yr Storm	0.5	95.6	47.8	15,574,617
USPSRB	Rainfall Runoff 24-hr, 100-yr Storm	0.5	22.8	11.4	3,714,448
				Total Flow (gpy)	
	Cooling Tower Blowdown			5,051,845	13,841
	Boiler Blowdown			36,500.00	100
USPSRB Total					3,728,389
TEEB	Process discharge flow				5,350
TEEB Total					5,350

Average Discharge Flows

Location		Rainfall Depth (ft)	Runoff Area (acres)	Total Flow (acre-ft/year)	Total Flow (gpd)
SSDB Total	Annual Rainfall	1.17	95.6	111.9	99,848
USPSRB	Annual Rainfall	1.17	22.8	26.7	23,813
				Total Flow (gpy)	
	Cooling Tower Blowdown			5,051,845	13,841
	Boiler Blowdown			36,500	100
USPSRB Total					37,754
TEEB	Process discharge flow			669,884	1,835
TEEB Total					1,835

ATTACHMENT C

SITE GEOLOGIC REPORT

COOK-JOYCE INC.
ENGINEERING AND CONSULTING
812 WEST ELEVENTH
AUSTIN, TEXAS 78701-2000
(512) 474-9097 FAX (512) 474-8463

HYDROGEOLOGIC INVESTIGATION

SECTION 32; TOWNSHIP 21 RANGE 38
Eunice, New Mexico

19 NOVEMBER 2003

Prepared for:

Lockwood Greene Engineering & Construction
1500 International Drive
Spartanburg, South Carolina 29304

LOCKWOODGREENE\FINAL\03070
R031119_REPORT.DOC

TABLE OF CONTENTS

SECTION		PAGE
1.0	INTRODUCTION	1
1.1	Site Description	1
1.2	Adjacent properties	1
2.0	HYDROGEOLOGIC INVESTIGATION FIELD ACTIVITIES	3
2.1	General Geologic Conditions	3
2.2	Shallow subsurface investigation	4
2.3	Deep subsurface investigation	4
2.3.1	Geophysical Borings	5
2.3.2	Monitor Well Drilling and Installation Program	5
2.4	Survey Data	6
2.5	Groundwater Level Data Collection	6
2.6	Groundwater Sampling	7
3.0	DATA ANALYSIS	8
4.0	CONCLUSIONS	9

LIST OF TABLES

TABLE	
1	Shallow Borehole Data
2	Groundwater Level Data

LIST OF FIGURES

FIGURE	
1	Site Location Map
2	Adjacent Property Location Map
3	Boring Location Map
4	Redbed Contact Structure Map
5	Groundwater Gradient

LIST OF APPENDICES

APPENDIX	
A	Geologic Boring Logs
B	Summary of Field Activities
C	Geophysical Boring Logs
D	Monitor Well Construction Diagrams
E	Hydraulic Conductivity Calculations
F	Groundwater Velocity Calculations
G	Survey Results

1.0 INTRODUCTION

In accordance with the Scope-of-Services outlined in a letter from Cook-Joyce, Inc. (CJI) dated 19 August 2003, CJI was contracted by Lockwood-Greene Engineering and Construction (LG) to conduct a hydrogeologic investigation of an undeveloped property in southeastern New Mexico. The hydrogeologic investigation was conducted on behalf of Louisiana Energy Services' efforts to license and operate a uranium enrichment facility at this site. The following sections detail CJI investigational activities at the site.

1.1 SITE DESCRIPTION

The approximate 560-acre site is located 2 miles east of Highway 18 in Eunice, Lea County, New Mexico, as shown on the Site Location Map (Figure 1). The property includes the portion of Section 32, Township 21, and Range 38 of the New Mexico State grid system that lies north of New Mexico State Highway 234, which runs east and west across the southern portion of Section 32. There are no permanent structures on-site. Currently the property is used for cattle grazing.

The site is characterized by sandy topsoil, sparse vegetation including mesquite trees, some rolling sand dunes, and about 30 feet of topographic relief from north to south. Although there are numerous operational oil wells within close proximity to the site, there are none on the subject property. There are three man-made features on-site. The first is a gravel road that trends north-south near the center of the site. The road is primarily used by haul trucks entering and exiting an adjacent surface mine facility that is located north of the site. The second man-made feature is a gravel pad approximately 200' x 300' that was constructed in early September during field activities. The third feature is an underground carbon dioxide gas pipeline that is operated by Trinity Pipeline and crosses the site from approximately the northwest corner to the southeast corner of the property.

1.2 ADJACENT PROPERTIES

There are several industrial developments within relatively close proximity to the site (see Figure 2). The site is bordered to the north by a railroad spur that operates between the town of

Eunice and Waste Control Specialists, LLC (WCS). WCS operates a permitted RCRA landfill and waste storage and processing facilities, and specializes in hazardous and low-level nuclear waste at their facility. The WCS facility, which is located just across the border in the State of Texas, is located within about one-half mile east/northeast of the eastern-most portion of the subject property. WCS also owns the adjacent undeveloped property to the east (Section 33), between Section 32 and the WCS facility.

The Lea County Municipal Landfill is located immediately south of State Highway 234 near the southeast corner of the subject property. With the exception of the Lea County Municipal Landfill and a few oil wells, adjacent property south of State Highway 234 is undeveloped. Although primarily undeveloped property borders the site to the west, there is a landfarm in operation within about one-half mile of the western boundary of the subject site. Though not thoroughly investigated as a part of this project, the D & D Landfarm appears to remediate soil from off-site sources that may have been affected by oil exploration processes.

There are two industrial facilities located about one-quarter mile north of the subject property. The two facilities are Wallach Gravel Quarry and Sundown. Wallach has operated a surface mining operation on their property since about the 1950's. Sundown operates an oil recovery/recycling facility which includes a sludge pond and an oil storage tank farm that is used to store oil and sludge recovered from oil exploration processes.

In addition to the active facilities located in the area of the site, an abandoned sand and gravel quarry is located to northeast of the site on WCS property and which is referred to on USGS maps as Baker Spring.

2.0 HYDROGEOLOGIC INVESTIGATION FIELD ACTIVITIES

On 25 August 2003, CJI personnel mobilized to the site to conduct field activities related to the hydrogeologic investigation. The field activities were conducted to collect data to identify and characterize the hydrogeologic conditions of the uppermost water-bearing zone beneath the site. The investigation consisted of the installation of nine borings to the top of the redbed to determine: a) the depth to the redbed, and b) if shallow groundwater is present in the overlying sand unit. Because groundwater was not located in the shallow sand unit, three additional monitor wells were installed into a silty sand unit in the redbeds at an approximate depth of 240 feet below ground level (bgl). These three monitor wells were gauged to evaluate if groundwater was present. Only one of the three wells produced groundwater. Groundwater samples were collected from this monitor well. Detailed field activities are described in Appendix B.

2.1 GENERAL GEOLOGIC CONDITIONS

Prior to initiation of the field investigation, the general hydrogeologic conditions were evaluated. The data reviewed were obtained from past investigations of the WCS property, the Lea County Landfill, and pedestrian surveys of the Wallach sand and gravel operation to the north. The area is underlain with approximately 25 to 50 feet of primarily unconsolidated sand with thin to medium lenses of gravel. Perched or localized pockets of groundwater in this unit were identified as being present to the north of the site in the Wallach mining excavation and to the east in some piezometers located on the WCS property.

The sand unit is underlain by the Triassic aged Dockum Group or redbeds. The redbed consist primarily of a clay mudstone that is interbedded with silt and sandstone zones. Laterally consistent silt and sandstone zones have been identified at depths of approximately 125 feet and 230 feet below ground level (bgl). In addition, a discontinuous silt zone at approximately 180 feet BGL has been identified in past investigations of the WCS property. Groundwater has not been identified in the 125-foot silty sandstone zone. Groundwater in the 180-foot zone is present at some locations but not continuously across the WCS property. Groundwater is present in a 230-foot zone across the entire portion of the WCS property that has been investigated.

2.2 SHALLOW SUBSURFACE INVESTIGATION

Prior to mobilizing to the site, nine proposed boring locations based on a 1,00-foot center grid pattern were overlain on an USGS-based site map (see Figure 3) and the associated coordinates for each of these boring locations was ascertained. On 25 August 2003, CJI personnel conducted a walking survey of the majority of the site while the predetermined boring locations were staked. Boring locations were located using a hand-held GPS unit. With the exception of B-1, each boring location was staked as close to the predetermined coordinates as possible. Due to the presence of sand dunes, it was necessary to field-locate B-1 about 75' northwest of its mapped location.

Nine borings, B-1 through B-9, were installed and geologically logged to the geological contact of the "redbeds". The borings were drilled using solid and hollow stem augers and the borings were geologically logged from the cuttings. The boring logs are presented in Appendix A. The borings ranged in depth from 35 feet to 60 feet. The depth and elevation of the redbed in each of the borings is shown in Table 1. Once the borings were advanced to the contact, the boreholes were then allowed to remain open for a minimum of 24 hours to determine if shallow groundwater was present.

The upper unit was typically described as a dry, red and gray, silty sand with some gravel and gravel layers present. The borings were gauged for a minimum period of 24 hours and groundwater was not identified in any of the nine borings. Following the gauging period, the borings were backfilled with cuttings from the drilling operations.

2.3 DEEP SUBSURFACE INVESTIGATION

Upon completion of the shallow subsurface investigation, an investigation of the underlying strata was conducted for the purpose of identifying the uppermost water-bearing zone at the expected depth of 230 feet bgl. This portion of the investigation consisted of the installation of three test borings to define the interval of the suspected 230-foot uppermost groundwater-bearing zone. Once the subsurface geologic data were obtained through geophysical logs, these data were used to design three monitor wells (MWs) near B-1, B-7, and B-9. A summary of the field activities is presented in Appendix B.

2.3.1 Geophysical Borings

Three test borings were drilled with air rotary method to a depth of 250 feet bgl without the collection of soil or core samples. The borings were filled with water from a supply well on the WCS property that is completed into the Santa Rosa formation of the Dockum Group. CJI personnel then geophysically logged the borings. The three test boreholes (B-3, B-7, and B-9) were logged for resistivity using a Mineral Logging Systems unit 1502-282. The geophysical logs of the three test boreholes can be found in Appendix C of this report.

The geophysical logs indicate that more resistive zones, which are indicative of zones of higher sand and silt content than the baseline clay zones, are located at approximate depths of 100 feet and 225 feet BGL in each of the three borings. A discontinuous resistive zone, at an approximate depth of 185 feet BGL, was also detected in Borings B-3 and B-9, but not in B-7.

2.3.2 Monitor Well Drilling and Installation Program

The three monitor wells were designed based on the results of the geophysical logs. The design consisted of the placement of the screened interval across the 230-foot zone that is approximately 15 feet in thickness. A sand filter pack was placed in the annular space around the screen and extended a minimum of 3 feet above the screen. Well centralizers were placed approximately every 50 feet along the well casing to prevent the well from contacting the borehole wall to ensure a proper filter pack and well seal. Above the sand filter pack, bentonite chips were placed to seal the screened interval from potential infiltration from above. The bentonite chips were placed to a depth of 75 feet bgl. A cement-bentonite grout was placed above the bentonite chip seal. Monitor Well Completion Diagrams for each of the wells are presented in Appendix D.

The wells were completed at the surface with 4-inch square steel box tubing with a lockable cap and a 4-foot square concrete pad. Cattle panels were placed around the wells to help prevent livestock from damaging the wells. A detailed summary of the monitor well drilling and construction activities is included in Appendix B.

2.4 SURVEY DATA

A survey of the locations and elevations of the 9 borings and 3 monitor wells was conducted by Pettigrew and Associates, a Registered Professional Surveyor. In addition, top-of-casing elevation and top of concrete pad elevation data were collected at each of the monitor wells. The results of these data are shown on the boring logs and the Monitor Well Construction Diagrams and a report of the survey results are presented in Appendix G. The boring and monitor well surveyed locations are shown on Figure 3.

2.5 GROUNDWATER LEVEL DATA COLLECTION

On 22 September, CJI began collecting groundwater elevation data from MW-1, MW-2, and MW-3 to evaluate groundwater recharge in the screened interval. Measurements were collected using an electric e-line that records to 0.01 foot. The results of the groundwater level data are presented on Table 2.

Groundwater was present in Monitor Well MW-2 but Monitor Wells MW-1 and MW-3 did not produce groundwater. Groundwater levels continued to recharge in MW-2 throughout the monitoring period.

Due to the lack of groundwater in Monitor Wells MW-1 and MW-3, deionized water was placed in the wells. The wells were surged in an attempt to remove any smearing of the borehole walls that might have been present and that could have prevented the well from producing groundwater. The wells were surged a total of five times over a five day period using a surge block that forced water to move back and forth through the borehole wall to remove any fines that may have caused smearing. Water levels were recorded for a three-week period after surging. The water level in MW-1 remained relatively constant and the water level in MW-3 fell during the monitoring period, which would indicate that the screened intervals in these two wells are dry.

2.6 GROUNDWATER SAMPLING

Groundwater samples were collected from Monitor Well MW-2. Lockwood Greene coordinated the delivery of the sample containers and determined the parameters to be analyzed for the sampling events. Severn Trent Laboratories (STL) and Framatome supplied the sample containers. Two groundwater sampling events were conducted. Due to the short holding times of some of the parameters, each of the sampling events was conducted over a two day period. Samples were collected on 14 October 2003 and 11 November 2003 for the containers supplied by STL. Samples were collected on 19 October 2003 and 12 November 2003 for the containers supplied by Framatome.

Because groundwater had not reached equilibrium in MW-2 prior to each sampling event, the available groundwater in the well had not stagnated and therefore purging was not conducted prior to sampling. The samples were collected using new dedicated disposable 2-inch diameter bailers. The samples were placed in the laboratory supplied containers and placed on ice for next day delivery to the laboratories. The samples were transported under standard chain-of-custody procedures. During the sampling activities, the sampling team donned latex gloves to prevent cross contamination.

3.0 DATA ANALYSIS

The data collected from the field investigation activities and from past investigations on the WCS property to the east have been used to develop a general model of the site characteristics. The model includes a top of redbed contour map, a hydraulic gradient map of groundwater in the 230-foot zone, and a hydraulic conductivity calculation of the 230-foot zone.

The top of redbed structure map is presented as Figure 4. The top of red bed represents the paleogeographic surface of this unit prior to being covered by the overburden sand and silt material that extends to the current land surface. Based on the structure map there is a northwest-southeast trending ridge in the redbed that is located to the northeast of the subject site. Along the southwest toe of this ridge appears to be a top of redbed drainage that slopes to the south. To the east of the subject site in Section 33, the redbeds generally slope towards this drainage feature. Beneath the site, the drainage feature generally slopes to the southwest corner of the property in an east to west drainage feature. This drainage feature has relief of approximately 40 feet.

A groundwater gradient map from wells completed in the 230-foot zone on the WCS site has been extended to include the groundwater elevation data from Monitor Well MW-2. The groundwater gradient map is presented as Figure 6. The gradient is shown to be in a south-southwesterly direction on the WCS site and appears to be in a south-southeasterly direction in the area of MW-2 on the LES property. The gradient in the area of MW-2 is approximately 0.011 feet per foot.

Based on recovery rates of groundwater in Monitor Well MW-2, the hydraulic conductivity of the 230-foot zone has been calculated at 3.7×10^{-6} cm/sec (3.8 feet/year). The hydraulic conductivity was calculated using Hvorslev's rising head slug test method. The hydraulic conductivity calculations are presented in Appendix E.

Using the calculated groundwater gradient and the hydraulic conductivity value, the groundwater velocity has been calculated to be 0.3 feet per year. The calculation of groundwater velocity is presented in Appendix F. It should be noted that the porosity value used in the calculation was developed from laboratory analysis of soil samples collected from this zone from the WCS site.

4.0 CONCLUSIONS

Based on the field activities and data collected to date, the following conclusions have been made:

- The surface soils at the site consist mainly of fine sand and silt. There are minimal amounts of gravel in certain zones but gravel is not consistently present throughout the site;

- The upper geologic contact of the redbeds, in boreholes B-1 through B-9, is found between 23' BGL and 46' BGL. The red bed surface is a paleogeographic surface that slopes towards the southwest corner of the property;

- Shallow groundwater was not detected above the redbeds in boreholes B-1 through B-9;

- The 230-zone, that is believed to correspond with the water-bearing zone that WCS is monitoring, is found to be approximately 15 feet thick and was encountered at depths ranging from 214 feet to 222 feet BGL;

- Based on interpretation of on-site and off-site data the groundwater gradient in the 230-foot zone is approximately 0.011 feet per foot to the south-southeast beneath the area of investigation;

- The hydraulic conductivity of the 230-foot zone has been calculated to be 3.7×10^{-6} cm/sec; and

- The velocity of the groundwater flow is approximately 0.3 feet per year.

TABLES

TABLE 1
SHALLOW BORHOLE SURVEY DATA
Lockwood Greene Engineering and Construction
Eunice, New Mexico

Boring	Surface Elevation (feet MSL)	Depth to Redbed (feet MSL)	Elevation at Top of Redbed (feet MSL)
B-1	3,396	55	3,341
B-2	3,402	34	3,368
B-3	3,403	23	3,380
B-4	3,401	45	3,356
B-5	3,409	43	3,366
B-6	3,415	45	3,370
B-7	3,415	26	3,389
B-8	3,423	38	3,385
B-9	3,421	46	3,375

TABLE 2
GROUNDWATER LEVEL DATA
Lockwood Greene Engineering and Construction
Eunice, New Mexico

Monitor Well MW-1	
DATE	DTW TOC
9/22/03	dry
9/23/03	dry
9/24/03	dry
9/25/03	dry
9/26/03	dry
9/29/03	dry
9/30/03	dry
10/1/03	dry
10/2/03	dry
10/3/03	dry
10/6/03	dry
10/7/03	dry
10/8/03	dry
10/9/03	dry
10/10/03	dry
10/13/03	dry
10/14/03	dry
10/15/03	dry
10/16/03	212.1
10/17/03	215.02
10/18/03	215.03
10/19/03	214.56
10/20/03	214.52
10/22/03	214.43
10/24/03	214.32
10/27/03	214.35
11/4/03	214.37
11/7/03	214.4
11/10/03	214.36
11/11/03	N/A
11/12/03	N/A

Monitor Well MW-2	
DATE	DTW TOC
9/22/03	190.78
9/23/03	165.04
9/24/03	153.85
9/25/03	149.68
9/26/03	148.67
9/29/03	138.71
9/30/03	135.11
10/1/03	164.07
10/2/03	149.14
10/3/03	142.58
10/6/03	145.03
10/7/03	138.11
10/8/03	140.64
10/9/03	136.9
10/10/03	133.68
10/13/03	N/A
10/14/03	140.53
10/15/03	165.48
10/16/03	148.52
10/17/03	141.86
10/18/03	N/A
10/19/03	133.55
10/20/03	147.56
10/22/03	130.79
10/24/03	125.54
10/27/03	120.33
11/4/03	115.84
11/7/03	115.02
11/10/03	114.91
11/11/03	114.24
11/12/03	121.82

Monitor Well MW-3	
DATE	DTW TOC
9/22/03	dry
9/23/03	dry
9/24/03	dry
9/25/03	dry
9/26/03	dry
9/29/03	dry
9/30/03	dry
10/1/03	dry
10/2/03	dry
10/3/03	dry
10/6/03	dry
10/7/03	dry
10/8/03	dry
10/9/03	dry
10/10/03	dry
10/13/03	dry
10/14/03	dry
10/15/03	dry
10/16/03	220.36
10/17/03	224.37
10/18/03	224.58
10/19/03	224.73
10/20/03	224.79
10/22/03	224.98
10/24/03	225.23
10/27/03	225.5
11/4/03	228.14
11/7/03	228.31
11/10/03	226.58
11/11/03	N/A
11/12/03	N/A

DTWTOC - Depth to water from top of casing.
Monitor Well MW-2 was developed on 9/30, 10/2, 10/7, 10/8, and 10/10.
Groundwater samples were collected from MW-2 on 10/14, 10/15, 10/19, 11/11, and 11/12.
Monitor Wells MW-1 and MW-3 were surged five times using 12 to 13 gallons of DI water from 10/16 - 10/20.

FIGURES

N
3000 1500 0 3000
(SCALE IN FEET)
LEGEND
LES SITE
LES SITE
Windmill
REV. DATE DESCRIPTION DR BY APP BY
COOK-JOYCE INC.
ENGINEERING AND CONSULTING
812 WEST ELEVENTH 512-474-9097
AUSTIN, TEXAS 78701
PROJECT:
LOCKWOOD GREENE
SHEET TITLE:
SITE LOCATION MAP
DES BY
DR BY SDB
CHK BY DHG
APP BY DHG
DATE ISSUED: 11-19-2003
PURPOSE: REPORT
SCALE: SEE BAR SCALE
PROJECT NO. 03070
C-J NO. 03070007
SHEET 1 OF 1 SHEETS
FIGURE NO.
1

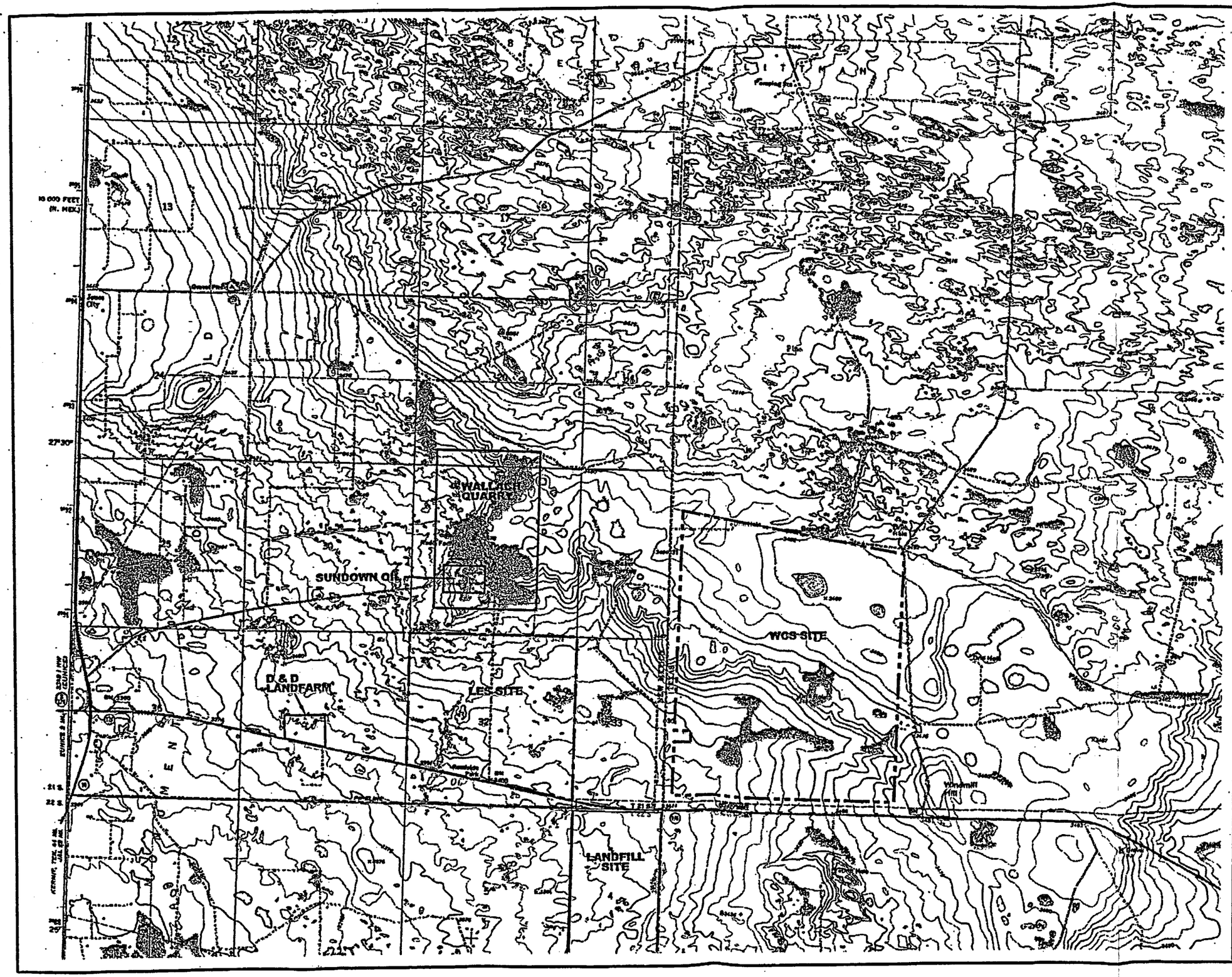

REV.	DATE	DESCRIPTION	DR BY	APP BY

COOK-JOYCE INC.
ENGINEERING AND CONSULTING
812 WEST ELEVENTH 512-474-8097
AUSTIN, TEXAS 78701

PROJECT: LOCKWOOD GREENE

SHEET TITLE: LAND USE MAP

DES BY			SCALE: SEE BAR SCALE
DR BY	SDB	SDB	PROJECT NO. 03070
CHK BY	DHG	DHG	C/I NO. 03070008
APP BY	DHG	DHG	SHEET 1 OF 1 SHEETS
DATE ISSUED: 11-19-2003			FIGURE NO. 2
PURPOSE: REPORT			

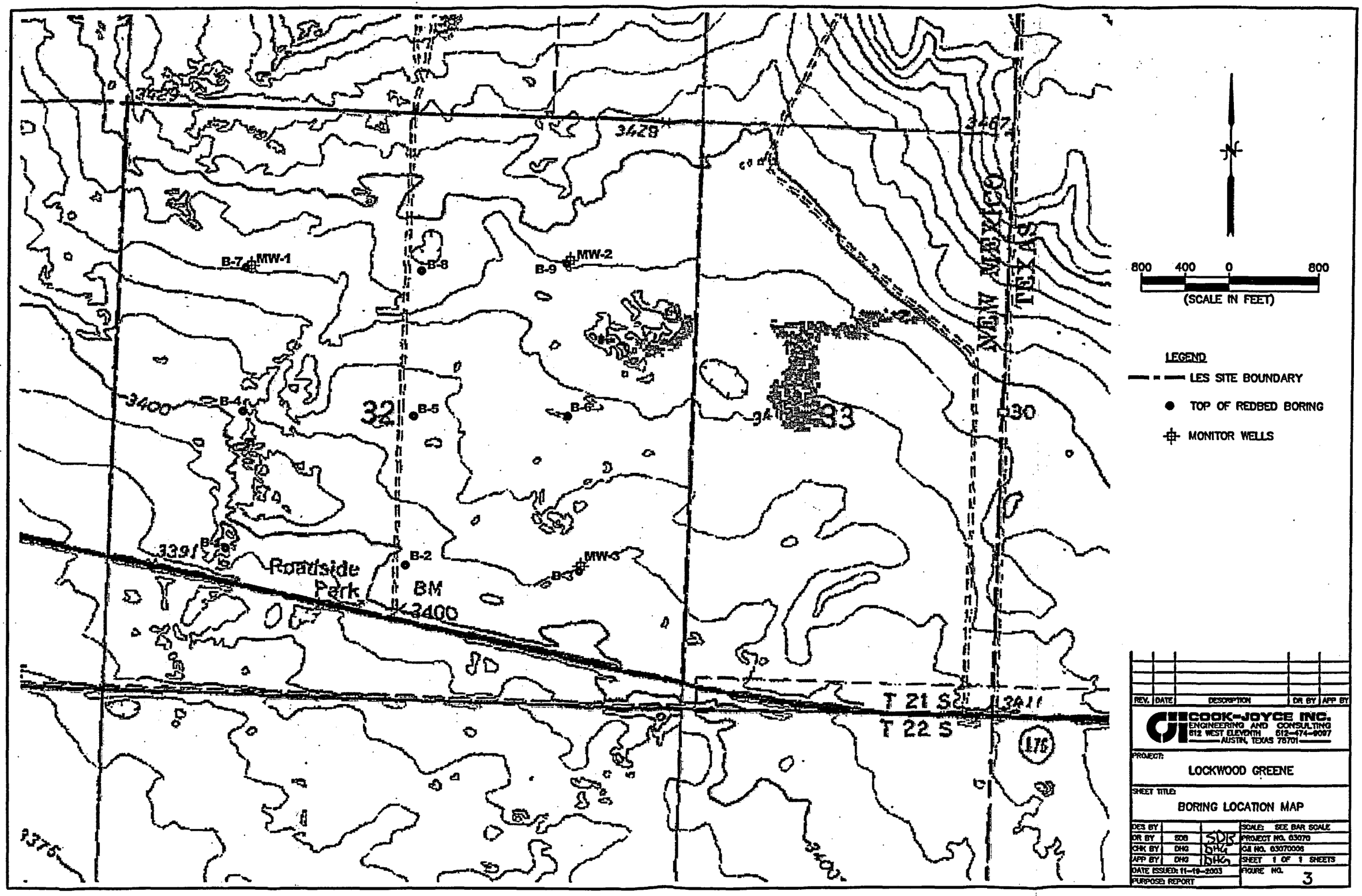
3429
3428
3427
B-7
MW-1
B-8
B-9
MW-2
B-4
B-5
B-6
32
33
30
3400
3391
B-3
B-2
MW-3
Roadside Park
BM 3400
T 21 S
T 22 S
3411
176
3375
NEW MEXICO
TEXAS
800 400 0 800
(SCALE IN FEET)
LEGEND
LES SITE BOUNDARY
TOP OF REDBED BORING
MONITOR WELLS
REV. DATE DESCRIPTION DR BY APP BY
COOK-JOYCE INC.
ENGINEERING AND CONSULTING
812 WEST ELEVENTH 512-474-9097
AUSTIN, TEXAS 78701
PROJECT:
LOCKWOOD GREENE
SHEET TITLE:
BORING LOCATION MAP
DES BY
DR BY SDB SDB
CHK BY DHG DHG
APP BY DHG DHG
DATE ISSUED: 11-19-2003
PURPOSE: REPORT
SCALE: SEE BAR SCALE
PROJECT NO. 03070
CJI NO. 03070006
SHEET 1 OF 1 SHEETS
FIGURE NO. 3

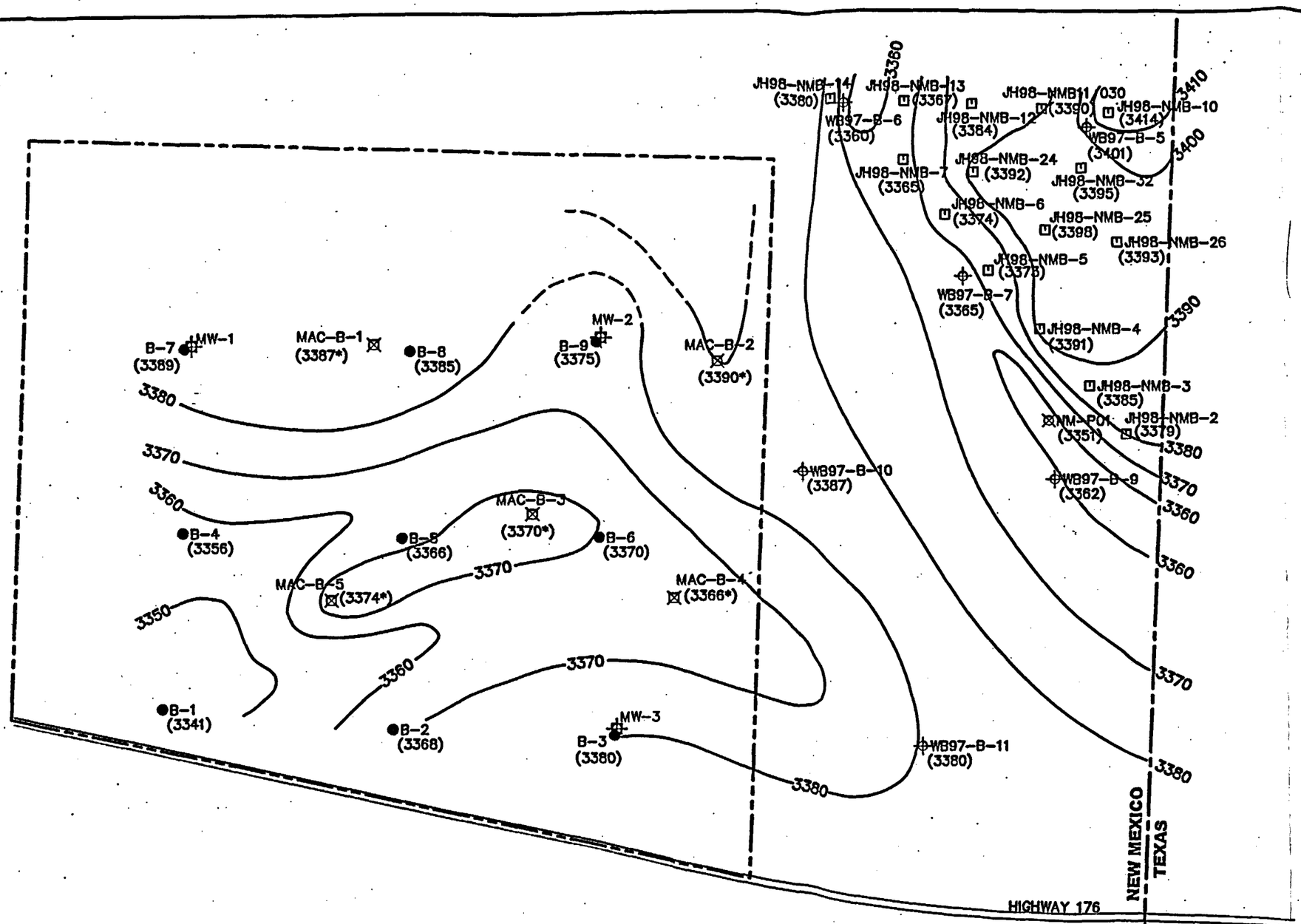

NOTE:

* ELEVATION IS A REASONABLE INTERPRETATION OF GEOLOGIC CONTACT AND IS CONSIDERED TO BE ACCURATE TO ±2 FEET.

** COPIES OF BORING LOGS FOR MACTEC BORINGS (MAC-B-1 THRU MAC-B-5) INCLUDED IN APPENDIX A OF THIS REPORT.

REV.	DATE	DESCRIPTION	DR BY	APP BY

COOK-JOYCE INC.
ENGINEERING AND CONSULTING
812 WEST ELEVENTH 512-474-9097
AUSTIN, TEXAS 78701

PROJECT: LOCKWOOD GREENE

SHEET TITLE: TOP OF RED BED STRUCTURE MAP

DES BY			SCALE: SEE BAR SCALE
DR BY	SDB		PROJECT NO. 03070
CHK BY	EEH	EEH	CJI NO. 03070004
APP BY	DHG	DHG	SHEET 1 OF 1 SHEETS
DATE ISSUED: 11-10-2003			FIGURE NO. 4
PURPOSE: REPORT			

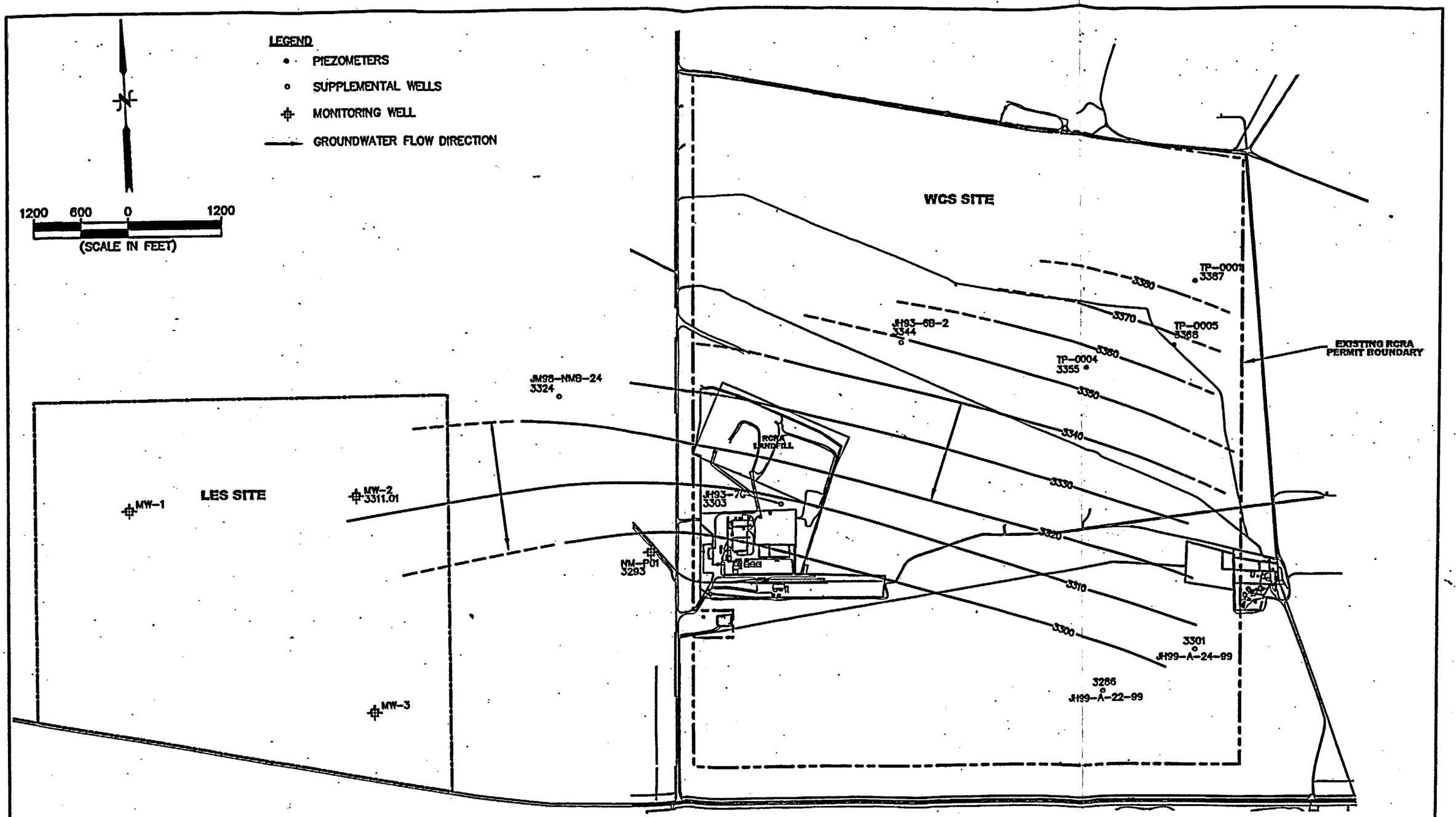

REV.	DATE	DESCRIPTION	DR BY	APP BY

COOK+JOYCE INC.
ENGINEERING AND CONSULTING
812 WEST ELEVENTH 512-474-9087
AUSTIN, TEXAS 78701

PROJECT:
LOCKWOOD GREENE
SITE INVESTIGATION

SHEET TITLE: 2003 FALL
230-FOOT ZONE
GROUNDWATER GRADIENT CONTOURS

DES BY	DHG	DHG	SCALE: SEE BAR SCALE
DR BY	SDB	SDB	PROJECT NO. 03070
CHK BY	MAS		CJI NO. 03070005
APP BY	DHG	DHG	SHEETS 1 OF 1 SHEETS
DATE ISSUED: 11-19-2003			FIGURE NO. 5
PURPOSE: REPORT			

APPENDIX A

LITHOLOGIC LOGS

LOG OF BORING NO. B-1

Lockwood Greene Engineering and Construction

TYPE: 6" Flight Augers

LOCATION: Eunice, N.M.

N 522,969.2 E 925,623.0 El 3396.49

DEPTH, FT	SYMBOL	SAMPLES	BLOWS PER FOOT OR REC/(RQD), %	STRATUM DESCRIPTION	LAYER ELEV./ DEPTH
				Fine sand with silt - very loose, very dry, red, (SM).	
5					
10					
					3381.5
15				Fine sand with silt and gravel (<1/2" Dia.) - very dry, red and gray, (SW).	15.0
20					
25					
30				Fine sand with silt and gravel (<1-1/2" Dia) - very dry, gray and red, (SW).	
35					
40				Fine sand with silt and abundant gravel (<1-1/2" Dia.) - very dry, red, (SW).	
45					
50					
					3341.5
55				Top of red bed, silty clay - very dry, red, (CL).	55.0
					3336.5
60				TD-60'	60.0

COMPLETION DEPTH: 60.0'

DATE: 8-28-03 PROJECT NO.: 03070

COOK-JOYCE INC.
ENGINEERING AND CONSULTING
812 WEST ELEVENTH
AUSTIN, TEXAS 78701-2000
(512)474-8097 FAX (512)474-8483

GEOTA 03070 11-17-03

LOG OF BORING NO. B-2

Lockwood Greene Engineering and Construction

TYPE: 8" Hollow-Stems LOCATION: Eunice, N.M.

N 522,906.4 E 927,284.7 El 3402.31

DEPTH, FT	SYMBOL	SAMPLES	BLOWS PER FOOT OR REC/(RQD), %	STRATUM DESCRIPTION	LAYER ELEV./ DEPTH
				Fine sand with silt and gravel (<1/2" Dia.) - very loose, very dry, tan, (SW).	
5				Fine sand with silt and gravel (<1/2" Dia.) - very loose, very dry, red, (SW).	
10					
15				Fine sand with silt and gravel (<1/2" Dia.) - very dry, gray and red, (SW). Gravel layer from 15.5' - 16.5'	
20					
25					
30					3368.3
35				Top of red bed, silty clay - very dry, red, some chert present, (CL).	34.0
40				TD=40'	3362.3 40.0

COMPLETION DEPTH: 40.0'

DATE: 8-27-03 PROJECT NO.: 03070

COOK-JOYCE INC.
ENGINEERING AND CONSULTING
812 WEST ELEVENTH
AUSTIN, TEXAS 78701-2000
(512)474-9097 FAX (512)474-8463

GEOTR 03070 11-17-03

LOG OF BORING NO. B-3

Lockwood Greene Engineering and Construction

TYPE: 6" Flight Augers LOCATION: Eunice, N.M.

N 522,942.0 E 928,870.2 El 3403.38

DEPTH, FT	SYMBOL	SAMPLES	BLOWS PER FOOT OR REC/(RQD), %	STRATUM DESCRIPTION	LAYER ELEV./ DEPTH
				Fine sand with silt - very loose, very dry, red, (SM).	
5					3396.4
				Fine sand with silt and gravel (<1/4" Dia.) - very dry, gray, (SW).	7.0
10					
15					
				Fine sand with silt and gravel (<1/2" Dia.) - very dry, gray and red, some chert present, (SW).	
20					3380.4
				Top of red bed, silty clay - very dry, red, (CL).	23.0
25					
30					
35					3368.4
				TD=35'	35.0

COMPLETION DEPTH: 35.0'

DATE: 8-28-03 PROJECT NO.: 03070

COOK-JOYCE INC.
ENGINEERING AND CONSULTING
812 WEST ELEVENTH
AUSTIN, TEXAS 78701-2000
(512)474-9097 FAX (512)474-8463

GEOT2 03070 11-17-03

LOG OF BORING NO. B-4

Lockwood Greene Engineering and Construction

TYPE: 6" Flight Augers

LOCATION: Eunice, N.M.

N 524,233.0 E 925,711.8 El 3400.66

DEPTH, FT	SYMBOL	SAMPLES	BLOWS PER FOOT OR REC/(RQD), %	STRATUM DESCRIPTION	LAYER ELEV./ DEPTH
				Fine sand with silt - very loose, very dry, gray and red, (SM).	
5					
10					
15					
20					3379.7
				Fine sand with silt and gravel (<1" Dia.) - very dry, red and gray, (SW).	21.0
25					
30					
35					
40				Fine sand with silt and gravel (<1" Dia.) - very dry, gray and red, (SW).	
45					3355.7
				Top of red bed, silty clay - very dry, red, (CL).	45.0
50					
55					
60					3340.7
				TD=60'	60.0

COMPLETION DEPTH: 60.0'

DATE: 8-28-03 PROJECT NO.: 03070

COOK-JOYCE INC.
ENGINEERING AND CONSULTING
812 WEST ELEVENTH
AUSTIN, TEXAS 78701-2000
(512)474-9097 FAX (512)474-8463

03070 11-19-03

LOG OF BORING NO. B-5

Lockwood Greene Engineering and Construction

TYPE: 0-40' Hollow-Stems 40-45' Air Rotary

LOCATION: Eunice, N.M.

N 524,274.0 E 927,281.5 El 3408.85

DEPTH, FT	SYMBOL	SAMPLES	BLOWS PER FOOT OR REC/(RQD), %	STRATUM DESCRIPTION	LAYER ELEV./ DEPTH
				Fine sand with silt - very loose, very dry, red, (SM).	
5					
10				Fine sand with silt - very dry, red and gray, caliche present, (SM).	
15					
20					
25					
30					3378.9
				Fine sand with silt and gravel (< 1/2" Dia.) - very dry, gray and red, (SW). 6" gravel layer from 32'-32.5'.	30.0
35				3" gravel layer	
40					
					3365.9
				Top of red bed, silty clay - very dry, red, (CL).	43.0
45					3363.9
				TD=45'	45.0

COMPLETION DEPTH: 45.0'

DATE: 8-27-03 PROJECT NO.: 03070

COOK-JOYCE INC.
ENGINEERING AND CONSULTING
812 WEST ELEVENTH
AUSTIN, TEXAS 78701-2000
(512)474-8097 FAX (512)474-8463

GEOT2 03070 11-17-03

LOG OF BORING NO. B-6

Lockwood Greene Engineering and Construction

TYPE: 6" Flight Augers

LOCATION: Eunice, N.M.

N 524,346.4 E 928,685.6 El 3414.75

DEPTH, FT	SYMBOL	SAMPLES	BLOWS PER FOOT OR REC/(RQD), %	STRATUM DESCRIPTION	LAYER ELEV./ DEPTH
				Fine sand with silt - very loose,very dry,red, (SM).	
5				Fine sand with silt - very dry, red and gray, (SM).	
					3404.8
10				Fine sand with silt and gravel (< 1/4" Dia.) - very dry, gray, (SW).	10.0
15					
20				Fine sand with silt and gravel (< 1/2" Dia.) - very dry, gray, (SW).	
25					
30					
35					
					3374.8
40				Fine sand with silt - very dry, red and gray, (SM).	40.0
					3369.8
45				Top of red bed, silty clay - very dry, red, (CL).	45.0
50					
55					
					3354.8
60				TD=60'	60.0

COMPLETION DEPTH: 60.0'

DATE: 8-28-03 PROJECT NO.: 03070

COOK-JOYCE INC.
ENGINEERING AND CONSULTING
812 WEST ELEVENTH
AUSTIN, TEXAS 78701-2000
(512)474-8097 FAX (512)474-8463

CBOT2 03070 11-19-03

LOG OF BORING NO. B-7

Lockwood Greene Engineering and Construction

TYPE: 6" Flight Augers LOCATION: Eunice, N.M.

N 525,545.0 E 925,661.4 El 3415.00

DEPTH, FT	SYMBOL	SAMPLES	BLOWS PER FOOT OR REC/(RQD), %	STRATUM DESCRIPTION	LAYER ELEV./ DEPTH
				Fine sand with silt - very loose, very dry, red, (SM).	
5					
10				Fine sand with silt - very dry, red and gray, (SM).	
15					
20					3392.0
				Fine sand with silt and gravel (<1" Dia.) - very dry, gray and red, (SW).	23.0
25					3389.0
				Top of red bed, silty clay - very dry, red, (CL).	26.0
30					
35					
					3375.0
40				TD=40'	40.0

COMPLETION DEPTH: 40.0'

DATE: 8-28-03 PROJECT NO.: 03070

GB072 03070 11-17-03

COOK-JOYCE INC.
ENGINEERING AND CONSULTING
812 WEST ELEVENTH
AUSTIN, TEXAS 78701-2000
(512)474-9097 FAX (512)474-8463

LOG OF BORING NO. B-8

Lockwood Greene Engineering and Construction

TYPE: Hollow-Stem Augers 0-40', 40-45' Air Rotary

LOCATION: Eunice, N.M.

N 525,604.7 E 927,274.2 El 3423.29

DEPTH, FT	SYMBOL	SAMPLES	BLOWS PER FOOT OR REC/(RQD), %	STRATUM DESCRIPTION	LAYER ELEV./ DEPTH
				Fine sand with silt - very loose, very dry, red, (SM).	
5					
10					
15					
					3403.3
20				Fine sand with silt and gravel (<1" Dia.) - very dry, caliche and chert present, red, gray, and tan, (SW).	20.0
25					
30					
35					
					3385.3
				Top of red bed, silty clay - very dry, red, (CL).	38.0
40					
					3378.3
45				TD-45'	45.0

COMPLETION DEPTH: 45.0'

DATE: 8-26-03 PROJECT NO.: 03070

COOK-JOYCE INC.
ENGINEERING AND CONSULTING
812 WEST ELEVENTH
AUSTIN, TEXAS 78701-2000
(512)474-8097 FAX (512)474-8463

GEOT2 03070 11-17-03

LOG OF BORING NO. B-9

Lockwood Greene Engineering and Construction

TYPE: 6" Flight Augers

LOCATION: Eunice, N.M.

N 525,735.9 E 928,595.5 El 3421.33

DEPTH, FT	SYMBOL	SAMPLES	BLOWS PER FOOT OR REC/(RQD), %	STRATUM DESCRIPTION	LAYER ELEV./ DEPTH
				Fine sand with silt - very loose, very dry, red, (SM).	
5					3415.3
				Fine sand with silt and gravel (<1/2" Dia.) - very loose, slightly moist, (SW).	6.0
10					
					3407.3
15				Fine sand with silt - very dry, red and gray, (SM).	14.0
20				Fine sand with silt - very dry, gray, (SM).	
25					
30					
35				Fine sand with silt - very dry, red and gray, (SM).	
40					
45					3375.3
				Top of red bed, silty clay - very dry, red, (CL).	46.0
50					
55					
60					3361.3
				TD=60'	60.0

COMPLETION DEPTH: 60.0'

DATE: 8-28-03 PROJECT NO.: 03070

GB072 03070 11-17-03

COOK-JOYCE INC.
ENGINEERING AND CONSULTING
812 WEST ELEVENTH
AUSTIN, TEXAS 78701-2000
(512)474-9097 FAX (512)474-8463

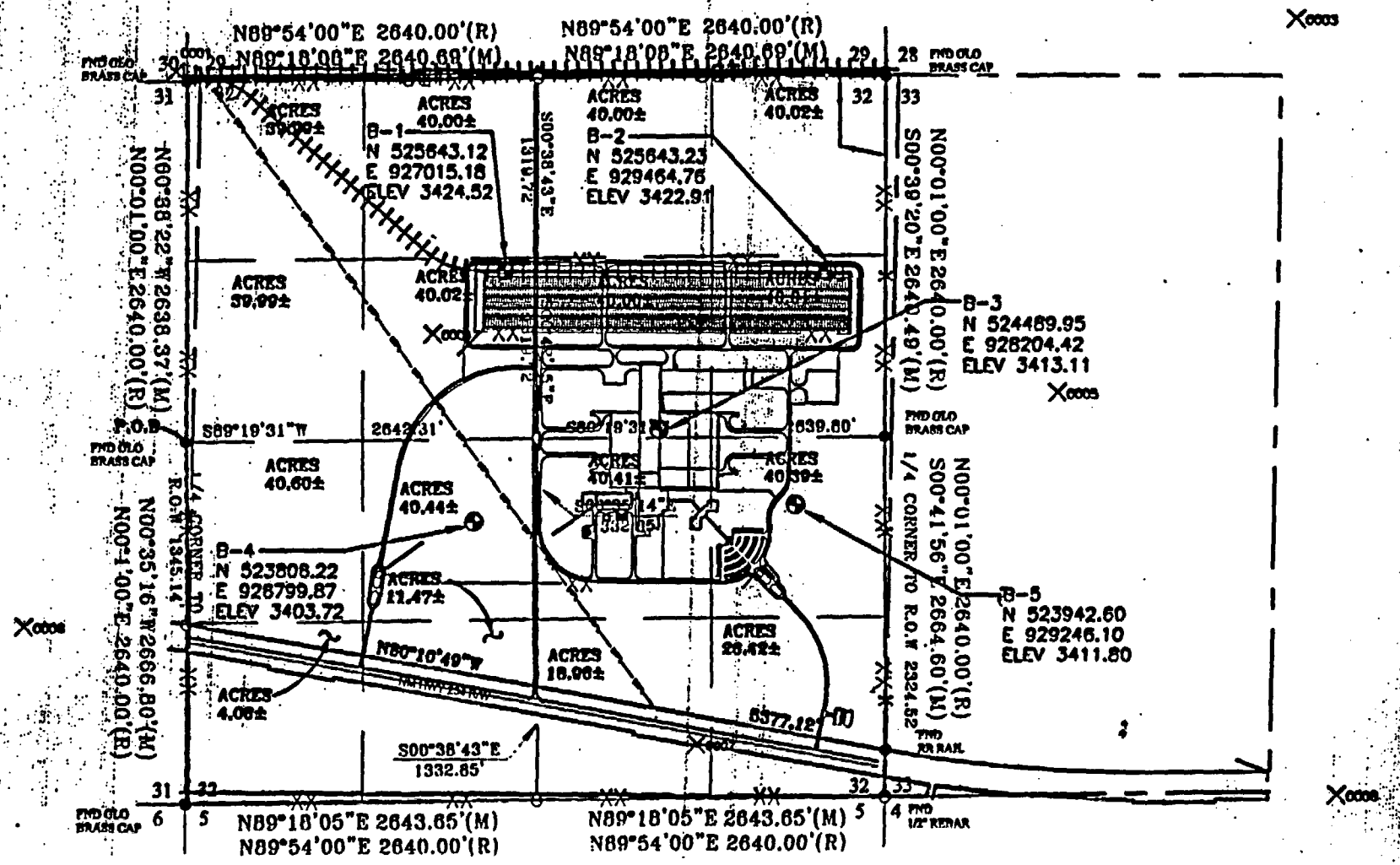

SOURCE: THIS DRAWING WAS ADAPTED FROM A CONCEPTUAL SITE PLAN SOIL BORING LAYOUT DATED SEPTEMBER 2, 2003 AND PROVIDED BY LOCKWOOD GREENE

LEGEND

B-1 ◆ BORING LOCATION AND IDENTIFICATION

MACTEC

MACTEC Engineering and Consulting, Inc.
1725 Louisville Drive
Knoxville, Tennessee 37921-5904
865-588-6544 • Fax: 865-588-6026

FIGURE 2: BORING LOCATION PLAN NATIONAL ENRICHMENT FACILITY LEA COUNTY, NEW MEXICO

DRAFTING BY:	PREPARED BY: MSH	CHECKED BY:
JOB NUMBER: 3043031049/0001	DATE: OCTOBER 2, 2003	SCALE: 0 1000

GROUP SYMBOLS	TYPICAL NAMES	GROUP SYMBOLS	TYPICAL NAMES
	TOPSOIL		CONCRETE
	ASPHALT		DOLOMITE
	GRAVEL		LIMESTONE
	FILL		SHALE
	SUBSOIL		LIMESTONE/SHALE - Limestone with shale interbeds
	ALLUVIUM		SANDSTONE
	COLLUVIUM		SILTSTONE
	RESIDUUM - Soft to firm		AUGER BORING
	RESIDUUM - Stiff to very hard		UNDISTURBED SAMPLE ATTEMPT

	Undisturbed Sample 1.5-2.0 = Recovered (ft) / Pushed (ft)		
	Split Spoon Sample		Auger Cuttings
	Rock Core 60-100 = RQD / Recovery		Dilatometer
	No Sample		Crandall Sampler
	Rotary Drill		Pressure Meter
	Water Table at time of drilling		No Recovery
			Water Table after 24 hours

Correlation of Penetration Resistance with Relative Density and Consistency

SAND & GRAVEL		SILT & CLAY	
No. of Blows	Relative Density	No. of Blows	Consistency
0 - 4	Very Loose	0 - 2	Very Soft
5 - 10	Loose	3 - 4	Soft
11 - 20	Firm	5 - 8	Firm
21 - 30	Very Firm	9 - 15	Stiff
31 - 50	Dense	16 - 30	Very Stiff
Over 50	Very Dense	31 - 50	Hard
		Over 50	Very Hard

BOUNDARY CLASSIFICATIONS: Soils possessing characteristics of two groups are designated by combinations of group symbols.

SILT OR CLAY	SAND			GRAVEL		Cobbles	Boulders
	Fine	Medium	Coarse	Fine	Coarse		

No.200 No.40 No.10 No.4 3/4" 3" 12"

U.S. STANDARD SIEVE SIZE

Reference: The Unified Soil Classification System, Corps of Engineers, U.S. Army Technical Memorandum No. 3-357, Vol. 1, March, 1953 (Revised April, 1960)

KEY TO SYMBOLS AND DESCRIPTIONS

MACTEC

MACTEC Engineering and Consulting, Inc.
1725 Louisville Drive
Knoxville, Tennessee 37921-5904
865-588-8544 • Fax: 865-588-8026

DEPTH (ft)	SOIL CLASSIFICATION AND REMARKS SEE KEY SYMBOL SHEET FOR EXPLANATION OF SYMBOLS AND ABBREVIATIONS BELOW.	ELEV (ft)	SAMPLE IDENT	TYPE	N-COUNT 1st 6" 2nd 6" 3rd 6"
0	REDDISH BROWN, DRY, SILTY FINE SAND WITH SOME FINE ROOTS - EOLIAN	3423.4			
	VERY DENSE, REDDISH BROWN, DRY, SILTY FINE TO MEDIUM SAND				
5		3418.4	SPT-1		15-25-28
10		3413.4	SPT-2		21-30-26
15	VERY DENSE, DARK RED, DRY, FINE TO MEDIUM SILTY FINE TO MEDIUM SAND WITH CLASTS OF CEMENTED SAND	3408.4	SPT-3		15-30-37
20	VERY DENSE, LIGHT REDDISH YELLOW, DRY, SILTY FINE TO MEDIUM SAND WITH CLASTS OF CEMENTED SAND	3403.4	SPT-4		50/6"
			UD-1		1.0-2.0
25		3398.4	SPT-5		50/6"
30		3393.4	SPT-6		50/6"
35	VERY DENSE, LIGHT REDDISH YELLOW, SILTY FINE TO COARSE SAND WITH SOME SUBANGULAR TO ROUNDED FINE GRAVEL	3388.4	SPT-7		50/4"
40	VERY HARD, DARK RED, DRY, HIGH PLASTICITY CLAY BORING TERMINATED 40.5'	3383.4	SPT-8		50/6"
45		3378.4			

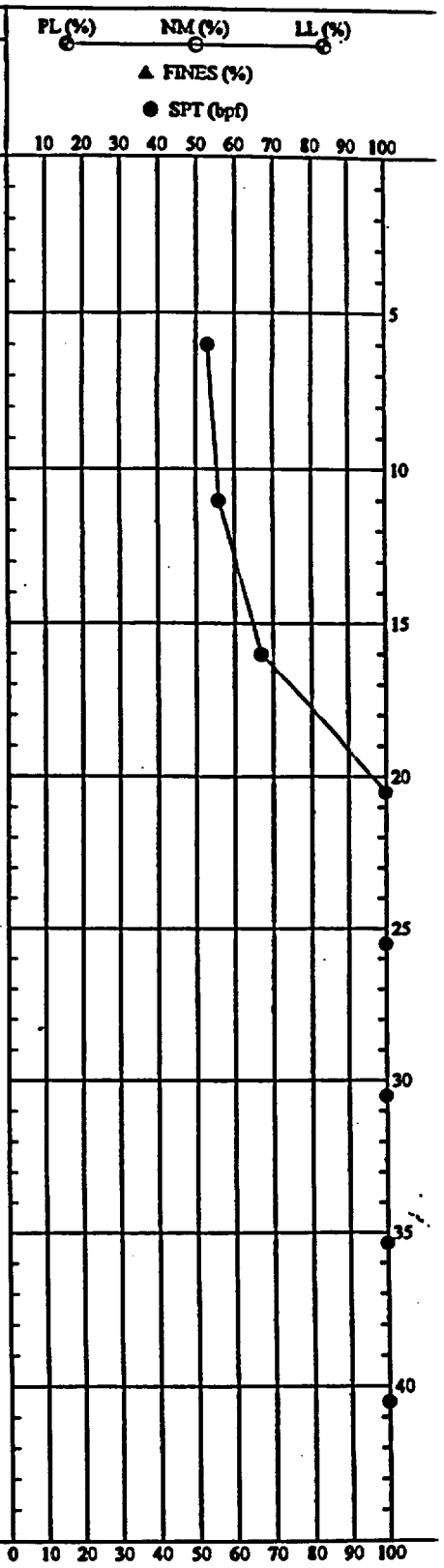

REMARKS: STANDARD PENETRATION RESISTANCE TESTING PERFORMED USING A SAFETY HAMMER. NO GROUND WATER ENCOUNTERED AT TIME OF EXPLORATION. BACK FILLED ON 9/9/2003.

THIS RECORD IS A REASONABLE INTERPRETATION OF SUBSURFACE CONDITIONS AT THE EXPLORATION LOCATION. SUBSURFACE CONDITIONS AT OTHER LOCATIONS AND AT OTHER TIMES MAY DIFFER. INTERFACES BEWEEN STRATA ARE APPROXIMATE. TRANSITIONS BETWEEN STRATA MAY BE GRADUAL.

SOIL TEST BORING RECORD

PROJECT: NEF - Lea County, New Mexico

DRILLED: September 9, 2003 BORING NO.: B-1

PROJ. NO.: 3043031049/0001 PAGE 1 OF 1

MACTEC

SOIL 3043031049 01.GPJ LAW GIBB.GDT 10/3/03

DEPTH (ft)	SOIL CLASSIFICATION AND REMARKS SEE KEY SYMBOL SHEET FOR EXPLANATION OF SYMBOLS AND ABBREVIATIONS BELOW.	LEGEND	ELEV (ft)	SAMPLES IDENT	TYPE	N-COUNT 1st 6" 2nd 6" 3rd 6"
0	REDDISH BROWN, DRY, SILTY, FINE SAND WITH SOME FINE ROOTS - EOLIAN		3422.2			
	VERY DENSE, LIGHT YELLOW, DRY, FINE SILTY SAND WITH CLASTS OF CEMENTED SAND - CALICHE FROM 6.0' - 7.5'					
5			3417.2	SPT-1		13-29-29
10	FIRM TO VERY FIRM, LIGHT YELLOW, DRY, SILTY FINE TO MEDIUM SAND		3412.2	SPT-3		11-10-10
15			3407.2	SPT-4		9-12-12
20	VERY FIRM TO VERY DENSE, LIGHT YELLOW, SILTY FINE TO MEDIUM SAND WITH CLASTS OF CEMENTED SAND FROM 25.0' TO 35.0'		3402.2	SPT-5		13-10-12
25			3397.2	SPT-6		15-50/5"
30			3392.2	SPT-7		50/1"
35	VERY HARD, DARK RED AND PURPLE, MOIST, HIGH PLASTICITY CLAY		3387.2	SPT-8		14-23-30
40			3382.2	SPT-9		12-33-50/5"
	BORING TERMINATED AT 41.4'					
45			3377.2			

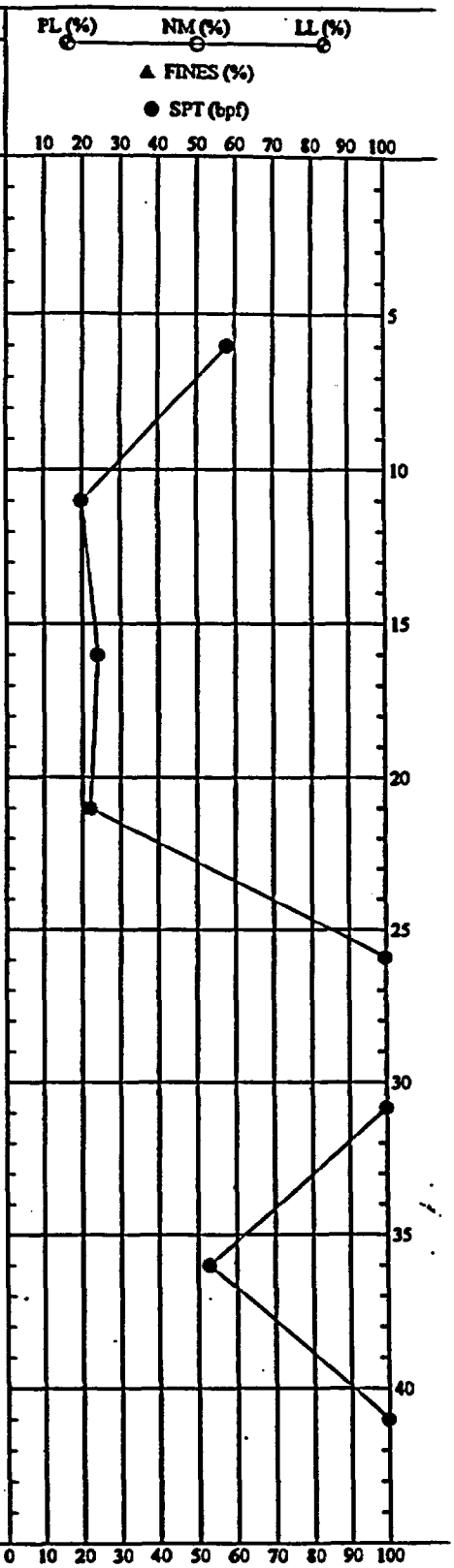

SOIL 3043031049 01.GPJ LAW GEB.GDT 10/3/03

REMARKS: STANDARD PENETRATION RESISTANCE TESTING PERFORMED USING A SAFETY HAMMER. NO GROUND WATER ENCOUNTERED AT TIME OF EXPLORATION. BACK FILLED ON 9/9/2003.

THIS RECORD IS A REASONABLE INTERPRETATION OF SUBSURFACE CONDITIONS AT THE EXPLORATION LOCATION. SUBSURFACE CONDITIONS AT OTHER LOCATIONS AND AT OTHER TIMES MAY DIFFER. INTERFACES BEWEEN STRATA ARE APPROXIMATE. TRANSITIONS BETWEEN STRATA MAY BE GRADUAL.

SOIL TEST BORING RECORD

PROJECT: NEF - Lea County, New Mexico

DRILLED: September 9, 2003 **BORING NO.:** B-2

PROJ. NO.: 3043031049/0001 **PAGE 1 OF 1**

MACTEC

DEPTH (ft)	SOIL CLASSIFICATION AND REMARKS SEE KEY SYMBOL SHEET FOR EXPLANATION OF SYMBOLS AND ABBREVIATIONS BELOW.	LEGEND	ELEV (ft)	SAMPLES IDENT	TYPE	N-COUNT 1st 6" 2nd 6" 3rd 6"	PL(%) NM(%) LL(%) ▲ FINES (%) ● SPT (bpf)
0	REDDISH BROWN, DRY, SILTY FINE SANDY WITH SOME ROOTS - EOLIAN VERY DENSE, REDDISH BROWN, DRY, SILTY FINE TO MEDIUM SAND WITH CLASTS OF CEMENTED SAND		3412.5				
5			3407.5	SPT-1		30-50/5"	5
10			3402.5	SPT-2		33-50/6"	10
15	VERY DENSE, LIGHT YELLOW, DRY SILTY FINE TO MEDIUM SAND - CALICHE		3397.5	SPT-3		50/1"	15
20	VERY DENSE, REDDISH YELLOW, DRY SILTY FINE TO MEDIUM SAND WITH CLASTS OF CEMENTED SAND AND SOME FINE SUBANGULAR TO ROUNDED GRAVEL		3392.5	SPT-4		22-40-50/3"	20
25	VERY DENSE, LIGHT YELLOW, DRY SILTY FINE TO MEDIUM CEMENTED SAND - CALICHE		3387.5	SPT-5		50/2"	25
30			3382.5	SPT-6		50/2"	30
35	VERY DENSE, REDDISH BROWN, DRY, SILTY FINE TO MEDIUM SAND		3377.5	SPT-7		50/3"	35
40	VERY HARD, DARK RED, DRY, HIGH PLASTICITY CLAY		3372.5	SPT-8		23-50/6"	40
45			3367.5				

0 10 20 30 40 50 60 70 80 90 100

REMARKS: STANDARD PENETRATION RESISTANCE TESTING PERFORMED USING A SAFETY HAMMER. NO GROUND WATER ENCOUNTERED AT TIME OF EXPLORATION. BACK FILLED ON 9/10/2003.

THIS RECORD IS A REASONABLE INTERPRETATION OF SUBSURFACE CONDITIONS AT THE EXPLORATION LOCATION. SUBSURFACE CONDITIONS AT OTHER LOCATIONS AND AT OTHER TIMES MAY DIFFER. INTERFACES BEWEEN STRATA ARE APPROXIMATE. TRANSITIONS BETWEEN STRATA MAY BE GRADUAL.

SOIL TEST BORING RECORD

PROJECT: NEF - Lea County, New Mexico

DRILLED: September 10, 2003 BORING NO.: B-3

PROJ. NO.: 3043031049/0001 PAGE 1 OF 3

MACTEC

SOIL 3043031049 01.GPJ LAW GIBB.GDT 10/3/03

DEPTH (ft)	SOIL CLASSIFICATION AND REMARKS SEE KEY SYMBOL SHEET FOR EXPLANATION OF SYMBOLS AND ABBREVIATIONS BELOW.	LEGEND	ELEV (ft)	SAMPLES IDENT	TYPE	N-COUNT 1st 6" 2nd 6" 3rd 6"	PL (%) NM (%) LL (%) ▲ FINES (%) ● SPT (bpf)
45	VERY HARD, DARK RED, DRY, HIGH PLASTICITY CLAY		3367.5	SPT-9		27-50/5"	
50			3362.5	SPT-10		39-50/2"	
55	VERY HARD, DARK RED AND PURPLE, DRY, HIGH PLASTICITY CLAY		3357.5	SPT-11		35-50/4"	
60			3352.5	SPT-12		31-50/5"	
65			3347.5	SPT-13		32-50/4"	
70			3342.5	SPT-14		22-50/5"	
75			3337.5	SPT-15		39-50/4"	
80	VERY HARD, DARK RED AND PURPLE, DRY, HIGH PLASTICITY CLAY WITH OCCASIONAL THIN CEMENTED LAYERS OF GREENISH GRAY		3332.5	SPT-16		50/4"	
85	VERY HARD, REDDISH PURPLE WITH GRAY MOTTLING, DRY HIGH PLASTICITY CLAY		3327.5	SPT-17		50/6"	
90			3322.5				

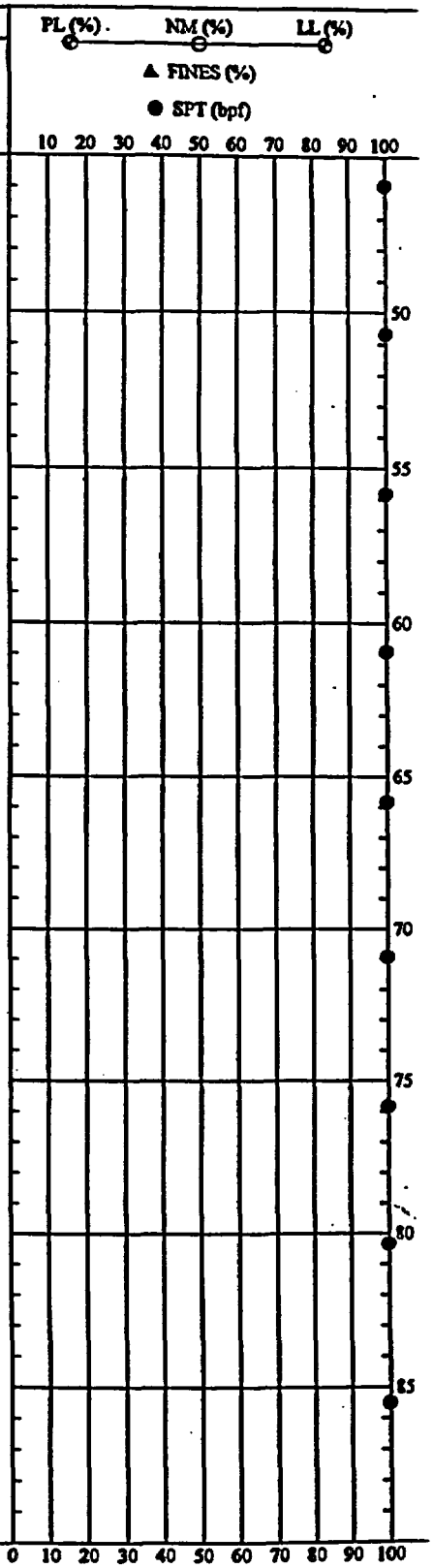

SOIL 3043031049 01.GPJ LAW GTBB.GDT 10/2/03

REMARKS: STANDARD PENETRATION RESISTANCE TESTING PERFORMED USING A SAFETY HAMMER. NO GROUND WATER ENCOUNTERED AT TIME OF EXPLORATION. BACK FILLED ON 9/10/2003.

THIS RECORD IS A REASONABLE INTERPRETATION OF SUBSURFACE CONDITIONS AT THE EXPLORATION LOCATION. SUBSURFACE CONDITIONS AT OTHER LOCATIONS AND AT OTHER TIMES MAY DIFFER. INTERFACES BEWEEN STRATA ARE APPROXIMATE. TRANSITIONS BETWEEN STRATA MAY BE GRADUAL.

SOIL TEST BORING RECORD

PROJECT: NEF - Lea County, New Mexico

DRILLED: September 10, 2003 BORING NO.: B-

PROJ. NO.: 3043031049/0001 PAGE 2 OF

MACTEC

DEPTH (ft)	SOIL CLASSIFICATION AND REMARKS SEE KEY SYMBOL SHEET FOR EXPLANATION OF SYMBOLS AND ABBREVIATIONS BELOW.	LEGEND	ELEV (ft)	SAMPLES IDENT	TYPE	N-COUNT 1st 6" 2nd 6" 3rd 6"	PL (%) NM (%) LL (%) ▲ FINES (%) ● SPT (bpf)
90	VERY HARD, RED AND PURPLE, DRY, HIGH PLASTICITY CLAY		3322.5	SPT-18		50/5"	
95			3317.5	SPT-19		50/6"	
100	BORING TERMINATED AT 100.5'		3312.5	SPT-20		50/6"	
105			3307.5				
110			3302.5				
115			3297.5				
120			3292.5				
125			3287.5				
130			3282.5				
135			3277.5				

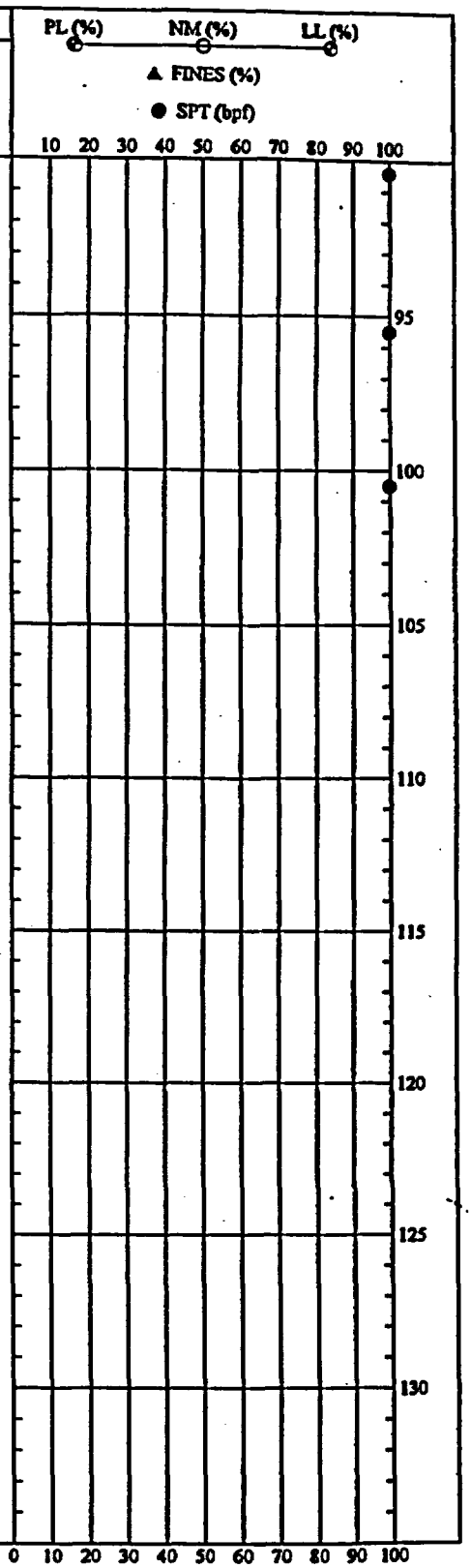

SOIL 3043031049 01.GPJ LAW GTBB.GDT 10/3/03

REMARKS: STANDARD PENETRATION RESISTANCE TESTING PERFORMED USING A SAFETY HAMMER. NO GROUND WATER ENCOUNTERED AT TIME OF EXPLORATION. BACK FILLED ON 9/10/2003.

THIS RECORD IS A REASONABLE INTERPRETATION OF SUBSURFACE CONDITIONS AT THE EXPLORATION LOCATION. SUBSURFACE CONDITIONS AT OTHER LOCATIONS AND AT OTHER TIMES MAY DIFFER. INTERFACES BEWEEN STRATA ARE APPROXIMATE. TRANSITIONS BETWEEN STRATA MAY BE GRADUAL.

SOIL TEST BORING RECORD

PROJECT: NEF - Lea County, New Mexico

DRILLED: September 10, 2003 BORING NO.: B-3

PROJ. NO.: 3043031049/0001 PAGE 3 OF 3

MACTEC

DEPTH (ft)	SOIL CLASSIFICATION AND REMARKS SEE KEY SYMBOL SHEET FOR EXPLANATION OF SYMBOLS AND ABBREVIATIONS BELOW.	LEGEND	ELEV (ft)	SAMPLES IDENT	TYPE	N-COUNT 1st 6" 2nd 6" 3rd 6"
0	REDDISH BROWN, DRY, SILTY FINE SAND WITH SOME ROOTS - EOLIAN		3403.5			
	VERY DENSE, REDDISH BROWN, DRY, SILTY FINE SAND					
5			3398.5	SPT-1		26-50/6"
10	DENSE TO VERY DENSE, LIGHT RED, DRY, SILTY FINE TO MEDIUM SAND WITH CLASTS OF CEMENTED SAND		3393.5	SPT-2		17-26-23
15			3388.5	SPT-3		20-39-37
20	VERY FIRM TO VERY DENSE, LIGHT RED, DRY, SILTY FINE SAND WITH CEMENTED ZONES FROM 25.0' TO 30.0'		3383.5	SPT-4		7-13-12
				UD-2		1.0-2.0
25			3378.5	SPT-5		16-34-27
30	VERY DENSE, LIGHT REDDISH BROWN, DRY FINE SILTY FINE TO MEDIUM SAND		3373.5	SPT-6		16-30-41
35			3368.5	SPT-7		39-50/4"
40	VERY HARD, DARK RED, DRY, HIGH PLASTICITY CLAY BORING TERMINATED AT 40.8'		3363.5	SPT-8		35-50/4"
45			3358.5			

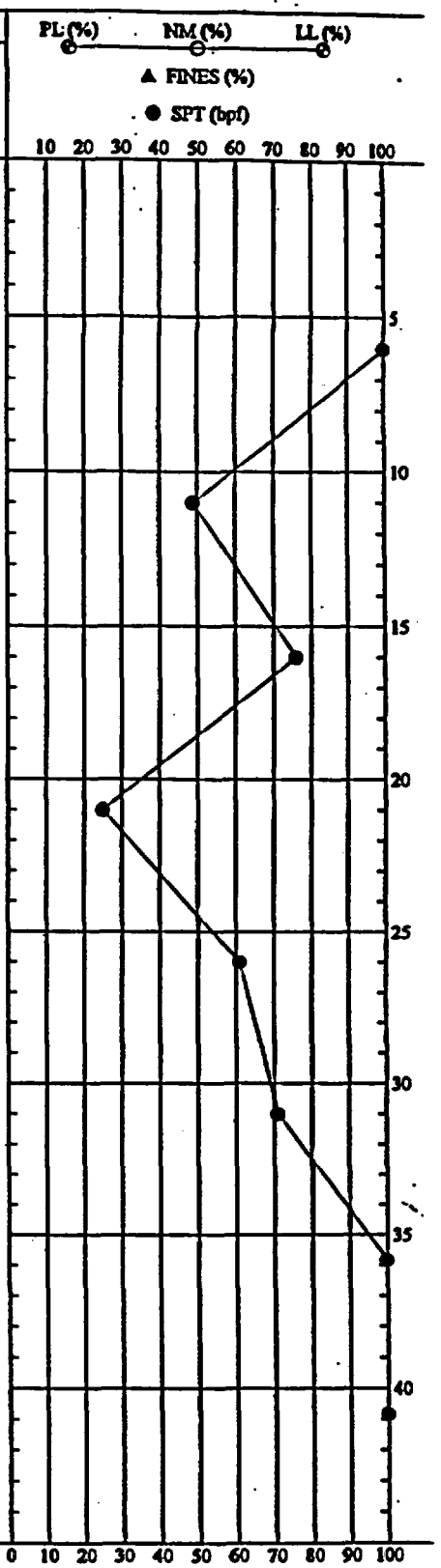

SOIL 3043031049 01.GPJ LAW GIBB.GDT 10/3/03

REMARKS: STANDARD PENETRATION RESISTANCE TESTING PERFORMED USING A SAFETY HAMMER. NO GROUND WATER ENCOUNTERED AT TIME OF EXPLORATION. BACK FILLED ON 9/9/2003.

THIS RECORD IS A REASONABLE INTERPRETATION OF SUBSURFACE CONDITIONS AT THE EXPLORATION LOCATION. SUBSURFACE CONDITIONS AT OTHER LOCATIONS AND AT OTHER TIMES MAY DIFFER. INTERFACES BEWEEN STRATA ARE APPROXIMATE. TRANSITIONS BETWEEN STRATA MAY BE GRADUAL.

SOIL TEST BORING RECORD

PROJECT: NEF - Lea County, New Mexico

DRILLED: September 9, 2003 BORING NO.: B-4

PROJ. NO.: 3043031049/0001 PAGE 1 OF 1

MACTEC

DEPTH (ft)	SOIL CLASSIFICATION AND REMARKS SEE KEY SYMBOL SHEET FOR EXPLANATION OF SYMBOLS AND ABBREVIATIONS BELOW.	ELEV (ft)	SAMPLE IDENT	TYPE	N-COUNT 1st 6" 2nd 6" 3rd 6"
0	REDDISH BROWN, DRY, SILTY FINE SAND WITH SOME FINE ROOTS - EOLIAN	3411.2			
	VERY DENSE, REDDISH YELLOW, DRY SILTY FINE TO MEDIUM SAND				
5		3406.2	SPT-1		25-35-35
10	VERY DENSE, LIGHT YELLOW, DRY, SILTY FINE TO MEDIUM CEMENTED SAND - CALICHE	3401.2	SPT-2		50/5"
15		3396.2	SPT-3		50/5"
20	VERY DENSE, LIGHT YELLOW, DRY SILTY FINE TO MEDIUM SAND WITH CLASTS OF CEMENTED SAND	3391.2	SPT-4		15-24-36
25		3386.2	SPT-5		9-38-50/4"
30	VERY DENSE, REDDISH YELLOW, DRY, SILTY FINE TO MEDIUM SAND WITH SOME FINE SUBANGULAR TO ROUNDED GRAVEL	3381.2	SPT-6		50/5"
35		3376.2	SPT-7		30-50/4"
40	VERY HARD, REDDISH PURPLE, DRY, HIGH PLASTICITY CLAY BORING TERMINATED AT 41.0'	3371.2	SPT-8		18-50/6"
45		3366.2			

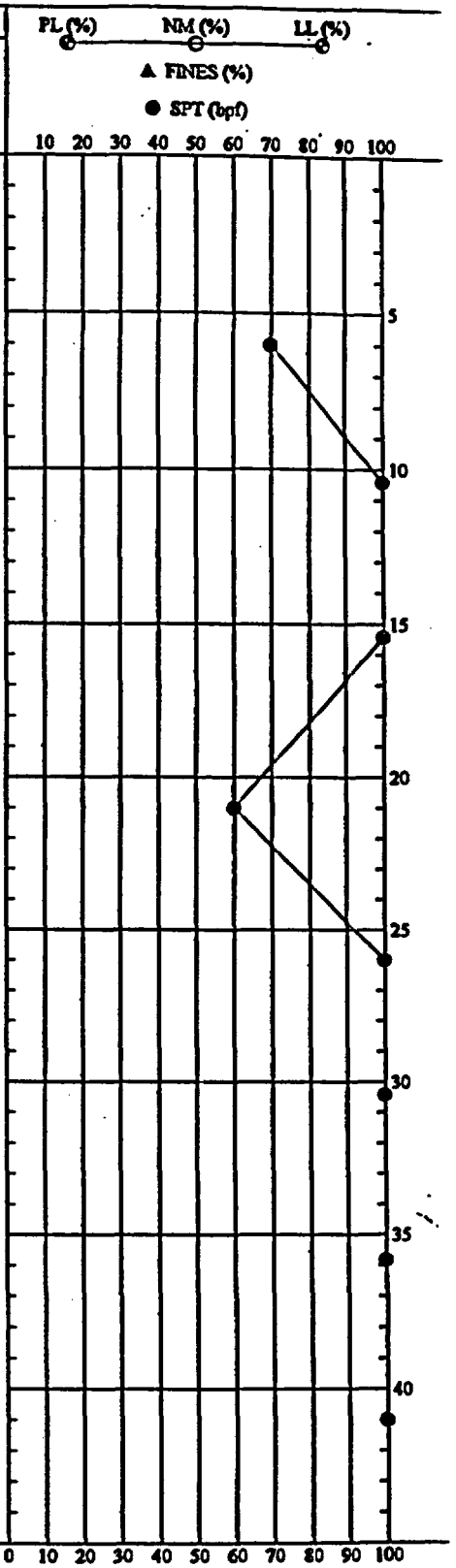

SOIL 3045031049 01.GPJ LAW GDB.GDT 10/2/03

REMARKS: STANDARD PENETRATION RESISTANCE TESTING PERFORMED USING A SAFETY HAMMER. NO GROUND WATER ENCOUNTERED AT TIME OF EXPLORATION. BACK FILLED ON 9/10/2003.

THIS RECORD IS A REASONABLE INTERPRETATION OF SUBSURFACE CONDITIONS AT THE EXPLORATION LOCATION. SUBSURFACE CONDITIONS AT OTHER LOCATIONS AND AT OTHER TIMES MAY DIFFER. INTERFACES BEWEEN STRATA ARE APPROXIMATE. TRANSITIONS BETWEEN STRATA MAY BE GRADUAL.

SOIL TEST BORING RECORD

PROJECT: NEF - Lea County, New Mexico

DRILLED: September 10, 2003 BORING NO.: B-5

PROJ. NO.: 3043031049/0001 PAGE 1 OF 1

MACTEC

APPENDIX B

SUMMARY OF FIELD ACTIVITIES

SUMMARY OF FIELD ACTIVITIES

Shallow Boring Program

On 26 August 2003, Total Support Services, Inc. (TSS), LG, and CJI personnel were on-site with a Mobil B-59 drill rig to install the nine shallow subsurface soil borings. Initially, CJI proposed to air rotary drill each of the borings to the redbeds. However, due to the looseness and subsequent continuous cave-ins of the sandy soil near the surface, hollow-stem augers were used to keep the boreholes open. After attempts to air rotary drill B-8 and B-5 through hollow-stem augers proved difficult, solid-stem augers were determined to be the preferred method of installing the shallow boreholes. Although hollow-stem augers were used to advance B-2, solid-stem augers were utilized to advance the remaining six shallow boreholes.

In each of the nine shallow boreholes, a CJI geologist lithologically logged the soil using the USCS classification system from borehole cuttings. Particular attention was paid to the upper contact of the redbeds (see Figure 4). The lithologic logs of each of these borings can be found in Appendix A of this report. Upon reaching the upper contact of the redbeds, each borehole was over-drilled several feet so that the borehole might remain open below the contact. On 28 August 2003, the last of the shallow boreholes were completed. On 29 August, each borehole was gauged using an electric water level indicator to determine whether any groundwater had collected in the boring. The top of redbed depths and elevations are shown on Table 1.

Deep Boring Program

The deep subsurface investigation was originally proposed to be conducted using mud rotary drilling techniques which would allow the collection of soil core samples in B-1, B-7, and B-9 from the top of the redbeds to the bottom of the uppermost water-bearing zone. The lower contact of the shallowest water-bearing zone was anticipated to be between 220' and 250' BGS.

On 3 September, TSS personnel mobilized to the site with a Mobil B-53 drill rig to conduct the deep subsurface investigation. TSS set up on B-1 and attempted to set hollow-stem augers to the top of the redbeds. However, due to geologic conditions (the presence of large gravel), the

hollow-stem augers became lodged in the borehole at a depth of about 50' BGL. Numerous unsuccessful attempts were made to dislodge the augers. Eventually another borehole was advanced near the first borehole location. The result was the same and the augers were lodged at about 45' BGL. After unsuccessfully attempting to retrieve the drilling equipment from the two boreholes, the equipment was abandoned. A total of 40' of hollow-stem augers was lost in B-1. At that time, due to geologic conditions, a decision to abandon B-1 and replace that monitor well location with B-3 was made.

Following the abandonment of B-1, TSS moved to B-7. Prior to mud rotary drilling B-7, hollow-stem augers were advanced to the top of the redbeds to keep the upper sand from collapsing into the borehole. Once the hollow-stems were in place, mud rotary drilling was to be used to advance the borehole to total depth (TD). However, due to prior drilling difficulties and time constraints, the decision to utilize air rotary drilling methods to advance B-7 to 180' BGS prior to converting to mud rotary drilling techniques was made. On 7 September, TSS began core sampling B-7 starting at 180' BGS. Due to mud rotary drilling difficulties there was essentially no recovery of core soil samples from 180'-205' BGS. After numerous unsuccessful attempts to collect core soil samples from B-7, a decision was made to air core each of the three test boreholes to 250' BGS and then geophysically log the boreholes to determine monitor well design information.

At that time, TSS began advancing B-9 to 250' using air rotary drilling techniques. After casing the upper 45' of soil using 8-1/4" outer diameter (OD) hollow-stem augers, test borehole B-9 was advanced to a TD of 250' BGS. After tripping the drilling equipment out of the borehole, an electric water level indicator was used to check for the presence of groundwater. It was determined that there was no groundwater in the test borehole immediately upon completion of drilling activities. The borehole was allowed to remain open overnight and was checked the following day. On 10 September, CJI personnel determined groundwater in B-9 was at about 232.22' BGS. Using the same drilling methods, the test borehole at B-7 and the first test borehole at B-3 were completed to about 250' BGS on 11 September and 12 September, respectively. The test boreholes were dry to TD immediately upon completion of drilling activities. Groundwater was not present in B-7 even after allowing it to remain open overnight.

The test borehole at B-3 was geophysically logged immediately after drilling and was not allowed to remain open overnight for subsequent groundwater level data collection.

Before geophysical logging activities could be completed in the test borehole at B-3, the borehole collapsed to 25' BGS. Therefore, a second test borehole was drilled at B-3 to about 250' BGS on 13 September. The second test borehole was also dry upon completion of drilling activities and was geophysically logged immediately thereafter.

Monitor Well Drilling and Installation Program

After the test boreholes at B-3, B-7, and B-9 were geophysically logged, TSS began to make preparations to advance a borehole at each of these locations in which a monitor well would be installed. The boreholes would be cased to the top of the redbeds using 10" OD hollow-stem augers and then air drilled to TD using air rotary drilling methods with a 6"-diameter bit. After setting up to begin this process at B-3, the B-59 drill rig broke down and was not able to be repaired. For this reason, TSS and CJI demobilized from the site on 14 September.

On 18 September, TSS and CJI mobilized to the site. In addition, due to additional time constraints, a second drill rig (CME 75) supplied by Enviro-Drill, Inc. (EDI) was on-site to facilitate monitor well drilling and installation processes.

TSS set up on B-7 (MW-1) and advanced 10" OD hollow-stem augers to 30' BGS. After completing this task, TSS moved to B-3 and began drilling MW-3 by also installing 30' of 10" OD augers. EDI began drilling at B-9 (MW-2) by installing 50' of 10" OD hollow-stem augers. TSS and EDI advanced each monitor well boring to TD using air rotary drilling techniques and 6"-diameter bits. Both crews were using Sullair 900 air compressors. However, EDI drilled using 125 pounds per square inch (PSI) air pressure while TSS drilled using 150 PSI air pressure. On 19 September, TSS reached TD of 240' BGS in MW-3 borehole and EDI reached TD of 235.5' BGS in MW-2 borehole. After completing the installation of MW-3, TSS set up over the augers previously set in the MW-1 borehole. On 20 September, TSS reached TD of 231' BGS in MW-1 borehole.

Upon reaching TD, each crew installed the monitor well material, as witnessed by CJI and LG personnel. Monitor well construction diagrams detailing the installations can be found in Appendix D of this report. Each monitor well was constructed using 2-inch diameter Schedule 40 PVC sealed in its factory packaging. Personnel who handled the unpackaged screen or casing donned latex gloves prior to handling the material. Each monitor well was constructed using 15' of 0.010-inch slotted screen and enough riser to bring the monitor well to the surface. Stainless steel centralizers were attached to the riser about every 50' to hold the monitor well in place. After inserting the screen and riser into the monitor well borehole, a sand filter pack was poured from the surface to bring the sand filter at least three feet above the top of the screened interval. Following placement of the sand filter, bentonite chips were poured from the surface to a level of 75' BGS. The bentonite chips were then hydrated using 10 gallons of distilled water. After pouring in the distilled water, the chips were allowed to hydrate. A cement/bentonite slurry was then placed into the monitor well borehole to fill the annulus to about ground level. Then grout was placed into the annulus by pressure grouting from the bottom up using tremie pipe. After the grout was placed to this level, the hollow-stem augers were removed. The monitor wells were then allowed to set up overnight. The following day, bentonite chips were added to bring the plug to about surface level. After pouring in the appropriate amount of bentonite chips, they were hydrated with five gallons of distilled water. The drop in the level of the cement/bentonite slurry was between 7' and 17' BGS in the three monitor wells.

A variance from the general construction process in Monitor Well MW-1 is noted. While removing the hollow-stem augers from Monitor Well MW-1, TSS experienced some difficulties. About 15' of augers became lodged in the hole and, due to darkness, had to remain in the borehole overnight. The augers were eventually removed the following day. However, in the process of removing them, some loose soil caved in on top of the cement/bentonite slurry.

Each of the monitor wells was surface-completed with a 4'x4'x6" concrete pad and a protective steel upright casing. Prior to pouring concrete for the pads, plastic was laid down within the form to help keep the moisture from being drawn out to the underlying sandy soil. In addition, 6"x6" wire mesh was cut and laid in the forms to help strengthen the concrete. A three-sided, pre-fabricated metal fence was then placed around each pad to protect the monitor well from

cows and other potential harm. In addition, each of the protective casings was locked with a padlock to help prevent tampering.

APPENDIX C

GEOPHYSICAL LOGS

THIS PAGE IS AN OVERSIZED DRAWING OR FIGURE,

THAT CAN BE VIEWED AT THE RECORD TITLED: "COOK-JOYCE INC. ELECTRIC LOG HOLE NO. B-3, HOLE NO.B-7. HOLE NO.B-9."

WITHIN THIS PACKAGE..

D-01

APPENDIX D

MONITOR WELL CONSTRUCTION DIAGRAM

Well No.: MW-1
Boring No.: B-7

MONITOR WELL CONSTRUCTION SUMMARY

Survey Coordinates:	525569.741 N	Elevation Ground Level:	3415.44'
	925710.071 E	Top of Casing:	3418.37'
New Mexico State Plane Zone 3001 (NAD83)		Screened Interval:	3186.7' – 3201.7'

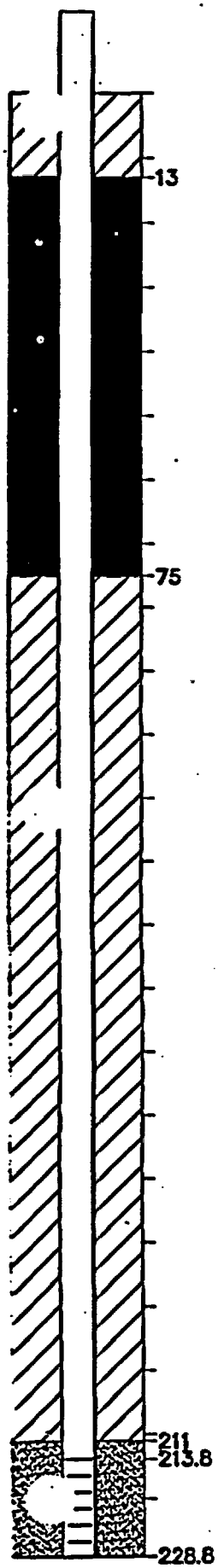

DRILLING SUMMARY

Total Depth: 231'
Borehole Diameter: 10" Augers 0 – 30' BGS
6" Air 30' – 231' BGS
Casing Stick-up Height: 2.93'
Driller: Total Support Services
Rig: B-59
Bit(s): 6" Rotary Bit, 10" Hollow Stem Augers
Drilling Fluid: Air
Protective Casing: 4" x 4" Steel

CONSTRUCTION TIME LOG[1]

Task	Start Date	Start Time	Finish Date	Finish Time
Drilling:				
Augers	9/18	17:25	9/18	17:55
Air Drill	9/20	10:30	9/20	14:20
Geophys Log:	9/12	10:45	9/12	11:30
Casing:	9/20	16:05	9/20	16:35
Filter Placement:	9/20	16:40	9/20	16:47
Cementing:	9/20	17:42	9/20	18:02
Bentonite Seal:	9/20	16:47	9/20	17:42
	9/21	11:03	9/21	11:15

WELL DESIGN AND SPECIFICATIONS

Basis: Geologic Log ___ Geophysical Log X
Casing String(s): C = Casing S - Screen

Depth	String(s)	Elevation
0' – 213. 8'	C	3201.7' – 3415. 4'
213. 8' – 228. 8'	S	3186.7' – 3201.7'

Casing: C1 2" Flush Threaded Schedule 40 PVC
C2
Screen: S1 2" Flush Threaded Schedule 40 PVC, 0.01" Slot
S2

WELL DEVELOPMENT

WELL COMPLETION

Filter Pack: 211' – 229' BGS (7-50 lb. bags of 20-40 filtered Unimin silica sand)

Bentonite Seal: 75' – 211' BGS (40½-50 lb. Bags)

Grout Seal: 2 pours: 1st pour; 100 gallons water, 6-92.5 bags Portland cement, and ½-50 lb. bag CETCO Super Gel; 2nd pour 75-gallons water, 4-92.5 lb. bags Portland cement and 1/3-50 lb. bag CETCO Super Gel.

COMMENTS: [1]All dates 2003. Hydrated chips from 75' – 211' BGS with 10 gallons distilled water. On 9/21, added 13 bags of Bentonite from 1' – 13' BGS and hydrated with 5 gallons of distilled water. Centralizers at 51', 101', 151', and 201' BGS.

Site Name: LES EUNICE, N.M.

Supervised by: Edward E. Hyder
Date: 11/19/03

LOCKWOOD GREENE\FINAL\03070\
F031119_WELL NO. MW-1.DOC

Well No.: MW-2
Boring No.: B-9

MONITOR WELL CONSTRUCTION SUMMARY

Survey Coordinates:	525770.200 N	Elevation Ground Level:	3422.14'
	928625.728 E	Top of Casing:	3425.25'
New Mexico State Plane Zone 3001 (NAD83)		Screened Interval:	3180.32' – 3205.32'

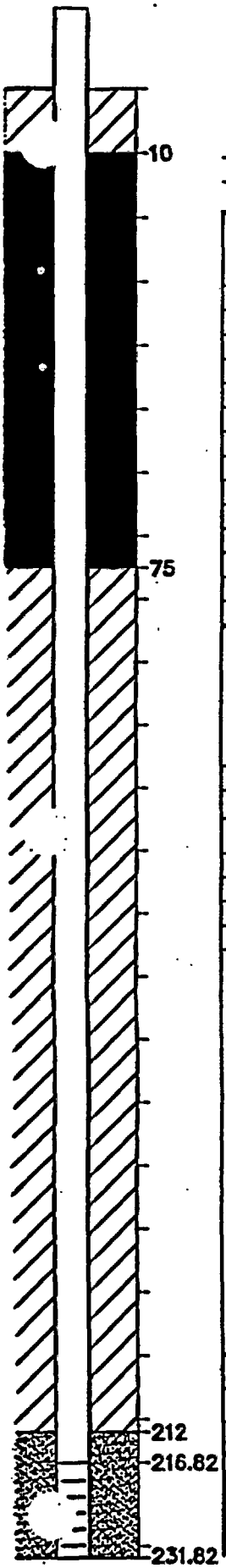

DRILLING SUMMARY

Total Depth: 235.5'
Borehole Diameter: 10"Augers 0 – 50' BGS
6" Air 50' – 235.5' BGS
Casing Stick-up Height: 3.11'
Driller: Enviro-Drill, Inc.
Rig: CME-75
Bit(s): 6" Cutter Bit, 10" Hollow Stem Augers
Drilling Fluid: Air
Protective Casing: 4" x 4" Steel

CONSTRUCTION TIME LOG[1]

Task	Start Date	Start Time	Finish Date	Finish Time
Drilling:				
Augers	9/18	17:49	9/18	19:35
Air Drill	9/19	08:25	9/19	12:45
Geophys Log:	9/10	12:00	9/10	19:00
Casing:	9/19	15:40	9/19	16:20
Filter Placement:	9/19	16:25	9/19	16:35
Cementing:	9/19	19:05	9/19	20:32
Bentonite Seal:	9/19	16:36	9/19	17:02
	9/20	11:15	9/20	11:25

WELL DESIGN AND SPECIFICATIONS

Basis: Geologic Log ___ Geophysical Log X
Casing String(s): C = Casing S - Screen

Depth	String(s)	Elevation
0' – 216.82'	C1	3200.32' – 3422.14'
216.82' – 231.82'	S1	3180.32' – 3205.32'

Casing: C1 2" Flush Threaded Schedule 40 PVC
C2
Screen: S1 2" Flush Threaded Schedule 40 PVC, 0.010" Slot
S2

WELL DEVELOPMENT

Filter Pack: 212' – 232' BGS (8-50 lb. bags of 20-40 filtered Unimin silica sand)

Bentonite Seal: 75' – 212' BGS (41 1/3-50 lb. Bags)

Grout Seal: 3 pours: 1st pour; 160 gallons of water, 6-92.5 lb. Bags Portland cement, and 1-50 lb. bag CETCO Super Gel. 2nd pour; 60 gallons of water, 2-92.5 lb bags of Portland, and 1/3-50 lb bag of CETCO Supergel. 3rd pour; 25 gallons of water, 1-92.5 lb bags of Portland, and 1/8-50 lb bag of CETCO Supergel.

COMMENTS: [1]All dates 2003. Hydrated chips with 10 gallons distilled water from 75' – 212'. Centralizers at 47', 97', 147', and 197' BGS. On 9/20 added 7 bags of Bentonite chips from 1' – 10' BGS and hydrated with 5 gallons of distilled water.

Site Name: LES EUNICE, N.M.

Supervised by: Edward E. Idesfer

Date: 11/19/03

Well No.: MW-3
Boring No.: B-3

MONITOR WELL CONSTRUCTION SUMMARY

Survey Coordinates: 522989.922 N
928883.162 E
New Mexico State Plane Zone 3001 (NAD83)

Elevation Ground Level: 3403.98'
Top of Casing: 3406.98'
Screened Interval: 3168.08' – 3183.08'

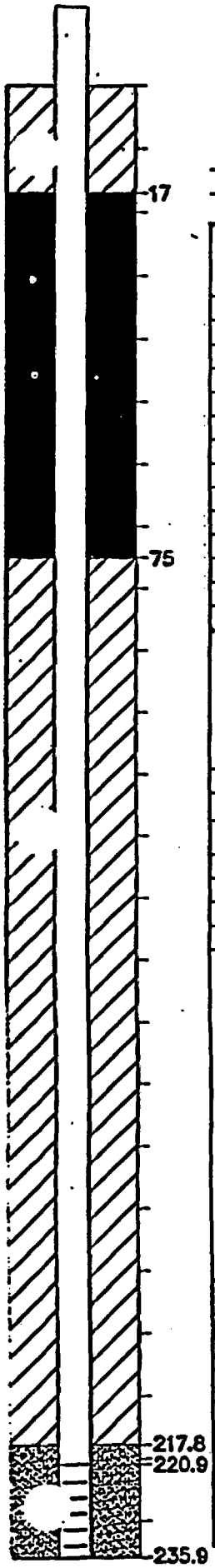

DRILLING SUMMARY

Total Depth: 240'
Borehole Diameter: 10"Augers 0 – 30' BGS
6" Air 30' – 240' BGS
Casing Stick-up Height: 3.0'
Driller: Total Support Services, Inc..
Rig: B-59
Bit(s): 6" Rotary Bit, 10" Hollow Stem Augers
Drilling Fluid: Air
Protective Casing: 4" x 4" Steel

CONSTRUCTION TIME LOG[1]

Task	Start Date	Start Time	Finish Date	Finish Time
Drilling:				
Augers	9/18	19.14	9/18	19:48
Air Drill	9/19	10:45	9/19	14:45
Geophys Log:	9/13	16:00	9/13	17:50
Casing:	9/19	17:15	9/19	17:55
Filter Placement:	9/19	18:00	9/19	18:08
Cementing:	9/19	19:15	9/19	19:33
Bentonite Seal:	9/19	18:10	9/19	18:42
	9/20	08:18	9/20	08:30

WELL DESIGN AND SPECIFICATIONS

Basis: Geologic Log ___ Geophysical Log X
Casing String(s): C = Casing S - Screen

Depth	String(s)	Elevation
0' – 220.9'	C	3183.08' – 3403.98'
220.9' – 235.9'	S	3168.08' – 3183.08'

Casing: C1 2" Flush Threaded Schedule 40 PVC
C2
Screen: S1 2" Flush Threaded Schedule 40 PVC, 0.010" Slot
S2

WELL DEVELOPMENT

WELL COMPLETION

Filter Pack: 217.8' – 235.8' BGS (7-1/2 50 lb. bags of 20-40 filtered Unimin silica sand)

Bentonite Seal: 75' – 217.8' BGS (44 ½-50 lb. Bags)

Grout Seal: 2 pours: 1st pour ; 17' – 75' BGS, 150 gallons water, 8-50 lb. bags Portland cement, and 2/3 50-lb. bag CETCO Super Gel. 2nd pour, 95 gallons of water, 4-50 lb. bags Portland cement, and 1/3-bag of CETCO Supergel.

COMMENTS: [1]All dates 2003. Hydrated chips with 10 gallons distilled water (75' – 217.8' BGS). On 9/20, added 17 bags of Bentonite chips from 1' – 17' BGS and hydrated with 5 gallons of distilled water. Centralizers at 51', 101', 151', and 201' BGS.

Site Name: LES EUNICE, N.M.

Supervised by: Edward E. High

Date: 11/19/03

LOCKWOOD GREENE\FINAL\03070\
F031119_WELL NO. MW-3.DOC

APPENDIX E

HYDRAULIC CONDUCTIVITY CALCULATIONS

COOK-JOYCE INC.

SHEET NO.___ OF___

PROJECT Lockwood Greene JOB NO. 03070 PREP. BY DG DATE 11/17/03

SUBJECT Hydraulic Slug Test Calc. CHKD. BY___ DATE___

PHASE/TASK___ APP. BY___ DATE___

TD = 285.5 FT
H = 120.5 FT
H_o = 44.72 FT
$H-H_o$ = 75.78 FT

Time (HRS)	DTW (FT)	h (FT)	$\frac{H-h}{H-H_o}$
0	190.78	44.72	1
24	165.04	70.46	0.66
48	153.85	81.65	0.51
72	149.68	85.82	0.46
96	148.67	86.83	0.44
168	138.71	96.79	0.31
192	135.11	100.39	0.27

$$K = \frac{r^2 \ln(L/R)}{2 L T_d}$$

$$= \frac{(0.083\ FT)^2 \ln(15\ FT / 0.25\ FT)}{2\ 15\ FT\ 130\ MIN}$$

$$= 7.2 \times 10^{-6}\ FT/MIN$$

$$= 3.7 \times 10^{-6}\ CM/SEC$$

$$= 3.78\ FT/YR$$

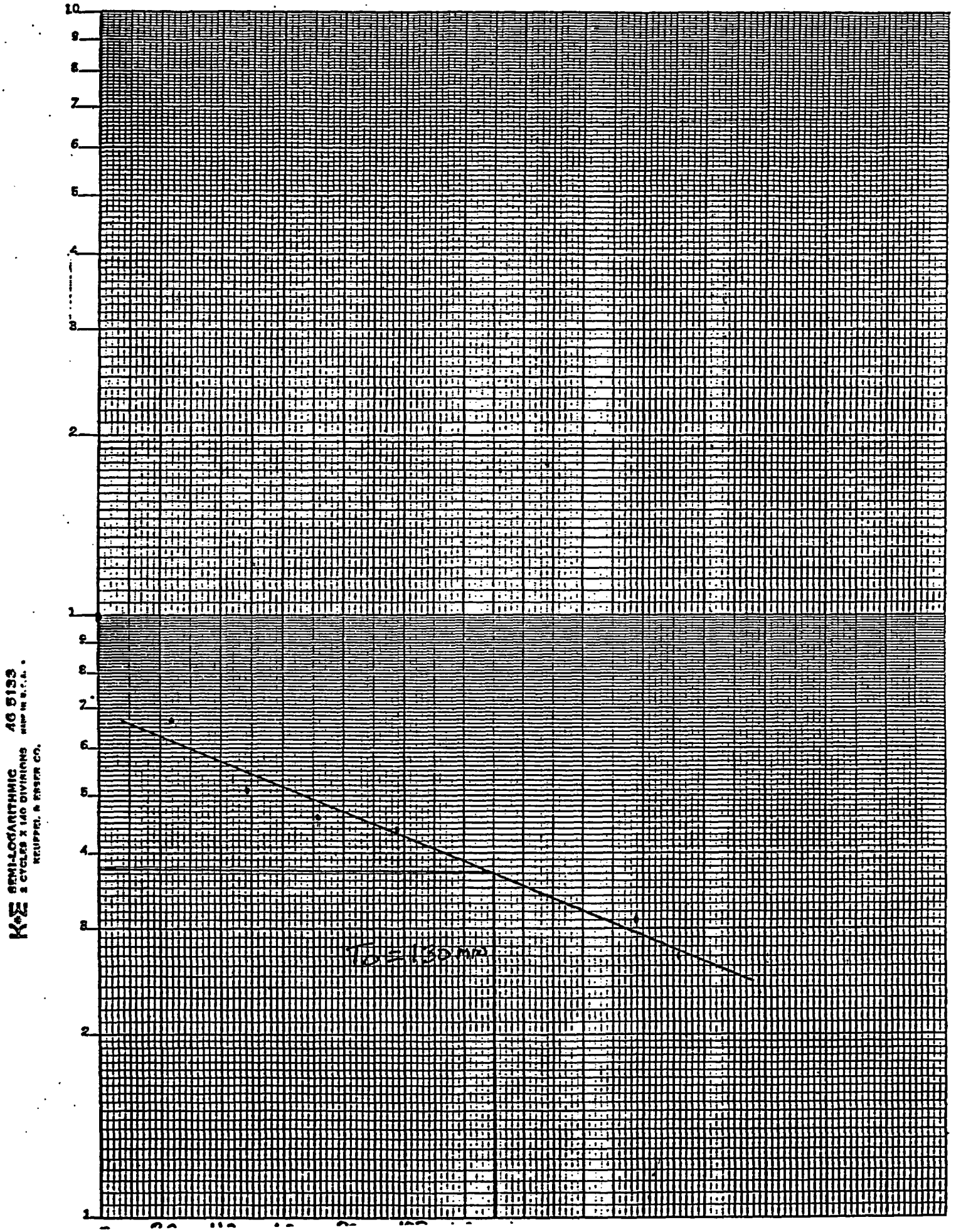
K+E SEMI-LOGARITHMIC 46 5133
2 CYCLES X 140 DIVISIONS
KEUFFEL & ESSER CO.
10
9
8
7
6
5
4
3
2
1
9
8
7
6
5
4
3
2
1
$I_D = 150$ mA

APPENDIX F

GROUNDWATER VELOCITY CALCULATIONS

COOK-JOYCE INC.

SHEET NO.____ OF____

PROJECT LOCKWOOD GREENE JOB NO. 03070 PREP. BY DG DATE 11/17/03

SUBJECT GROUNDWATER VELOCITY CALC. CHKD. BY____ DATE____

PHASE/TASK____ APP. BY____ DATE____

$$V = \frac{Ki}{n}$$

K = HYDRAULIC CONDUCTIVITY

i = HYDRAULIC GRADIENT

n = POROSITY

V = VELOCITY

K = 3.8 FT/YR

i = 0.011

n = 0.14

$$V = \frac{3.8\ FT/YR\ \ 0.011}{0.14}$$

V = 0.3 FT/YR

APPENDIX G

SURVEY RESULTS

DEBRA P. HICKS, P.E./L.S.I.
WILLIAM M. HICKS, III, P.E./P.S.

PETTIGREW and ASSOCIATES
1110 N. GRIMES
HOBBS, NEW MEXICO 88240
(505) 393-9827

23 September, 2003

Cook-Joyce Inc.
812 West Elevneth
Austin, Texas 78701-2000
Facsimile Number: 512-474-8463

ATTN: Ed Hughes / Doug Granger
RE: Location of monitoring wells and borehole locations within the LES site east of Eunice New Mexico.

Dear Mr. Granger:

Below I have tabulated the data you have requested for the borehole locations:

Borehole locations			
Northing	Easting	Elevation	Description
522969.203	925622.959	3396.49	BH-1
522906.403	927284.708	3402.31	BH-2
522941.969	928870.232	3403.38	BH-3
524232.996	925711.777	3400.66	BH-4
524273.953	927281.455	3408.85	BH-5
524346.448	928685.553	3414.75	BH-6
525545.025	925661.407	3415.00	BH-7
525604.689	927274.151	3423.29	BH-8
525735.902	928595.512	3421.33	BH-9

Additionally here is the data you requested for the three monitoring wells:

Monitoring Wells			
Northing	Easting	Elevation	Description
525569.741	925710.071	3418.31	MW-1 VAULT
		3418.37	MW-1 CASING
		3416.00	MW-1 CONC
		3415.44	MW-1 GRND
525770.200	928625.728	3425.11	MW-2 VAULT
		3425.25	MW-2 CASING
		3422.60	MW-2 CONC
		3422.14	MW-2 GRND
522989.922	928883.152	3406.97	MW-3 VAULT
		3406.98	MW-3 CASING
		3404.33	MW-3 CONC
		3403.98	MW-3 GRND

RE: Location of monitoring wells and borehole locations within the LES site east of Eunice New Mexico.

All observations were made from USC&GS Benchmark 12DD. We used real-time differentially corrected global positioning system observations at each location. Horizontal and vertical control values (X,Y,Z) at benchmark 12DD were derived from 3 continuously operating reference stations in the area. The above listed coordinates are referenced to New Mexico State Plane Coordinates Zone 3001 (NAD83), with the vertical referenced to NAVD(88). The X&Y values have been scaled to ground values.

Sincerely,
PETTIGREW and ASSOCIATES, P.A.

Daniel R. Muth, PS

ATTACHMENT D

DESCRIPTION OF LIQUID EFFLUENT COLLECTION TREATMENT SYSTEM

ATTACHMENT D
Ground Water Discharge Permit Application

D.1 Liquid Effluent Collection and Treatment System

Various types of aqueous and non-aqueous liquid wastes are generated in the facility. These effluents may be contaminated, potentially contaminated with low amounts of contamination, or non-contaminated.

A Liquid Effluent Collection and Treatment System is located in the Liquid Effluent Collection and Treatment Room in the Technical Services Building (TSB). A block flow diagram of the Liquid Effluent Collection and Treatment System is provided in Figure D-1. The Liquid Effluent Collection and Treatment System equipment location and arrangement is shown in Figure 3.5-29, Liquid Effluent Collection and Treatment Room, Equipment Arrangement. Non-contaminated aqueous effluents that are generated are collected, monitored for contamination, and discharged directly to the Treated Effluent Evaporative Basin (TEEB) if found to meet all regulatory and administrative requirements. Non-aqueous liquid wastes that are generated are collected and disposed of in accordance with all federal, state, and local regulations and in accordance with good and accepted industrial practice. All effluent collection, treatment, and disposal is done with respect to the safety of all personnel and in strict accordance with all federal, state, and local regulations. All contaminated effluents are handled to keep radiation doses to operating personnel and the public as low as reasonably achievable (ALARA).

D.1.1 Aqueous Liquid Effluents

Quantities of radiologically contaminated, potentially radiologically contaminated, and non-radiologically contaminated aqueous liquid effluents are generated in a variety of operations and processes in the TSB and in the Separations Building. All aqueous liquid effluents generated in the TSB are categorized as contaminated, potentially contaminated, or non-contaminated based on their uranic content. The majority of all potentially radiologically contaminated aqueous liquid effluents are generated in the TSB. All aqueous liquid effluents generated in the TSB are collected in tanks that are located in the Liquid Effluent Collection and Treatment Room in the TSB. The collected effluent is sampled and analyzed to determine if treatment is required before release to the TEEB.

D.1.1.1 System Description

D.1.1.1.1 Citric Acid

When the Citric Acid Tank in the Decontamination Workshop is drained, all the effluent is transferred to the Spent Citric Acid Collection Tank in the Liquid Effluent Collection and Treatment Room (see Figure 3.5-30, Process Flow Diagram, Spent Citric Acid). A "sludge" remains in the bottom of the Citric Acid Tank. This "sludge" consists primarily of uranium and metal particles. This sludge is flushed out with DI water. The combination of the sludge and the DI water also goes to the Spent Citric Acid Collection Tank. The spent citric acid effluent/sludge contains the wastes from the Sample Bottle and Flexible Hose Decontamination Cabinets, which are manually transferred to the Citric Acid Tank in the Decontamination System. The contents of the Spent Citric Acid Collection Tank are constantly agitated to keep all solids in suspension and to provide a homogeneous solution. This is necessary to prevent build-up of uranic material in the bottom of the tank.

D.1.1.1.2 Degreaser Water

When the Degreaser Tank in the Decontamination Workshop is drained, all the effluent is transferred to the Degreaser Water Collection Tank in the Liquid Effluent Collection and Treatment Room (see Figure 3.5-31, Process Flow Diagram, Degreaser Water). A "sludge" remains in the bottom of the Degreaser Tank after the degreasing water is drained. This "sludge" consists primarily of Fomblin oil and uranium. This sludge is flushed out with DI water. The combination of the sludge and the DI water also goes to the Degreaser Water Collection Tank. The contents of the Degreaser Water Collection Tank remain agitated to keep all solids in suspension and to provide a homogeneous solution. This is necessary to prevent build-up of uranic material in the bottom of the tank. Since this effluent contains Fomblin oil, it is not possible to send the degreaser water to the Precipitation Treatment Tank for treatment. Therefore, the Fomblin oil must be removed first.

For Fomblin oil removal, the contents of the Degreaser Water Collection Tank circulate through a small centrifuge. The oil and sludge are centrifuged off, collected in a container, and sent for offsite low-level waste disposal.

D.1.1.1.3 Laboratory Effluent

Aqueous laboratory effluents with uranic concentrations are sampled to determine their uranic content and then pumped from the labs to the agitated Miscellaneous Effluent Collection Tank in the Liquid Effluent Collection and Treatment Room (see Figure 3.5-32, Process Flow Diagram, Miscellaneous Effluent). Floor washings are sampled to determine their uranic content and then manually emptied into the Miscellaneous Effluent Collection Tank. Condensate may be either manually transported or pumped through piping to the tank after sampling.

D.1.1.1.4 Laundry

All washing machine water is discharged from the clothes washers to the Laundry Effluent Monitor Tanks in the Liquid Effluent Collection and Treatment Room (see Figure 3.5-33, Process Flow Diagram, Laundry Effluent). Due to the very low contamination of this effluent and the constant flow into these tanks, they are not agitated. Samples of the effluents are regularly taken to the laboratory for analysis. Lab testing determines pH, soluble uranic content, and insoluble uranic content. The analysis determines if the effluent meets regulatory requirements and administrative levels set prior to release into the TEEB. Previous operating experience indicates that the clothes washed contain very small amounts of UO_2F_2 and trace amounts of UF_4.

The laundry effluent is expected to meet the requirements mentioned above for release. If the effluent is determined to meet all the requirements, it is released to the TEEB. If the laboratory analysis shows it is not in conformance, then the effluent is held in one of the Laundry Effluent Monitor Tanks. Depending on the laboratory analysis, it can either be sent to the Precipitation Treatment Tank for processing through the treatment system, or it can be sent off-site for treatment and disposal as low-level waste.

D.1.1.1.5 Washes and Showers

All water from the personnel hand washes and showers in the TSB, Separations Building Modules, Blending and Liquid Sampling Area, and the Centrifuge Test and Post Mortem Areas

goes to the Hand Wash / Shower Monitor Tanks in the Liquid Effluent Collection and Treatment Room (see Figure 3.5-34, Process Flow Diagram, Hand Wash/Shower Effluent). Since these effluents are expected to be non-contaminated, there is no need to provide agitation in these tanks. Samples of the effluents are regularly taken to the laboratory for analysis. Lab testing determines pH, soluble uranic content, and insoluble uranic content. The analysis determines if the effluent meets all federal, state, and local requirements in addition to administrative levels set prior to release to the TEEB. If it is determined the effluent meets all the requirements, it is released to the TEEB. There is little probability these effluents are contaminated. Therefore, it is assumed the effluent always meets the requirements for release to the TEEB. No provisions are provided for any treatment of these effluents.

D.1.1.1.6 Precipitation Treatment Tank

When a batch has been added to, processed at, sampled at, and analyzed at the Spent Citric Acid Collection Tank, Degreaser Water Collection Tank, or Miscellaneous Effluent Collection Tank, the contents are transferred to the Precipitation Treatment Tank.

The Precipitation Treatment Tank (see Figure 3.5-35, Process Flow Diagram, Precipitation/ Treatment) is used to remove the majority of the uranium that is in solution. After the effluent is transferred to the Precipitation Treatment Tank, a precipitating agent, such as potassium hydroxide (KOH) or sodium hydroxide (NaOH), is added. The addition of the precipitating agent raises the pH of the effluent to the range of 9 to 12. This makes the soluble uranium compounds become insoluble compounds that precipitate from the solution. The tank contents are constantly agitated to provide a homogeneous solution. The precipitated compounds are then removed from the effluent by circulation through a small filter press. The material removed by the filter press is deposited in a container and sent for off-site low-level waste disposal.

The clean effluent from the filter press is re-circulated back to the Precipitation Treatment Tank. Depending on the characteristics of the effluent and the filter press design, the effluent may have to be circulated through the filter press numerous times to obtain the percent of solids removal required. A sample of the effluent is taken to determine when the correct amount of solids has been removed. When it is determined that the correct amount of solids have been removed, the effluent is transferred to the Contaminated Effluent Hold Tank.

D.1.1.1.7 Contaminated Effluent Hold Tank

The effluent in the Contaminated Effluent Hold Tank is transferred to the agitated Evaporator/Dryer Feed Tank (see Figure 3.5-36, Process Flow Diagram, Evaporator/Dryer). Acid is added via a small chemical addition unit to reduce the pH back down to 7 or 8. This is necessary to help minimize corrosion in the Evaporator/Dryer.

D.1.1.1.8 Evaporator/Dryer Feed Tank and Evaporator/Dryer

From the Evaporator/Dryer Feed Tank, the effluent is pumped to the Evaporator/Dryer. The Evaporator/Dryer is an agitated thin film type that separates out the solids in the effluent. The Evaporator/Dryer is heated by steam (generated by an electric boiler in the room) in a jacket or from an electric coil. As the effluent enters the Evaporator/Dryer, the effluent is heated, and the water is vaporized. The Evaporator/Dryer discharges a "dry" concentrate into a container located at the bottom of the Evaporator/Dryer. Container contents are monitored for criticality, labeled, and stored in the radioactive waste storage area. When full, the container is sent for shipment off-site to a licensed radioactive waste disposal facility. Liquid vapor exits the

evaporator and is condensed in the Evaporator/Dryer Condenser, which is cooled with process chilled water.

The condensate from the condenser is collected in the Distillate Tank before being transferred to one of the Treated Effluent Monitor Tanks (see Figure 3.5-37, Process Flow Diagram, Treated Effluent Polishing). The effluent in these tanks is sampled and tested for pH and uranic content to validate compliance with regulatory and administrative guidelines prior to release to the TEEB. If the effluent test results are acceptable, then it is released to the TEEB. However, if the lab tests show the effluent does not meet regulatory and administrative guidelines, the effluent can be further treated. Depending on what conditions the lab testing show, the effluent is either directed back to the Evaporator/Dryer Feed Tank for another pass through the Evaporator/Dryer, or it can be directed through the Mixed Bed Demineralizers. After either option, the effluent is transferred back to a Treated Effluent Monitor Tank where it is again tested. When the lab tests are acceptable, the effluent is released to the TEEB.

D.1.1.2 Major Components

Handling and eventual disposition of the aqueous liquid effluents is accomplished in two stages, collection and treatment. All aqueous liquid effluents are collected in tanks that are located in the Liquid Effluent Collection and Treatment Room in the TSB.

Table 3.5-9, Liquid Effluent Collection and Treatment System, Collection Tanks, lists the collection tanks, their respective sizes, and the effluents deposited into them.

In addition to the listed tanks, which are used for effluent collection from the various areas throughout the plant, there are other tanks in the Liquid Effluent Collection and Treatment Room used for monitoring and treatment prior to release of the effluents to the TEEB.

These tanks, their size, and their purpose are listed in Table 3.5-10, Liquid Effluent Collection and Treatment System, Monitoring and Treatment Tanks.

D.1.1.3 Safety Considerations

Equipment for effluent collection and treatment in the Liquid Effluent Collection and Treatment Room in the TSB are separated into various radiological zones depending on contamination levels. The Laundry Effluent Tanks and the Wash/Shower Tanks are generally non-contaminated (or contain very low levels of uranium) and are located together in one corner of the room. The tanks with higher contamination are located in the opposite corner of the room. This separation helps keep exposures to ALARA (as low as reasonably achievable.) All tanks have overflow piping and atmospheric vents. The tanks also have inspection hatches to ensure that they are completely empty after a batch has been processed.

Tank contents are sampled and analyzed before being transferred to another tank or out of the system. Bookkeeping measures ensure that no tank holds more than a safe mass of uranium.

The Spent Citric Acid Collection Tank, Degreaser Water Collection Tank, Miscellaneous Effluent Collection Tank, and Precipitation Treatment Tank are all located in a contained area. The containment consists of a curb around all the above-mentioned tanks. The curbed area is capable of containing at least one catastrophic failure of one tank (1325 L (350 gal), minimum). In the event of a tank failure, the effluent in the confined area is pumped out with a portable pump set.

Due to the low probability of a uranic contamination in the Laundry Effluent Tanks or the Hand Wash/Shower Monitor Tanks, no curbed confinement of these tanks is provided in the event of a catastrophic failure. Any small amounts of these effluents that leak onto the floor drain to a floor sump. The effluents in this sump are pumped out with a portable pump set.

D.1.1.4 Operating Characteristics

The pH of the Dryer Feed Tank is important to minimize the corrosion in the equipment. The pH is always maintained within the manufacturer's recommended range.

Aqueous radiologically contaminated liquid effluents are processed on-site to remove the uranic content. After treatment these effluents and all non-contaminated aqueous effluents are discharged to the TEEB. Reduced volume, radiologically contaminated wastes that are produced as a by-product of the treatment system, as well as contaminated non-aqueous wastes, are packaged and shipped to a licensed radioactive waste disposal facility.

D.1.1.5 Design Considerations

The Liquid Effluent Collection and Treatment System and the system to collect non-aqueous wastes are sized to process effluents generated in an average year under normal conditions. The systems are designed with some extra capacity to handle upset or abnormal volumes. In the event of a catastrophic failure of the treatment system, provisions can be made to send all effluent off-site to a licensed processing and waste disposal facility.

All piping and equipment in the system that could contain potentially radioactive fluids are constructed of appropriate corrosion resistant metallic or plastic materials. None of the effluents are of such a chemical nature that special materials of construction is necessary. Industrial-grade piping and equipment is used.

All process piping is designed in accordance with American Society of Mechanical Engineers, ASME B31.3-2002, Process Piping (ASME, 2002). To provide system integrity and prevent leaks, welded construction is used everywhere practical. All collection tanks are designed in accordance with American Water Works Association (AWWA), American Petroleum Institute (API), or ASME Standards. The tanks are vertical cylindrical tanks with conical or dished-head bottoms to promote drainage. All outlets are at the low point of the tank – no space exists for solids to accumulate. All tank vents are open to atmosphere and directed away from personnel/equipment; all tank overflows are directed to sumps or do not pose a serious hazard. All tanks have inspection hatches to ensure the tanks are emptied. Mixers or recirculation loops are provided for each tank that requires mixing prior to sampling to ensure that each sample is representative of the tank contents.

D.1.2 Non-Aqueous Liquid Effluents

Various non-aqueous liquid effluents are generated throughout the plant. The majority of these are non-radiologically contaminated and are generated outside areas in which radioactive materials are handled. A small percentage may be radiologically contaminated. These wastes are ones that cannot be collected and treated in the Liquid Effluent Collection and Treatment System because of their chemical characteristics (i.e., they cannot be processed through the system because they might damage or decrease the performance of the equipment in the treatment system). These chemicals also might be EPA hazardous chemicals that cannot enter the aqueous waste stream that goes to the TEEB. Special treatment and/or disposal methods

are required for these wastes. They are not mixed with any of the effluent streams in the Liquid Effluent Collection and Treatment System.

Table 3.5-9 Liquid Effluent Collection and Treatment System, Collection Tanks
Page 1 of 1

TANK	QUANTITY	SIZE L (gal)	CONTENTS
Spent Citric Acid Collection	1	1,325 (350)	Spent citric acid
Degreaser Water Collection	1	1,325 (350)	Used degreaser water
Miscellaneous Effluent Collection	1	1,325 (350)	Lab wastes, condensate, floor washings
Hand Wash/Shower Monitor	3	15,142 (4,000)	Water from the active areas hand washes and showers
Laundry Effluent Monitor	3	3,785 (1,000)	Washing machine water

Table 3.5-10 Liquid Effluent Collection and Treatment System, Monitoring and Treatment Tanks

Page 1 of 1

TANK	QUANTITY	SIZE L (gal)	PURPOSE
Precipitation Treatment	1	1,325 (350)	Receives and treats effluents from the Citric Acid Collection Tank, the Degreaser Water Collection Tank, and, the Miscellaneous Effluent Hold Tank.
Contaminated Effluent Hold	1	1,325 (350)	Receives effluent from the Precipitation Treatment Tank. Provides capacity for the effluent batches processed in the Precipitation Treatment Tank.
Evaporator/Dryer Feed	1	1,325 (350)	Receives effluent from the Contaminated Effluent Hold Tank. Provides holding capacity for the effluent batches to be processed in the Evaporator/Dryer. pH is adjusted (lowered) in this tank prior to evaporation / drying.
Distillate	1	1,325 (350)	Receives effluent from the Evaporator/ Dryer.
Treated Effluent Monitor	2	1,325 (350)	Receives effluent from Evaporator/Dryer Distillate Tank. Effluent is sampled and tested in these tanks prior to release to the TEEB or treatment in the polishing demineralizers.

NOTES:

1. LAUNDRY EFFLUENT CAN BE TREATED THROUGH THE TREATMENT SYSTEM IF NECESSARY. NORMAL OPERATION IS DISCHARGE TO THE BASIN AFTER ANALYSIS.
2. TREATED EFFLUENT DISCHARGED TO THE TREATED EFFLUENT MONITOR TANKS CAN BE RAN THROUGH THE POLISHING DEMINERALIZERS OR TO THE EVAPORATOR/DRYER FEED TANK PRIOR TO DISCHARGE TO THE BASIN. NORMAL OPERATION IS DISCHARGE TO THE BASIN WITHOUT RUNNING THROUGH THE DEMINERALIZERS AFTER ANALYSIS.

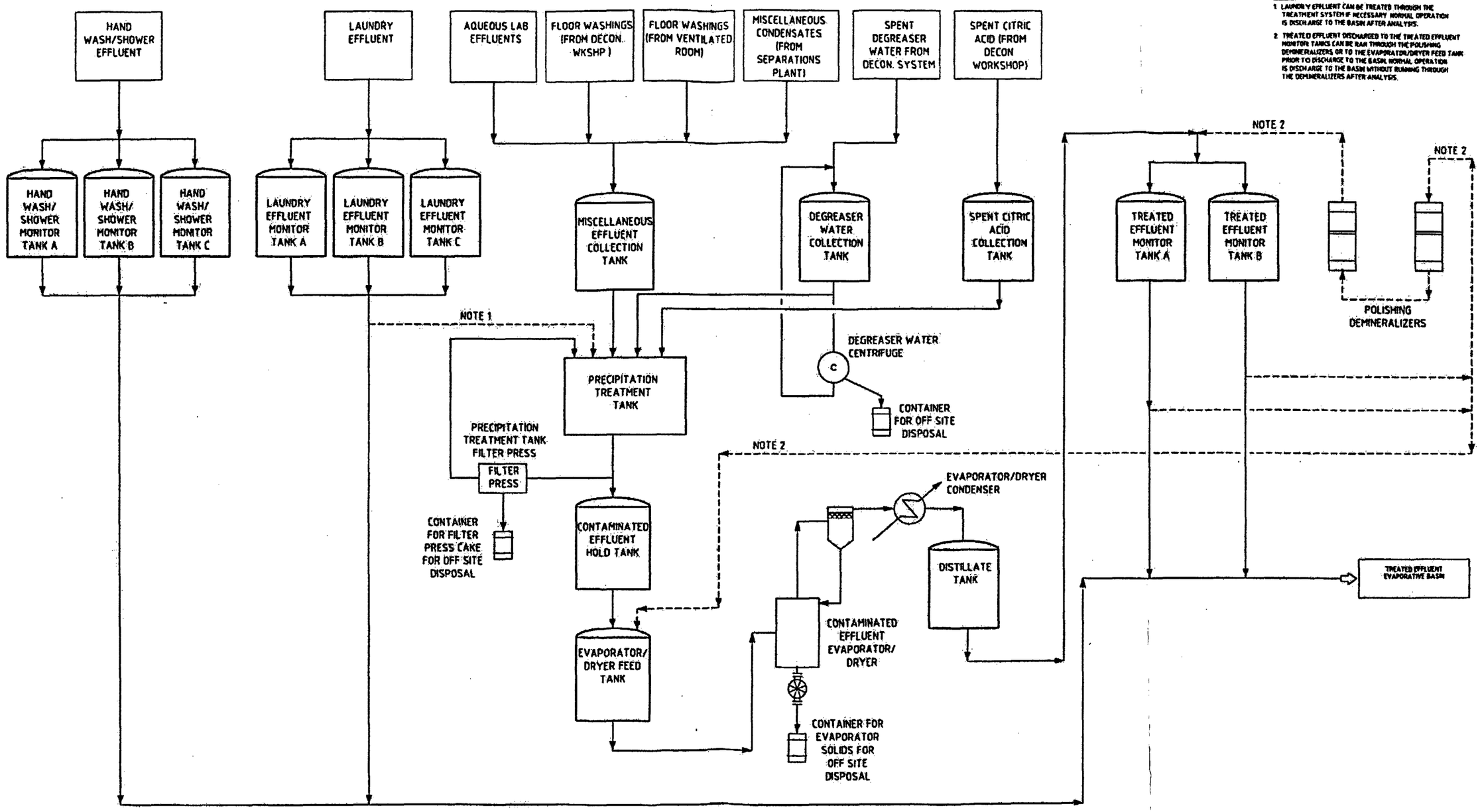

FIGURE D-1

NO	DATE	REVISION	BY	CK	APPR
A	03/22/94	ISSUED FOR PERMIT APPLICATION	RC	SHR	RC

DRAWN BY: R. CAMPBELL
CHECKED BY: S. ROGERS
APPR. BY: R. CAMPBELL
CLIENT APPR. N/A

LOCKWOOD GREENE
ENGINEERING & CONSTRUCTION
Spartanburg, South Carolina

SHEET TITLE: BLOCK FLOW DIAGRAM LIQUID EFFLUENT COLLECTION AND TREATMENT SYSTEM

LOUISIANA ENERGY SERVICES

JOB NO. 010391.00
FILENAME 0000-R-1001.DWG
SCALE NONE
REV. NO. A
SHEET REV. NO.
DWG. NO. 0000-R-1001

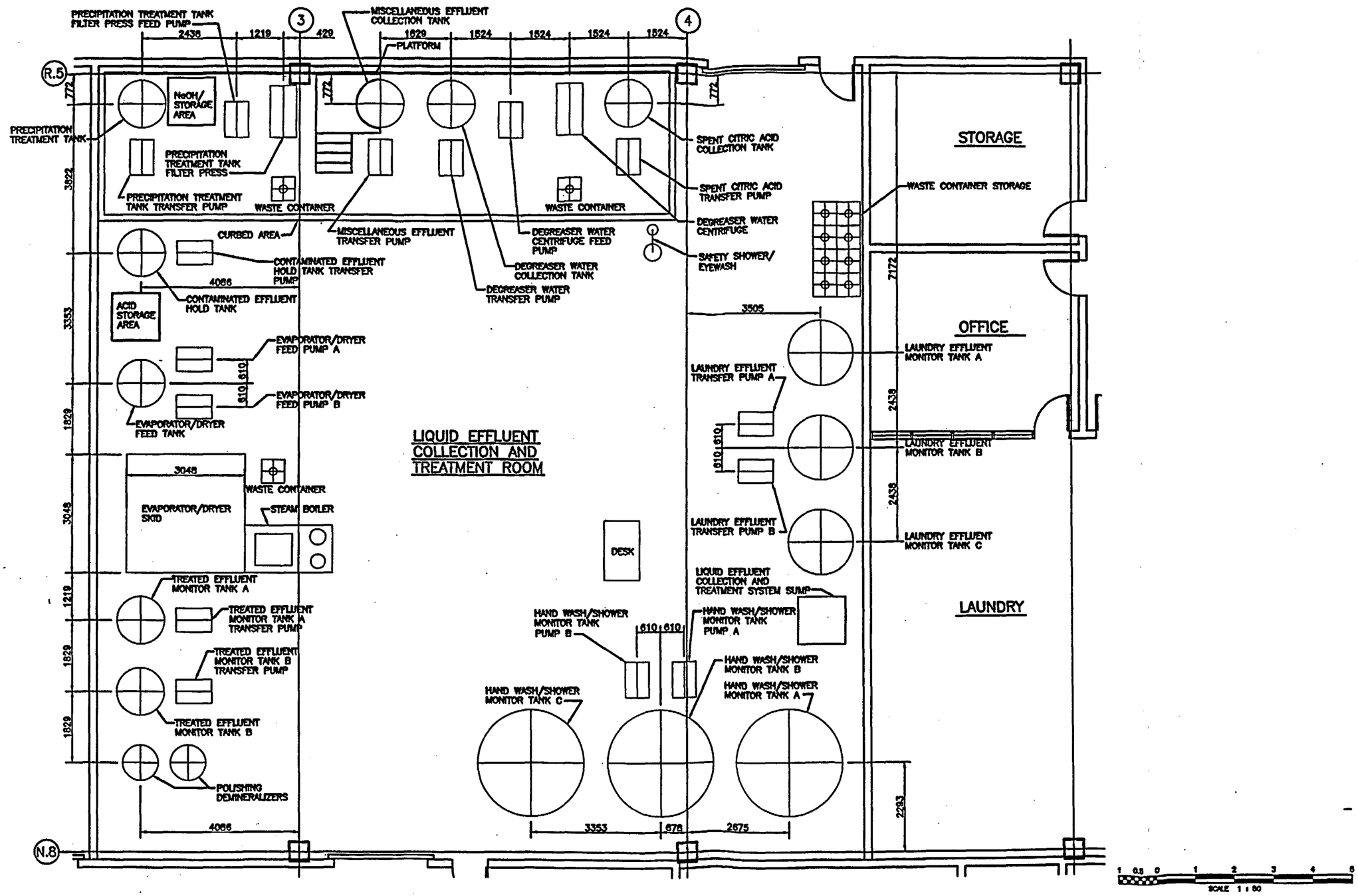

LOCKWOOD GREENE
ENGINEERING & CONSTRUCTION

REFERENCE NUMBER
1500-R-2500

FIGURE 3.5-29
LIQUID EFFLUENT COLLECTION AND TREATMENT ROOM EQUIPMENT ARRANGEMENT
REVISION DATE: DECEMBER 2003

NOTES:

1. THIS STREAM IS OPERATED IN A "BATCH" MODE.
2. HOSE CONNECTION CAN BE USED FOR DIKE PUMP-OUT OR DEIONIZED WATER WASHOUT.
3. PUMPED CONTENTS INCLUDE WASTE FROM SAMPLE BOTTLE AND FLEXIBLE HOSE DECONTAMINATION THAT WERE MANUALLY TRANSFERRED TO CITRIC ACID TANK IN DECONTAMINATION SYSTEM.

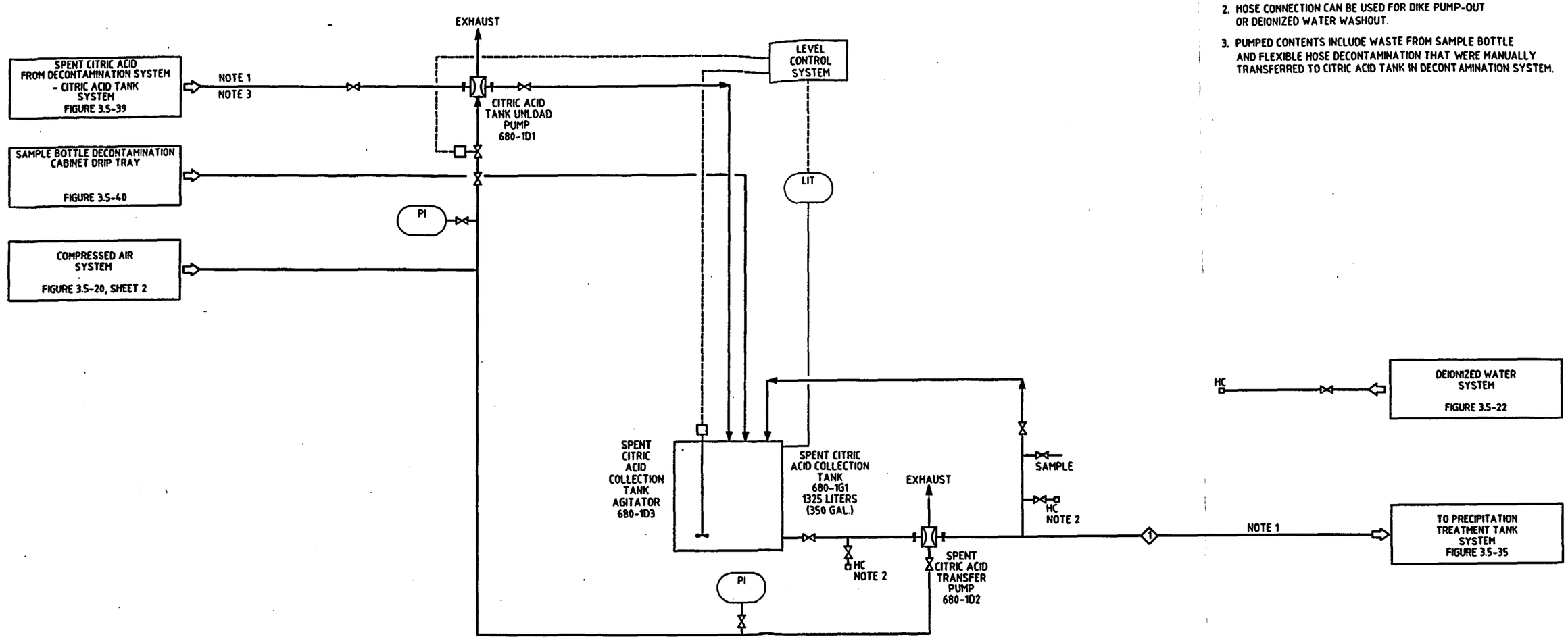

STREAM No.	①
ANNUAL FLUID QUANTITY, l/yr	2720
gal/yr	720
ANNUAL URANIC QUANTITY, Kg/yr	22
lb/yr	48.5
BATCH FLUID QUANTITY, l	999
gal	261

LOCKWOOD GREENE
ENGINEERING & CONSTRUCTION

REFERENCE NUMBER
1500-R-1101

FIGURE 3.5-30
PROCESS FLOW DIAGRAM
SPENT CITRIC ACID

REVISION DATE: DECEMBER 2003

NOTES:

1. THIS STREAM IS OPERATED IN A "BATCH" MODE.
2. HOSE CONNECTION CAN BE USED FOR DIKE PUMP-OUT OR DEIONIZED WATER WASHOUT.
3. TOTAL ANNUAL SLUDGE DISCHARGES FROM THE DEGREASER WATER CENTRIFUGE, PRECIPITATION TREATMENT TANK FILTER PRESS, AND CONTAMINATED EFFLUENT EVAPORATOR/DRYER ARE ESTIMATED TO BE 400 KG (882 LB) OF SOLIDS, INCLUDING 57 KG (126 LB) OF URANIUM.
4. URANIC CONTENT REMOVED BY THE CENTRIFUGE TO BE DETERMINED DURING FINAL DESIGN (SEE NOTE 3 ABOVE).

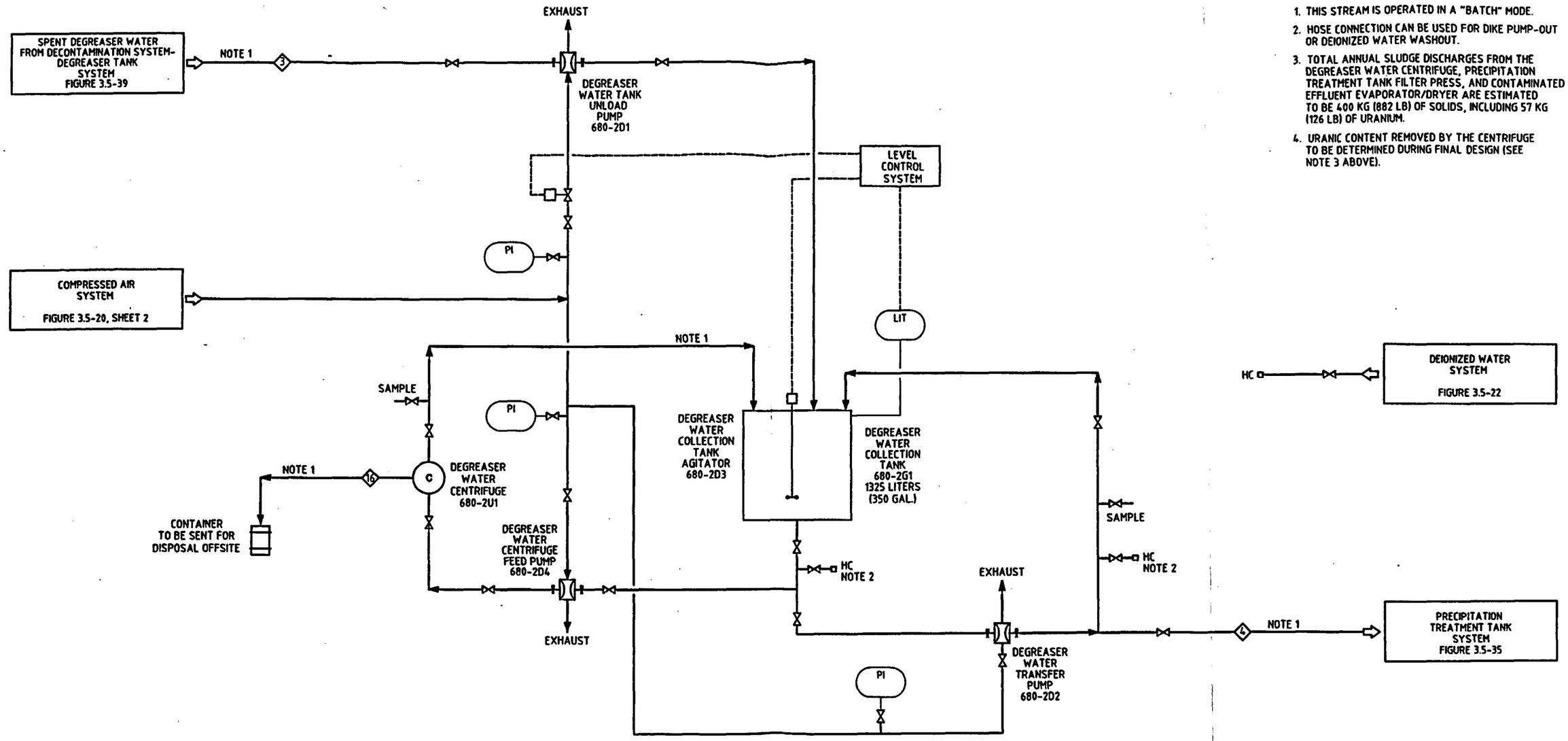

STREAM No.	3	4	16
ANNUAL FLUID QUANTITY, l/yr	3710	3710	
gal/yr	980	980	
ANNUAL URANIC QUANTITY, Kg/yr	18.5	NOTE 4	NOTE 3
lb/yr	40.8	NOTE 4	NOTE 3
BATCH FLUID QUANTITY, l	989	989	
gal	261	261	

LOCKWOOD GREENE
ENGINEERING & CONSTRUCTION

REFERENCE NUMBER
1500-R-1102

FIGURE 3.5-31
PROCESS FLOW DIAGRAM
DEGREASER WATER

REVISION DATE: DECEMBER 2003

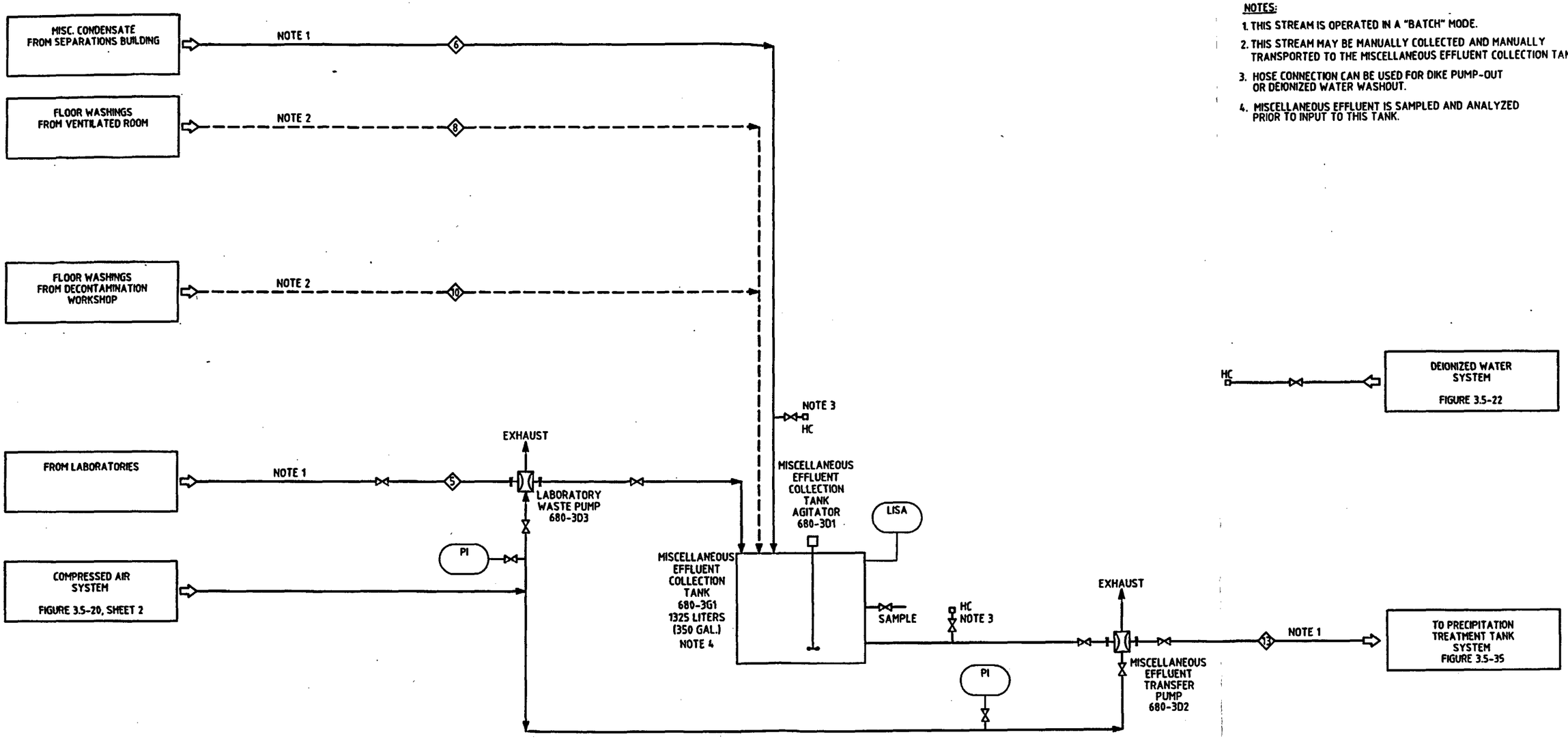

NOTES:

1. THIS STREAM IS OPERATED IN A "BATCH" MODE.
2. THIS STREAM MAY BE MANUALLY COLLECTED AND MANUALLY TRANSPORTED TO THE MISCELLANEOUS EFFLUENT COLLECTION TANK.
3. HOSE CONNECTION CAN BE USED FOR DIKE PUMP-OUT OR DEIONIZED WATER WASHOUT.
4. MISCELLANEOUS EFFLUENT IS SAMPLED AND ANALYZED PRIOR TO INPUT TO THIS TANK.

STREAM No.	5	6	8	10	13
ANNUAL FLUID QUANTITY, l/yr	20615	2400	40	80	23135
gal/yr	5446	634	10.6	21.1	6112
ANNUAL URANIC QUANTITY, Kg/yr	16	NONE	TRACE	TRACE	16
lb/yr	35.3	NONE	TRACE	TRACE	35.3
BATCH FLUID QUANTITY, l	56.5	6.6	20	40	
gal	14.9	1.74	5.28	10.6	

LOCKWOOD GREENE ENGINEERING & CONSTRUCTION

REFERENCE NUMBER 1500-R-1103

FIGURE 3.5-32
PROCESS FLOW DIAGRAM
MISCELLANEOUS EFFLUENT

REVISION DATE: DECEMBER 2003

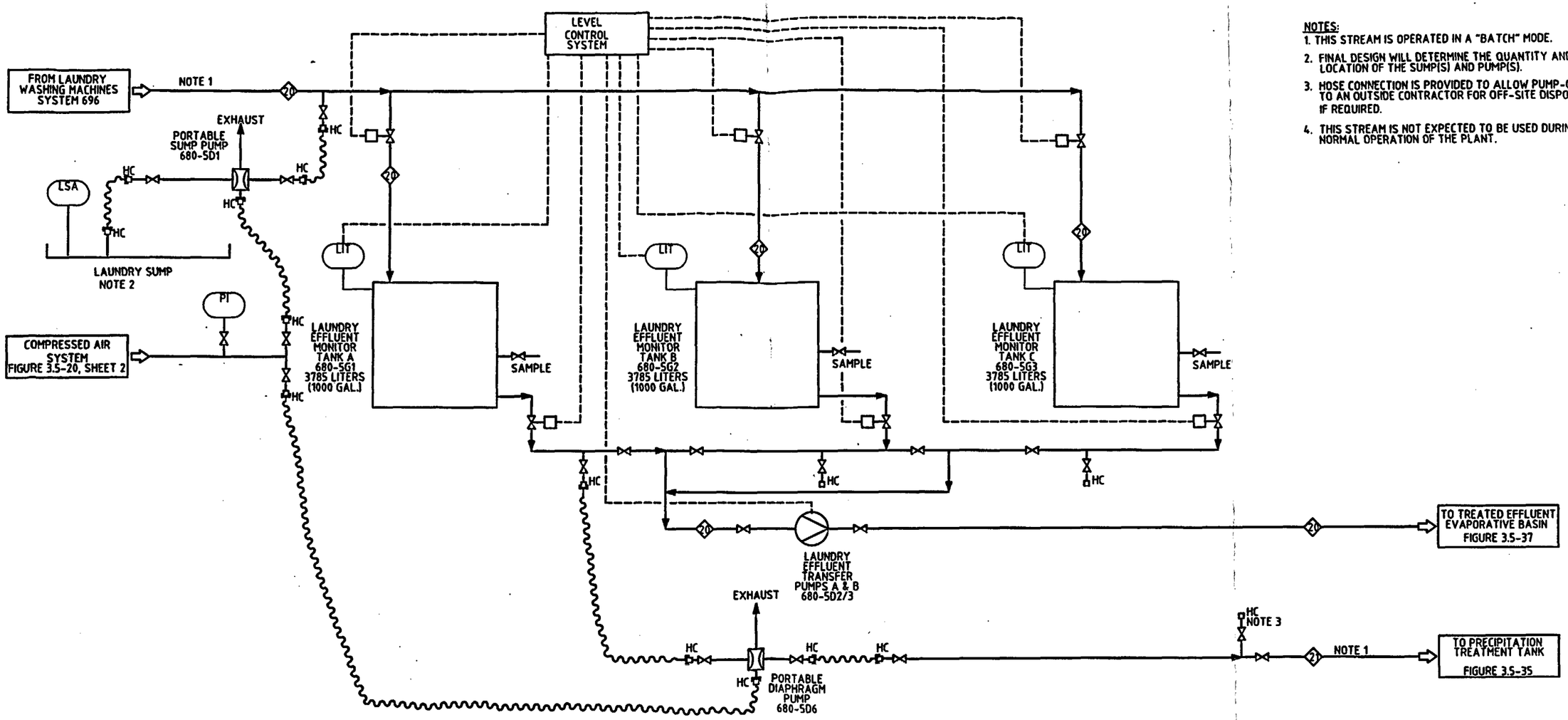

NOTES:
1. THIS STREAM IS OPERATED IN A "BATCH" MODE.
2. FINAL DESIGN WILL DETERMINE THE QUANTITY AND LOCATION OF THE SUMP(S) AND PUMP(S).
3. HOSE CONNECTION IS PROVIDED TO ALLOW PUMP-OUT TO AN OUTSIDE CONTRACTOR FOR OFF-SITE DISPOSAL, IF REQUIRED.
4. THIS STREAM IS NOT EXPECTED TO BE USED DURING NORMAL OPERATION OF THE PLANT.

STREAM No.	20	21
ANNUAL FLUID QUANTITY, l/yr	405,802	0
gal/yr	107,213	0
ANNUAL URANIC QUANTITY, Kg/yr	0.2	0
lb/yr	0.441	0
BATCH FLUID QUANTITY, l		0
gal		0
		NOTE 4

LOCKWOOD GREENE
ENGINEERING & CONSTRUCTION

REFERENCE NUMBER
1500-R-1105

FIGURE 3.5-33
PROCESS FLOW DIAGRAM
LAUNDRY EFFLUENT

REVISION DATE: DECEMBER 2003

NOTES:

1. THIS STREAM IS OPERATED IN A "BATCH" MODE.
2. SUMP DESIGNED TO PREVENT ADDITION OF MISCELLANEOUS EFFLUENTS.

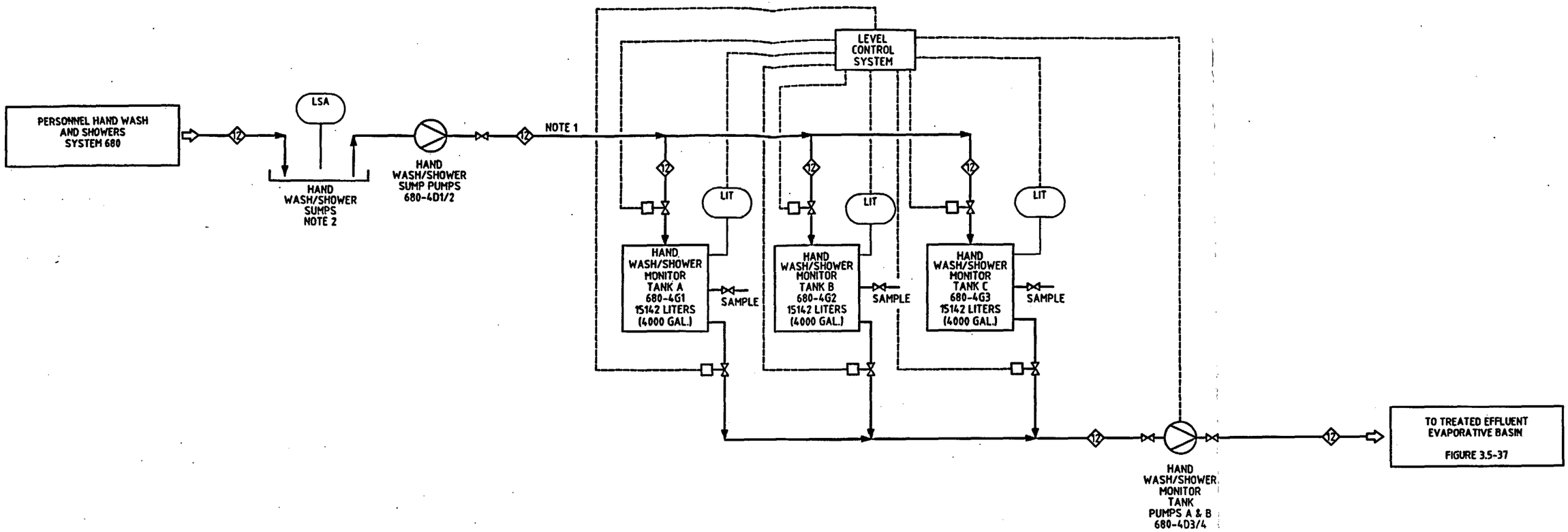

STREAM No.	12
ANNUAL FLUID QUANTITY, l/yr	2,100,000
gal/yr	554,820
ANNUAL URANIC QUANTITY, Kg/yr	NONE
lb/yr	NONE
BATCH FLUID QUANTITY, l	5753
gal	1520

LOCKWOOD GREENE ENGINEERING & CONSTRUCTION

REFERENCE NUMBER 1500-R-1104

FIGURE 3.5-34

PROCESS FLOW DIAGRAM HAND WASH/SHOWER EFFLUENT

REVISION DATE: DECEMBER 2003

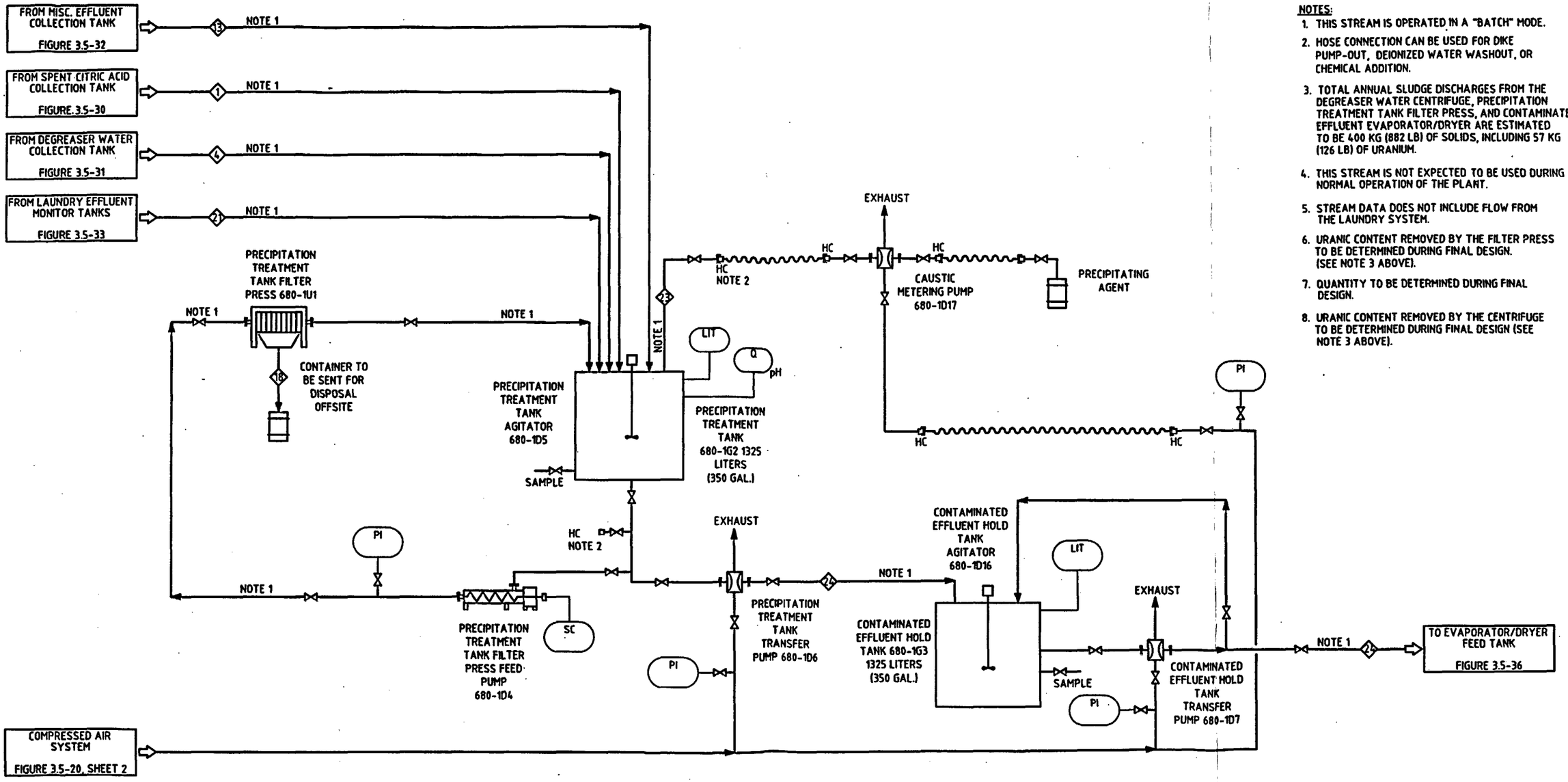

NOTES:

1. THIS STREAM IS OPERATED IN A "BATCH" MODE.
2. HOSE CONNECTION CAN BE USED FOR DIKE PUMP-OUT, DEIONIZED WATER WASHOUT, OR CHEMICAL ADDITION.
3. TOTAL ANNUAL SLUDGE DISCHARGES FROM THE DEGREASER WATER CENTRIFUGE, PRECIPITATION TREATMENT TANK FILTER PRESS, AND CONTAMINATED EFFLUENT EVAPORATOR/DRYER ARE ESTIMATED TO BE 400 KG (882 LB) OF SOLIDS, INCLUDING 57 KG (126 LB) OF URANIUM.
4. THIS STREAM IS NOT EXPECTED TO BE USED DURING NORMAL OPERATION OF THE PLANT.
5. STREAM DATA DOES NOT INCLUDE FLOW FROM THE LAUNDRY SYSTEM.
6. URANIC CONTENT REMOVED BY THE FILTER PRESS TO BE DETERMINED DURING FINAL DESIGN. (SEE NOTE 3 ABOVE).
7. QUANTITY TO BE DETERMINED DURING FINAL DESIGN.
8. URANIC CONTENT REMOVED BY THE CENTRIFUGE TO BE DETERMINED DURING FINAL DESIGN (SEE NOTE 3 ABOVE).

STREAM No.	1	4	13	18	21	23	24
ANNUAL FLUID QUANTITY, l/yr	2720	3710	23135		0	NOTE 7	29,565
gal/yr	719	980	6112		0		7811
ANNUAL URANIC QUANTITY, Kg/yr	22	NOTE 8	16	NOTE 3	0		NOTE 6
lb/yr	48.5	NOTE 8	35.3		0		NOTE 6
BATCH FLUID QUANTITY, l	989	989			0		
gal	261	261			0		
					NOTE 4		NOTE 5

LOCKWOOD GREENE ENGINEERING & CONSTRUCTION

REFERENCE NUMBER 1500-R-1106

FIGURE 3.5-35

PROCESS FLOW DIAGRAM PRECIPITATION/TREATMENT

REVISION DATE: DECEMBER 2003

NOTES:

1. THIS STREAM IS OPERATED IN A "BATCH" MODE.
2. TOTAL ANNUAL SLUDGE DISCHARGES FROM THE DEGREASER WATER CENTRIFUGE, PRECIPITATION TREATMENT TANK FILTER PRESS, AND CONTAMINATED EFFLUENT EVAPORATOR/DRYER ARE ESTIMATED TO BE 400 KG (882 LB) OF SOLIDS, INCLUDING 57 KG (126 LB) OF URANIUM.
3. URANIC CONTENT REMOVED BY THE FILTER PRESS TO BE DETERMINED DURING FINAL DESIGN. (SEE NOTE 2 ABOVE).
4. STREAM DATA DOES NOT INCLUDE FLOW FROM THE LAUNDRY SYSTEM.
5. URANIC CONTENT REMOVED BY THE EVAPORATOR/DRYER TO BE DETERMINED DURING FINAL DESIGN. (SEE NOTE 2 ABOVE).
6. THIS STREAM IS NOT EXPECTED TO BE USED DURING NORMAL OPERATION OF THE PLANT.
7. QUANTITY TO BE DETERMINED DURING FINAL DESIGN.

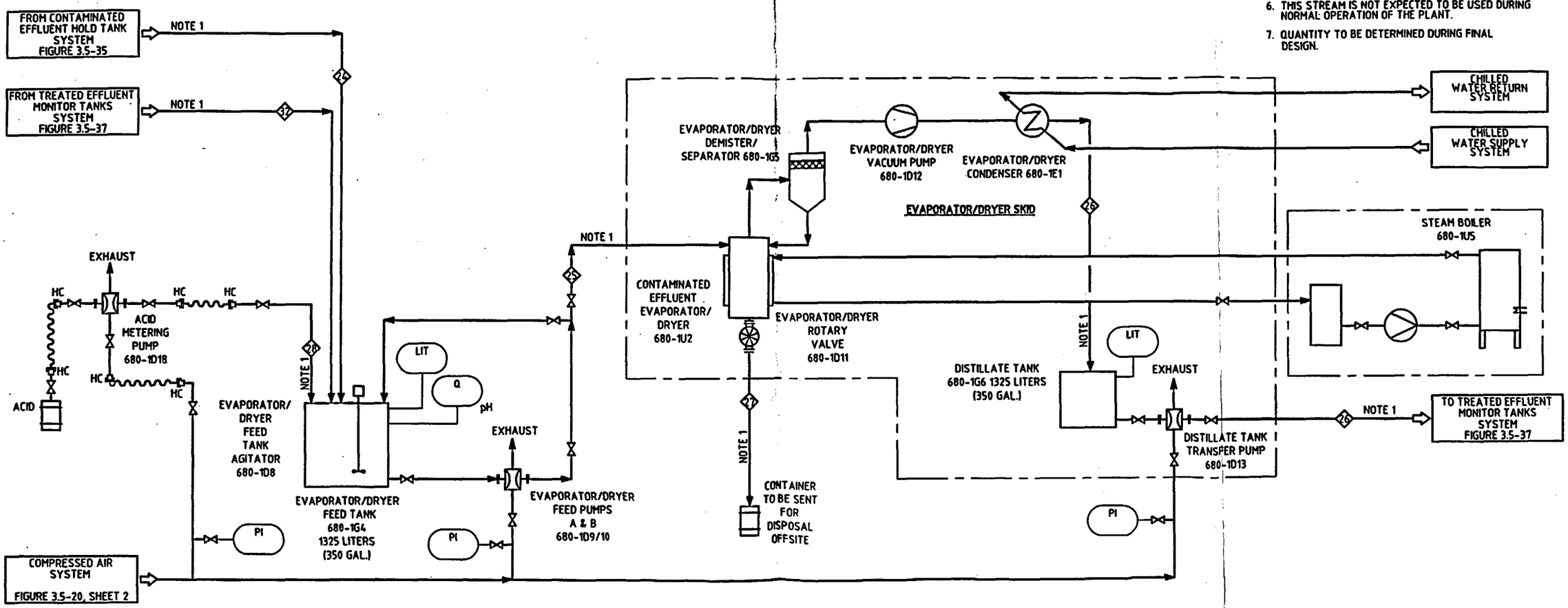

STREAM No.	24	25	26	27	28	32
ANNUAL FLUID QUANTITY, l/yr	29,565	29,565	29,565		NOTE 7	0
gal/yr	7811	7811	7811		NOTE 7	0
ANNUAL URANIC QUANTITY, Kg/yr	NOTE 3		NOTE 5	NOTE 2		0
lb/yr	NOTE 3		NOTE 5	NOTE 2		0
BATCH FLUID QUANTITY, l						0
gal						0
		NOTE 4	NOTE 4			NOTE 6

LOCKWOOD GREENE ENGINEERS & CONSTRUCTION

REFERENCE NUMBER 1500-R-1107

FIGURE 3.5-36

PROCESS FLOW DIAGRAM EVAPORATOR/DRYER

REVISION DATE: DECEMBER 2003

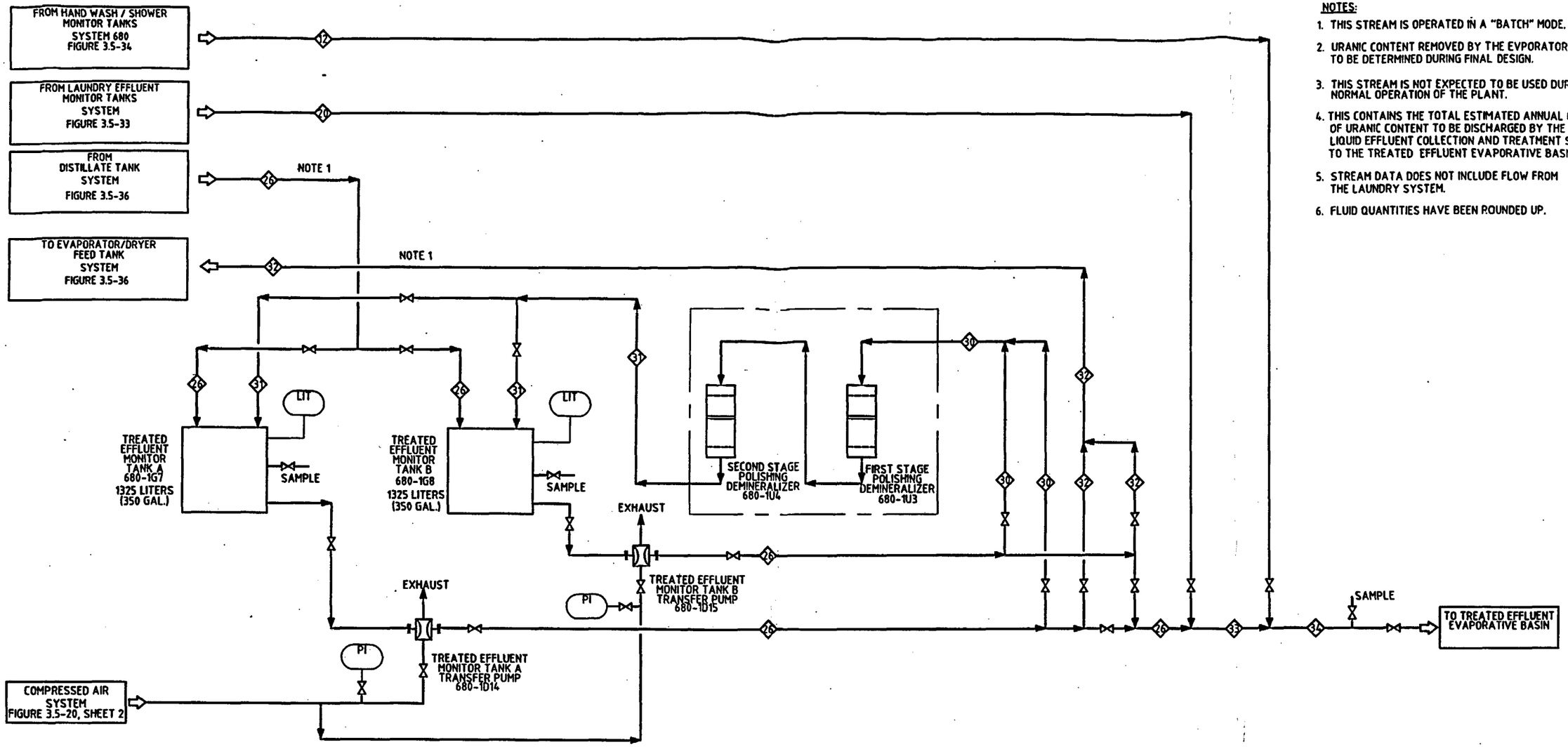

NOTES:

1. THIS STREAM IS OPERATED IN A "BATCH" MODE.
2. URANIC CONTENT REMOVED BY THE EVPORATOR/DRYER TO BE DETERMINED DURING FINAL DESIGN.
3. THIS STREAM IS NOT EXPECTED TO BE USED DURING NORMAL OPERATION OF THE PLANT.
4. THIS CONTAINS THE TOTAL ESTIMATED ANNUAL QUANTITY OF URANIC CONTENT TO BE DISCHARGED BY THE LIQUID EFFLUENT COLLECTION AND TREATMENT SYSTEM TO THE TREATED EFFLUENT EVAPORATIVE BASIN.
5. STREAM DATA DOES NOT INCLUDE FLOW FROM THE LAUNDRY SYSTEM.
6. FLUID QUANTITIES HAVE BEEN ROUNDED UP.

STREAM No.	12	20	26	30	31	32	33	34
ANNUAL FLUID QUANTITY, l/yr	2,100,000	405,802	29,565	0	0	0	435,400	2,535,400
gal/yr	554,820	107,213	7811	0	0	0	115,033	669,853
ANNUAL URANIC QUANTITY, Kg/yr	NONE	0.2	NOTE 2	0	0	0	0.57	0.57
lb/yr	NONE	0.441	NOTE 2	0	0	0	1.26	1.26
BATCH FLUID QUANTITY, l	5753			0	0	0		
gal	1520			0	0	0		
			NOTE 5	NOTE 3	NOTE 3	NOTE 3	NOTE 4	NOTE 4
							NOTE 6	NOTE 6

LOCKWOOD GREENE ENGINEERING & CONSTRUCTION

REFERENCE NUMBER 1500-R-1108

FIGURE 3.5-37
PROCESS FLOW DIAGRAM
TREATED EFFLUENT POLISHING

REVISION DATE: DECEMBER 2003

ATTACHMENT E

MONITORING PLAN

NOTE: THE DETAILED SITE MONITORING PLAN WILL BE DEVELOPED AT A FUTURE DATE PRIOR TO PLANT OPERATION. THE FEATURES OF THE MONITORING PLAN ARE PRESENTED IN THIS ATTACHMENT.

ATTACHMENT E
Ground Water Discharge Permit Application

NEF Monitoring Plan

The NEF Monitoring Plan developed for the Ground Water Discharge Plan will incorporate the applicable requirements outlined in 20.6.2.3107 NMAC, in addition to other monitoring requirements at the NEF. Features of the overall monitoring plan are described below.

The NEF Detailed Site Map (see Attachment A) indicates the location of onsite sampling locations. Media monitored includes soil, vegetation, basin water, basin sediment and ground water.

Each year, the NEF will submit a summary report of the environmental sampling program to the NMED, including all associated data as required by 20.6.2 NMAC. The report will include the types, numbers, and frequencies of environmental measurements and the identities and activity concentrations of facility-related nuclides found in environmental samples, in addition to the minimum detectable concentrations (MDC) for the analyses and the error associated with each data point. Significant positive trends in activities will also be noted in the report, along with any adjustment to the program, unavailable samples, and deviation to the sampling program.

Effluent Monitoring Plan

The New Mexico Environment Department requires, pursuant to 20.6.2.3106 and 20.6.2.3107 NMAC that facilities conduct surveys necessary to demonstrate compliance with these regulations and to demonstrate that the facility effluents are not potentially impacting ground water sources.

Compliance is demonstrated through effluent and environmental sampling data. If an accidental release of uranium should occur, then routine operational effluent data and environmental data will be used to estimate the extent of the release. Appropriate action levels and actions to be taken are specified for liquid effluents. Data analysis methods and criteria used in evaluating and reporting environmental sample results are appropriate and will indicate when an action level is being approached in time to take corrective actions.

The NEF effluent monitoring program is subject to periodic audits conducted by the facility QA personnel. Written procedures will be in place to ensure the collection of representative samples, use of appropriate sampling methods and equipment, proper locations for sampling points, and proper handling, storage, transport, and analyses of effluent samples. In addition, the plant's written procedures also ensure that sampling and measuring equipment, including ancillary equipment, are properly maintained and calibrated at regular intervals. Moreover, the effluent monitoring program procedures include functional testing and routine checks to demonstrate that monitoring and measuring instruments are in working condition. Employees involved in implementation of this program are trained in the program procedures.

Liquid Effluent Monitoring

Liquid effluents containing low concentrations of radioactive material, consisting mainly of spent decontamination solutions, floor washings, liquid from the laundry, and evaporator flushes, is expected to be generated by the NEF. Table E.1, Estimated Uranium in Pre-Treated Liquid Waste from Various Sources, provides estimates of the annual volume and radioactive material content in liquid effluent by source prior to processing through the Liquid Effluent Collection and Treatment System. Uranium is the only radioactive material expected in these wastes. Potentially contaminated liquid effluent is routed to the Liquid Effluent Collection and Treatment System for treatment. Most of the radioactive material is removed from liquid effluent in the Liquid Effluent Collection and Treatment System through a combination of clean-up processes that includes precipitation, evaporation, and ion exchange that has an aggregate uranic removal efficiency of greater than 99%. Post-treatment liquid effluent is sampled and undergoes isotopic analysis prior to discharge. Concentrated radioactive solids generated by the liquid treatment processes at the facility are handled and disposed of as low-level radioactive waste.

After treatment, the effluent is released to the double-lined Treated Effluent Evaporative Basin, which includes leak detection monitoring.

The design basis uranium source term for routine liquid effluent discharge to the Treated Effluent Evaporative Basin has been conservatively estimated to be 570 grams per year. There is no offsite release of liquid effluents.

Representative sampling is required for all batch liquid effluent releases. Liquid samples are collected from each liquid batch and analyzed prior to any transfer. Isotopic analysis is performed prior to discharge. The Minimum Detectable Concentration(s) for analysis of liquid effluent are presented in Table E.2, Required Lower Level of Detection for Effluent Sample Analyses. The liquid effluent sampling program supports the determination of quantities and concentrations of radionuclides discharged to the Treated Effluent Evaporative Basin.

Periodic sampling of liquid effluent is required since these effluents are treated in batches. Representative sampling is assured through the use of tank agitators and recirculation lines. All collection tanks are sampled before the contents are sent through any treatment process. Treated water is collected in Monitor Tanks, which are sampled before discharge to the Treated Effluent Evaporative Basin.

General site storm water runoff is routed to the Site Storm water Detention Basin. The UBC Storage Pad Storm water Retention Basin collects storm water runoff from the UBC Storage Pad as well as cooling tower and boiler blowdown water. Both of these basins, along with the Treated Effluent Evaporative Basin, will be included in the site Radiological Environmental Monitoring Program.

Radiological Environmental Monitoring Program

The Radiological Environmental Monitoring Program (REMP) at the NEF is a major part of the effluent compliance program. It provides a supplementary check of containment and effluent controls, establishes a process for collecting data for assessing radiological impacts on the environs and estimating the potential impacts on the public, and supports the demonstration of compliance with applicable ground water and radiation protection standards and guidelines.

The primary objective of the REMP is to provide verification that the operations at the facility do not result in detrimental radiological impacts on the environment. Through its implementation, the REMP provides data to confirm the effectiveness of effluent controls and the effluent monitoring program. In order to meet program objectives, representative samples from various environmental media are collected and analyzed for the presence of plant-related radioactivity. The types and frequency of sampling and analyses are summarized in Table E.3, Radiological Environmental Monitoring Program. Environmental media identified for sampling consist of ambient air, ground water, soil/sediment, and vegetation. All environmental samples will be analyzed onsite. However, samples may also be shipped to a qualified independent laboratory for analyses. The Minimum Detectable Concentrations (MDCs) for gross alpha (assumed to be uranium) in various environmental media are shown in Table E.2, Required MDC for Environmental Sample Analyses. Monitoring and sampling activities, laboratory analyses, and reporting of facility-related radioactivity in the environment will be conducted in accordance with industry-accepted and regulatory-approved methodologies.

The REMP includes the collection of data during pre-operational years in order to establish baseline radiological information that will be used in determining and evaluating impacts from operations at the plant on the local environment. The REMP will be initiated at least 2 years prior to plant operations in order to develop a sufficient database. The early initiation of the REMP provides assurance that a sufficient environmental baseline has been established for the plant before the arrival of the first uranium hexafluoride shipment. Radionuclides in environmental media will be identified using technically appropriate, accurate, and sensitive analytical instruments. Data collected during the operational years will be compared to the baseline generated by the pre-operational data. Such comparisons provide a means of assessing the magnitude of potential radiological impacts on members of the public and in demonstrating compliance with applicable ground water and radiation protection standards.

The REMP may be enhanced during the operation of the facility as necessary to maintain the collection and reliability of environmental data based on changes to regulatory requirements or facility operations. The REMP includes administrative action levels (requiring further analysis) and reporting levels for radioactivity in environmental samples.

Vegetation and soil samples, both from on and offsite locations will be collected on a quarterly basis in each sector during the pre-operational REMP. This is to assure the development of a sound baseline. During the operational years, vegetation and soil sampling will be performed semiannually in eight sectors, including three with the highest predicted atmospheric deposition. Vegetation samples may include vegetables and grass, depending on availability. Soil samples will be collected in the same vicinity as the vegetation samples. Ground water samples from onsite monitoring well(s) will be collected semiannually for radiological analysis. Sediment samples will be collected semiannually from both of the storm water runoff retention/detention basins onsite to look for any buildup of uranic material being deposited. With respect to the Treated Effluent Evaporative Basin, measurements of the expected accumulation of uranic material into the sediment layer will be evaluated along with nearby air monitoring data to assess any observed resuspension of particles into the air.

Physiochemical Monitoring

The primary objective of physiochemical monitoring is to provide verification that the operations at the NEF do not result in detrimental chemical impacts on the environment. Effluent controls are in place to assure that chemical concentrations in liquid effluents are maintained as low as reasonably achievable (ALARA). In addition, physiochemical monitoring provides data to

confirm the effectiveness of effluent controls. In conducting physiochemical monitoring, sampling protocols and emission/effluent monitoring will be performed for routine operations with provisions for additional evaluation in response to potential accidental release.

The NEF will have an Environmental Monitoring Laboratory, which will be equipped with analytical instruments needed to ensure that the operation of the plant activities complies with federal, state and local environmental regulations and requirements. Compliance will be demonstrated by monitoring/sampling at various plant and process locations, analyzing the samples and reporting the results of these analyses to the appropriate agencies. The sampling/monitoring locations will be selected by the Health, Safety and Environmental (HS&E) organization staff in accordance with facility permits and good sampling practices. The Environmental Monitoring Laboratory is located in the Technical Services Building (TSB) and is used to perform analyses that include the following:

- Hazardous material presence in waste samples
- pH, oil and other contaminants in liquid effluents

Chemical constituents that may be discharged to the environment in facility effluents will be below concentrations that have been established by state and federal regulatory agencies as protective of the public health and the natural environment (20.6.2.3103 NMAC). Under routine operating conditions, no significant quantities of contaminants will be released from the facility. This will be confirmed through monitoring and collection and analysis of environmental data. The facility will not directly discharge any industrial effluents to surface waters or grounds offsite, and there is no plant tie-in to a Publicly Owned Treatment Works (POTW). Except for discharges from the Septic System, all liquid effluents are contained on the NEF site via collection tanks and retention basins. Refer to NEF Detailed Site Map (see Attachment A) for the locations of the basins and septic tanks.

Parameters for continuing environmental performance will be developed from the baseline data and additional preoperational sampling. Operational monitoring surveys will also be conducted using sampling sites and at frequencies established from baseline sampling data and as determined based on requirements. Operational monitoring surveys are determined based on requirements contained in NMED Ground Water Discharge Permit/Plan.

The frequency of some types of samples may be modified depending on baseline data or the parameters of concern. As construction and operation of the enrichment plant proceeds, changing conditions (e.g., regulations, site characteristics, and technology) and new knowledge may require that the monitoring program be reviewed and updated. The monitoring program will be enhanced as appropriate to maintain the collection and reliability of environmental data. The specific location of monitoring points will be determined in detailed design.

Each year, NEF will submit a summary of the environmental sampling program and associated data to the New Mexico Environment Department, as required. This summary will include the types, numbers, samples collection frequency, analytical results and a data analyses that includes a trend analysis with previous years' and pre-operational data.

Physiochemical monitoring will be conducted via sampling of storm water, soil, sediment, vegetation, and ground water as defined in Table E.4, Physiochemical Sampling, to confirm that trace, incidental chemical discharges are below regulatory limits. There are no surface waters on the site, therefore no Surface Water Monitoring Program will be implemented; however soil sampling will include outfall areas such as the outfall at the Site Storm water Detention Basin. In

the event of any accidental release from the facility, these sampling protocols will be initiated immediately and on a continuing basis to document the extent/impact of the release until conditions have been abated and mitigated. The locations of these sampling points are shown on NEF Detailed Site Map (see Attachment A).

Storm Water Monitoring Program

A storm water monitoring program will be initiated during construction of the facility. Data collected from the program will be used to evaluate the effectiveness of measures taken to prevent the contamination of storm water and to retain sediments within property boundaries. A temporary detention basin will be used as a sediment control basin during construction as part of the overall sedimentation erosion control plan.

Storm water monitoring will continue upon initiation of facility operation. During plant operation, samples will be collected from the Uranium Byproduct Cylinders (UBC) Storage Pad Storm water Retention Basin and the Site Storm water Detention Basin in order to demonstrate that runoff does not contain any contaminants. A list of parameters to be monitored, testing analytes and monitoring frequencies is presented in Table E.5, Storm water Monitoring Program. This monitoring program will be refined, as necessary.

Table E.1
Estimated Uranium In Pre-Treated Liquid Waste From Various Sources

Source	Typical Annual Quantities, m^3 (gals)	Typical Annual Uranic Content, kg (lbs)*
Laboratory/floor washings/miscellaneous condensates	23.14 (6112)	16 (35)
Degreaser water	3.71 (980)	18.5 (41)
Citric acid	2.72 (719)	22 (49)
Laundry effluent water	405.8 (107,213)	0.2 (0.44)
Hand wash & shower water	2100 (554,820)	None
TOTAL	2355 (669,844)	56 (125)

*Uranic quantity is before treatment. After treatment, approximately 1% of 0.57 kg (1.26 lb) of uranic material is expected to be discharged into the Treated Effluent Evaporative Basin.

Table E.2
Required Lower Level of Detection For Effluent Sample Analyses

Effluent Type	Nuclide	MDC[b] in Bq/ml (µCi/ml)
Liquid	Isotopic U[a]	1.4×10^{-4} (3.0×10^{-9})
Vegetation	Isotopic U	3.7×10^{-6} (1.0×10^{-10})
Soil/Sediment	Isotopic U	1.1×10^{-2} (3.0×10^{-7})
Ground Water[c]	Isotopic U	3.7×10^{-8} (1.0×10^{-12})

[a] Isotopic analysis for ^{234}U, ^{235}U, ^{236}U, and ^{238}U.
[b]. These MDCs are less than 2% of the limits in 10 CFR 20 Appendix B, Table 2 Effluent Concentrations
[c]. For analyses of ground water samples, the MDC will be at least 3.7×10^{-8} Bq/ml (1.0×10^{-12} µCi/ml), that represents <0.0004% of the concentration limits listed in Table 2 of Appendix B to 10 CFR 20.

Table E.3
Radiological Environmental Monitoring Program

Sample Type	Minimum Number of Sample Locations	Sampling and Collection Frequency	Type of Analysis
Liquid	Monitor Tank	Representative Grab Sample of (1 gallon)	Isotopic Analysis[a] Post-Treatment - Prior to Discharge.
Vegetation	8	1 to 2-kg (2.2 to 4.4-lb) samples collected semiannually	Isotopic analysis[a]
Ground Water	2	4-L (1.06-gal) samples collected semiannually	Isotopic analysis[a]
Basins	1 from each of 3 basins[b]	4-L (1.06-gal) water sample/1 to 2-kg (2.2 to 4.4-lb) sediment sample collected quarterly	Isotopic analysis[a]
Soil	8	1 to 2-kg (2.2 to 4.4-lb) samples collected semiannually	Isotopic analysis[a]

[a] Isotopic analysis for ^{234}U, ^{235}U, ^{236}U, and ^{238}U.
[b] Site Storm Water Detention Basin, UBC Storage Pad Storm Water Retention Basin and Treated Effluent Evaporative Basin.
Note: Physiochemical monitoring parameters are addressed separately

Table E.4
Physiochemical Sampling

Sample Type	Sample Location	Frequency	Sampling and Collections
Storm Water	Site Storm water Detention Basin and UBC Storage Pad Storm Water Retention Basin	Quarterly	Analytes as determined by baseline program
Vegetation	4 minimum[1]	Quarterly (growing seasons)	Fluoride uptake[2]
Soil/Sediment	4 minimum[1]	Quarterly	Metals[3], organics[4], pesticides[5], and herbicides
Ground Water	All selected ground water wells	Semiannually	Metals[3], organics[4], pesticides[5] and herbicides
Liquid Effluents	Treated Effluent Evaporative Basin		

[1] Location to be established by Health, Safety and Environmental (HS&E) organization staff
[2] Fluoride LLD: 0.5 mg/L
[3] Metals LLD: Most are 5 ppm; Hg is 0.5 ppb
[4] Organics LLD: 0.2-2.0 µg/L depending on analyte
[5] Pesticides LLD: 0.01-0.5 µg/L depending on pesticide analyte

Table E.5
Storm Water Monitoring Program for Detention and Retention Basins*

Monitored Parameter	Monitoring Frequency	Sample Type	LLD
Oil & Grease	Quarterly, if standing water exists	Grab	0.5 ppm
Total Suspended Solids	Quarterly, if standing water exists	Grab	0.5 ppm
5-Day Biological Oxygen Demand (BOD)	Quarterly, if standing water exists	Grab	2 ppm
Chemical Oxygen Demand (COD)	Quarterly, if standing water exists	Grab	1 ppm
Total Phosphorus	Quarterly, if standing water exists	Grab	0.1 ppm
Total Kjeldahl Nitrogen	Quarterly, if standing water exists	Grab	0.1 ppm
pH	Quarterly, if standing water exists	Grab	0.01 units
Nitrate plus Nitrite Nitrogen	Quarterly, if standing water exists	Grab	0.2 ppm
Metals	Quarterly, if standing water exists	Grab	Most are 5 ppm Hg is 0.5 ppb

* Site Storm Water Detention Basin, UBC Storage Pad Storm Water Detention Basin and any temporary basins used during construction.

ATTACHMENT F

SAMPLING PROTOCOL

ATTACHMENT F
Ground Water Discharge Permit Application

6.b.ii. *Describe in detail the sampling protocols that will be used for sample collection at all monitoring locations. Attach additional pages as necessary.*

Sampling Protocols

During implementation of the monitoring program, some samples may be collected in a different manner/method than specified herein. Examples of reasons for these deviations include severe weather events, changes in the length of the growing season, and changes in the number of plantings. Under these circumstances, documentation shall be prepared to describe how the samples were collected and the rationale for any deviations from normal monitoring program methods. If a sampling location has frequent unavailable samples or deviations from the schedule, then another location may be selected or other appropriate actions taken. In all examples presented below, the collector shall be required to don the appropriate personal protective equipment, safety equipment and have a companion collector in remote areas or when collecting at sites that may involve physical hazards (basins, culverts, septic tanks, etc.). In addition, all collection containers shall be labeled with the site identification information, GPS coordinates, date and time of the collection, the collectors name and phone number and the requested analyses. A laboratory sample submission form and a sample chain of custody form will be completed by the collector before transferring custody of the sample to someone else. Normal chain-of-custody procedures will be observed at all times and tamper-proof tape should be used on all container covers and lids.

<u>Grab Water Samples</u>

Depending upon the site, collect either one or two one-gallon samples from each sampling station (e.g., two one-quart samples are required for a gross beta AND gamma spectrometry/tritium analysis; one one-quart sample is required for a gross beta OR gamma spectrometry/tritium analysis).

In the field, fill a new properly labeled one (or two) one-gallon grab samples containing 80 mL of concentrated HCl and 100 mg of $NaHSO_3$ to each gallon of the representative water sample and
mix thoroughly.

Within five days of collection, send the one or two one-gallon grab samples, along with the appropriate submission forms, to the laboratory service for analysis.

<u>Bottom Sediment Samples</u>

Bottom sediments and soil samples are usually collected at specified intervals from various locations by means of a two-inch ID coring device. Six core sections having a minimum core depth of six inches each shall be collected per sampling site. Ensure that recently collected samples are kept upright at all times. The core sections are grouped and labeled by sampling site and frozen in an upright position (surface layer at top) until

they are sent to the laboratory. The analyst subsequently sections the frozen core into increments (e.g., 0-5 cm, 5-10 cm, etc.).

If the sampling sludge from the bottom of one of the site's retention or detention basins, the collector will collect the sample when the basin is dry or near to being dry. Coring devices, trowels and other sharp-edged sample collection tools will not be used when sampling basins having liners. In these cases, sludge sample collections will be made using blunt-edged metal or plastic trowels, where the collector takes great care not to puncture or damage the liner. Approximately 1-2 kg mass of sludge should be collected and placed in a double thickness (double-bagged) plastic bag having a zip-lock or similar closing so that leakage does not occur. Screw-top plastic jars may also be used instead of plastic jars, and even may be preferred if the sludge or sediment has a high water content. The laboratory should be asked to analyze the dried sludge (solids) and liquid portions separately.

Vegetation Samples

Whenever possible, grab samples of vegetation (grasses) should be collected from 4 m^2 plots at various locations during the growing season. If the concentration of vegetation precludes collection of the specified biomass within the designated quadrant, additional vegetation may be collected from the immediate vicinity. The collector should stake off a 2 meter by 2 meter plot in an open area. Cut the grass approximately one inch above ground level. The collector then will package the grass in a labeled plastic bag and weigh the sample prior to shipping. Place two 125 g samples of the freshly picked grasses into two 32 oz. wide-mouth screw cap plastic bottles (which have been properly labeled). To each aliquot, add 400 mL of 0.5M NaOH before capping the container. Shake the capped container for a few seconds. Samples should be refrigerated if held prior to shipment to the laboratory. Specimens should be shipped in an insulated container, along with the appropriate sample submission form, within two days of collection.

Soil Sampling

Following the selection of an undisturbed site, lay out a straight line transect about 4.5 m long. If the site is to be resampled at a later time, record distances to fixed landmarks to identify the relative location of the transect or adopt a systematic scheme or grid. If the vegetation cover is not to be included with the soil sample, or is to be kept as a separate sample, the vegetation is removed to the surface level. Using the 5 cm depth top soil cutter, press it into the ground without twisting or disturbing the grass cover or surface soil. Place the core in a plastic sampling bag. Repeat the process until the desired number of cores have been sampled. It is recommended that 6-10 cores for providing a representative sample. Compositing the samples provides a larger sample volume and possibly a more representative sample of the area. Take 6-10 top soil cores in a straight line about 30 cm apart, placing the cores in a plastic bag. Sometimes it may not be possible to remove a 5 cm depth plug cleanly because of a thick root mat. If the top soil and bottom soil are to be combined, a 10 cm or 15 cm deep cutter may be used to remove the top soil by pounding it part way into the ground with the rubber mallet, until it is possible to remove the core intact. Next, take the subsoil samples down to the desired depth with the auger. Continue to use the auger until the desired depth has been

sampled. If rocks or roots impede the auger, it may be possible to carefully remove them. They should be included with the sample. If, however, this destroys the core, the sample should not be used. It is a useful practice to place the soil from the core as it is removed into a plastic pail until the entire depth is removed. Then, if the core is not suitable, it may be poured back into the hole. Only after the entire sample is successfully removed is the soil added to the sampling bag. Repeat the procedure for the remaining cores. After collection, label the plastic bag containing the sample, fold, and seal with a heavy duty stapler. If a portable scale is available, the wet weight can be taken in the field. Then place the sample in a double-thickness plastic bag and tie firmly. The label should include the date, location, and depth.

Ground Water Samples

Water samples should not be taken immediately following well development. Sufficient time should be allowed for the ground water flow regime in the vicinity of the monitoring well to stabilize and to let chemical equilibrium with the well construction materials be approached. This lag time will depend on site conditions and methods of installation but often exceeds one week

Well purging is nearly always necessary to obtain samples of water flowing through the geologic formations in the screened interval. Rather than using a general but arbitrary guideline of purging three casing volumes prior to sampling, it is recommended that an in-line water quality measurement device (e.g. flow-through cell) be used to establish the stabilization time for several parameters (e.g. pH, specific conductance, redox, dissolved oxygen, turbidity) on a well-specific basis. Data on pumping rate, drawdown, and volume required for parameter stabilization can be used as a guide for conducting subsequent sampling activities. As an alternative, the well could be purged using low flow pumping techniques as approved by NMED.

The following are recommendations to be considered before, during and after sampling:

- Use low-flow rates (<0.5 L/min) during both purging and sampling to maintain minimal draw down in the well. The amount of purging will be limited due to the slow recharge rate around the well casing and the low quantity of ground water at the site.
- Maximize tubing wall thickness and minimize tubing length.
- Place the sampling device intake at the desired sampling point
- Minimize disturbances of the stagnant water column above the screened interval during water level measurements and sampling device insertion
- Make proper adjustments to stabilize the flow rate as soon as possible
- Monitor water quality indicators during purging and do nor purge any longer than is necessary to collect a representative sample.
- Collect unfiltered samples to estimate contaminant loading and transport potential in the subsurface system.

It is recommended that a device be used which will least disturb the water surface in the casing. Well depth should be obtained from the well logs. Measuring to the bottom of the well casing will only cause resuspension of settled solids from the formation and require longer purging times for turbidity equilibration. Measure well depth after sampling is completed. The water level measurement should be taken from a permanent reference point which is surveyed in relative to ground elevation.

Consideration should be given as to what the application of field-filtration is trying to accomplish. For assessment of truly dissolved (as opposed to operationally "dissolved" [ie. samples filtered with 0.45 µm filters]) concentrations of major ions and trace metals, 0.1 µm filters are recommended although 0.45 µm filters are normally used for most regulatory programs.

Upon parameter stabilization, sampling can be initiated. If an in-line device is used to monitor water quality parameters, it should be disconnected or bypassed during sample collection. Sampling flow rate may remain at established purge rate or may be adjusted slightly to minimize aeration, bubble formation, turbulent filling of sample bottles, or loss of volatiles due to extended residence time in tubing. Typically, flow rates less than 0.5 L/min are appropriate. The same device should be used for sampling as was used for purging. Sampling should occur in a progression from least to most contaminated well if this is known. Filtering should be done last and in-line filters should be used as discussed above. During both well purging and sampling, proper protective clothing and equipment must be used based upon the type and level of contaminants present.

The appropriate sample container will be prepared in advance of actual sample collection for the analytes of interest and include sample preservative where necessary. Water samples should be collected directly into this container from the pump tubing. Immediately after a sample bottle has been filled, it must be preserved as specified in the site Quality Assurance Project Plan (QAPP). It may be advisable to add preservatives to sample bottles in a controlled setting prior to entering the field in order to reduce the chances of improperly preserving sample bottles or introducing field contaminants into a sample bottle while adding the preservatives.

Sampling and Laboratory Quality Assurance

The NEF will ensure that the onsite laboratory and any contractor laboratory used to analyze NEF samples participates in third-party laboratory intercomparison programs appropriate to the media and analytes being measured. Examples of these third-party programs are the Mixed Analyte Performance Evaluation Program (MAPEP) and the DOE Quality Assurance Program (DOEQAP) that are administered by the Department of Energy. The NEF will require all radiological and non-radiological laboratory vendors to be certified by the National Environmental Laboratory Accreditation Conference (NELAC) or an equivalent state laboratory accreditation agency for the analytes being tested.

The Quality Control (QC) procedures used by the laboratories performing analyses for the plant's monitoring programs will be adequate to validate the analytical results and will conform with the guidance in NRC Regulatory Guide 4.15. These QC procedures include the use of established standards such as those provided by the National Institute of Standards and Technology (NIST), as well as standard analytical procedures such as those established by the National Environmental Laboratory Accreditation Conference (NELAC). Monitoring procedures will employ well-known acceptable analytical methods and instrumentation. The instrument maintenance and calibration program will be appropriate to the given instrumentation, in accordance with manufacturers' recommendations.

ATTACHMENT G

NEF AREA MAP

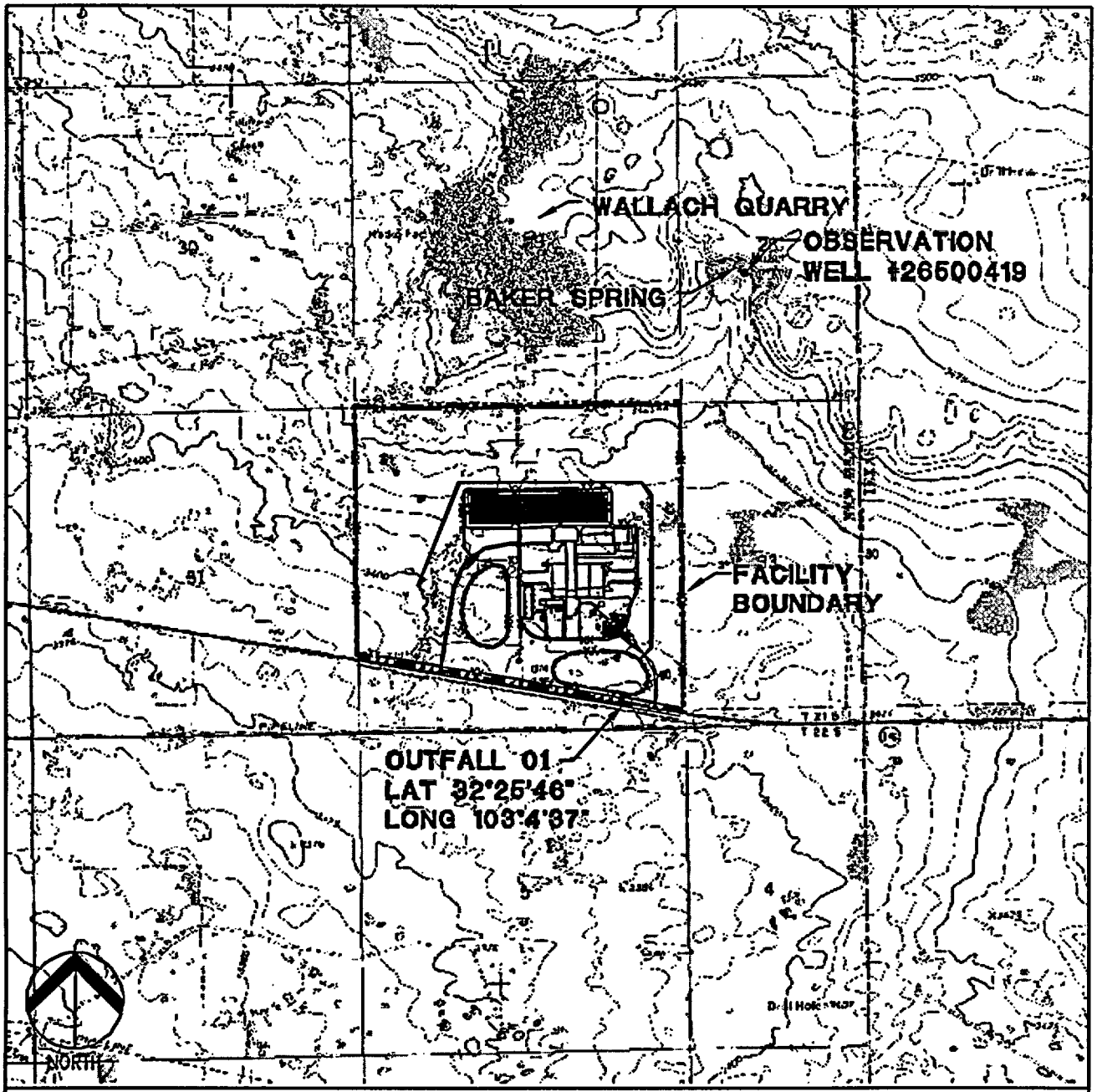

1000 0 1000 2000 3000 FEET

300 0 300 600 900 METERS

MAP SOURCE:
USGS 7.5 MINUTE
EUNICE NE QUADRANGLE
TEX.–N. MEX. 1:24000

CONTOUR INTERVAL:
5 FEET

LOCKWOOD GREENE
ENGINEERING & CONSTRUCTION

REFERENCE NUMBER
Figure 3.4–1.dwg

NEF AREA MAP
GROUNDWATER DISCHARGE PERMIT

ATTACHMENT H

NEF ROAD MAP

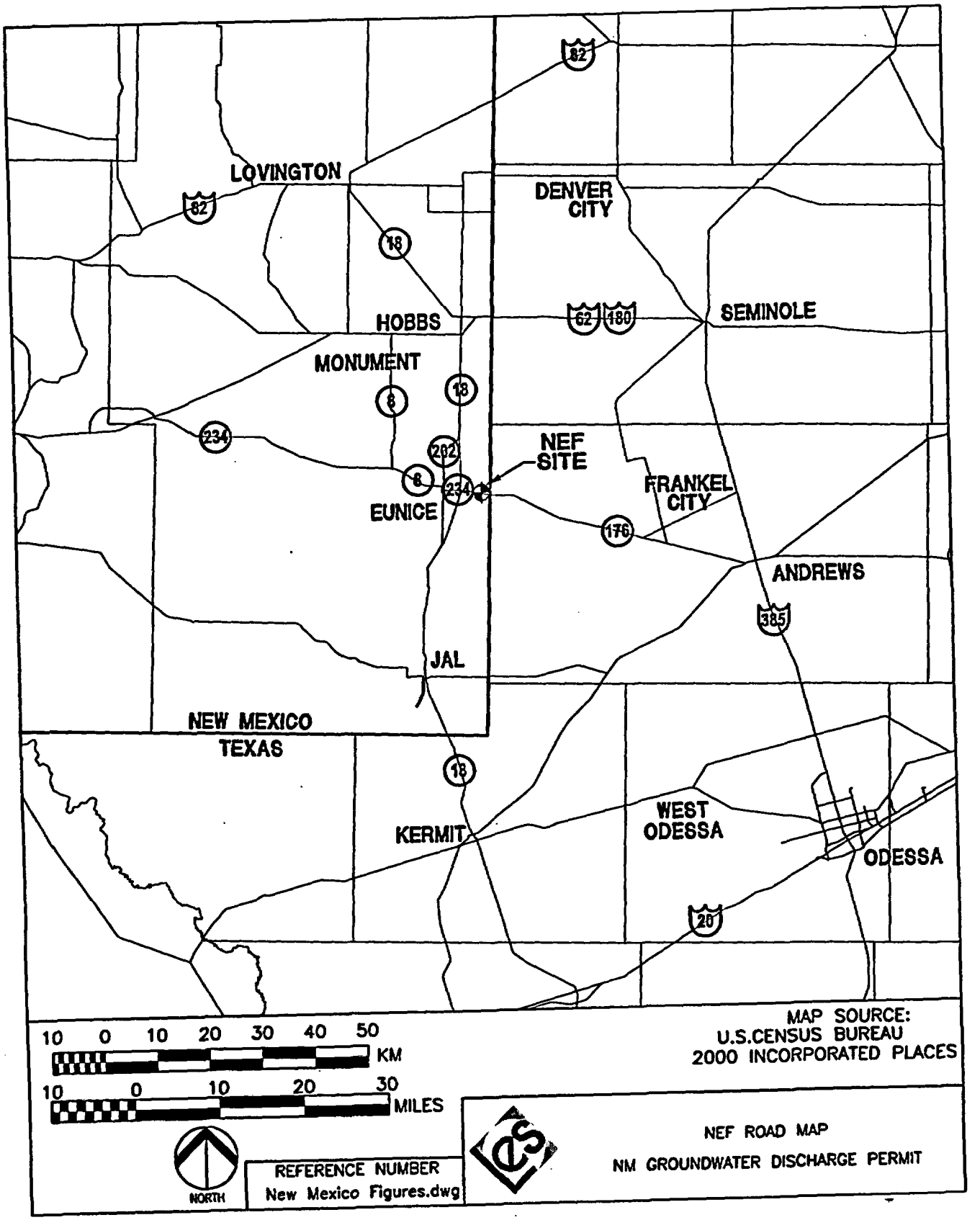
LOVINGTON
DENVER CITY
HOBBS
SEMINOLE
MONUMENT
NEF SITE
FRANKEL CITY
EUNICE
ANDREWS
JAL
NEW MEXICO
TEXAS
KERMIT
WEST ODESSA
ODESSA
82
18
62
180
8
234
202
176
385
20
10 0 10 20 30 40 50
KM
10 0 10 20 30
MILES
NORTH
MAP SOURCE:
U.S.CENSUS BUREAU
2000 INCORPORATED PLACES
REFERENCE NUMBER
New Mexico Figures.dwg
NEF ROAD MAP
NM GROUNDWATER DISCHARGE PERMIT

ATTACHMENT I

FEMA FLOOD INFORMATION

FEMA Map Service Center (MSC) Product Map Search
(http://www.msc.fema.gov/index.shtml)

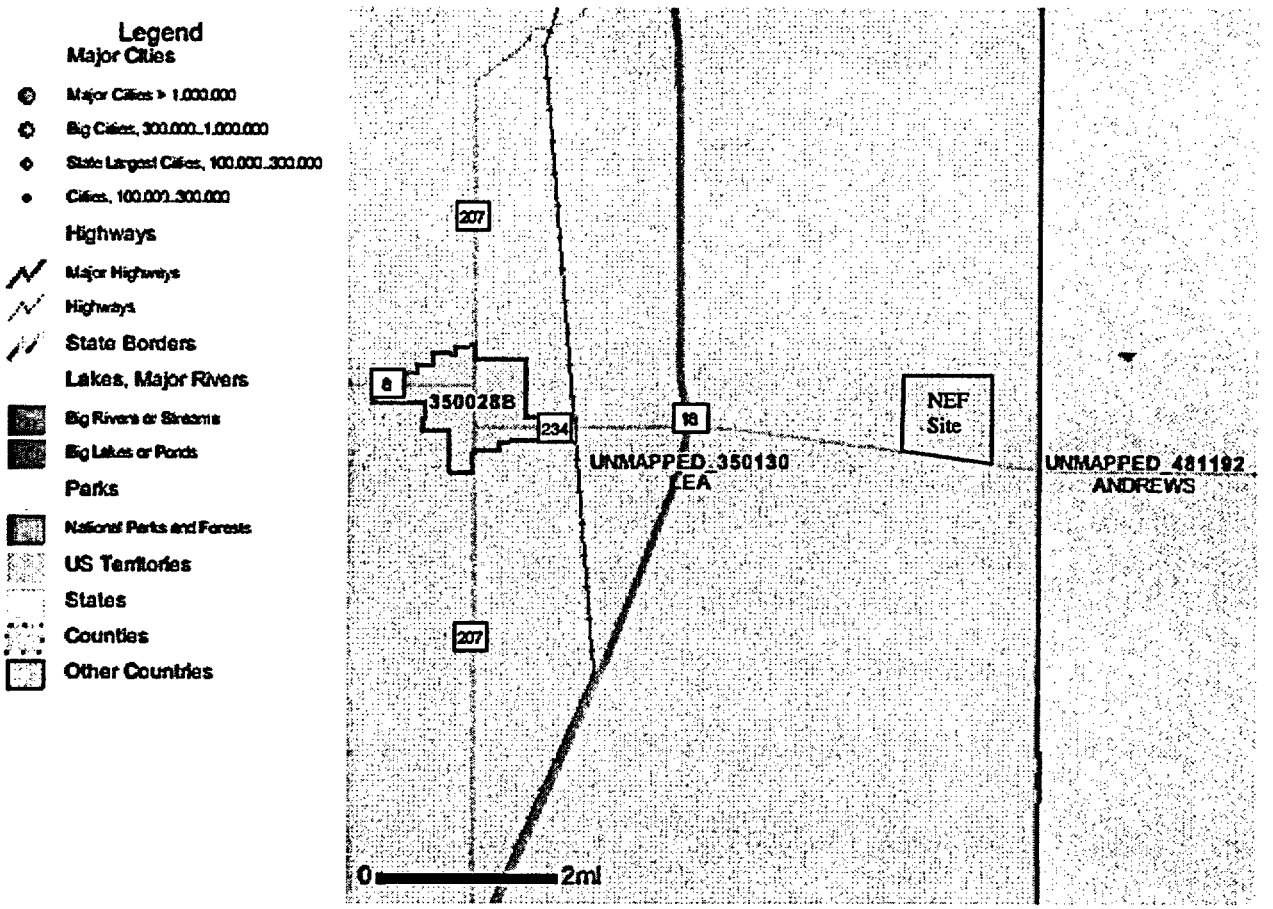

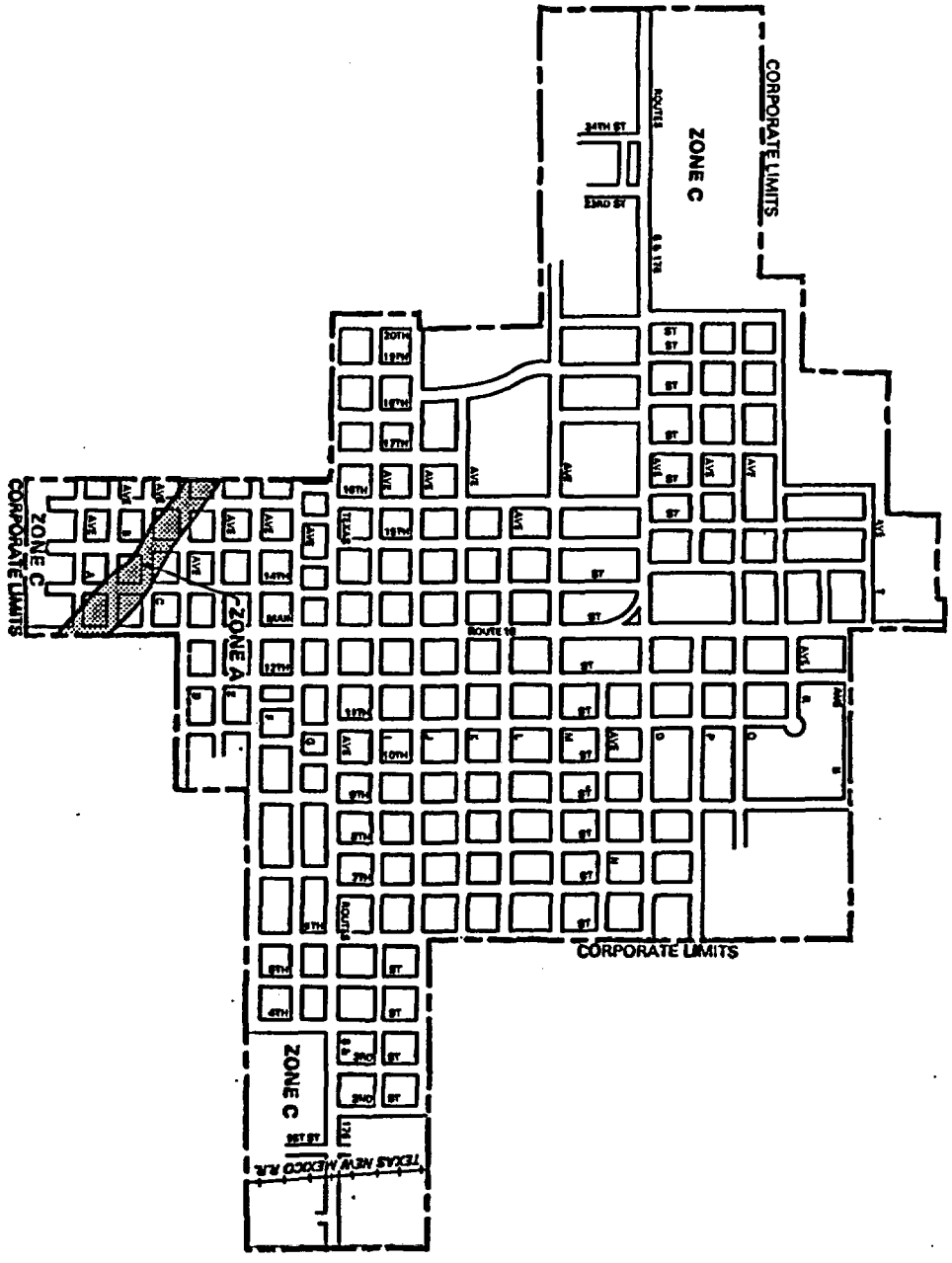

DEPARTMENT OF HOUSING AND URBAN DEVELOPMENT
Federal Insurance Administration

CITY OF EUNICE, NM
(LEA CO.)

APPROXIMATE SCALE
1000 0 1000 2000 3000 FEET

FLOOD HAZARD BOUNDARY MAP H - 01
FLOOD INSURANCE RATE MAP I - 01

EFFECTIVE DATE
8/22/78

H81-01

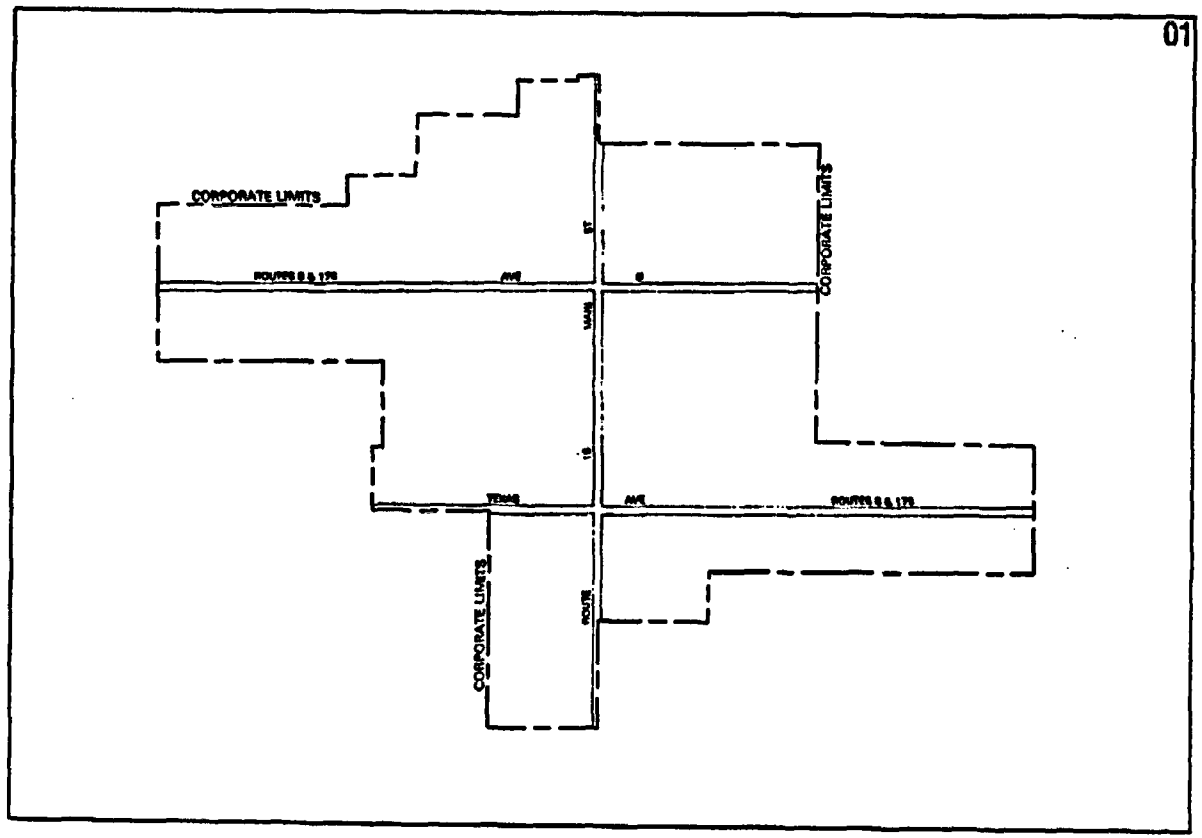

KEY TO SYMBOLS

SPECIAL FLOOD HAZARD AREA

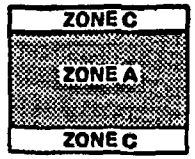

Base Flood Elevation Line —————513—————

Base Flood Elevation (513' MSL)

Elevation Reference Mark RM7 ×

River Mile • M1.5

EXPLANATION OF ZONE DESIGNATIONS

A flood insurance map displays the zone designations for a community according to areas of designated flood hazards. The zone designations used by FIA are:

Zone Symbol	Category
A	Area of special flood hazards (SFHA) and without base flood elevations determined.
A1 through A30	Area of special flood hazards (SFHA) with base flood elevations. Zones are assigned according to flood hazard factors, and date of SFHA identification.
AO	Area of special flood hazards that have shallow flood depths (1ft) that are flood and/or unpredictable flow paths. Base flood elevations are not determined.
V	Area of special flood hazards, with velocity, that are inundated by tidal floods. Zones are assigned according to flood hazard factors and date of SFHA identification.
B	Area of moderate flood hazards.
C	Area of minimal flood hazards.
D	Area of undetermined, but possible, flood hazards.

TO DETERMINE IF FLOOD INSURANCE IS AVAILABLE IN THIS COMMUNITY, CONTACT YOUR INSURANCE AGENT, OR CALL THE NATIONAL FLOOD INSURANCE PROGRAM, AT (800) 638-6620, OR (800) 424-8872.

INITIAL IDENTIFICATION DATE:
AUGUST 30, 1974

MAP REVISED: DECEMBER 15, 1978
CURVILINEAR FLOOD BOUNDARY
& ADD S.F.H.A. & REVISE S.F.H.A.

MAP REVISED: AUGUST 22, 1979
CONVERSION FROM F.H.B.M. TO F.I.R.M.

DEPARTMENT OF HOUSING AND URBAN DEVELOPMENT
Federal Insurance Administration

FLOOD HAZARD BOUNDARY MAP H - 01
FLOOD INSURANCE RATE MAP I - 01

MAP INDEX

CITY OF EUNICE, NM
(LEA CO.)

COMMUNITY NO. 350028B

ATTACHMENT J

NEF SITE SOILS MAP

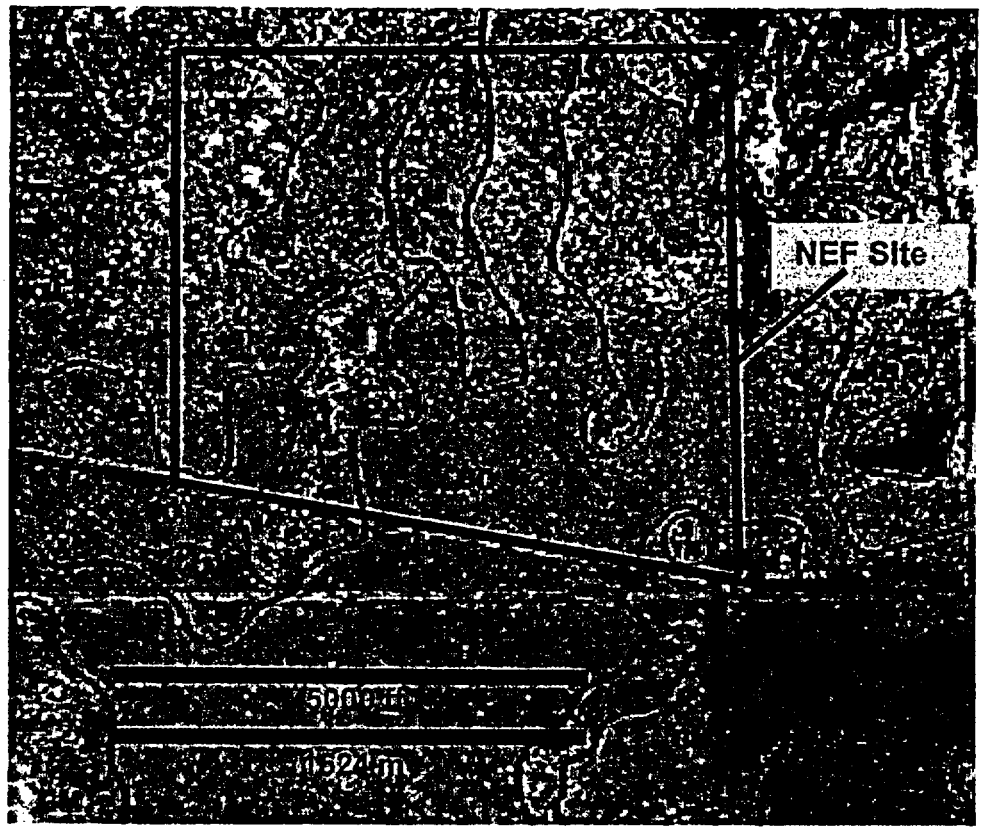

USDA SOIL DESIGNATION	SOIL NAME/DESCRIPTION	UNIFIED SOIL CLASSIFICATION DESIGNATION(S)
Aa	ACTIVE (SAND) DUNE LAND.	SP
BO	BROWNFIELD-SPRINGER ASSOCIATION: MOSTLY FINE SAND WITH LOAM FINE SAND; LEVEL TO UNDULATING TOPOGRAPHY; MODERATELY RAPID PERMEABLILITY AND SLOW RUNOFF.	SM
BS	BROWNFIELD-SPRINGER ASSOCIATION: MOSTLY FINE SAND WITH LOAM FINE SAND; DUNES AND HUMMOCKS FOR CONCAVE AND CONVEX ROLLING TERRAIN; DRAINAGE SIMILAR TO BO.	SM
KM	KERMIT SOILS AND DUNE LAND: EXCESSIVELY-DRAINED NON-CALCAREOUS SOILS; HUMMOCKY AND UNDULATING TOPOGRAPHY DUE TO EOLIAN PROCESSES.	SP-SM OR SM
MU	MIXED ALLUVIAL LANDS: UNCONSOLIDATED, STRATIFIED ALLUVIUM WITH VARIED TEXTURES OCCURRING INTERMITTENTLY IN DRAINAGE-WAYS A FEW FEET IN THICKNESS; MODERATE TO RAPID PERMEABILITY WITH SLOW RUNOFF.	VARIABLE
PG	PORTALES AND GOMEZ FINE SANDY LOAMS: LIGHT CLAY LOAM, WELL-DRAINED.	VARIABLE

SOURCE: (USDA, 1974)

NORTH

REFERENCE NUMBER
MSWord Figures.dwg

NEF SITE SOIL MAP
NM GROUNDWATER DISCHARGE PERMIT

ATTACHMENT K

NEI LAND EASEMENT AND LAND USE RESTRICTION

ATTACHMENT K
NEI Land Easement and Land Use Restriction

The following two documents contain the Land Easement and the Land Use Restriction.

1) The Grant of Easement and Right of Way from the State of New Mexico to LES. This is the main document that gives LES the right to use the land for the NEF in accordance with the operating license from NRC. Under the Easement, the state still retains the mineral rights to the property.

2) The Agreement Regarding Land Use Restriction or Conditions from the State of New Mexico. This companion document prohibits the state from exercising its right to explore for, mine, develop, and produce minerals without LES consent.

R/W No. RW 2858

STATE OF NEW MEXICO
COMMISSIONER OF PUBLIC LANDS
GRANT OF EASEMENT AND RIGHT OF WAY

Subject to the terms, conditions and limitations set out herein below, the New Mexico Commissioner of Public Lands (together with successors and assigns, "Grantor"), in his capacity as trustee of the land trust established by the Enabling Act (Act of June 20, 1910, 36 Statutes at Large 557, Chapter 310) and that trust's assets (the land trust and its assets, collectively, the "Trust"), hereby Grants to Louisiana Energy Services, L.P., a Delaware limited partnership (together with its successors and assigns, "Grantee"), whose address is 1133 Connecticut Ave, NW, Suite 200, Washington, DC 20036, an easement and right of way ("Easement"), in and to the Land (defined below).

1. **Land:** This Easement covers the State of New Mexico ("State") trust land ("Land") depicted in the attached Exhibit A.

2. **Term:** This Easement is for a term ("Term") of thirty-five (35) years, commencing on the day on which the Grantor executes this Easement ("Effective Date") and ending at 11:59 p.m. on the thirty-fifth (35th) annual anniversary of the Effective Date, or upon earlier termination or relinquishment of this Easement.

3. **Consideration:** As consideration ("Consideration") for this Easement, Grantee shall pay to Grantor:

(1) One hundred twenty thousand and no/100 Dollars ($120,000) ("Initial Payment"), payable on the Effective Date. The Initial Payment is nonrefundable.

(2) Thirty thousand and no/100 Dollars ($30,000) on the fifth (5th) anniversary of the Effective Date, and on each anniversary of the Effective Date thereafter up to and including the thirty-fourth (34th) anniversary of the Effective Date unless this Easement is earlier terminated or relinquished.

Grantor and Grantee acknowledge and agree that the Consideration is good and sufficient consideration for the grant of this Easement and for the other agreements contained in this instrument.

RECEIVED
2007 JUN 7 PM 3:18
STATE LAND OFFICE

4. **Uses of the Land; Improvements and Equipment:**

A. This Easement authorizes Grantee to use and improve the Land in any manner that may be necessary or convenient to support and facilitate a gas centrifuge uranium enrichment facility ("Facility") in accordance with an operating license from the United States Nuclear Regulatory Commission ("NRC") or any other successor agency with jurisdiction, as the same may be renewed, revised, amended, supplemented, assigned, modified and/or renumbered from time to time in accordance with law and applicable regulations ("NRC License") and all applicable federal licensing or regulatory requirements ("Federal Requirements") and, subject to Paragraph 26 of this Easement, applicable state licensing or regulatory requirements ("State Requirements").

B. This Easement shall be liberally construed to assure that Grantee and its agents have sufficient legal rights to use and improve the Land as necessary to (i) support and facilitate the Facility; (ii) decommission the Facility in accordance with Federal Requirements and , subject to Paragraph 26 of this Easement, State Requirements, including but not limited to NRC requirements as specified in Title 10 of the Code of Federal Regulations (i.e., 10 CFR), Parts 70, "Special nuclear material," and 40, "Source material," sections 70.38 and 40.42, "Expiration and termination of licenses and decommissioning of sites and separate buildings or outdoor areas "(i.e., 10 CFR 70.38 and 10 CFR 40.42); and (iii) fully reclaim the Land in accordance with Federal Requirements, State Requirements and this Easement, subject to Paragraph 26 of this Easement. Subject to Paragraph 4.C below, Grantee's rights under this Easement shall include, *but are not limited to*, the right to use and improve the Land for the following purposes: (a) constructing and operating the Facility; (b) providing power, water, waste disposal and other utility services to the Facility; (c) providing access to the Facility; (d) limiting access to the Facility and the Land in proximity thereto as required by the NRC License or other Federal Requirements; (e) constructing, operating and maintaining primary and support buildings and facilities; (f) constructing facilities for uranium byproduct storage in accordance with Federal Requirements, including but not limited to the regulatory standards of NRC and, subject to Paragraph 26 of this Easement, State Requirements; (g) storing uranium byproduct in accordance with Federal Requirements, including but not limited to the regulatory standards of NRC and, subject to Paragraph 26 of this Easement, State Requirements; (h) constructing and

RECEIVED
STATE OFFICE

maintaining access and maintenance roads; (i) decommissioning the Facility as required by Federal Requirements, including but not limited to the regulatory standards of NRC and, subject to Paragraph 26 of this Easement, State Requirements; (j) reclaiming the Land and removing improvements and equipment as provided in Paragraph 5.B-E of this Easement; and (k) housing furnishings, fixtures, equipment and vehicles related to the operations at the Facility; provided, however, that all uses and improvements under this Easement shall be in accordance with all Federal Requirements, including but not limited to the regulatory standards of NRC and, subject to Paragraph 26 of this Easement, State Requirements, and only as necessary or convenient to support and facilitate the Facility.

C. Grantee may use and operate such equipment on the Land, and may construct, operate, maintain and replace improvements on the Land, as may be reasonably necessary to carry out the purposes of this Easement, as set forth in Paragraph 4.A above. As of the Effective Date, Grantee anticipates that it will construct, operate, maintain and replace, as necessary, the following improvements and equipment on the Land:

(1) The buildings, administrative facilities, access roads, storage facilities, electrical lines and poles, pipelines, fencing, security apparatus, ponding areas and other improvements depicted on Exhibit B to this Easement;

(2) A septic tank and leaching field; and

(3) Such other improvements, personal property and fixtures as may be necessary or desirable to carry out the purpose of this Easement, as set forth in Paragraph 4.A above.

The foregoing description of improvements and equipment is not intended to be an exhaustive list.

D. Grantor understands and agrees that access to the Facility and to the Land in proximity thereto will be limited in accordance with Federal Requirements, including but not limited to NRC requirements specified in 10 CFR 73, "Physical protection of plants and materials," as directed by 10 CFR 70.22, "Contents of licenses," paragraph (h)(1), and, subject to Paragraph 26 of this Easement, State Requirements.

E. Except as limited by Paragraph 17, (i) documents related to substantial improvements on the Land shall be kept at the operations office for the Facility; (ii) Grantor shall have the right to inspect such records and improvements provided that Grantor shall request

such inspection by giving Grantee reasonable notice thereof and provided that Grantee is able to permit access to the Facility at the time requested by Grantor; and (iii) Grantee shall provide Grantor with copies of documents that it provides to NRC, the New Mexico Environmental Department and any other federal or state agency with jurisdiction, showing the location and/or type of the improvements and equipment located on the Land. If Grantee is unable to provide access to the Facility at the specific time requested by Grantor, such access will be available to Grantor at such other time as is mutually agreeable to Grantor and Grantee.

5. **Reclamation and Removal of Improvement and Equipment.**

A. Prior to termination of this Easement, Grantee shall decommission the Facility as required by, and in accordance with, Federal Requirements, including but not limited to NRC regulatory requirements in 10 CFR 70.38 and 10 CFR 40.42, and subject to Paragraph 26 of this Easement, State Requirements. Grantee also shall provide assurances that adequate funding will be available to decommission the Facility in accordance with Federal Requirements, including but not limited to NRC requirements in 10 CFR 70.25 and 10 CFR 40.36, "Financial assurance and recordkeeping for decommissioning" and, subject to Paragraph 26 of this Easement, State Requirements. Documentation thereof shall be delivered to Grantor as and when it is delivered to NRC.

B. Grantee shall reclaim the land in accordance with Federal Requirements and State Requirements. Grantee shall submit a proposed reclamation plan ("Reclamation Plan") to Grantor for Grantor's approval, which approval Grantor shall not unreasonably withhold. The Reclamation Plan shall be submitted to Grantor concurrently with Grantee's submission to NRC of its plan for decommissioning the Facility ("Decommissioning Plan") as required by Federal Requirements, including but not limited to 10 CFR 70.38 and 10 CFR 40.42, and, subject to Paragraph 26 of this Easement, State Requirements. Grantor agrees that the Reclamation Plan may provide that reclamation required by Section 19.2.10.27, N.M.A.C. and removal of improvements and equipment shall commence after completion of the activities required by the Decommissioning Plan. Grantee shall reclaim the Land in accordance with the Reclamation Plan approved by Grantor.

C. Prior to relinquishment or termination of this Easement, Grantee shall remove all improvements and equipment on the Land except as otherwise provided herein, or

RECEIVED

except as required by the Reclamation Plan approved by Grantor, or in a written agreement between Grantor and Grantee.

D. If Grantee fails to remove improvements and equipment on Land as required in Paragraph 5.C, Grantor may, at Grantor's discretion, declare that all or any such remaining improvements and equipment are forfeited to Grantor. Any such declaration shall be in writing and shall be sent to Grantee in the manner contemplated for giving notice under this Easement. In the event of forfeiture, Grantee shall execute such bills of sale, assignments, or such other instruments as Grantor may request to acknowledge the transfer of title to Grantor.

E. If Grantee fails to remove any non-forfeited improvements and equipment as required herein, Grantee shall be deemed a holdover tenant and shall pay Grantor monthly rent, in advance, equal to three (3) times the then current rental value of the Land on which the improvements and/or equipment is located. Such rental value shall be calculated assuming the Land's highest and best use, as determined solely by the Grantor, and shall be based on no fewer than 10 acres. This provision shall not be deemed liquidated damages, shall not constitute a penalty and shall not entitle Grantee to continued use or possession of the Land.

F. Paragraphs 5.A through 5.E shall survive termination of this Easement.

6. **Rights Reserved to Grantor:**

A. This Easement conveys only the rights and interest in the Land expressly described. This Easement conveys no right, title or interest in the Land by implication.

B. Subject to the limitations set forth in Paragraph 6.C, Grantor hereby expressly reserves from this Easement:

(1) all subsurface and mineral rights, including the right to explore for, mine, develop and produce minerals such as sand and gravel, coal, caliche and humate and to issue oil; gas; geothermal resources and any other minerals related to the Land, provided that such rights, issues and leases shall be subject to this Easement;

(2) the right to sell or exchange the Land, provided that (i) Grantor shall give Grantee such notice as required by law, rules and regulations of its intent to sell or exchange and (ii) such sale or exchange (if not to Grantee) shall be subject to this Easement; and

(3) the right to use and possession of the Land free of this Easement after relinquishment or termination of this Easement, subject only to Grantee's right and duty to remove improvements and equipment and reclaim the Land.

C. Grantor shall execute and record in the records of the State Land Office a Land Use Restriction or Condition ("LURC") that provides that, absent Grantee's prior written consent, (i) Grantor shall neither exercise Grantor's rights under Paragraph 6.B(1) nor exercise Grantor's right to lease or otherwise dispose of or encumber the Land or any interest incident thereto, for any purpose, or grant additional easements, rights-of-way and grants across, under or over the Land, including the development of any sand and gravel, coal, caliche, humate, oil and gas or other minerals and (ii) there shall be no surface disturbance of the Land and no right to explore for, mine, develop and/or produce oil, geothermal resources, gas and/or minerals during the Term of this Easement. As good and adequate consideration for the LURC, Grantee shall pay to Grantor Five Thousand and no/100 Dollars ($5,000.00) per year, beginning on the fifth (5th) anniversary of the Effective Date and on each anniversary of the Effective Date thereafter up to and including the thirty-fourth (34th) anniversary of the Effective Date, or so long thereafter as Grantee occupies and uses the Land, unless this Easement is earlier terminated or relinquished; provided that if the Easement is terminated by a sale or exchange of the Land to Grantee or to Lea County, New Mexico, (a) both the restrictions and conditions in the LURC and Grantee's obligation to pay the consideration therefor in the amount, and for the time, set forth in this Paragraph shall survive and (b) the instrument conveying the Land shall expressly recite the restrictions set forth in the LURC. Grantee may record the LURC in the real property records of Lea County, New Mexico.

D. If Grantor offers the land for sale or exchange, Grantee agrees to participate in the sale or exchange process and submit and offer to purchase or exchange the land directly or through an intermediary with a bid of at least the fair market value of the unimproved land and the fair market value of third party improvements and comply with Grantor's rules and regulations on land sales or exchanges.

7. **Compliance with Law:** Grantee shall comply with all laws, whether statutory or court-made, regulations, rules, ordinances, and requirements, including, but not limited to, those addressed to environmental protection and all State Land Office Rules applicable to the Land or

to Grantee's use of the Land and improvements thereon. Grantee's compliance obligations include, but are not limited to:

A. Grantee agrees not to discriminate against any person on the basis of race, color, religion, national origin, sex, sexual preference, age or handicap.

B. Grantee shall not permit any nuisance to be maintained on the Land, provided that no use of the Land permitted by this Easement shall be deemed to constitute, or cause, a nuisance.

C. Grantee shall comply with applicable environmental laws in Chapter 74, NMSA 1978, and regulations promulgated pursuant thereto.

D. Grantee shall diligently maintain and protect the Land and improvements thereon from waste and trespass, provided that no use of the Land permitted by this Easement shall be deemed to constitute, or cause, waste of the Land.

8. **No Warranty.** Grantor makes no warranties as to Grantor's title, fitness of the Land for a particular purpose or as to any other matter. Grantee shall use, improve and accept the Land "as is." The rights granted hereby are subject to existing rights. Grantee agrees that it is solely responsible for determining whether any third party has or claims any prior and superior right, title or interest in or to the Land that may conflict with this Easement. Grantee shall at Grantee's sole expense resolve any such conflicting claims and, in the event of litigation, Grantor shall not be an indispensable or necessary party.

9. **Existing Rights.** Except as may be required by the NRC License or with applicable NRC requirements, Grantee shall not interfere with any leases, rights-of-way, Grants or other rights or interests in or to the Land that were granted by the State of New Mexico in existence on the Effective Date ("Existing Rights"). Grantee specifically agrees to use its best efforts to (i) avoid destruction or injury to any improvements or livestock on the Land pursuant to Existing Rights; (ii) close all gates immediately upon passing through same; and (iii) pay promptly the reasonable and just damages for injury or destruction arising from Grantee's use of the Land. Notwithstanding the foregoing, Grantee shall have the right to negotiate with the Grantor and the grantee of that certain Grant of Right of Way No. RW-22760 to relocate the carbon dioxide pipeline permitted thereby.

10. **Pipelines.** Unless otherwise expressly agreed by Grantor in writing, Grantee shall bury at least twenty inches (20") below the surface all pipelines that are installed by

Grantee on the Land except temporary pipelines, or pipelines whose sole purpose is to support a construction project.

11. **Assignment.** Except as otherwise provided in this Paragraph, Grantee shall not assign this Easement, either in whole or in part, without the prior written consent of Grantor. Grantor's consent may be conditioned upon the agreement by Grantee's assignee to additional conditions and covenants and may require payment of additional consideration to Grantor; provided that, for any authorized assignment occurring on or before January 1, 2009, no additional covenants and conditions and no additional payment shall be required. Grantor hereby consents to (i) Grantee's assignment of this Easement, or a leasehold or other interest in this easement, to Lea County, New Mexico ("County") and to the County's grant to Grantee, or its designee, of a lease, license, permit or other authorization to use the Easement, or such interest in the Easement, for the purposes authorized in this Easement and pursuant to both the County Industrial Bond Revenue Act, Chapter 4, Article 59 N.M.S.A 1978, as amended, and other applicable law, if any; provided, that such assignment shall not diminish, alter or affect Grantee's duties, liability or responsibilities under this Easement; and (ii) the grant of mortgage or other encumbrance on or against this Easement to secure obligations incurred in financing for the Facility. Additionally, notwithstanding any other provision in this Easement, Grantee may, without Grantor's consent, grant licenses, permits or other authorizations to third parties to carry out the purposes of this Easement; provided, however, that such licenses, permits or other authorizations by Grantee shall not constitute an assignment of this Easement and shall not diminish, alter or affect Grantee's duties, liability or responsibilities under this Easement.

12. **Abandonment.** Grantor may deem that Grantee has abandoned its rights and interest under this Easement if after January 1, 2009, Grantee fails for a continuous period in excess of twelve (12) consecutive months to use the Land, or some portion thereof, for at least one of the purposes authorized by this Easement. In such event, at Grantor's discretion, this Easement shall be subject to termination pursuant to Paragraph 15 below *unless* Grantee's non-use is the result of a court or administrative order or is otherwise involuntary, as set forth in an affidavit provided to Grantor by Grantee. Furthermore, no abandonment shall be deemed to have occurred as to any disturbed portion of Land that has not been fully reclaimed in accordance with this Easement.

13. **Relinquishment.**

A. Grantee may request relinquishment of this Easement, in whole or in part, by requesting such relinquishment in writing. Grantee shall not, by relinquishment, avoid or be released from any liability arising from or related to Grantee's use of the Land, including the duty to remove improvements and equipment and reclaim the Land. Upon relinquishment, Grantee shall not be entitled to any refund of money previously paid as Consideration under this Easement.

B. Notwithstanding the foregoing Paragraph 13.A, a relinquishment by Grantee of the Easement shall not be effective, and Grantor shall not have a right to possession or control of the Land and the improvements and equipment thereon, until the Facility has been decommissioned and all applicable federal and state licenses, including but not limited to the NRC License, have been terminated.

14. Indemnity. Grantee shall save and hold harmless, defend and indemnify the State of New Mexico, the Commissioner of Public Lands, and his agents or employees (collectively, "indemnitees"), in their official and individual capacities, from and against any and all liability, claims, losses, or damages arising out of or alleged to arise out of this Easement or the use and occupation of the Land by Grantee or Grantee's agents, licensees, permittees, employees, contractors (including subcontractors), and invitees; provided, however, that Grantee shall be under no obligation to indemnify or hold indemnitees harmless from: (i) liability, claims, losses or damages based on a third party claim that this Easement is invalid or void; and Grantee specifically waives any claims or damages against the Grantor arising out of or directly or indirectly related to third party claims that the Easement is invalid or void; or (ii) liability, claims, losses, or damages caused by the sole negligence or willful or intentional act(s) of indemnitees, or any of them. This Paragraph shall survive termination of this Easement.

15. Termination.

A. Grantor may terminate this Easement for material violation of any of the terms and conditions of this Easement ("default"); provided, however, that before any such termination shall become effective, Grantor shall mail to Grantee (or any approved assignee), by certified or registered mail addressed to the post office address of Grantee or such assignee shown by Land Office records, a sixty (60) day notice of default, specifying the default for which the Easement is subject to termination. No proof of receipt or further notice shall be necessary, and sixty (60) days after such mailing, this Easement shall terminate unless Grantee cures the

default within the sixty-day period; or, if the default cannot reasonably be remedied within sixty (60) days, Grantee submits for Grantor's approval within thirty (30) days of the default notice a plan for cure, including a schedule for expeditiously implementing such plan in order to cure the default as soon as reasonably possible. Grantor shall not unreasonably withhold approval of such plan. In the event of early termination of this Easement for any reason, Grantee shall not be entitled to any refund of money previously paid as consideration under this Easement, nor shall Grantee be relieved of its duty hereunder to remove its improvements and equipment and reclaim the Land in accordance with Paragraph 5 of this Easement.

B. Notwithstanding the foregoing Paragraph 15.A, a termination of this Easement shall not be effective, and Grantor shall not have a right to possession or control of the Land and the improvements and equipment thereon, until the Facility has been decommissioned and all applicable federal and state licenses, including but not limited to the NRC License, have been terminated.

16. Amendment. Any amendment of this Easement shall be in writing and shall be executed by each of Grantor and Grantee.

17. Limitation on Disclosure. Notwithstanding any other provision in this Easement, to the extent any obligation of Grantee under this Easement to disclose or otherwise tender to Grantor information or documents of any kind or to any other person ("Disclosure Obligation"), in Grantee's good faith judgment, based on written opinion of counsel, conflicts with, or is contrary to, Grantee's obligation under any Federal or state statute, regulation, policy, directive or order regarding safety, safeguards, security, national security or secrecy related to the Facility or otherwise to Grantee's activities on the Land ("Security Obligation"), the Security Obligation shall control; and Grantee shall not be required to comply with the Disclosure Obligation.

18. Existing Leases and Rights of Way Not Affected. This Easement does not modify or amend or change in any way those rights and obligations now or hereafter obtained by Grantee under separate instruments, including but not limited to (i) that certain Oil and Gas Lease No. B-4467 from Grantor to Gypsy Oil Company, to be assigned in part from Chevron U.S.A. Inc., successor in interest to Gypsy Oil Company, to Grantee; (ii) that certain Agricultural Lease No. GR-1855 from Grantor to Wallach Ranch, LLC, to be assigned in part to Grantee; and (iii) any other existing grants from Grantor or Grantee in the Land.

19. **Reporting.** Subject to the provisions in Paragraph 17 of this Easement, Grantee shall provide to Grantor copies of periodic reports made to NRC.

20. **Enforcement.** Venue for any court action bought by either party relating to this Easement shall be exclusively in New Mexico State Court, First Judicial District, Santa Fe County, New Mexico, after all administrative remedies are exhausted.

21. **Governing Law.** The provisions of this Easement shall be construed and enforced in accordance with New Mexico law.

22. **No Third Party Beneficiaries.** There are no third-party beneficiaries of any provision of this Easement.

23. **Exhibits.** All Exhibits attached to this Easement are incorporated herein by reference.

24. **Costs.** Grantee's performance of its obligations under this Easement shall be at Grantee's sole cost and expense.

25. **Severability.** If a court of competent jurisdiction determines that a provision or provisions of this Easement is or are invalid or illegal, such determination shall not invalidate or render unenforceable any other provision hereof; provided, however, that if enforcement of this Easement absent such invalid or unenforceable provision(s) would destroy an essential purpose of this Easement, then this Easement shall be deemed modified to the extent necessary to make this Easement valid or enforceable consistent with its true intent.

26. **Conflict between Federal and State Law.** If there is a conflict between Federal Requirements or other federal law and State Requirements or other state law applicable to the Land and/or the Facility, or Grantee's use of them, such that Grantee cannot reasonably comply with both Federal Requirements or other federal law and State Requirements or other state law, Grantee shall not be deemed to be in "default" under this Easement (as defined in Paragraph 15.A hereof) if Grantee does not comply with State Requirements or other state law until a resolution of the conflict is, and Grantee's obligations are, finally determined by negotiation or agreement among Grantee and the relevant agencies or by a court of competent jurisdiction and last resort; provided that Grantee shall comply with rulings of a court of competent jurisdiction during the pendency of such conflict, unless such ruling(s) is appealed to, stayed by or otherwise abated by a court of competent jurisdiction or by operation of law.

If there is a dispute over whether Federal Requirements or other federal law or State Requirements or other state law apply to the to the Land and/or the Facility, or Grantee's use of them, Grantee shall not be in "default" under this Easement (as defined in Paragraph 15.A hereof) if Grantee does not comply with State Requirements or other state law during the pendency of the dispute, provided that Grantee shall comply with rulings of a court of competent jurisidiction during the pendency of such conflict, unless such ruling(s) is appealed to, stayed by or otherwise abated by a court of competent jurisdiction or by operation of law.

Grantee shall pay the costs and expenses, and shall bear any liability related to, resolution of conflicts between, and disputes regarding the applicability of, Federal Requirements or other federal law and State Requirements or other state law.

GRANTOR:

NEW MEXICO COMMISSIONER OF PUBLIC LANDS

By: Patrick H. Lyons /KJK

Patrick H. Lyons, Commissioner

GRANTEE:

LOUISANA ENERGY SERVICES, L.P.

By: **SEE ATTACHED SIGNATURE AND ACKNOWLEDGMENT PAGE**

Exhibits

Exhibit A	=	Land subject to this Easement
Exhibit B	=	Improvements

SIGNATURE PAGE - EASEMENT

LOUISIANA ENERGY SERVICES, L.P.

By: _____

Its: E. James Ferland, President

District of Columbia
~~STATE OF~~)
) ss.
COUNTY OF)

The foregoing instrument was acknowledged before me this 20th day of August, 2003, by E. James Ferland, President of LOUISIANA ENERGY SERVICES, L.P., a Delaware limited partnership, on behalf of said limited partnership.

My Commission Expires:
12/14/2007

Roxanne B. Riker

ROXANNE B. RIKER NOTARY PUBLIC DISTRICT OF COLUMBIA

NOTARY PUBLIC
ROXANNE B. RIKER
Notary Public
District of Columbia
My Commission Expires December 14, 2007

GL ENVIRONMENTAL INC.

APPLICATION

FOR STATE OF NEW MEXICO LAND

TOWNSHIP 21 SOUTH, RANGE 38 EAST, N.M.P.M.

SECTION 32
NE1/4-NE1/4
NW1/4-NE1/4
SW1/4-NE1/4
SE1/4-NE1/4
NE1/4-NW1/4
NW1/4-NW1/4
SW1/4-NW1/4
SE1/4-NW1/4
NE1/4-SE1/4
NW1/4-SE1/4
SW1/4-SE1/4
SE1/4-SE1/4
NE1/4-SW1/4
NW1/4-SW1/4
SW1/4-SW1/4
SE1/4-SW1/4

LEA COUNTY, NEW MEXICO

RECEIVED
2001 AUG 22 PM 3:48
STATE LAND OFFICE
SANTA FE, N.M.

42974

EXHIBIT "A"

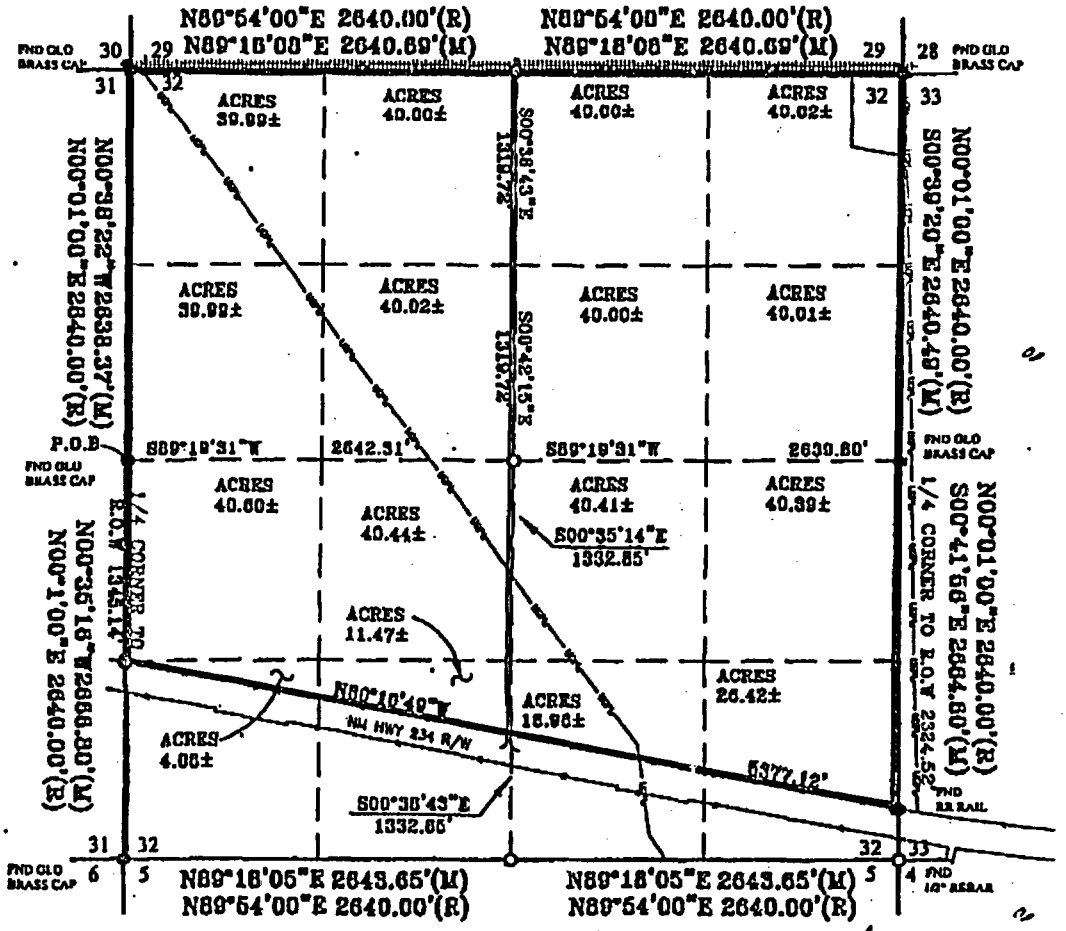

DANIEL R. MUTH
NEW MEXICO
13239
REGISTERED PROFESSIONAL SURVEYOR
8-14-03

SCALE 1" = 1000

0' 500 1000 2000

LEGEND	
○	SET MONUMENT 5/8" REBAR W/2" ALUM CAP MARKED "MUTH PLS 13239"
●	FOUND MONUMENT AS NOTED
—x—x—	BARBED WIRE FENCE
++++++++++	RAILROAD
—UGPL—	UNDERGROUND PIPE LINE
—UGT—	UNDERGROUND TELECOM

State of New Mexico, County of _____, I here by certify that this instrument was filed for record on:

The _____ Day of _____, 20_____ A.D.

At _____ O'Clock _____ M.

Book _____ Page _____

By _____, County Clerk

By _____, Deputy

PETTIGREW AND ASSOCIATES		
1110 N. GRIMES HOBBS, N.M. 88240 (505) 393-9827		
0	08/14/2003	PLOTTED
00	08/13/2003	PRELIMINARY PLAT
08/11/2003-08/12-2003		DATE OF SURVEY
REV	DATE	DESCRIPTION

INDEXING INFORMATION FOR COUNTY CLERK

OWNER: STATE OF NEW MEXICO
LOC: SEC. 32 T21S R38E

PLAT OF BOUNDARY SURVEY FOR
GL ENVIRONMENTAL INC.
4200 MEADOWLARK LANE
RIO RANCHO, NEW MEXICO 87124

PROJ. No.	2003.1076	DRN BY:	C. JOHNSON
DWG	SurveyGLEnvironmentalLDD\S32T21R38E.dwg		
BOOK	LEA CO. #1	SHT.	1 of 2

LEGAL DESCRIPTION

A PARCEL OF LAND WITHIN SECTION 32, TOWNSHIP 21 SOUTH, RANGE 38 EAST, NEW MEXICO PRINCIPAL MERIDIAN, LEA COUNTY, NEW MEXICO.

BEGINNIG at the one-quarter corner between Sections 31 and 32, (a found GLO brass cap on a 2-inch iron pipe);

THENCE N00°38'22W along the section line between Sections 31 an 32 a distance of 2638.37 feet to the corner of Sections 29, 31 and 30, (a found GLO brass cap on a 2-inch iron pipe);

THENCE N89°18'08"E along the section line between sections 29 and 32 a distance of 2640.69 feet to a set 5/8-inch rebar with a 2-inch aluminum cap marked "MUTH PLS 13239";

THENCE N89°18'08"E along the section line between sections 29 and 32 a distance of 2640.69 feet to the corner of Sections 28, 33, 32 and 29, (a found GLO brass cap on a 2-inch iron pipe);

THENCE S00°39'20"E along the section line between Sections 32 an 33 a distance of 2640.49 feet to the one-quarter corner between Sections 32 and 33, (a found GLO brass cap on a 1-inch iron pipe);

THENCE S00°41'56"E along the section line between Sections 32 and 33 a distance of 2324.52 feet to a found railroad iron marking the right-of-way for New Mexico State Highway No. 234; from whence the corner of Sections 33 and 32 of Township 21 South, Range 38 East, and Sections 4 and 5 of Township 22 South, Range 38 East (a found 1/2-inch rebar) bears S00 °41'56"E a distance of 340.08 feet;

THENCE N80°10'49"W along the observed northerly right-of-way line of New Mexico State Highway No. 234 a distance of 5377.12 feet to a point of intersection with the section line between Sections 31 and 32 (set 5/8-inch rebar with a 2-inch aluminum cap marked "MUTH PLS 13239"); from whence the the corner of Sections 31 and 32 of Township 21 South, Range 38 East, and Sections 6 and 5 of Township 22 South, Range 38 East (a found GLO brass cap on a 2-inch iron pipe) bears S00 °35'16"E a distance of 1321.66 feet;

THENCE N00°35'16"W along the section line between Sections 31 and 32 a distance of 1345.14 to the POINT OF BEGINNING

Said Parcel CONTAINS 542.80 ACRES more or less

CERTIFICATE OF SURVEY-

"I, Daniel R. Muth, New Mexico Professional Surveyor, hereby certify that this Boundary Survey Plat was prepared from an actual ground survey performed by me or under my supervision, that this survey is true and correct to the best of my knowledge and belief, that this Boundary Survey Plat and the field survey upon which it is based meet the Minimum Standards for Surveying in New Mexico, and that this survey is not a land division or subdivision as defined in the New Mexico Subdivision Act. This is a Boundary Survey Plat of an existing tract or tracts.

Daniel R. Muth NMPS# 13239

DANIEL R. MUTH NEW MEXICO 13239 REGISTERED PROFESSIONAL SURVEYOR

14 Aug 2003
Date

RECEIVED 2003 AUG 14 PM 3:45 STATE OFFICE

(5521)

State of New Mexico, County of Lea, I here by certify that this instrument was filed for record on:

The 14th Day of August, 20 03 A.D.

At 8:55 O'Clock A M.

Book 1 Page 566

By Melinda Hughes, County Clerk

By R. Johnson, Deputy

4474

PETTIGREW AND ASSOCIATES 1116 N. GRANDE HOBBS, N.M. 88240 (505) 393-9827	INDEXING INFORMATION FOR COUNTY CLERK	PLAT OF BOUNDARY SURVEY FOR GL ENVIRONMENTAL INC. 4200 MEADOWLARK LANE RIO RANCHO, NEW MEXICO 87124
0 — 08/14/2003 — PLOTTED 00 — 08/13/2003 — PRELIMINARY PLAT 8/11/2003-08/12/2003 — DATE OF SURVEY REV — DATE — DESCRIPTION	OWNER: STATE OF NEW MEXICO LOC: SEC. 32 T21S R38E	PROJ. No. 2003.1076 — DRN BY: C. JOHNSON DWG SurveyGLEnvironmentalNDOS32T21R38E.dwg BOOK LEA CO. #1 — SHT. 2 of 2

COPY

NEW MEXICO STATE
COMMISSIONER OF PUBLIC LANDS
AGREEMENT REGARDING LAND USE RESTRICTION OR CONDITION

This Agreement Regarding Land Use Restriction or Condition ("Agreement") is entered into effective August 22, 2003 by and between the New Mexico Commissioner of Public Lands (together with its successors and assigns, "Commissioner") and Louisiana Energy Services, L.P., a Delaware limited partnership (together with its successors and assigns, "LES") whose address is 1133 Connecticut Ave. NW, Suite 200, Washington, D.C. 20036.

RECITALS

A. On August 22, 2003, the Commissioner executed Grant of Easement and Right of Way No. 28583 pursuant to which the Commissioner granted to LES an easement and right-of-way over, on and to the land described in Exhibit A to this Agreement ("Land").

B. Paragraph 6.C of the Grant of Easement and Right of Way provides that, subject to certain terms and conditions, the Commissioner shall execute and record in the records of the State Land Office a Land Use Restriction or Condition that provides that, absent LES's prior written consent, (i) the Commissioner shall neither exercise the Commissioner's rights under Paragraph 6.B(1) of the Grant of Easement and Right of Way nor exercise the Commissioner's right to lease or otherwise dispose of or encumber the Land or any interest incident thereto, for any purpose, or grant additional easements, rights-of-way and grants across, under or over the Land, including without limitation, the development of any sand and gravel, coal, caliche, humate, oil and gas or other minerals and (ii) there shall be no surface disturbance of the Land and no right to explore for, mine, develop and/or produce oil, geothermal resources, gas and/or minerals during the term of the Grant of Easement and Right of Way.

C. The Commissioner and LES are entering into this Agreement pursuant to Paragraph 6.C of the Grant of Easement and Right of Way.

AGREEMENT

NOW, THEREFORE, FOR GOOD AND ADEQUATE CONSIDERATION, THE RECEIPT AND SUFFICIENCY OF WHICH IS ACKNOWLEDGED, THE COMMISSIONER AND LES AGREE:

1. Absent LES's prior written consent, (i) the Commissioner shall neither exercise the Commissioner's right to explore for, mine, develop and produce minerals such as sand and gravel, coal, caliche, humate, oil and gas or other minerals related to the Land nor exercise the Commissioner's right to lease or otherwise dispose of or encumber the Land or any interest incident thereto, for any purpose, or grant additional easements, rights-of-way and grants across, under or over the Land, including for the development of any sand and gravel, coal, caliche, humate, oil and gas or other minerals and (ii) there shall be no surface disturbance of the Land and no right to explore for, mine, develop and/or produce oil, geothermal resources, gas and/or minerals related to the Land during the term of the Grant of Easement and Right of Way.

2. As good and adequate consideration for this Agreement, LES shall pay to the Commissioner Five Thousand and no/100 Dollars ($5,000.00) per year, beginning on August 22 of 2008 and continuing on August 22 of each year thereafter up to and including August 22 of 2037, or of each year in succession thereafter during which Grantee occupies and uses the Land, unless the Grant of Easement and Right of Way is earlier terminated or relinquished.

3. This Agreement shall be recorded in the records of the State Land Office and in the real property records of Lea County, New Mexico.

4. The term shall begin on the date on which the Commissioner executes this Agreement and shall end on August 22, 2038, or so long thereafter as LES occupies and uses the Land, unless the Grant of Easement and Right of Way is earlier terminated or relinquished; provided that if the Grant of Easement and Right of Way is terminated by a sale or exchange of the Land to LES or to Lea County, New Mexico, (a) both the restrictions and conditions in this Agreement and LES's obligation to pay the consideration therefor in the amount, and for the time, set forth in this Paragraph shall survive and (b) the instrument conveying the Land shall expressly recite the restrictions set forth in this Agreement.

5. If a court of competent jurisdiction determines that a provision or provisions of this Easement is or are invalid or illegal, such determination shall not invalidate or render unenforceable any other provision hereof; provided, however, that if enforcement of this Easement absent such invalid or unenforceable provision(s) would destroy an essential purpose of this Easement, then this Easement shall be deemed modified to the extent necessary to make this Easement valid or enforceable consistent with its true intent.

6. This Agreement shall be binding upon, and shall inure to the benefit of, the Commissioner and LES and their respective assigns and successors in interest.

Executed in duplicate.

NEW MEXICO COMMISSIONER OF PUBLIC LANDS

By: Patrick H. Lyons

Patrick H. Lyons, Commissioner

THIS SPACE INTENTIONALLY LEFT BLANK

LES SIGNATURE PAGE FOR LURC

LOUISANA ENERGY SERVICES, L.P.

By: _____
E. James Ferland, President

DISTRICT OF COLUMBIA)
) ss.
)

This instrument was acknowledged before me on November 19, 2003 by E. James Ferland, President of LOUISIANA ENERGY SERVICES, L.P. a Delaware limited partnership.

_____
NOTARY PUBLIC

My commission expires:

February 28, 2008

Exhibit A Land subject to this Agreement

GL ENVIRONMENTAL INC.

APPLICATION

FOR STATE OF NEW MEXICO LAND

TOWNSHIP 21 SOUTH, RANGE 38 EAST, N.M.P.M.

SECTION 32
NE1/4-NE1/4
NW1/4-NE1/4
SW1/4-NE1/4
SE1/4-NE1/4
NE1/4-NW1/4
NW1/4-NW1/4
SW1/4-NW1/4
SE1/4-NW1/4
NE1/4-SE1/4
NW1/4-SE1/4
SW1/4-SE1/4
SE1/4-SE1/4
NE1/4-SW1/4
NW1/4-SW1/4
SW1/4-SW1/4
SE1/4-SW1/4

LEA COUNTY, NEW MEXICO

42974

EXHIBIT "A"

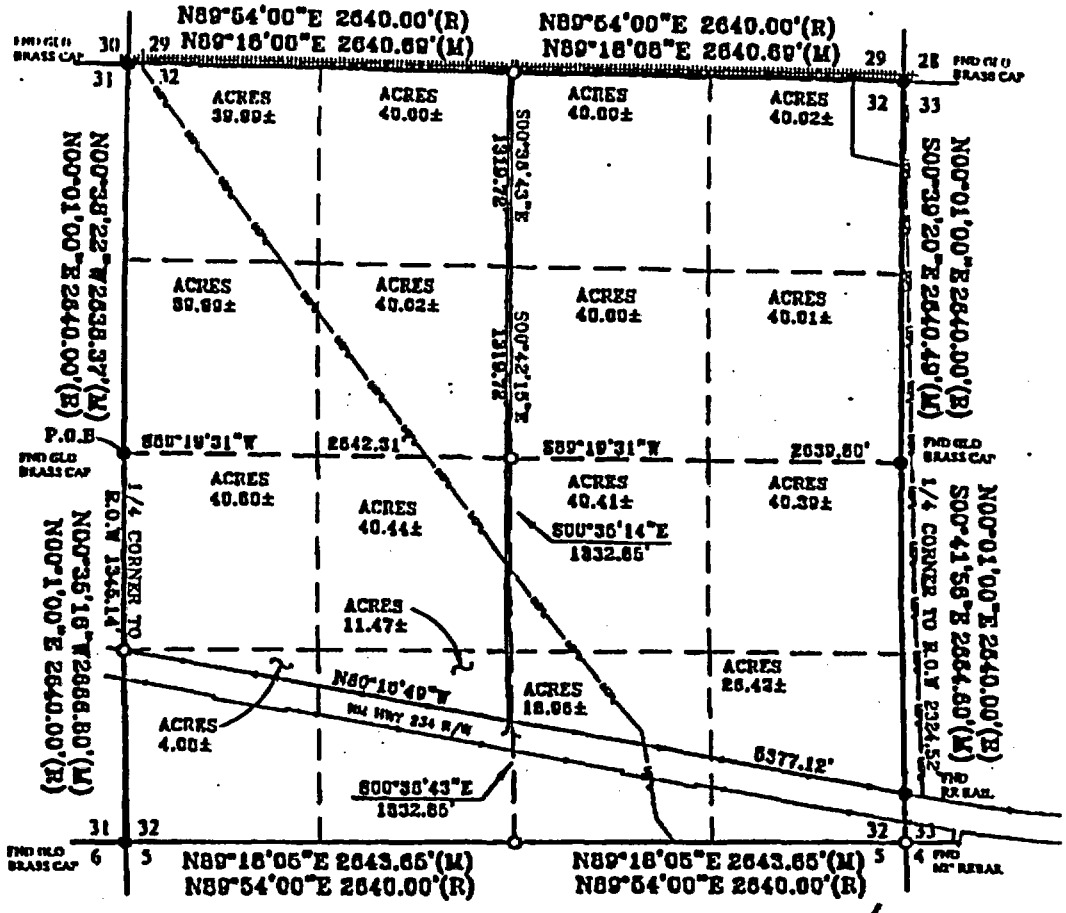

DANIEL R. MUTH NEW MEXICO 13238 REGISTERED PROFESSIONAL SURVEYOR 8-14-03

SCALE 1" = 1000

0' 500 1000 2000

LEGEND	
○	SET MONUMENT 5/8" REBAR W/ 1" ALUM CAP MARKED "MUTH PLS 13238"
●	FOUND MONUMENT AS NOTED
—x—	BARBED WIRE FENCE
++++++++	RAILROAD
—UGP—	UNDERGROUND PIPE LINE
—UGT—	UNDERGROUND TELECOM

State of New Mexico, County of _____, I hereby certify that this instrument was filed for record on:

The _____ Day of _____, 20 _____ A.D.

At _____ O'Clock _____ M.

Book _____ Page _____

By _____, County Clerk

By _____, Deputy

PETTIGREW AND ASSOCIATES

REV	DATE	DESCRIPTION
6	08/14/2003	PLOTTED
90	08/13/2003	PRELIMINARY PLAT
08/12/2003-08/12/2003		DATE OF SURVEY

INDEXING INFORMATION FOR COUNTY CLERK

OWNER: STATE OF NEW MEXICO
LOC: SEC. 32 T21S R35E

Exhibit A

FLAT OF BOUNDARY SURVEY FOR
GL ENVIRONMENTAL INC.
4200 MEADOWLARK LANE
RIO RANCHO, NEW MEXICO 87124

PROJ. No.	2003.1076	DRN BY:	C. JOHNSON
DWG	Survey GLEnvironmental N.DWG 32T21 R35E.dwg		
BOOK	LEA CO. #1	SHT.	1 of 2

LEGAL DESCRIPTION

A PARCEL OF LAND WITHIN SECTION 32, TOWNSHIP 21 SOUTH, RANGE 38 EAST, NEW MEXICO PRINCIPAL MERIDIAN, LEA COUNTY, NEW MEXICO.

BEGINNIG at the one-quarter corner between Sections 31 and 32, (a found GLO brass cap on a 2-inch iron pipe);

THENCE N00°38'22W along the section line between Sections 31 an 32 a distance of 2638.37 feet to the corner of Sections 29, 32, 31 and 30, (a found GLO brass cap on a 2-inch iron pipe);

THENCE N89°18'08"E along the section line between sections 29 and 32 a distance of 2640.69 feet to a set 5/8-inch rebar with a 2-inch aluminum cap marked "MUTH PLS 13239";

THENCE N89°18'08"E along the section line between sections 29 and 32 a distance of 2640.69 feet to the corner of Sections 28, 33, 32 and 29, (a found GLO brass cap on a 2-inch iron pipe);

THENCE S00°39'20"E along the section line between Sections 32 and 33 a distance of 2640.49 feet to the one-quarter corner between Sections 32 and 33, (a found GLO brass cap on a 1-inch iron pipe);

THENCE S00°41'56"E along the section line between Sections 32 and 33 a distance of 2324.52 feet to a found railroad iron marking the right-of-way for New Mexico State Highway No. 234; from whence the corner of Sections 33 and 32 of Township 21 South, Range 38 East, and Sections 4 and 5 of Township 22 South, Range 38 East (a found 1/2-inch rebar) bears S00 °41'56"E a distance of 340.08 feet;

THENCE N80°10'49"W along the observed northerly right-of-way line of New Mexico State Highway No. 234 a distance of 5377.12 feet to a point of intersection with the section line between Sections 31 and 32 (set 5/8-inch rebar with a 2-inch aluminum cap marked "MUTH PLS 13239"); from whence the the corner of Sections 31 and 32 of Township 21 South, Range 38 East, and Sections 6 and 5 of Township 22 South, Range 38 East (a found GLO brass cap on a 2-inch iron pipe) bears S00 °35'16"E a distance of 1321.66 feet;

THENCE N00°35'16"W along the section line between Sections 31 and 32 a distance of 1345.14 to the POINT OF BEGINNING

Said Parcel CONTAINS 542.80 ACRES more or less

CERTIFICATE OF SURVEY-

"I, Daniel R. Muth, New Mexico Professional Surveyor, hereby certify that this Boundary Survey Plat was prepared from an actual ground survey performed by me or under my supervision, that this survey is true and correct to the best of my knowledge and belief, that this Boundary Survey Plat and the field survey upon which it is based meet the Minimum Standards for Surveying in New Mexico, and that this survey is not a land division or subdivision as defined in the New Mexico Subdivision Act. This is a Boundary Survey Plat of an existing tract or tracts.

Daniel R. Muth NMPS# 13239

DANIEL R. MUTH NEW MEXICO 13239 REGISTERED PROFESSIONAL SURVEYOR

14 Aug. 2003
Date

(5521)

State of New Mexico, County of Lea, I hereby certify that this instrument was filed for record on:

The 14th Day of August, 20 03 A.D.

At 8:55 O'Clock A M.

Book 1 Page 566

By Melinda Hughes, County Clerk

By R. Johnson, Deputy

PETTIGREW AND ASSOCIATES			INDEXING INFORMATION FOR COUNTY CLERK	PLAT OF BOUNDARY SURVEY FOR GL ENVIRONMENTAL INC. 4200 MEADOWLARK LANE RIO RANCHO, NEW MEXICO 87124
0	08/14/2003	PLOTTED	OWNER: STATE OF NEW MEXICO	PROJ. No. 2003.1074 DRN BY: E. JOHNSON
00	08/13/2003	PRELIMINARY PLAT	LOC: SEC. 32 T21S R38E	DWG Survey\GLEnvironmental\LDOS\32T21R38E.dwg
08/11/2003-08/12/2003		DATE OF SURVEY		BOOK LEA CO. #1 SHT. 1 of 2
REV	DATE	DESCRIPTION	Exhibit A	

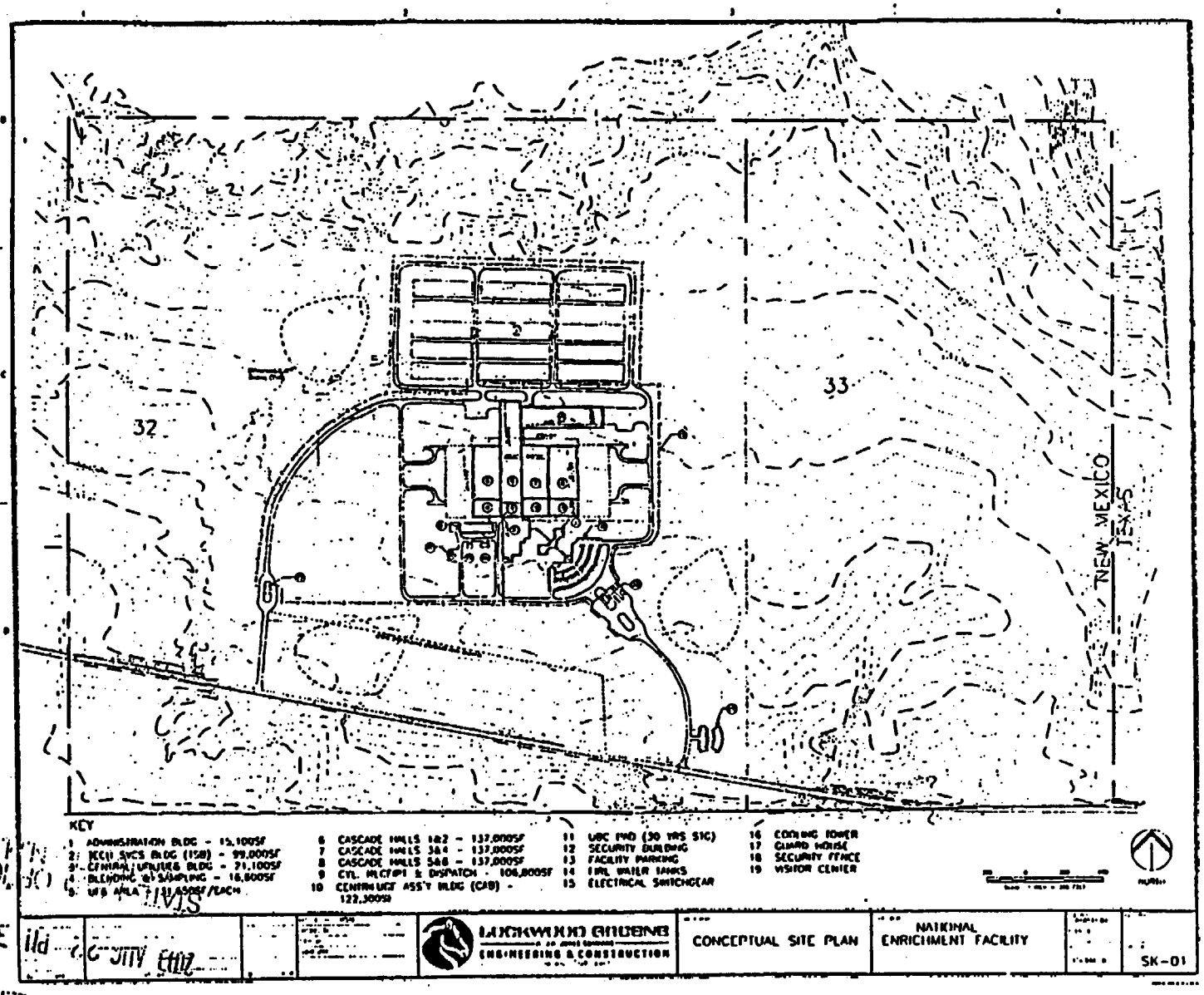
32
33
NEW MEXICO
TEXAS
KEY
1 ADMINISTRATION BLDG - 15,100SF
2 RECH SVCS BLDG (150) - 99,000SF
3 CENTRAL UTILITIES BLDG - 71,100SF
4 BLENDING & SAMPLING - 16,800SF
5 UF6 AREA - 11,450SF/EACH
6 CASCADE HALLS 1&2 - 137,000SF
7 CASCADE HALLS 3&4 - 137,000SF
8 CASCADE HALLS 5&6 - 137,000SF
9 CYL. RECEIPT & DISPATCH - 106,800SF
10 CENTRIFUGE ASS'Y BLDG (CAB) - 122,300SF
11 UBC PAD (30 YRS SIC)
12 SECURITY BUILDING
13 FACILITY PARKING
14 FIRE WATER TANKS
15 ELECTRICAL SWITCHGEAR
16 COOLING TOWER
17 GUARD HOUSE
18 SECURITY FENCE
19 VISITOR CENTER
LOCKWOOD GREENE
ENGINEERING & CONSTRUCTION
CONCEPTUAL SITE PLAN
NATIONAL ENRICHMENT FACILITY
SK-01

Exhibit B