CHANGE NO: 80062466 REVISION NO.: 3

FORM 1
ENGINEERING CHANGE COVER SHEET

CHANGE PACKAGE TYPE: ☐ ADMINISTRATIVE ☐ EQUIVALENT ☐ TEMPORARY ☒ DESIGN ☐ NON-POWER BLOCK
IS THIS A PRELIMINARY RELEASE (REVISION 0 OR GREATER)? YES ☐ NO ☒

FIELD WORK REQUIRED? YES ☒ NO ☐

TITLE: EPU Piping Vibration Monitoring Installation Package

STATION/ UNIT: ☒ Hope Creek ☐ Salem 1 ☐ Salem 2 ☐ Salem 3 ☐ Salem Common
☐ Salem/Hope Creek ☐ Other PSEG Nuclear facility

CLASSIFICATIONS:
Important-to-Safety: YES ☒ NO ☐
[Salem] Q-Listed YES ☐ NO ☐ N/A
[Hope Creek] Q ☒ Qs ☐ Qsh ☐ F ☐ R ☐ N/A ☐

REVIEWERS/APPROVERS: (Type names and dates below, see SAP Operations for Electronic Signature)

RESPONSIBLE ENGINEER	REVIEWER/CHECKER	DESIGN VERIFIER	
Phil Stashak 12-15-04 (420)	R. Zielinskli 12-16-04 (422)	R.Vadhar 12-22-04 (424)	
INTERNAL PACKAGE APPROVAL (Internal packages only)	EXTERNAL PACKAGE APPROVAL (External packages only)	PSEG NUCLEAR FINAL ACCEPTANCE REVIEW (External packages only)	
N/A	J.Gorga (0401) 12-21-04	J. Bisti (0398) 12-23-04 M.Khan (0399)12-23-04	
SORC CHAIRMAN	SORC MEETING NUMBER	STATION APPROVAL	STATION APPROVAL
N/A	N/A	N/A	N/A
DEPARTMENT/SPECIALTY INTERFACE			
ALARA (0381) Ken Watson 12-17-04	Implementation & Test (0382) F.Soberano 12-22-04	EPU Electrical 12-17-04 Larry Hajos (0396)	Pipe Stress (0400) P. Stashak 12-21-04
Cable Mgmt (0383) Paul Finch 12-16-04	Electrical (0384) Govindh Modi 12-16-04	Electric Load Mgmt. M. Quadir (0385) 12-16-04	OPS (0388) M. Shaffer 12-22-04
Digital Systems (0386) Paul Beckman 12-20-04	EPU I&C Digital (0387) Jim Metro 12-21-04	Station Planning (0389) Lane Corbett WCMP 12-16-04	Engineering Mechanical (0390 K. Mathur 12-21-04

Discipline / Specialty Interface (cont'd)

HC-NSSS System Engineering (0391) Pete Kordziel 12-15-04	Component Engineering Mark Ghose (0398) 12-20-04	Valve Group Doug Groves (0397) 12-20-04	Fire Protection Mark Adair (0393) 12-17-04

Penetration Seals Mark Adair (0394) 12-17-04	Seis II/I Gary Luh (0392) 12-17-04	

AFFECTED DOCUMENT PREPARERS/REVIEWERS		
DISCIPLINE	PREPARER	REVIEWER
Civil/ Structural (S)	J. Lu 12-16-04	Rohit Vadhar 12-16-04
Digital (K)	N/A	N/A
Electrical (E)	Bob Mollica 12-16-04	Phil Stashak 12-16-04
Instrument & Controls (I)	Jerry Almonte 12-17-04	Jim Metro 12-17-04
Mechanical (M)	Ben May 12-16-04	Phil Stashak 12-16-04
Pipe Stress/ Supports (H)	Ben May 12-16-04	Phil Stashak 12-16-04
Programmatic (P)	N/A	N/A

CHANGE NO: 80062466 REVISION NO.: 3

FORM 2

ENGINEERING CHANGE TABLE OF CONTENTS

Change Package Section	Page Number
SUMMARY (Form 3)	5
DESIGN BASIS/DESIGN BASIS IMPACT (Form 4)	10
DETERMINATION OF EQUIVALENCY (Form 5)	N/A
AFFECTED DOCUMENTS LIST (ADL) (Form 6)	45
MATERIALS LIST (Form 7)	48
NC.NA-AP.ZZ-0059(Q) REVIEW (Include completed forms from NC.NA-AS.ZZ-0059(Q) as applicable)	54

LIST ANY SUPPLEMENTAL RECORDS SUBMITTED FOR SCANNING:

Design Input Record (Design & Temporary Changes only)-	SUP 01
Data Acquisition System (DAS) Description -	SUP02
Endevco Hardware: Accels, Charge Converter, High Temp. Wire, Signal Conditioner	SUP03
Design Considerations Checklist	SUP04
Pictogram - Monitoring Locations- Drywell Elevation 77'	SUP05
Pictogram - Monitoring Locations- Drywell Elevation 100'	SUP06
Pictogram - Monitoring Locations- Drywell Elevation 112'	SUP07
Pictogram - Monitoring Locations -Drywell Elevation 121'	SUP08
Pictogram – Monitoring Locations – Turbine Bldg. Steam Tunnel El. 123'	SUP09
Cable – Cable USA Data Sheet	SUP10
Insulation Data And Insulation Modification Sketches	SUP11
Accel Direction Pictograms	SUP12
Deleted	SUP 13
Wiring Block Diagram	SUP 14

PMCR	SUP 15
Penetration Seal Work Release	SUP 16
Deleted	SUP 17
Accelerometer Mounting Block Diagram	SUP 18
Strain Gage General Info	SUP 19
Strain Gage Installation Instructions	SUP 20
Drywell Vibration Monitoring Cable,Conduit, DAS Details	SUP 21
Accelerometer/Strain Gage FLOCs, Cable#s, Node Points,Pen#s	SUP 22
UFSAR Change Notice HCN 04-060	SUP 23
3300 XL Proximity Probe	SUP24
TK15 Power Supply	SUP25

FORM 3
SUMMARY

DCP Revision 3

Revisions (2 & 3) incorporated the request for more accelerometer monitoring locations in the drywell. The turbine building scope as described in revision 1 has not changed. The number of accelerometers increased from 48 to approximately 100 in the drywell. The increase in monitoring focused on the Recirc, RHR, and its components. In addition to the increase in accelerometers on the Recirc/RHR piping, accelerometers were added to the " B Recirc Pump Motor, FO60A & B valve actuators, FO50A valve, FO77 valve actuator. Proximity probes were also added to valves FO60A, FO60B, FO77 to monitor the valve displacements because of vibration. DCP 80072763 provided the mounting details of the proximity probes. Since the number of accels increased, the amount of cable in the drywell increased, and another electrical penetration was needed to route the instrument signals form the drywell to data acquisition systems. Electrical penetration 1CW200 was used for the Main Steam and Feedwater instrumentation. The original penetration 1BW202 was used for all Recirc/RHR accelerometer cables. The 1BW202 penetration is on the Recirc "B" Pump Side of the drywell. The 1CW200 penetration is on the Recirc 'A' Pump side of the drywell. Due to the location of the two penetrations, it was decided to use two data acquisition systems (64 channel max) for the drywell instrumentation. Conduit routes the cable from the 1CW200 to a data acquisition system located in the Reactor Building Room 4310. Conduit routes the cable from the 1BW202 penetration to a data acquisition system located in the Reactor Building Room 4303. The effects of the increase in cable in the drywell is discussed as it relates to the ECCS Strainer Blockage. The relocation of the data systems required new Fire Hazards Analysis (rooms 4310 & 4303) and a revision to the SAR HCN 04-060 to update FHA Tables included in the SAR Appendices. Penetration seals and new PSWRs were required in order to breach seals and reseal them for the conduit routings. The valve group was added to the DCP review since accelerometers are being mounted on the valve actuators. ADs were added / revised to document the addition of accelerometers on the valves, pump, and the increase in the number of accels on the piping. Supplemental Records 5 thru 8 were revised to provide locations for the new accels in the drywell. Supplemental Records 11 & 12 were revised to show the orientation of the new accelerometers on the piping , equipment, and the provide insulation sketches for the new high hat designs. Supplemental Record 14 was revised to provide wiring details. Supplemental Record 16 was revised to include the new PSWRs. Supplemental Record 18 was revised to provide the accel mounting block diagram for the Recirc Pump Motor. Supplemental Record 22 was created to incorporate the information originally provided in Tables 1 & 2 and Supplemental Records 13 and 17. The UFSAR Change Notice is provided in Supplemental Record 23.

Supplemental Record 21 was designed to provide direction for routing conduit from the electrical penetrations to the data acquisition systems located in room 4303 and 4310. The specification for the proximity probe sensors, and power supply are documented in Supplemental Record 24 and 25 respectively.

DCP Revision 2 (Preliminary Release)

This DCP revision was released to continue work in the field while the DCP Revision 3 was assembled.

DCP Revision 1

Steam Dryer failures have occurred at several plants due to implementation of Extended Power Uprate (EPU) and the associated increase in steam flow. To help facilitate the determination of the loads on the steam dryer due to the acoustic wave (pressure pulsations) in the main steam lines, strain gages will be installed on each of the four main steam lines. The acoustic wave (pressure pulsation) is thought by the industry to be a major contributor to the steam dryer cracking that has occurred at EPU power levels in several plants. This DCP was revised to incorporate the addition of strain gages to the Main Steam piping in the Turbine Building. Supplemental Records 13,14, 17, 19, 20 and the Critical Software Package were revised/added to update/provide strain gage information. Supplemental Record 18 was added to aid in the Implementation & Test Plan. Supplemental Record 10 was revised for editorial purposes. Affected Document (AD) H03, and the DIR were also revised to incorporate the strain gage information. The ALARA specialty checklist was revised to provide additional installation "wrench hours". Supplemental Record 11 was revised to incorporate comments. This document was revised in its entirety.

I. Description of Change

This Design Change Package (DCP) has been produced as a result of The PSEG Extended Power Uprate Project, in conjunction with General Electric (GE), Task Report T-0318, ongoing EPU industry issues, and recurring plant vibration issues. Piping system monitoring will occur inside the drywell (room 4220), turbine building steam tunnel elevation 123' (room 1405/3491); and in feedwater water heater room 1504 at elevation 137'. The following piping systems will be monitored for vibration; Main Steam (drywell and turbine building), Feedwater (drywell and turbine Building), Extraction Steam, Recirc (and RHR inside drywell) and their associated valves and attached piping. The current scope monitors approximately 40 locations using about 100 accelerometers in the drywell. Twenty-four accelerometers at ten locations, and twenty strain gages at eight locations will be monitored in the turbine building. The drywell instrumentation will be connected through drywell electrical penetrations 1BW202 and 1CW200 to data acquisition systems located in rooms 4303 and 4310. Cables are routed in conduits on the reactor building side of the installation through penetrations N-4330-002, S-4310-005 and N-4303-0, to the console mounted DAS systems. The DAS's will be powered via convenience outlets when data is to be obtained. Based upon constructability walkdowns, another DAS setup will sit atop a cart, in the turbine building room 4101, near the turbine building steam tunnel at elevation 123'. Cable inside the turbine building steam tunnel will be routed to this DAS through an existing grouted wall penetration (N-1401-001). The hardware, software, and data acquisition systems installed in accordance with this DCP are stand-alone systems. Information obtained from the DASs is not input into any permanent plant hardware or software system. Therefore, there is no effect on the Main Steam, Feedwater, Extraction Steam, Recirc or RHR System Design Functions from the monitoring of these piping systems.

II. Operational Condition/Mode required for Implementation

This plant must be in an outage in order to implement this DCP. The installation of the vibration monitoring devices and hardware on the piping systems does not compromise the integrity of the systems. However, access to the piping systems, turbine building wall penetration, and containment electrical penetration requires an outage.

III. Technical Specification Action Statements Affected During Implementation

There is no effect on the Main Steam, , Feedwater, Extraction Steam, Recirc, RHR and associated components and attached piping System Design Functions during implementation of this DCP.This modification does not require any changes to the

Technical Specifications and complies with statements and requirements of the Technical Specifications.

IV. Implementation and Testing Acceptance Criteria

Procedure HC.MD-AP.ZZ-0004(Q) "General Guidelines For Temporary Power And Communication Cables Installation And Removal" provides a method of installing temporary cable and ensuring personnel and equipment safety. In addition, E-1408 "Wire and Cable Notes and Details provides guidance for installing cable both inside and outside the Drywell.

In accordance with Procedure HC.MD-AP.ZZ-0004(Q) the following guidelines will be adhered to:

- Cable is not to be run in cable trays.
- One-inch separation is maintained between cable and class 1E conduit.
- No separation required between cable and non-class 1E conduit.
- Cables will be routed off the floor to prevent physical damage and create trip hazards.
- Cables will not be routed where water accumulates.
- Cable spans will be restrained to limit swinging during seismic events.
- Cable will be supported using structural steel, support steel, equipment supports, cable trays as long as separation criteria is met. The span of cable between supports should not exceed 10 feet.
- Engineering will conduct walkdowns to ensure supporting requirements and cable separation criteria are met.

In addition to the above, the following installation steps will be followed;

In the vicinity of the accelerometer and remote charge converter on the piping, the cable will be banded to the insulation jacketing with stainless steel banding.
As a minimum, the cables will be labeled for identification near the remote charge converter, on both sides of the CTMT penetration (for drywell installation), and near the data acquisition systems.

Cables will be supported from structural steel, support steel, equipment supports, cable trays (Non-1E) with appropriate cable straps. Raychem may be use as a sleeve for the stainless steel tie-wraps. On the reactor building side of the CTMT penetration, conduit will be installed between the cabinet and CTMT penetration. This will provide support for the cable. In the turbine building the cable will be banded to the pipe and then supported off of structural and building steel using unistrut, unistrut clamps, and tie wraps. Separation Criteria is not a requirement in the turbine building. All Welding shall be in accordance with the Nuclear Business Unit Welding and Brazing Manual. Expansion anchor bolts will be used to anchor support structures for cable in the Turbine Building Steam tunnel vestibule. The Cut Rebar & Core Drilling Program (NC.DE-TS.ZZ-4007(Q)) will be adhered to, ensuring that no Rebar is cut w/o engineering approval per the program.

Raychem will be used to encapsulate the Endevco Remote Charge Converters, BNC connectors, and BNC Breakouts to preclude the possibility of FME concerns. Each accelerometer, before it is screwed into the mounting block will be tested using a handheld shaker. A 1g acceleration at a frequency of 159hz will be applied through the shaker to the accel. This acceleration and frequency will be confirmed at the Digital Acquisition System (DAS). Different results at the DAS will require troubleshooting. Once the accelerometer (and wiring) is proven to be functional, the accelerometer is torqued to the mounting block and the mounting block tapped (pinged) to ensure the accelerometer and wiring were not damaged when the accel was mounted to the block. Once all the accels on a particular mounting block are proven functional, the "high hat" can be installed over the mounting block and attached securely to the pipe insulation jacketing. This process is repeated for all mounting blocks.

The strain gages will be spot welded to the Main Steam pipe in the turbine building using a Portable strain gage welding and soldering unit. They are installed per details provided in Supplemental Record 19 , the NBU Welding and Brazing Manual, and calibrated per Supplemental Record 20.

The proximity probes shall be calibrated IAW with manufacturing recommendation documented in VTD 327412. The power supplied to the proximity sensors shall be -17.5 to -26 VDC.

If any of the above restrictions or installation steps cannot be met, engineering should be contacted for clarification.

It is important to note that this DCP installs vibration monitoring equipment; instrumentation, cable, accelerometers, and digital acquisition systems to obtain vibration information on specific piping systems. This DCP does not include information pertaining to when the tests will be performed, nor does it provide testing acceptance criteria for the piping being monitored. This information is provided in the Test Plan.

V. Pictogram

See Figures 1 thru 7.

VI. Training

The Data Acquisition System will be operated by trained contract personnel. However, plant personnel can be trained to operate the system once it has been installed, tested and its performance, verified. Plant personnel were trained on a similar system in support of the recent Recirc/RHR Vibration Monitoring TMOD.

FORM 4

DESIGN BASIS ANALYSIS/DESIGN BASIS IMPACT

DESIGN BASIS ANALYSIS & IMPACT:

In 1986 and 1987, in accordance with Regulatory Guide 1.68 (Initial Test Programs For Water Cooled Nuclear Power Plants) and UFSAR section 14.2, Hope Creek performed a test and startup program. The test and startup program consisted of three phases: the Phase I Construction Verification Test Program, the Phase II Preoperational Test Program, and the Phase III Power Test Program. The Construction Verification Test Program commenced during and immediately following construction. The objective of this program was to verify proper installation of structures, components, and equipment in accordance with design specifications. The program included static and dynamic tests, calibration, initial energization, functional checks, hydrostatic tests, meggering of cables/equipment and flushing or cleaning of oil systems. The Preoperational Test Program (Phase II) began with component / system turnover and terminated with commencement of initial fuel load. It consisted of two parts: the initial system operating phase, and the system and integrated testing phase. During the initial system operating phase all activities including operational energization of systems, run-in of pumps, verification flushing and chemical cleaning of piping, and implementation of programs for preventive maintenance and system layup were performed. During System and Integrated Testing Phase preoperational test procedures on individual and integrated systems were performed, baseline data for inservice inspections were completed, and operating and surveillance procedures were finalized. The Power Test Program - Phase III commenced with the start of nuclear fuel loading and terminated with the completion of power ascension testing. Formal tests, denoted as startup tests, were conducted during this program. These tests confirmed the design basis and demonstrated, that the plant would operate and respond to anticipated transients and postulated accidents as designed. Startup testing was sequenced to ensure that plant safety was not dependent upon the performance of untested structures, systems, or components.

This Design Change Package (DCP) has been produced as a result of The PSEG Extended Power Uprate Project, in conjunction with General Electric (GE), Task Report T-0318, ongoing EPU industry issues, and recurring plant vibration issues. Piping system monitoring will occur inside the drywell (room 4220), turbine building steam tunnel elevation 123' (room 1405/3491), and in feedwater water heater room 1504 at elevation 137'. The following piping systems will be monitored for vibration to ensure that the vibratory levels of the selected piping systems are within acceptable limits for those operating conditions anticipated during service.; Main Steam (drywell and turbine building), Feedwater (drywell and turbine Building), Extraction Steam, Recirc (and RHR inside drywell. and their associated components and attached piping).

Drywell Monitoring (Room 4220)

The Main Steam, and Feedwater systems are to be monitored because of their significant increases in flow to achieve increases in thermal power. In addition to these systems, the Recirc/RHR system inside the drywell will be monitored due to past and present plant vibration issues. The small bore piping attached to the Recirculation (Recirc) suction elbows has experienced numerous vibration-related cracks, since plant startup. The vibration levels have been correlated to specific Recirc pump speeds and Operating Procedures have been revised to limit system operation at those pumps speeds. Work performed within several previous DCPs implemented for the small bore Recirc piping included the addition of tie-back supports to minimize differential pipe movement, and the addition of strain gages and accelerometers to monitor pipe motion. Notification 20209339 documents recent issues with the Recirc /RHR piping and associated valves inside the drywell.

The current scope monitors approximately 40 locations using about 100 accelerometers and 3 proximity probes in the drywell. . The instrumentation will be connected through drywell electrical penetrations 1BW202 and 1CW200 routed through conduit to data acquisition systems located in rooms 4303 and 4310. The DAS's will be powered via convenience outlets when data is to be obtained. Functional Locations (F-LOCS) were created for each accelerometer and proximity probes. Insulation at the monitored large bore piping locations will be temporarily removed. Strapping, banded around the piping and prefabricated accelerometer mounting brackets will be installed at the large bore pipe monitoring locations. The accelerometers will be installed. Then, the insulation will be reinstalled. See Fig.1 and Supplemental Record 11. Small-bore piping will be instrumented using band clamps (similar to hose clamps) to secure the accelerometers to the piping. The weight of the accelerometers and mounting configurations are insignificant in comparison to the weight of the piping being monitored. Therefore, there is no impact on the dynamic response of the piping systems with the monitoring and mounting devices installed.

Turbine Building Monitoring Information

Twenty-four accelerometers at ten locations will be monitored in the turbine building. Main Steam, Feedwater, and Extraction Steam will be monitored at 9 locations in the turbine building steam tunnel rooms 1405 / 3491 Elevation 123'. One location in Feedwater Heater Room 1504 Elevation 123' will be monitored. Functional Locations (F-LOCS) were created for each accelerometer. Insulation at the monitored large bore piping locations will be temporarily removed. Strapping, banded around the piping, and a prefabricated accelerometer mounting bracket, will be installed at the large bore pipe monitoring locations. The accelerometers will be installed. Then, the insulation will be reinstalled. See Fig.1.

In addition, twenty strain gages with protective covers will be installed on all four Main Steam pipes. Two strain gages will be installed in the hoop direction at eight locations on the main steam lines, two locations on each main steam line. In addition, two strain gages will be installed in the longitudinal direction at two locations to measure the amount of bending on the pipe. The insulation at the specified locations will be temporarily removed, the strain gages spot-welded to the pipe, the protective cover slipped over the strain gage, and the insulation reinstalled.

The cable from both Elevation 123' and 137' will be routed to a cart mounted DAS located in the room adjoining the turbine building steam tunnel – room 1401. The cable from the feedwater heater room at elevation 137' can be routed through floor grating located near room 1504 to the DAS on elevation 123'. Cable inside the turbine building steam tunnel will be routed through an existing grouted wall penetration (N-1401-001) to the DAS located in the adjoining room (room 1401).

ECCS Suppression Pool Strainer Blockage

The ECCS is designed to provide protection against postulated loss-of-coolant accidents (LOCAs) caused by ruptures in reactor coolant pressure boundary (RCPB) piping. The ECCS injection network consists of an HPCI system, a core spray system, Automatic Depressurization (ADS) and the Low Pressure Coolant Injection (LPCI) mode of the RHR system. The installation of any commodities within the drywell creates concerns that these commodities can be dislodged, transported to the suppression pool, and clog the suppression pool strainers. The clogging of the suppression pool strainers could hinder or disable the ability of the plant to respond to accidents requiring ECCS operation. Engineering Evaluation H-1-BB-MEE-1168 revision 1 identifies insulation sources inside the drywell and determines the amount of insulation transported to the drywell due to applicable pipe breaks identified in UFSAR Section 3.6. Several High Energy Pipe Breaks were evaluated for insulation damage potential which included; Main Steam, Feedwater, Recirc Suction, Recirc/RHR Line, Recirc Suction riser. Three breaks were chosen for more detailed analysis; Recirc Suction, Feedwater, and Recirc Suction Riser. The following summarizes the results of this analysis provided in Table 8.3.10 of Engineering Evaluation H-1-BB-MEE-1168;

Recirc suction pipebreak 365.7 ft^3
FW Break 244.5 ft^3
Recirc Suction Riser 404.5 ft^3

This DCP will install approximately 15000 ft. of cable in the drywell. Using a cable OD of ¼", and assuming that all of the cable is damaged and falls into the wetwell, a total volume of approximately 5 ft^3 is added to the wetwell.

The results tabulated in table 8.3.10 reveal that locations and angles relative to the pipe breaks were used as parameters in determining impacted targets (pipe) and damaged insulation. Based upon these values we see that 78% of the insulation damaged below the grating at elevation 100' became wetwell debris, compared to 28% of the insulation damaged above elevation 100'. Most of the insulation damaged above elevation 100' was considered to be screened by the grating. Therefore it is extremely conservative to consider that all of the cable added to the drywell regardless of its location relative to the postulated pipe break locations is delivered to the wetwell. Even with this gross assumption, less than 5 cubic feet of material becomes potential ECCS strainer blockage debris. This is less than a 1.5% of the wetwell debris calculated for the Recirc Suction riser pipe break scenario. The calculated volume of wetwell debris attributed to the added cable is negligible. No further evaluation is required.

Electrical

General

The vibration monitoring equipment will be installed in the fall of 2004 (1R12) for baseline data acquisition. In the 2006 (1R13) outage the Extended Power Uprate (EPU) will be implemented, and the monitoring equipment will be used during power ascension. The equipment will most likely be removed during the following refueling outage (1R14). See Figures 6 & 7 for typical wiring configurations. Since this is not a permanent installation the Genesis Report is not impacted, the cable code is not initiated and terminal boxes will be labelled with the DCP number, only.

Cable Routing

Procedure HC.MD-AP.ZZ-0004(Q) "General Guidelines For Temporary Power And Communication Cables Installation And Removal" provides a method of installing temporary cable and ensuring personnel and equipment safety.

In accordance with Procedure HC.MD-AP.ZZ-0004(Q) the following guidelines will be adhered to:
Cable is not to be run in cable trays.
One-inch separation is maintained between cable and class 1E conduit.
No separation required between cable and non-class 1E conduit.
Cables will be routed off the floor to prevent physical damage and create trip hazards.
Cables will not be routed where water accumulates.
Cable spans will be restrained to limit swinging during seismic events.
Cable will be supported using structural steel, support steel, equipment supports, cable trays as long as separation criteria is met.
Alara concepts will be utilized in cable routing per walkdowns performed during last refueling outage and recent mini -outage with installation engineers and Installation personnel.
Engineering will conduct walkdowns to ensure supporting requirements and cable separation criteria is met.

In addition to the above, the following installation steps will be followed;

Raychem Splices shall be IAW E-1408-0 "Wire and Cable Notes and Details".

In the vicinity of the accelerometer and remote charge converter on the piping, the cable will be banded to the insulation jacketing with stainless steel strapping.

As a minimum, the cables will be labeled for identification near the remote charge converter, near the CTMT penetration (for drywell installation), and near the data acquisition systems. Due to the lack of space on the labels, the first characters of the cable label have been omitted. When data is to be obtained, the data acquisition systems (DASs) in the reactor and turbine buildings will be powered by 120 VAC convenience outlets. Data will normally be obtained over 2 minute intervals. When the DAS is not be used it will be unplugged.

Cables will be supported from structural steel, support steel, equipment supports, cable trays with cable straps made of stainless steel or tefzel. A review of primary containment raceway drawings reveals that there are no Class 1E raceways inside primary containment. Class 1E cable is routed in conduit in primary containment. Therefore, attaching the accelerometer cable to cable tray supports is acceptable and does not violate separation criteria. On the reactor building side of the CTMT penetration, conduit will be installed between the data acquisition systems and the CTMT penetration. This will provide support for the cable. In the turbine building the cable will be banded to the pipe and then supported off of structural and building steel using unistrut, unistrut clamps, and tie wraps. Separation Criteria is not a requirement in the turbine building.

Near the accelerometers, the Endevco Remote Charge Converter, BNC connector, and BNC Breakout will all be wrapped in shrink tubing . Normally the Endevco Remote Charge Converter is wrapped in a teflon sleeve. The BNC breakout has teflon as an insulator in the connector and PVC is used in the insulation material for the pigtail wires which are 7 inches in length. The BNC Breakout (Pomona Model # 4970-See Supplemental Record 10) does not meet IEEE 383 or UL910 requirements. However, this part has been used with great success at other nuclear facilities performing similar vibration analysis. Shrink tubing will be used to encapsulate the Endevco Remote Charge Converter, BNC connector, and BNC Breakout to preclude the possibility of FME concerns. In addition, all components installed in this DCP will most likely be removed in refueling outage 1R14.

If any of the above restrictions or installation steps cannot be met, engineering should be contacted for clarification.

The cable used is IEEE-383 flame rated CableUSA 18AWG, 2 conductor with a drain wire rated for 302°F. This cable does not have a radiation rating but has been used successfully at several other nuclear facilities for similar applications. For some applications Okonite 18AWG, 2 conductor with a drain wire (IEEE-383 rated) was substituted for the CableUSA wire.

The High Temperature Endevco Cable 3075M6, used between the Remote Charge Converter and the Accelerometers has a temperature rating in excess of 900°F. This cable is constructed of a fiberglass jacket over a stainless outer sheath. Both ends of the cable are terminated with a glass-fired connector. Although flame tests have not been performed on this item, the lack of combustible items in the construction of this

cable, along with its high temperature rating assures compliance with the intent of the UL flame test requirements.

Containment Penetrations 1BW202 & 1CW200

In determining the impact of this DCP on the containment penetration two concerns are applicable; type of cable and circuitry (class 1E vs. non-class1E) and penetration short circuit analysis.

Type of Cable

Containment penetrations 1BW202 and 1CW200 are I&C penetrations with Non-class 1E cables connected to it. None of the accelerometer cables are part of a Class 1E circuit. Therefore we are in compliance with UFSAR section 8.1.14.5 that states non-class 1E circuits are not routed in penetrations containing class 1E circuits.

Short Circuit Analysis

An evaluation has been performed to ensure the integrity of the containment electrical penetration 1BW202 & 1CW200. Calculation E- 7.13 was reviewed to determine the impact of connecting the wiring for the accelerometer, remote charge converters, and proximity probes to Containment Electrical Penetrations 1BW202 & 1CW200. Calc E-7.13 is titled "Penetration Assembly Protection". The piezoelectric accelerometer is a self-generating device that requires no external power source for operation. It is connected to the DAS system through a remote charge converter and uses a high impedance cable. There is an external 18 volt power supply to the remote charge converter which carries milliamps through high impedance cable. The 3 proximity probes are also low powered devices with a total load rating of 24 VDC @60 milliamps. These high impedance circuits carry milliamp signals, only. This type of circuit has been addressed in calc E-7.13 Section h pages 6 and 7. The section states "...the continuous ratings for these penetrations are considerably higher than the maximum short circuit current they may be expected to experience." Therefore, the milliamp circuits installed per this DCP cannot create a short circuit challenge to the penetration. No further evaluation of the penetration is required.

Vibration Monitoring Equipment

Data Acquisition System

The DAS is a PC Pentium 4 based high speed digital data acquisition system. The system will accept a minimum of 48 channels of analog signals. The input channels are low passed (anti-alias) filtered, then fed into the analog to digital converter (ADC) where each channel is amplified and digitized at a rate of 1024 samples per second per channel which provides useable bandwith from 1 to 300 hz. The ADC is a single card installed in the computer. The filters and ADC card are manufactured by National Instruments. The digitized data from the ADC is recorded directly to the hard disk. Data is stored on the hard disk in a binary format to maximize data storage capacity. Each file is time and date stamped and provided with a unique, update file name. After storage to the hard disk, the vibration data can be written to a CD-RW drive. The desktop PC

provided with the system will meet the following minimum requirements: Intel Pentium 4, CPU 3.0 GHz, 512 MB RAM, 80 GB hard Drive, 48X Internal CD Rom, internal 16x10x40x CD-RW drive, 3.5" Floppy, mouse, keyboard, 17" SVGA Monitor with 1024 x 768 resolution. The operating system is Windows 2000 Professional. The VDAS software is based on National Instrument's Lab view graphical interface software that provides virtual instrument to acquire, real time process and store high-speed digital data.

All operations are mouse controlled. Any two channels of data may be selected and observed on the monitor in real time as time history or frequency spectrum with both root-mean-square and maximum and minimum values indicated. After two minutes of recording, the system stops recording. The file is identified by the file name, which includes a date and time stamp. Also, a description of the test is entered form the keyboard. Along with the data file is a text file with all the VDAS settings (gain, conversion factors, sample rate, number of channels). At the end of the test the operator transfers the data to the CD drive for permanent storage. Data analysis is performed after the test. The root mean square (rms) values for each accelerometer channel for each test condition are extracted from the recorded data. The rms values are printed out in a spreadsheet along with the acceptance criteria and a ratio of the rms to the acceptance criteria. The spreadsheet is labeled with the test condition, time and date of the test.

Remote Charge Converter (RCC) (Endevco Model 2771B-1)

The two ounce stainless steel encased device transforms a high impedance charge output, such as a signal from a high temperature piezoelectric accelerometer, into a low impedance voltage proportional to the transducer' charge. The RCC is powered by the constant current source inside the signal conditioner. Allowable operating range for this unit is -40°F to 212°F . The unit can operate up to 95% relative humidity and can handle radiation fields up to 1 x 10 E6 rads integrated gamma. The HCGS Environmental Design Criteria D7.5 Table 1(Drywell) lists the maximum temperature of the drywell as 150°F, the humidity is 90% and the radiation field is 2.3E7rads/40 years. The HCGS Environmental Design Criteria D7.5 Table 6 (turbine building steam tunnel rooms 1405/3491 lists the maximum temperature 130°F, the humidity is 90% and the radiation field is 3.5E6rads/40 years. The RCC is typically provided with a Teflon sleeve. For this application, since Teflon is restricted, the RCC will be encased with a Raychem Sleeve configuration in lieu of the Teflon sleeve. The remote charge converter is strapped to the bracket or pipe insulation within 12 feet of the accelerometer such that there is no relative displacement between the accelerometer and the charge converter. The accelerometer operates in a charge mode and produces picocoulcombs (PcCbs) proportional to the acceleration. The RCC converts the PcCbs to volts. While in the charge mode the accelerometer lead cable is sensitive to relative motion (produces charge) and the cable capacitance is a factor in the noise calculation (longer cable between accel and RCC creates more capacitance and higher noise). The best practice

is to keep the accelerometer lead short and tied down. Also the lead is a special type of coaxial cable (in this case Endevco High temperature cable assemblies Model # 3075M6) that minimizes capacitance and charge creation and is generally not long. Between the RCC and the DAS, the cable is insensitive to noise and motion.

Signal Conditioner (Endevco Model 2793)
The signal conditioning device provides an 18VDC, 4-10mA bias power to each charge converter and receives the vibration signal from the accelerometers, The unit provides DC Power to the RCC and performs no amplification, integration or filtering. The shield for the entire cable from charge converter to DAS will be grounded only at the DAS. The signal conditioners are installed in the cabinet or cart in the Reactor Building (room 4322) and Turbine Building room 1401.

Accelerometers (Endevco Model 7703A-100)
The accelerometers weigh 1 ounce and have a stainless steel case. The temperature measurement range is -67°F to 550°F. The unit is hermetically sealed with the signal return isolated for the case. The unit can operate at 100% relative humidity and can handle radiation fields up to 10E8 rad integrated gamma flux. The unit response is directional along the axis of the mounting stud, so the mounting arrangement, and number of accelerometers, depends on the piping location needs. Piezoelectric accelerometers are light compact sensors that measure vibration using a mass mounted on a piezoelectric crystal. The output is proportional to acceleration input and is low so it requires a charge amplifier in the lead. Higher temperature applications require an additional charge amplifier. The accelerometers meet the environmental requirements, have prior success in BWR operating environments and are adequate to obtain the required information.

Proximity Transducer System (Model 3300 XL)

The 3300 XL system consist of 3 main parts: probe, sensor and cable. The 3300 XL system is capable of both static (position) and dynamic (vibration) measurements. This system provides an output voltage directly proportional to the distance between the probe tip and the observed conductive surface. The temperature measurement range is –60°F to 351°F for the probes and –31°F to 185°F for the sensor. The unit can operate at 100% relative humidity. The 3300 XL proximitor sensor is highly immune to radio frequency interference and therefore will not require special shielded conduit or metallic housing. The 3300 XL proximity sensor will be supplied with 24 VDC using a Bently Nevada TK15 power supply. The proximity probes will be used to measure the displacements of the valve stems for F077, F60A and F60B relative to the its valve's stem protector. DCP 80072763 provided the mounting details of the proximity probes.

Fire Protection

The overall HCGS fire protection program is based on the evaluation of potential fire hazards throughout the plant and on the effects of postulated fires on the performance of safe shutdown functions. Consistent with other safety requirements, systems, structures, and components, including those required for safe shutdown are designed and located to minimize the probability and effect of fires. The Auxiliary Building, Reactor building, and Turbine building are separated from each other by 3-hour fire walls. Redundant safety related components are separated form each other and the rest of the plant by 3-hour fire barriers, and or separated by 20 feet. The following is a list of designated Fire areas per Fire Area drawings M-5114, and M-5115 for rooms where cable and monitoring equipment are added;; drywell room 4220 (RB7), reactor building rooms 4303 (RB2) and 4310 (RB1), turbine building rooms 1401(TB1), 1405/3491(TB1), and 1504(TB1).

Although we are adding cable to the drywell and safety related equipment is prevalent throughout the drywell, no fire hazards analysis is performed for the drywell per Table 9A-1 " Fire Hazards Analysis". The drywell is inerted during operation, making a fire impossible. The main concern for fire inside the drywell occurs during refueling and maintenance operations. During refueling and maintenance operations in the drywell, portable fire extinguishers, in addition to the hose stations, are adjacent to the work area and readily available for use by plant personnel. Self-contained breathing apparatus is provided near the containment entrances for firefighting personnel. Therefore, no further analysis of the drywell for implementation of this DCP is required.

Cables will be added to Turbine Building Rooms 1401, 1405/3491 and 1504. Another DAS sitting atop a cart will be stored in room 1401. Per Fire Area Drawings M-5115, these rooms are designated as Fire Area TB1. No safety related equipment exists in any of these rooms. These rooms are not listed in Table 9A-4 "Fire Areas and Associated Room Numbers" and Table 9A-1 "Fire Hazards Analysis Summary". Therefore, no Fire Hazards Analysis is required for installation of the cable and/or monitoring equipment in these rooms.

Vibration of Drywell piping and components will require the use of two digital acquisition systems (DAS) that will be installed in reactor building rooms 4303 and 4310. The DAS's located in rooms 4303 and 4310 (Reactor Building) consist of metal consoles, (non combustibles) and combustibles which include; desktop computers, data acquisition hardware components, and an assumed amount of paper, pencils, and nearby reference materials. A review of the Fire Hazards Analysis performed for DCP 4EC-3186 (installed vibration monitoring equipment and DAS to measure recirc vibration) shows that the weight assumptions for combustibles are applicable for this installation. Therefore, it is assumed that the equipment will add approximately 50 pounds of combustible plastic to the room. It is also assumed that paper, pencils, and reference materials will add an additional 25 pounds of combustible material to the

room. This correlates to an additional heat load of 1.1 E6 Btus (Fire Load) added to rooms 4303 (Fire Area RB2) and 4310(Fire Area RB1). The weight of combustible commodities and the fire loads will be updated in Table 9A-1 " Fire Hazards Analysis Summary" (sheet 29), Table 9A-8 " Fire Hazards Analysis Tabulation Summary" (sheet 17), and Table 9A-9 "Fire Hazards Analysis Tabulation" (sheet 17) for the new fire loading in rooms 4303 and 4310. See SAR Change Notice HCN 04-060.

Room 4303 (RB2)

Local Affect (Room 4303)
Paper – 8000Btu/Lb x 25 Lbs = 200,000 BTUs
Plastic – 18,000 Btu/Lb x 50 Lbs = 900,000 BTUs
Total = 1.1E6 BTUs
Area of Room = 2304.5 ft^2

New Load (Paper + Plastic) = 1.1E6 BTUs / 2304.5 ft^2 = 477 BTUs/ ft^2

Cable weight = 27# / 1000 ft, Assume 70 cables with 10' of cable exposed = 700' of exposed cable, equivalent to approx. 19 lbs

(New Load Cable) = 19 Lbs x 5000 BTUs / Lb = 9.5E4 BTUs

9.5E4 BTUs / 2304.5 ft^2 = 41 BTUs/ ft^2New Load (Paper + Plastic + Cable) = 477

BTUs/ ft^2+ 41 BTUs/ ft^2 = 518 BTUs/ ft^2

Existing Load = 70,000 BTUs/ ft^2

Existing Load + New Load = 70,000 BTUs/ ft^2+ 518 BTUs/ ft^2= 70,518 BTUs/ ft^2

New Fire Duration = 70,518 BTUs/ ft^2 / 80,000 BTUs/ ft^2 /hr x 60 min/hr = 52.9 minutes

Old Fire Duration = 52.5 minutes rounded to 53 minutes

Fire Area Affect - RB2

New Combustibles (Paper + Plastics + Cables) =1.1E6 BTUs + 9.5E4 BTUs = 1.195E6 BTUs
Area(RB2) = 26908 ft^2

Increased Load = 1.195E6 BTUs / 26906 ft^2 = 44.4 BTUs/ ft^2

Fire Severity Increase = 44.4 BTUs/ ft^2 / 80000 BTUs/ ft^2 / hr x 60 min/hr = .03 minutes

Room 4310 (RB1)

Local Affect (Room 4310)

Paper – 8000Btu/Lb x 25 Lbs = 200,000 BTUs
Plastic – 18,000 Btu/Lb x 50 Lbs = 900,000 BTUs
Total = 1.1E6 BTUs

Area of Room = 3226 ft^2

New Load (Paper + Plastic) = 1.1E6 BTUs / 3226 ft^2 = 341 BTUs/ ft^2

Cable weight = 27# / 1000 ft, Assume 70 cables with 10' of cable exposed = 700' of exposed cable, equivalent to approx. 19 lbs

(New Load Cable) = 19 Lbs x 5000 BTUs / Lb = 9.5E4 BTUs

9.5E4, BTUs / 3226 ft^2 = 29 BTUs/ ft^2

New Load (Paper + Plastic + Cable) = 341 BTUs/ ft^2+ 29 BTUs/ ft^2 = 370 BTUs/ ft^2

Exisiting Load = 57,700 BTUs/ ft^2

Existing Load + New Load = 57700 BTUs/ ft^2+ 370 BTUs/ ft^2= 58070 BTUs/ ft^2

New Fire Duration = 58070 BTUs/ ft^2 / 80,000 BTUs/ ft^2 /hr x 60 min/hr = 43.5 minutes

Old Fire Duration = 43 minutes

Fire Area Affect - RB1

New Combustibles (Paper + Plastics + Cables) =1.1E6 BTUs + 9.5E4 BTUs = 1.195E6 BTUs

Area(RB2) = 31145 ft^2

Increased Load = 1.195E6 BTUs / 31145 ft^2 = 38 BTUs/ ft^2

Fire Severity Increase = 38 BTUs/ ft^2 / 80000 BTUs/ ft^2 / hr x 60 min/hr = .03 minutes

The increase in combustibles due to the values for paper, plastics and cable from the data acquisition system in room 4310 is 1.195E6 BTUs. For the overall affect on the Fire Area RB1 this value is compared to the combustible of 911.7E6 and a Fire Severity of 22 minutes listed in Table 9A-8 sheet 1. The increase in Fire Severity based upon a combustible load increase of 1.195E6 BTUs for Fire Area RB1 is .03 minutes. The localized affect of the increase in combustibles for room 4310 is an increase in the Fire Severity of .5 minutes. The new value is 43.5 minutes compared to the existing value of 43 minutes in Table 9A-8 sheet 17. The increases in combustible loads and the resultant affects on Fire Severity at both the local level (affect on room 4310) and on the overall Fire Area (RB1) are negligible. Installation of the data acquisition in room 4310 is acceptable.

The increase in combustibles due to the values for paper, plastics and cable from the data acquisition system in room 4303 is 1.195E6 BTUs. For the overall affect on the Fire Area RB2 this value is compared to the combustible of 829E6 and a Fire Severity of 23 minutes listed in Table 9A-9 sheet 1. The increase in Fire Severity based upon a combustible load increase of 1.195E6 BTUs for Fire Area RB2 is .03 minutes. The localized affect of the increase in combustibles for room 4303 is an increase in the Fire Severity of .5 minutes. The new value is 53 minutes compared to the existing value of 52.5 minutes in Table 9A-9 sheet 17. The increases in combustible loads and the resultant affects on Fire Severity at both the local level (affect on room 4303) and on the overall Fire Area (RB2) are negligible. Installation of the data acquisition in room 4303 is acceptable.

Penetration Seal

The cables for the accelerometers in the Turbine Building Steam Tunnel (room 1405) will be routed through penetration seal N-1401-001 to a DAS mounted on a cart in adjacent room 1401. Penetration Seal N-1401-001 is listed as a 3-hour fire seal. The grouted seal will be partially removed, conduit inserted, and cable routed through the conduit. The seal will be resealed and the conduit sealed with foam in accordance with Penetration Seal Work Release Nos. 5326 & 5327(see Supplemental Record No. 16). Therefore, restoring the penetration seal to its 3-hour fire rating. The cables for the accelerometers in the Reactor Building from containment electrical penetration 1BW200 will be routed in conduit from the containment penetration to a DAS located in room 4303. Penetration 4303-002 will be partially removed and resealed IAW PSWR 5501.The cables for the accelerometers in the Reactor Building from containment electrical penetration 1CW200 will be routed in conduit from the containment penetration to a DAS located in room 4310. Penetrations N-4330-002 and S-4310-005 will be partially removed and resealed IAW PSWRs 5502 and 5503.

Insulation

The Main Steam, Feedwater, Extraction Steam piping, Recirculation (attached RHR ,and associated components) will be instrumented with approximately 130 accelerometers at approximately 50 locations. Insulation at the monitored large bore piping locations will be temporarily removed. Strapping, banded around the piping and prefabricated accelerometer mounting brackets will be installed at the large bore pipe monitoring locations. (Small-bore piping will be instrumented by using band clamps (hose clamps) in lieu of mounting blocks to secure the accelerometers to the piping.) The accelerometer(s) will be installed. Then, the insulation will be reinstalled. Supplemental Record 11 depicts the manner in which the insulation will be reconfigured for each size pipe OD, insulation thickness, and insulation jacket material. The insulation and jacket materials will be reconfigured with "high-hat" designs that will allow for the space occupied by the mounting blocks and accelerometers, and at the same time restore the insulation and jacketing to their original insulating performance. Therefore, environmental room temperatures where the accelerometers are mounted on the piping are not affected.

In addition, twenty strain gages with protective covers will be installed on all four Main Steam pipes. Two strain gages will be installed in the hoop direction at eight locations on the main steam lines, two locations on each main steam line. In addition, two strain gages will be installed in the longitudinal direction at two locations to measure the amount of bending on the pipe. The strain gages are approximately 1" long and .35" in width. The strain gage covers are approximately 1/8" in height. The insulation at the specified locations will be temporarily removed, the strain gages spot-welded to the pipe, the protective cover slipped over the strain gage, and the insulation reinstalled. Since the insulation where the strain gages are to be installed is rigid insulation (Main Steam Piping, Turbine Building, 3 ½" thick) the insulation in the region of the strain gages will be required to be notched. A maximum of ½" in height over an area of 12" in length and 10" in width will be notched to allow for installation of the strain gages and covers. The volume of insulation to be removed at each of the 8 locations (approximately 60 cubic inches over an area of 12 inches in length) is negligible, compared to the existing 4156 cubic inches of insulation per foot of pipe. Since the performance of the insulation is directly related to the amount of insulation on the pipe, the 1.5% reduction in volume of insulation for 1 foot of pipe at 8 locations will have no impact on environmental room temperatures where the strain gages are installed. For all practical purposes, there is no reduction in performance of the insulation where the strain gages are installed.

Pipe Stress

A modal analysis was performed on the as-modeled piping system to determine natural frequencies and mode shapes. The sensor (accelerometers) locations were determined based on a review of the mode shapes. The accelerometer locations correspond to node points with high-calculated modal displacements. Other factors used to determine accelerometer locations were; installation accessibility including ALARA concerns, minimizing the impact to insulation, and redundancy of accelerometers.

The static loads such as weight and thermal expansion were not considered since these loads do not contribute to the steady-state vibration of the piping system. Additionally, seismic and relief valve loads, inertia and anchor movements are not considered since these loads are transient dynamic loads and do not contribute to the steady state vibration loads. Each sensor will measure the acceleration in one direction. The directions were selected on the results of the modal analysis. The lower modes of a piping system typically govern the response. The directions were selected to coincide with locations of high response and the maximum modal displacement.

To reduce installation time, the accelerometers will be located as low as reasonably possible to minimize scaffolding. Additionally the accelerometers that measure different directions will be grouped at each location to minimize the mounting block locations. At least two accelerometers will be used to measure vibration in each direction on the main run of pipe.

The mounting block configuration, with accelerometers, high temperature wire, and remote charge converter are typically banded to the piping as shown in Fig. 1. The weight of the accelerometers, remote charge converters and mounting block for any monitored location is less than 3.5 lbs, total. (Small-bore piping will be instrumented by using band clamps (hose clamps) in lieu of mounting blocks to secure the accelerometers to the piping.) This weight is insignificant to the lbs/ft of the pipe being monitored. The weights of the mounting hardware and monitoring devices will have no impact on the adjacent pipe supports. In addition, the weights of the mounting hardware and monitoring devices (including insulation "high hats") will have no impact on the dynamic effects of the piping they are monitoring. Therefore, the results obtained with the monitoring devices and hardware installed on the piping, are still valid for the piping when the monitoring devices and hardware are later removed.

Twenty strain gages will be installed on the Main Steam piping (two strain gages at six locations and four strain gages at two locations) in the Turbine Building. The strain gages will be used to measure the magnitude of the acoustic wave (pressure pulsation) thought by the industry to be a major contributor to the steam–dryer cracking that has occurred at EPU Power Levels in several plants. The strain gage and protective cover weigh a few ounces. There is no impact to pipe stresses or the dynamic response of the piping due to the addition of the strain gages and covers.

The following table summarizes the PSEG stress calculations with monitored piping, and the corresponding vendor technical documents that document the monitoring locations.

PSEG Calculation / Revision	Calculation Description	Vendor Technical Document
C-0141 / 10, C-0142 / 10	Recirc Loop A + RHR, Recirc Loop B + RHR,	326528
C-0120 / 8	Feedwater Inside Drywell	326529
C-1921 / 11	Feedwater Outside Drywell	326530
C-1011 / 7	Extraction Steam Piping To FWHTR# 6	326527
C-0010 / 8	Main Steam Outside Drywell	326531
C-0122 / 8	Main Steam Line 'A' Inside Drywell, Including SRVs A,J,R	326532
C-0121 / 7	Main Steam Line 'B' Inside Drywell, Including SRVs B,K,F,P	326533

Table 3

Seismic II/I

This DCP installs vibration monitoring equipment in the Containment, Reactor and Turbine buildings. The vibration monitoring equipment consists of accelerometers inserted in mounting brackets banded to the pipe. (Small-bore piping will be instrumented by using band clamps (hose clamps) in lieu of mounting blocks to secure the accelerometers to the piping.) Each accelerometer requires a remote charge converter that will be banded to the outside of the insulation jacketing near the accelerometer. See Figure1. Each cable will be routed from an accelerometer / remote charge converter to its data acquisition systems using the guidelines found in Procedure HC.MD-AP.ZZ-0004(Q) "General Guidelines For Temporary Power And Communication Cables Installation And Removal". The cable will be banded to the pipe and then tied off to structural steel, support steel, equipment supports, cable trays (non-1E) with cable straps made of stainless steel or tefzel, as long as separation criteria is met. The drywell instrumentation will be connected through drywell electrical penetrations 1BW202 and 1CW200 to data acquisition systems located in rooms 4303 and 4310. The data

acquisition systems will be mounted in consoles restrained IAW NC.CC-AP.ZZ-0011(Q) to meet the seismic II/I requirement per DE-PS.ZZ-0011(Q).

A second DAS setup will sit atop a cart (in lieu of a hardware cabinet), in the turbine building room 4101 (see fig. 4), near the turbine building steam tunnel at elevation 123'. All carts to be used, will be restrained IAW NC.CC-AP.ZZ-0011(Q) to meet the seismic II/I requirement per DE-PS.ZZ-0011(Q).

DAS Software Package

The quality assurance for the project software is documented following the guidelines of PSEG Procedures "Software Quality Assurance" NC.NA-AP.ZZ-0064(Q) Rev.2, and PSEG Procedure "Software Life Cycle Planning & Implementation" NC.IN-AP.ZZ-1000 Rev. 0. In accordance with NC.NA-AP.ZZ-0064(Q) Rev.2 Attachment 1, the software is classified as Level B. Level B software is software that "Indirectly Effects Nuclear Safety." Level B is defined as "Those applications important to compliance with regulatory requirements, commitments or required by law, and whose failure to operate as expected may have an indirect impact on nuclear safety, individual safety or other requirements / laws." The applicable Software Quality Assurance (SQA) Elements of NC.NA-AP.ZZ-0064(Q) Rev.2 Attachment 2 are discussed in Structural Integrity Calc HC-04Q-109-001. The following SQA Elements are applicable; Configuration Of Custom Software, Testing Of Software, Error Notifications Following Delivery, Documentation, Training, and Records. In accordance with the requirements of NC.IN-AP.ZZ-1000(Q) Rev.0 "Software Life Cycle Planning & Implementation", Software Requirements Specification (SRS) and System Design Description (SDD) are addressed in Structural Integrity Calculations HC-04Q-109-002 and HC-04Q-109-003. Structural Integrity Calculations HC-04Q-109-001("Project-Specific QA Plan For Software Testing"), HC-04Q-109-002 ("Project-Specific Software Requirements Specification And Software Requirements Review") and HC-04Q-109-003 ("Project-Specific Software Design Description") are located in the PSEG Document Management System as Critical Software Package H-1-ZZ-SCS-0253 (ADS01). The Critical Software Package is divided into several volumes (sections) as listed below;

Volume 1 – Software Index Form
Volume 2 - Software Requirements Specification
Volume 3 - Software Design Description
Volume 4 - QA Plan for software testing
Volume 5 - System Backup
Volume 6 - System Manuals
Volume 7 - Test Implementation and Configuration Files
Volume 8 – Hardware Components CE Certificates

The following is a summary from the volumes of the Critical Software Package;

Volume 2 - Software Requirements Specification

The software shall run on Windows XP Professional operating system. The software shall include the following features:
• Accommodate two separate sets of transducer signals
• Read-in acquisition parameters from setup files
• Read-in transducer sensitivities and charge converter gains from setup
• Read-in allowable vibration levels from setup files
• Display simultaneously signals from any two channels either in time history or frequency spectrum format in engineering units
• Calculate and display in real time maximum, minimum and RMS values for two displayed channels
• Acquire simultaneously signals from up to 64 transducers in engineering units
• Acquisition duration shall be controlled by the operator
• Calculate the ratio of the acquired vibration signal vs. the allowable
• Produce a results file
• Produce a setup documentation file

Volume –3 - Software Design Description

The software requirements specified in Reference 4 shall be designed as follows:
• An input screen shall be created to allow the operator to specify the location of the transducer set. Selections shall be Drywell and Turbine Building
• An input screen shall be created to display the acquisition parameters that are read-in from the '** Config_General.txt' and '** Config Channels.txt' files, where '**' is either DW (Drywell) or TB (Turbine Building). The acquisition parameters are: sampling rate, channel address, channel input limits, number of channels, and high and low frequency bound defining the analysis band of interest
• An input screen shall be created to display the transducer sensitivities and charge converter gains that are read-in from the '** Config CF and Allowable.txt' file, where '**' is either DW (Drywell) or TB (Turbine Building).
• An input screen shall be created to display the allowable vibration levels that are read-in from the '** Config CF and Allowable.txt' file, where '**' is either DW (Drywell) or TB (Turbine Building).
• All configuration files shall be adequately controlled. They shall be setup during the system installation, tested, and controlled as a critical software document. Only a trained operator or an otherwise authorized user shall be permitted to alter its content.
• An acquisition screen shall be created capable of simultaneously displaying signals from any two channels. A toggle switch shall be included to allow the

operator to choose between time history or frequency spectrum format. All data shall be shown in engineering units.
• The software shall automatically calculate the maximum, minimum and RMS values of the streaming data for the two displayed channels. Displays for the calculated values shall be included on the acquisition screen.
• The software shall be able to simultaneously acquire signals from up to 64 transducers. The data shall be recorded in engineering units and stored to the computer hard drive. The data file naming shall be automatic and the name shall be the year, date and time of the file creation (yyyymmddhhmmss). The data file extension shall be dta. The data file format shall be binary.
• Acquisition duration shall be controlled by the operator. Control dial for acquisition duration shall be included on the acquisition screen. Acquisition shall be initiated by the operator. Initiation button shall be included on the acquisition screen. Acquisition termination shall happen automatically.
• Upon termination of acquisition, the software shall automatically calculate an RMS value for the specified frequency band for all recorded channels. Further, the software shall automatically calculate the ratio between the calculated RMS and the allowable vibration RMS.
• A results file shall automatically be created. The file shall contain tabulated listing of all recorded channels, their calculated RMS values, the allowable RMS value for each channel, the ratio between the calculated and allowable RMS, and an OK/Exceeds flag. The results file extension shall be res. The results file format shall be ASCII.
• A setup file shall automatically be created. The file shall contain tabulated listing of all the acquisition parameters, the transducer sensitivities and the charge converter gains, and the allowable vibration levels. The setup file extension shall be set. The setup file format shall be ASCII.

Volume – 4- QA Responsibilities

SI responsibilities are:
1. Configuration of custom software
2. Testing of software
3. Error notifications following delivery
4. Documentation
5. Training
6. Records

The above responsibilities are discussed in more detail, below. All other responsibilities, following delivery, are at the discretion of PSEG.

Configuration – SI will assemble a custom system for PSEG, per contract 4500226359 including Change Order 1. The system configuration is defined by the functional specifications of the system, provided in Appendix A.

Validation and Testing – The technical description, and test results for the delivered software will be provided in SI calc HC-04Q-301, to be included in the system documentation package. This document will also identify the project manager, the performer and the validation checker of the software. The validation and testing of the software will be done in accordance with Section 5.5 of Reference 2.

Error Notification – SI will provide error notification to PSEG for a period of years, from the date of delivery. An extension may be negotiated, if needed. Additionally, SI will notify PSEG of future upgrades, as applicable. This will be done in accordance with Section 5.10 of Reference 2.

Training – SI will train PSEG personnel on the installation and operation of the system, per the terms of the contract. This will be done in accordance with the Section 5.6 of the Reference 2.

Documentation – The documentation provided will include Software Requirements Specification (SRS) and Software Requirements Review (SRR) as specified in Section 4.9 of Reference 2, Software Design Description (SDD) as specified in Section 4.10 of Reference 2, procedure to run the software and the validation test package.

Records – All SI records pertaining to this activity will be retained in the SI project records, per the SI QA Program. The records will be transmitted to PSEG upon request, or discarded after 2 years following the closure of this project, and upon notification to PSEG. This will be done in accordance with Section 6.1 of Reference 2.

Volume 5 -System Backup

Data is initially collected to a computers hard drive. This data is then copied onto a CDROM for backup and use on other computers. Only the data files need to be backed up as everything else can be recreated by reinstallation.

Volume 6 – System Manuals

Before the data can be acquired, the user must go through all of the set-up screens (Define General Parameters, Define Conversion Factors, Define Allowable Vibration Levels) review the set-up variables and reenter values that require to be changed. Some of the General Parameters that are checked are; sampling rate, number of channels, and bandpass filter frequency. A review of the transducer sensitivities and charge converter gains is part of the "Define Conversion Factors" review. The files that are generated for each test are stamped with a file name and extension.

Volume 7-Test Plan

A 15MHz function/arbitrary waveform generator will be used to test the software. The specific one used is an Agilent model 33120A. This device was calibrated on 03/30/2004 and the calibration sheet is included in Appendix A. The Agilent 33120A is shown in Figure 1.

The VDAS HC software will be tested using the following steps:

Step 1:

Verify that two distinct sets of transducer signals can be accommodated. This includes the verification that configuration files are read in for acquisition parameters, transducer sensitivities, charge converter gains, and allowable vibration levels. Table 1 outlines the configuration files created for this verification. All the configuration files listed in Table 1 are included in Appendix A.

DW Config CF and allowable.txt

This file defines parameters for 64 locations. Each location is assigned a value of 100 for sensitivity, 1 for gain, 1 for allowable, and g for units. These values should be correctly displayed in the "HC Setcon.vi" window after selecting "Drywell" in the "HC Location.vi" window. In addition, the allowable level should be correctly displayed in the "HC Setallow.vi" window.

DW Config general.txt

This file defines parameters for 64 channels. This file gives a value of 1024 samples per second, 8 for number of modules, 1 for the low frequency cutoff, and 160 for the high frequency cutoff. These parameters apply to all channels. These values should be correctly displayed in the "HC Setgenrl.vi" window after selecting "Drywell" in the "HC Location.vi" window.

DW Config channels.txt

This file defines the input limits for each of the 8 modules (There are eight channels per module). This file gives a value of 0.5 and -0.5 for the high and low input limits for all modules. These values should be correctly displayed in the "HC Setgenrl.vi" window after selecting "Drywell" in the "HC Location.vi" window.

TB Config CF and allowable.txt

This file defines parameters for 34 locations. Each location is assigned a value of 100 for sensitivity, 1 for gain, 1 for allowable, and g for units. These values should be correctly displayed in the "HC Setcon.vi" window after selecting "Turbine Building" in the "HC Location.vi" window. In addition, the allowable level should be correctly displayed in the "HC Setallow.vi" window.

TB Config general.txt
This file defines parameters for 34 channels. This file gives a value of 1024 samples persecond, 3 for number of modules, 1 for the low frequency cutoff, and 160 for the high frequency cutoff. These parameters apply to all channels. These values should be correctly displayed in the "HC Setgenrl.vi" window after selecting "Turbine Building" in the "HC Location.vi" window.

TB Config channels.txt
This file defines the input limits for each of the 3 modules (There are eight channels per module). This file gives a value of 0.5 and -0.5 for the high and low input limits for all modules. These values should be correctly displayed in the "HC Setgenrl.vi" window after selecting "Turbine Building" in the "HC Location.vi" window.

Step 2:
Verify that two distinct signals can be displayed in the "HC Test.vi" window. Also verify that these signals can be displayed in time history or frequency spectrum format in engineering units. In addition, verify that the maximum, minimum, and RMS values are displayed and correct. The RMS value is simply 0.707 times the amplitude for this test. The maximum and minimums correspond to positive and negative values of the input amplitude. For the strain gage channels, verify that the steady state condition in the Wheatstone Bridge can be adjusted to near 0 $\mu\varepsilon$ value and verify that the shunt calibration test yields a difference of 175$\mu\varepsilon \pm 10\%$ with and without shunt resistor attached.

Step 3:
The last verification involves actual data taken by the program. The results file should contain 64 channels of data for the Drywell and 34 channels of data for the turbine building. The duration of the data acquisition should be equivalent to that specified by the user in the "HC Test.vi" window. Also verify that the results file contains the ratio of the acquired vibration signal to the allowable. In addition to the results file, a setup documentation file should be produced that corresponds to the data taken.

Failure Analysis

Procedure ND.DE-TS.ZZ-5503(Q) requires a failure analysis to be performed on digital systems being installed. A component level failure analysis is not required, but a system level failure analysis is required. A typical failure analysis should contain:

- Identification of system level failures
- Potential causes of system failures
- Assessment of the significance of failures (likelihood/consequences)
- Identification of resolution

1) Identification of system level failures

For the purposes of this analysis, the system level failures can be categorized as a signal failure (e.g., accelerometers, remote charge converters, strain gages, cabling) or as a computer failure. Since similar systems to this one have been in service at Hope Creek and other facilities (i.e., this is somewhat of a mature system), it is assumed that system level failures are identifiable. That is, either a failure causes a complete loss of a signal or of the entire system, or it fails in such a way that a trained system operator can identify the difference between good signals and bad signals.

2) Potential causes

Signal failures can be caused by such things as individual component failure (as stated earlier, these need not be evaluated in detail), inadvertent cabling cuts, radiation effects, electro-magnetic interference, and grounding problems. Computer failures can be caused by hardware or software failures.

3) Failure significance

If a channel or the entire system fails, most components can be replaced, because the data acquisition systems are located in low radiation areas, in locations easy to access. The following is a discussion on selection of monitoring locations and component failure for the Drywell (Ctmt) and Turbine Building.

Drywell Accelerometers

The main steam and feedwater accelerometer locations and directions were determined by performing a modal analysis of each line and selecting locations that are accessible, minimized ALARA, and are expected to have a dynamic response. For redundancy, accelerometers were located such that at least two different locations are measuring the same direction. For example, on the feedwater system, the Z-direction vibration is monitored with 3 accelerometers at three different

locations. So if the signal from one of the Z-direction accelerometers is bad, the remaining two Z-direction accelerometers can be used to determine the response in the Z-direction. In the unlikely event that all the accelerometers for a particular direction fails (e.g., X-direction on main steam line B), the remaining accelerometers in the other two directions plus the vibration measurements from the other main steam lines, and the dynamic analysis results of the piping can be used to infer the structural adequacy of the piping system with failed accelerometers due to steady state vibration. The recirculation piping accelerometer locations were selected based on previous evaluations and vibration issues that have occurred on this system. Similar to the main steam and feedwater piping systems, there are at least two accelerometers for each direction. In addition, both recirculation loops are monitored at similar locations to aid in comparisons between the two loops. In the event that the sensors at one location fail, there is sufficient redundancy in the other locations and directions to still have the capability to assess the vibration of the piping systems.

Supplemental Record 22 of the DCP summarizes the drywell accelerometers by direction for the main steam, feedwater, and recirculation / rhr piping. A review shows that for each pipe line, each direction is monitored using a minimum of 2 accelerometers. Thus, there is sufficient redundancy in the direction and number of accelerometers to accommodate failures and still maintain the ability to assess the structural adequacy of the piping system due to steady state vibration.

Turbine Building Accelerometers

Similar to the drywell accelerometers, the locations and number of accelerometers in the turbine building were determined based on performing a modal analysis of the main steam, feedwater, and extraction steam piping system. The routing of the main steam, feedwater, and extraction steam piping inside the turbine building is simple (straight runs of pipe) as compared to the pipe routing inside the drywell that contains curved pipe and branch piping (SRV discharge lines). The accelerometer locations on the main steam, feedwater, and extraction steam piping are readily accessible and the cabling from the accelerometers to the VDAS does not require the electrical connections at the primary containment penetration that are needed for the drywell accelerometers. The cabling can be routed directly from the accelerometer/remote charge converter (RCC) to the VDAS all located inside the turbine building.

Supplemental Record 22 of the DCP summarizes the turbine building accelerometers by direction for each of the monitored piping systems. Due to the similar piping routing of the four main steam lines, only two of the four are monitored. Between the two monitored main steam lines, at least two accelerometers are used to monitor each direction. The feedwater line does not have the same amount of redundancy in the X and Z-directions; this is due to the low expected dynamic response of the piping system in these directions. The structural adequacy of the feedwater piping could still be determined if failures of either of these directions

occurred due to the remaining accelerometers and the piping analysis results. The configuration of the extraction steam system is not symmetric so additional locations were selected to be able to capture the dynamic response of the piping system. Due to the number of accelerometers on the extraction steam system, there is sufficient redundancy in directions such that failure of accelerometer signals would not compromise the ability to assess the response of the piping due to steady state vibration.

Strain Gages

Steam dryers failures have occurred at a couple of plants due to implementation of Extended Power Uprate (EPU) and the associated increase in steam flow. To help facilitate the determination of the loads on the steam dryer due to the acoustic wave (pressure pulsations) in the main steam lines, strain gages will be installed on each of the four main steam lines. The acoustic wave (pressure pulsation) is thought by the industry to be a major contributor to the steam dryer cracking that has occurred at EPU power levels in several plants.

Two strain gages will be installed in the hoop direction at eight locations on the main steam lines, two locations on each main steam line. In addition, two strain gages will be installed in the longitudinal direction at two locations to measure the amount of bending on the pipe. Two strain gages are used to increase the resolution of the signal, which is expected to be small (~1$\mu\varepsilon$). If one of the two strain gages were to fail, the remaining strain gage can still be used to measure the strain and determine the pressure pulsation in the main steam line. Strain gages will be installed at two locations on each main steam line to determine the attenuation of the pressure pulsation in the main steam line. If both strain gages were to fail at one location, the remaining strain gages on the other main steam lines can be used to determine the magnitude of the pressure pulsation in the main steam lines. **As a minimum, there should be at least one set of strain gages on one main steam line that do not fail to be able to assess the pressure pulsation.**

If the computer system fails, power increases could be restricted until the failure is repaired. The likelihood of a computer failure could be low to high, based on how long this system stays in operation in the plant. The likelihood of computer failure will increase if the system is used for several years.

The worst-case failures would be the failure of multiple vibration signals in a location that cannot be accessed at power, resulting in a restriction of increasing power. If it is determined that the accelerometers, remote charge converters or strain gages are the cause of the failure, and it is impossible to replace these components due to limited access, the impact of the loss of this data at the location will be reviewed on a case by case basis. There is sufficient redundancy to allow accelerometer failures and still be able to assess the structural adequacy of the piping systems due to steady state vibration. Similar to the accelerometer installation, there is sufficient

redundancy in the number and locations of strain gages to allow numerous failures and still retain the capability to determine the frequency and magnitude of the pressure pulsation in the main steam lines. Lastly, there is no individual sensor whose failure would prevent the ability to determine the acceptability of the vibration of the monitored piping systems. Multiple signal failures would be the worst-case failure for which it may be necessary to reduce power to replace failed components.

4) Resolution

For computer failures, the second data acquisition system (i.e., there is one data acquisition system for the reactor building and one for the turbine building) could be used as a backup until repair or replacement of the failed system. Hardware for this type of system should be readily available for some years to come. The software is controlled by the design process, so that the applications and configurations necessary can be re-installed on the repaired system. This type of failure should have little consequence.

Signal failures at locations that are accessible can be readily repaired if spare parts are available. Signal failures at inaccessible locations may be compensated by additional locations on the same piping, if available. Multiple signal failures in inaccessible locations will have to be evaluated by the Test Plan. There is a potential of unknown likelihood that multiple signal failures could stop pending power increases and require power to be reduced for component replacement or repair. This kind of power restriction and potential power reduction would impact power level increases associated with the Extended Power Uprate.

Digital EMI / RFI Concerns

The hardware, software, and data acquisition systems installed in accordance with this DCP are stand-alone systems. Information obtained from the DASs is not input into any permanent plant hardware or software system. However the impact of the DAS on surrounding plant systems due to potential Electromagnetic Interference is an issue requiring discussion.

One DAS system located in the Reactor Building is used for CTMT vibration monitoring, while another DAS located in the Turbine Building is used for Turbine Building monitoring. Each system is similar in configuration (similar hardware components) but customized for the number of monitored channels. Since the DASs do not supply information to any plant system, are not safety related, and walkdowns revealed they are not in "line of sight" of safety related systems, testing to the CE mark is considered sufficient. DCP personnel have contacted hardware vendors to obtain the CE certificates to satisfy Electromagnetic Compatibility issues required by the plant. Certificates were supplied for the SCXI-1000 4-slot chassis, SCXI-1001

12-slot chassis, SCXI-1141 8-channel elliptical filter module, SCXI-1305 8-channel BNC accelerometer input block, SCXI-1121 4-channel strain gage signal conditioning module, SCXI-1321 4-channel strain gage input block (all made by National Instruments) and 2793 ISOTRON accelerometer signal conditioner (made by Endevco). The CE certificates are stored as permanent plant documentation in the Critical Software Package (CSP)H-1-ZZ-SCS-0253 Volume 8.

Upon the review of the hardware Certs, two items require clarification;

The SCXI-1141 certificate listed ferrite bead connectors as a requirement between the SCXI-1141 filter module and the SCXI-1305 input block "when using mass termination terminal blocks. The configuration used for our DASs has the SCXI-1305 plugging directly into the SCXI -1141 via coaxial cable. Therefore, ferrite beads are not required.

The Certs for the DAS components required the use of double-shielded cables vs. single shielded cables between the DAS components. Discussions with the vendor stated that single shield cables were acceptable since they provide 93% shielding (compared to 97% for the double shielded cable), and the routings between DAS components was only 6ft and in the immediate area of the DAS.

Based upon the review of the hardware Certs, the information provided in the CSP, and plant walkdowns, the Digital Acquisition Systems used for vibration monitoring per this DCP will not impact existing plant systems due to Electromagnetic interference.

Potential Defective Equipment List

No new material added per this DCP is on the Defective Equipment List (NC.DE-TS.ZZ-5424(Q)).

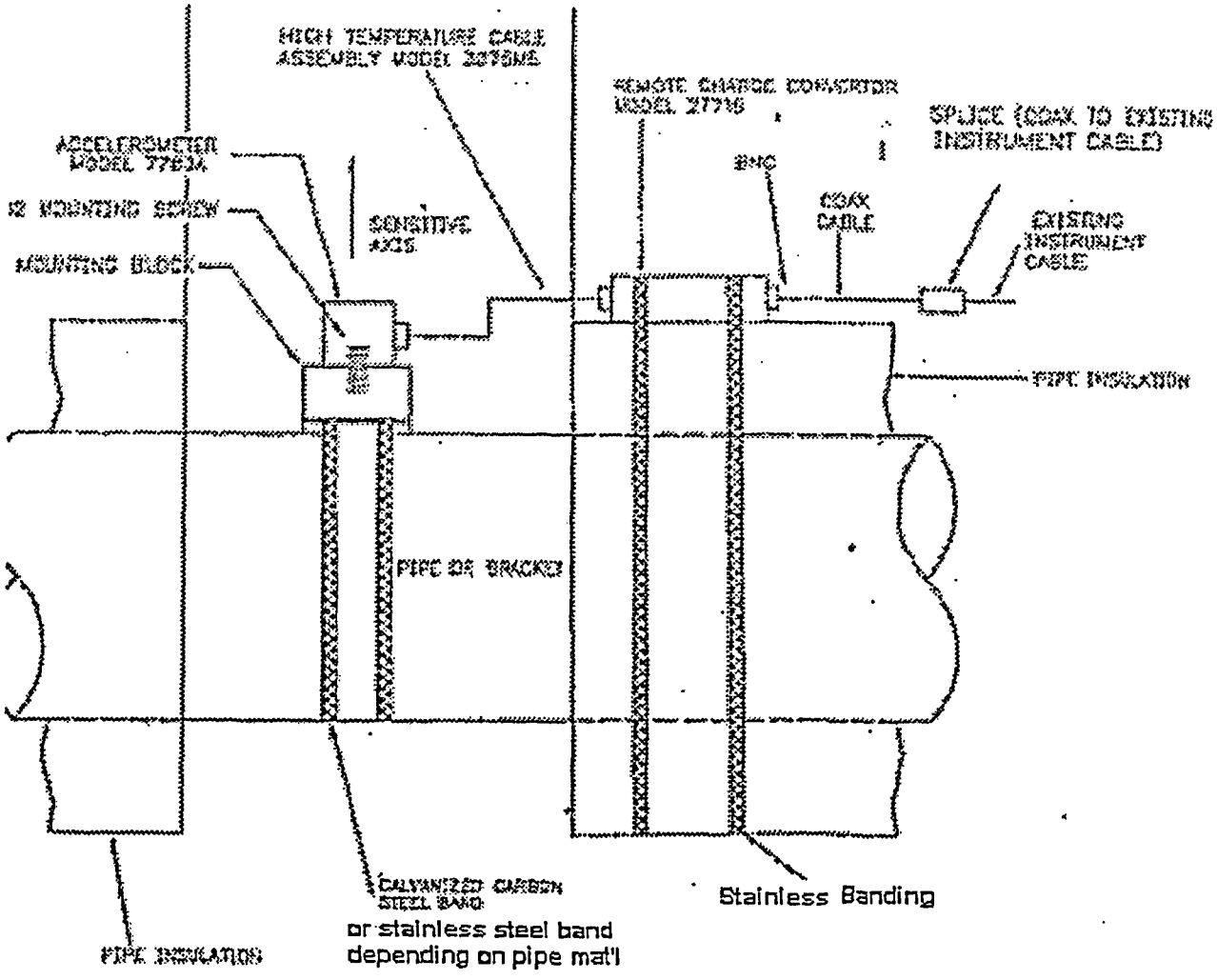

Fig. 1 – Typical Accelerometer Mounting Detail

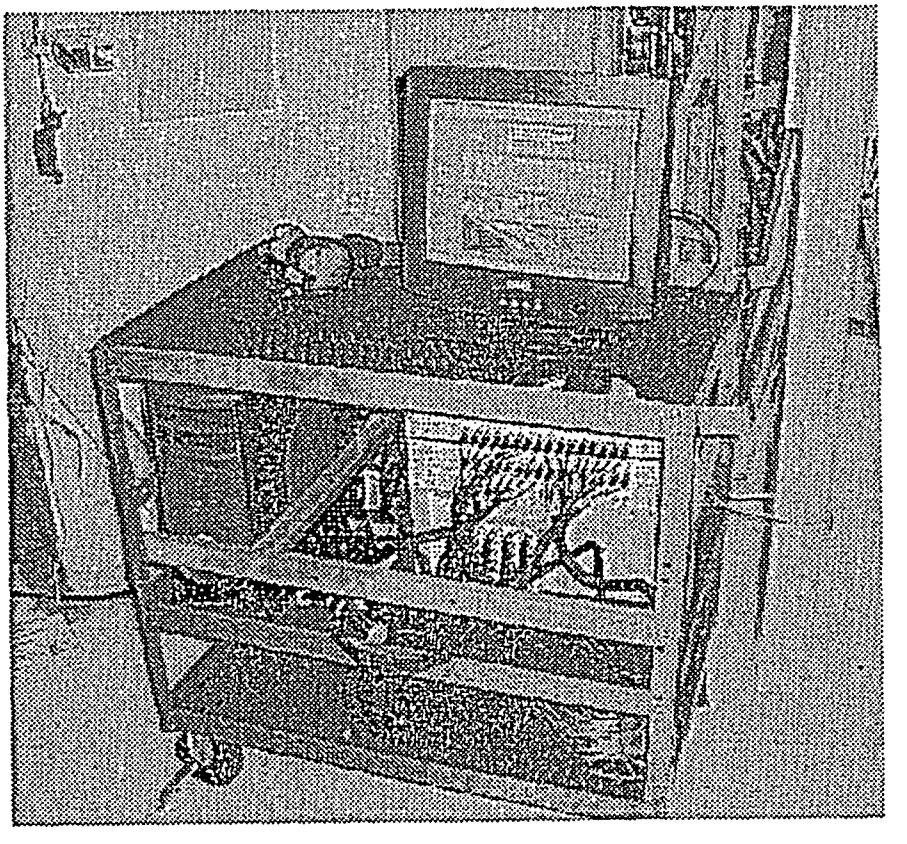

Fig. 2 – Typical DAS Configuration With Cart

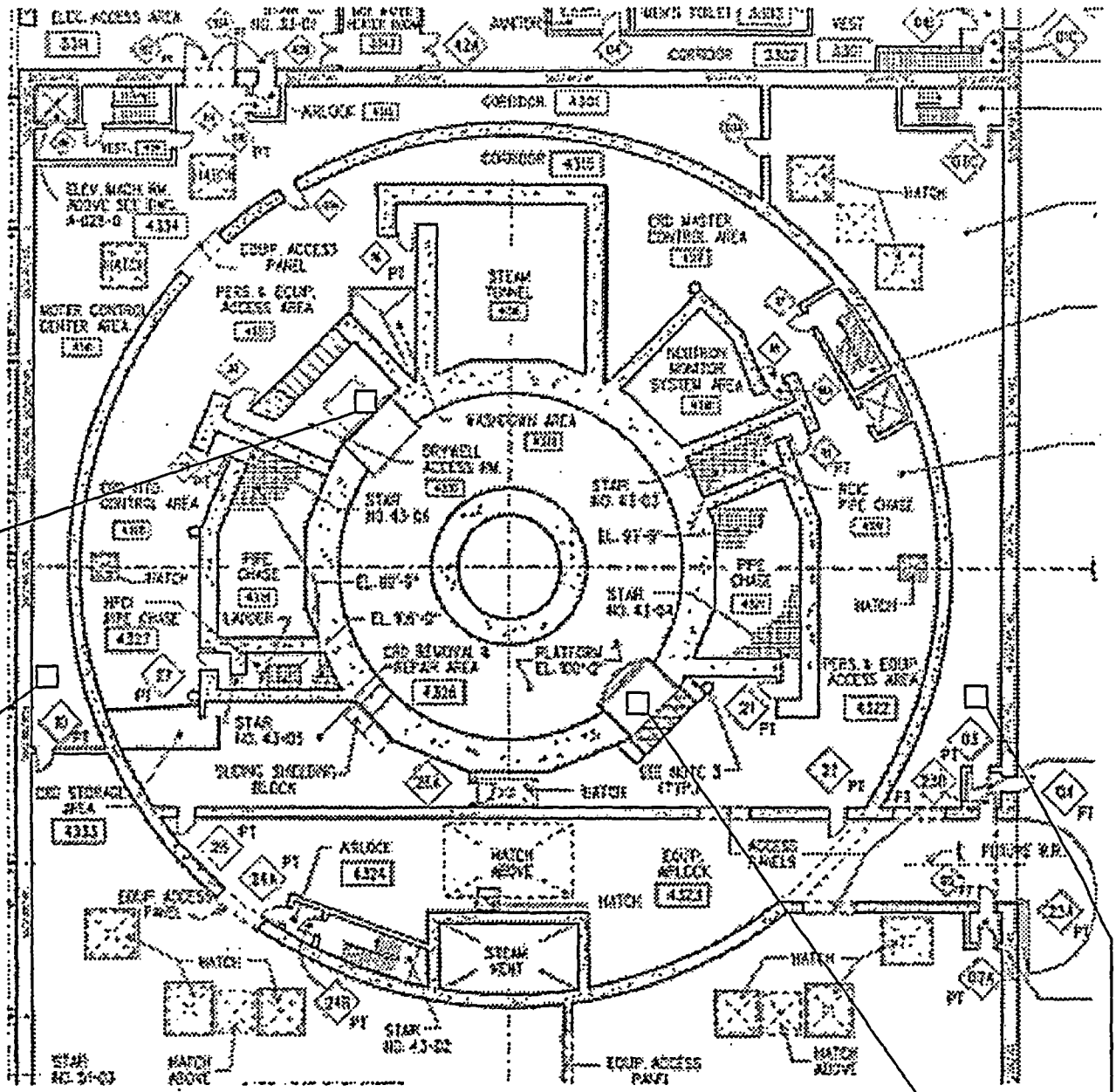

Electrical Penetration
(1BW202)

New DAS Location
(Recirc/RHR)

Reactor Building Elevation 102'
Monitoring Equipment Pictogram
Fig.3

New DAS Location
(MS & FW)

Electrical Penetration (1CW200)

(Markup of Dwg. A-0203)

Turbine Steam Tunnel (Room 1405 / 3491)

(22 Accelerometers Monitored At 9 Locations On Main Steam,Feedwater And Extraction Steam, 20 Strain Gages Monitored at 8 Locations On The Main Steam)

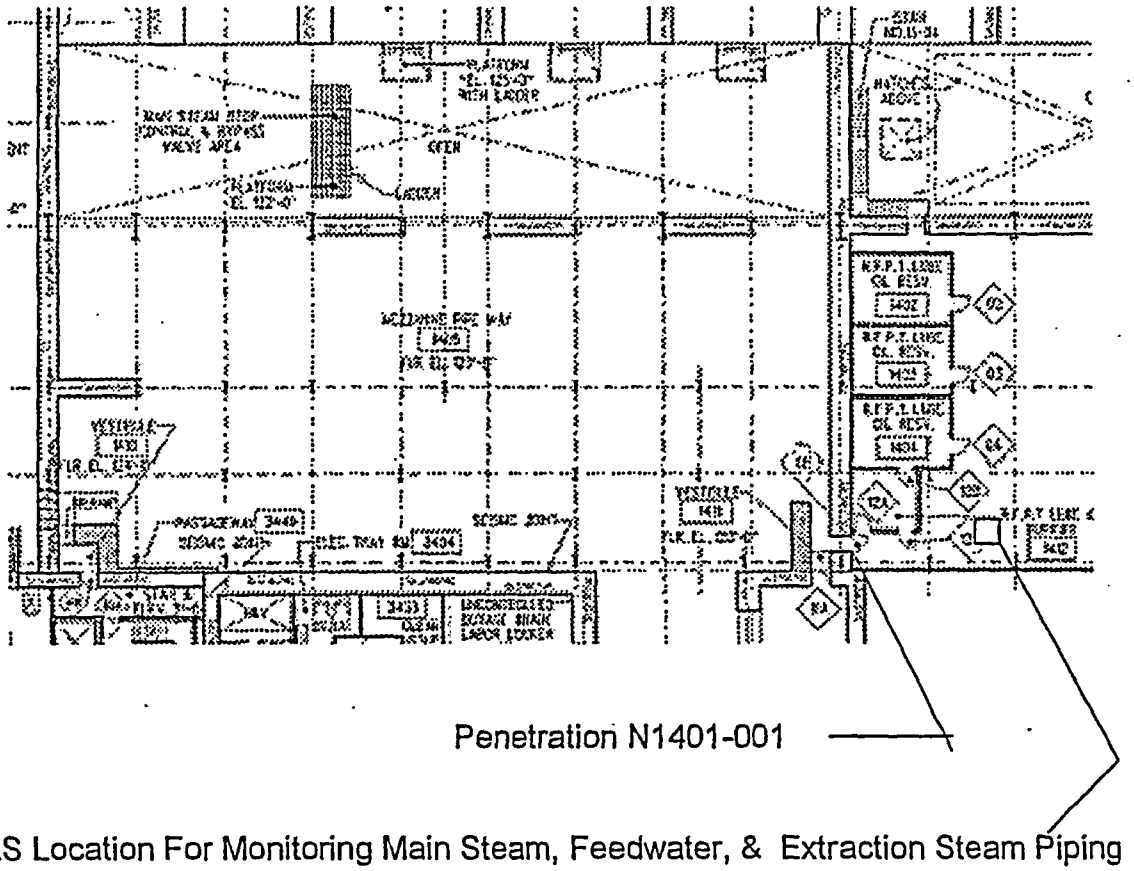

Turbine Building Elevation 120'-132'
Monitoring Equipment Pictogram

Fig. 4

(Markup of Dwg. A-0204)

Turbine Building Elevation 137'
Monitoring Equipment Pictogram

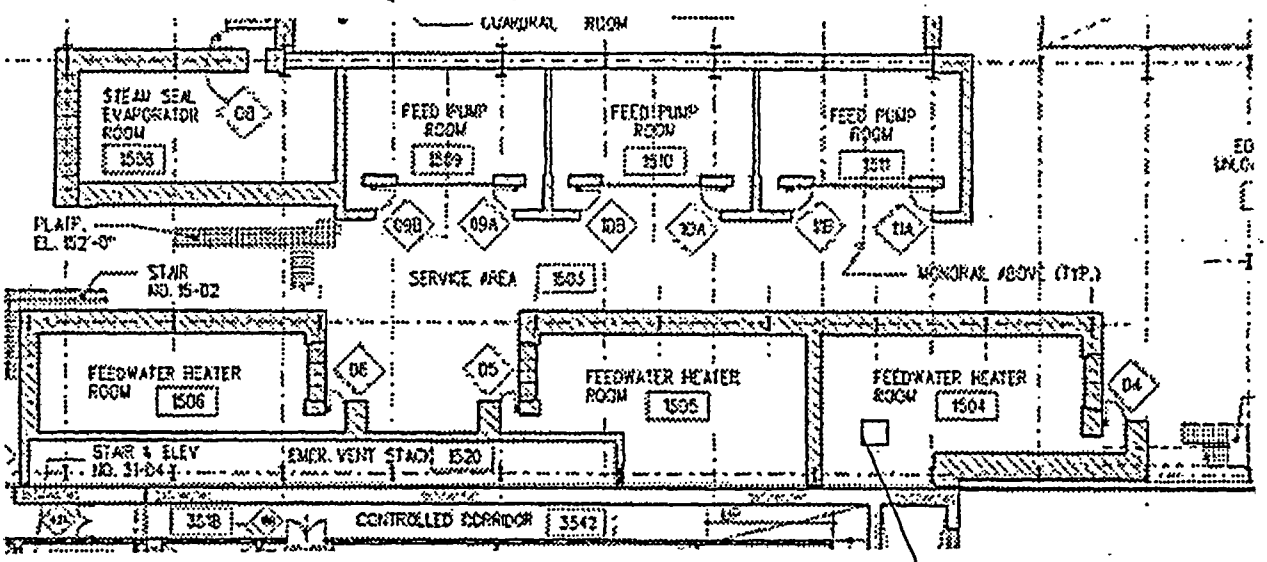

2 Accelerometers at 1 Location For Monitoring Feedwater Piping

Fig. 5

(Markup of Dwg. A-0205)

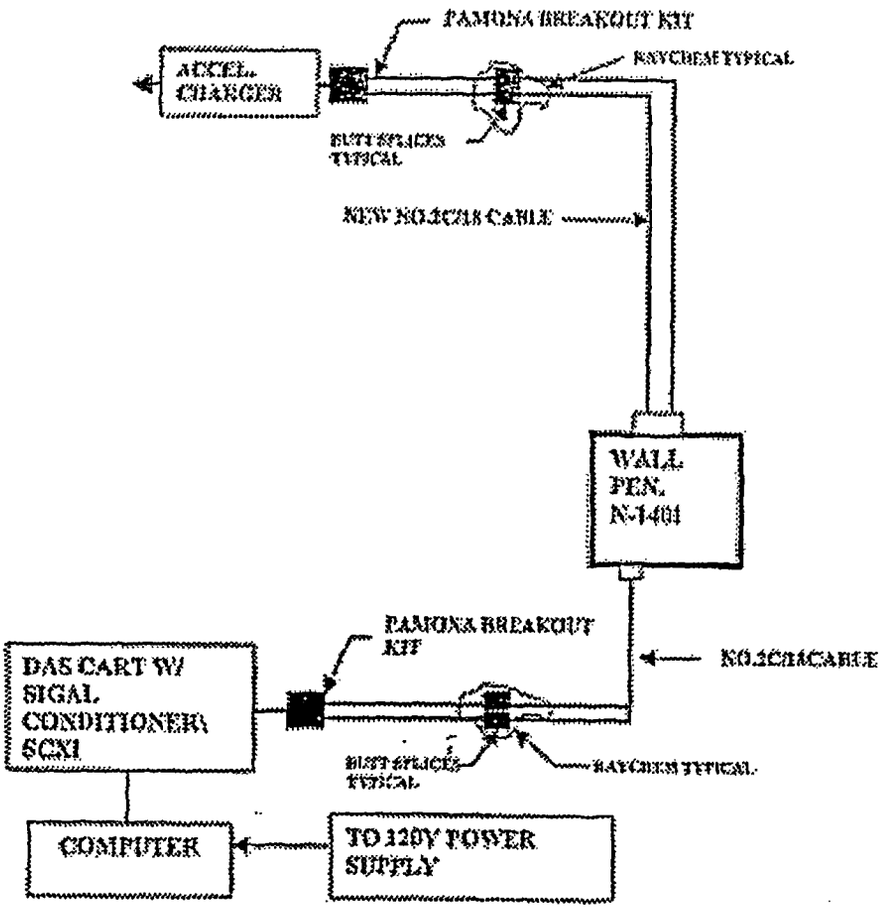

Fig. 6

Typical Wiring Configuration (Turbine Building)

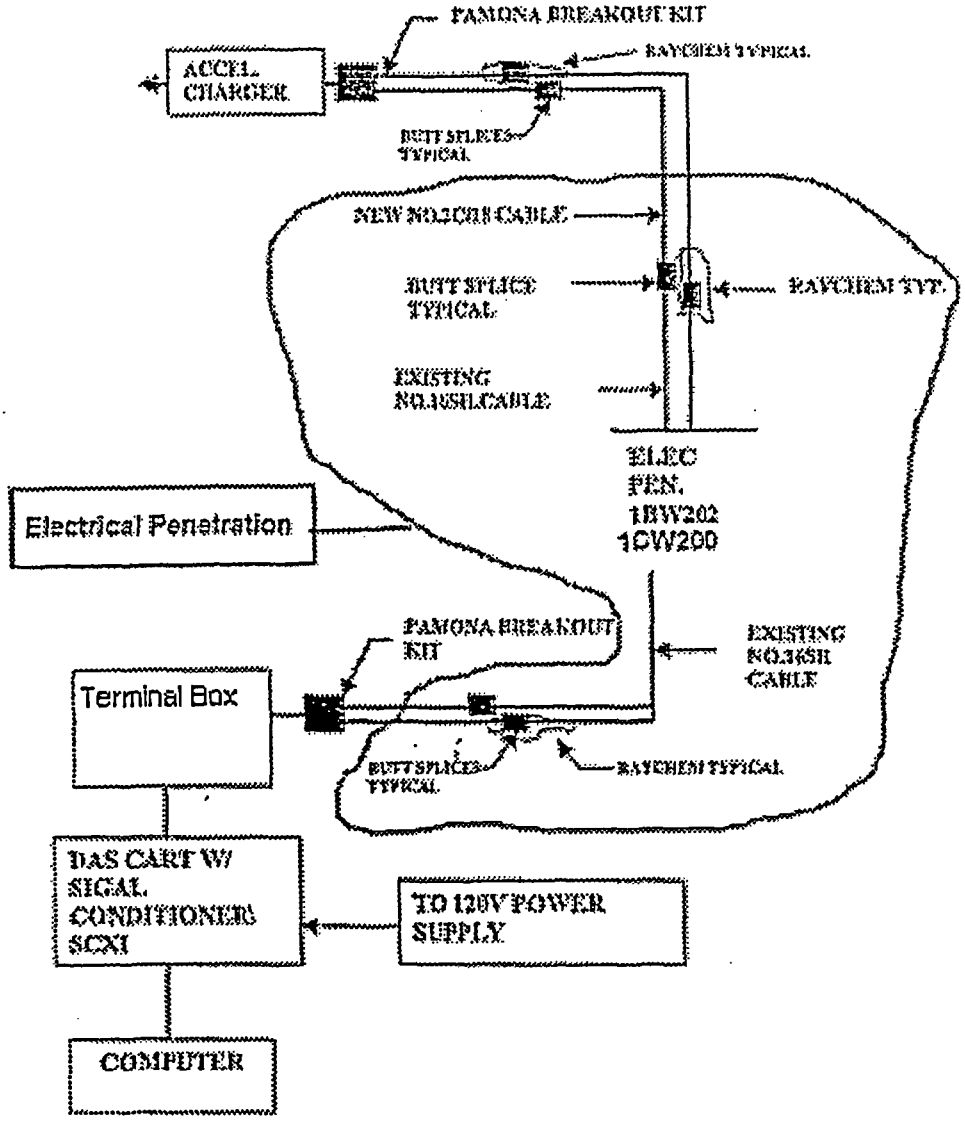

Fig. 7

Typical Wiring Configuration (Drywell / Reactor Building)

FORM 6

AFFECTED DOCUMENT LIST (ADL)

A	B	C		D	E
Package Rev of AD Additions/ Deletions	AD No. */**	Affected Document Number/Revision Requiring Update	♣	Document Sheet Number	SAP Order Operation Number
	H01	1-P-AE-01 / 21		1	270
	H02	1-P-AE-04 / 11		1	270
	H03	1-P-AB-01 / 18		1	270
	H04	1-P-AC-01 / 18		1	270
	H05	FSK-P-0169 / 12		1	270
	H06	FSK-P-0170 / 14		1	270
	H07	FSK-P-0214 / 14		1	270
	H08	Not Used			270
	H09	1-P-BC-02 / 21		1	270
	H10	1-P-FC-01 / 19		1	270
	H11	1-P-AB-08 / 12		1	270
	H12	1-P-AB-09 / 13		1	270
2	H13	1-P-BB-327 / 4		1	270
2	H14	1-P-BB-325 / 5		1	270
3	H15	1-P-BG-03 / 15 (AD Cancelled)		1	270
2	H16	1-P-BC-316 / 5		1	270
2	H17	1-P-BC-319 / 7		1	270

If the affected document is a CAT 1 document [NOTE: CAT 1 is <u>not</u> the same as "Use Category I", per NAP-1]:

* CAT 1 (Restart) document to be updated prior to Turn Over to Operations [see Definitions].

** CAT 1 (Post-Restart) document to be placed on hold until updated prior to next use [see Definitions].

♣ For Equivalent CPs ONLY

If the affected document is to be updated after installation is complete, place an "I" in the Affected Document Number column at the right. Normally, this column is left blank because Equivalent CP ADs are issued with all acceptable equivalencies included since SAP tracks current configuration at installation.

FORM 6

AFFECTED DOCUMENT LIST (ADL)

A	B	C		D	E
Package Rev of AD Additions/ Deletions	AD No. */**	Affected Document Number/Revision Requiring Update	♣	Document Sheet Number	SAP Order Operation Number
	S01	H-1-ZZ-SCS-0253 / 0		1	270
	S02	H-1-ZZ-SCS-0253 / 0		2	270
	S03	H-1-ZZ-SCS-0253 / 0		3	270
	S04	H-1-ZZ-SCS-0253 / 0		4	270
	S05	H-1-ZZ-SCS-0253 / 0		5	270
	S06	H-1-ZZ-SCS-0253 / 0		6	270
	S07	H-1-ZZ-SCS-0253 / 0		7	270
1	S08	H-1-ZZ-SCS-0253 / New		8	270
2	S09	A-0701-0 / 16		1	270
3	S10	6H4-2193 (New Calc)			270
3	M01	PP302(Q)-0368 / 10		0	270
3	M02	PP302(Q)-0318 / 7		0	270
3	M03	PJ700-0010 / 6		1	270
3	M04	PN1-E21-F006-0387 / 4		1	270

If the affected document is a CAT 1 document [NOTE: CAT 1 is <u>not</u> the same as "Use Category I", per NAP-1]:

* CAT 1 (Restart) document to be updated prior to Turn Over to Operations [see Definitions].

** CAT 1 (Post-Restart) document to be placed on hold until updated prior to next use [see Definitions].

<u>♣ For Equivalent CPs ONLY</u>

If the affected document is to be updated after installation is complete, place an "I" in the Affected Document Number column at the right. Normally, this column is left blank because Equivalent CP ADs are issued with all acceptable equivalencies included since SAP tracks current configuration at installation.

CHANGE NO: 80062466 REVISION NO.: 3

FORM 6

AFFECTED DOCUMENT LIST (ADL)

A	B	C		D	E
Package Rev of AD Additions/ Deletions	AD No. */**	Affected Document Number/Revision Requiring Update	♣	Document Sheet Number	SAP Order Operation Number
2	E01	E-1409-0 / 11		1032	270
2	E02	E-1924-1 / 11		1	270
3	E03	E-1583-1 / 28		1	270
3	E04	E-1593-1 / 25		1	270
3	E05	E-1563-1 / 32		1	270
3	E06	E-1543-1 / 31		1	270
3	E07	E-1513-1 / 30		1	270
3	I01	327412		1	270
3	I02	327413		1	270

If the affected document is a CAT 1 document [NOTE: CAT 1 is <u>not</u> the same as "Use Category I", per NAP-1]:

* CAT 1 (Restart) document to be updated prior to Turn Over to Operations [see Definitions].

** CAT 1 (Post-Restart) document to be placed on hold until updated prior to next use [see Definitions].

<u>♣ For Equivalent CPs ONLY</u>

If the affected document is to be updated after installation is complete, place an "I" in the Affected Document Number column at the right. Normally, this column is left blank because Equivalent CP ADs are issued with all acceptable equivalencies included since SAP tracks current configuration at installation.

CHANGE NO: 80062466 REVISION NO.: 3

FORM 7

MATERIALS LIST

CATEGORY: (EQUIPMENT, SERVICES, MATERIAL AND INSTALLATION SPARES) DISCIPLINE: CIVIL STRESS

ITEM NO.	QUANTITY	ITEM DESCRIPTION / SPECIFICATION (Add Material Master number as necessary)	PURCHASE CLASSIFICATION	MATERIAL USAGE COMMENTS
1	82	Endevco Model 7703A-100 Piezoelectric Accelerometer including Mounting Stud (2981-12/2981-3C/2981-1)	4	Material Master:1040157. Accelerometers: Prior to calibration, temperature soak the accelerometers for 48 hours at 550°F.
2	82	Endevco Model 2771B-1 Remote charge convertor w/o teflon sleeve, gain = 1.0,	4	Material Master: 1040204Remote charge Converters: Prior to calibration, temperature soak the remote charge converters for 48 hours at 180°F.
3	82	Endevco Model 3075M6-120 High Temperature Cable Assemblies (10 ft)	4	Material Master: 1040205
4	30	Accelerometer mounting block with bolting hardware	4	Do Not Order (Supplied by Structural Integrity),Use for each monitoring location
5	40000 Ft.	Cable-Cable USA Part #381802S8.1	1	MM=1040315
6	200	Connector-Breakout BNC Connector (Pomona #Model 4970)	4	MM=1040316, Use As Needed
7	2	PCB Company Model No. 394C06 Portable 1g Handheld Shaker	4	1043346
8		Not Used		
9	1	BAND-IT Tool – Strap Cutter-(Catalog No. C001)	4	1043316
10	1	BAND-IT Tension Limiter (Catalog No. C065) –Used With Part # C001	4	1043317
11		This Item Deleted From BOM		
12		This Item Deleted From BOM		

NOTE: This form is not required if material information is input directly into the Component Screen (tab) of the subordinate NUCM installation order.

CHANGE NO: 80062466 REVISION NO.: 3

FORM 7

MATERIALS LIST

CATEGORY: Electrical / I & C (EQUIPMENT, SERVICES, MATERIAL AND INSTALLATION SPARES) DISCIPLINE: Civil / Stress

ITEM NO.	QUANTITY	ITEM DESCRIPTION / SPECIFICATION (Add Material Master number as necessary)	PURCHASE CLASSIFICATION	MATERIAL USAGE COMMENTS
13	1	3" Conduit Cut To Suit 10' Length	4	Y555698
14	3	3" Conduit Bushing 1B-300	4	Y584682,
15	2	Foam Kit For Pen Seal 20 oz.	3	Y278002,
16	500 pieces	Raychem Tubing-WCSF-500-38/13-12N OD .53-1.35	1	Y874458
17	500 pieces	Raychem Tubing WCSF-115-9-12N-N OD. .11-.31	1	Y321277,
18	500 pieces	Raychem Tubing WCSF-300-12-N OD. .31-.81	1	Y874482,
19	500 pieces	Butt – Splice T&B 2B14 Range 16-14	2	Y585676,
20	7500 ft.	STRAP – 0.5 X 0.02 STAINLESS STEEL	4	Y971477 Use with mounting blocks on SS pipe & SS jacketing
21	1100 buckles	BUCKLE-BAND IT SS 1/2	4	Y412534 Use with SS pipe straps
22	1 lb.	WIRE-SFTY LIK SS .020	4	Y979962 Use to link each accel and mounting block
23	1500 ft.	STRAP – 0.5 X 0.02 CARBON STEEL	4	1042026,Use with mounting blocks on carbon steel pipe
24	250 buckles	BUCKLE-BAND IT CS 1/2	4	1042027,Use with carbon steel pipe straps

NOTE: This form is <u>not required</u> if material information is input directly into the Component Screen (tab) of the subordinate NUCM installation order.

CHANGE NO: 80062466 REVISION NO.: 3

FORM 7
MATERIALS LIST

CATEGORY: Electrical / I & C (EQUIPMENT, SERVICES, MATERIAL AND INSTALLATION SPARES) DISCIPLINE: Civil / Stress

ITEM NO.	QUANTITY	ITEM DESCRIPTION / SPECIFICATION (Add Material Master number as necessary)	PURCHASE CLASSIFICATION	MATERIAL USAGE COMMENTS
25	500 pieces	Tie-Cable, TYZ27M 3/16" To 3 ½" Dia., 13-3/8" Length (Tefzel Straps)	4	Y587041, For Use In Reactor & Turbine Bldg.
26	500 pieces	Tie-Cable, TYZ28M 1/8" To 4" Dia., 14 5/8" Length (Tefzel Straps)	4	Y587042, For Use In Reactor & Turbine Bldg.
27	500 pieces	Tie-Cable, TYS-14 4" Dia., 14-3/4" Length (Stainless Steel Straps)	4	Y587032, For Use In Drywell,
		Insulation – To Be Determined		
28	2	Structural Integrity Associates, Inc. Vibration Data Acquisition System (VDAS) – See Attachment 1 for details	4	Do Not Order – Supplied by Structural Integrity Associates Drywell Monitoring: Includes desktop computer, 4 signal conditioners, filter/amplifier – 54 channels Turbine Building: Includes desktop computer, 2 signal conditioners, filter/amplifier – 24 channels Signal Conditioner(s) -Endevco Model 2793 ISOTRON Filter / Amplifier Desktop Computer

NOTE: This form is not required if material information is input directly into the Component Screen (tab) of the subordinate NUCM installation order.

CHANGE NO: 80062466 REVISION NO.: 3

FORM 7

MATERIALS LIST

CATEGORY: (EQUIPMENT, SERVICES, MATERIAL AND INSTALLATION SPARES) DISCIPLINE: CIVIL STRESS

ITEM NO.	QUANTITY	ITEM DESCRIPTION / SPECIFICATION (Add Material Master number as necessary)	PURCHASE CLASSIFICATION	MATERIAL USAGE COMMENTS
29	40'	N-1000 UNISTRUT	1	Y876559
30	10'	P-1001-C UNISTRUT	4	Y373725
31	10'	N-3300 UNISTRUT	1	Y873451
32	10'	N-3301 UNISTRUT	1	Y876506
33	12	Screw- Hex Head Cap ½ x 13 x 15/16	1	Y874325
34	4	UNISTRUT N-1026 HG. BRACKET	1	Y876514
35	10	UNISTRUT NUT P-4010	2	Y876562
36	12	HILTI 1/2X3 3/4"	1	Y876009
37	500 pieces	BUTT SPLICE T&B 2B-18-16 OVERLAP TYPE	2	Y586942
38	50	CHANNEL CLAMP T&B TC5363X	4	MM=1042303
39	1 BAG	Grout	4	X370007

NOTE: This form is not required if material information is input directly into the Component Screen (tab) of the subordinate NUCM installation order.

CHANGE NO: 80062466 REVISION NO.: 3

FORM 7

MATERIALS LIST

CATEGORY: (EQUIPMENT, SERVICES, MATERIAL AND INSTALLATION SPARES) DISCIPLINE: CIVIL STRESS

ITEM NO.	QUANTITY	ITEM DESCRIPTION / SPECIFICATION (Add Material Master number as necessary)	PURCHASE CLASSIFICATION	MATERIAL USAGE COMMENTS
40	500 pieces	Butt-Splice T&B2A-18	1	Y593046
41		Not Used		
42	1	TK15 Keyphasor Conditioner and Power Supply	4	MM 1046438, Use to power 3300 XL probes
43	28	Weldable Strain Gage W/ 2-wire shielded leads ,(Part # HBWAK-12-063-6-10FG -F) Protective Cover & Practice Cover, Hitec Products, Inc.	4	1043382
44	4 Bottles	Loctite 242 (50ml Bottle)	4	Y221779
45	100	#10 Flat Stainless Steel Washer	4	Y583290
46	1500 Ft.	Band-It Band Strapping (Part# C303), Carbon Steel Strapping (3/8" x .025")	4	MM=1044183, Used To Mount Accel Mounting Block On Carbon Steel Pipe
47	500 Buckles	Band-It Buckle (Part# C353) (Use with Carbon steel Strapping 3/8" x .025")	4	MM=1044184, Use with Carbon Steel Strapping To Mount Accel Mounting Block To Carbon Steel Pipe
48		Not Used		

NOTE: This form is <u>not required</u> if material information is input directly into the Component Screen (tab) of the subordinate NUCM installation order.

CHANGE NO: 80062466 REVISION NO.: 3

FORM 7

MATERIALS LIST

CATEGORY: (EQUIPMENT, SERVICES, MATERIAL AND INSTALLATION SPARES) DISCIPLINE: CIVIL STRESS

ITEM NO.	QUANTITY	ITEM DESCRIPTION / SPECIFICATION (Add Material Master number as necessary)	PURCHASE CLASSIFICATION	MATERIAL USAGE COMMENTS
49	1	Vishay Model 700 Portable Strain Gage Welding & Soldering Unit	4	MM= 1044177, Used To Spot Weld Strain Gages To Pipe
50	1000 Ft.	Band-It Band Strapping (Part# C403), Stainless Steel Strapping (3/8" x .025")	4	MM=1044185, Used To Mount Accel Mounting Block On Stainless Steel Pipe
51	500 Buckles	Band-It Buckle (Part# C453) (Use with Stainless Steel Strapping 3/8" x .025")	4	MM=1044186, Use with Stainless Steel Strapping To Mount Accel Mounting Block To Stainless Steel Pipe
52	3	3300 8mm Proximity Sensor	4	Do not purchase. Use existing spares. MM 9012388
53	3	3300 XL 8mm Probe 4" Long	4	Do not purchase. Use existing spares. MM 9012445
54	3	3300 XL Probe Extension Cable	4	Do not purchase. Use existing spares. MM 9012387
55	100 Shts	Brady label Self-Laminating Polysester B-361, (1.5" Wide x 1.0" High), Brady Part# 62344 (Catalog # LAT-52-361-1)	4	MM= 1044527, 45 Labels Per Sheet, Write – On Area: 1.5" x 0 .375"
		See BOM in work orders 60049651 & 60046697		

NOTE: This form is not required if material information is input directly into the Component Screen (tab) of the subordinate NUCM installation order.

FORM-1
REGULATORY CHANGE PROCESS DETERMINATION

Document I.D.: 80062466 Revision: 3
Title: EPU Vibration Monitoring Installation Package

Activity Description:

This Design Change Package (DCP) has been produced as a result of The PSEG Extended Power Uprate Project, in conjunction with General Electric (GE), Task Report T-0318, ongoing EPU industry issues, and recurring plant vibration issues. Piping system monitoring will occur inside the drywell (room 4220), turbine building steam tunnel elevation 123' (room 1405/3491), and in feedwater water heater room 1504 at elevation 137'. The following piping systems will be monitored for vibration; Main Steam (drywell and turbine building), Feedwater (drywell and turbine Building), Extraction Steam, Recirc (RHR and their associated valves and attached piping inside drywell). The current scope monitors approximately 40 locations using about 100 accelerometers and 3 proximity probes in the drywell. Twenty-four accelerometers at ten locations, and twenty strain gages at eight locations will be monitored in the turbine building. The drywell instrumentation will be connected through drywell electrical penetrations 1BW202 and 1CW200 to data acquisition systems located in rooms 4303 and 4310. Cables are routed in conduits on the reactor building side of the installation through penetrations N-4330-002, S-4310-005 and N-4303-002, to the console mounted DAS systems. The DAS's will be powered via convenience outlets when data is to be obtained. Based upon constructability walkdowns, another DAS setup will sit atop a cart (in lieu of a hardware cabinet), in the turbine building room 4101, near the turbine building steam tunnel at elevation 123'. Cable inside the turbine building steam tunnel will be routed to this DAS through an existing grouted wall penetration (N-1401-001).

The hardware, software, and data acquisition systems installed in accordance with this DCP are stand-alone systems. Information obtained from the DASs is not input into any permanent plant hardware or software system. Therefore, there is no effect on the Main Steam, Feedwater, Extraction Steam, Recirc / RHR System Design Functions from the monitoring of these piping systems.

It is important to note that this DCP installs vibration monitoring equipment; instrumentation, cable, accelerometers, and digital acquisition systems to obtain vibration information on specific piping systems. This DCP does not include information pertaining to when the tests will be performed, nor does it provide testing acceptance criteria for the piping being monitored. This information will be provided in the Test Plan.

FORM-1
REGULATORY CHANGE PROCESS DETERMINATION

Document I.D.: 80062466 Revision: 3
Title: EPU Vibration Monitoring Installation Package

Note that more than one process may apply. If unsure of any answer, contact the cognizant department for guidance.

Activities Affected	No	Yes	Action
1. Does the proposed activity involve a change to the Technical Specifications or the Operating License?	☒	☐	If Yes, contact Licensing; process in accordance with NC.NA-AP.ZZ-0035(Q) LCR No.:
2. Does the proposed activity involve a change to the Quality Assurance Plan? Examples: • Changes to Chapter 17.2 of UFSAR	☒	☐	If Yes, contact Quality Assessment; process in accordance with ND.QN-AP.ZZ-0003(Q)
3. Does the proposed activity involve a change to the Security Plan? Examples: • Change program in NC.NA-AP.ZZ-0033(Q) • Change indoor/outdoor security lighting • Placement of component or structure (permanent or temporary) within 20 feet of perimeter fence • Obstruct field of view from any manned post • Interfere with security monitoring device capability • Change access to any protected or vital area • Modify safeguards systems or equipment	☒	☐	If Yes, contact Security Department; process in accordance with NC.NA-AP.ZZ-0033(Q)
4. Does the proposed activity involve a change to the Emergency Plan? Examples: • Change ODCM/accident source term • Change liquid or gaseous effluent release path • Affect radiation monitoring instrumentation or EOP/AOP setpoints used in classifying accident severity • Affect emergency response facilities or personnel, including control rm • Affect communications, computers, information systems or Met tower	☒	☐	If Yes, contact Emergency Preparedness
5. Does the proposed activity involve a change to the ISI Program Plan? Examples: • Affect Nuclear Class 1, 2, or 3 Piping, Vessels, or Supports (Guidance in NC.DE-AP.ZZ-0007(Q) Form-11)	☒	☐	If Yes, contact Reliability Programs ISI/IST; process in accordance with NC.NA-AP.ZZ-0027(Q)
6. Does the proposed activity involve a change to the IST Program Plan? Examples: • Affect the design or operating parameters of a Nuclear Class 1, 2, or 3 Pump or Valve (Guidance in NC.DE-AP.ZZ-0007(Q) Form-15)	☒	☐	If Yes, contact Reliability Programs ISI/IST; process in accordance with NC.NA-AP.ZZ-0070(Q)

FORM-1
REGULATORY CHANGE PROCESS DETERMINATION

Document I.D.: 80062466 Revision: 3
Title: EPU Vibration Monitoring Installation Package

Activities Affected	No	Yes	Action
7. Does the proposed activity involve a change to the Fire Protection Program? Examples: • Change program in NC.DE-PS.ZZ-0001(Q) • Change combustible loading of safety related space • Change or affect fire detection system • Change or affect fire suppression system/component • Change fire doors, dampers, penetration seal or barriers • See NC.DE-AP.ZZ-0007, Forms 3, 4 and 14 for details	☐	☒	If Yes, contact Design Engineering; process in accordance with NC.DE-PS.ZZ-0001(Q)
8. Does the proposed activity involve Maintenance which restores SSCs to their original design and configuration? Examples: • CM or PM activity • Implements an approved Design Change? • Troubleshooting (which does not require 50.59 screen per SH.MD-AP.ZZ-0002)	☒	☐	If Yes, process in accordance with NC.WM-AP.ZZ-0001(Q)
9. Is the proposed activity a temporary change (T-Mod) which *meets all the following conditions*? • Directly supports maintenance and is NOT a compensatory measure to ensure SSC operability. • Will be in effect at power operation less than 90 days. • Plant will be restored to design configuration upon completion. • SSCs will NOT be operated in a manner that could impact the function or operability of a safety related or Important-to-Safety system.	☒	☐	If Yes, contact Engineering; process in accordance with NC.DE-AP.ZZ-0030(Q)
10. Does the proposed activity consist of changes to maintenance procedures which do NOT affect SSC design, performance, operation or control? Note: Procedure information affecting SSC design, performance, operation or control, including Tech Spec required surveillance and inspection, ***require 50.59 screening***. Examples include acceptance criteria for valve stroke times or other SSC function, torque values, and types of materials (e.g., gaskets, elastomers, lubricants, etc.)	☒	☐	If Yes, process in accordance with NC.NA-AP.ZZ-0001(Q)
11. Does the proposed activity involve a *minor* UFSAR change (including documents incorporated by reference)? Examples: • Reformatting, simplification or clarifications that do not change the meaning or substance of information • Removes obsolete or redundant information or excessive detail • Corrects inconsistencies within the UFSAR • Minor correction of drawings (such as mislabeled ID)	☐	☒	If Yes, process in accordance with NC.NA-AP.ZZ-0035(Q)
12. Does the proposed activity involve a change to an Administrative Procedure (NAP, SAP or DAP) governing the conduct of station operations? Examples: • Organization changes/position titles • Work control/ modification processes	☒	☐	If Yes, process in accordance with NC.NA-AP.ZZ-0001(Q) and NC.DM-AP.ZZ-0001(Q)

FORM-1
REGULATORY CHANGE PROCESS DETERMINATION

Document I.D.: 80062466 Revision: 3
Title: EPU Vibration Monitoring Installation Package

Activities Affected	No	Yes	Action
13. Does the proposed activity involve a change to a regulatory commitment?	☒	☐	If Yes, contact Licensing and process in accordance with NC.NA-AP.ZZ-0030(Q)
14. Does the activity impact other programs controlled by regulations, operating license or Tech Spec? Examples: • Chemical Controls Program • NJ "Right-to-know" regulations • OSHA regulations • NJPDES Permit conditions • State and/or local building, electrical, plumbing, storm water management or "other" codes and standards • 10CFR20 occupational exposure	☒	☐	If Yes, process in accordance with applicable procedures such as: NC.NA-AP.ZZ-0038(Q) NC.LR-AP.ZZ-0037(Q)
15. Has the activity already received a 10CFR50.59 Screen or Evaluation under another process? Examples: • Calculation • Design Change Package or OWD change • Procedure for a Test or Experiment • DR/Nonconformance • Incorporation of previously approved UFSAR change	☒	☐	Take credit for 10CFR50.59 Screen or Evaluation already performed. ID: _____

If any other program or regulation *may be* affected by the proposed activity, contact the department indicated for further review in accordance with the governing procedure. If responsible department determines program is not affected, attach written explanation.

If ALL of the answers on the previous pages are "No," then check A below:

A. [ ] None of the activity is controlled by any of the processes above, therefore a 10CFR50.59 review IS required. Complete a 10CFR50.59 screen.

If one or more of the answers on the previous pages are "Yes," then check either B or C below as appropriate and explain the regulatory processes which govern the change:

B. [ ] All aspects of the activity are controlled by one or more of the processes above, therefore a 10CFR50.59 review IS NOT required.

C. [X] Only part of the activity is controlled by the processes above, therefore a 10CFR50.59 is required.

FORM-1
REGULATORY CHANGE PROCESS DETERMINATION

Document I.D.: 80062466 Revision: 3
Title: EPU Vibration Monitoring Installation Package

Explanation: This DCP increases in the amount of combustible commodities and the Fire Severity in Reactor building rooms 4303 and 4310. The weight of combustible commodities and the fire loads will be updated in Table 9A-1 " Fire Hazards Analysis Summary" (sheet 29), Table 9A-8 " Fire Hazards Analysis Tabulation Summary" (sheet 17), and Table 9A-9 "Fire Hazards Analysis Tabulation" (sheet 17) for the new fire loading in rooms 4303 and 4310. The Fire Protection Program is updated IAW NC.DE-PS.ZZ-0001(Q). The Fire Hazards Tables are revised per SAR Change Notice HCN 04-060.

	Printed Name	Signature	Date
Preparer:	Philip M. Stashak	Philip M. Stashak	12-15-04
Reviewer:	R. Zielinski	R Zielinski	12-15-04

FORM-2
10CFR50.59 SCREENING
Revision 2

Document I.D.: 80062466 Revision: 3
Title: EPU Vibration Monitoring Installation Package

Applicability:

____ Salem 1	____ Salem 3 (Gas Turbine)	____ PSEG Common
____ Salem 2	X Hope Creek	
____ Salem 1 & 2 Common	____ Hope Creek & Salem Common	

1. Brief Description of activity
Change to: ☒ Facility ☐ Procedures ☐ Methodology ☐ Test/Experiment ☐ Fission Barrier

What is being changed and why

This Design Change Package (DCP) has been produced as a result of The PSEG Extended Power Uprate Project, in conjunction with General Electric (GE), Task Report T-0318, ongoing EPU industry issues, and recurring plant vibration issues. Piping system monitoring will occur inside the drywell (room 4220), turbine building steam tunnel elevation 123' (room 1405/3491), and in feedwater water heater room 1504 at elevation 137'. The following piping systems will be monitored for vibration; Main Steam (drywell and turbine building), Feedwater (drywell and turbine Building), Extraction Steam, Recirc (RHR and their associated valves and attached piping inside drywell). The current scope monitors approximately 40 locations using about 100 accelerometers and 3 proximity probes in the drywell. Twenty-four accelerometers at ten locations, and twenty strain gages at eight locations will be monitored in the turbine building. The drywell instrumentation will be connected through drywell electrical penetrations 1BW202 and 1CW200 to data acquisition systems located in rooms 4303 and 4310. Cables are routed in conduits on the reactor building side of the installation through penetrations N-4330-002, S-4310-005 and N-4303-002, to the console mounted DAS systems. The DAS's will be powered via convenience outlets when data is to be obtained. Based upon constructability walkdowns, another DAS setup will sit atop a cart (in lieu of a hardware cabinet), in the turbine building room 4101, near the turbine building steam tunnel at elevation 123'. Cable inside the turbine building steam tunnel will be routed to this DAS through an existing grouted wall penetration (N-1401-001).

The hardware, software, and data acquisition systems installed in accordance with this DCP are stand-alone systems. Information obtained from the DASs is not input into any permanent plant hardware or software system. Therefore, there is no effect on the Main Steam, RCIC, Feedwater, Extraction Steam, Recirc or RHR System Design Functions from the monitoring of these piping systems.

FORM-2
10CFR50.59 SCREENING
Revision 2

Document I.D.: 80062466 Revision: 3
Title: EPU Vibration Monitoring Installation Package

Design Functions

The testing performed with the vibration monitoring equipment installed per this DCP ensures that plant safety is not dependent upon the performance of untested systems. The function of the vibration monitoring equipment and DAS is to confirm that the plant systems will continue to perform their Design Functions for conditions anticipated during normal operations and after implementation of the Extended Power Uprate.

Effect on Design Functions

The hardware, software, and DASs installed in accordance with this DCP are stand-alone systems. Information obtained from the DASs is not input into any permanent plant hardware or software system. Therefore, there is no effect on the Main Steam, RCIC, Feedwater, Extraction Steam, RHR / Recirc System Design Functions from the monitoring of these piping systems.

2. Summarize regulatory change determination (Other applicable regulatory processes identified on Form-1)

This DCP increases in the amount of combustible commodities and the Fire Severity in Reactor building rooms 4303 and 4310. The weight of combustible commodities and the fire loads will be updated in Table 9A-1 " Fire Hazards Analysis Summary" (sheet 29), Table 9A-8 " Fire Hazards Analysis Tabulation Summary" (sheet 17), and Table 9A-9 "Fire Hazards Analysis Tabulation" (sheet 17) for the new fire loading in rooms 4303 and 4310 and applicable Fire Areas. The Fire Protection Program is updated IAW NC.DE-PS.ZZ-0001(Q). The Fire Hazards Tables are revised per SAR Change Notice HCN 04-060

3. Does the proposed activity require a change to Technical Specifications or the Operating License? Yes ☐ No ☒

If YES, then a License Amendment is required prior to implementation of the activity.

LCR Number: N/A

4. Does the proposal require a UFSAR change? Yes ☒ No ☐

UFSAR Change Notice No. HCN 04-060

Describe UFSAR change: N/A

FORM-2
10CFR50.59 SCREENING
Revision 2

Document I.D.: 80062466 Revision: 3
Title: EPU Vibration Monitoring Installation Package

5. 50.59 Screening Questions

	Answer ALL screening questions	Yes	No
a.	Does the proposed activity involve a change to the facility that *adversely* affects a UFSAR described design function?	☐	☒
b.	Does the proposed activity involve a change to procedures that *adversely* affects how UFSAR described SSC design functions are performed or controlled?	☐	☒
c.	Does the proposed activity revise or replace evaluation methodology described in the UFSAR that either: • is used in the safety analyses or • establishes the design bases?	☐	☒
d.	Does the proposed activity involve a test or experiment NOT described in the UFSAR? (SSC is utilized or controlled in a manner that is outside the reference bounds of its design or inconsistent with analyses or descriptions in the UFSAR)	☐	☒
e.	Does the proposed activity *affect* a design basis limit for a fission product barrier (fuel cladding, reactor coolant system boundary or containment?	☐	☒

6. If a 50.59 Evaluation is not required, provide justification for that determination:

The hardware, software, and DASs installed in accordance with this DCP are stand-alone systems. Information obtained from the Data Acquisition Systems is not input into any permanent plant hardware or software system. Therefore, there is no effect on the Main Steam, , Feedwater, Extraction Steam, RHR / Recirc System Design Functions from the monitoring of these piping systems. However, the impact of the installation of the vibration monitoring equipment in various locations of the plant must be addressed. Based upon a detailed review of the UFSAR, the following items require discussion: ECCS Suppression Pool Strainer Blockage, Cable Routing and Separation, Containment Circuits and Short Circuit Analysis, Fire Protection (addition of combustibles), Penetration Seal Modification, Insulation Modification, Affect of mounting blocks and hardware on pipe stress evaluations, and Digital EMI/RFI concerns.

ECCS Suppression Pool Strainer Blockage

The ECCS is designed to provide protection against postulated loss-of-coolant accidents (LOCAs) caused by ruptures in reactor coolant pressure boundary (RCPB) piping. The ECCS injection network consists of a HPCI system, a Core Spray system, Automatic Depressurization (ADS) and the Low Pressure Coolant Injection (LPCI) mode of the RHR system. The installation of any commodities within the drywell creates concerns that

these commodities can be dislodged, transported to the suppression pool, and clog the suppression pool strainers. The clogging of the suppression pool strainers could hinder or disable the ability of the plant to respond to accidents requiring ECCS operation. Engineering Evaluation H-1BB-MEE-1168 revision 1 identifies insulation sources inside the drywell and determines the amount of insulation transported to the drywell due to applicable pipe breaks identified in UFSAR Section 3.6. Several High Energy Pipe Breaks were evaluated for insulation damage potential which included; Main Steam, Feedwater, Recirc Suction, Recirc/RHR Line, Recirc Suction riser. Three breaks were chosen for more detailed analysis; Recirc Suction, Feedwater, and Recirc Suction Riser. This DCP will install approximately 15000 ft. of cable in the drywell. Using a cable OD of ¼", and assuming that all of the cable is damaged and falls into the wetwell, a total volume of approximately 5 ft^3 is added to the wetwell. The results tabulated in table 8.3.10 reveal that locations and angles relative to the pipe breaks were used as parameters in determining impacted targets (pipe) and damaged insulation. Based upon these values we see that 78% of the insulation damaged below the grating at elevation 100' became wetwell debris, compared to 28% of the insulation damaged above elevation 100'. Most of the insulation damaged above elevation 100' was considered to be screened by the grating. Therefore it is extremely conservative to consider that all of the cable added to the drywell regardless of its location relative to the postulated pipe break locations is delivered to the wetwell. Even with this gross assumption, approximately 5 cubic feet of material becomes potential ECCS strainer blockage debris. This is less than 1.5% of the wetwell debris calculated for the Recirc Suction riser pipe break scenario. The calculated volume of wetwell debris attributed to the added cable is negligible. Therefore, the addition of cable to primary containment does not have the potential to adversely affect the design function of the ECCS System.

Cable Separation and Routing

The guidelines of Procedure HC.MD-AP.ZZ-0004(Q) "General Guidelines For Temporary Power And Communication Cables Installation And Removal" will be used as a guideline in order to install the temporary cable and ensure personnel and equipment safety. As a minimum, the cables will be labeled for identification near the remote charge converter, near the CTMT penetration (for drywell installation), and near the data acquisition systems. The Endevco Remote Charge Converter, BNC connector, and BNC Breakout will all be wrapped in shrink tubing. Normally the Endevco Remote Charge Converter is wrapped in a teflon sleeve. The BNC breakout has teflon as an insulator in the connector and PVC is used in the insulation material for the pigtail wires which are 7 inches in length. The shrink tube will encapsulate these materials to preclude the possibility of FME concerns. The small amounts of teflon and PVC are of little concern. In addition, these commodities are not a permanent installation to the

plant and will be removed in the future. Therefore, the addition of cable and monitoring equipment IAW this DCP does not adversely affect UFSAR Design Functions.

Containment Penetration Circuits and Short Circuit Analysis
In determining the impact of this DCP on the containment penetration two concerns are applicable; type of cable and circuitry (class 1E vs. non-class 1E) and penetration short circuit analysis. Containment penetrations 1BW202 and 1CW200 are I&C penetrations with Non-class 1E cables connected to it. None of the accelerometers and proximity probes cables are part of a Class 1E circuit. Therefore, we are in compliance with UFSAR section 8.1.14.5 which states that non-class 1E circuits are not routed in penetrations containing class 1E circuits. A review was performed to ensure the integrity of the containment electrical penetration 1BW202 and 1CW200. Calculation 7.13 was reviewed to determine the impact of connecting the wiring for the accelerometer and remote charge converters to Containment Electrical Penetrations 1BW202 and 1CW200. Calc 7.13 is titled "Penetration Assembly Protection". The piezoelectric accelerometer is a self-generating device that requires no external power source for operation. It is connected to the DAS system through a remote charge converter and uses a high impedance coaxial cable. These high impedance circuits carry milliamp signals, only. This type of circuit has been addressed in calc 7.13 Section h pages 6 and 7. The section states "...the continuous ratings for these penetrations are considerably higher than the maximum short circuit current they may be expected to experience." The milliamp circuits installed per this DCP cannot create a short circuit challenge to the penetration. Therefore, the penetration will continue to perform its UFSAR described Design Function.

Fire Protection (Addition Of Combustibles)
The overall HCGS fire protection program is based on the evaluation of potential fire hazards throughout the plant and on the effects of postulated fires on the performance of safe shutdown functions. Consistent with other safety requirements, systems, structures, and components, including those required for safe shutdown are designed and located to minimize the probability and effect of fires. The Auxiliary Building, Reactor Building, and Turbine building are separated from each other by 3-hour fire walls. Redundant safety related components are separated form each other and the rest of the plant by 3-hour fire barriers, and or separated by 20 feet. The following is a list of designated Fire areas per Fire Area drawings M-5114, and M-5115 for rooms where cable and monitoring equipment are added;; drywell room 4220 (RB7), reactor building rooms 4303 (RB2) and 4310 (RB1), turbine building rooms 1401(TB1), 1405/3491(TB1), and 1504(TB1).

Although we are adding cable to the drywell and safety related equipment is prevalent throughout the drywell, no fire hazards analysis is performed for the drywell per Table 9A-1 " Fire Hazards Analysis". The drywell is inerted during operation, making a fire impossible. The main concern for fire inside the drywell occurs during refueling and maintenance operations. During refueling and maintenance operations in the drywell, portable fire extinguishers, in addition to the hose stations, are adjacent to the work area and readily available for use by plant personnel. Self-contained breathing apparatus is provided near the containment entrances for firefighting personnel. Therefore, no further analysis of the drywell for implementation of this DCP is required.

Cables will be added to Turbine Building Rooms 1401, 1405/3491 and 1504. Another DAS sitting atop a cart will be stored in room 1401. Per Fire Area Drawings M-5115, these rooms are designated as Fire Area TB1. No safety related equipment exists in any of these rooms. These rooms are not listed in Table 9A-4 "Fire Areas and Associated Room Numbers" and Table 9A-1 "Fire Hazards Analysis Summary". Therefore, no Fire Hazards Analysis is required for installation of the cable and/or monitoring equipment in these rooms.

Vibration of Drywell piping and components will require the use of two digital acquisition systems (DAS) that will be installed in reactor building rooms 4303 and 4310. The DAS's located in rooms 4303 and 4310 (Reactor Building) consist of metal consoles, (non combustibles) and combustibles which include; desktop computers, data acquisition hardware components, and an assumed amount of paper, pencils, and nearby reference materials. A review of the Fire Hazards Analysis performed for DCP 4EC-3186 (installed vibration monitoring equipment and DAS to measure recirc vibration) shows that the weight assumptions for combustibles are applicable for this installation. Therefore, it is assumed that the equipment will add approximately 50 pounds of combustible plastic to the room. It is also assumed that paper, pencils, and reference materials will add an additional 25 pounds of combustible material to the room. This correlates to an additional heat load of 1.1 E6 Btus (Fire Load) added to rooms 4303 (Fire Area RB2) and (Fire Area RB1) 4310. The weight of combustible commodities and the fire loads will be updated in Table 9A-1 " Fire Hazards Analysis Summary" (sheet 29), Table 9A-8 " Fire Hazards Analysis Tabulation Summary" (sheet 17), and Table 9A-9 "Fire Hazards Analysis Tabulation" (sheet 17) for the new fire loading in rooms 4303 and 4310 and applicable Fire Areas. See SAR Change Notice HCN 04-060.

The increase in combustibles due to the values for paper, plastics and cable from the data acquisition system in room 4310 is 1.195E6 BTUs. For the overall affect on the Fire Area RB1 this value is compared to the combustible of 911.7E6 and a Fire Severity of 22 minutes listed in Table 9A-8 sheet 1. The increase in Fire Severity based upon a combustible load increase of 1.195E6 BTUs for Fire Area RB1 is .03 minutes. The localized affect of the increase in combustibles for room 4310 is an increase in the Fire Severity of .5 minutes. The new value is 43.5 minutes compared to the existing value of 43 minutes in Table 9A-8 sheet 17. The increases in combustible loads and the resultant affects on Fire Severity at both the local level (affect on room 4310) and on the overall Fire Area (RB1) are negligible. Installation of the data acquisition in room 4310 is acceptable.

The increase in combustibles due to the values for paper, plastics and cable from the data acquisition system in room 4303 is 1.195E6 BTUs. For the overall affect on the Fire Area RB2 this value is compared to the combustible of 829E6 and a Fire Severity of 23 minutes listed in Table 9A-9 sheet 1. The increase in Fire Severity based upon a combustible load increase of 1.195E6 BTUs for Fire Area RB2 is .03 minutes. The localized affect of the increase in combustibles for room 4303 is an increase in the Fire Severity of .5 minutes. The new value is 53 minutes compared to the existing value of 52.5 minutes in Table 9A-9 sheet 17. The increases in combustible loads and the resultant affects on Fire Severity at both the local level (affect on room 4303) and on the overall Fire Area (RB2) are negligible. Installation of the data acquisition in room 4303 is acceptable.

Therefore, per the Fire Protection review, the additions of combustibles IAW with this DCP does not adversely affect any UFSAR Design Functions.

Penetration Seal Modification

The cables for the accelerometers in the Turbine Building Steam Tunnel (room 1405) will be routed through penetration seal N-1401-001 to a DAS mounted on a cart in adjacent room 1401. Penetration Seal N-1401-001 is listed as a 3-hour fire seal. The grouted seal will be partially removed, conduit inserted, and cable routed through the conduit. The seal will be resealed and the conduit sealed with foam in accordance with Penetration Seal Work Release Nos. 5326 & 5327. The cables for the accelerometers in the Reactor Building from containment electrical penetration 1BW200 will be routed in conduit from the containment penetration to a DAS located in room 4303. Penetration 4303-002 will be partially removed and resealed IAW PSWR 5501.The cables for the accelerometers in the Reactor Building from containment electrical penetration 1CW200 will be routed in conduit from the containment penetration to a DAS located in room

4310. Penetrations N-4330-002 and S-4310-005 will be partially removed and resealed IAW PSWRs 5502 and 5503.

All affected penetration seals will be restored to their original design conditions. Therefore, no UFSAR Design Functions are adversely affected.

Insulation Modification, Affect Of Mounting Blocks And Hardware On Pipe Stress Evaluations.

The Main Steam, Feedwater, Extraction Steam piping, Recirculation (attached RHR ,and associated components) will be instrumented with approximately 130 accelerometers at approximately 50 locations. Insulation at the large bore monitored piping locations will be temporarily removed. Strapping, banded around the piping and prefabricated accelerometer mounting brackets will be installed at the large bore pipe monitoring locations. (Small-bore piping will be instrumented by using band clamps (hose clamps) in lieu of mounting blocks to secure the accelerometers to the piping.) The accelerometer(s) will be installed. Then, the insulation will be reinstalled. The insulation will be reconfigured for each size pipe OD., insulation thickness, and insulation jacket material. The insulation and jacket materials will be reconfigured with "high-hat" designs that will allow for the space occupied by the mounting blocks and accelerometers, and at the same time restore the insulation and jacketing to their original insulating performance. Therefore, the environmental room temperatures where the vibration monitoring hardware and devices are mounted on the piping are not affected.

In addition, strain gages with protective covers will be installed on all four Main Steam pipes in the Turbine Building. Two strain gages will be installed in the hoop direction at eight locations on the main steam lines, two locations on each main steam line. In addition, two strain gages will be installed in the longitudinal direction at two locations to measure the amount of bending on the pipe. The insulation at the specified locations will be temporarily removed, the strain gages spot-welded to the pipe, the protective cover slipped over the strain gage, and the insulation reinstalled.

The weight of the accelerometers, remote charge converters and mounting block for any monitored location is less than 3.5 lbs, total. The weight of the strain gages is a few ounces. This weight is insignificant to the lbs/ft of the pipe being monitored. The weights of the mounting hardware and monitoring devices will have no impact on the adjacent pipe supports. In addition, the weights of the mounting hardware and monitoring devices will have no impact on the dynamic effects of the piping they are monitoring. Therefore, the results obtained with the monitoring devices and hardware installed on the piping,

are still valid for the piping when the monitoring devices and hardware are later removed. The Design Functions of the piping and insulation are not adversely affected by additions of vibration monitoring equipment weight to the piping and modification of the insulation. The existing piping analysis is still valid and the room temperatures are unaffected by the modified insulation since the insulation is restored to its original insulating performance. The modification of the insulation and addition of accel mounting brackets does not affect the Design Functions of the systems be monitored.

Digital EMI / RFI Concerns The hardware, software, and data acquisition systems installed in accordance with this DCP are stand-alone systems. Information obtained from the DASs is not input into any permanent plant hardware or software system. However the impact of the DAS on surrounding plant systems due to potential Electromagnetic Interference is an issue requiring discussion.

One DAS system located in the Reactor Building is used for CTMT vibration monitoring, while another DAS located in the Turbine Building is used for Turbine Building monitoring. Each system is similar in configuration (similar hardware components) but customized for the number of monitored channels. Since the DASs do not supply information to any plant system ,are not safety related, and walkdowns revealed they are not in "line of sight" of safety related systems, testing to the CE mark is considered sufficient. DCP personnel have contacted hardware vendors to obtain the CE certificates to satisfy Electromagnetic Compatibility issues required by the plant. Certificates were supplied for the SCXI-1000 4-slot chassis, SCXI-1001 12-slot chassis, SCXI-1141 8-channel elliptical filter module, SCXI-1305 8-channel BNC accelerometer input block, SCXI-1121 4-channel strain gage signal conditioning module, SCXI-1321 4-channel strain gage input block (all made by National Instruments) and 2793 ISOTRON accelerometer signal conditioner (made by Endevco). The CE certificates are stored as permanent plant documentation in the Critical Software Package (CSP)H-1-ZZ-SCS-0253 Volume 8.

Upon the review of the hardware Certs, two items require clarification;

The SCXI-1141 certificate listed ferrite bead connectors as a requirement between the SCXI-1141 filter module and the SCXI-1305 input block "when using mass termination terminal blocks. The configuration used for our DASs has the SCXI-1305 plugging directly into the SCXI -1141 via coaxial cable. Therefore, ferrite beads are not required.

The Certs for the DAS components required the use of double-shielded cables vs. single shielded cables between the DAS components. Discussions with the vendor

stated that single shield cables were acceptable since they provide 93% shielding (compared to 97% for the double shielded cable), and the routings between DAS components was only 6ft and in the immediate area of the DAS.

Based upon the review of the hardware Certs, the information provided in the CSP, and plant walkdowns, the Digital Acquisition Systems used for vibration monitoring per this DCP will not impact existing plant systems due to Electromagnetic interference.

This implementation of this activity does not adversely affect UFSAR described Design Functions. It does not involve changes to procedures, or methodology, and does not involve tests or experiments. This activity does not involve changes to design limits for fission product barriers. Therefore, a 10CFR50.59 Evaluation is not required.

Conclusions:

☒ If all Screening questions in Section 5 are answered NO, then a 50.59 Evaluation is not required.

☐ If any Screening question is YES, then perform a 50.59 Evaluation (Form-3).

50.59 Evaluation No: N/A

7. List the documents reviewed containing relevant information, including section numbers (UFSAR, Tech Specs, and others):

3.6	Protection Against Dynamic Effects associated With The Postulated Rupture Of Piping
3.6.2.6	Determination Of Break Locations And Dynamic Effects Associated With The Postulated Rupture Of Recirculation System Piping (NSSS)
3.7	Seismic Design
3.7.2	Seismic System Analysis
3.7.3	Seismic Subsystem Analysis
3.9	Mechanical Systems And Components
3.9.2	Dynamic Testing And Analysis
3.9.2.1	Thermal Expansion, Piping Vibration, And Dynamic Effects In NSSS Piping
3.9.2.2	Preoperational And Startup Testing Of Non-NSSS Piping
3.11	Environmental Design Of Mechanical And Electrical Equipment
4.1.1	Reactor Vessel
4.1.2.3	Shroud Head And Steam Separator Assembly
4.1.2.4	Steam Dryer Assembly
4.3	Nuclear Design
4.3.2.1	Nuclear Design Description

4.4.5	Testing And Verification
5	Reactor Coolant System And Connected Systems
5.1.6	Reactor Pressure Vessel
5.1.7	Reactor Recirculation System
5.1.8	Main Steam Lines And Flow Restrictors
5.1.9	Reactor Core Isolation Cooling System
5.1.10	Residual Heat Removal System
5.1.11	Reactor Water Cleanup System
5.1.12	Feedwater System Lines
5.2	Integrity Of Reactor Coolant Pressure Boundary
5.2.1	Compliance With Codes And Code Cases
5.2.1.1	Compliance With 10 Cfr, Part 50, Section 50.55a
5.2.1.2	Applicable Code Cases
5.4.1	Reactor Recirculation Pumps
5.4.1.1	Safety Design Bases
5.4.6	Reactor Core Isolation Cooling System
5.4.6.1	Design Bases
5.4.6.2	System Design
5.4.6.4	Preoperational Testing
5.4.7	Residual Heat Removal System
5.4.7.1	Design Bases
5.4.7.2	System Design
5.4.7.4	Preoperational Testing
5.4.9	Main Steam Lines And Feedwater Lines
5.4.9.1	Safety Design Bases
5.4.13.4	Inspection And Testing
6.3	Emergency Core Cooling Systems
6.3.1	Design Bases And Summary Description
6.3.1.1	Design Bases
6.3.1.2	Summary Descriptions Of ECCS
6.3.2	System Design
6.3.3.7	ECCS Analyses For LOCA
6.3.3.8	LOCA Analysis Conclusions
6.3.4	Tests And Inspections
6.3.4.1	ECCS Performance Tests
7	Instrumentation And Controls
7.1.1.2	Protection Systems
7.1.1.3	Engineered Safety Feature Systems (Controls)
7.1.1.4	Systems Required For Safe Shutdown
7.2	Reactor Protection (Trip) System (Rps)
7.2.1	Description
7.2.1.3	Design Bases
7.3	Engineered Safety Feature Systems
7.3.1	Description

FORM-2
10CFR50.59 SCREENING
Revision 2

Document I.D.: 80062466 Revision: 3
Title: EPU Vibration Monitoring Installation Package

7.3.1.1	System Description
7.3.1.2	Design Bases
7.4	Systems Required For Safe Shutdown
7.4.1	Description
10	Steam And Power Conversion System
10.3	Main Steam Supply System
10.3.1	Design Bases
10.3.2	Description
10.4.7	Condensate And Feedwater
10.4.7.1	Design Bases
10.4.7.2	System Description
10.4.7.3	Safety Evaluation
14	Initial Test Program
14.2	Construction Verification, Preoperational, And Power Test Program
14.2.1	Summary Of Test Program And Objectives
14.2.1.1	Construction Verification Test Program - Phase I
14.2.1.2	Preoperational Test Program - Phase Ii
14.2.1.3	Power Test Program - Phase Iii
14.2.2	Organization
14.2.3.5	Preoperational Test Procedures
14.2.3.6	Startup Test Procedures
14.2.4	Conduct Of Test And Startup Program
14.2.7	Conformance Of Test Programs With Regulatory Guides
14.2.8	Use Of Reactor Operating And Testing Experience In The Development Of Test Program
14.2.12.3	Startup Test Procedures
15.0	General
15.1	Decrease In Reactor Coolant Temperature
15.1.1	Loss of Feedwater Heating
15.2.8	Feedwater Line Break
15.2.9	Failure of RHR Shutdown Cooling
15.3	Decrease In Reactor Coolant System Flow Rate
15.3.1	Reactor Recirculation Pump Trip
15.3.1.1	Identification of Causes and Frequency Classification
15.3.4	Reactor Recirculation Pump Shaft Break
15.3.4.1	Identification of Causes and Frequency Classification
15.6	Decrease In Reactor Coolant Inventory
15.6.1	Inadvertent Safety/Relief Valve Opening
15.6.2	Instrument Line Pipe Break
15.6.2.1	Identification of Causes and Frequency Classification
15.6.4	Steam System Piping Break Outside Containment
15.6.4.1	Identification of Causes and Frequency Classification
15.6.5	Loss-of-Coolant Accident Resulting from the Spectrum of Postulated Piping Breaks Within the Reactor Coolant Pressure Boundary Inside Primary

FORM-2
10CFR50.59 SCREENING
Revision 8 2

Document I.D.: 80062466 Revision: 3
Title: EPU Vibration Monitoring Installation Package

Containment

Applicable Tech Specs Reviewed;

3/4.3.3 ECCS System Actuation Instrumentation
3/4.3.4 Recirc Pump Trip Actuation Instrumentation
3/4.3.5 RCIC System Actuation Instrumentation
3/4.3.9 Feedwater / Main Turbine Trip Systems Actuation Instrumentation
3/4.4. Reactor Coolant System
3/4.4.7 Main Steam Line Isolation Valves
3/4.4.9 RHR
3/4.5 ECCS
3/4.6 Containment Systems
3/4.7.4 RCIC System
3/4.7.7 Main Turbine Bypass System
3/4.9.11 Residual Heat Removal And Coolant Circulation

COMPLETION AND APPROVAL

Philip M. Stashak	12-15-04	Philip M. Stashak	12-7-06
PREPARER (SIGN)	DATE	NAME (PRINT)	QUAL EXPIRES
R Zielinski	12-15-04	Ron Zielinskli	12-7-06
REVIEWER (SIGN)	DATE	NAME (PRINT)	QUAL EXPIRES
Dan McHugh	12/22/04	Dan McHugh	3-11-05
APPROVAL (SIGN)	DATE	NAME (PRINT)	QUAL EXPIRES

FORM-2
DESIGN INPUT RECORD COVERSHEET
SUP01 Rev.2 Sht. 1 of 7

Identification Number: 80062466 Revision Number: 1

Revision Summary:

This Design Change Package (DCP) has been produced as a result of The PSEG Extended Power Uprate Project, in conjunction with General Electric (GE), Task Report T-0318, ongoing EPU industry issues, and recurring plant vibration issues. Piping system monitoring will occur inside the drywell (room 4220), turbine building steam tunnel elevation 123' (room 1405/3491), and in feedwater water heater room 1504 at elevation 137'. The following piping systems will be monitored for vibration; Main Steam (drywell and turbine building), Feedwater (drywell and turbine Building), Extraction Steam, Recirc (and RHR inside drywell) and their associated valves and attached piping. The current scope monitors approximately 40 locations using about 100 accelerometers in the drywell. Twenty-four accelerometers at ten locations, and twenty strain gages at eight locations will be monitored in the turbine building. The drywell instrumentation will be connected through drywell electrical penetrations 1BW202 and 1CW200 to data acquisition systems located in rooms 4303 and 4310. Cables are routed in conduits on the reactor building side of the installation through penetrations N-4330-002, S-4310-005 and N-4303-0, to the console mounted DAS systems. The DAS's will be powered via convenience outlets when data is to be obtained. Based upon constructability walkdowns, another DAS setup will sit atop a cart, in the turbine building room 4101, near the turbine building steam tunnel at elevation 123'. Cable inside the turbine building steam tunnel will be routed to this DAS through an existing grouted wall penetration (N-1401-001). The hardware, software, and data acquisition systems installed in accordance with this DCP are stand-alone systems. Information obtained from the DASs is not input into any permanent plant hardware or software system. Therefore, there is no effect on the Main Steam, Feedwater, Extraction Steam, Recirc or RHR System Design Functions from the monitoring of these piping systems.

Responsible Engineer: Philip M. Stashak Date: 12-10-04

Reviewer/Checker: Ron. Zielinski Date: 12-15-04

FORM-1
(PAGE 3 OF 6)
DESIGN INPUT RECORD
DCP 80062466 Rev.1, SUP01 Rev.2 Sht. 2

Identification Number: 80062466 Revision Number: 1

Discipline/Specialty: Pipe Stress / Civil

Preparer Name: Philip M. Stashak Date: 12-10-04

Reviewer/Checker: Ron Zielinski Date: 12-15-04

I. DESIGN DOCUMENTS PRODUCED (OUTPUT)

If a Change Package is produced as a result of your design effort, list it below next to "Change No." If other documents are produced with the CP that are not on the Affected Document List (ADL) (example: a procurement specification) list them below. **Do not repeat ADL documents here.**

If a CP is not the design document produced, state "None" next to "Change No._____". Below that, list what design document was produced (example, a calculation produced in defense of a technical challenge).

LIST OF DESIGN DOCUMENTS PRODUCED (OUTPUT)

DOCUMENT ID NO./REVISION	TITLE
CHANGE NO.: 80062466 / 0	EPU Vibration Monitoring Installation Package

(If the completed design document is a CP, list it here)

FORM-1
(PAGE 3 OF 6)
DESIGN INPUT RECORD
DCP 80062466 Rev.1, SUP01 Rev.2 Sht. 3

II. DESIGN REFERENCES (INPUT)

Review the following design input categories and industry standards for help in selecting design references for the DIR:

DESIGN BASIS AND FUNCTION

- Design Basis inputs
- Performance/Testing requirements
- Material requirements
- Quality Assurance classification
- EQ classification
- Loading (electrical, thermodynamic, structural, etc.)
- Redundancy, diversity, separation
- System interface
- Failure effects
- Drawings

DESIGN STANDARDS

- INPO documents
- Technical Specification
- SAR
- PSEG commitments and applications to regulatory agencies
- HCGS UFSAR Table 3.2-1
- Design codes, Industry/PSE&G standards and guidelines {SEE BELOW}
- Regulatory requirements (bulletins, circulars, NUREG's etc.) {SEE BELOW}

Mechanical Design Classification

1. ASME B & PV Code Section III
2. ASME B & PV Code Section VIII
3. ASME B & PV Code Section XI
4. ANSI B31.1 Pressure Piping
5. ANSI B31.7 Nuclear Power Piping
6. Regulatory Guide 1.143 (Radwaste)

Consider Technical Standard ND.DE-TS.ZZ-3005(Q), Applicable Piping and Support Codes, for items 1 through 6 above.

FORM-1
(PAGE 4 OF 6)
DESIGN INPUT RECORD
DCP 80062466 Rev.1, SUP01 Rev.2 Sht. 4

II. DESIGN REFERENCES (INPUT) - CONTINUED

Civil Design Classification

1. AISC
2. ASME B & PV Code Section III
3. ASME B & PV Code Section VIII
4. Standard Building Code of N.J.
5. BOCA National Building Code
6. Uniform Building Code
7. NUREG 0612 Control of Heavy Loads at Nuclear Power Plants
8. ANSI/ASME N45.2.15
9. AWSA
10. AISI
11. AWWA
12. AASHTO
13. ACI
14. OSHA

Electrical/I&C Design Classification

1. ASME B & PV Code Section III
2. IEEE 279 Protection Systems
3. IEEE 323 Environmental Qualification of Class IE Equipment
4. IEEE 344 Seismic Qualification of Electrical Equipment
5. IEEE 379 Single Failure Criteria
6. IEEE 383 Cables & Splices
7. IEEE 384 Independence of Class 1E Equipment
8. IEEE 387 Emergency Diesel Generators
9. NUREG 0700 Human Factors
10. Reg. Guide 1.6 Independence between Redundant Power Sources
11. Reg. Guide 1.22 Testing of Protection System Functions
12. Reg. Guide 1.32 Criteria for Safety Related Power Systems
13. Reg. Guide 1.53 Single Failure Criteria
14. Reg. Guide 1.63 Electric Penetration Assemblies in Containment Structures for Nuclear Power Plants
15. Reg. Guide 1.75 Physical Independence of Electrical Systems
16. Reg. Guide 1.89 Environmental Qualification of Class 1E Equipment
17. Reg. Guide 1.97 Instrumentation to Assess Plant and Environs Conditions During an Following and Accident
18. Reg. Guide 1.100 Seismic Qualification of Electrical Equip.

OPERATIONAL CONSIDERATIONS

- Handling, storage, shipping
- Accessability, maintenance, ISI/IST
- Security
- Operability
- Human Factors (NUREG 0737 Clarif. of TMI Action plan Req'ts)
- Testability
- Current equipment/plant status
- Operating history

FORM-1
(PAGE 6 OF 6)
DESIGN INPUT RECORD
DCP 80062466 Rev.1, SUP01 Rev.2 Sht. 5

II. DESIGN REFERENCES (INPUT) – CONTINUED

CONTROLLED DOCUMENTS

All PSEG Nuclear controlled documents/drawings shall include Document ID No., Title and Revision. Codes, standards, regulations etc. shall include title, edition, section, paragraph, and addendum. Handbooks, publications etc. shall include title, author, publisher, edition, section and page. Purchased computer programs shall be referenced by title, version and publisher.

UNIQUE DOCUMENTS
Computer programs written by PSEG Nuclear especially for the design document shall be printed and included with the author's name and department. Correspondence such as PSEG Nuclear generated letters, Notes of Meetings, e-mail copies, telephone conversation transcripts (Telecon's) shall include Correspondence ID No. if available and Date.
The following references were used as design inputs to produce the Change Package or other design document(s) listed in Section II. Attach "unique" documents.

LIST OF DESIGN REFERENCES USED (INPUT)

Document ID NO./REV	TITLE/Impact on Design
DRF – 000-0006-0864 / 0 (Task T0318)	HCEPU Piping Flow Induced Vibration (GE) / Task Report
DRF 0000-0006-0455 /	NEDC-33076P (PUSAR) / Project Licensing
P-422 Rev. 4	Technical Specification For Steady State Vibration Testing Of Balance Of Plant ASME Section III, Nuclear Class 1,2, &3 and ANSI B31.1 Piping For the Hope Creek Generating Station
GE 22A5405 Rev.1	Piping Response, Measurement (Startup Test Specifications) / Startup Specification
GE 22A5405AW Rev. 1	Piping Response, Measurement (Startup Test Spec Data Sheet) / Startup Specification
H-1-BBXX-MFD-0254 (Dated 2/01/89)	Field Directive For Monitoring And Evaluating Selected SSV Level Of Reactor Recirc Piping And Selected Lines / Previous Recirc Testing
DCP 4EC-03186 Rev. 1	Installation Of Temporary Instrumentation To Monitor Vibration Levels Of The Reactor Recirculation System / Previous DCP
DCP 4EC-03187 Rev. 2	Install Reactor Recirc Tie-Back Supports / Previous DCP
DCP 80035953 Rev. 1	Remove Instrumentation Installed In DCP 4EC-3186 / Previous DCP
DCP 4HX-0269 Rev. 2	Recirc Piping Vibration Monitoring / Previous DCP
D7.5 / 19	HCGS Environmental Design Criteria

FORM-1
(PAGE 6 OF 6)
DESIGN INPUT RECORD
DCP 80062466 Rev.1 , SUP01 Rev.2 Sht. 6

LIST OF DESIGN REFERENCES USED (INPUT)
(CONTINUATION SHEET)

Document ID NO./REV	TITLE/Impact on Design
1-P-AB-01 Rev. 18	Turbine Bldg Main Steam Lead / Drawing
1-P-AB-02 Rev. 16	Turbine Bldg Main Steam Bypass / Drawing
1-P-AC-01 Rev. 18	Turbine Bldg Extraction Steam To FW Heater No. 6/ Drawing
1-P-AE-01 Rev. 21	Turbine Bldg Feedwater From Reactor Feed Pump To Drywell / Drawing
1-P-AE-02 Rev. 14	Turbine Bldg RFP Recirc To Condenser / Drawing
1-P-AE-04 Rev. 11	Feedwater Inside Drywell / Drawing
FSK-P-0169 Rev. 12	Recirculation Piping Loop -A / Drawing
FSK-P-0170 Rev. 14	Recirculation Piping Loop -B / Drawing
FSK-P-0214 Rev. 14	Main Steam Lines A, B Inside Drywell / Drawing
FSK-P-0215 Rev. 15	Main Steam Lines B, C Inside Drywell
1-P-BB-317 Rev. 6	Drywell Instrument Line Loop A Suction to Drywell Penetration / Drawing
1-P-BB-318 Rev. 4	Drywell Instrument Line Loop A Suction to Drywell Penetration / Drawing
1-P-BB-319 Rev. 4	Drywell Instrument Line Loop B Suction to Drywell Penetration / Drawing
1-P-BB-320 Rev. 6	Drywell Instrument Line Loop B Suction to Drywell Penetration / Drawing
1-P-BB-321 Rev. 5	Drywell Instrument Line Loop A Suction to Drywell Penetration / Drawing
1-P-BB-322 Rev. 6	Drywell Instrument Line Loop A Suction to Drywell Penetration / Drawing
1-P-BB-327 Rev. 4	Drywell Instrument Line Loop B Suction to Drywell Penetration / Drawing
1-P-BB-328 Rev. 6	Drywell Instrument Line Loop B Suction to Drywell Penetration / Drawing
NC.NA-AP.ZZ-0064 / 2	Software Quality Assurance / Procedure
HC.MD-AP.ZZ-0004 / 0	General Guidelines For Temporary Power And Communication Cables Installation And Removal

FORM-1
(PAGE 6 OF 6)
DESIGN INPUT RECORD
DCP 80062466 Rev.1 , SUP01 Rev.2 Sht. 7 of 7

E-1406	Hope Creek Separation Criteria
ND.DE-TS.ZZ-2001(Q) / 4	Telecommunication Cable Installation & Removal / Technical Standard
E-1408	Wire And Cable – Notes and Details
E-1000	Electrical Cable Description
TMOD 04-006 Rev.2	Vibration Monitoring Equipment Reactor Recirc Piping
VTD 326528 / 0	Recirculation Piping Vibration Monitoring Locations
VTD 326529 / 0	Inside The Drywell Feedwater Piping Vibration Monitoring Locations
VTD 326530 / 0	Outside The Drywell Feedwater Piping Vibration Monitoring Locations
VTD 326527 / 0	Extraction Steam Piping Vibration Monitoring Locations
VTD 326531 / 0	Outside The Drywell Main Steam Piping Vibration Monitoring Locations
VTD 326532 / 0	Main Steam Line A Piping Vibration Monitoring Locations
VTD 326533 / 0	Main Steam Line B Piping Vibration Monitoring Locations

Supplemental Record 12

Accelerometer Direction Pictograms

DCP 80062466 Rev.0
SUP 12 R 2
Sht. 1 of 45

Table of Contents

Page #	System	Data Point (DP)	Location(Bldg.)
3	Main Steam 'A'	81	Drywell
4	Main Steam 'A'	14	Drywell
5	Main Steam 'A' (RCIC)	430	Drywell
6	Main Steam 'A' (SRV-'J')	22J	Drywell
7	Main Steam 'B'	534	Drywell
8	Main Steam 'B'	490	Drywell
9	Main Steam 'B'	460	Drywell
10	Main Steam 'B' (SRV-'P')	40P	Drywell
11	Feedwater	160	Drywell
12	Feedwater	Z002	Drywell
13	Feedwater	280	Drywell
14	Feedwater	220	Drywell
15	Feedwater	50	Drywell
16	Recirc 'A'	323	Drywell
17	Recirc 'A'	14	Drywell
18	Recirc 'A' (RHR)	602	Drywell
19	Recirc 'B'	323	Drywell
20	Recirc 'B'	13	Drywell
21	Recirc 'B' (RHR) *	506F	Drywell
22	Main Steam 'A'	Z013	Turbine
23	Main Steam 'A'	Z018	Turbine
24	Main Steam 'B'	Z003	Turbine
25	Main Steam 'B'	Z008	Turbine
26	Feedwater	817	Turbine
27	Feedwater	731	Turbine
28	Extraction Steam	Z008	Turbine
29	Extraction Steam	49	Turbine
30	Extraction Steam	230	Turbine
31	Extraction Steam	Z010	Turbine
32	Recirc 'A'	110	Drywell
33	Recirc 'B'	110	Drywell
34	Recirc 'A' (RHR)	621	Drywell
35	Recirc 'B' (RHR)	614	Drywell
36	Recirc 'B' (RHR)	603F	Drywell
37	Recirc 'B' (RHR)	515N	Drywell
38	Recirc 'B' (RWCU)	930	Drywell
39	Recirc 'B' (RHR)	N/A	Drywell
40	Recirc 'B'	155/160	Drywell
41	Recirc 'A'	130	Drywell
42	Recirc 'A' (RHR)	97	Drywell
43	Recirc 'B' Pump Motor		Drywell
44	Recirc 'B' FO77		Drywell
45	Recirc 'A' & "B" (FO60 A,B)		Drywell

* DP. 515N Installed In Lieu of 506F

DCP 80062466R0
SUP12R2
Sht. 2

DCP 80062466 Rev.0
SUP 12 R' 2
Sht. 3

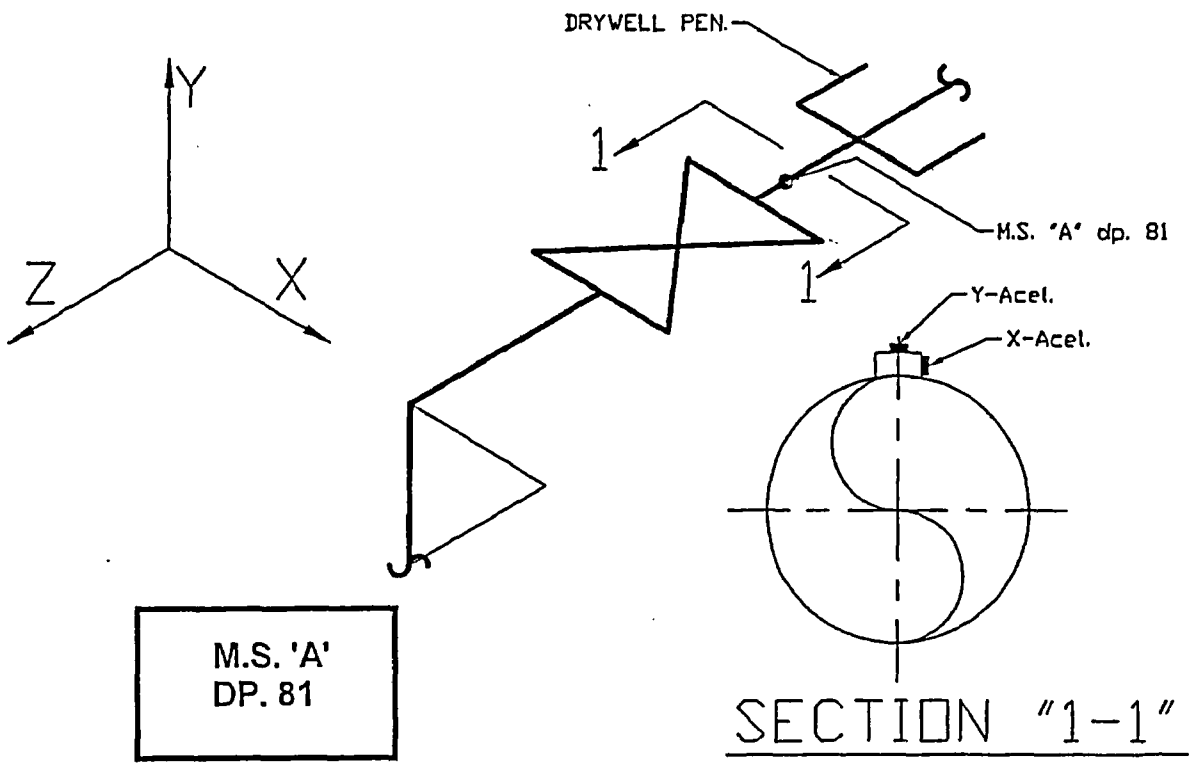

M.S. 'A'
DP. 81

DCP 80062466 Rev.0
SUP 12 R· 2
Sht. 4

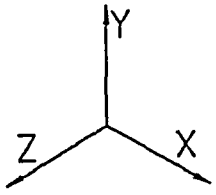

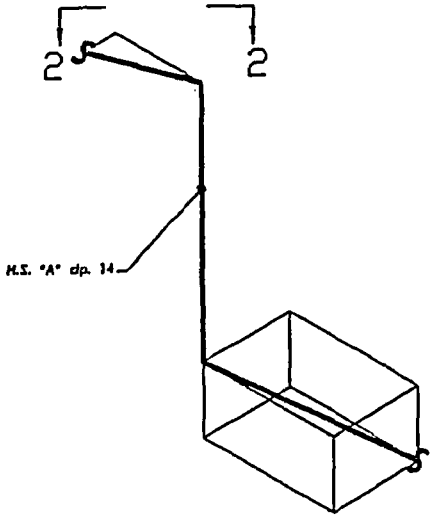

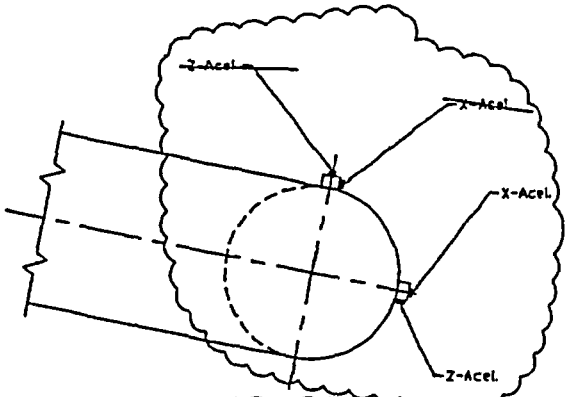

SECTION "2-2"

DCP 80062466 Rev.0
SUP 12 R2
Sht. 5

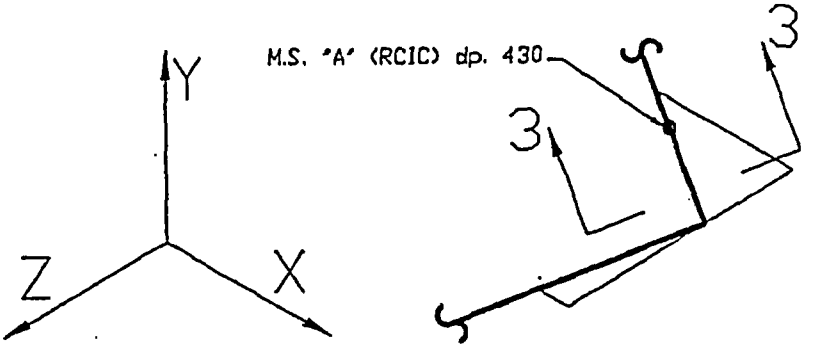

M.S. 'A' (RCIC)
DP. 430

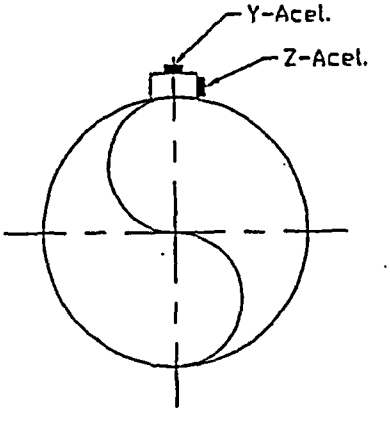

SECTION "3-3"

DCP 80062466 Rev.0
SUP 12 R 2
Sht. 6

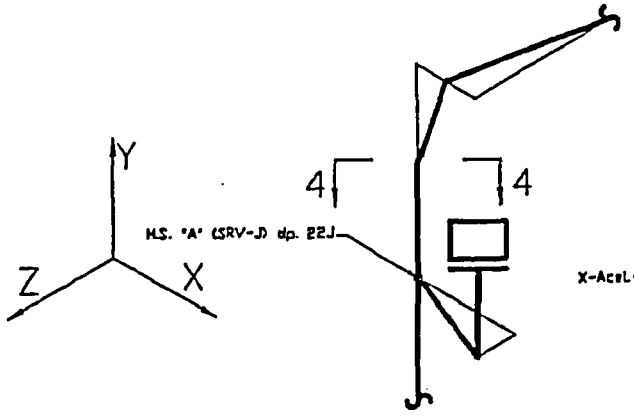

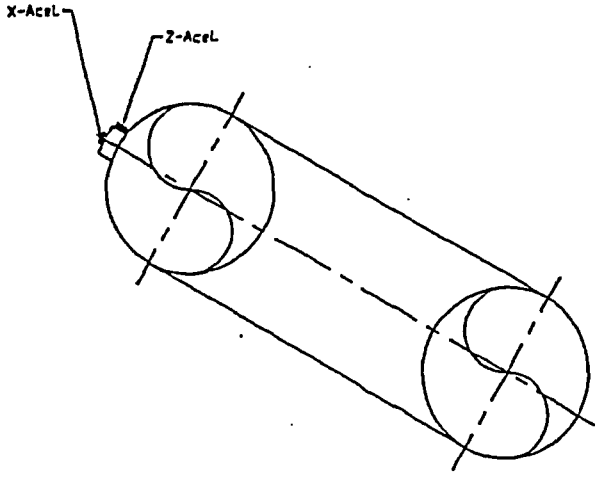

SECTION "4-4"

M.S. 'A' (SRV - 'J')
DP. 22J

DCP 80062466 Rev.0
SUP 12R 2
Sht. 7

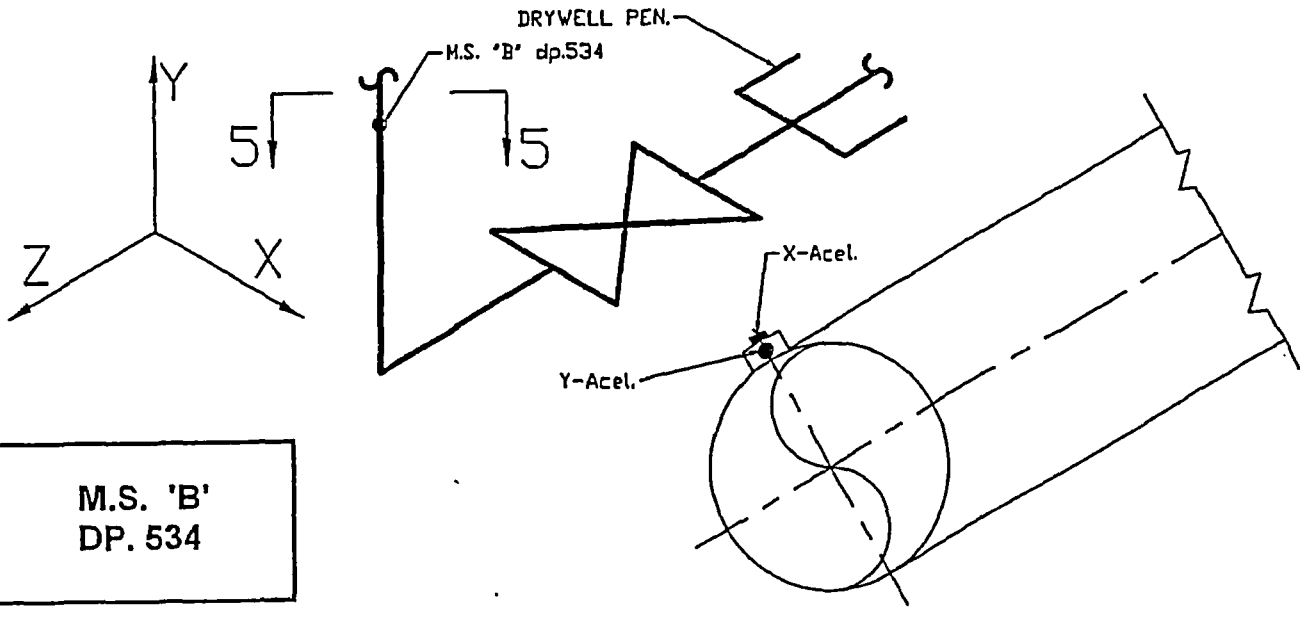

M.S. 'B'
DP. 534

SECTION "5-5"

DCP 80062466 Rev. 0
SUP 12R 2
Sht. 8

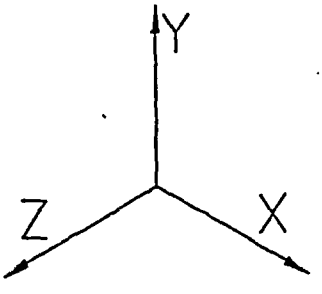

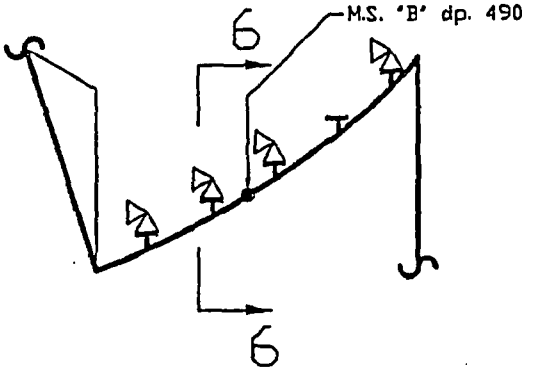

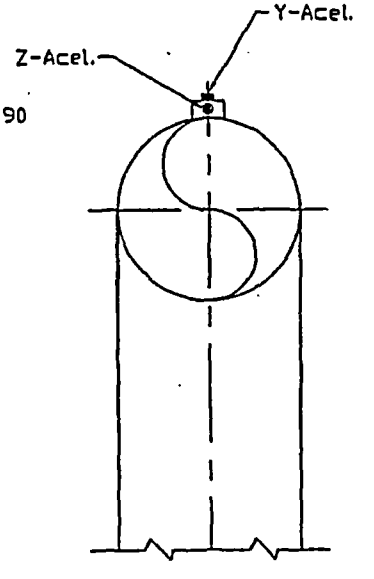

SECTION "6-6"

M.S. 'B'
DP. 490

DCP 80062466 Rev.0
SUP 12R 2
Sht. 9

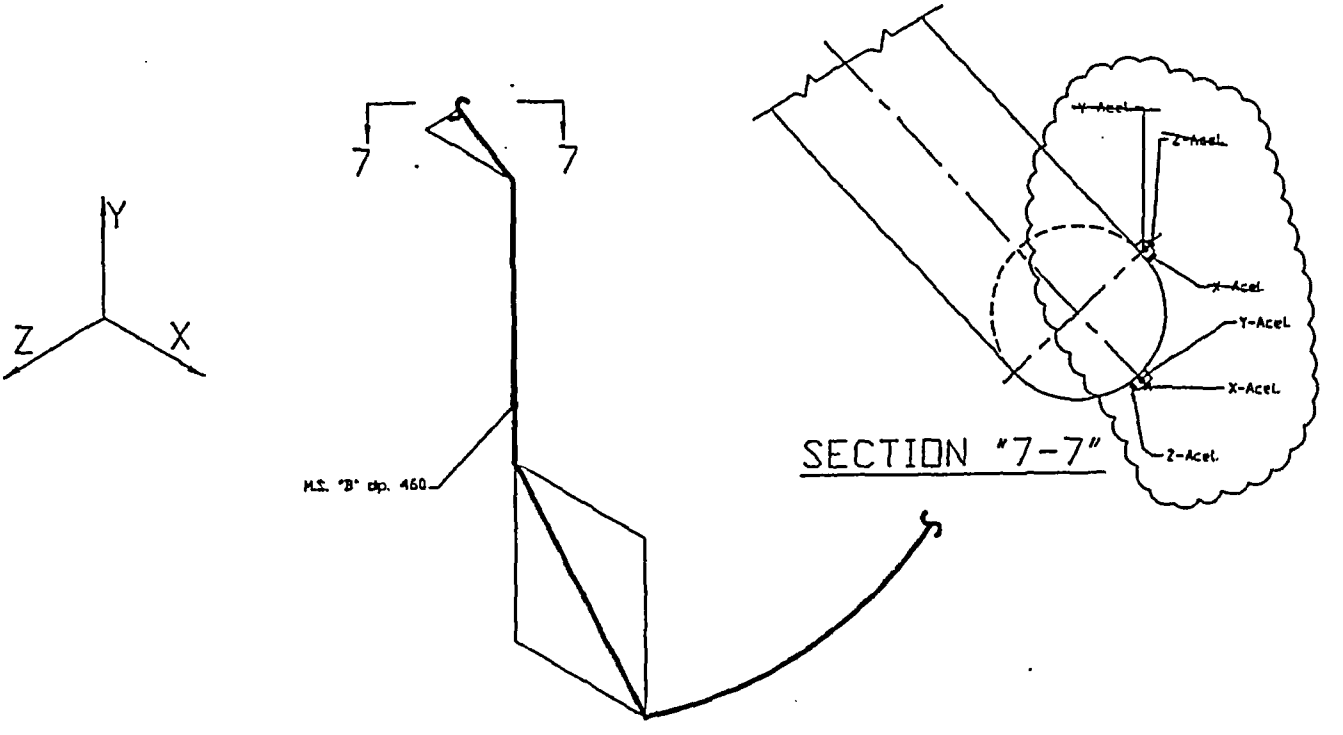

DCP 80062466 Rev.0
SUP 12R'2
Sht. 10

M.S. 'B' (SRV-'P')
DP. 40P

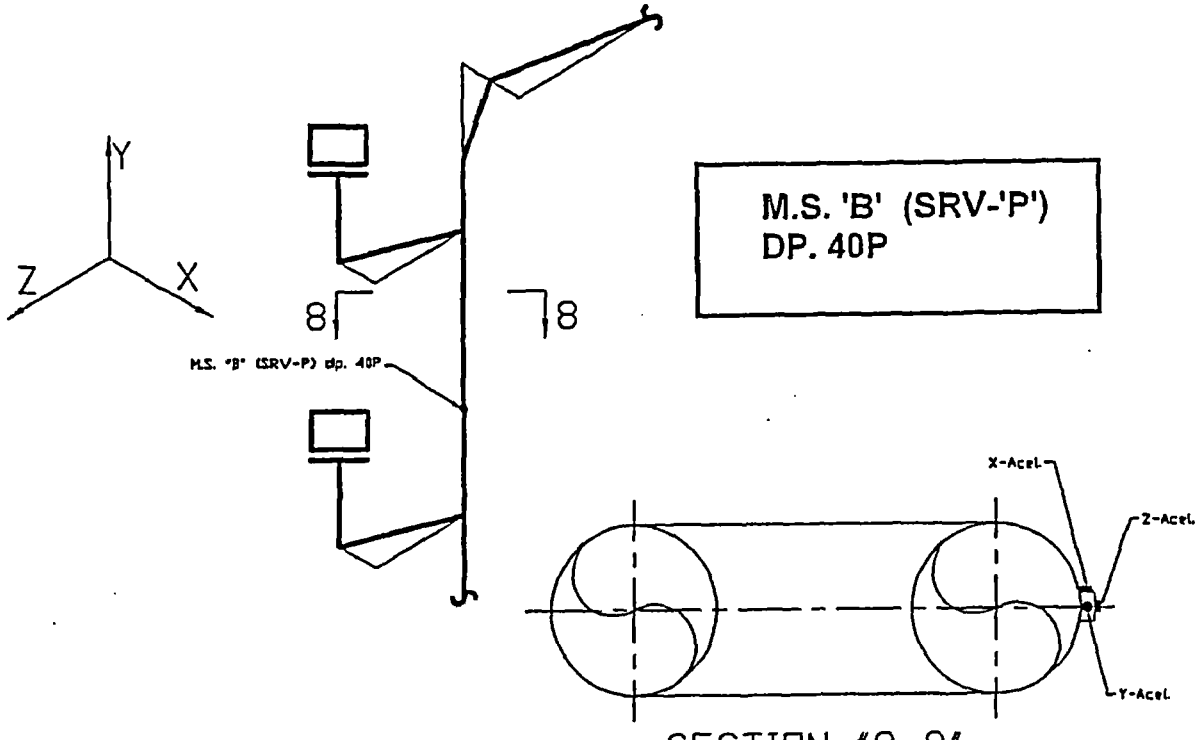

SECTION "8-8"

DCP 80062466 Rev.0
SUP 12R 2
Sht. 11

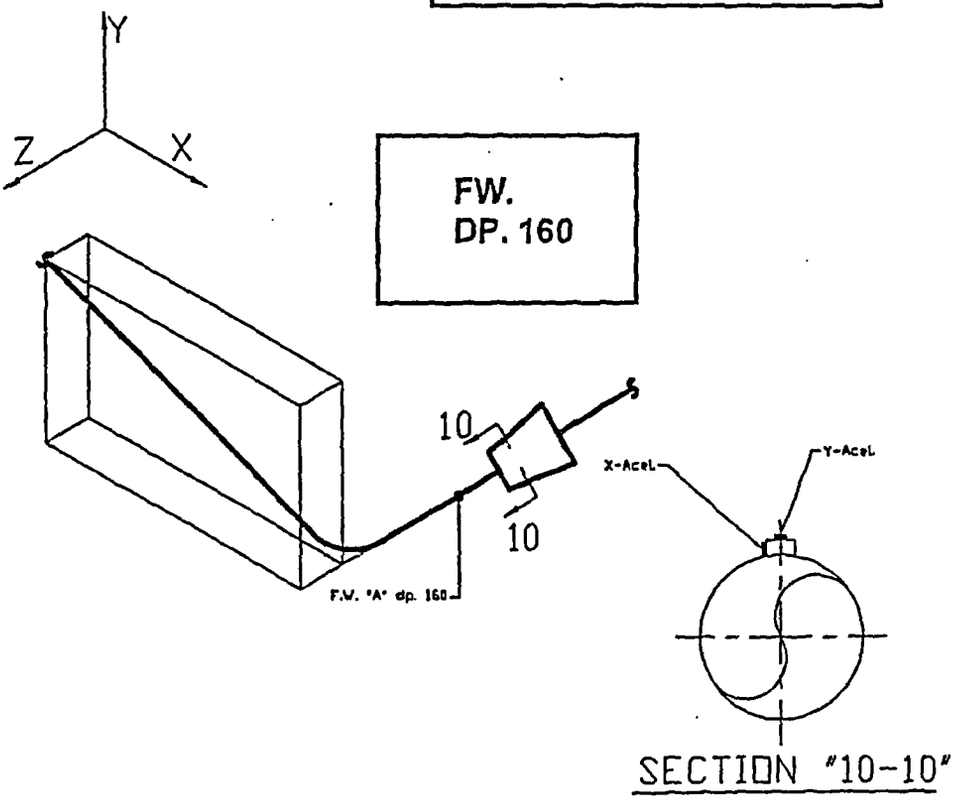

DCP 80062466 Rev.0
SUP 12R2
Sht. 12

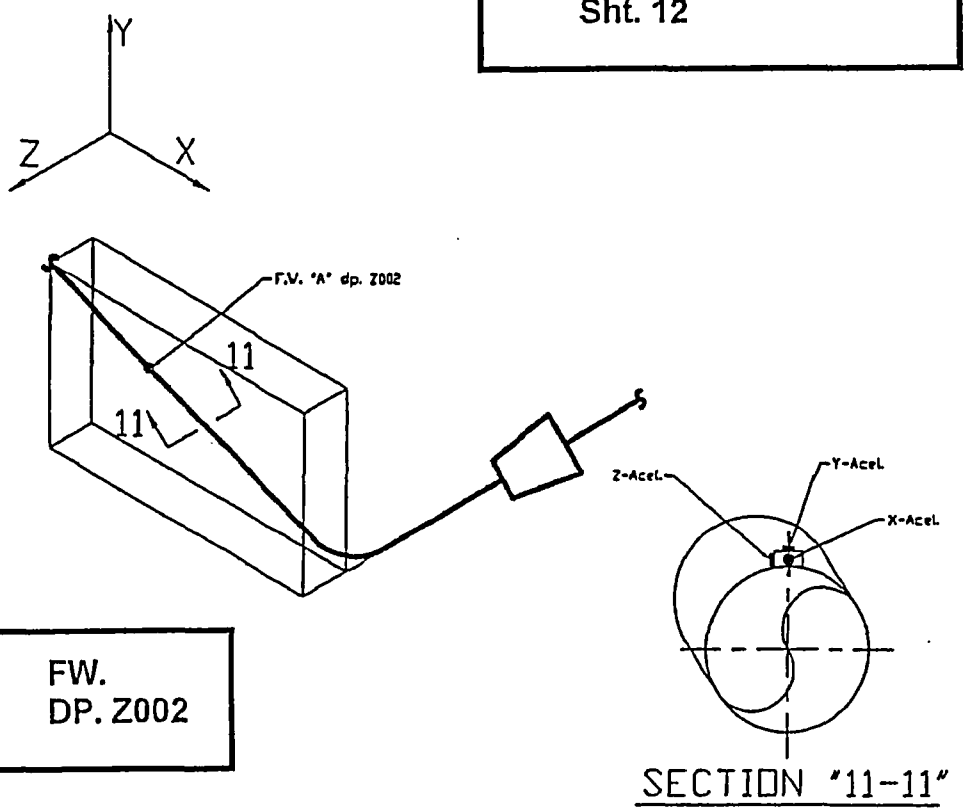

FW.
DP. Z002

DCP 80062466 Rev.0
SUP 12R2
Sht. 13

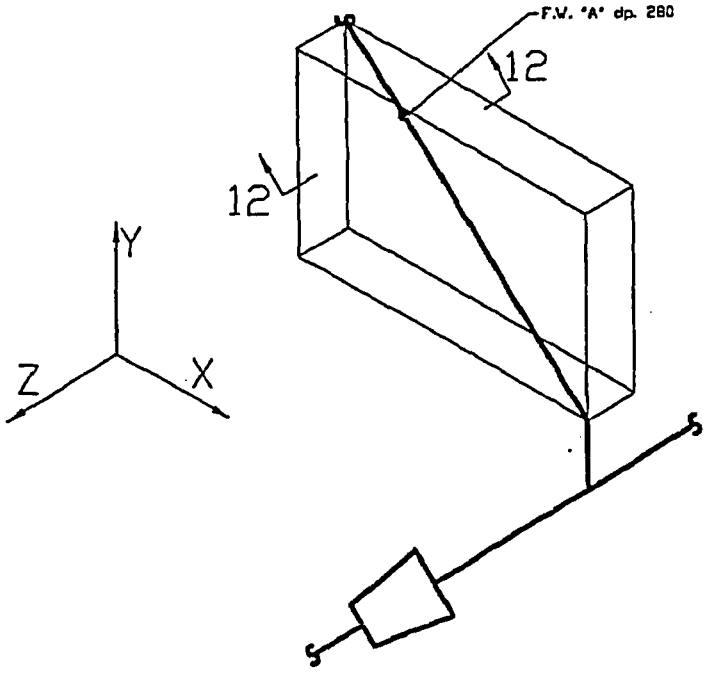

FW.
DP. 280

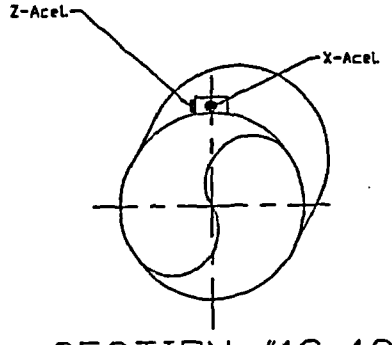

SECTION "12-12"

DCP 80062466 Rev.0
SUP 12R 2
Sht. 14

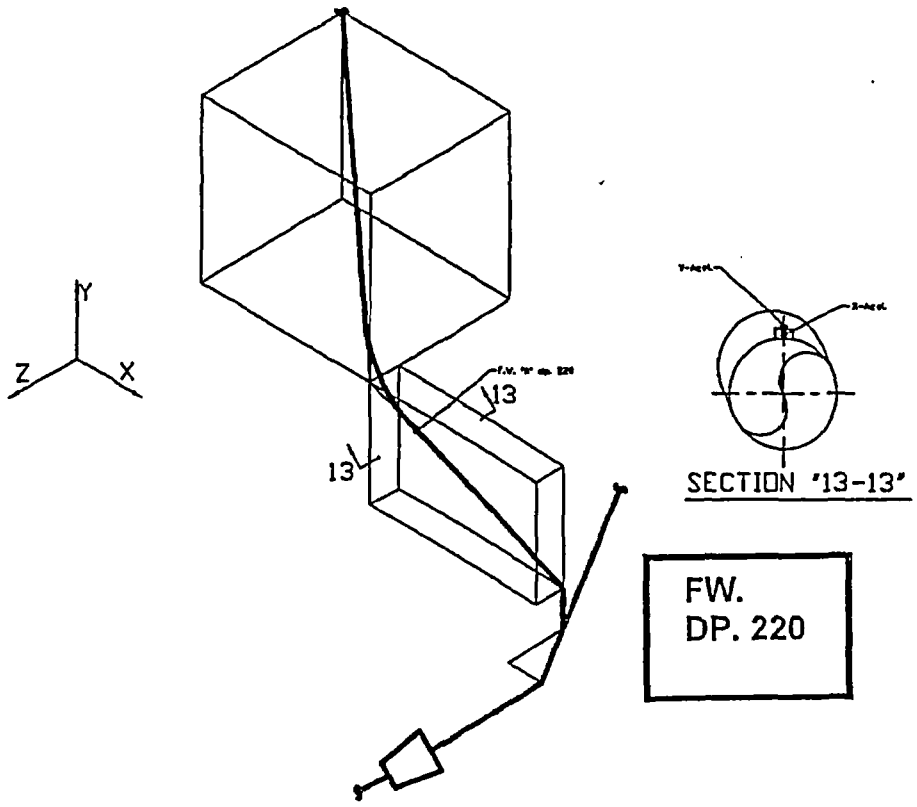

FW.
DP. 220

DCP 80062466 Rev.0
SUP 12R 2
Sht. 15

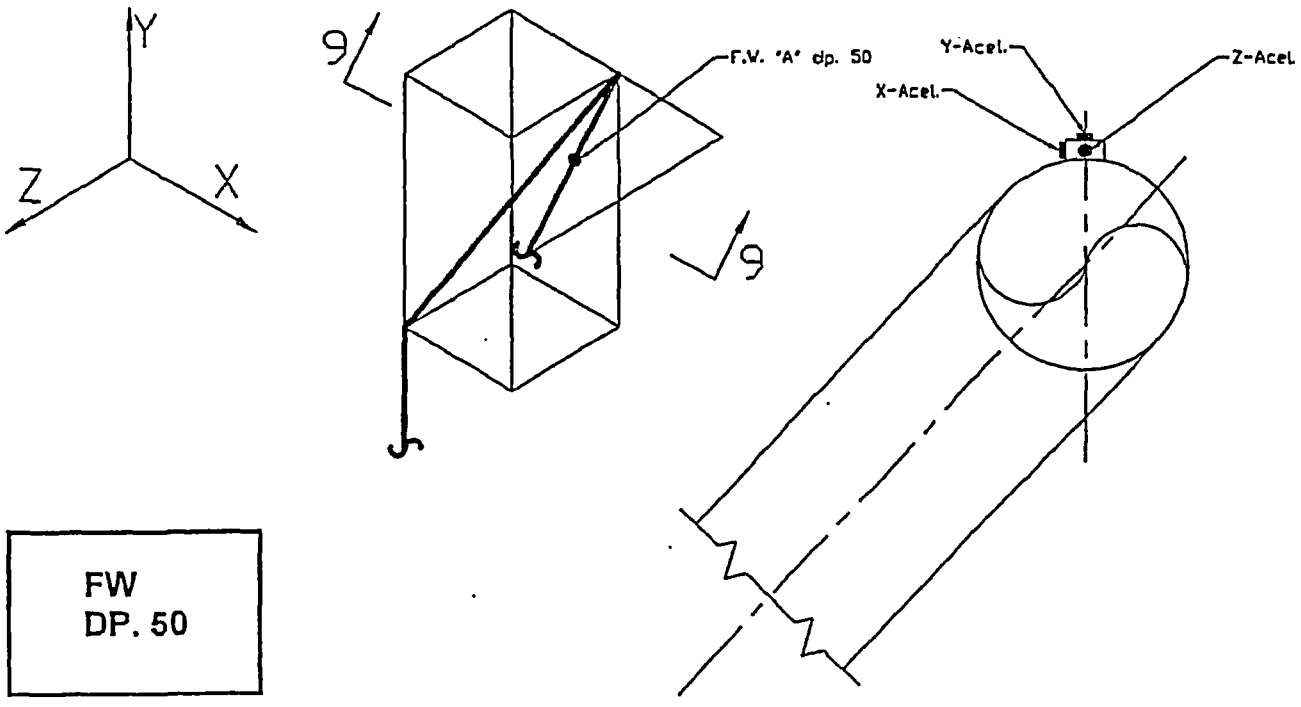

FW
DP. 50

SECTION "9-9"

DCP 80062466 Rev.0
SUP 12R2
Sht. 16

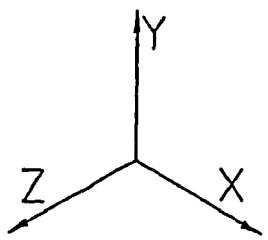

Recirc 'A'
DP. 323

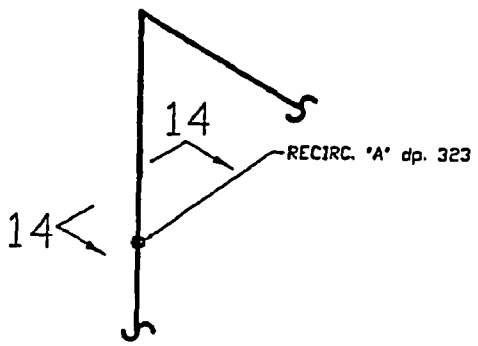

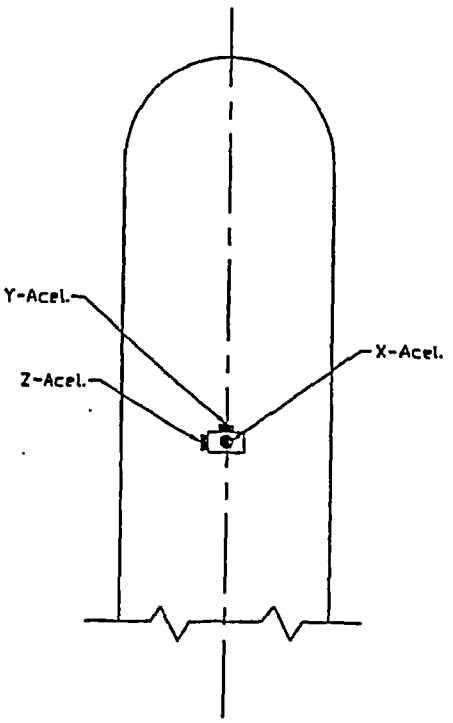

SECTION "14-14"

DCP 80062466 Rev.0
SUP 12R 2
Sht. 17

Recirc 'A'
DP. 14

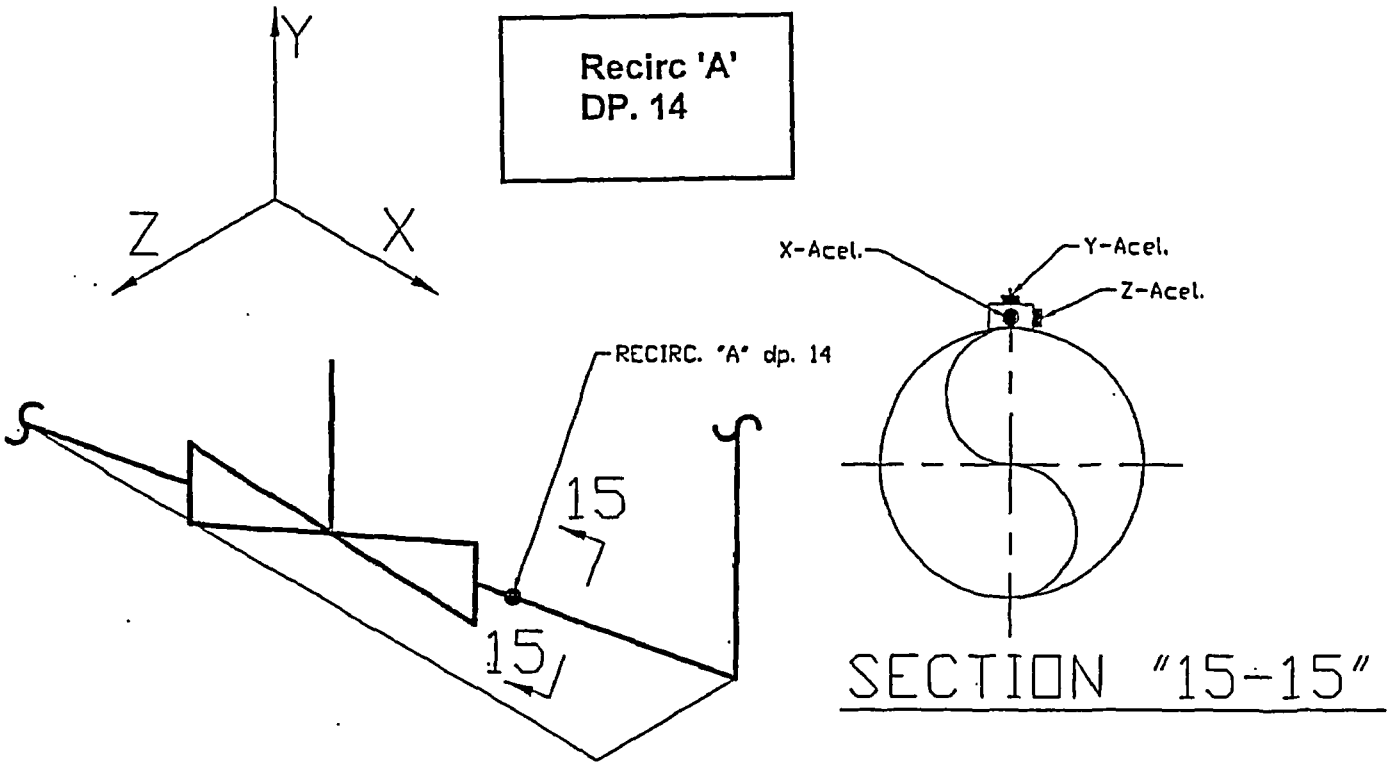

Recirc 'A' (RHR)
DP. 602

DCP 80062466 Rev.0
SUP 12 R 2
Sht. 18

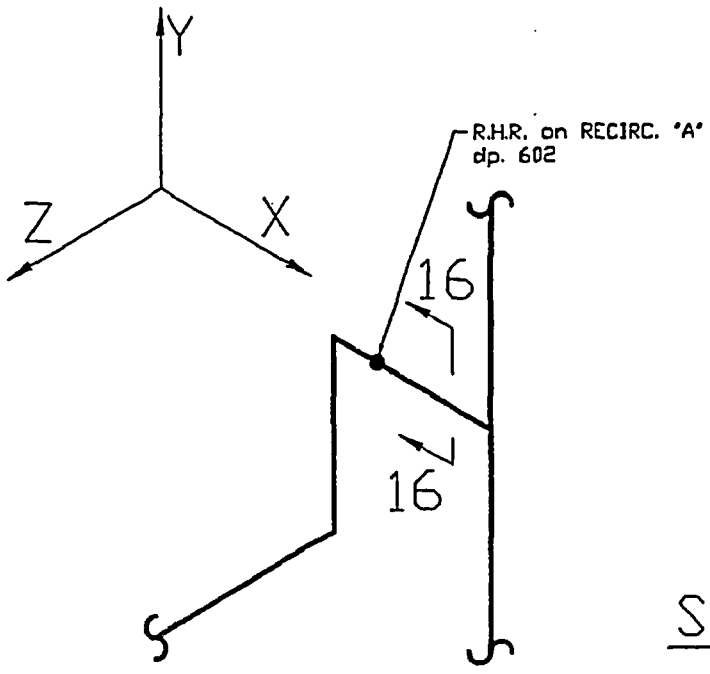

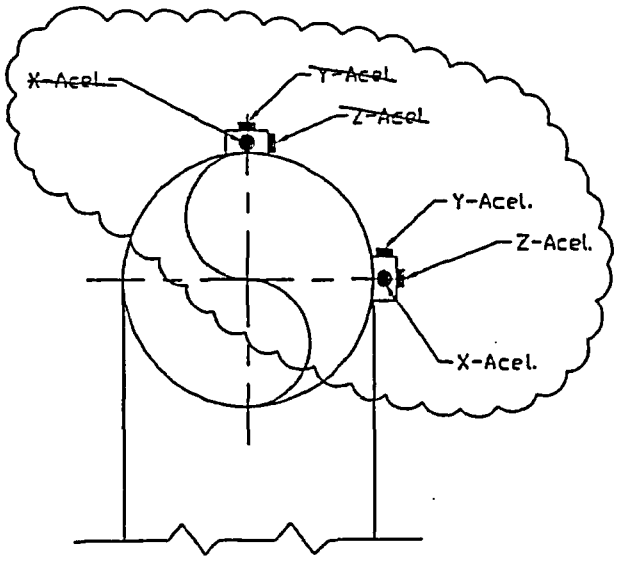

SECTION "16-16"

DCP 80062466 Rev.0
SUP 12 R 2
Sht. 19

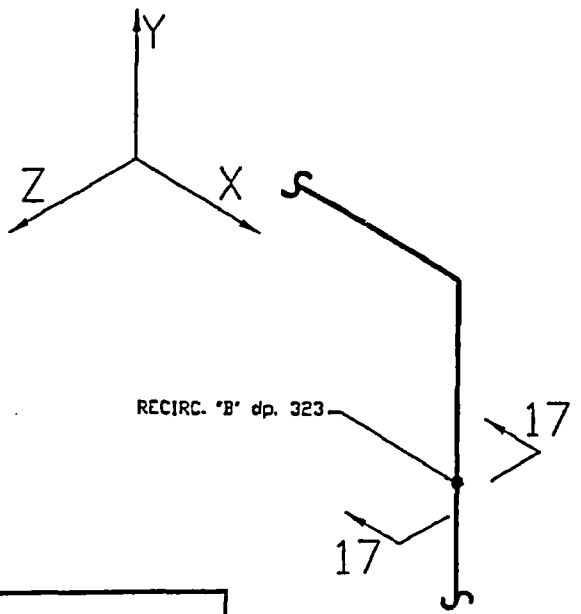

Recirc 'B'
DP. 323

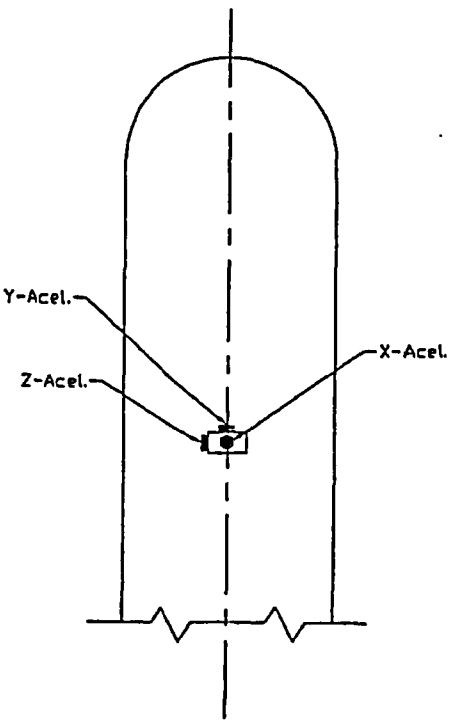

SECTION "17-17"

DCP 80062466 Rev.0
SUP 12R2
Sht. 20

Recirc 'B'
DP. 13

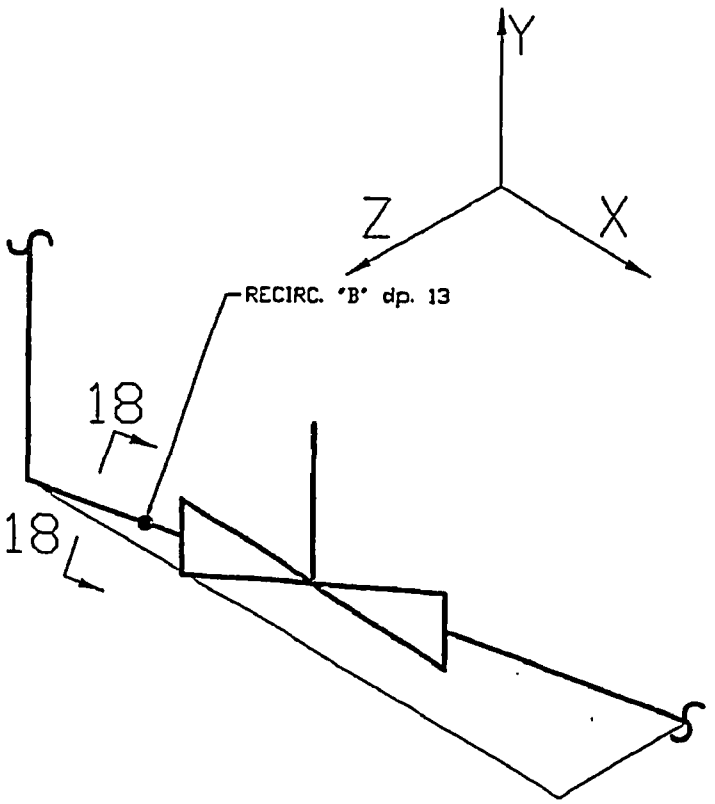

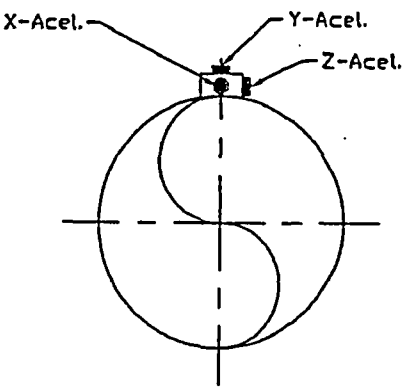

SECTION "18-18"

DCP 80062466 Rev.0
SUP 12R·2
Sht. 21

Recirc 'B' (RHR)
DP. 506F

* Accels at DP. 515N installed in lieu of DP. 506F.

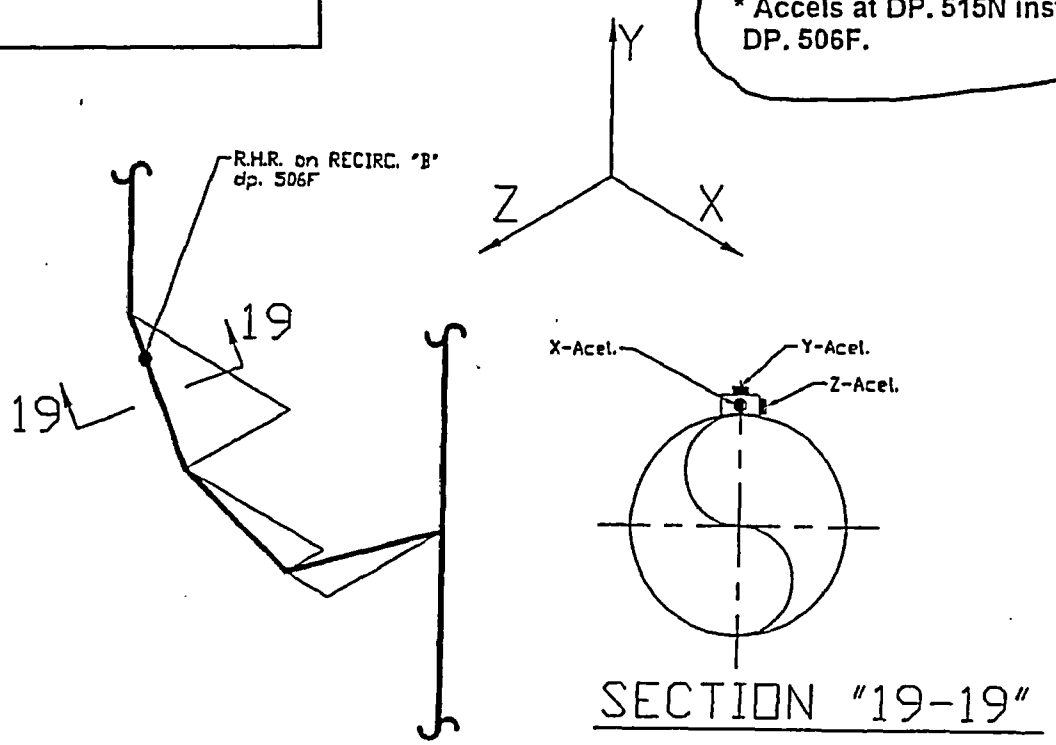

DCP 80062466 Rev.0
SUP 12 R 2
Sht. 22

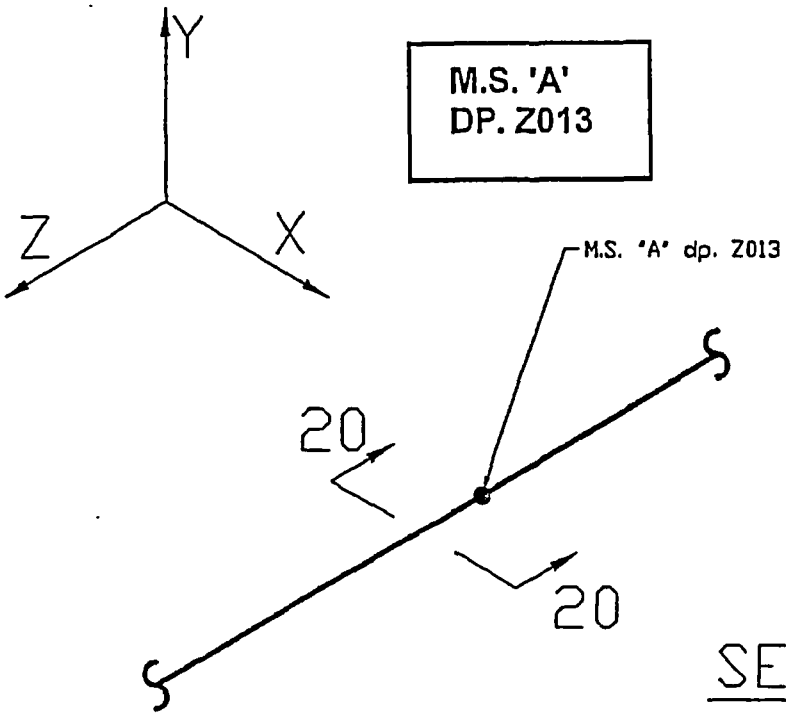

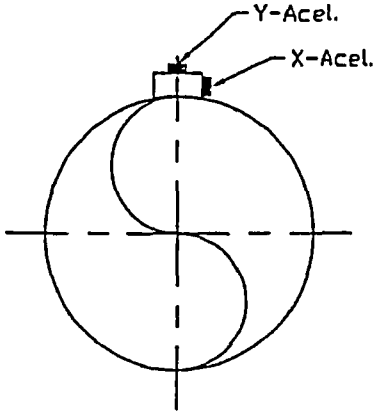

SECTION "20-20"

DCP 80062466 Rev.0
SUP 12 R 2
Sht. 23

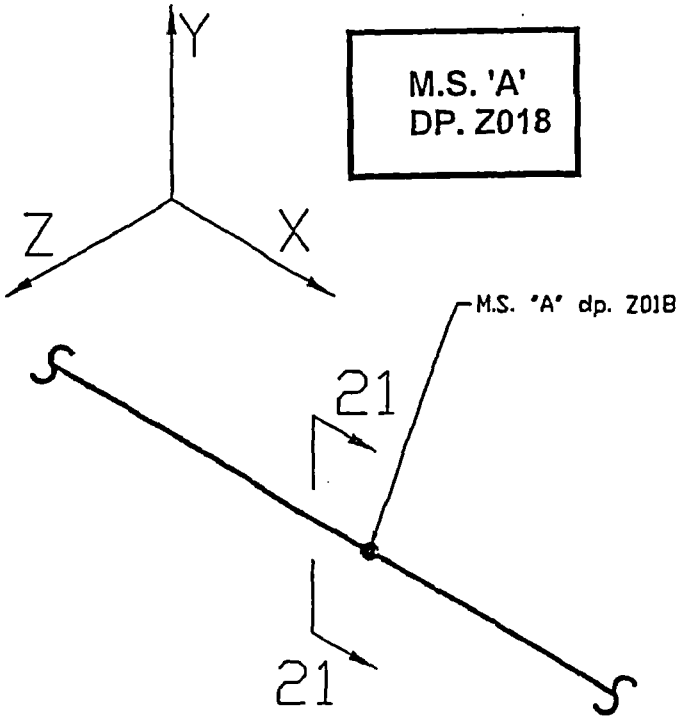

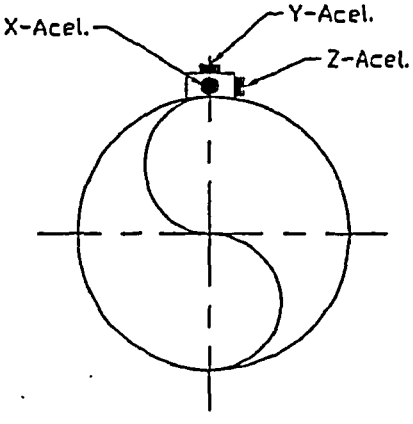

SECTION "21-21"

DCP 80062466 Rev.0
SUP 12R2
Sht. 24

M.S. 'B'
DP. Z003

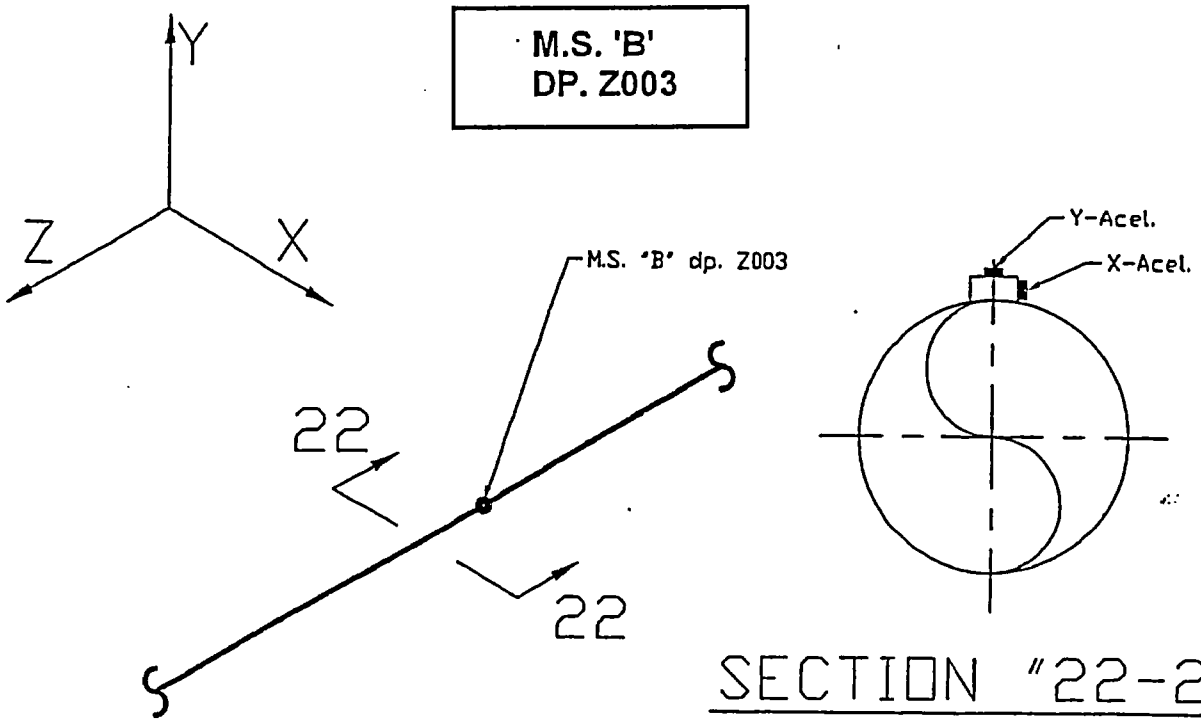

SECTION "22-22"

DCP 80062466 Rev.0
SUP 12 R'2
Sht. 25

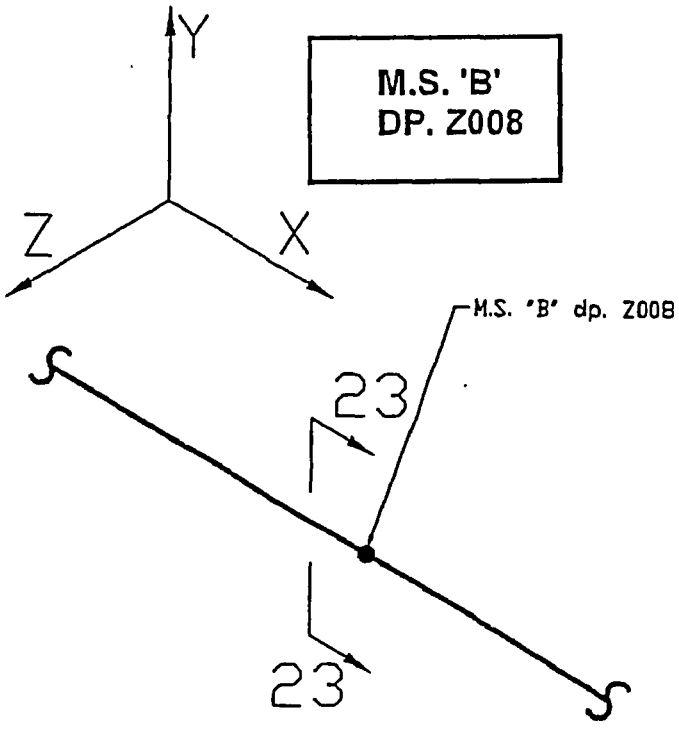

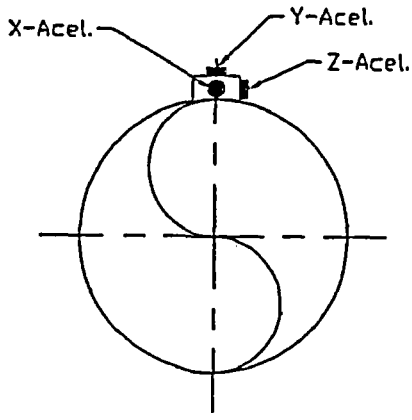

SECTION "23-23"

DCP 80062466 Rev.0
SUP 12R2
Sht. 26

FW.
DP. 817

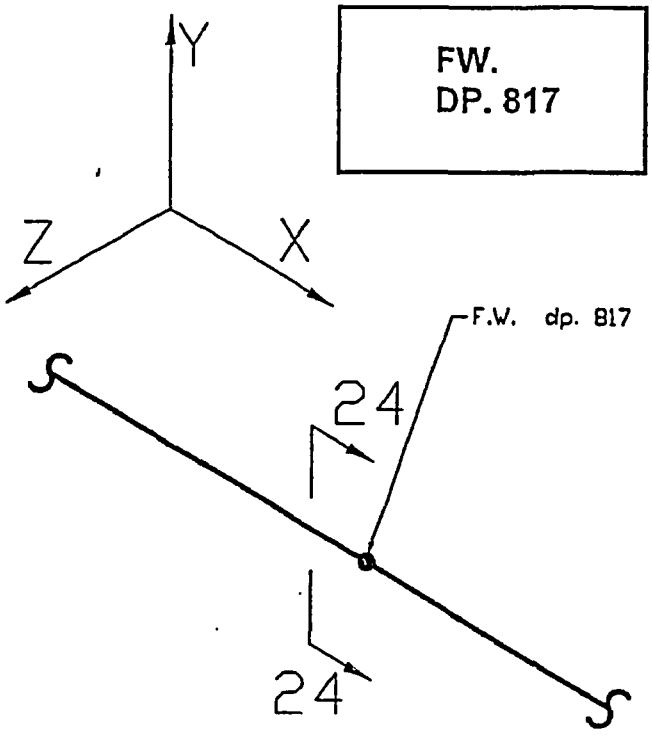

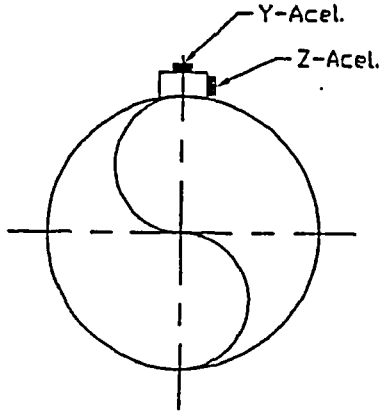

SECTION "24-24"

DCP 80062466 Rev.0
SUP 12 R·2
Sht. 27

FW.
DP. 731

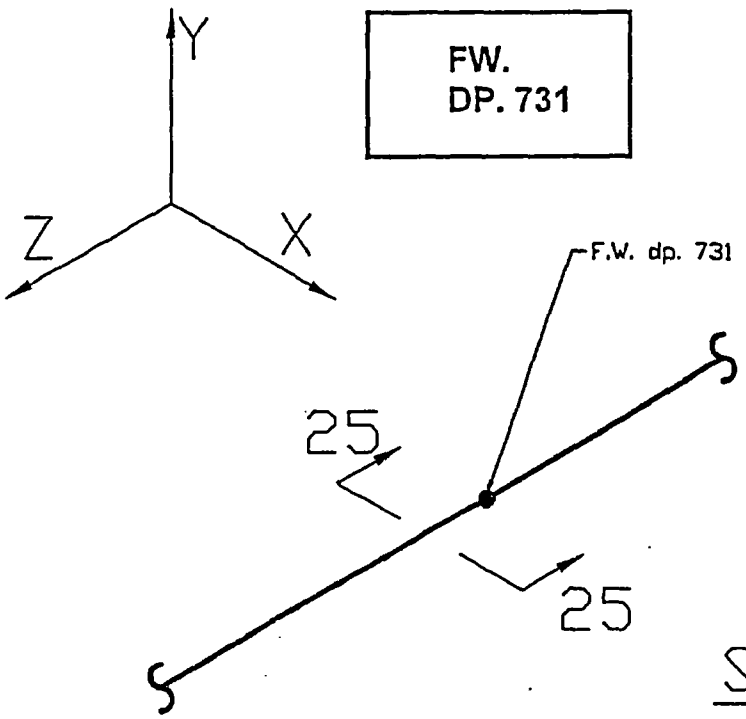

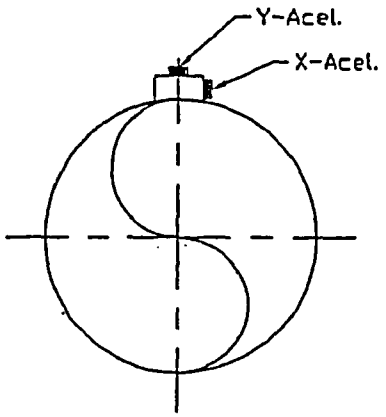

SECTION "25-25"

DCP 80062466R0
SUP12R2
Sht. 28

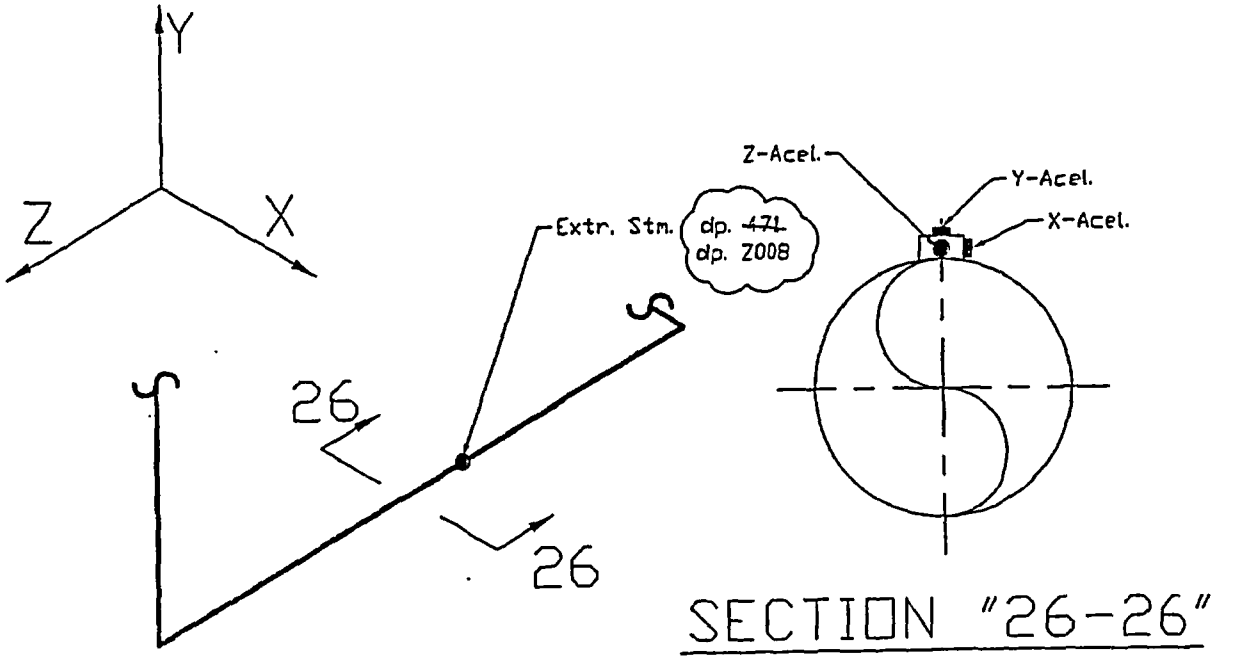

DCP 80062466R0
SUP12R2
Sht. 29

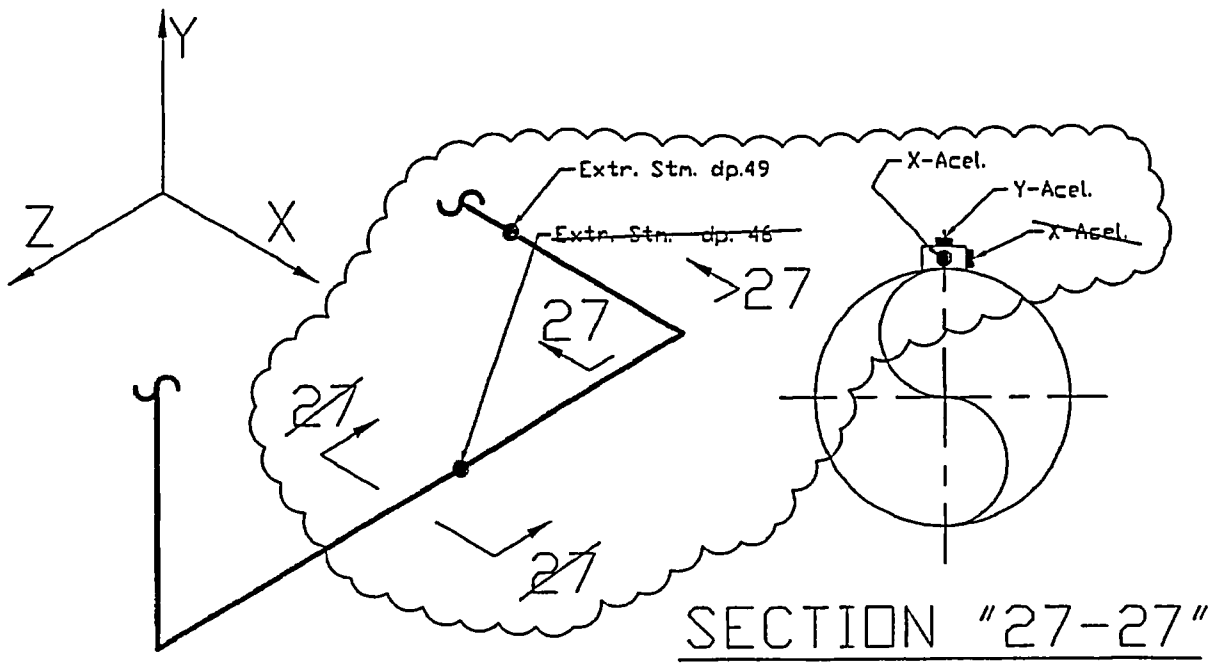

DCP 80062466 Rev.0
SUP 12R 2
Sht. 30

Extraction Steam
DP. 230G

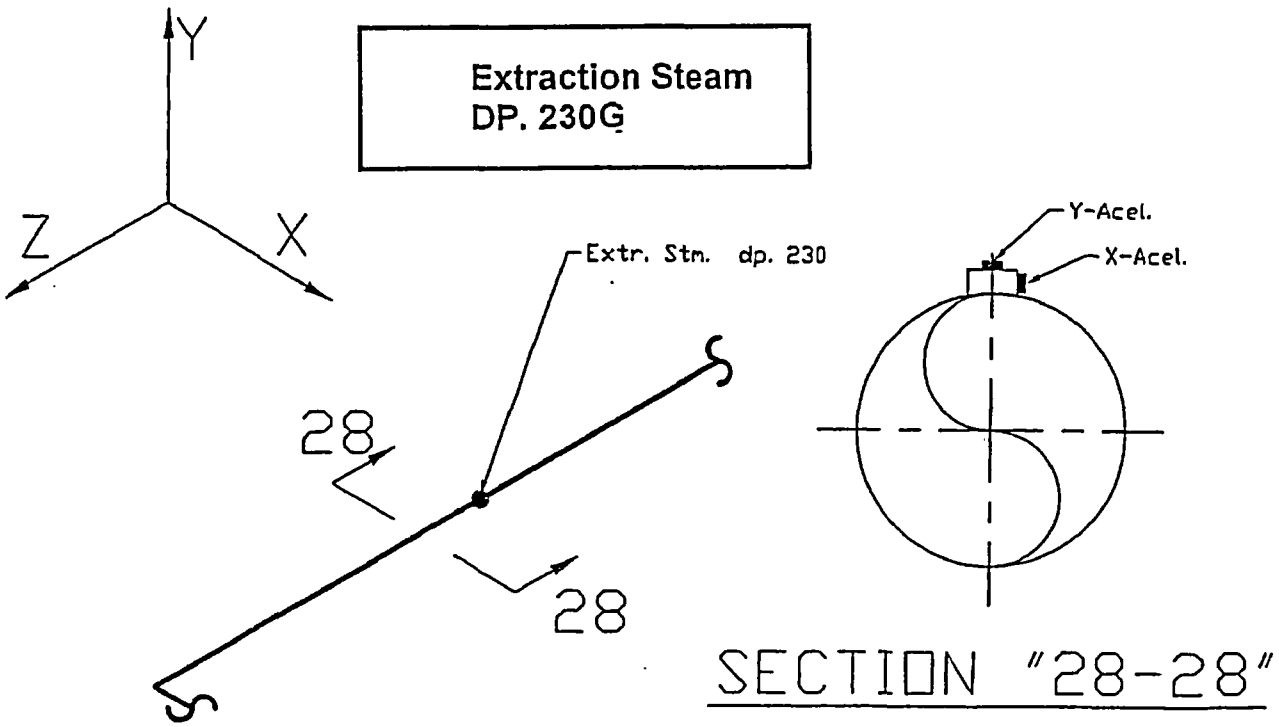

DCP 80062466 Rev.0
SUP 12 R 2
Sht. 31

Extraction Steam
DP. Z010

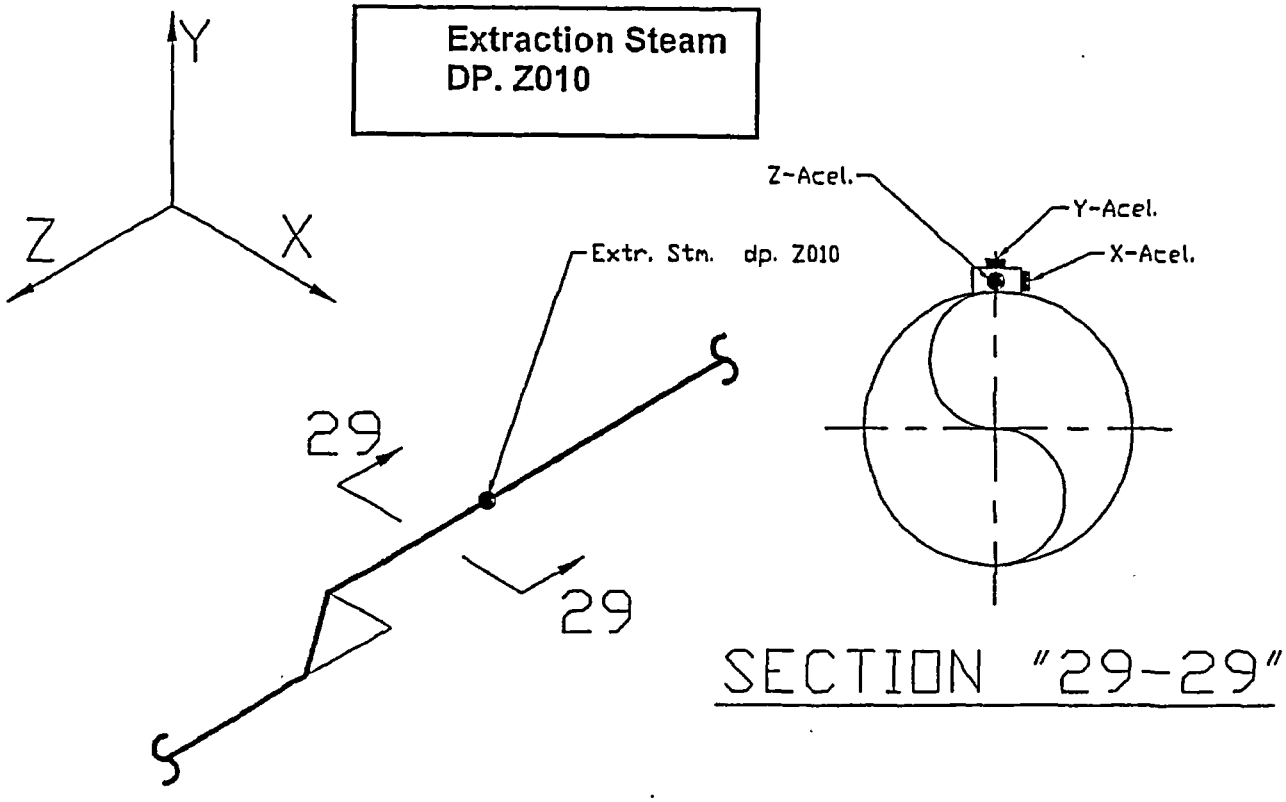

DCP 80062466R0
SUP12R 2
Sht. 32

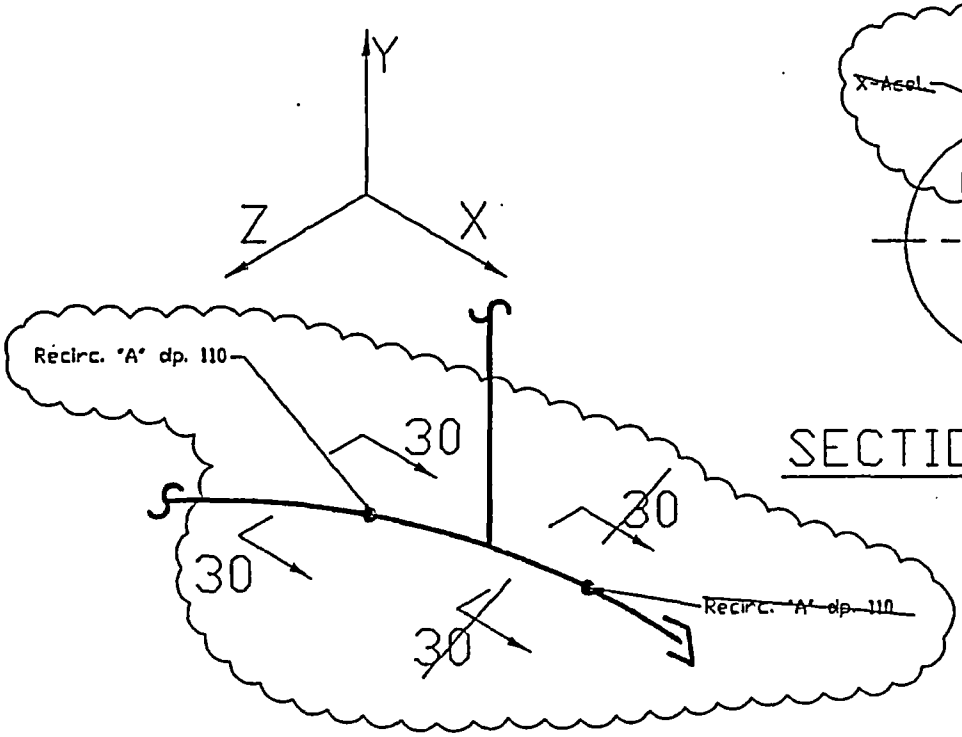

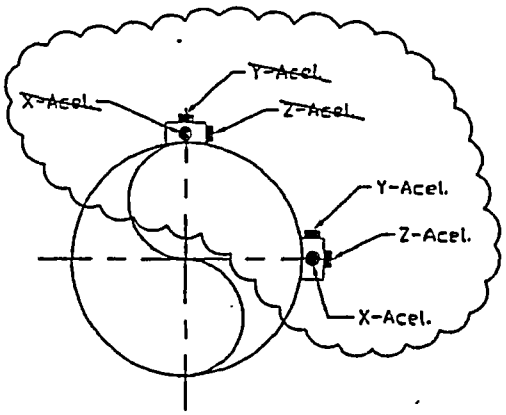

SECTION "30-30"

DCP 80062466R0
SUP12R2
Shtl. 33

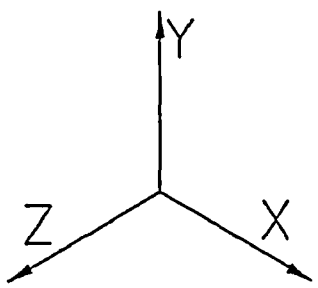

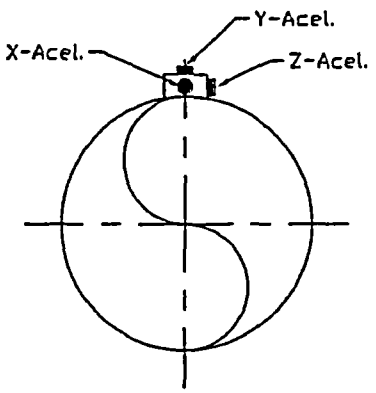

SECTION "31-31"

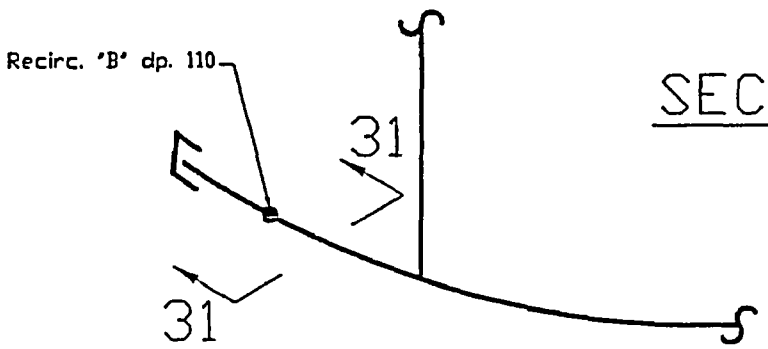

DCP 80062466R0
SUP12R 2
Sht. 34

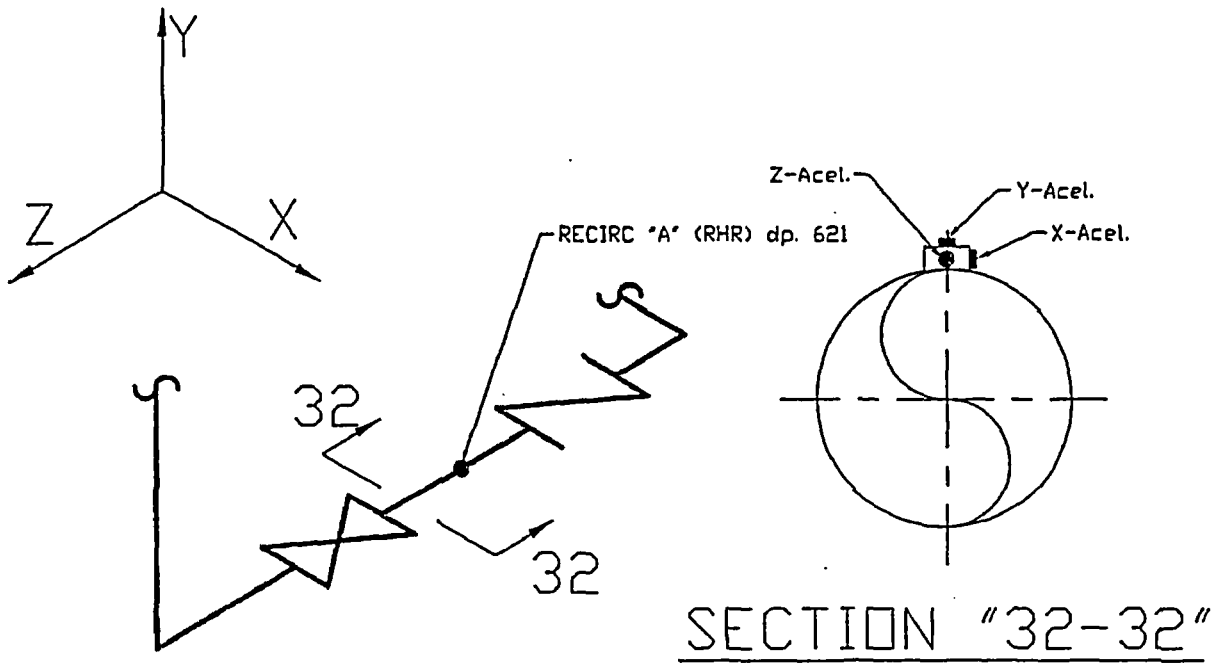

DCP 80062466R0
SUP12R2
Sht. 35

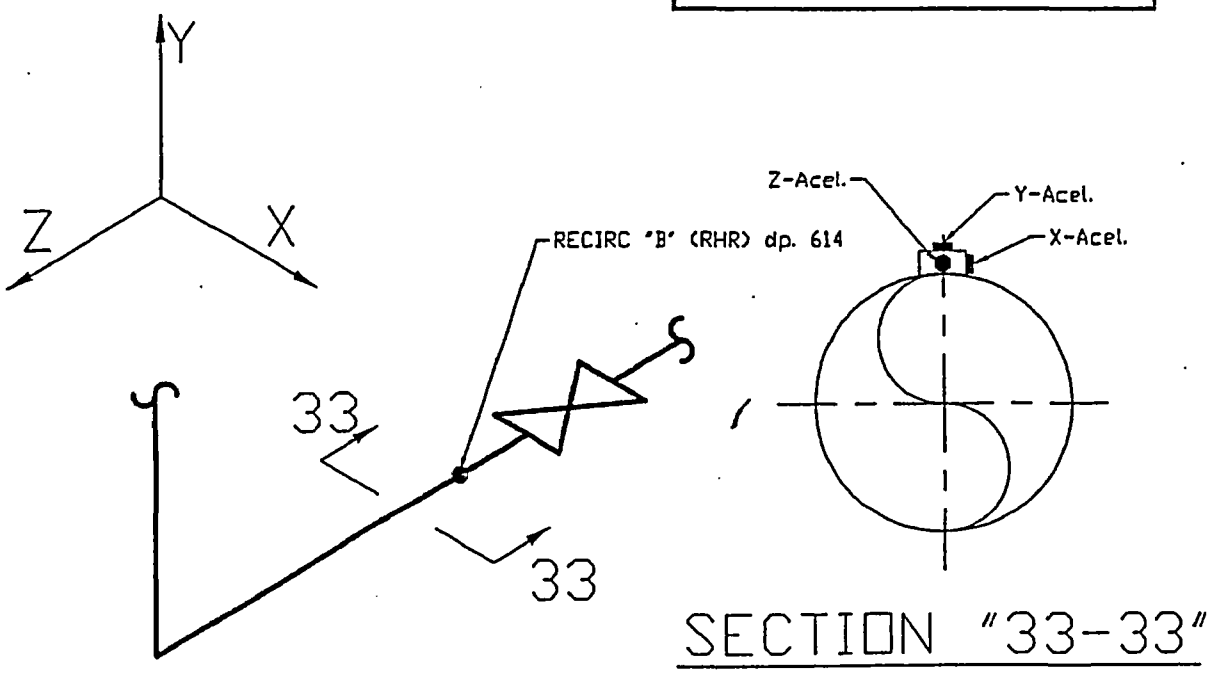

DCP 80062466R0
SUP12R2
Sht. 36

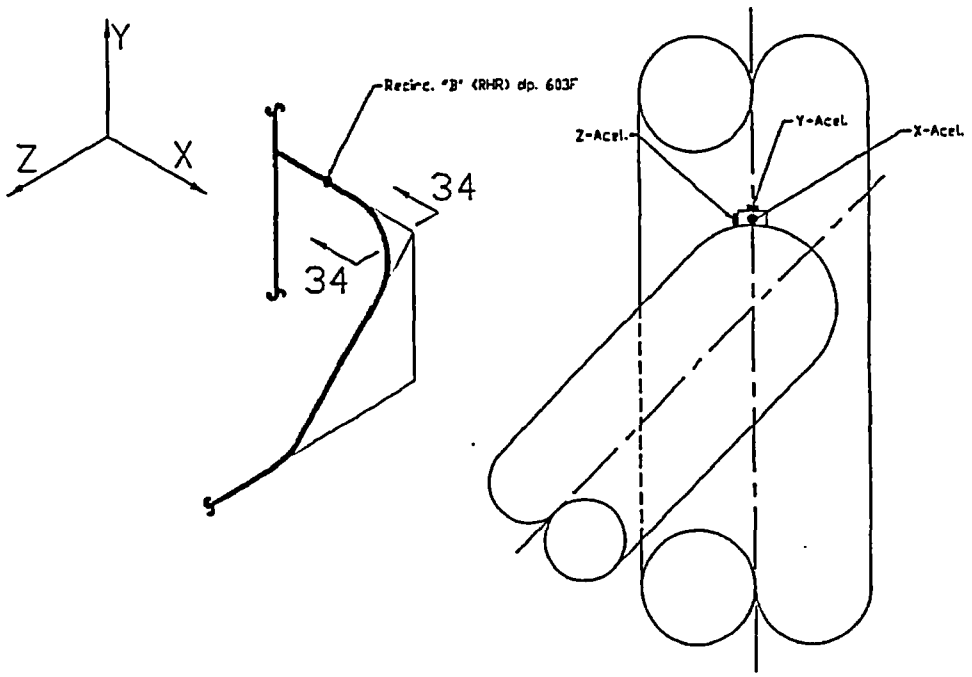

SECTION "34-34"

DCP 80062466R0
SUP12R2
Sht. 37

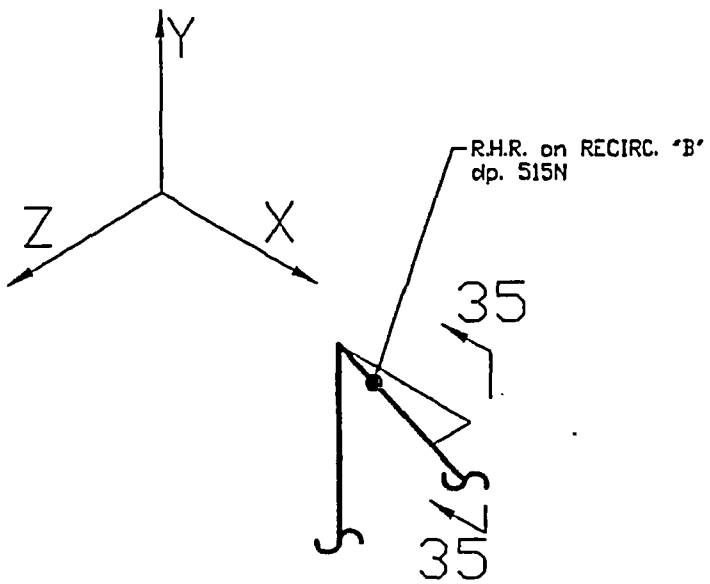

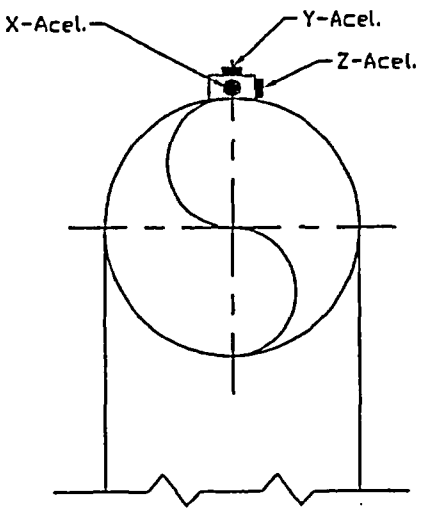

SECTION "35-35"

DCP 80062466R0
SUP12R2
Sht. 38

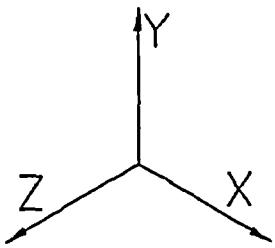

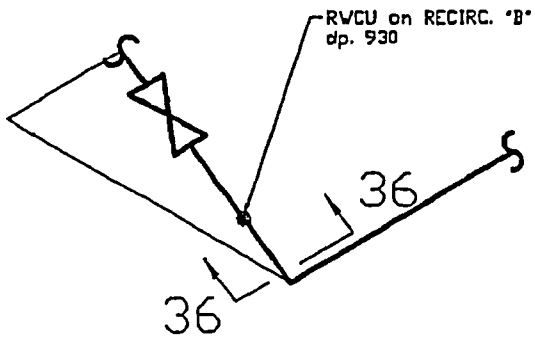

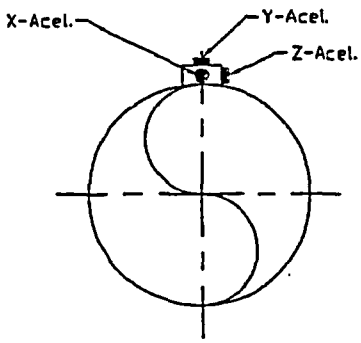

SECTION "36-36"

DCP 80062466R0
SUP12R 2
Sht. 39

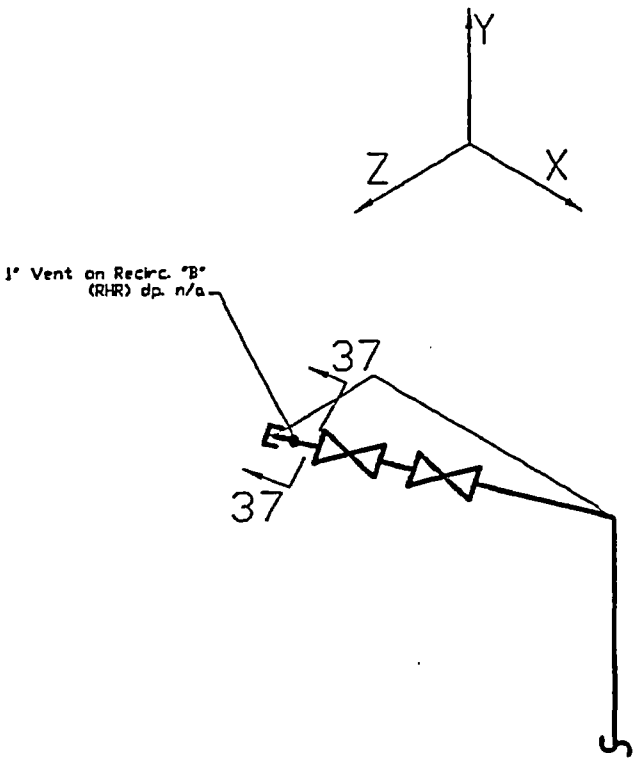

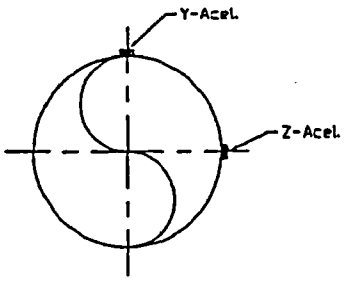

SECTION "37-37"

DCP 80062466R0
SUP12R2
Sht. 40

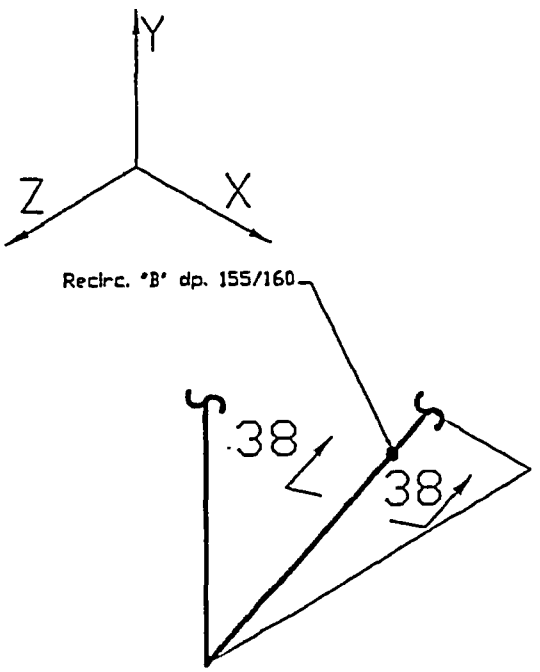

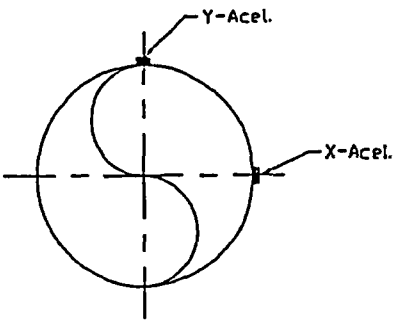

SECTION "38-38"

DCP 80062466R0
SUP12R2
Sht.41

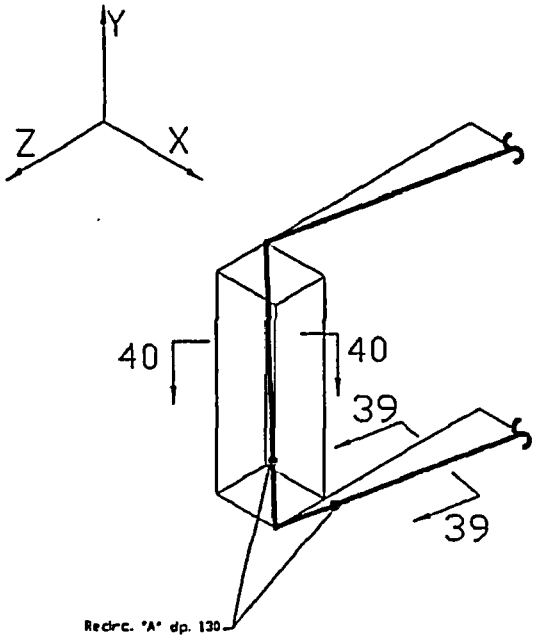

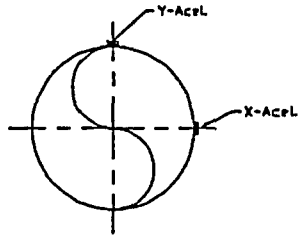

SECTION "39-39"

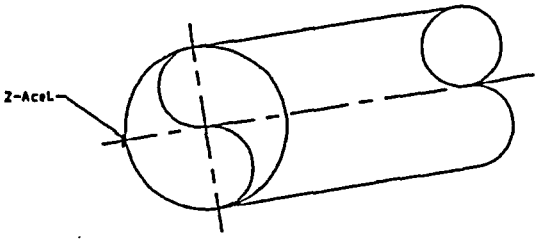

SECTION "40-40"

DCP 80062466R0
SUP12R2
Sht. 42

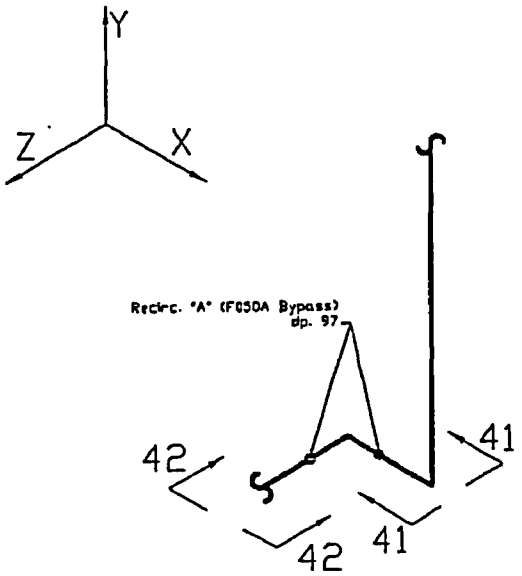

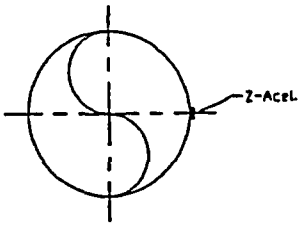

SECTION "41-41"

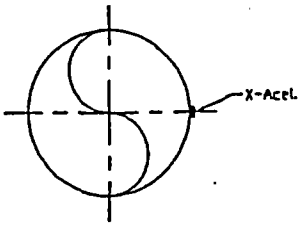

SECTION "42-42"

Holes are to be drilled 1"deep to accept 1/4 - 20UNC Socket Head Cap Screws. Match Drill holes To fit mounting blocks. Loctite Cap Screws.

DCP 80062466 Rev.0
SUP12R2
Sht. 43

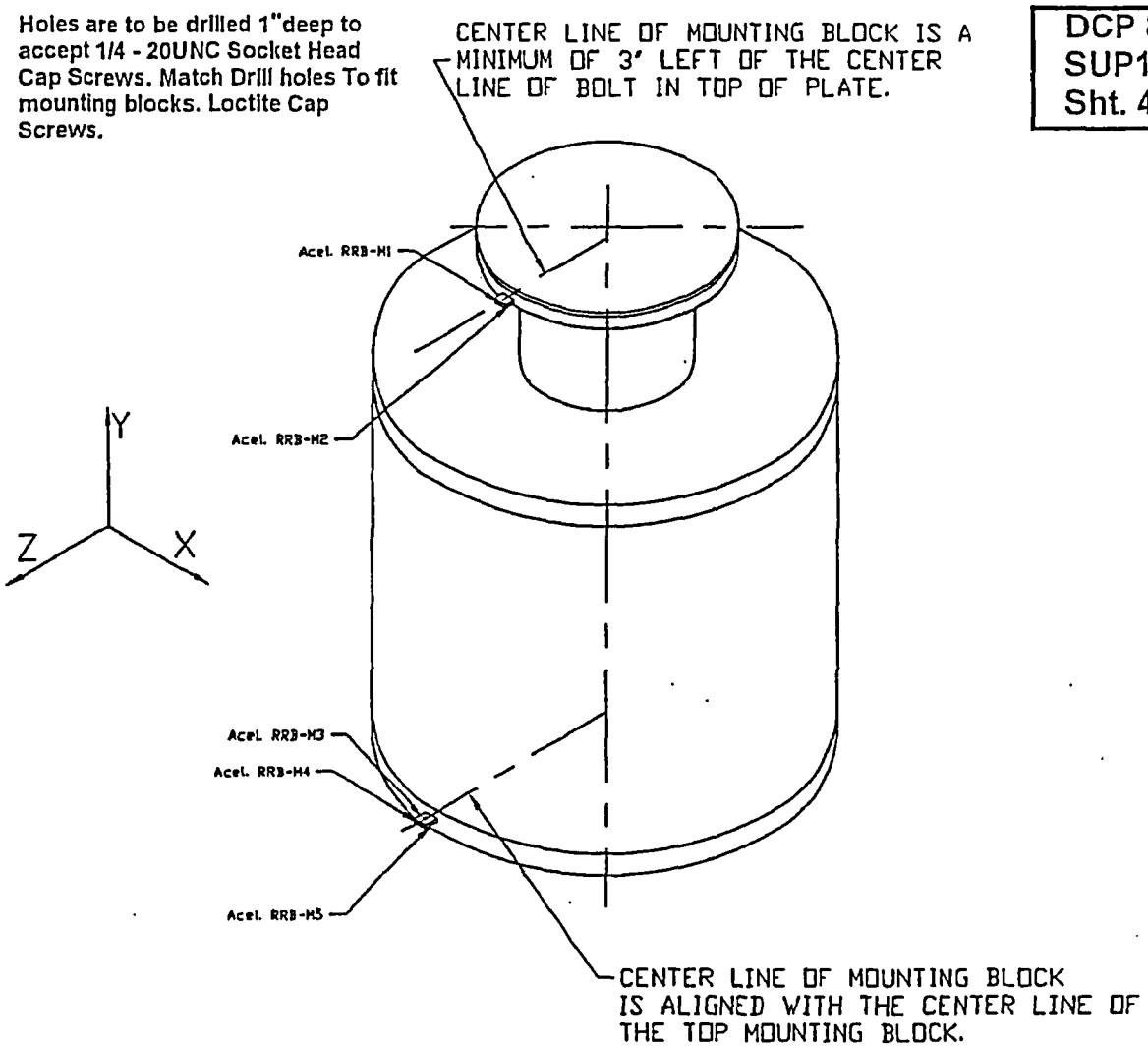

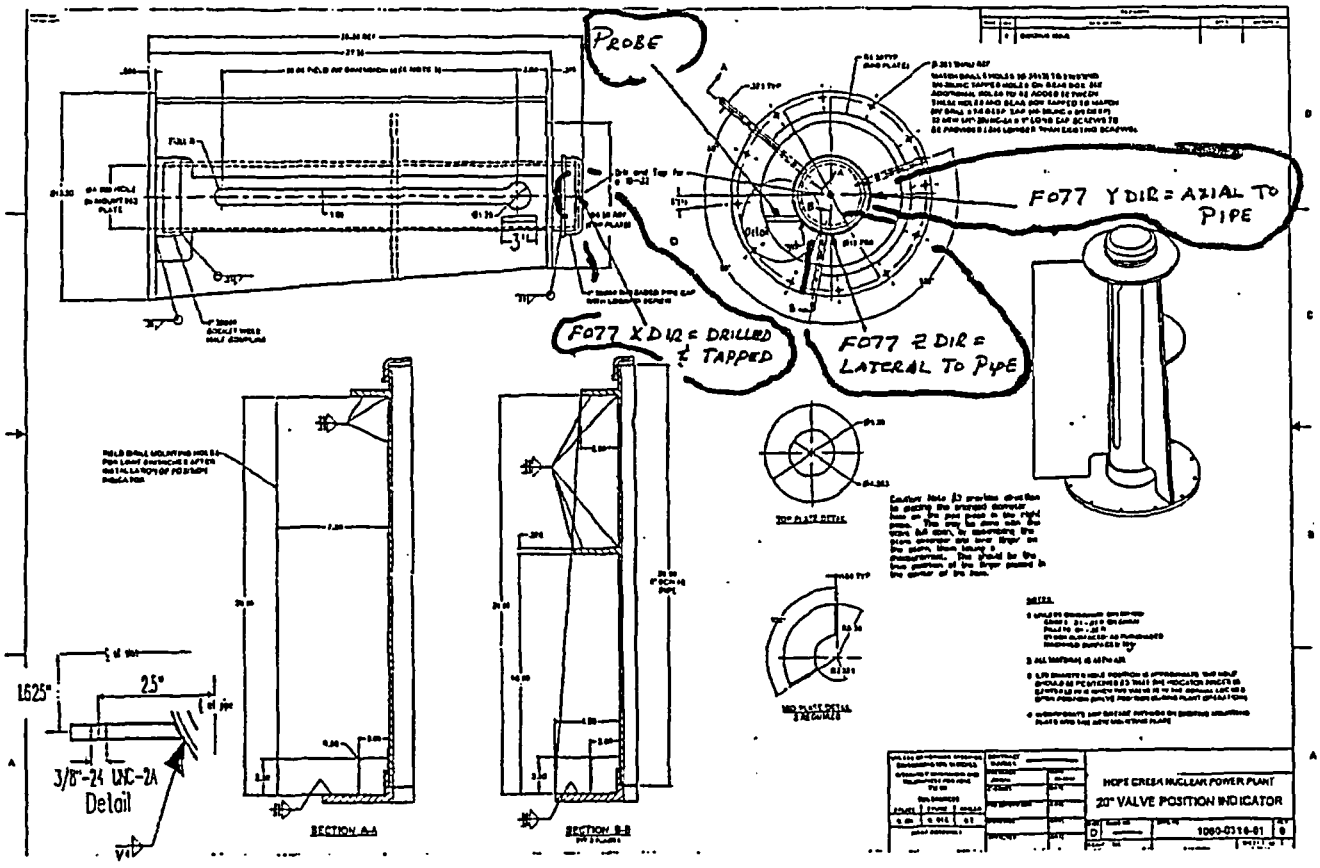

Probe Mounting Installed Per DCP 80072763

DCP 80062466R0
SUP12R2
Sht.44

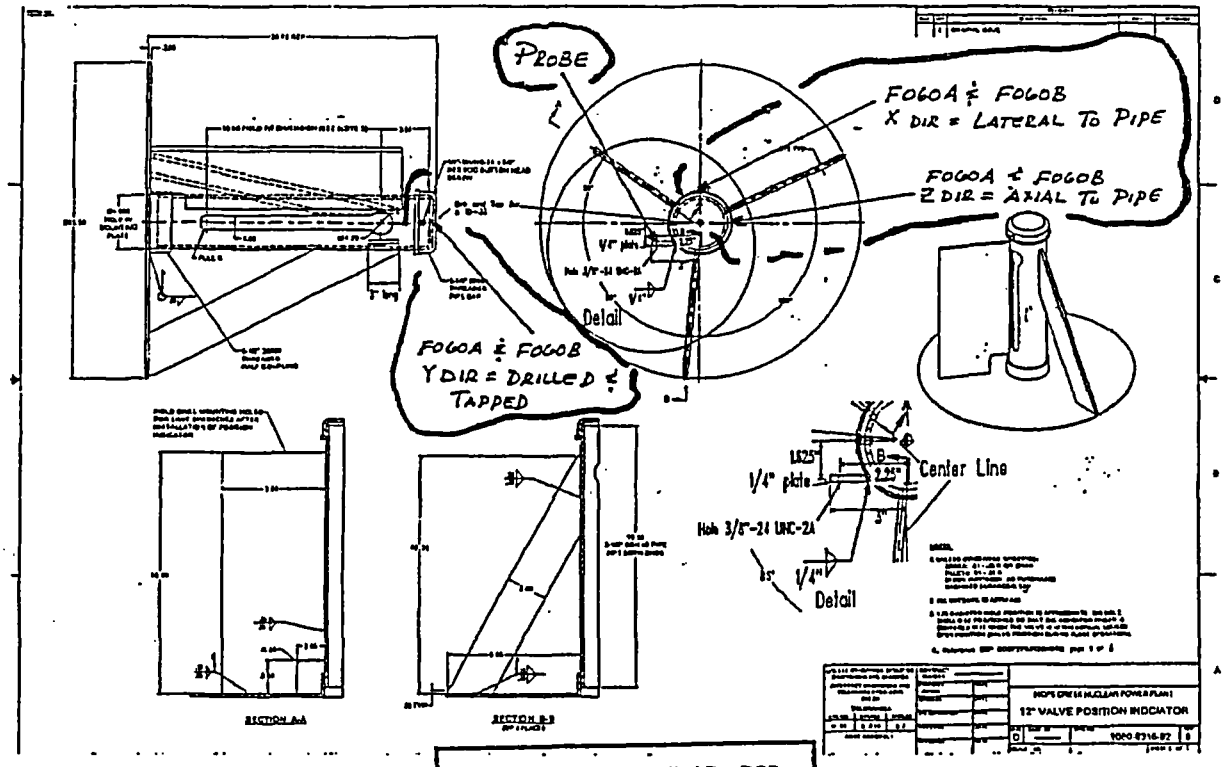

Probe Mounting Installed Per DCP 80072763.

DCP 80062466R0
SUP12R2
Sht. 45 of 45

Mounting Block Detail (Piping)

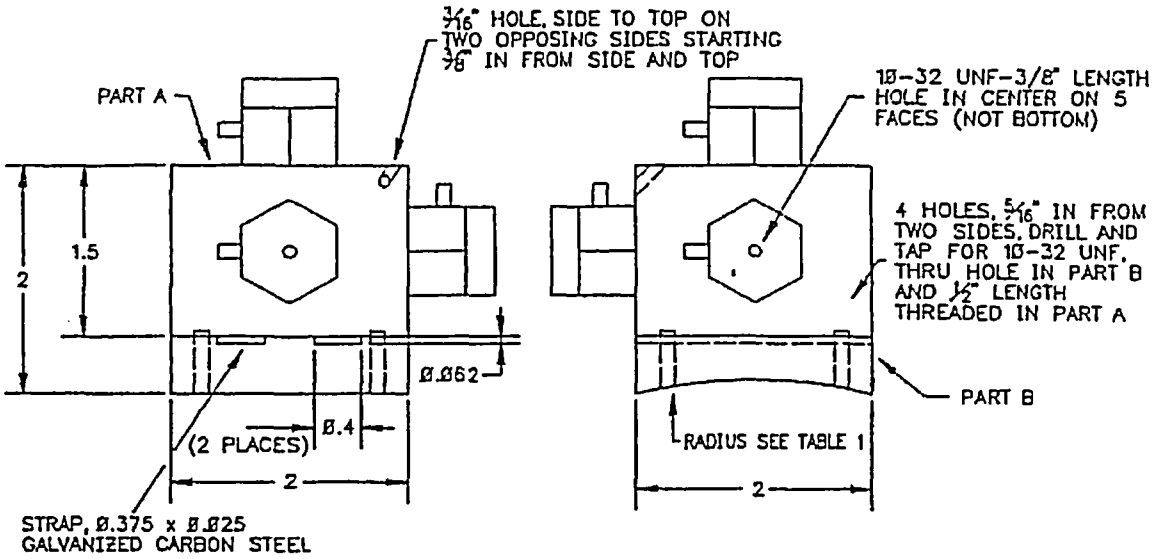

NOTES:
1. BLOCK MATERIAL IS STAINLESS STEEL (TYPE 304L OR 316).
2. SURFACE ROUGHNESS: 63 MICRO INCH
3. PERPENDICULARITY OF HOLE: 1 +/- 5 DEGREES
4. TAP CLASS: 2
5. DIMENSIONS IN INCHES UNLESS NOTED OTHERWISE.

DCP 80062466 Rev.1
SUP 18|R 1
Sht. 1 of 2

Recirc Pump Mounting Block

DCP 80062466 Rev.1
SUP18R1
Sht. 2 of 2

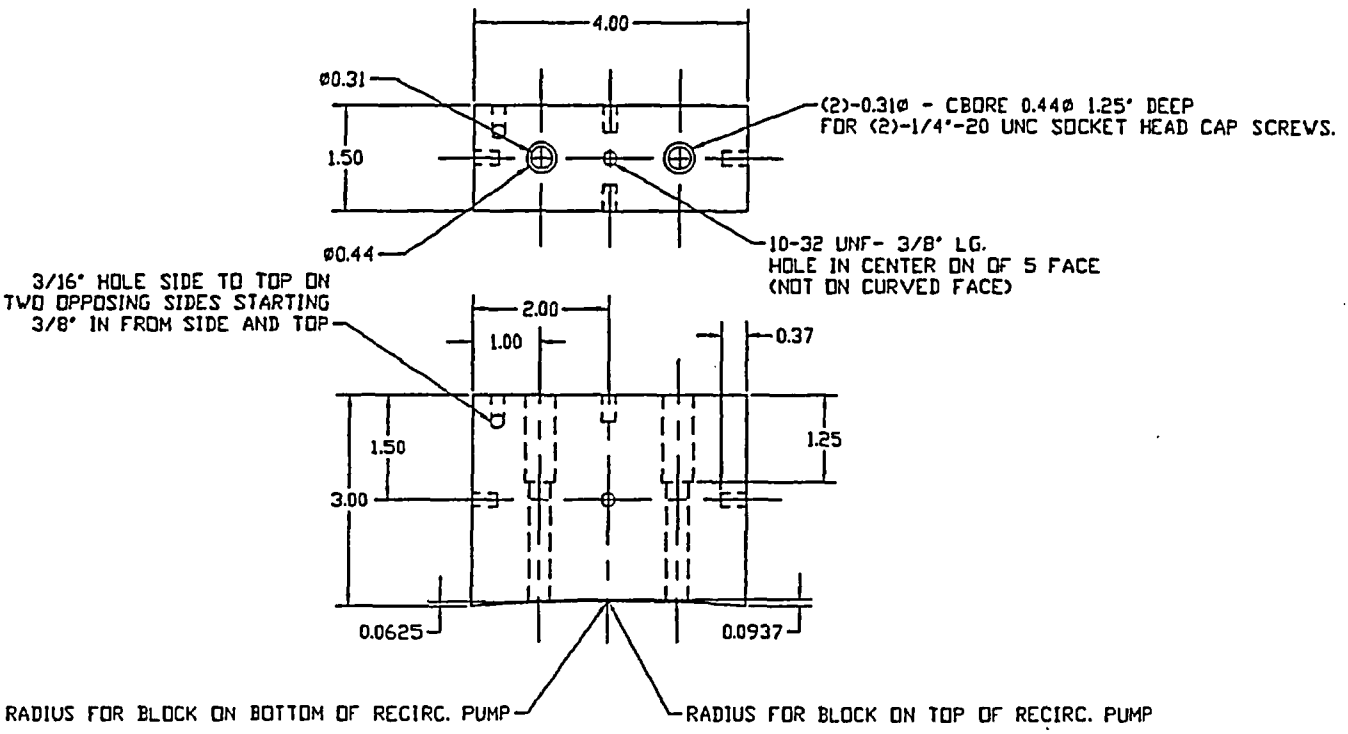

Drywell Accelerometers & Proximity Probes

DCP 80062466R3
SUP 22R0
SHT 1 of 5

FLOC No.	Channel Name	Channel No.	Penetration	Cable No.	System/System Designator	Drawing	Line#	Pipe Material	Node Pt.	Accel Dir.
H10S -2ACEL-11A	202-11A-RRA-14X	1	18W202	2RACEL11A-T	Recirc "A" / BB	FSK-P-169	BB-012-V(D)CA-28"	Stainless Steel	14	X(Axial)
H10S -2ACEL-11B	202-11B-RRA-14Y	2	18W202	2RACEL11B-T	Recirc "A" / BB	FSK-P-169	BB-012-V(D)CA-28"	Stainless Steel	14	Y(Vert)
H10S -2ACEL-11C	202-11C-RRA-14Z	3	18W202	2RACEL11C-T	Recirc "A" / BB	FSK-P-169	BB-012-V(D)CA-28"	Stainless Steel	14	Z(Lat)
H10S -2ACEL-12A	202-12A-RRB-13X	4	18W202	2RACEL12A-T	Recirc "B" / BB	FSK-P-170	BB-011-V(D)CA-28"	Stainless Steel	13	X(Axial)
H10S -2ACEL-12B	202-12B-RRB-13Y	5	18W202	2RACEL12B-T	Recirc "B" / BB	FSK-P-170	BB-011-V(D)CA-28"	Stainless Steel	13	Y(Vert)
H10S -2ACEL-12C	202-12C-RRB-13Z	6	18W202	2RACEL12C-T	Recirc "B" / BB	FSK-P-170	BB-011-V(D)CA-28"	Stainless Steel	13	Z(Lat)
H10S -2ACEL-13A	200-13A-MSA-81X	7	1CW200	2RACEL13A-T	Main Steam A/AB	FSK-P-214	AB-030-V(DLA)-26"	Carbon Steel	81	X(Lat)
H10S -2ACEL-13B	200-13B-MSA-81Y	8	1CW200	2RACEL13B-T	Main Steam A/AB	FSK-P-214	AB-030-V(D)LA-26"	Carbon Steel	81	Y (Vert)
H10S -2ACEL-14A	200-14A-MSB-534X	9	1CW200	2RACEL14A-T	Main Steam B/AB	FSK-P-214	AB-031-V(D)LA-26"	Carbon Steel	534	X(Lat)
H10S -2ACEL-14B	200-14B-MSB-534Y	10	1CW200	2RACEL14B-T	Main Steam B/AB	FSK-P-214	AB-031-V(D)LA-26"	Carbon Steel	534	Y (Vert)
H10S -2ACEL-15A	200-15A-MSA-22JX	11	1CW200	2RACEL15A-T	Main Steam A(SRV-J)/AB	1-P-AB-08	AB-061-GBC-10"	Carbon Steel	22J	X (Lat)
H10S -2ACEL-15B	200-15B-MSA-22JZ	12	1CW200	2RACEL15B-T	Main Steam A(SRV-J)/AB	1-P-AB-08	AB-061-GBC-10"	Carbon Steel	22J	Z (Lat)
H10S -2ACEL-16A	200-16A-MSB-40PX	13	1CW200	2RACEL16A-T	Main Steam B(SRV-P)/AB	1-P-AB-09	AB-065-GBC-10"	Carbon Steel	40P	X(Axial)
H10S -2ACEL-16B	200-16B-MSB-40PY	14	1CW200	2RACEL16B-T	Main Steam B(SRV-P)/AB	1-P-AB-09	AB-065-GBC-10"	Carbon Steel	40P	Y(Vert)
H10S -2ACEL-16C	200-16C-MSB-40PZ	15	1CW200	2RACEL16C-T	Main Steam B(SRV-P)/AB	1-P-AB-09	AB-065-GBC-10"	Carbon Steel	40P	Z(Lat)
H10S -2ACEL-17A	200-17A-MSA-430Y	16	1CW200	2RACEL17A-T	Main Steam A (RCIC) / FC	1-P-FC-01	FC-003-DBA-4"	Carbon Steel	430	Y (Vert)
H10S -2ACEL-17B	200-17B-MSA-430Z	17	1CW200	2RACEL17B-T	Main Steam A (RCIC) / FC	1-P-FC-01	FC-003-DBA-4"	Carbon Steel	430	Z (Lat)
H10S -2ACEL-18A	202-18A-RHRA-602X	18	18W202	2RACEL18A-T	Recirc "A" (RHR) / BB	1-P-BC-02	BC-116-CCA-12"	Stainless Steel	602	X(Axial)
H10S -2ACEL-18B	202-18B-RHRA-602Y	19	18W202	2RACEL18B-T	Recirc "A" (RHR) / BB	1-P-BC-02	BC-116-CCA-12"	Stainless Steel	602	Y(Vert)
H10S -2ACEL-18C	202-18C-RHRA-602Z	20	18W202	2RACEL18C-T	Recirc "A" (RHR) / BB	1-P-BC-02	BC-116-CCA-12"	Stainless Steel	602	Z(Lat)
H10S -2ACEL-19A	202-19A-RHRB-515NX	21	18W202	2RACEL19A-T	Recirc "B" (RHR) / BB	1-P-BC-02	BC-010-DLA-20"	Carbon Steel	515N	X(Axial)
H10S -2ACEL-19B	202-19B-RHRB-515NY	22	18W202	2RACEL19B-T	Recirc "B" (RHR) / BB	1-P-BC-02	BC-010-DLA-20"	Carbon Steel	515N	Y(Vert)
H10S -2ACEL-19C	202-19C-RHRB-515NZ	23	18W202	2RACEL19C-T	Recirc "B" (RHR) / BB	1-P-BC-02	BC-010-DLA-20"	Carbon Steel	515N	Z(Lat)
H10S -2ACEL-20A	200-20A-MSA-14X	24	1CW200	2RACEL20A-T	Main Steam A/AB	FSK-P-214	AB-030-V(D)LA-26"	Carbon Steel	14	X(Lat)
H10S -2ACEL-20B	200-20B-MSA-14Z	25	1CW200	2RACEL20B-T	Main Steam A/AB	FSK-P-214	AB-030-V(D)LA-26"	Carbon Steel	14	Z(Lat)
H10S -2ACEL-21A	200-21A-MSB-490Y	26	1CW200	2RACEL21A-T	Main Steam B/AB	FSK-P-214	AB-031-V(D)LA-26"	Carbon Steel	490	Y (Vert)
H10S -2ACEL-21B	200-21B-MSB-490Z	27	1CW200	2RACEL21B-T	Main Steam B/AB	FSK-P-214	AB-031-V(D)LA-26"	Carbon Steel	490	Z (Axial)
H10S -2ACEL-22A	200-22A-MSB-460X	28	1CW200	2RACEL22A-T	Main Steam B/AB	FSK-P-214	AB-031-V(D)LA-26"	Carbon Steel	460	X (Lat)
H10S -2ACEL-22B	200-22B-MSB-460Y	29	1CW200	2RACEL22B-T	Main Steam B/AB	FSK-P-214	AB-031-V(D)LA-26"	Carbon Steel	460	Y (Vert)
H10S -2ACEL-22C	200-22C-MSB-460Z	30	1CW200	2RACEL22C-T	Main Steam B/AB	FSK-P-214	AB-031-V(D)LA-26"	Carbon Steel	460	Z (Lat)
H10S -2ACEL-23A	202-23A-RRA-323X	31	18W202	2RACEL23A-T	Recirc "A" / BB	FSK-P-169	BB-013-V(D)CA-12"	Stainless Steel	323	X
H10S -2ACEL-23B	202-23B-RRA-323Y	32	18W202	2RACEL23B-T	Recirc "A" / BB	FSK-P-169	BB-013-V(D)CA-12"	Stainless Steel	323	Y
H10S -2ACEL-23C	202-23C-RRA-323Z	33	18W202	2RACEL23C-T	Recirc "A" / BB	FSK-P-169	BB-013-V(D)CA-12"	Stainless Steel	323	Z

Drywell Accelerometers & Proximity Probes

DCP 80062456R3
SUP 22R0
SHT 2

FLDC No.	Channel Name	Channel No	Penetration	Cable No.	System/System Designator	Drawing	Line#	Pipe Material	Node Pt.	Accel Dir.
H10S-2ACEL-24A	202-24A-RRB-323X	34	1BW202	2RACEL24A-T	Recirc "B" / BB	FSK-P-170	BB-014-V(D)CA-12"	Stainless Steel	323	X
H10S-2ACEL-24B	202-24B-RRB-323Y	35	1BW202	2RACEL24B-T	Recirc "B" / BB	FSK-P-170	BB-014-V(D)CA-12"	Stainless Steel	323	Y
H10S-2ACEL-24C	202-24C-RRB-323Z	36	1BW202	2RACEL24C-T	Recirc "B" / BB	FSK-P-170	BB-014-V(D)CA-12"	Stainless Steel	323	Z
H10S-2ACEL-25A	200-25A-FW-50X	18	1CW200	2RACEL25A-T	Feedwater / AE	1-P-AE-04	AE-035-DLA-24"	Carbon Steel	50	X (Lat)
H10S-2ACEL-25B	200-25B-FW-50Y	19	1CW200	2RACEL25B-T	Feedwater / AE	1-P-AE-04	AE-035-DLA-24"	Carbon Steel	50	Y(Vert)
H10S-2ACEL-25C	200-25C-FW-50Z	20	1CW200	2RACEL25C-T	Feedwater / AE	1-P-AE-04	AE-035-DLA-24"	Carbon Steel	50	Z (Axial)
H10S-2ACEL-26A	200-26A-FW-220X	1	1CW200	2RACEL26A-T	Feedwater / AE	1-P-AE-04	AE-035-DLA-12"	Carbon Steel	220	X(Axial)
H10S-2ACEL-26B	200-26B-FW-220Y	2	1CW200	2RACEL26B-T	Feedwater / AE	1-P-AE-04	AE-035-DLA-12"	Carbon Steel	220	Y(Vert)
H10S-2ACEL-27A	200-27A-FW-280X	3	1CW200	2RACEL27A-T	Feedwater / AE	1-P-AE-04	AE-035-DLA-12"	Carbon Steel	280	X(Axial)
H10S-2ACEL-27B	200-27B-FW-280Z	4	1CW200	2RACEL27B-T	Feedwater / AE	1-P-AE-04	AE-035-DLA-12"	Carbon Steel	280	Y(Vert)
H10S-2ACEL-28A	200-28A-FW-160X	5	1CW200	2RACEL28A-T	Feedwater / AE	1-P-AE-04	AE-035-DLA-12"	Carbon Steel	280	X (Lat)
H10S-2ACEL-28B	200-28B-FW-160Y	6	1CW200	2RACEL28B-T	Feedwater / AE	1-P-AE-04	AE-035-DLA-12"	Carbon Steel	280	Y(Vert)
H10S-2ACEL-29A	200-29A-FW-Z002X	21	1CW200	2RACEL29A-T	Feedwater / AE	1-P-AE-04	AE-035-DLA-12"	Carbon Steel	Z002	X(Axial)
H10S-2ACEL-29B	200-29B-FW-Z002Y	22	1CW200	2RACEL29B-T	Feedwater / AE	1-P-AE-04	AE-035-DLA-12"	Carbon Steel	Z002	Y(Vert)
H10S-2ACEL-29C	200-29C-FW-Z002Z	23	1CW200	2RACEL29C-T	Feedwater / AE	1-P-AE-04	AE-035-DLA-12"	Carbon Steel	Z002	Z(Lat)
H10S-2ACEL-30A	202-30A-RRA-110X	7	1BW202	2RACEL30A-T	Recirc "A" / BB	FSK-P-169	BB-013-V(D)CA-22"	Stainless Steel	110	X (Axial)
H10S-2ACEL-30B	202-30B-RRA-110Y	8	1BW202	2RACEL30B-T	Recirc "A" / BB	FSK-P-169	BB-013-V(D)CA-22"	Stainless Steel	110	Y(Vert)
H10S-2ACEL-30C	202-30C-RRA-110Z	9	1BW202	2RACEL30C-T	Recirc "A" / BB	FSK-P-169	BB-013-V(D)CA-22"	Stainless Steel	110	Z(Lat)
H10S-2ACEL-31A	202-31A-RRA-621X	10	1BW202	2RACEL31A-T	Recirc "A" (RHR) / BB	1-P-BC-02	BC-069-DLA-12"	Carbon Steel	621	X (Lat)
H10S-2ACEL-31B	202-31B-RRA-621Y	11	1BW202	2RACEL31B-T	Recirc "A" (RHR) / BB	1-P-BC-02	BC-069-DLA-12"	Carbon Steel	621	Y (Vert)
H10S-2ACEL-31C	202-31C-RRA-621Z	12	1BW202	2RACEL31C-T	Recirc "A" (RHR) / BB	1-P-BC-02	BC-069-DLA-12"	Carbon Steel	621	Z(Axial)
H10S-2ACEL-32A	202-32A-RRA-130X	13	1BW202	2RACEL32A-T	Recirc "A" / BB	1-P-BB-325	BB-226-CCA-1"	Stainless Steel	130	X (Lat)
H10S-2ACEL-32B	202-32B-RRA-130Y	14	1BW202	2RACEL32B-T	Recirc "A" / BB	1-P-BB-325	BB-226-CCA-1"	Stainless Steel	130	Y(Vert)
H10S-2ACEL-32C	202-32C-RRA-130Z	15	1BW202	2RACEL32C-T	Recirc "A" / BB	1-P-BB-325	BB-226-CCA-1"	Stainless Steel	130	Z (Axial)
H10S-2ACEL-33A	202-33A-RRA-97X	16	1BW202	2RACEL33A-T	Recirc "A" (RHR) / BB	1-P-BC-319	BC-121-DBA-1"	Carbon Steel	97	X (Axial)
H10S-2ACEL-33B	202-33B-RRA-97Z	17	1BW202	2RACEL33B-T	Recirc "A" (RHR) / BB	1-P-BC-319	BC-121-DBA-1"	Carbon Steel	97	Z (Lat)
H10S-2ACEL-34A	202-34A-RHRB-603X	28	1BW202	2RACEL34A-T	Recirc "B" (RHR) / BB	1-P-BC-02	BC-015-CCA-12"	Stainless Steel	603F	X (Axial)
H10S-2ACEL-34B	202-34B-RHRB-603Y	29	1BW202	2RACEL34B-T	Recirc "B" (RHR) / BB	1-P-BC-02	BC-015-CCA-12"	Stainless Steel	603F	Y (Vert)
H10S-2ACEL-34C	202-34C-RHRB-603Z	30	1BW202	2RACEL34C-T	Recirc "B" (RHR) / BB	1-P-BC-02	BC-015-CCA-12"	Stainless Steel	603F	Z (Lat)
H10S-2ACEL-35A	202-35A-RRB-110X	37	1BW202	2RACEL35A-T	Recirc "B" / BB	FSK-P-170	BB-014-V(D)CA-22"	Stainless Steel	110	X (Axial)
H10S-2ACEL-35B	202-35B-RRB-110Y	38	1BW202	2RACEL35B-T	Recirc "B" / BB	FSK-P-170	BB-014-V(D)CA-22"	Stainless Steel	110	Y (Vert)
H10S-2ACEL-35C	202-35C-RRB-110Z	39	1BW202	2RACEL35C-T	Recirc "B" / BB	FSK-P-170	BB-014-V(D)CA-22"	Stainless Steel	110	Z (Lat)

Drywell Accelerometers & Proximity Probes

DCP 80062466R3
SUP 22R0
SHT 3

FLOC No.	Channel Name	Channel No	Penetration	Cable No.	System/System Designator	Drawing	Lines	Pipe Material	Node Pt.	Accel Dir.
H10S -2ACEL-36A	202-36A-RRB-614X	40	1BW202	2RACEL36A-T	Recirc "B" (RHR) / BB	1-P-BC-02	BC-021-DLA-12"	Carbon Steel	614	X (Lat)
H10S -2ACEL-36B	202-36B-RRB-614Y	41	1BW202	2RACEL36B-T	Recirc "B" (RHR) / BB	1-P-BC-02	BC-021-DLA-12"	Carbon Steel	614	Y (Vert)
H10S -2ACEL-36C	202-36C-RRB-614Z	42	1BW202	2RACEL36C-T	Recirc "B" (RHR) / BB	1-P-BC-02	BC-021-DLA-12"	Carbon Steel	614	Z (Axial)
H10S -2ACEL-37A	202-37A-FO60B-LSX	50	1BW202	2RACEL37A-T	Recirc "B" (RHR) / BB	1-P-BC-02				LSX (Lat)
H10S -2ACEL-37B	202-37B-FO60B-LSY	51	1BW202	2RACEL37B-T	Recirc "B" (RHR) / BB	1-P-BC-02				LSY (Vert)
H10S -2ACEL-37C	202-37C-FO60B-LSZ	52	1BW202	2RACEL37C-T	Recirc "B" (RHR) / BB	1-P-BC-02				LSZ (Axial)
		43	1BW202							
		44	1BW202							
		45	1BW202							
H10S -2ACEL-39A	202-39A-RRB-160X	46	1BW202	2RACEL39A-T	Recirc "B" / BB	1-P-BB-327	BB-224-CCA-1"	Stainless Steel	155/160	X(Lat)
H10S -2ACEL-39B	202-39B-RRB-160Y	47	1BW202	2RACEL39B-T	Recirc "B" / BB	1-P-BB-327	BB-224-CCA-1"	Stainless Steel	155/160	Y (Vert)
H10S -2ACEL-40A	202-40A-RHRB-196Y	48	1BW202	2RACEL40A-T	Recirc "B" (RHR) / BB	1-P-BC-316	BC-196-DBA-1"	Carbon Steel	196	Y (Vert)
H10S -2ACEL-40B	202-40B-RHRB-196Z	49	1BW202	2RACEL40B-T	Recirc "B" (RHR) / BB	1-P-BC-316	BC-196-DBA-1"	Carbon Steel	196	Z (Lat)
H10S -2ACEL-41A	202-41A-RRB-M1	57	1BW202	2RACEL41A-T	Recirc "B" / BB MOTOR	N/A	N/A	N/A		M1
H10S -2ACEL-41B	202-41B-RRB-M2	58	1BW202	2RACEL41B-T	Recirc "B" / BB MOTOR	N/A	N/A	N/A		M2
H10S -2ACEL-41C	202-41C-RRB-M3	59	1BW202	2RACEL41C-T	Recirc "B" / BB MOTOR	N/A	N/A	N/A		M3 (Vert)
H10S -2ACEL-41D	202-41D-RRB-M4	60	1BW202	2RACEL41D-T	Recirc "B" / BB MOTOR	N/A	N/A	N/A		M4
H10S -2ACEL-41E	202-41E-RRB-M5	61	1BW202	2RACEL41E-T	Recirc "B" / BB MOTOR	N/A	N/A	N/A		M5
H10S -2ACEL-42A	202-42A-FO60A-706X	24	1BW202	2RACEL42A-T	Recirc "A" / RHR VALVE	1-P-BC-02	N/A	N/A	706	LSX (Lat)
H10S -2ACEL-42B	202-42B-FO60A-706Y	25	1BW202	2RACEL42B-T	Recirc "A" / RHR VALVE	1-P-BC-02	N/A	N/A	706	LSY (Vert)
H10S -2ACEL-42C	202-42C-FO60A-706Z	26	1BW202	2RACEL42C-T	Recirc "A" / RHR VALVE	1-P-BC-02	N/A	N/A	706	LSZ (Axial)
H10S -2PROB-43A	202-43A-FO60A-PP	27	1BW202	2RACEL43A-T	Recirc "A" / RHR VALVE	1-P-BC-02	N/A	N/A		???
H10S -2ACEL-44A	202-44A-FO77-LSX	53	1BW202	2RACEL44A-T	Recirc "B" / RHR VALVE	1-P-BC-02	N/A	N/A		LSX(Cap)
H10S -2ACEL-44B	202-44B-FO77-LSY	54	1BW202	2RACEL44B-T	Recirc "B" / RHR VALVE	1-P-BC-02	N/A	N/A		LSY(PipeAxial)
H10S -2ACEL-44C	202-44C-FO77-LSZ	55	1BW202	2RACEL44C-T	Recirc "B" / RHR VALVE	1-P-BC-02	N/A	N/A		LSZ(PipeLat)
H10S -2PROB-44D	202-44D-FO77-PP	56	1BW202	2RACEL44D-T	Recirc "B" / RHR VALVE	1-P-BC-02	N/A	N/A		???
H10S -2ACEL-45A	202-45A-FO50A-OPX	62	1BW202	2RACEL45A-T	Recirc "A" / RHR VALVE	1-P-BC-02	N/A	N/A		OPX (Lat)
H10S -2PROB-45B	202-45B-FO60B-PP	63	1BW202	2RACEL45B-T	Recirc "B" / RHR VALVE	1-P-BC-02	N/A	N/A		???
H10S -2ACEL-45C	202-45C-FO50A-OPZ	64	1BW202	2RACEL45C-T	Recirc "A" / RHR VALVE	1-P-BC-02	N/A	N/A		OPZ (Axial)

Turbine Accelerometers
and
Strain Gauges

B0062466R3
SUP 22R0
SHT 4

FLOC No.	Channel Name	Channel No	Penetration	Cable No.	System/System Designator	Drawing	Line#	Pipe Material	Node Pt.	Accel Dir.
H10S-1ACEL-01A	01A-MSA-Z013X	5	N/A	1ACEL-01A	Main Steam "A" / AB	1-P-AB-01	AB-001-DBC-28"	Carbon Steel	Z013	X
H10S-1ACEL-01B	01B-MSA-Z013Y	6	N/A	1ACEL-01B	Main Steam "A" / AB	1-P-AB-01	AB-001-DBC-28"	Carbon Steel	Z013	Y
H10S-1ACEL-02A	02A-MSA-Z018X	7	N/A	1ACEL-02A	Main Steam "A" / AB	1-P-AB-01	AB-001-DBC-28"	Carbon Steel	Z018	X
H10S-1ACEL-02B	02B-MSA-Z018Y	8	N/A	1ACEL-02B	Main Steam "A" / AB	1-P-AB-01	AB-001-DBC-28"	Carbon Steel	Z018	Y
H10S-1ACEL-02C	02C-MSA-Z018Z	9	N/A	1ACEL-02C	Main Steam "A" / AB	1-P-AB-01	AB-001-DBC-28"	Carbon Steel	Z018	Z
H10S-1ACEL-03A	03A-MSB-Z003X	10	N/A	1ACEL-03A	Main Steam "B" / AB	1-P-AB-01	AB-001-DBC-28"	Carbon Steel	Z003	X
H10S-1ACEL-03B	03B-MSB-Z003Y	11	N/A	1ACEL-03B	Main Steam "B" / AB	1-P-AB-01	AB-001-DBC-28"	Carbon Steel	Z003	Y
H10S-1ACEL-04A	04A-MSB-Z008X	12	N/A	1ACEL-04A	Main Steam "B" / AB	1-P-AB-01	AB-001-DBC-28"	Carbon Steel	Z008	X
H10S-1ACEL-04B	04B-MSB-Z008Y	13	N/A	1ACEL-04B	Main Steam "B" / AB	1-P-AB-01	AB-001-DBC-28"	Carbon Steel	Z008	Y
H10S-1ACEL-04C	04C-MSB-Z008Z	14	N/A	1ACEL-04C	Main Steam "B" / AB	1-P-AB-01	AB-001-DBC-28"	Carbon Steel	Z008	Z
H10S-1ACEL-05A	05A-FW-731X	1	N/A	1ACEL-05A	Feedwater / AE	1-P-AE-01	AE-013-DBD-24"	Carbon Steel	731	X
H10S-1ACEL-05B	05B-FW-731Y	2	N/A	1ACEL-05B	Feedwater / AE	1-P-AE-01	AE-013-DBD-24"	Carbon Steel	731	Y
H10S-1ACEL-06A	06A-FW-817Y	3	N/A	1ACEL-06A	Feedwater / AE	1-P-AE-01	AE-013-DBD-24"	Carbon Steel	817	Y
H10S-1ACEL-06B	06B-FW-817Z	4	N/A	1ACEL-06B	Feedwater / AE	1-P-AE-01	AE-013-DBD-24"	Carbon Steel	817	Z
H10S-1ACEL-07A	07A-ES-49X	15	N/A	1ACEL-07A	Extraction Stm(FWHTR6A)/AC	1-P-AC-01	AF-065-GFD-14"	Carbon Steel	46	X
H10S-1ACEL-07B	07B-ES-49Y	16	N/A	1ACEL-07B	Extraction Stm(FWHTR6A)/AC	1-P-AC-01	AF-065-GFD-14"	Carbon Steel	46	Y
H10S-1ACEL-08A	08A-ES-Z010X	17	N/A	1ACEL-08A	Extraction Stm(FWHTR6B)/AC	1-P-AC-01	AF-065-GFD-14"	Carbon Steel	Z010	X
H10S-1ACEL-08B	08B-ES-Z010Y	18	N/A	1ACEL-08B	Extraction Stm(FWHTR6B)/AC	1-P-AC-01	AF-065-GFD-14"	Carbon Steel	Z010	Y
H10S-1ACEL-08C	08C-ES-Z010Z	19	N/A	1ACEL-08C	Extraction Stm(FWHTR6B)/AC	1-P-AC-01	AF-065-GFD-14"	Carbon Steel	Z010	Z
H10S-1ACEL-09A	09A-ES-230GX	20	N/A	1ACEL-09A	Extraction Stm(FWHTR6B)/AC	1-P-AC-01	AF-065-GFD-14"	Carbon Steel	230G	X
H10S-1ACEL-09B	09B-ES-230GY	21	N/A	1ACEL-09B	Extraction Stm(FWHTR6B)/AC	1-P-AC-01	AF-065-GFD-14"	Carbon Steel	230G	Y
H10S-1ACEL-10A	10A-ES-Z008X	22	N/A	1ACEL-10A	Extraction Stm(FWHTR6B)/AC	1-P-AC-01	AF-065-GFD-14"	Carbon Steel	471	X
H10S-1ACEL-10B	10B-ES-Z008Y	23	N/A	1ACEL-10B	Extraction Stm(FWHTR6B)/AC	1-P-AC-01	AF-065-GFD-14"	Carbon Steel	471	Y
H10S-1ACEL-10C	10C-ES-Z008Z	24	N/A	1ACEL-10C	Extraction Stm(FWHTR6B)/AC	1-P-AC-01	AF-065-GFD-14"	Carbon Steel	471	Z

Turbine Accelerometers
and
Strain Gauges

80062466R3
SUP 22R0
SHT 5 of 5

FLOC No.	Channel Name	Channel No	Penetration	Cable No.	System/System Designator	Drawing	Line#	Pipe Material	Node Pt.	Accel Dir.
H10S -1STGA-A01A	STGA-A01-233	25	N/A	1STGA-01A	Main Steam "A" / AB	1-P-AB-01	AB-001-DBC-28"	Carbon Steel	233/234	X (Radial)
H10S -1STGA-A01B	STGA-A01-233	25	N/A	1STGA-01B	Main Steam "A" / AB	1-P-AB-01	AB-001-DBC-28"	Carbon Steel	233/234	X (Radial)
H10S -1STGA-A02A	STGA-A02-237	26	N/A	1STGA-01C	Main Steam "A" / AB	1-P-AB-01	AB-001-DBC-28"	Carbon Steel	237/238	X (Radial)
H10S -1STGA-A02B	STGA-A02-237	26	N/A	1STGA-01D	Main Steam "A" / AB	1-P-AB-01	AB-001-DBC-28"	Carbon Steel	237/238	X (Radial)
H10S -1STGA-A03A	STGA-A03-233L	27	N/A	1STGA-01E	Main Steam "A" / AB	1-P-AB-01	AB-001-DBC-28"	Carbon Steel	233/234	Z (Long)
H10S -1STGA-A03B	STGA-A03-233L	27	N/A	1STGA-01F	Main Steam "B" / AB	1-P-AB-01	AB-001-DBC-28"	Carbon Steel	233/234	Z (Long)
H10S -1STGA-B01A	STGA-B01-62	28	N/A	1STGA-02A	Main Steam "B" / AB	1-P-AB-01	AB-001-DBC-28"	Carbon Steel	62/64	X (Radial)
H10S -1STGA-B01B	STGA-B01-62	28	N/A	1STGA-02B	Main Steam "B" / AB	1-P-AB-01	AB-001-DBC-28"	Carbon Steel	62/64	X (Radial)
H10S -1STGA-B02A	STGA-B02-237	29	N/A	1STGA-02C	Main Steam "B" / AB	1-P-AB-01	AB-001-DBC-28"	Carbon Steel	67/68	X (Radial)
H10S -1STGA-B02B	STGA-B02-237	29	N/A	1STGA-02D	Main Steam "B" / AB	1-P-AB-01	AB-001-DBC-28"	Carbon Steel	67/68	X (Radial)
H10S -1STGA-B03A	STGA-B03-62L	30	N/A	1STGA-02E	Main Steam "B" / AB	1-P-AB-01	AB-001-DBC-28"	Carbon Steel	62/64	Z (Long)
H10S -1STGA-B03B	STGA-B03-62L	30	N/A	1STGA-02F	Main Steam "B" / AB	1-P-AB-01	AB-001-DBC-28"	Carbon Steel	62/64	Z (Long)
H10S -1STGA-C01A	STGA-C01-582	31	N/A	1STGA-03A	Main Steam "C" / AB	1-P-AB-01	AB-001-DBC-28"	Carbon Steel	582/584	X (Radial)
H10S -1STGA-C01B	STGA-C01-582	31	N/A	1STGA-03B	Main Steam "C" / AB	1-P-AB-01	AB-001-DBC-28"	Carbon Steel	582/584	X (Radial)
H10S -1STGA-C02A	STGA-C02-587	32	N/A	1STGA-03C	Main Steam "C" / AB	1-P-AB-01	AB-001-DBC-28"	Carbon Steel	587/588	X (Radial)
H10S -1STGA-C02B	STGA-C02-587	32	N/A	1STGA-03D	Main Steam "C" / AB	1-P-AB-01	AB-001-DBC-28"	Carbon Steel	587/588	X (Radial)
H10S -1STGA-C01A	STGA-D01-402	33	N/A	1STGA-04A	Main Steam "D" / AB	1-P-AB-01	AB-001-DBC-28"	Carbon Steel	402/404	X (Radial)
H10S -1STGA-C01B	STGA-D01-402	33	N/A	1STGA-04B	Main Steam "D" / AB	1-P-AB-01	AB-001-DBC-28"	Carbon Steel	402/404	X (Radial)
H10S -1STGA-C02A	STGA-D02-407	34	N/A	1STGA-04C	Main Steam "D" / AB	1-P-AB-01	AB-001-DBC-28"	Carbon Steel	407/408	X (Radial)
H10S -1STGA-C02B	STGA-D02-407	34	N/A	1STGA-04D	Main Steam "D" / AB	1-P-AB-01	AB-001-DBC-28"	Carbon Steel	407/408	X (Radial)

FORM-2
UFSAR CHANGE NOTICE

Change Notice Number: HCN 04-060

PART I: INITIATION (By Sponsor)

A. IDENTIFICATION:

Sponsor (printed name) Philip M. Stashak Department Civil/Stress Station/Unit No HC

B. SHORT DESCRIPTION:

Vibration of Drywell piping and components will require the use of two digital acquisitions systems (DAS) that will be installed in reactor building rooms 4303 and 4310.The DAS's located in rooms 4303 and 4310 (Reactor Building) consist of metal consoles, (non combustibles) and combustibles which include; desktop computers, data acquisition hardware components, and an assumed amount of paper, pencils, and nearby reference materials. A review of the Fire Hazards Analysis performed for DCP 4EC-3186 (installed vibration monitoring equipment and DAS to measure recirc vibration) shows that the weight assumptions for combustibles are applicable for this installation. Therefore, it is assumed that the equipment will add approximately 50 pounds of combustible plastic to the room. It is also assumed that paper, pencils, and reference materials will add an additional 25 pounds of combustible material to the room. This correlates to an additional heat load of 1.1 E6 Btus (Fire Load) added to rooms 4303 (Fire Area RB2) and (Fire Area RB1) 4310. The weight of combustible commodities and the fire loads will be updated in Table 9A-1 " Fire Hazards Analysis Summary" (sheet 29), Table 9A-8 " Fire Hazards Analysis Tabulation Summary" (sheet 17), and Table 9A-9 "Fire Hazards Analysis Tabulation" (sheet 17) for the new fire loading in rooms 4303 and 4310 and applicable Fire Areas.

C. AFFECTED PAGES, TABLES AND FIGURES:

Table 9A-1 " Fire Hazards Analysis Summary" (sheet 29)
Table 9A-8 " Fire Hazards Analysis Tabulation Summary" (sheet 17)
Table 9A-9 "Fire Hazards Analysis Tabulation" (sheet 17)

DCP 80062466R3
SUP23R0
Sht. 1 of 10

FORM-2
UFSAR CHANGE NOTICE

D. JUSTIFICATION FOR CHANGE:

The increase in combustibles due to the values for paper, plastics and cable from the data acquisition system in room 4310 is 1.195E6 BTUs. For the overall affect on the Fire Area RB1 this value is compared to the combustible of 911.7E6 and a Fire Severity of 22 minutes listed in Table 9A-8 sheet 1. The increase in Fire Severity based upon a combustible load increase of 1.195E6 BTUs for Fire Area RB1 is .03 minutes. The localized affect of the increase in combustibles for room 4310 is an increase in the Fire Severity of .5 minutes. The new value is 43.5 minutes compared to the existing value of 43 minutes in Table 9A-8 sheet 17. The increases in combustible loads and the resultant affects on Fire Severity at both the local level (affect on room 4310) and on the overall Fire Area (RB1) are negligible. Installation of the data acquisition in room 4310 is acceptable.

The increase in combustibles due to the values for paper, plastics and cable from the data acquisition system in room 4303 is 1.195E6 BTUs. For the overall affect on the Fire Area RB2 this value is compared to the combustible of 829E6 and a Fire Severity of 23 minutes listed in Table 9A-9 sheet 1. The increase in Fire Severity based upon a combustible load increase of 1.195E6 BTUs for Fire Area RB2 is .03 minutes. The localized affect of the increase in combustibles for room 4303 is an increase in the Fire Severity of .5 minutes. The new value is 53 minutes compared to the existing value of 52.5 minutes in Table 9A-9 sheet 17. The increases in combustible loads and the resultant affects on Fire Severity at both the local level (affect on room 4303) and on the overall Fire Area (RB2) are negligible. Installation of the data acquisition in room 4303 is acceptable.

E. 10CFR 50.59 REVIEW DOCUMENTATION: Refer to NC.NA-AP.ZZ-0059(Q) and NC.NA-AS.ZZ-0059(Q). Complete the applicable NAS-59 form(s) and attach a copy to this form.

F. INITIATION:

Sponsor (signature) Philip M. Stashak Philip M. Stashak Date: 12-9-04

G. CHANGE NOTICE REVIEWS:

1. IF Change Notice is DCP related, THEN Proceed to Section H, Approval
2. IF Change Notice is not DCP related, THEN perform Change Notice Review Checklist, Form 2 Page 2, in accordance with instructions prior to proceeding.

H: APPROVAL:

Sponsor Department Manager, or equivalent (printed name) MEHDI TADJALLI

Department Manager (signature) [illegible] Date 12/17/04

DCP 80062466R3
SUP23R0
Sht. 2

FORM-2
UFSAR CHANGE NOTICE

PART II: REVIEW & APPROVAL (by Licensing)

BASIS: CD Status Installed ☐

NAS-59 Documentation ☐

50.59 Evaluation/SORC ☐

Other:_____

Other: _____

UFSAR Coordinator _____ Date _____

DISPOSITION: UFSAR Revision No. _____ (OR) Rejected Date _____

DCP 80062466R3
SUP23R0
Sht. 3

TABLE 9A-9
FIRE HAZARD ANALYSIS TABULATION

ROOM: Motor Control Center Area FIRE AREA: RB2, Reactor Building Division II

ROOM NO.	4303	BLDG.	Reactor	ELEV.	102

FIRE DETECTION TYPE	FIRE SUPPRESSION TYPE
Ionization	H_2O hose 1ZHR200 Portable extinguishers

MECH SHUTDOWN DIVISION	SAFE SHUTDOWN EQUIPMENT AND CABLE:
II	Channel B MCC, 10B222
II	Channel B conduit and cable tray containing: MCC power, RCIC MCC power, Recirc Pump Trip, RHR, Reactor Vessel Instrumentation, CS, Relief valves PSV-F013 (14 total), Primary Containment Instrument Gas, and RCIC Auto Suction Switchover level switches.

ENERG. LIGHTS: Yes

EFFECTS OF FIRE ON SAFE SHUTDOWN AND/OR RADIOACTIVE RELEASE:
None. Redundant Division I equipment will be used for safe shutdown.

DEVIATION REQUEST: None

CONSTRUCTION:	FIRE RATING
Walls:	
North	3 hour / 2 hour / unrated
East	3 hour
South	unrated
West	unrated
Floor:	unrated
Ceiling:	unrated
Doors And Hatches:	unrated

Pressure tight door in West wall

Pressure tight equip. access panel to 4323

Reference Drawings

Elec. Drawings E-1533, E-1563, E 1593

Fire Drawings Fig. 9.5-3 and 9.5-9

COMBUSTIBLES: MATERIAL:	QUANTITY	EQUIV. FIRE SEVERITY (MIN)
a. Cable Insulation	~~32,374~~ lbs 32293	52.5
b. Lube Oil		0
c. Other		0
d. Transient		0
	TOTAL	53 min.

AREA = 2304.5ft^2

DCP 80062466R3
SUP23R0
Sht. 4

TABLE 9A-8
FIRE HAZARD ANALYSIS TABULATION

ROOM: Corridor and Elect. Equip. Area Fire Area: RB1, R.B. Division 1

ROOM NO. 4301 & 4310 BLDG. Reactor ELEV. 102

MECH SHUTDOWN DIVISION	SAFE SHUTDOWN EQUIPMENT AND CABLE:
I	Channel C cable for:SACS C pump, Heat Exchanger Valves; RHR C Pump Motor Cooling; RHR Unit Cooler C and G Valves; Core Spray Unit Cooler C and G valves and Channel C dist. panel, SSW valves for 1N2E201 SACS Hx; HPCI, Primary Containment Inst Gas Ino valves; Suppression Pool level inst.; RHR pump C; Control Area Chilled Water valves to AVH214 and BVH214 SACS Unit Coolers.
I	Channel C MCC 10B232
I	Channel A cable for Recirc Pump Trip
II	Channel D cable for: SACS Valves to Cont Inst Gas Compressor; RCIC; RHR Valves for LPCI Injection, Shutdown Cooling Return, and Head Spray; Main Steam Relief Valves (ADS) PSV F013 A,B,C,D and E
II	Channel B cable for recirc. pump trip.

EFFECTS OF FIRE ON SAFE SHUTDOWN AND/OR RADIOACTIVE RELEASE:

None. Partial coverage by an automatic preaction sprinkler system is provided over the Channel D cable. This cable is only located in the southern end of 4301. The sprinkler system covers all the Channel D cable plus the narrow corridor. There is greater than 120 feet separating Channel C and D which includes areas of negligible combustibles. An early warning Ionization detection system is installed. This combination of automatic suppression, detection, distance and combustible yeilds an equivalent III.G.2.b. separation. Shutdown will be accomplished using Division II equipment

DEVIATION REQUEST: None

FIRE DETECTION TYPE:	FIRE SUPPRESSION TYPE:
Ionization	H_2O hose 1ZHR200 and 1LHR200
Heat actuated	Portable extinguishers
EMERG. LIGHTS:	Auto preaction sprinkler in 4301
Yes	
CONSTRUCTION:	FIRE RATING:
Walls:	
North	3 hour
East	3 hour
South	3 hour ro 4303
West	3 hour to 4315
Floor:	3 hour above 4201
Ceiling:	Unrated, except for 3 hr rated steam tunnel floor section
Doors and Hatches:	

Unrated pressure tight door to airlock 4313
Unrated floor hatches

Reference Drawings:

Elec. Drawings - E-1533, E-1563 and E-1522
E-1512
Fire Drawings Fig. 9.5 3 and 9.5-9

COMBUSTIBLES: MATERIAL:	QUANTITY	EQUIV. FIRE SEVERITY (MIN.)
a. Cable Insulation	~~36,258~~ 36277 lbs	42.1
b. Lube Oil		
c. Other(watch station, wood)	~~[illegible]~~ 300 lbs	1.1
d. Transient		

AREA = 3226 ft^2 TOTAL ~~[illegible]~~ 43.5 min.

DCP 80062466R3
SUP23R0
Sht. 5

TABLE 9A-1 (Cont)

Elev ft-in.	Room	Room Description and Safe Shutdown Equip and Cable	Hazard Material	Hazard Quantity	Fire Load Btu/ft²	Detection	Suppression
077-0	4216	Corridor Div I and II cable	Cable insul	4305 lb	31,200	Ionizat	H_2O hose Port ext
077-0	4217	Vestibule	None	None	None	None	H_2O hose Port ext
077-0	4218	Motor control center area Div I control panel: 1UC005 - Rx level and press Div I cable	Cable insul	10,251 lb	26,300	Ionizat	H_2O hose Port ext
077-0	4219	Safeguard instr rm Div I cable	Cable insul	None	None	Ionizat	H_2O hose Port ext
102-0	4301, 4310	Corridor and Elect equip area Div I MCC 108232 for SACS, SSWS, HPCI, RHR Div I & II cable	Cable insul Watch Station (wood)	~~36,350 lb~~ 36277 600 lb	~~43,780~~ 58070	Ionizat Heat actuated	H_2O hose Port ext Auto pre-action sprinkler sys in 4301
102-0	4303	Motor control center area Div II MCC 108222 for SACS, SSWS, RCIC, RHR, SRV Div II cable	Cable insul	~~32,234 lb~~ 32293	~~75,800~~ 70578	Ionizat	H_2O hose Port ext
102-0	4304, 4305	Personnel airlocks	None	None	None	None	H_2O hose Port ext
102-0	4307	SACS HX and pump rm-Div II Div II SACS pumps 1BP210 1DP210 Div II SACS HX 1B1E201 1B2E201 Div II control panels 1BC201 1DC201 Div II valves-SACS and SSWS Div II unit coolers 1BVE214 1DVE214 Div I & II cable - SACS	Cable insul Lube oil Transient lube oil	9584 lb 4 gal. 4 gal.	10,900	Ionizat	H_2O hose Port ext

DCP 80062466R3
SUP23R0
Sht. 6

1. **Station(s)/Unit(s):** Hope Creek **Affected Document No:** HCN 04-060

2. **Description:**
Provide a brief description, including the reason, of the proposed change (or refer to change package that provides description):

The DAS's located in rooms 4303 and 4310 (Reactor Building) consist of metal consoles, (non combustibles) and combustibles which include; desktop computers, data acquisition hardware components, and an assumed amount of paper, pencils, and nearby reference materials. A review of the Fire Hazards Analysis performed for DCP 4EC-3186 (installed vibration monitoring equipment and DAS to measure recirc vibration) shows that the weight assumptions for combustibles are applicable for this installation. Therefore, it is assumed that the equipment will add approximately 50 pounds of combustible plastic to the room. It is also assumed that paper, pencils, and reference materials will add an additional 25 pounds of combustible material to the room. This correlates to an additional heat load of 1.1 E6 Btus (Fire Load) added to rooms 4303 (Fire Area RB2) and (Fire Area RB1) 4310. The weight of combustible commodities and the fire loads will be updated in Table 9A-1 " Fire Hazards Analysis Summary" (sheet 29), Table 9A-8 " Fire Hazards Analysis Tabulation Summary" (sheet 17), and Table 9A-9 "Fire Hazards Analysis Tabulation" (sheet 17) for the new fire loading in rooms 4303 and 4310 and applicable Fire Areas.

DCP 80062466R3
SUP23R0
Sht. 7

3. **Screening:**
Considering the proposed change, answer the following questions, including a reference to the applicable regulatory, licensing basis, or NFPA document(s), and a brief description of why the proposed change does or does not satisfy the referenced document(s).

A. Does the proposed change **satisfy applicable fire protection regulatory requirements and/or guidance documents** (e.g., GDC 3, 10CFR 50.48 and Appendix R, BTP Appendix A, NUREG 0800, NRC Generic Letters, NFPA Codes, NRC approved NEI Guidance Documents, etc.)?

- [x] Yes
- [ ] No
- [ ] N/A

The revised data in the HCGS Fire Hazards Analysis reflects the plant configuration after installation of the DCP (installation of the Digital Acquisition Systems in rooms 4303 and 4310). NRC Generic Letter 86-10 and Regulatory Guide 1.189 provide guidance on evaluating the affect of a change on the approved Fire Protection Program. The proposed changes to the approved Fire Protection Program satisfy applicable fire protection regulatory requirements/guidance documents.

B. Does the proposed change **satisfy the fire protection licensing basis** (e.g., alternate compliance, exemption, deviation, SER, docketed correspondence, NFPA Codes of Record, etc.)?

- [x] Yes
- [ ] No
- [ ] N/A

The changes revise data in the HCGS Fire Hazards Analysis, as discussed above. Changes to the approved fire protection program at Hope Creek are evaluated for their affect on the program under license conditions 2.C.7. Licensees may make change to their approved Fire Protection Program without prior NRC approval provided that the changes would not adversely affect the ability to achieve and maintain safe shutdown in the event of a fire, and alter specific features of the approved program provided such changes do not otherwise involve a change to the license or technical specification, or require a deviation. The proposed changes to the approved Fire Protection Program satisfy the fire protection licensing basis.

C. Is either question above answered "Yes"?

☒ Yes
☐ No

If yes, then the proposed change does not adversely affect the ability to achieve and maintain safe shutdown in the event of a fire and NRC approval is not required. Check N/A on Step 4 and proceed to Step 5.

If no, then complete Step 4 (See Attachment 4 for additional guidance).

The increase in combustibles due to the values for paper, plastics and cable from the data acquisition system in room 4310 is 1.195E6 BTUs. For the overall affect on the Fire Area RB1 this value is compared to the combustible of 911.7E6 and a Fire Severity of 22 minutes listed in Table 9A-8 sheet 1. The increase in Fire Severity based upon a combustible load increase of 1.195E6 BTUs for Fire Area RB1 is .03 minutes. The localized affect of the increase in combustibles for room 4310 is an increase in the Fire Severity of .5 minutes. The new value is 43.5 minutes compared to the existing value of 43 minutes in Table 9A-8 sheet 17. The increases in combustible loads and the resultant affects on Fire Severity at both the local level (affect on room 4310) and on the overall Fire Area (RB1) are negligible. Installation of the data acquisition in room 4310 is acceptable.

The increase in combustibles due to the values for paper, plastics and cable from the data acquisition system in room 4303 is 1.195E6 BTUs. For the overall affect on the Fire Area RB2 this value is compared to the combustible of 829E6 and a Fire Severity of 23 minutes listed in Table 9A-9 sheet 1. The increase in Fire Severity based upon a combustible load increase of 1.195E6 BTUs for Fire Area RB2 is .03 minutes. The localized affect of the increase in combustibles for room 4303 is an increase in the Fire Severity of .5 minutes. The new value is 53 minutes compared to the existing value of 52.5 minutes in Table 9A-9 sheet 17. The increases in combustible loads and the resultant affects on Fire Severity at both the local level (affect on room 4303) and on the overall Fire Area (RB2) are negligible. Installation of the data acquisition in room 4303 is acceptable.

DCP 80062466R3
SUP23R0
Sht. 9

4. **Evaluation:**
Does the proposed change adversely affect the ability to achieve and maintain safe shutdown in the event of a fire (attach Generic Letter 86-10 type or equivalent evaluation, if applicable)?

- ☐ Yes
- ☒ No
- ☐ N/A

If yes, then the proposed change may not be implemented without prior NRC approval.

If no, then the proposed change does not adversely affect the ability to achieve and maintain safe shutdown in the event of a fire and NRC approval is not required.

5. **Conclusion:**

- ☒ Proposed change may be implemented without prior NRC approval
- ☐ NRC approval is required prior to implementing the proposed change

6. I have determined that the documentation is adequate to support the above conclusion.

	Print	Signature	Date
Preparer:	Philip M. Stashak	Philip M. Stashak	12-9-04
Reviewer:	RONNIE J. REYNOLDS	Ronnie J. Reynolds SFPE# 9795	12/17/04

DCP 80062466R3
SUP23R0
Sht.10

3300 XL 8 mm Proximity Transducer System

Patents: 5,016,343; 5,126,664; 5,351,388; 5,685,884

BENTLY Nevada

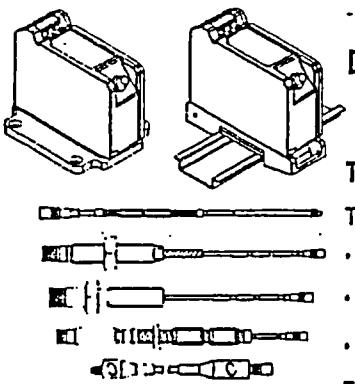

Description

Transducer System

The 3300 XL 8 mm Proximity Transducer System consists of:

- a 3300 XL 8 mm probe
- a 3300 XL extension cable
- a 3300 XL Proximitor® Sensor[1]

The system provides an output voltage directly proportional to the distance between the probe tip and the observed conductive surface. It is capable of both static (position) and dynamic (vibration) measurements, and is primarily used for vibration and position measurement applications on fluid-film bearing machines, as well as Keyphasor® and speed measurement applications[2].

The 3300 XL 8 mm system represents our most advanced performance in an eddy current proximity transducer system. The standard 3300 XL 8 mm system is also 100% compliant with the American Petroleum Institute's (API) 670 Standard (4th Edition) for such transducers. All 3300 XL 8 mm Proximity Transducer Systems achieve this level of performance while allowing complete interchangeability of probe, extension cable, and Proximitor® Sensor without the need for individual component matching or bench calibration.

Each component of the 3300 XL 8 mm Transducer System is backward compatible and interchangeable[3] with other non-XL 3300 series 5 and 8 mm transducer system components[4]. This includes the 3300 5 mm probe, which is used when an 8 mm probe is too large for the available mounting space[5,6].

Proximitor® Sensor

The 3300 XL Proximitor® Sensor incorporates numerous improvements over previous designs. Its physical packaging permits high-density DIN-rail installation. It can also be mounted in a traditional panel mount configuration, where it shares an identical "footprint" to older 4-hole mounted 3300 Proximitor® Sensor. The mounting base for either option provides electrical isolation, eliminating the need for separate isolator plates. The 3300 XL Proximitor® Sensor is highly immune to radio frequency interference, allowing installation in fiberglass housings without adverse effects from nearby radio frequency signals. Improved RFI/EMI immunity allows the 3300 XL Proximitor® Sensor to achieve European CE mark approvals without requiring special shielded conduit or metallic housings, resulting in lower installation costs and complexity.

CE NRTL/C Ex

The 3300 XL's SpringLoc terminal strips require no special installation tools and facilitate faster, more robust field wiring connections by eliminating screw-type clamping mechanisms that can loosen.

Proximity Probe and Extension Cable

The 3300 XL probe and extension cable also reflect improvements over previous designs. A patented TipLoc™ molding method provides a more robust bond between the probe tip and the probe body. The probe's cable is more securely attached as well, incorporating a patented CableLoc™ design that provides 330 N (75 lbf) pull strength where the probe cable attaches to the probe tip.

3300 XL 8 mm Probes and Extension Cables can also be ordered with an optional FluidLoc® cable option. This option prevents oil and other liquids from leaking out of the machine through the cable's interior.

Connectors

The 3300 XL probe, extension cable, and Proximitor® Sensor have corrosion-resistant, gold-plated ClickLoc™ connectors. These connectors require only finger-light torque (connectors will "click"), and the specially engineered locking mechanism prevents the connectors from loosening. They do not require any special tools for installation or removal.

3300 XL 8 mm Probes and Extension Cables can also be ordered with connector protectors already installed. Connector protectors can also be supplied separately for installation in the field (such as when the cable must be run through restrictive conduit). Connector protectors are recommended for all installations and provide increased environmental protection[7].

Extended Temperature Range Applications

An Extended Temperature Range (ETR) Probe and Extension Cable are available for applications where either the probe lead or extension cable may exceed the 177 °C (350 °F) temperature specification. The Extended Temperature Range Probe has an extended temperature rating for up to 260 °C (500 °F) for the probe lead and connector. The probe tip must remain below 177 °C (350 °F). The Extended Temperature Range Extension Cable is also rated for up to 260 °C (500 °F). Both the ETR probe and cable are compatible with standard temperature probes and cables. For example, you can utilize an ETR probe with the 330130 extension cable. The ETR system uses the standard 3300 XL Proximitor® Sensor. When using any ETR component as part of your system, the accuracy is limited to the accuracy of the ETR system.

Notes:

1 Proximitor® Sensors are supplied by default from the factory calibrated to AISI 4140 steel. Calibration to other target materials is available upon request.

2 Consult Bently Nevada Applications Note AN085 when considering this transducer system for tachometer or overspeed measurements.

3 3300 XL 8 mm components are both electrically and physically interchangeable with non-XL 3300 5 and 8 mm components. Although the packaging of the 3300 XL Proximitor® Sensor differs from its predecessor, it is designed to fit in the same 4-hole mounting pattern when used with the 4-hole mounting base, and will fit within the same mounting space specifications (when minimum permissible cable bend radius is observed).

4 When XL and non-XL 3300-series 5 and 8 mm system components are mixed, system performance is limited to the specifications for the non-XL 3300 5 and 8 mm Transducer System.

5 The 3300-series 5 mm probe (refer to Specifications and Ordering Information p/n 141605-01) uses smaller physical packaging, but does not permit reduced sideview clearances or tip-to-tip spacing requirements compared to an 8 mm probe. It is used when physical (not electrical) constraints preclude the use of an 8 mm probe. When narrow sideview probes are required, use the 3300 NSv™ Proximity Transducer System (refer to Specifications and Ordering Information p/n 147385-01).

6 8 mm probes provide a thicker encapsulation of the probe coil in the molded PPS plastic probe tip. This results in a more rugged probe. The larger diameter of the probe body also provides a stronger, more robust case. Bently Nevada recommends the use of 8 mm probes when possible to provide optimal robustness against physical abuse.

7 Silicone tape is also provided with each 3300 XL extension cable and can be used instead of connector protectors. Silicone tape is not recommended in applications where the probe-to-extension cable connection will be exposed to turbine oil.

Specifications

Unless otherwise noted, the following specifications are for a 3300 XL 8 mm Proximitor® Sensor, extension cable and 8 mm probe between +18 °C and +27 °C (+64 °F to +80 °F), with a -24 Vdc power supply, a 10 kilo Ω load, an AISI 4140 steel target, and a probe gapped at 1.27 mm (50 mils). Performance characteristics are applicable for systems that consist solely of 3300 XL 8 mm components. The system accuracy and interchangeability specifications do not apply when using a transducer system calibrated to any target other than a Bently Nevada AISI 4140 steel target.

Electrical

Proximitor® Sensor Input: Accepts one noncontacting 3300-series 5 mm, 3300 8 mm or 3300 XL 8 mm Proximity Probe and Extension Cable.

Power: Requires -17.5 Vdc to -26 Vdc without barriers at 12 mA maximum consumption, -23 Vdc to -26 Vdc with barriers. Operation at a more positive voltage than -23.5 Vdc can result in reduced linear range.

Supply Sensitivity: Less than 2 mV change in output voltage per volt change in input voltage.

Output resistance: 50 Ω

Probe dc resistance (nominal) (R_{PROBE}) table:

Probe Length	Resistance from the Center Conductor to the Outer Conductor (R_{PROBE}) (ohms)
0.5	7.45 ± 0.50
1.0	7.59 ± 0.50
1.5	7.73 ± 0.50
2.0	7.88 ± 0.50
5.0	8.73 ± 0.70
9.0	9.87 ± 0.90

Extension cable dc resistance (nominal):

Length of Extension Cable	Resistance from Center Conductor to Center Conductor (R_{CORE}) (ohms)	Resistance from Outer Conductor to Outer Conductor (R_{JACKET}) (ohms)
3.0	0.66 ± 0.10	0.20 ± 0.04
3.5	0.77 ± 0.12	0.23 ± 0.05
4.0	0.88 ± 0.13	0.26 ± 0.05
4.5	0.99 ± 0.15	0.30 ± 0.06
7.0	1.54 ± 0.23	0.46 ± 0.09
7.5	1.65 ± 0.25	0.49 ± 0.10
8.0	1.76 ± 0.26	0.53 ± 0.11
8.5	1.87 ± 0.28	0.56 ± 0.11

Extension cable capacitance: 69.9 pF/m (21.3 pF/ft) typical

Field wiring: 0.2 to 1.5 mm^2 (16 to 24 AWG) [0.25 to 0.75 mm^2 (18 to 23 AWG) with ferrules]. Recommend using three-conductor shielded triad cable. Maximum length of 305 metres (1,000 feet) between the 3300 XL Proximitor® Sensor and the monitor. See the frequency response graphs Figure 10, Figure 11, Figure 12, and Figure 13 for signal rolloff at high frequencies when using longer field wiring lengths.

Linear Range: 2 mm (80 mils). Linear range begins at approximately 0.25 mm (10 mils) from target and is from 0.25 to 2.3 mm (10 to 90 mils) (approximately –1 to –17 Vdc).

Recommended Gap Setting: 1.27 mm (50 mils)

Incremental Scale Factor (ISF)

Standard 5 metre system: 7.87 V/mm (200 mV/mil) ±5% including interchangeability error when measured in increments of 0.25 mm (10 mils) over the 80 mil

linear range from 0 to +45 °C (+32 °F to +113 °F).

Standard 9 metre system: 7.87 V/mm (200 mV/mil) ±6.5% including interchangeability error when measured in increments of 0.25 mm (10 mils) over the 80 mil linear range from 0 to +45 °C (+32 °F to +113 °F).

Extended Temperature Range (ETR) 5 and 9 metre systems: 7.87 V/mm (200 mV/mil) ±6.5% including interchangeability error when measured in increments of 0.25 mm (10 mils) over the 80 mil linear range from 0 to +45 °C (+32 °F to +113 °F).

Deviation from best fit straight line (DSL)

Standard 5 metre system: Less than ±0.025mm (±1 mil) with components at 0 °C to +45 °C (+32 °F to +113 °F).

Standard 9 metre system: Less than ±0.038mm (±1.5 mil) with components at 0 °C to +45 °C (+32 °F to +113 °F).

Extended Temperature Range 5 and 9 metre systems: Less than ±0.038mm (±1.5 mil) with components at 0 °C to +45 °C (+32 °F to +113 °F).

Standard 5 metre system performance over extended temperatures: Over a probe temperature range of -35 °C to +120 °C (-31 °F to +248 °F) with the Proximitor® Sensor and extension cable between 0 °C to +45°C (+32 °F to +113 °F), the ISF remains within ±10% of 7.87 V/mm (200 mV/mil) and the DSL remains within ±0.076 mm (±3 mils).

Over a Proximitor® Sensor and extension cable temperature range of -35 °C to +65 °C (-31 °F to +149 °F) with the probe between 0 °C to +45 °C (+32 °F to +113 °F), the ISF remains within ±10% of 7.87 V/mm (200 mV/mil) and the DSL remains within ±0.076 mm (±3 mils).

Standard 9 metre system performance over extended temperatures: Over a probe temperature range of -35 °C to +120 °C (-31 °F to +248 °F) with the Proximitor® Sensor and extension cable between 0 °C to +45°C (+32 °F to +113 °F), the ISF remains within ±18% of 7.87 V/mm (200 mV/mil) and the DSL remains within ±0.152 mm (±6 mils).

Over a Proximitor® Sensor and extension cable temperature range of -35 °C to +65 °C (-31 °F to +149 °F) with the probe between 0 °C to +45 °C (+32 °F to +113 °F), the ISF remains within ±18% of 7.87 V/mm (200 mV/mil) and the DSL remains within ±0.152 mm (±6 mils).

Extended Temperature Range system performance over extended temperatures: Over a probe and extension cable temperature range of -35 °C to + 260 °C (-31 °F to +500 °F) with the Proximitor® Sensor between 0 °C to +45°C (+32 °F to +113 °F), the ISF remains within ±18% of 7.87 V/mm (200 mV/mil) and the DSL remains within ±0.152 mm (±6 mils).

Frequency Response: 0 to 10 kHz: +0, -3 dB, with up to 305 metres (1000 feet) of field wiring.

Minimum Target Size: 15.2 mm (0.6 in) diameter (flat target)

Shaft Diameter

Minimum: 50.8 mm (2 in)

Recommended minimum: 76.2 mm (3 in)

Measurements on shaft diameters smaller than 50 mm (2 in) usually require close spacing of radial

vibration or axial position transducers with the potential for their electromagnetic emitted fields to interact with one another (cross-talk), resulting in erroneous readings. Care should be taken to maintain minimum separation of transducer tips, generally at least 40 mm (1.6 in) for axial position measurements or 38 mm (1.5 in) for radial vibration measurements. Radial vibration or position measurements on shaft diameters smaller than 76.2 mm (3 in) will generally result in a change in scale factor. Consult Performance Specification 159484 for additional information.

Effects of 60 Hz Magnetic Fields Up to 300 Gauss:				
Output voltage in mil pp/gauss:				
Gap	5 metre Proximitor® Sensor	9 metre Proximitor® Sensor	Probe	Ext. Cable
10 mil	0.0119	0.0247	0.0004	0.0004
50 mil	0.0131	0.0323	0.0014	0.0014
90 mil	0.0133	0.0348	0.0045	0.0045

Electrical Classification:

Complies with the European CE mark.

Hazardous Area Approvals

Note: Multiple approvals for hazardous areas certified by Canadian Standards Association (CSA/NRTL/C) in North America and by Baseefa (2001) in Europe.

North America: Ex ia IIC T5; Class I Zone 0 or Exia IIC T5 for Class 1 Division 1; Groups A, B, C, and D, when installed with intrinsically safe zener barriers per drawing 141092 or when installed with galvanic isolators.

ExnA IIC T5 Classl Zone 2 or ExnA IIC T5 for Class I, Division 2, Groups A, B, C, and D when installed without barriers per drawing 140979.

T_5 @ T_a = -35 °C to +85 °C.

Europe: EExia IIC T5 for Zones 0, 1 and 2, Group IIC, EC certificate number BAS99ATEX1101, when installed with intrinsically safe zener barriers or galvanic isolators.

T5 @ Ta= -35 °C to +85 °C.

EEx nA for Zone 2, Group IIC, EC certificate number BAS99ATEX3100U.

Mechanical

Probe Tip Material: Polyphenylene sulfide (PPS).

Probe Case Material: AISI 304 stainless steel (SST) for forward mount and smooth case probes; AISI 303 SST for reverse mount probes.

Probe Cable Specifications:

Standard cable: 75 Ω triaxial, fluoroethylene propylene (FEP) insulated probe cable in the following total probe lengths: 0.5, 1, 1.5, 2, 5, or 9 metres.

Extended Temperature Range cable: 75 Ω triaxial, perfluoroalkoxy (PFA) insulated probe cable in the following total probe lengths: 0.5, 1, 1.5, 2, 5, or 9 metres.

Extension Cable Material: 75 Ω triaxial, fluoroethylene propylene (FEP) insulated.

Extended Temperature Range (ETR) Extension Cable Material: 75 Ω triaxial, perfluoroalkoxy (PFA) insulated.

Proximitor® Sensor Material: A308 aluminum

System Length: 5 or 9 metres including extension cable

Standard Probe and Extension Cable Armor (optional): Flexible AISI 302 or 304 SST with FEP outer jacket.

Extended Temperature Range Probe and Extension Cable Armor (optional): Flexible AISI 302 or 304 SST with PFA outer jacket.

Tensile Strength (maximum rated): 330 N (75 lbf) probe case to probe lead. 270 N (60 lbf) at probe lead to extension cable connectors.

Connector material: Gold-plated brass or gold-plated beryllium copper.

Probe case torque:	Maximum Rated	Recommended
Standard forward-mounted probes	33.9 N•m (300 in•lbf)	11.2 N•m (100 in•lbf)
Standard forward-mount probes - first three threads	22.6 N•m (200 in•lbf)	7.5 N•m (66 in•lbf)
Reverse mount probes	22.6 N•m (200 in•lbf)	7.5 N•m (66 in•lbf)

Connector-to-connector torque

Recommended torque: see table:

Connector Type	Tightening Instructions
Two 3300 XL gold "click" type connectors	Finger tight
One non-XL stainless steel connector and one 3300 XL connector	Finger tight plus 1/8 turn using pliers

Maximum torque: 0.565 N•m (5 in•lbf)

Minimum Bend Radius: 25.4 mm (1.0 in)

Total System Mass (typical): 0.7 kg (1.5 lbm)

Probe: 323 g (11.38 oz)

Extension Cable: 34 g/m (0.4 oz/ft)

Armored Extension cable: 103 g/m (1.5 oz/ft)

Proximitor® Sensor: 246 g (8.7 oz)

Environmental Limits

Probe Temperature Range

Operating and Storage Temperature:

Standard probe: -51 °C to +177 °C (-60 °F to +351 °F)

Extended Temperature Range probe: -51 °C to +177 °C (-60 °F to +351 °F) for the probe tip; -51 °C to +260 °C (-60 °F to +500 °F) for the probe cable and connector.

Note: Exposing the probe to temperatures below -34 °C (-30 °F) may cause premature failure of the pressure seal.

Extension Cable Temperature Range

Operating and Storage Temperature:

Standard cable: -51 °C to +177 °C (-60 °F to +351 °F)

Extended Temperature Range cable: -51 °C to +260 °C (-60 °F to +500 °F)

Proximitor® Sensor Temperature Range

Operating Temperature: -35 °C to +85 °C (-31 °F to +185 °F)

Storage Temperature: -51 °C to +100 °C (-60 °F to +212 °F)

Relative Humidity: 100% condensing, non-submersible when connectors are protected.

Probe Pressure: 3300 XL 8 mm probes are designed to seal differential pressure between the probe tip and case. The probe sealing material consists of a Viton® O-ring. Probes are not pressure tested prior to shipment. Contact our custom design department if you require a test of the pressure seal for your application.

Note: It is the responsibility of the customer or user to ensure that all liquids and gases are contained and safely controlled should leakage occur from a proximity probe. In addition, solutions with high or low pH values may erode the tip assembly of the probe causing media leakage into surrounding areas. Bently Nevada®, LLC will not be held responsible for any damages resulting from leaking 3300 XL 8 mm proximity probes. In addition, 3300 XL 8 mm proximity probes will not be replaced under the service plan due to probe leakage.

Patents: 5,016,343;

5,126,664;

5,351,388, and

5,685,884.

Components or procedures described in these patents apply to this product.

Ordering Information

3300 XL 8 mm Proximity Probes:

330101 3300 XL 8 mm Probe, 3/8-24 UNF thread, without armor[3]

330102 3300 XL 8 mm Probe, 3/8-24 UNF thread, with armor[3]

Part Number-AXX-BXX-CXX-DXX-EXX

Option Descriptions

A: Unthreaded Length Option:

Note: Unthreaded length must be at least 0.8 inches less than the case length.

Order in increments of 0.1 in

Length configurations:

Maximum unthreaded length: 8.8 in

Minimum unthreaded length: 0.0 in

Example: 0 4 = 0.4 in

B: Overall Case Length Option:

Order in increments of 0.1 in

Threaded length configurations:

Maximum case length: 9.6 in

Minimum case length: 0.8 in

Example: 2 4 = 2.4 in

C: Total Length Option:

0 5	0.5 metre (1.6 feet)
1 0	1.0 metre (3.3 feet)
1 5	1.5 metre (4.9 feet)
2 0	2.0 metres (6.6 feet)
5 0	5.0 metres (16.4 feet)[1]
9 0	9.0 metres (29.5 feet)

D: Connector and Cable-Type Option:

0 0	Connector provided but not installed, standard cable
0 1	Miniature coaxial ClickLoc™ connector with connector protector, standard cable
0 2	Miniature coaxial ClickLoc™ connector, standard cable
1 0	Connector provided but not installed, FluidLoc® cable
1 1	Miniature coaxial ClickLoc™ connector with connector protector, FluidLoc® cable
1 2	Miniature coaxial ClickLoc™ connector, FluidLoc® cable

E: Agency Approval Option:

0 0	Not required
0 5	Multiple Approvals

3300 XL 8 mm Proximity Probes, Metric:

330103 3300 XL 8 mm Probe, M10 x 1 thread, without armor[3]

330104 3300 XL 8 mm Probe, M10 x 1 thread, with armor[3]

Part Number-AXX-BXX-CXX-DXX-EXX

Option Descriptions

A: Unthreaded Length Option:

Note: Unthreaded length must be at least 20 mm less than the case length.

Order in increments of 10 mm.

Length configuration:

Maximum unthreaded length: 230 mm

Minimum unthreaded length: 0 mm

Example: 0 6 = 60 mm

B: Overall Case Length Option:

Order in increments of 10 mm.

Metric thread configurations:

Maximum length: 250 mm

Minimum length: 20 mm

Example: 0 6 = 60 mm

C: Total Length Option:

0 5	0.5 metre (1.6 feet)
1 0	1.0 metre (3.3 feet)
1 5	1.5 metres (4.9 feet)
2 0	2.0 metres (6.6 feet)
5 0	5.0 metres (16.4 feet) [1]
9 0	9.0 metres (29.5 feet)

D: Connector and Cable-Type Option:

0 0	Connector provided but not installed, standard cable
0 1	Miniature coaxial ClickLoc™ connector with connector protector, standard cable
0 2	Miniature coaxial ClickLoc™ connector, standard cable
1 0	Connector provided but not installed, FluidLoc® cable
1 1	Miniature coaxial ClickLoc™ connector with connector protector, FluidLoc® cable
1 2	Miniature coaxial ClickLoc™ connector, FluidLoc® cable

E: Agency Approval Option:

0 0	Not required
0 5	Multiple Approvals

3300 XL 8 mm Reverse Mount Probes

330105-02-12-CXX-DXX-EXX, 3/8-24 UNF threads[3]

330106-05-30-CXX-DXX-EXX, M10 x 1 threads[3]

Option Descriptions

C: Total Length Option:

0 5	0.5 metre (1.6 feet)
1 0	1.0 metre (3.3 feet)
1 5	1.5 metre (4.9 feet)
2 0	2.0 metres (6.6 feet)
5 0	5.0 metres (16.4 feet) [1]
9 0	9.0 metres (29.5 feet)

D: Connector Option:

0 0	Connector provided but not installed
0 2	Miniature ClickLoc™ coaxial connector

E: Agency Approval Option:

0 0	Not required
0 5	Multiple Approvals

3300 XL 8 mm Proximity Probes, Smooth Case:

330140 3300 XL 8 mm Probe without armor[2]

330141 3300 XL 8 mm Probe with armor[2]

Part Number-AXX-BXX-CXX-DXX

Option Descriptions

A: Overall Case Length Option:

Order in increments of 0.1 in

Length configurations:

Maximum length: 9.6 in

Minimum length: 0.8 in

Example: 2 4 = 2.4 in

B: Total Length Option:

0 5	0.5 metre (1.6 feet)
1 0	1.0 metre (3.3 feet)
1 5	1.5 metres (4.9 feet)
2 0	2.0 metres (6.6 feet)
5 0	5.0 metres (16.4 feet) [1]
9 0	9.0 metres (29.5 feet)

C: Connector and Cable-Type Option:

0 0	Connector provided but not installed, standard cable
0 1	Miniature coaxial ClickLoc™ connector with connector protector, standard cable
0 2	Miniature coaxial ClickLoc™ connector, standard cable
1 0	Connector provided but not installed, FluidLoc® cable
1 1	Miniature coaxial ClickLoc™ connector with connector protector, FluidLoc® cable
1 2	Miniature coaxial ClickLoc™ connector, FluidLoc® cable

D: Agency Approval Option:

0 0	Not required
0 5	Multiple Approvals

3300 XL 8 mm Extended Temperature Range (ETR) Proximity Probes:

330191 3300 XL 8 mm ETR Probe, 3/8-24 UNF thread, without armor
330192 3300 XL 8 mm ETR Probe, 3/8-24 UNF thread, with armor
Part Number-AXX-BXX-CXX-DXX
Option Descriptions

A: Unthreaded Length Option:

Note: Unthreaded length must be at least 1.0 inches less than the case length.

Order in increments of 0.5 in

Length configurations:

Maximum unthreaded length: 8.5 in

Minimum unthreaded length: 0.0 in

Example: 1 5 = 1.5 in

B: Overall Case Length Option:

Order in increments of 0.5 in

Threaded length configurations:

Maximum case length: 9.5 in

Minimum case length: 1.0 in

Example: 2 5 = 2.5 in

C: Total Length Option:

0 5	0.5 metre (1.6 feet)
1 0	1.0 metre (3.3 feet)
1 5	1.5 metre (4.9 feet)
2 0	2.0 metres (6.6 feet)
5 0	5.0 metres (16.4 feet)[1]
9 0	9.0 metres (29.5 feet)

D: Agency Approval Option:

0 0	Not required
0 5	Multiple Approvals

3300 XL 8 mm Extended Temperature Range (ETR) Proximity Probes, Metric:

330193 3300 XL 8 mm Probe, M10 x 1 thread, without armor
330194 3300 XL 8 mm Probe, M10 x 1 thread, with armor
Part Number-AXX-BXX-CXX-DXX
Option Descriptions

A: Unthreaded Length Option:

Note: Unthreaded length must be at least 20 mm less than the case length.

Order in increments of 10 mm.

Length configuration:

Maximum unthreaded length: 230 mm

Minimum unthreaded length: 0 mm

Example: 0 6 = 60 mm

B: Overall Case Length Option:

Order in increments of 10 mm.

Metric thread configurations:

Maximum length: 250 mm

Minimum length: 20 mm

Example: 0 6 = 60 mm

C: Total Length Option:

0 5	0.5 metre (1.6 feet)
1 0	1.0 metre (3.3 feet)
1 5	1.5 metres (4.9 feet)
2 0	2.0 metres (6.6 feet)
5 0	5.0 metres (16.4 feet)[1]
9 0	9.0 metres (29.5 feet)

D: Agency Approval Option:

0 0	Not required
0 5	Multiple Approvals

3300 XL 8 mm Extended Temperature Range (ETR) Reverse Mount Probes

330195-02-12-CXX-DXX, 3/8-24 UNF threads
330196-05-30-CXX-DXX, M10 x 1 threads
Option Descriptions

C: Total Length Option:

0 5	0.5 metre (1.6 feet)
1 0	1.0 metre (3.3 feet)
1 5	1.5 metre (4.9 feet)
2 0	2.0 metres (6.6 feet)
5 0	5.0 metres (16.4 feet)[1]
9 0	9.0 metres (29.5 feet)

D: Agency Approval Option:

0 0	Not required
0 5	Multiple Approvals

3300 XL 8 mm Extended Temperature Range (ETR) Proximity Probes, Smooth Case:

330197 3300 XL 8 mm Probe without armor[2]

330198 3300 XL 8 mm Probe with armor[2]

Part Number-AXX-BXX-CXX

Option Descriptions

A: Overall Case Length Option:

Order in increments of 0.5 in

Length configurations:

Maximum length: 9.5 in

Minimum length: 1.0 in

Example: 3 5 = 3.5 in

B: Total Length Option:

0 5	0.5 metre (1.6 feet)
1 0	1.0 metre (3.3 feet)
1 5	1.5 metres (4.9 feet)
2 0	2.0 metres (6.6 feet)
5 0	5.0 metres (16.4 feet) [1]
9 0	9.0 metres (29.5 feet)

C: Agency Approval Option:

0 0	Not required
0 5	Multiple Approvals

3300 XL Proximitor® Sensor

330180-AXX-BXX

Option Descriptions

A: Total Length and Mounting Option:

5 0	5.0 metre (16.4 feet) system length, panel mount
5 1	5.0 metre (16.4 feet) system length, DIN mount
5 2	5.0 metre (16.4 feet) system length, no mounting hardware
9 0	9.0 metres (29.5 feet) system length, panel mount
9 1	9.0 metres (29.5 feet) system length, DIN mount
9 2	9.0 metres (29.5 feet) system length, no mounting hardware

B: Agency Approval Option:

0 0	Not required
0 5	Multiple approvals

3300 XL Extension Cable

330130-AXXX-BXX-CXX

Note: Make sure that the extension cable length and the probe length, when added together, equal the Proximitor® Sensor total length.

Option Descriptions

A: Cable Length Option:

0 3 0	3.0 metres (9.8 feet)
0 3 5	3.5 metres (11.5 feet)
0 4 0	4.0 metres (13.1 feet)
0 4 5	4.5 metres (14.8 feet)
0 7 0	7.0 metres (22.9 feet)
0 7 5	7.5 metres (24.6 feet)
0 8 0	8.0 metres (26.2 feet)
0 8 5	8.5 metres (27.9 feet)

B: Connector Protector and Cable Option:

0 0	Standard cable
0 1	Armored cable
0 2	Standard cable with connector protectors
0 3	Armored cable with connector protectors
1 0	FluidLoc® cable
1 1	Armored FluidLoc® cable
1 2	FluidLoc® cable with connector protectors
1 3	Armored FluidLoc® cable with connector protectors

C: Agency Approval Option:

0 0	Not required
0 5	Multiple Approvals

3300 XL Extended Temperature Range (ETR) Extension Cable

330190-AXXX-BXX-CXX

Note: Make sure that the extension cable length and the probe length, when added together, equal the Proximitor® Sensor total length.

Option Descriptions

A: Cable Length Option:

0 3 0	3.0 metres (9.8 feet)
0 3 5	3.5 metres (11.5 feet)
0 4 0	4.0 metres (13.1 feet)

	0 4 5	4.5 metres (14.8 feet)
	0 7 0	7.0 metres (22.9 feet)
	0 7 5	7.5 metres (24.6 feet)
	0 8 0	8.0 metres (26.2 feet)
	0 8 5	8.5 metres (27.9 feet)
B: Cable Option:	0 0	Standard cable
	0 1	Armored cable
C: Agency Approval Option:	0 0	Not required
	0 5	Multiple Approvals

Accessories

141078-01	Manual
159484	Performance Specification – 3300 XL Proximity Transducer System
162735	Performance Specification – 3300 XL ETR probes and extension cables
02120015	Bulk field wire. 1.0 mm^2 (18 AWG), 3 conductor, twisted, shielded cable with drain wire. Specify length in feet.

137491-AXX

Aluminum probe clamp bracket[2]

Option Descriptions

A: Mounting screw option:	0 1	10-24 UNC-2A mounting screws
	0 2	M5 x 0.8-6g mounting screws

The aluminum clamp bracket is an unthreaded mounting bracket designed to use with the smooth case probes (330140, 330141, 330197 and 330198). After gapping the probe, tighten the clamp bracket by tightening the screws. The mounting screws have pre-drilled holes for safety wire.

137492-AXX

Aluminum probe threaded mounting bracket

Option Descriptions

A: Thread size:	0 1	3/8-24
	0 4	M10 x 1

The aluminum probe threaded mounting bracket is the standard mounting bracket for most 3300 and 3300 XL probe installations. The -01 option is supplied with two 10-24 UNC-2A mounting screws. The -04 option is supplied with two M5 x 0.8-6g mounting screws. The mounting screws have pre-drilled holes for safety wire.

27474-AXX

Phenolic threaded probe mounting bracket

Option Descriptions

A: Thread size:	0 1	3/8-24
	0 4	M10 x 1

The phenolic threaded mounting bracket is recommended if additional electric isolation from the mounting location is required (as in some generator and electrical motor bearing locations). The -01 option is supplied with two 10-24 UNC-2A mounting screws. The -04 option is supplied with two M5 x 0.8-6g mounting screws. The mounting screws have pre-drilled holes for safety wire.

138492-01	Replacement panel-mount mounting pad
138493-01	Replacement DIN-mount mounting pad
148722-01	3300 XL Test Plug. The 3300 XL Test Plug is contains three small test pins attached to three color-coded wires 1 metre in length, each terminated in a banana plug. The three-pin adapter plugs into the test pin holes on 3300 XL-style Proximitor® Sensors. It is used to check the performance of the Proximitor® Sensor from the test pin holes in the terminal strip without requiring the removal of the field wiring.
04310310	3300 XL Proximitor® Sensor Panel-mount Screws. Package includes four 6-32 UNC thread forming mounting screws. (Supplied standard with Proximitor® Housings [3300 XL panel-mount option]).
03200006	Silicone self-fusing tape. A 9.1 metre (10 yard) roll of silicone tape to protect connectors. It is easy to install and provides excellent electrical isolation and protection from the environment. It is not recommended for use inside the casing of the machine.

40113-02	**Connector Protector Kit.** Connector Protector Kit for 3300 XL 8 mm probes and extension cables, including connector protectors and installation tools.
136536-01	**Connector Protector Adapter.** Allows connector protector installation tools manufactured prior to 1998 to be used with 75 Ω ClickLoc™ connectors.
40180-02	**Connector Protectors.** Package contains 10 pairs of connector protectors for 3300 XL 8 mm probes and 3300 XL 5 and 8 mm extension cables.
03839410	**75 ohm Triaxial Male Connector Protector.** Male connector protectors are installed onto the extension cable and attach to the female connector protector on the probe, providing environmental protection of connectors.
03839420	**75 ohm Triaxial Female Connector Protector.** Female connector protectors are installed onto the probe lead and attach to the male connector protector on the extension cable, providing environmental protection of connectors. Also placed on the extension cable to slide over the connection to the Proximitor® Sensor and protect it from the environment.
04301007	**3/8-24 Probe Lock Nut with safety wire holes.** Single probe lock nut with two holes drilled through the nut in order to secure the lock nut in place with safety wire.
04301008	**M10 x 1 Probe Lock Nut with safety wire holes.** Single probe lock nut with two holes drilled through the nut in order to secure the lock nut in place with safety wire.
330153-01	**3300 XL Connector Kit.** Used on 3300 XL 8 mm probes and extension cables. Contains one pair of male and female ClickLoc™ connectors, two color-coded sleeves, two pieces of slit FEP tubing, and one strip of silicone tape.
163356	**Connector Crimp Tool Kit.** Includes one set of multiconnector inserts and connector installation instructions. Compatible only with 330153 connector kits or with probes shipped in 2003 or later with ClickLoc™ connectors uninstalled. Supplied with carrying case.

Notes:

1 Five metre probes are designed for use with the five metre Proximitor® Sensor only.

2 Mounting clamps must be ordered separately for 330140, 330141, 330197, and 330198.

3 For a shorter delivery time, order commonly stocked probes. Currently, stocked probes consist of the following part numbers:

330101-00-08-05-02-00, 330101-00-08-05-02-05, 330101-00-08-10-02-00, 330101-00-08-10-02-05, 330101-00-12-10-02-00, 330101-00-12-10-02-05, 330101-00-16-10-02-00, 330101-00-16-10-02-05, 330101-00-20-05-02-00, 330101-00-20-10-02-00, 330101-00-20-10-02-05, 330101-00-30-10-02-00, 330101-00-30-10-02-05, 330101-00-40-05-02-00, 330101-00-40-10-02-00, 330101-00-40-10-02-05, 330101-00-60-10-02-00, 330101-00-60-10-02-05, 330102-00-20-10-02-00, 330103-00-02-10-02-05, 330103-00-03-10-02-05, 330103-00-04-10-02-00, 330103-00-04-50-02-00, 330103-00-05-10-02-00, 330103-00-06-10-02-00, 330104-00-06-10-02-00, 330104-01-05-50-02-00, 330105-02-12-05-02-00, 330105-02-12-05-02-05, 330105-02-12-10-02-00, 330105-02-12-10-02-05, 330106-05-30-05-02-00, 330106-05-30-05-02-05, 330106-05-30-10-02-00 and 330106-05-30-10-02-05.

© 2003 Bently Nevada, LLC.
CableLoc™, ClickLoc™, FluidLoc®, Keyphasor®, NSv™, Proximitor®, and TipLoc™ are trademarks of Bently Nevada, LLC.
Viton® is a trademark of DuPont.

Graphs and Dimensional Drawings

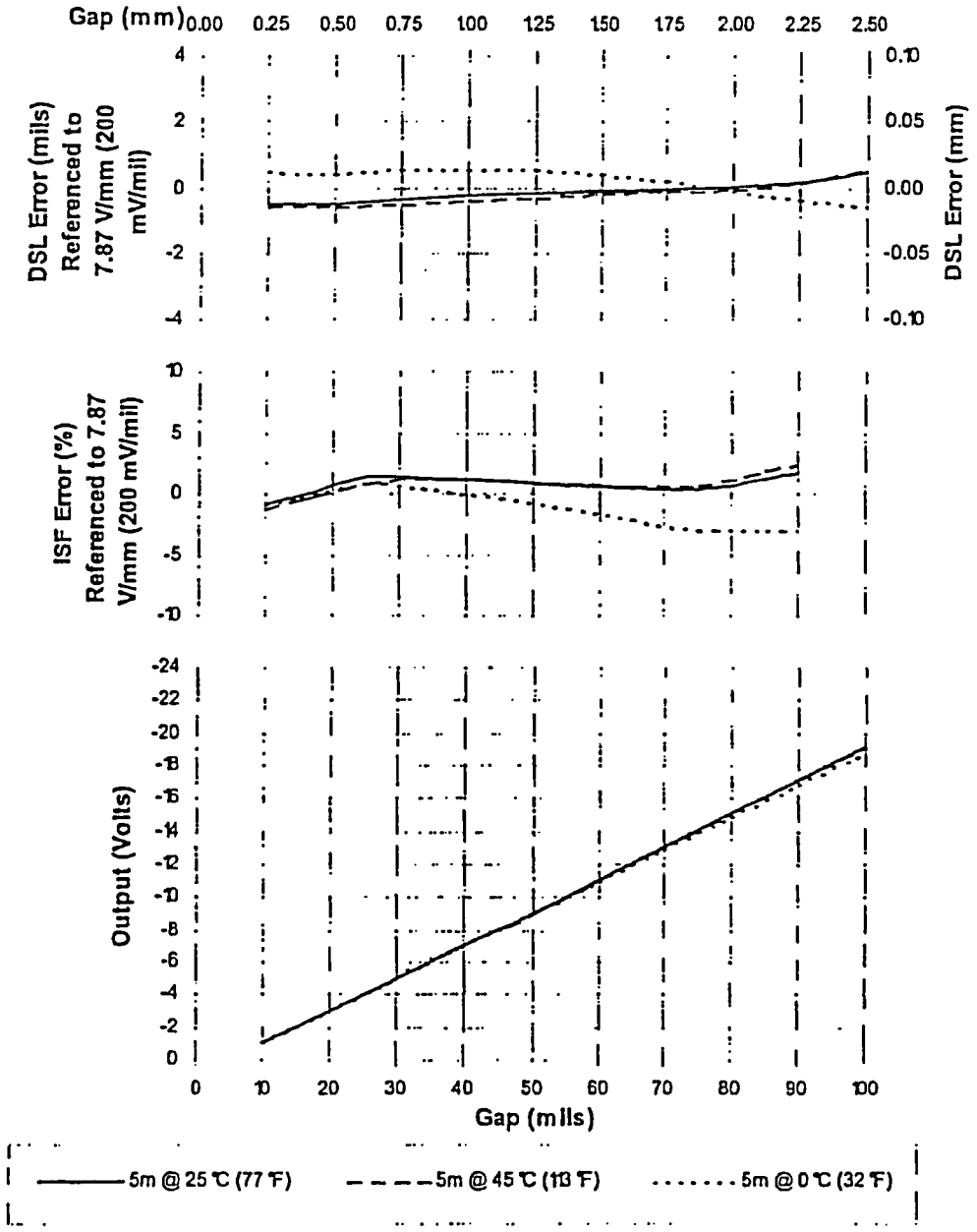

Figure 1 Typical 3300 XL 8 mm 5 m System over API 670 Testing Range

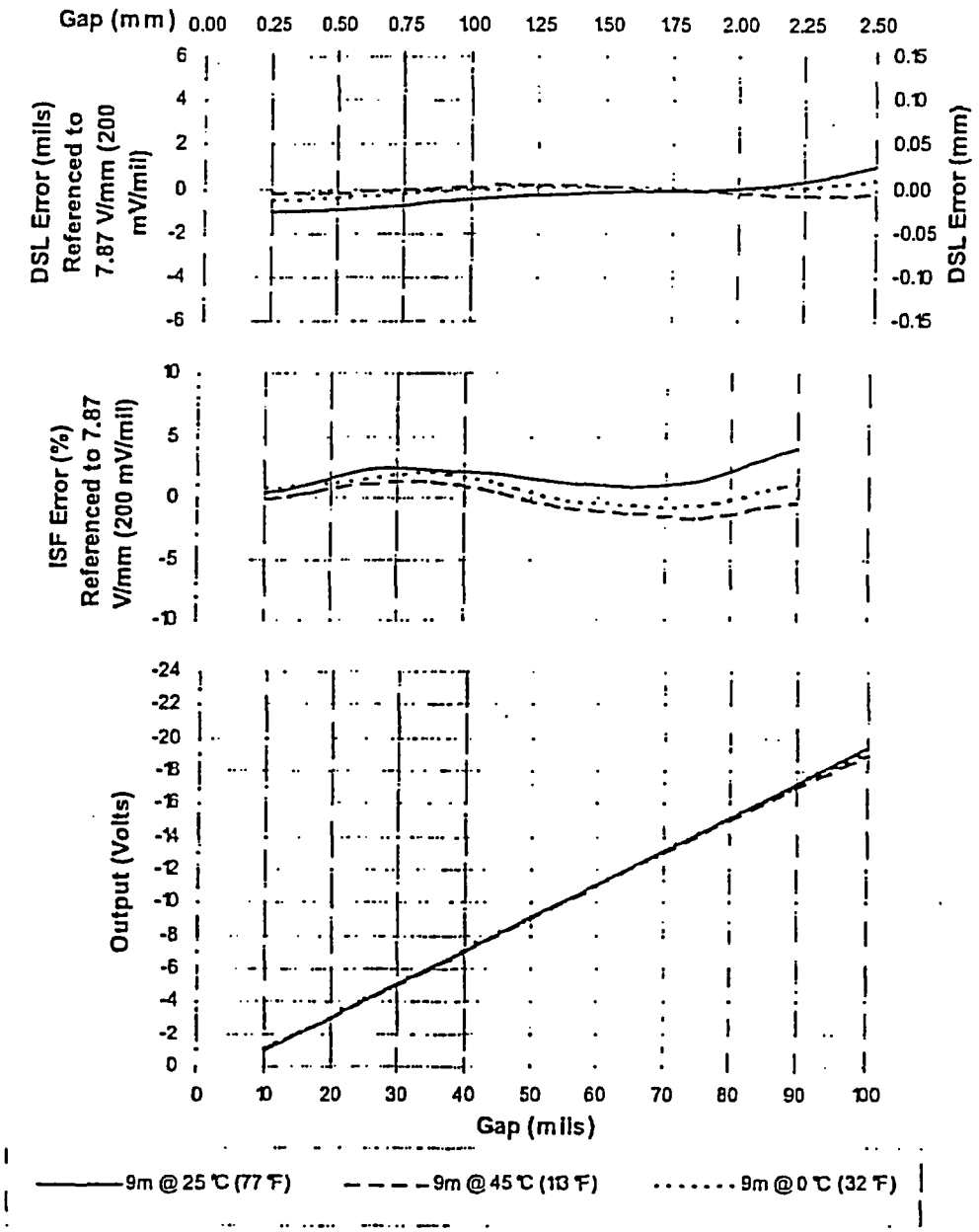

Figure 2 Typical 3300 XL 8 mm 9 m System over API 670 Testing Range

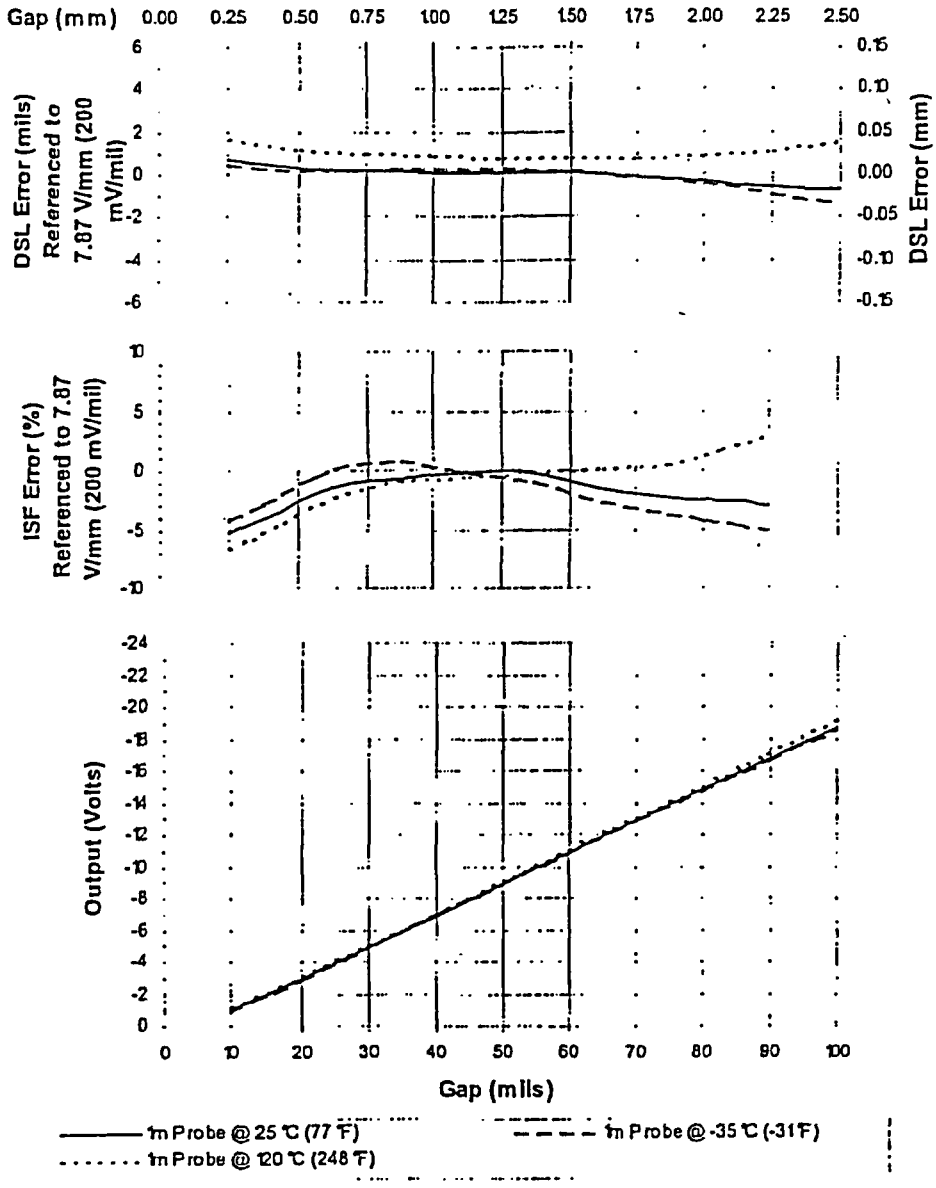

Figure 3 Typical 3300 XL 8 mm Probe over API 670 Operating Range

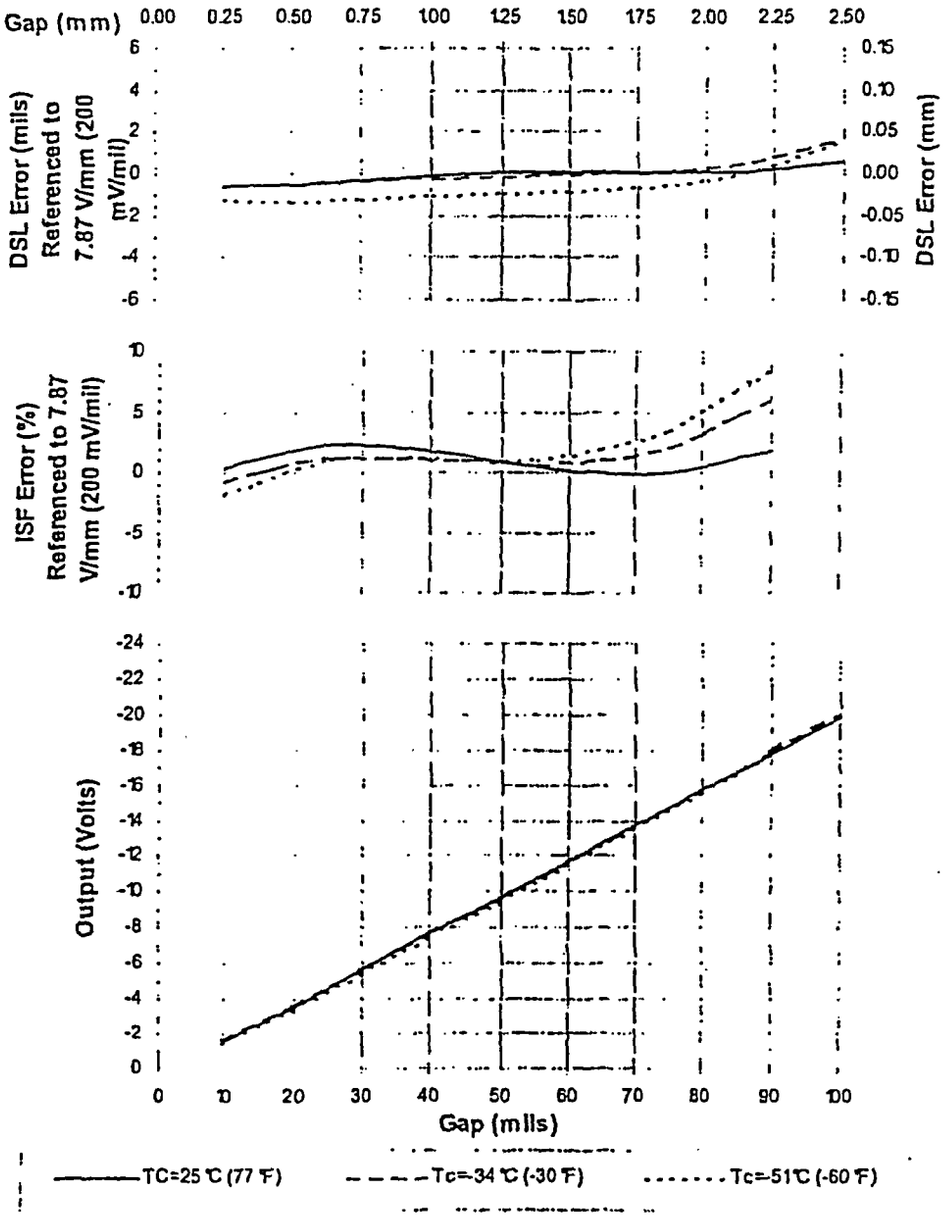

Figure 4 Typical 3300 XL 8 mm 5 m Proximitor® Sensor with 4 m of Extension Cable @ Tc (Probe is at 25 °C)

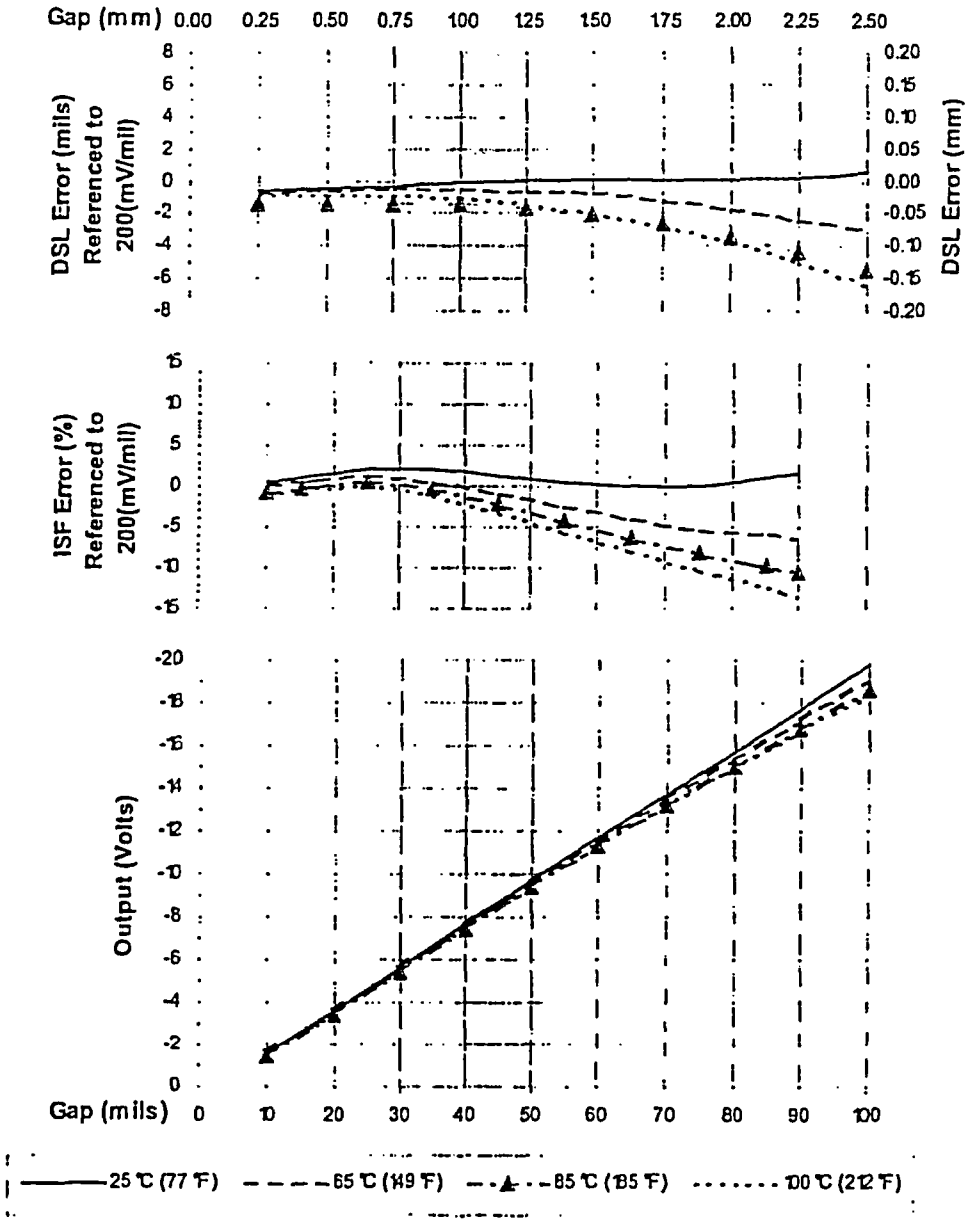

Figure 5 Typical 3300 XL 8 mm 5 m Proximitor® Sensor with 4 m Extension Cable @ Th (Probe is at 25°C)

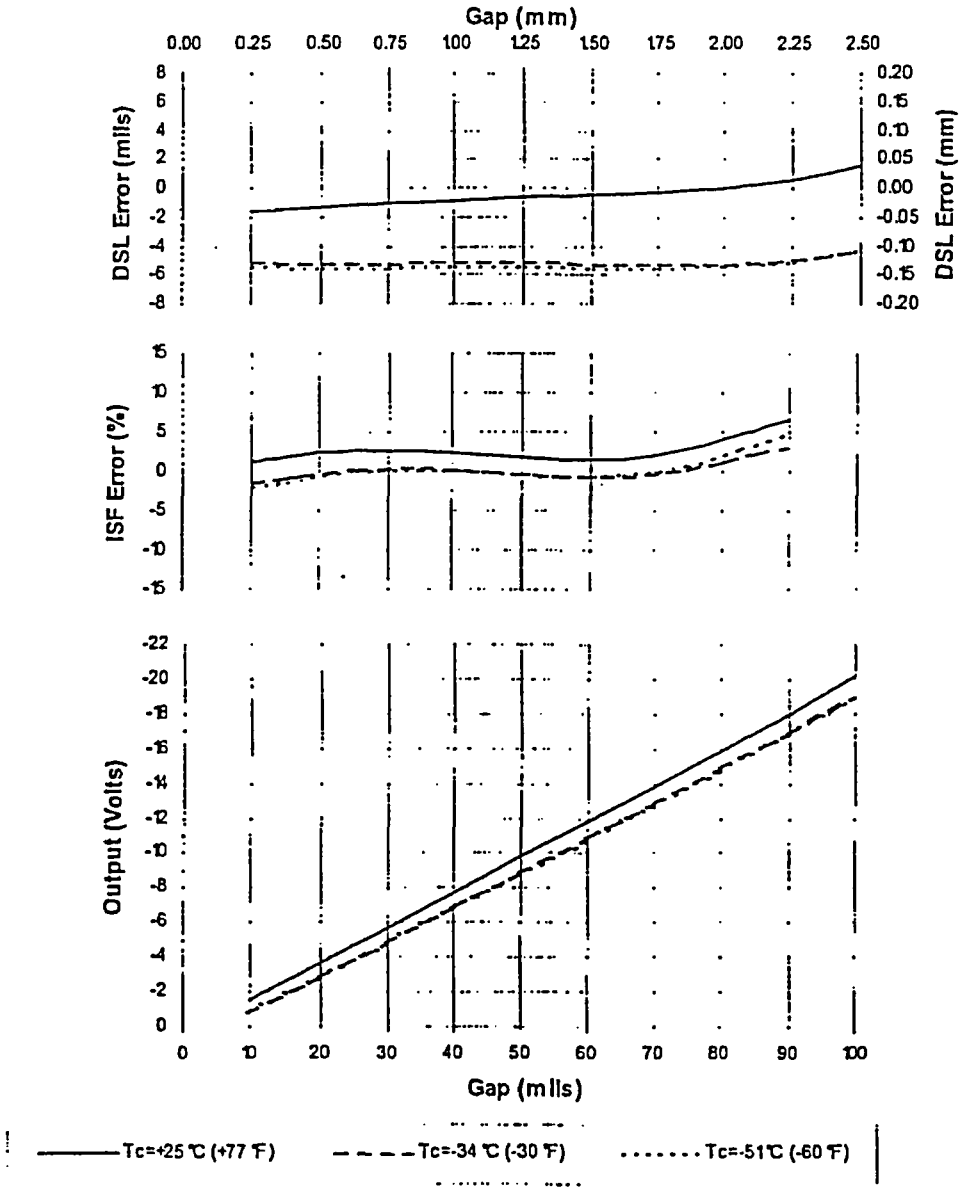

Figure 6 Typical 3300 XL 8 mm 9 m Proximitor® Sensor with 8 m of Extension Cable @ Tc (Probe is at 25 °C)

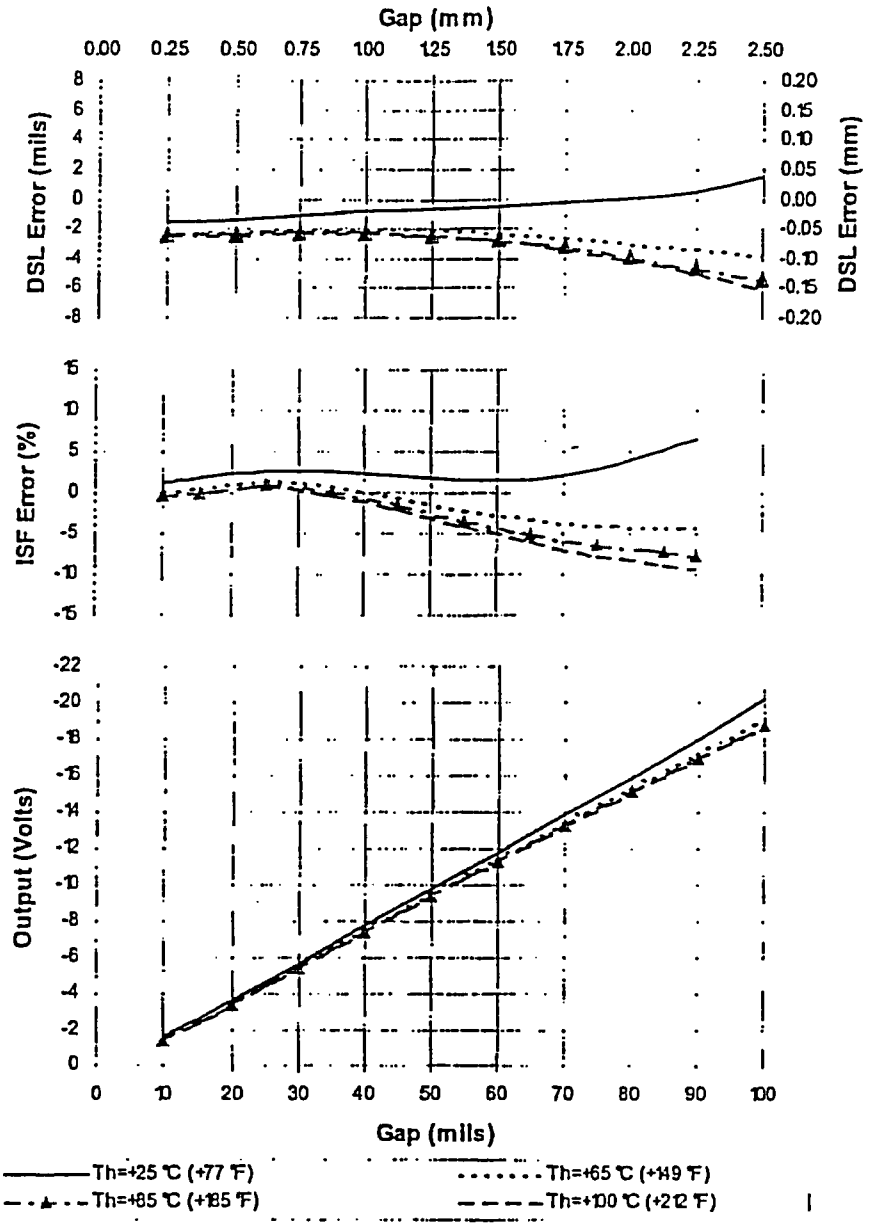

Figure 7 Typical 3300 XL 8 mm 9 m Proximitor® Sensor with 8 m of Extension Cable @ Th (Probe is at 25 °C)

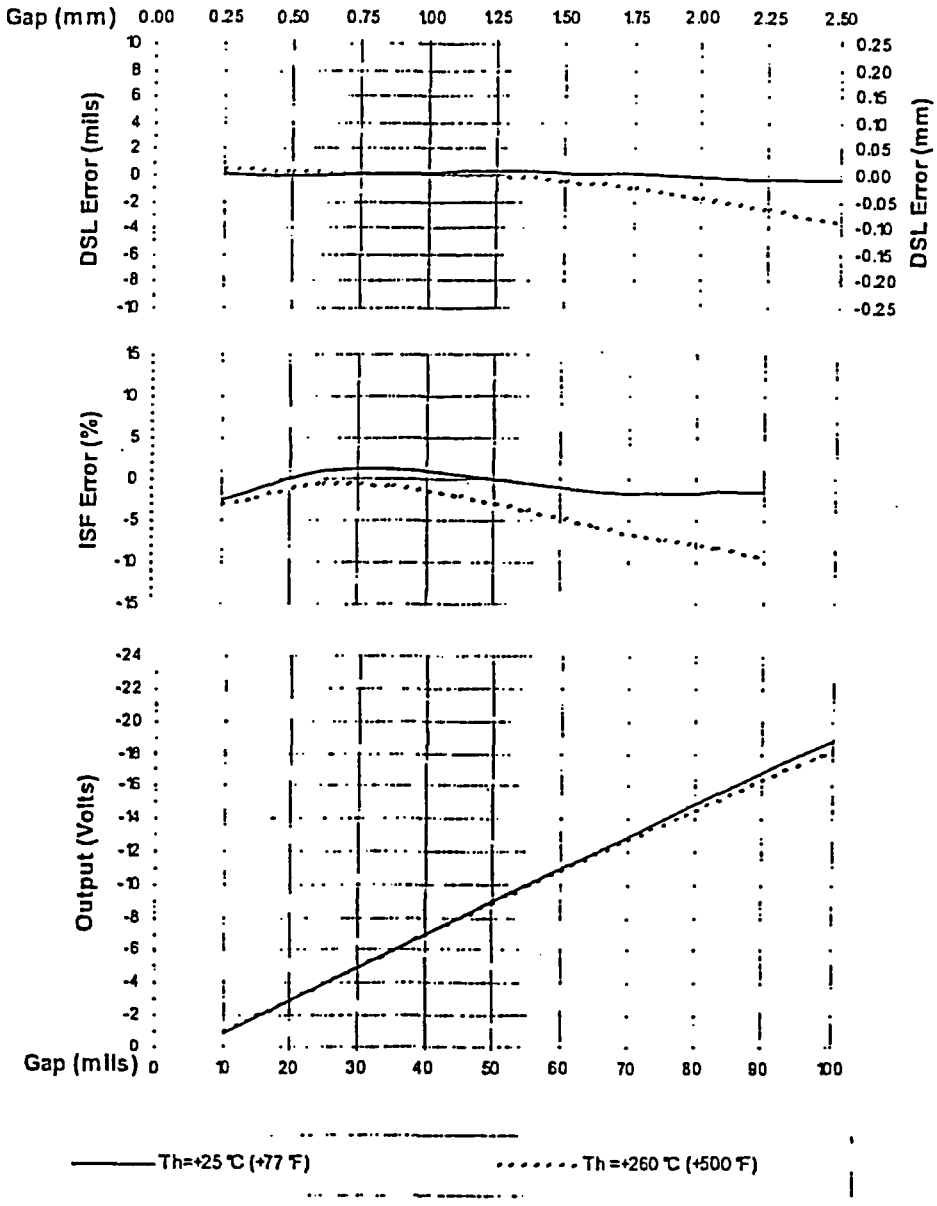

Figure 8 Typical 3300 XL Extended Temperature Range Probe and 4 metres of Extended Temperature Range Extension Cable @ Th (Proximitor® Sensor and probe tip with 1 foot of cable are at +25 °C)

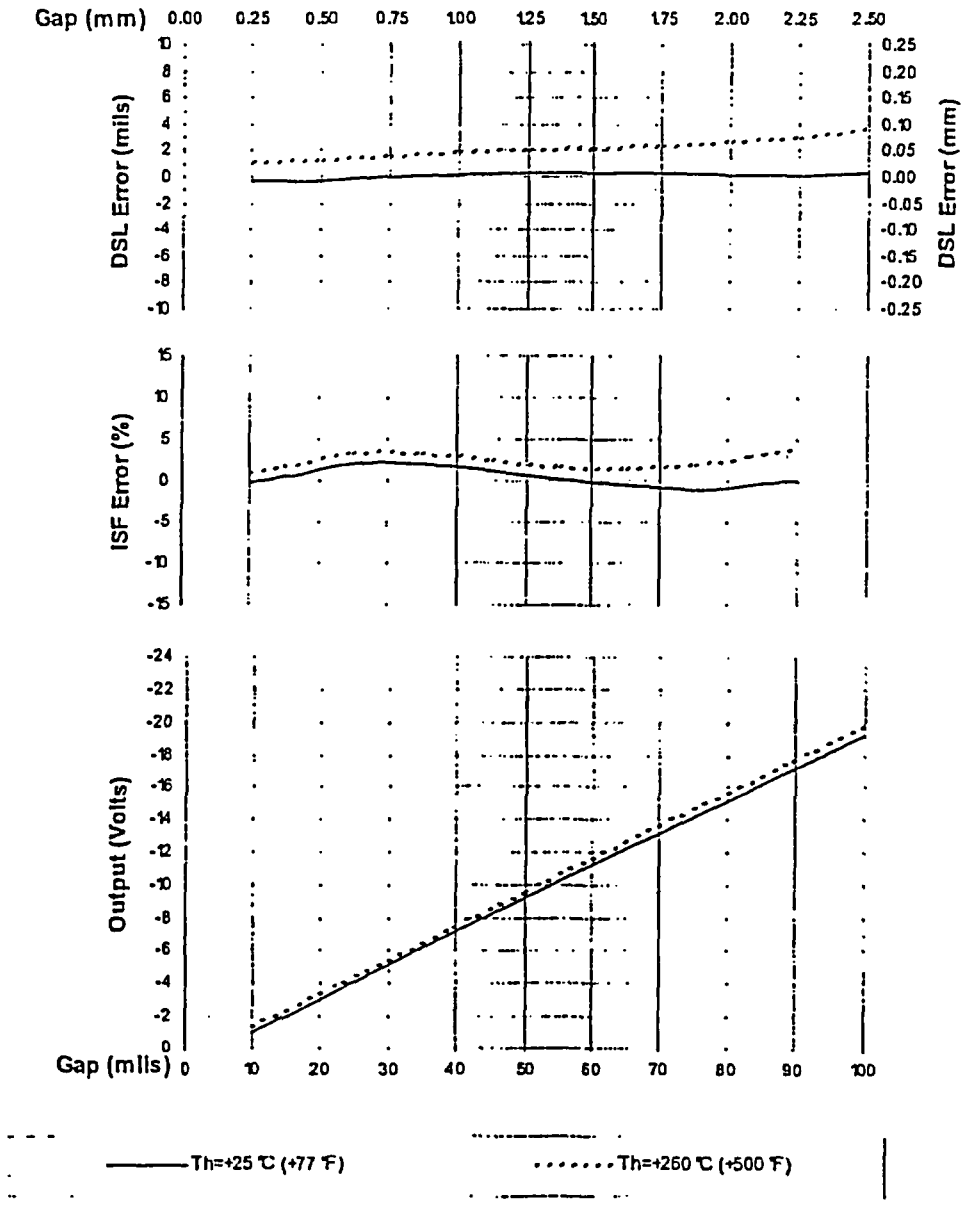

Figure 9 Typical 3300 XL Extended Temperature Range Probe and 8 metres of Extended Temperature Range Extension Cable @ Th (Proximitor® Sensor and probe tip with 1 foot of cable are at +25 °C)

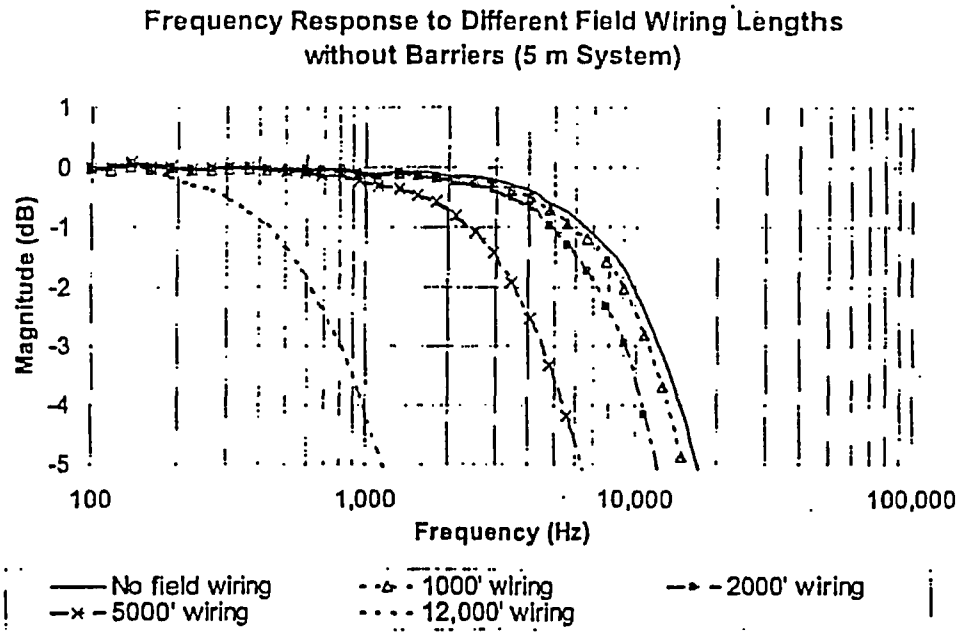

Figure 10 Frequency Response, typical 3300 XL 8 mm 5 m System with varying lengths of field wiring attached, no barriers

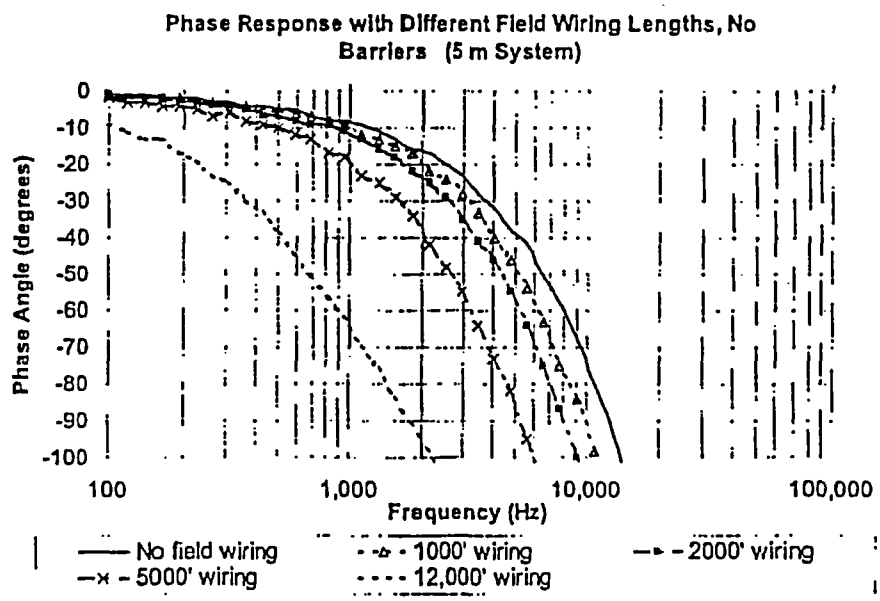

Figure 11 Phase Response, typical 3300 XL 8 mm 5 m System with varying lengths of field wiring attached, no barriers

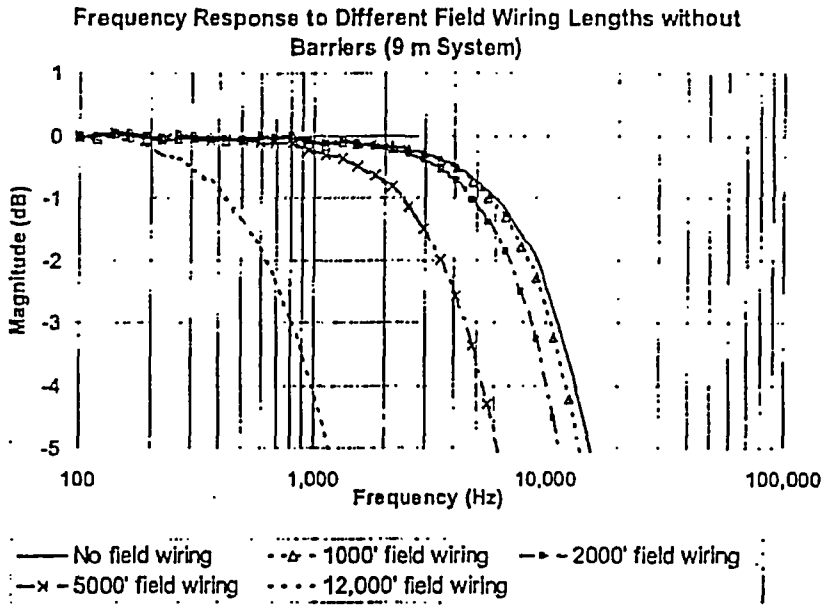

Figure 12 Frequency Response, typical 3300 XL 8 mm 9 m System with varying lengths of field wiring attached, no barriers

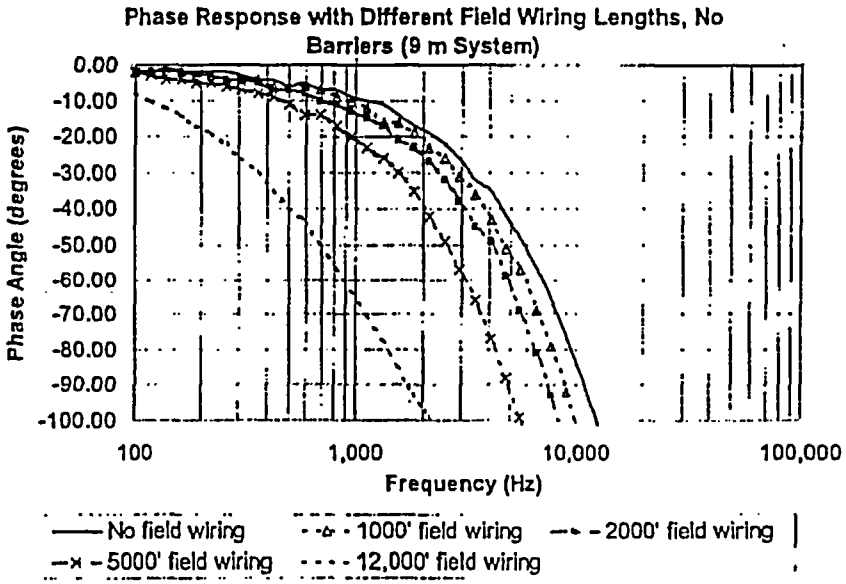

Figure 13 Phase Response, typical 3300 XL 8 mm 9 m System with varying lengths of field wiring attached, no barriers

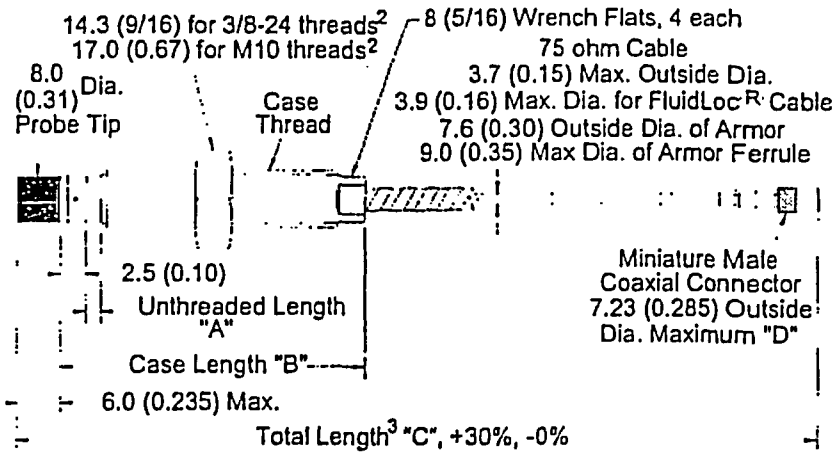

Figure 14 3300 XL 8 mm Proximity probes, Standard Mount

330101 and 330191, 3/8-24 UNF-2A, without armor [7]

330102 and 330192, 3/8-24 UNF-2A, with armor [6]

330103 and 330193, M10X1 thread, without armor [7]

330104 and 330194, M10X1 thread, with armor [6]

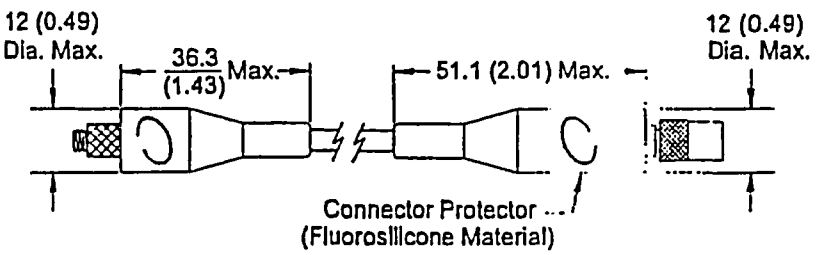

Figure 15 Installed Connector Protectors

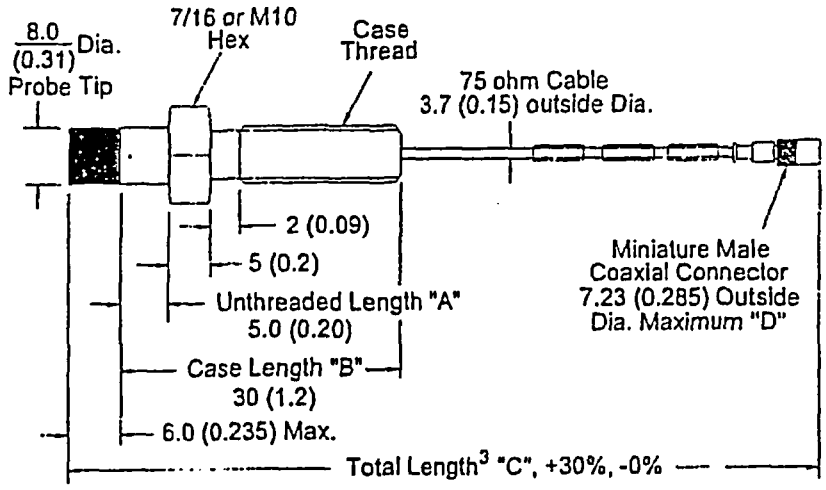

Figure 16 3300 XL 8 mm Proximity Probes, Reverse Mount [4, 7]

330105 and 330195, 3/8-24 UNF-2A threads

330106 and 330196, M10X1 threads

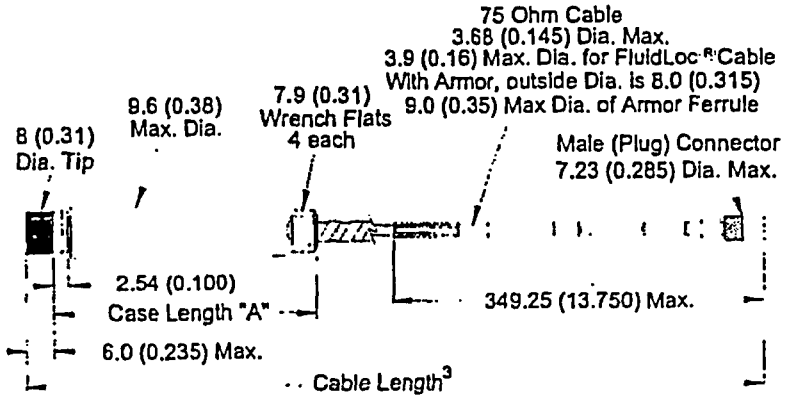

Figure 17 3300 XL 8 mm Proximity Probes, Smooth Case

330140 and 330197, without armor [7]

330141 and 330198, with armor [6]

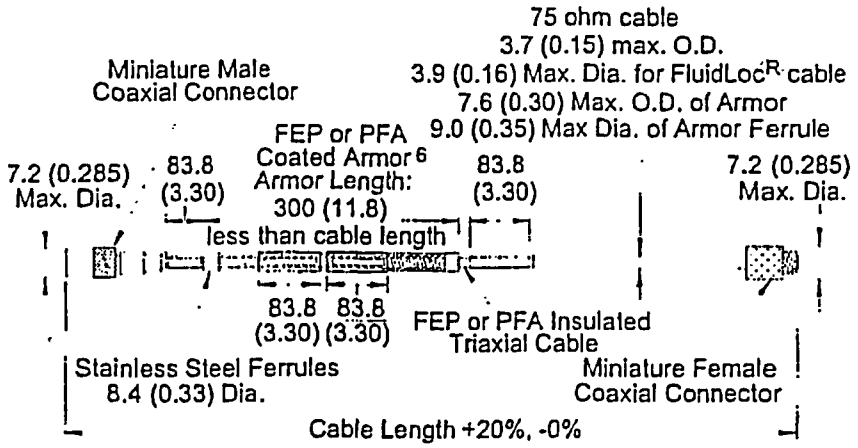

Figure 18 3300 XL Extension Cable

330130, 3300 XL Extension Cable (FEP armor and insulation)

330190, 3300 XL ETR Extension Cable (PFA armor and insulation)

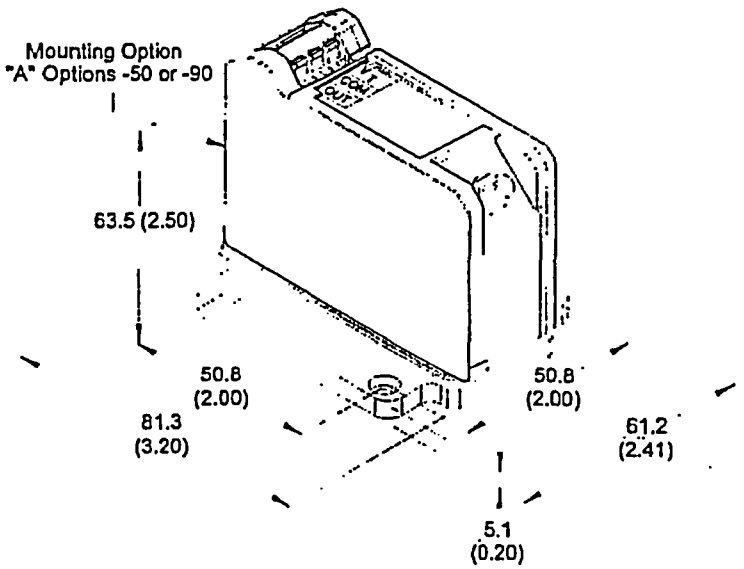

Figure 19 Panel Mount 3300 XL Proximitor® Sensor

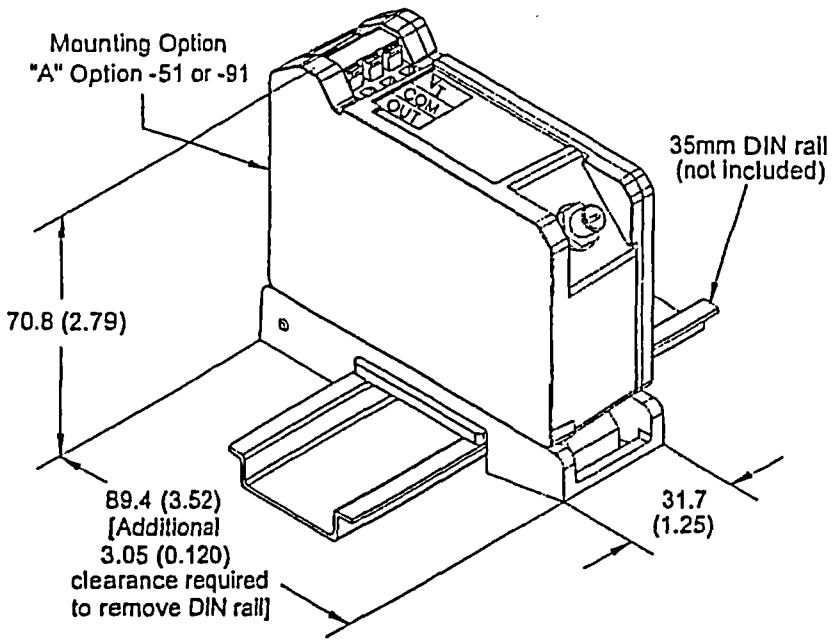

Figure 20 DIN Mount 3300 XL Proximitor® Sensor

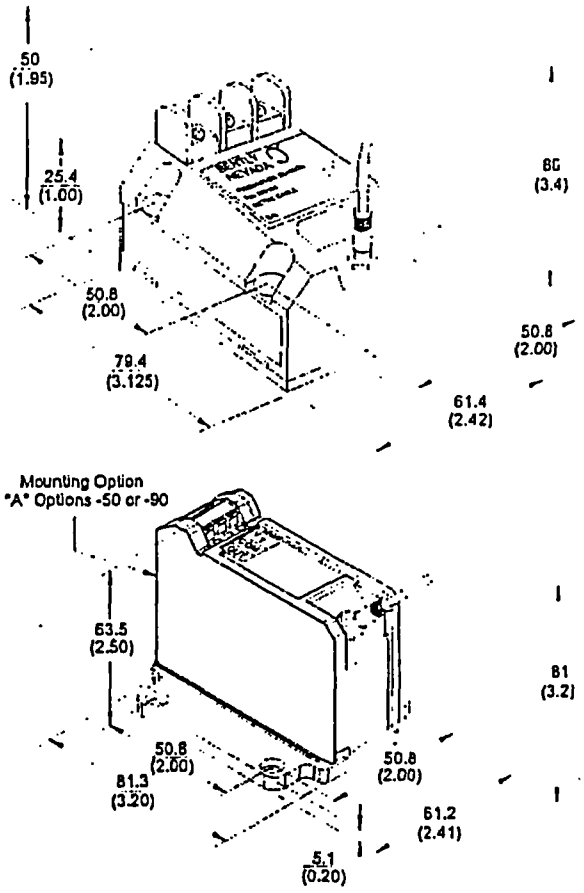

Figure 21 Physical mounting characteristics showing interchangeability of 3300 and 3300 XL Proximitor® Sensors when 4-hole mounting option is used[8]

Notes:

1 All dimensions on figures are in millimetres (inches) unless otherwise noted.

2 Standard mount 8 mm probes supplied with 17 mm or 9/16 inch lock nut.

3 Probes ordered with 5 or 9 metre integral cables have a length tolerance of +20%, -0%.

4 Reverse mount probes not available with armor or connector protector options.

5 Letters inside quotation marks on figures refer to probe ordering options.

6 Stainless steel armor is supplied with FEP outer jacket for standard probes, PFA outer jacket for ETR probes.

7 FEP jacket is standard non-armored portion of the cable for standard probes, PFA jacket on non-armored portion for ETR probes.

8 Use M3.5 or #6 screws for panel-mount Proximitor® Sensors (screws provided when purchasing Bently Nevada housings).

Specifications and Ordering Information

TK15 Keyphasor® Conditioner and Power Supply

BENTLY
Nevada

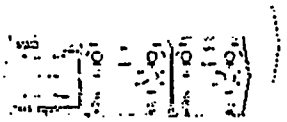

Description

This two-channel instrument is used to power transducers and condition transducer signals for use with portable machinery diagnostic instruments. Applications include:

- Obtaining a Keyphasor® signal
- Pre-recorded transducer signals
- Transducer Power

Specifications

Power Requirements

Input Voltage:	95 to 125 Vac or 190 to 250 Vac (Switch selectable on rear panel).
Input Frequency:	47 to 63 Hz, single phase.
Fuse Ratings	
115 Vac:	0.5 A, 250 V, (time-delay).
230 Vac:	0.25 A, 250 V, (time-delay).

Outputs

+15 Vdc

Nominal Voltage:	+16.2 Vdc ±1.2 Vac.
Maximum Current:	150 mA (100 mA if one optical pickup is used, 50 mA if two optical pickups are used).
Maximum Ripple:	1 mV pp.

-18 Vdc

Nominal Voltage:	-18.9 Vdc ±1.2 Vdc.
Maximum Current:	300 mA.
	Note: The sum of -18 Vdc supply current and -24 Vdc supply current should not exceed 350 mA. A typical Proximitor® will consume 12 mA.
Maximum Ripple:	1 mV pp.

CE

BNC Part Number 141587-01
Revision NC, July 99

-24 Vdc

Nominal Voltage:	-24.2 Vdc ±1.5 Vdc.
Maximum Current:	350 mA.
	Note: The sum of -18 Vdc supply current and -24 Vdc supply current should not exceed 350 mA. A typical Proximitor® will consume 12 mA.
Maximum Ripple:	1 mV pp.

Signal Conditioning

Transducer Input

Input Impedance:	100 k Ω.
ac Coupling:	Time Constant = 0.2 seconds. Filter Corner Frequency = 0.8 Hz.

Optical Pickup Input

Typical LED Current:	50 mA.
Maximum Photo-detector Operating Voltage:	20 Vdc.

Conditioned Signal Output

Output Impedance:	249 Ω, short circuit protected.
Dynamic Voltage Range:	±10 volts minimum.
Clamp Range:	±10 volts minimum.

Input to Output

Gain Accuracy:	±3% maximum over temperature.
Slew Rate:	1.5 Vdc per micro-second minimum.
Bandwidth:	0.8 Hz to 30 kHz minimum.

Environmental Limits

Operating Temperature:	0°C to +50°C (+32°F to +122°F).
Storage Temperature:	-40°C to +85°C (-40°F to +185°F).
Relative Humidity:	To 95% noncondensing.

Physical

Size

Height:	89 mm (3.5 in)
Width:	221 mm (8.7 in)
Depth:	305 mm (12.0 in)
Weight:	3.1 kg (6.8 lb)

Ordering Information

TK15 Keyphasor® Conditioner and Power Supply
80917-01
Option Description

Includes:

1 TK15 Keyphasor® Conditioner and Power Supply
1 User Guide
1 Power Cord
1 Fuse for 230 Vac Operation (Unit is shipped with fuse for 115 Vac operation installed.)

Accessories

73783-02	TK16 Keyphasor® Multiplier/Divider
10798-03	Optical pickup with integral cable and manual.
20545-XX	Extension cable (for optical pickup) XX = cable length in 1-foot increments. Minimum length: 10 ft (3 m). Maximum length: 99 ft (30 m).
81769-01	Reflective Tape, 4.6 metres (15 feet) (used for optical pickup targets).
20211-05	Optical Pickup Mounting Package.

Application Diagrams

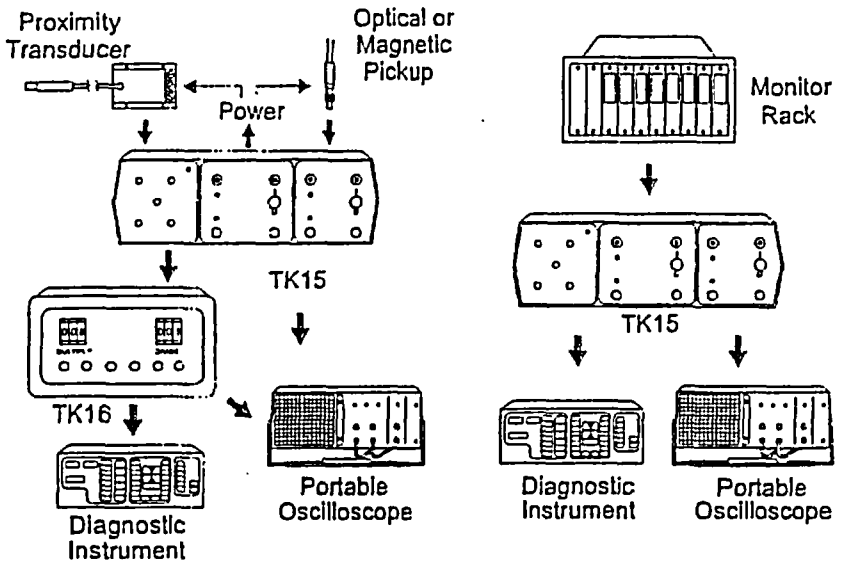

Figure 1: Typical Uses

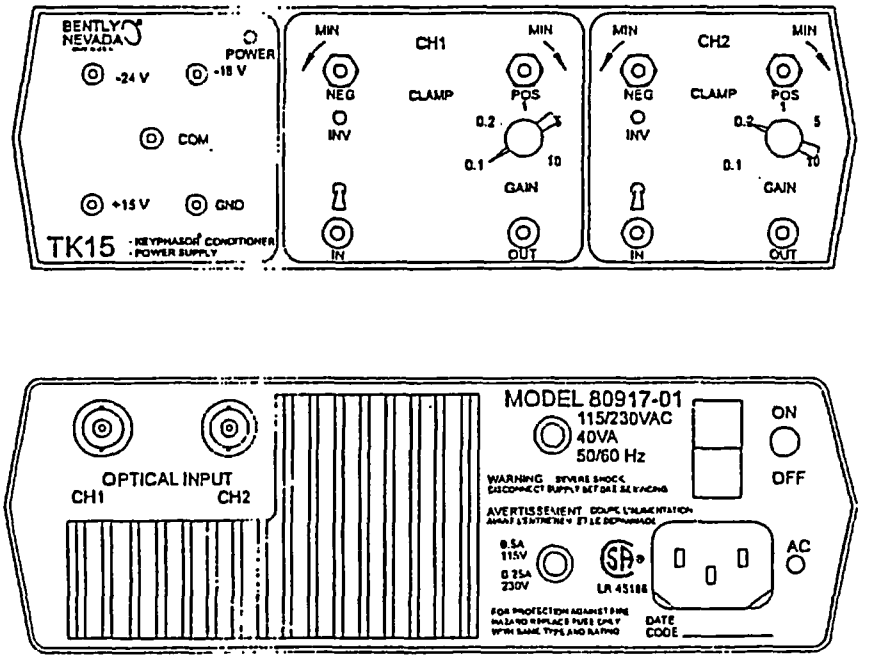

Figure 2: Front and Rear Connections

© 1999 Bently Nevada Corporation
® used in this document are registered marks of Bently Nevada Corporation

FORM-1
VENDOR INFORMATION

PSEG NUCLEAR LLC VTD NUMBER: 327412

☒	ACTIVE	Approved Documentation
☐	APCP	Approved, Pending Change Package (May only be used for Rev. 1)
☐	CAN	Canceled, Not Required
☐	VOID	No longer applicable, superseded by :_____

DISPLACEMENT SELECTION

☐ Electrical ☒ I&C ☐ Mechanical ☐ Other Specify: _____

Safety Related: ☐ Yes ☒ No

Unit Applicability

☐ Salem 1
☐ Salem 2
☐ Salem 3
☐ Salem Common
☒ Hope Creek
☐ Hope Creek & Salem
☐ PSEG Nuclear LLC

System / Title: Vibration Monitor/3300 XL Proximity Probe SAP Sys Code: ____

Vendor Name: Bently Nevada

Vendor Code: B208 Vendor No.: _____

Vendor Category: _____ (Category Codes are listed in DCRMS.)

Purchase Order No. _____

Material Master: 9012388, 9012445, 9012387

Originator: Jerry Almonte Dept: Engineering Group: Projects

Date: 12-22-2004 Ext: 1283

If changes are made to this form, initial and date the change and document in the revision summary.

80062466R3
ADI01R0
NEW VTD

FORM-1
VENDOR INFORMATION

PSEG NUCLEAR LLC VTD NUMBER: 327413

☒	ACTIVE	Approved Documentation
☐	APCP	Approved, Pending Change Package (May only be used for Rev. 1)
☐	CAN	Canceled, Not Required
☐	VOID	No longer applicable, superseded by :_____

DISPLACEMENT SELECTION

☐ Electrical ☐ I&C ☐ Mechanical ☐ Other Specify: _____

Safety Related: ☐ Yes ☐ No

Unit Applicability

☐ Salem 1
☐ Salem 2
☐ Salem 3
☐ Salem Common
☐ Hope Creek
☐ Hope Creek & Salem
☐ PSEG Nuclear LLC

System / Title: Vibration Monitor / TK15 Power Supply SAP Sys Code: ____

Vendor Name: Bently Nevada

Vendor Code: B208 Vendor No.: _____

Vendor Category: _____ (Category Codes are listed in DCRMS.)

Purchase Order No. _____

Material Master: _____

Originator: Jerry Almonte Dept: Engineering Group: Projects

Date: 12-22-2004 Ext: 1283

If changes are made to this form, initial and date the change and document in the revision summary.

80062466 R3
ADI02 R0
NEW VTD

FORM 1

CALCULATION COVER SHEET

Page 1 of ____

CALCULATION NUMBER.: 6H4-2193 REVISION: 01R0

TITLE: Cable tray/Conduit Supports for Vibration Monitoring – Reactor Bldg. @ El. 102' and above

SHTS (CALC): ____ #ATT/#SHTS: ____ #IDV/50.59 SHTS: ____ #TOTAL SHTS: ____

CHECK ONE:

☐ FINAL ☒ INTERIM (Proposed Plant Change) ☐ VOID

☐ FINAL (Future Confirmation Req'd, enter tracking Notification number:) ____

SALEM OR HOPE CREEK: ☐ Q – LIST ☒ IMPORTANT TO SAFETY ☐ NON-SAFETY RELATED

HOPE CREEK ONLY: ☒Q ☐Qs ☐Qsh ☐F ☐R

☐ ARE STATION PROCEDURES IMPACTED? YES ☐ NO ☒

IF "YES", INTERFACE WITH THE SYSTEM ENGINEER & PROCEDURE SPONSOR. ALL IMPACTED PROCEDURES SHOULD BE IDENTIFIED IN A SECTION IN THE CALCULATION BODY [CRCA 70038194-0280]. INCLUDE AN SAP OPERATION FOR UPDATE AND LIST THE SAP ORDERS HERE AND WITHIN THE BODY OF THIS CALCULATION.

none

☒ CP and ADs/CDs INCORPORATED (IF ANY): DCP 80062466, AD S10

DESCRIPTION OF CALCULATION REVISION (If applicable.):

See calculation cover sheet no. 2

PURPOSE:

80062466R3
S10R0
ISSUE NEW CALCULATION

CONCLUSIONS:

	Printed Name / Signature	Date
ORIGINATOR/COMPANY NAME:	J. LU / FPI	
REVIEWER/COMPANY NAME:	N/A	
VERIFIER/COMPANY NAME:	Rohit Vadhar / FPI	
CONTRACTOR SUPERVISOR (If applicable)		
PSEG SUPERVISOR APPROVAL: (Always required)		