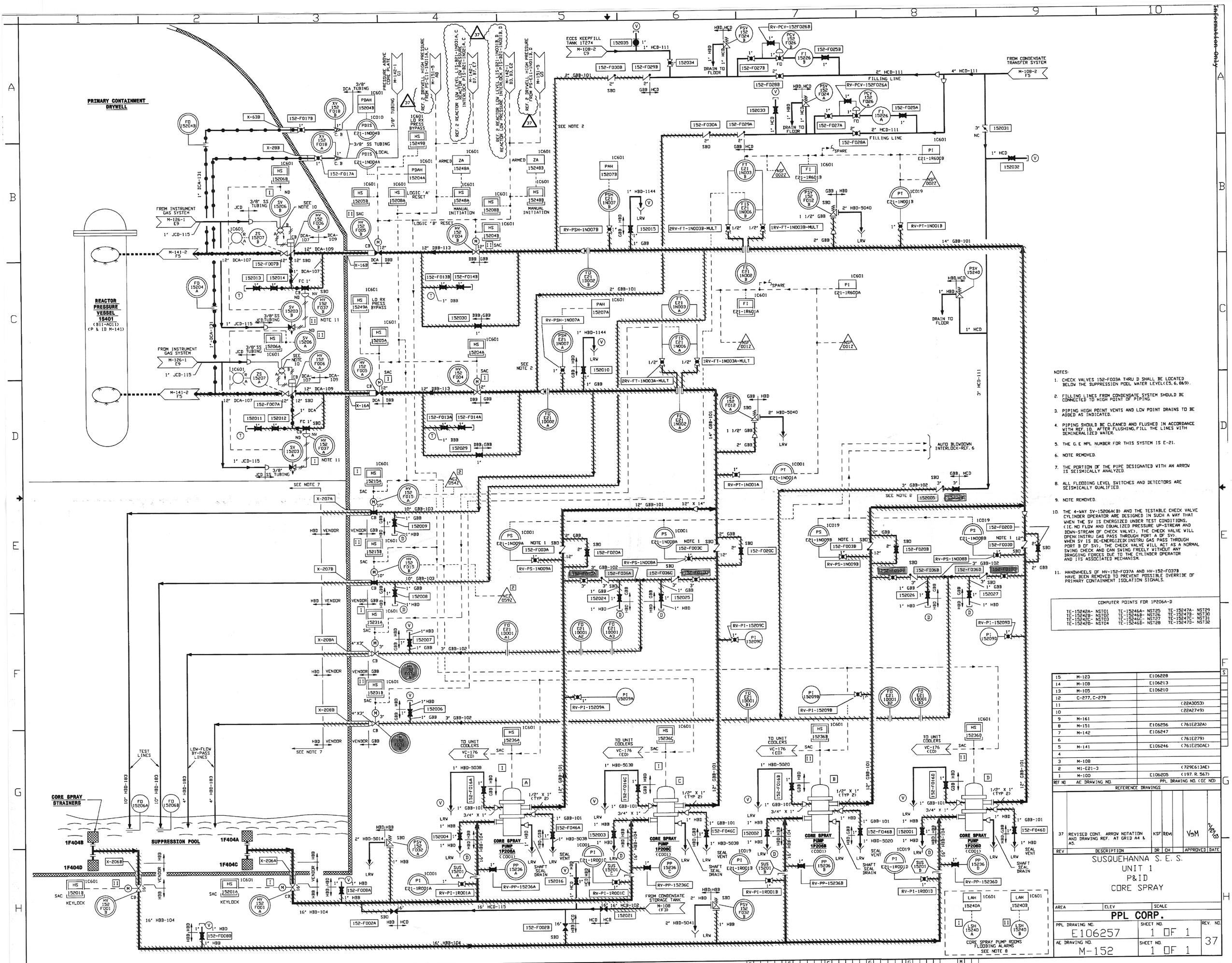

NOTES:

1. CHECK VALVES 152-F003A THRU D SHALL BE LOCATED BELOW THE SUPPRESSION POOL WATER LEVEL(E5, 6, 8&9).
2. FILLING LINES FROM CONDENSATE SYSTEM SHOULD BE CONNECTED TO HIGH POINT OF PIPING.
3. PIPING HIGH POINT VENTS AND LOW POINT DRAINS TO BE ADDED AS INDICATED.
4. PIPING SHOULD BE CLEANED AND FLUSHED IN ACCORDANCE WITH REF. 10. AFTER FLUSHING, FILL THE LINES WITH DEMINERALIZED WATER.
5. THE G.E MPL NUMBER FOR THIS SYSTEM IS E-21.
6. NOTE REMOVED.
7. THE PORTION OF THE PIPE DESIGNATED WITH AN ARROW IS SEISMICALLY ANALYZED.
8. ALL FLOODING LEVEL SWITCHES AND DETECTORS ARE SEISMICALLY QUALIFIED.
9. NOTE REMOVED.
10. THE 4-WAY SV-15206A(B) AND THE TESTABLE CHECK VALVE CYLINDER OPERATOR ARE DESIGNED IN SUCH A WAY THAT WHEN THE SV IS ENERGIZED UNDER TEST CONDITIONS, (I.E. NO FLOW AND EQUALIZED PRESSURE UP-STREAM AND DOWN-STREAM OF CHECK VALVE), THE CHECK VALVE WILL OPEN(INSTRU GAS PASS THROUGH PORT A OF SV). WHEN SV IS DE-ENERGIZED(INSTRU GAS PASS THROUGH PORT B OF SV), THE CHECK VALVE WILL ACT AS A NORMAL SWING CHECK AND CAN SWING FREELY WITHOUT ANY DRAGGING FORCES DUE TO THE CYLINDER OPERATOR AND ITS ASSOCIATED MECHANISM.
11. HANDWHEELS OF HV-152-F037A AND HV-152-F037B HAVE BEEN REMOVED TO PREVENT POSSIBLE OVERRIDE OF PRIMARY CONTAINMENT ISOLATION SIGNALS.

COMPUTER POINTS FOR 1P206A-D

TE-15242A- NST01	TE-15246A- NST25	TE-15247A- NST29
TE-15242B- NST02	TE-15246B- NST26	TE-15247B- NST30
TE-15242C- NST03	TE-15246C- NST27	TE-15247C- NST31
TE-15242D- NST04	TE-15246D- NST28	TE-15247D- NST32

REF NO	AE DRAWING NO.	PPL DRAWING NO. (GE NO)
15	M-123	E106228
14	M-108	E106213
13	M-105	E106210
12	C-277, C-279	
11		(22A3053)
10		(22A2749)
9	M-161	
8	M-151	E106256 (761E232A)
7	M-142	E106247
6		(761E279)
5	M-141	E106246 (761E250AE)
4		
3	M-108	
2	M1-E21-3	(729E613AE)
1	M-100	E106205 (197. R. 567)

REFERENCE DRAWINGS

REV	DESCRIPTION	DR	CH	APPROVED	DATE
37	REVISED CONT. ARROW NOTATION AND DRAWING REF. AT GRID A4 & A5.	KSF	REM	VSM	2/24/03

SUSQUEHANNA S. E. S.
UNIT 1
P&ID
CORE SPRAY

AREA | ELEV | SCALE

PPL CORP.

PPL DRAWING NO.	SHEET NO.	REV. NO.
E106257	1 OF 1	37
AE DRAWING NO. M-152	SHEET NO. 1 OF 1	

D-12