ion Only

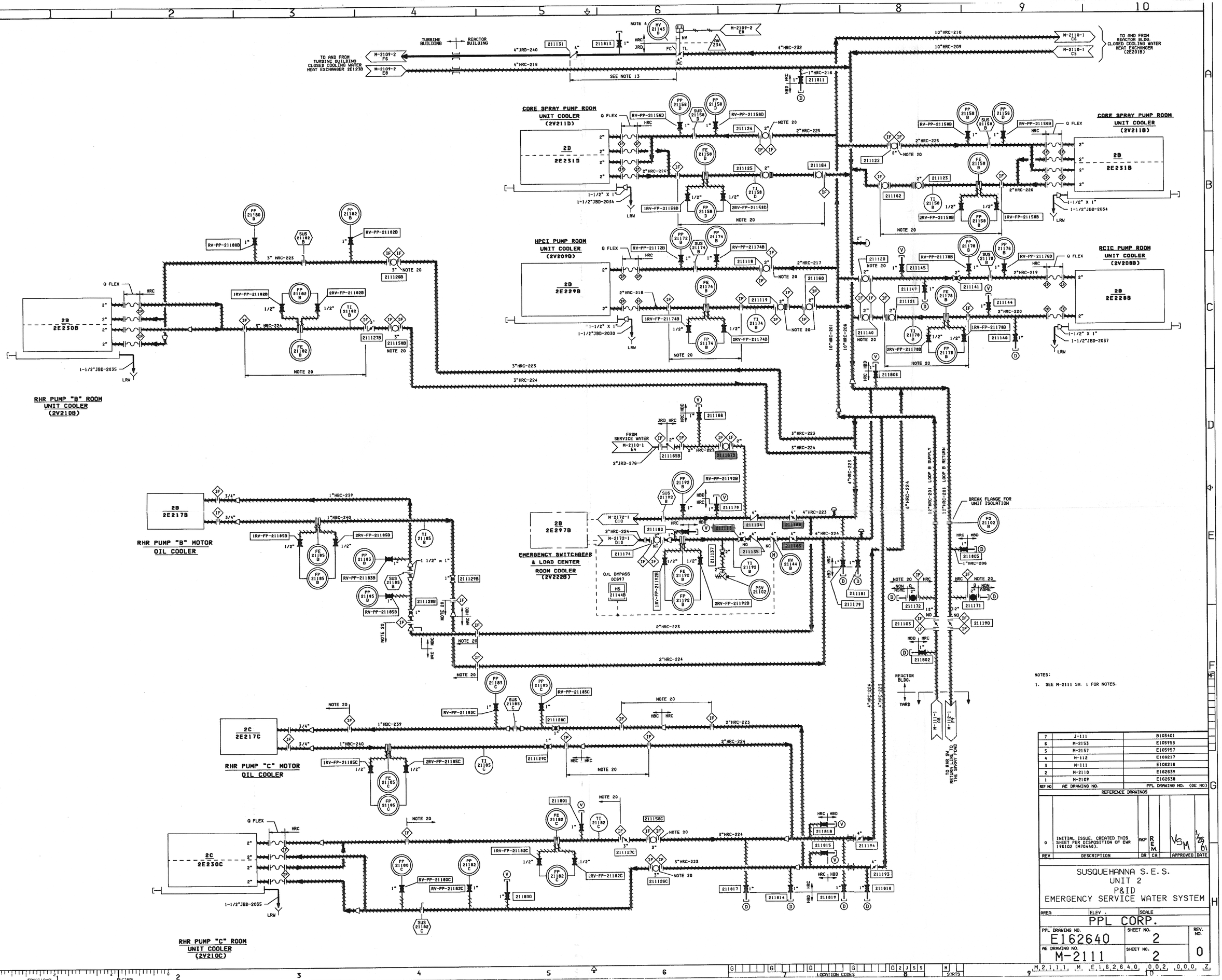

REF NO	AE DRAWING NO.	PPL DRAWING NO. (OE NO)
7	J-111	B103401
6	M-2153	E105953
5	M-2157	E105957
4	M-112	E106217
3	M-111	E106216
2	M-2110	E162639
1	M-2109	E162638

REFERENCE DRAWINGS

REV	DESCRIPTION	DR	CH	APPROVED	DATE
0	INITIAL ISSUE. CREATED THIS SHEET PER DISPOSITION OF EWR 196102 (M70440).	AKP	REM	VSM	1/29/01

SUSQUEHANNA S.E.S.
UNIT 2
P&ID
EMERGENCY SERVICE WATER SYSTEM

AREA | ELEV. | SCALE

PPL CORP.

PPL DRAWING NO.	SHEET NO.	REV. NO.
E162640	2	0
AE DRAWING NO. M-2111	SHEET NO. 2	

Group: SRWS User: APPROV Dwg: W2111WE162640002000Z Time:01/24/2001 11:31:31 Login:<No User ID>

D-08