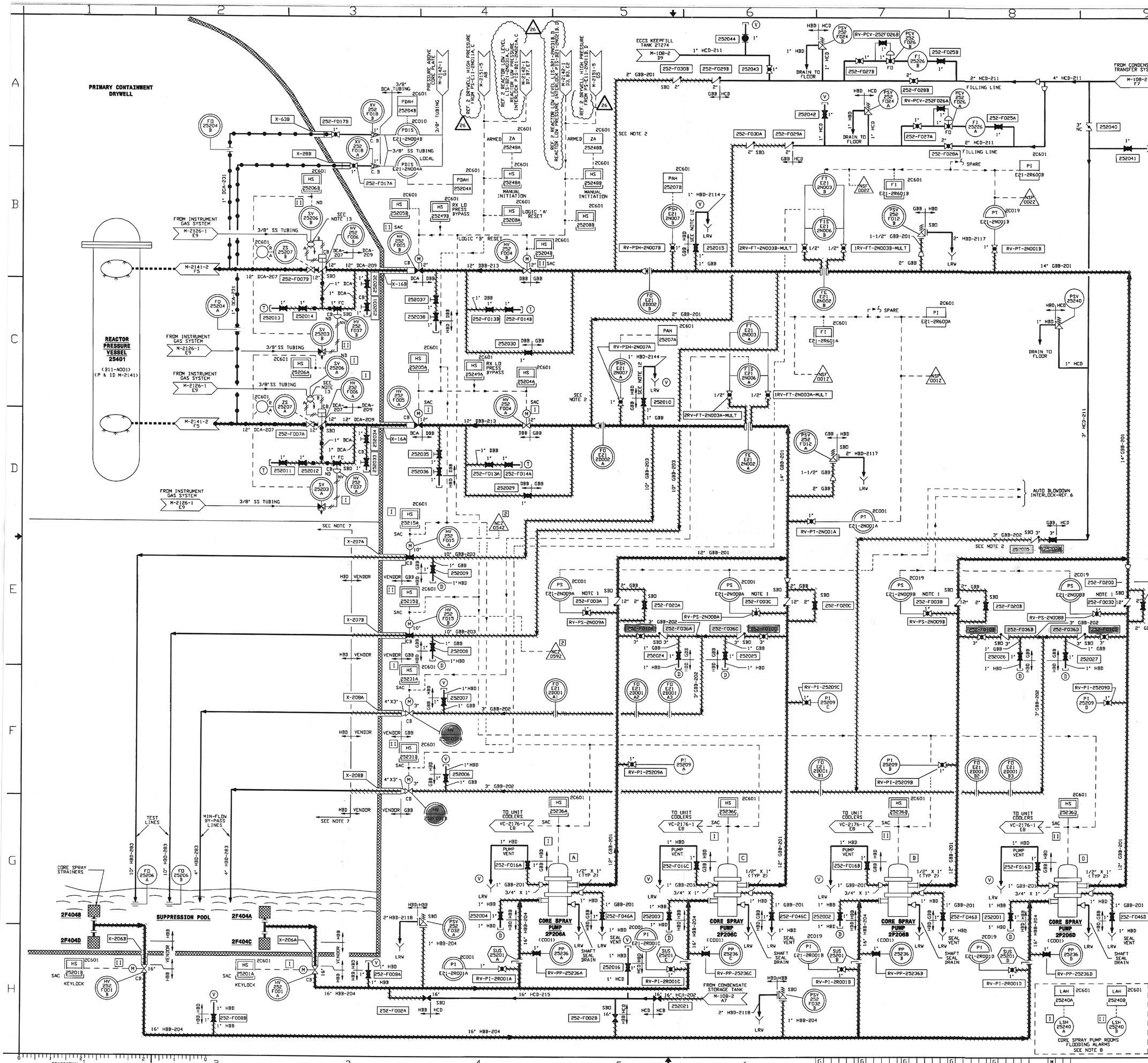

NOTES:

1. CHECK VALVES 252-F003A THRU D SHALL BE LOCATED BELOW THE SUPPRESSION POOL WATER LEVEL(C4, D2).
2. FILLING LINES FROM CONDENSATE SYSTEM SHOULD BE CONNECTED TO HIGH POINT OF PIPING.
3. PIPING HIGH POINT VENTS AND LOW POINT DRAINS TO BE ADDED AS INDICATED.
4. PIPING SHOULD BE CLEANED AND FLUSHED IN ACCORDANCE WITH REF. 10 AFTER FLUSHING, FILL THE LINES WITH DEMERALIZED WATER.
5. THE G.E MPL NUMBER FOR THIS SYSTEM IS E21.
6. NOTE REMOVED.
7. THE PORTION OF THE PIPE DESIGNATED WITH AN ARROW IS SEISMICALLY ANALYZED.
8. ALL FLOODING LEVEL SWITCHES AND DETECTORS ARE SEISMICALLY QUALIFIED.
9. NOTE REMOVED.
10. THIS REVISION INCORPORATES CHANGES ON P&ID M-152 THRU REV. 13.
11. WHERE SLOPES ARE INDICATED FOR G.E. INSTRUMENT LINES, A MINIMUM OF 1/2 INCH PER FOOT SHALL BE PROVIDED.
12. LOCATE FUNNEL AS CLOSE TO THE VENT VALVE AS PRACTICAL.
13. THE 4-WAY SV-25206(A,B) AND THE TESTABLE CHECK VALVE CYLINDER OPERATOR ARE DESIGNED IN SUCH WAY THAT, WHEN THE SV IS ENERGIZED UNDER TEST CONDITIONS (I.E. NO FLOWS AND EQUALIZED PRESSURE UP-STREAM AND DOWNSTREAM OF CHECK VALVE), THE CHECK VALVE WILL OPEN (INSTR. GAS PASS THRU PORT A OF SV). WHEN SV IS DE-ENERGIZED (INSTR. GAS PASS THROUGH PORT B OF SV), THE CHECK VALVE WILL ACT AS A NORMAL SWING CHECK, AND CAN SWING FREELY WITHOUT ANY DRAGING FORCES DUE TO THE CYLINDER OPERATOR.

COMPUTER POINTS FOR 2P206A-D

TE-25242A- NST01	TE-25246A- NST25	TE-25247A- NST29
TE-25242B- NST02	TE-25246B- NST26	TE-25247B- NST30
TE-25242C- NST03	TE-25246C- NST27	TE-25247C- NST31
TE-25242D- NST04	TE-25246D- NST28	TE-25247D- NST32

REF NO	AE DRAWING NO.	PPL DRAWING NO. (GE NO)
15	M-2123	E162647
14	M-108	E106213
13	M-2105	E162776
12	C-277, C-279	
11		(22A3053)
10		(22A2749)
9	M-2161	E105961
8	M-2151	E105951 (761E232A)
7	M-2142	E105942
6	M-B21-B(1)-B(3)-B(4)	(761E279)
5	M-2141	E105941 (761E250AE)
4		
3	M-108	E106213
2	M1-E21-3	(729E613AE)
1	M-100	E106205 (197. R. 567)

REFERENCE DRAWINGS

REV	DESCRIPTION	DR	CH	APPROVED	DATE
26	REVISED CONT. ARROW NOTATION AND DRAWING REF. AT GRID A4 & A5.	KSF	REM	VSM	7/23/03

SUSQUEHANNA S. E. S.
UNIT 2
P&ID
CORE SPRAY

AREA N/A | ELEV N/A | SCALE NONE

PPL CORP.

PPL DRAWING NO. E105952 | SHEET NO. 1 OF 1 | REV. NO. 26

AE DRAWING NO. M-2152 | SHEET NO. 1 OF 1

D-03

Information Only