# EDE Data For Point Sources Near The Body Surface

George Xu
Associate Professor
Nuclear Engineering and Health Physics Programs
Rensselaer Polytechnic Institute
Troy, New York
*Phone: 518-276-4014
*E-mail: xug2@rpi.edu

Sponsored by EPRI

1

## Purpose

To present additional test results for point sources near the body (<30cm) to support EPRI Two-Dosimeter algorithm for reporting personnel EDE

2

# Background

- EPRI Two-Dosimeter Method provided technical grounds for measuring EDE using one dosimeter for routine jobs <u>or</u> two dosimeters for special jobs
- Current NRC exemption limited the use of the method to sources at least 12 inches (~30 cm) from the body based on earlier EDE data
- Limitation made the exemption impractical for many uses in power plants

3

# Spatial Definition of the Phantom

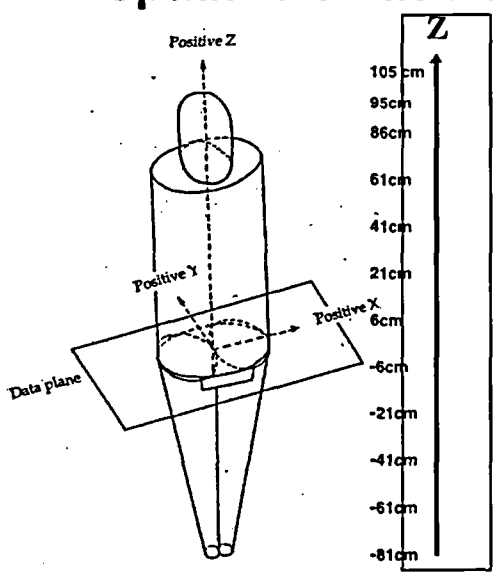


- **A data plane is a 2D cross section defined by the X-Y coordinate**
- **12 data planes are defined for various height, Z**
- **Z = 95 cm is the top of the head**
- **Z= 0 cm is the upper end of the legs**
- **Z= - 81 cm is the bottom of the feet**

4

# Spatial Definition of the Data Pane

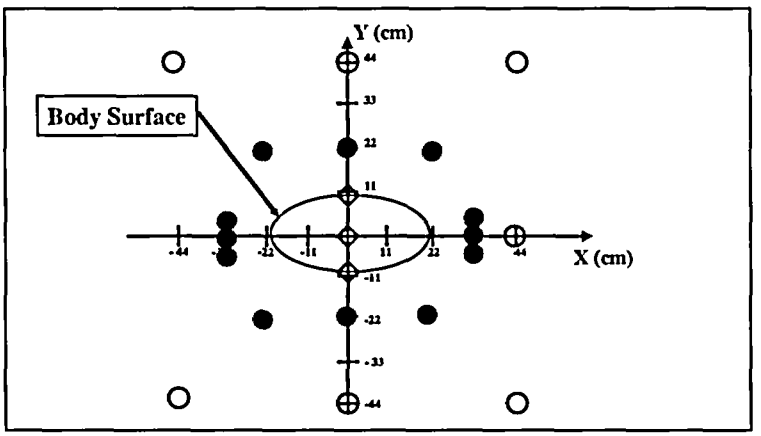


- The phantom faces the negative Y axis
- The empty circles are the locations studied before
- The solid circles are the new locations
- Diamonds are additional for Z=105 cm (overhead) only
- New locations are about 10-cm from the body surface
- Three locations in the side of the body are averaged

5

# EPRI Two-dosimeter Algorithm To Be Tested

EPRI Algorithm #3

$$H'_E = [\mathrm{Max}(R_{front}, R_{back}) + \mathrm{Avg}(R_{front}, R_{back})]/2$$

$$Ratio = \frac{H'_E}{H_E}$$

Where $H'_E$ is the estimated EDE;
$H_E$ is the real EDE from Monte Carlo calculations
R is dosimeter reading

6

## Monte Carlo Calculation to Determine the Real " EDE"

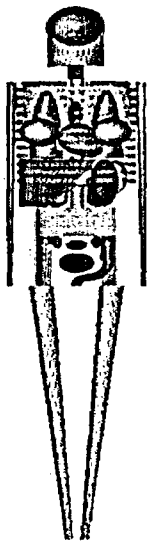

- MCNP Code (version 4C) originated from Los Alamos National Lab
- MIRD adult male and female phantoms originated from Oak Ridge National Lab for Society of Nuclear Medicine (1987)
  - 50 organs and tissues
  - Two dosimeters (front and back)

Photon energies:
- 0.3 MeV
- 1.0 MeV
- 1.5 MeV

7

## ICRP Radiation Protection Dosimetry System

1. Effective Dose Equivalent (EDE) (ICRP-26 (1977) and 10CFR20 (1994))

$$EDE = \Sigma_T w_T H_T$$

2. Effective Dos (ED) (ICRP-60 (1991)

$$\text{Eff Dose} = \Sigma_T w_T H_T \quad \text{and} \quad \text{Eq dose, } H_T = \Sigma_R w_R D_{T,R}$$

| Organ (T) | $w_T$(ICRP-26) | $w_T$(ICRP-60) | $w_T$ (ICRP 2005) |
|---|---|---|---|
| Gonads | 0.25 | 0.20 | |
| Bone marrow (red) | 0.12 | 0.12 | |
| Colon | Not given | 0.12 | |
| Lung | 0.12 | 0.12 | |
| Stomach | Not given | 0.12 | Being Evaluated |
| Bladder | Not given | 0.05 | |
| Breast | 0.15 | 0.05 | |
| Liver | Not given | 0.05 | |
| Esophagus | Not given | 0.05 | |
| Thyroid | 0.03 | 0.05 | |
| Skin | Not given | 0.01 | |
| Bone surface | 0.03 | 0.01 | |
| Remainder* | 0.30 | 0.05 | |

*Definition of the "remainder" follows the ICRP-26 and ICRP 60.

8

## Findings of EPRI Method at <30 cm

- Photon point sources of 0.3, 1.0 and 1.5 MeV cover most possible exposures
- 10-cm from the body source is a reasonable "near-body" scenario in nuclear power plant environments
- For each Z, all data on each the whole data plane are averaged

(Please Reference data in the Excel table)

9

Test 1 is the single dosimeter algorithm

Test 2 = (front + back dosimeters)/(2*EDE)

Test 3 = [Higher of (front; back dosimeters) + Average of (front + back dosimeters)]/(2*EDE)

| | | | | | | | | | | | | |
|---|---|---|---|---|---|---|---|---|---|---|---|---|
| | | | | | | | | | | | MAX | 0.96 |
| | | | | | | | | | | | MIN | 0.53 |
| | X | Y | Z | Energy | Test 1 | Test 2 | Test 3 | EDE | ED | ED/EDE | Dosimeter Front | Dosimeter Back |
| 1 | | | | | | | | | | | | |
| 2 | 0 | 0 | 105 | 0.3 | 0.02 | 0.02 | 0.02 | 2.50E-17 | 1.37E-17 | 5.49E-01 | 5.11E-19 | 4.16E-19 |
| 3 | 0 | -10 | 105 | 0.3 | 1.03 | 0.53 | 0.78 | 2.58E-17 | 1.36E-17 | 5.28E-01 | 2.67E-17 | 5.36E-19 |
| 4 | 0 | 10 | 105 | 0.3 | 0.03 | 0.68 | 1.00 | 2.03E-17 | 1.15E-17 | 5.65E-01 | 5.98E-19 | 2.69E-17 |
| 5 | 0 | -22 | 105 | 0.3 | 1.23 | 0.64 | 0.93 | 2.46E-17 | 1.48E-17 | 6.04E-01 | 3.01E-17 | 1.27E-18 |
| 6 | 22 | -22 | 105 | 0.3 | 1.36 | 0.75 | 1.05 | 2.06E-17 | 1.32E-17 | 6.44E-01 | 2.79E-17 | 2.91E-18 |
| 7 | -22 | -22 | 105 | 0.3 | 1.36 | 0.75 | 1.05 | 2.06E-17 | 1.32E-17 | 6.44E-01 | 2.79E-17 | 2.91E-18 |
| 8 | 33 | -5 | 105 | 0.3 | 0.91 | 0.52 | 0.72 | 1.60E-17 | 1.05E-17 | 6.58E-01 | 1.47E-17 | 2.17E-18 |
| 9 | -33 | -5 | 105 | 0.3 | 0.91 | 0.52 | 0.72 | 1.60E-17 | 1.05E-17 | 6.58E-01 | 1.47E-17 | 2.17E-18 |
| 10 | 33 | 0 | 105 | 0.3 | 0.16 | 0.15 | 0.16 | 1.57E-17 | 1.02E-17 | 6.53E-01 | 2.57E-18 | 2.05E-18 |
| 11 | -33 | 0 | 105 | 0.3 | 0.16 | 0.15 | 0.16 | 1.57E-17 | 1.02E-17 | 6.53E-01 | 2.57E-18 | 2.05E-18 |
| 12 | 33 | 5 | 105 | 0.3 | 0.17 | 0.79 | 1.09 | 1.48E-17 | 9.84E-18 | 6.64E-01 | 2.52E-18 | 2.08E-17 |
| 13 | -33 | 5 | 105 | 0.3 | 0.17 | 0.79 | 1.09 | 1.48E-17 | 9.84E-18 | 6.64E-01 | 2.52E-18 | 2.08E-17 |
| 14 | 22 | 22 | 105 | 0.3 | 0.22 | 1.08 | 1.50 | 1.44E-17 | 1.05E-17 | 7.27E-01 | 3.22E-18 | 2.78E-17 |
| 15 | -22 | 22 | 105 | 0.3 | 0.22 | 1.08 | 1.50 | 1.44E-17 | 1.05E-17 | 7.27E-01 | 3.22E-18 | 2.78E-17 |
| 16 | 0 | 22 | 105 | 0.3 | 0.08 | 0.95 | 1.39 | 1.68E-17 | 1.15E-17 | 6.84E-01 | 1.40E-18 | 3.06E-17 |
| 17 | | | Average= | | 0.54 | 0.63 | 0.88 | | | | | |
| 18 | | | | | | | | | | | | |
| 19 | 0 | -22 | 81 | 0.3 | 1.04 | 0.56 | 0.80 | 7.32E-17 | 4.76E-17 | 6.50E-01 | 7.62E-17 | 5.25E-18 |
| 20 | 22 | -22 | 81 | 0.3 | 1.28 | 0.72 | 1.00 | 4.73E-17 | 3.08E-17 | 6.52E-01 | 6.05E-17 | 7.59E-18 |
| 21 | -22 | -22 | 81 | 0.3 | 1.28 | 0.72 | 1.00 | 4.73E-17 | 3.08E-17 | 6.52E-01 | 6.05E-17 | 7.59E-18 |
| 22 | 33 | -5 | 81 | 0.3 | 0.62 | 0.38 | 0.50 | 3.07E-17 | 2.08E-17 | 6.77E-01 | 1.90E-17 | 4.68E-18 |
| 23 | -33 | -5 | 81 | 0.3 | 0.62 | 0.38 | 0.50 | 3.07E-17 | 2.08E-17 | 6.77E-01 | 1.90E-17 | 4.68E-18 |
| 24 | 33 | 0 | 81 | 0.3 | 0.26 | 0.23 | 0.25 | 2.95E-17 | 2.13E-17 | 7.23E-01 | 7.64E-18 | 6.07E-18 |
| 25 | -33 | 0 | 81 | 0.3 | 0.26 | 0.23 | 0.25 | 2.95E-17 | 2.13E-17 | 7.23E-01 | 7.64E-18 | 6.07E-18 |
| 26 | 33 | 5 | 81 | 0.3 | 0.18 | 0.84 | 1.18 | 2.78E-17 | 2.05E-17 | 7.37E-01 | 5.02E-18 | 4.19E-17 |
| 27 | -33 | 5 | 81 | 0.3 | 0.18 | 0.84 | 1.18 | 2.78E-17 | 2.05E-17 | 7.37E-01 | 5.02E-18 | 4.19E-17 |
| 28 | 22 | 22 | 81 | 0.3 | 0.20 | 1.03 | 1.44 | 3.17E-17 | 2.55E-17 | 8.04E-01 | 6.38E-18 | 5.88E-17 |
| 29 | -22 | 22 | 81 | 0.3 | 0.20 | 1.03 | 1.44 | 3.17E-17 | 2.55E-17 | 8.04E-01 | 6.38E-18 | 5.88E-17 |
| 30 | 0 | 22 | 81 | 0.3 | 0.11 | 0.87 | 1.25 | 4.75E-17 | 3.68E-17 | 7.76E-01 | 5.34E-18 | 7.72E-17 |
| 31 | | | Average= | | 0.52 | 0.65 | 0.90 | | | | | |
| 32 | | | | | | | | | | | | |
| 33 | 0 | -22 | 61 | 0.3 | 1.49 | 0.80 | 1.14 | 1.68E-16 | 1.05E-16 | 6.27E-01 | 2.49E-16 | 1.75E-17 |
| 34 | 22 | -22 | 61 | 0.3 | 1.46 | 0.82 | 1.14 | 8.94E-17 | 5.89E-17 | 6.59E-01 | 1.31E-16 | 1.66E-17 |
| 35 | -22 | -22 | 61 | 0.3 | 1.46 | 0.82 | 1.14 | 8.94E-17 | 5.89E-17 | 6.59E-01 | 1.31E-16 | 1.66E-17 |
| 36 | 33 | -5 | 61 | 0.3 | 1.36 | 0.83 | 1.09 | 4.89E-17 | 3.39E-17 | 6.92E-01 | 6.65E-17 | 1.49E-17 |
| 37 | -33 | -5 | 61 | 0.3 | 1.36 | 0.83 | 1.09 | 4.89E-17 | 3.39E-17 | 6.92E-01 | 6.65E-17 | 1.49E-17 |
| 38 | 33 | 0 | 61 | 0.3 | 0.46 | 0.46 | 0.46 | 4.58E-17 | 3.14E-17 | 6.86E-01 | 2.12E-17 | 2.07E-17 |
| 39 | -33 | 0 | 61 | 0.3 | 0.46 | 0.46 | 0.46 | 4.58E-17 | 3.14E-17 | 6.86E-01 | 2.12E-17 | 2.07E-17 |
| 40 | 33 | 5 | 61 | 0.3 | 0.35 | 1.10 | 1.48 | 4.32E-17 | 3.13E-17 | 7.24E-01 | 1.50E-17 | 8.04E-17 |
| 41 | -33 | 5 | 61 | 0.3 | 0.35 | 1.10 | 1.48 | 4.32E-17 | 3.13E-17 | 7.24E-01 | 1.50E-17 | 8.04E-17 |
| 42 | 22 | 22 | 61 | 0.3 | 0.33 | 1.36 | 1.88 | 5.43E-17 | 4.38E-17 | 8.06E-01 | 1.80E-17 | 1.30E-16 |
| 43 | -22 | 22 | 61 | 0.3 | 0.33 | 1.36 | 1.88 | 5.43E-17 | 4.38E-17 | 8.06E-01 | 1.80E-17 | 1.30E-16 |
| 44 | 0 | 22 | 61 | 0.3 | 0.20 | 1.49 | 2.13 | 8.96E-17 | 7.14E-17 | 7.97E-01 | 1.78E-17 | 2.49E-16 |
| 45 | | | Average= | | 0.80 | 0.95 | 1.28 | | | | | |
| 46 | | | | | | | | | | | | |
| 47 | 0 | -22 | 41 | 0.3 | 6.04 | 3.11 | 4.58 | 1.73E-16 | 1.25E-16 | 7.25E-01 | 1.05E-15 | 3.05E-17 |
| 48 | 22 | -22 | 41 | 0.3 | 2.11 | 1.15 | 1.63 | 1.02E-16 | 8.05E-17 | 7.93E-01 | 2.14E-16 | 2.00E-17 |
| 49 | -22 | -22 | 41 | 0.3 | 2.11 | 1.15 | 1.63 | 1.02E-16 | 8.05E-17 | 7.93E-01 | 2.14E-16 | 2.00E-17 |
| 50 | 33 | -5 | 41 | 0.3 | 1.83 | 1.08 | 1.46 | 6.11E-17 | 4.90E-17 | 8.02E-01 | 1.12E-16 | 1.95E-17 |
| 51 | -33 | -5 | 41 | 0.3 | 1.83 | 1.08 | 1.46 | 6.11E-17 | 4.90E-17 | 8.02E-01 | 1.12E-16 | 1.95E-17 |
| 52 | 33 | 0 | 41 | 0.3 | 0.54 | 0.55 | 0.55 | 5.89E-17 | 4.57E-17 | 7.76E-01 | 3.21E-17 | 3.24E-17 |
| 53 | -33 | 0 | 41 | 0.3 | 0.54 | 0.55 | 0.55 | 5.89E-17 | 4.57E-17 | 7.76E-01 | 3.21E-17 | 3.24E-17 |
| 54 | 33 | 5 | 41 | 0.3 | 0.34 | 1.13 | 1.53 | 5.69E-17 | 4.39E-17 | 7.71E-01 | 1.96E-17 | 1.10E-16 |
| 55 | -33 | 5 | 41 | 0.3 | 0.34 | 1.13 | 1.53 | 5.69E-17 | 4.39E-17 | 7.71E-01 | 1.96E-17 | 1.10E-16 |
| 56 | 22 | 22 | 41 | 0.3 | 0.26 | 1.50 | 2.13 | 7.71E-17 | 5.81E-17 | 7.54E-01 | 2.00E-17 | 2.12E-16 |
| 57 | -22 | 22 | 41 | 0.3 | 0.26 | 1.50 | 2.13 | 7.71E-17 | 5.81E-17 | 7.54E-01 | 2.00E-17 | 2.12E-16 |
| 58 | 0 | 22 | 41 | 0.3 | 0.23 | 4.06 | 5.98 | 1.33E-16 | 9.54E-17 | 7.19E-01 | 3.07E-17 | 1.05E-15 |
| 59 | | | Average= | | 1.37 | 1.50 | 2.09 | | | | | |

| | X | Y | Z | Energy | Test 1 | Test 2 | Test 3 | EDE | ED | ED/EDE | Dosimeter Front | Dosimeter Back |
|---|---|---|---|---|---|---|---|---|---|---|---|---|
| 60 | | | | | | | | | | | | |
| 61 | 0 | -22 | 21 | 0.3 | 1.77 | 0.95 | 1.36 | 1.40E-16 | 1.25E-16 | 8.91E-01 | 2.49E-16 | 1.67E-17 |
| 62 | 22 | -22 | 21 | 0.3 | 1.63 | 0.89 | 1.26 | 8.08E-17 | 7.65E-17 | 9.47E-01 | 1.32E-16 | 1.24E-17 |
| 63 | -22 | -22 | 21 | 0.3 | 1.63 | 0.89 | 1.26 | 8.08E-17 | 7.65E-17 | 9.47E-01 | 1.32E-16 | 1.24E-17 |
| 64 | 33 | -5 | 21 | 0.3 | 1.74 | 1.00 | 1.37 | 4.58E-17 | 4.17E-17 | 9.10E-01 | 7.97E-17 | 1.14E-17 |
| 65 | -33 | -5 | 21 | 0.3 | 1.74 | 1.00 | 1.37 | 4.58E-17 | 4.17E-17 | 9.10E-01 | 7.97E-17 | 1.14E-17 |
| 66 | 33 | 0 | 21 | 0.3 | 0.45 | 0.45 | 0.45 | 4.34E-17 | 3.94E-17 | 9.09E-01 | 1.96E-17 | 1.94E-17 |
| 67 | -33 | 0 | 21 | 0.3 | 0.45 | 0.45 | 0.45 | 4.34E-17 | 3.94E-17 | 9.09E-01 | 1.96E-17 | 1.94E-17 |
| 68 | 33 | 5 | 21 | 0.3 | 0.28 | 1.08 | 1.48 | 4.24E-17 | 3.80E-17 | 8.95E-01 | 1.17E-17 | 7.96E-17 |
| 69 | -33 | 5 | 21 | 0.3 | 0.28 | 1.08 | 1.48 | 4.24E-17 | 3.80E-17 | 8.95E-01 | 1.17E-17 | 7.96E-17 |
| 70 | 22 | 22 | 21 | 0.3 | 0.20 | 1.18 | 1.67 | 6.13E-17 | 5.30E-17 | 8.63E-01 | 1.23E-17 | 1.33E-16 |
| 71 | -22 | 22 | 21 | 0.3 | 0.20 | 1.18 | 1.67 | 6.13E-17 | 5.30E-17 | 8.63E-01 | 1.23E-17 | 1.33E-16 |
| 72 | 0 | 22 | 21 | 0.3 | 0.17 | 1.27 | 1.83 | 1.04E-16 | 8.62E-17 | 8.26E-01 | 1.78E-17 | 2.48E-16 |
| 73 | | | Average= | | 0.88 | 0.95 | 1.30 | | | | | |
| 74 | | | | | | | | | | | | |
| 75 | 0 | -22 | 6 | 0.3 | 0.62 | 0.33 | 0.48 | 1.58E-16 | 1.29E-16 | 8.17E-01 | 9.84E-17 | 6.68E-18 |
| 76 | 22 | -22 | 6 | 0.3 | 0.99 | 0.53 | 0.76 | 7.35E-17 | 6.42E-17 | 8.73E-01 | 7.26E-17 | 5.74E-18 |
| 77 | -22 | -22 | 6 | 0.3 | 0.99 | 0.53 | 0.76 | 7.35E-17 | 6.42E-17 | 8.73E-01 | 7.26E-17 | 5.74E-18 |
| 78 | 33 | -5 | 6 | 0.3 | 1.43 | 0.78 | 1.11 | 3.39E-17 | 3.09E-17 | 9.11E-01 | 4.85E-17 | 4.77E-18 |
| 79 | -33 | -5 | 6 | 0.3 | 1.43 | 0.78 | 1.11 | 3.39E-17 | 3.09E-17 | 9.11E-01 | 4.85E-17 | 4.77E-18 |
| 80 | 33 | 0 | 6 | 0.3 | 0.28 | 0.29 | 0.29 | 3.06E-17 | 2.75E-17 | 8.99E-01 | 8.60E-18 | 8.85E-18 |
| 81 | -33 | 0 | 6 | 0.3 | 0.28 | 0.29 | 0.29 | 3.06E-17 | 2.75E-17 | 8.99E-01 | 8.60E-18 | 8.85E-18 |
| 82 | 33 | 5 | 6 | 0.3 | 0.17 | 0.91 | 1.27 | 2.97E-17 | 2.66E-17 | 8.95E-01 | 5.15E-18 | 4.87E-17 |
| 83 | -33 | 5 | 6 | 0.3 | 0.17 | 0.91 | 1.27 | 2.97E-17 | 2.66E-17 | 8.95E-01 | 5.15E-18 | 4.87E-17 |
| 84 | 22 | 22 | 6 | 0.3 | 0.14 | 0.89 | 1.27 | 4.42E-17 | 3.97E-17 | 8.99E-01 | 6.04E-18 | 7.27E-17 |
| 85 | -22 | 22 | 6 | 0.3 | 0.14 | 0.89 | 1.27 | 4.42E-17 | 3.97E-17 | 8.99E-01 | 6.04E-18 | 7.27E-17 |
| 86 | 0 | 22 | 6 | 0.3 | 0.09 | 0.69 | 0.99 | 7.55E-17 | 6.39E-17 | 8.47E-01 | 6.81E-18 | 9.78E-17 |
| 87 | | | Average= | | 0.56 | 0.65 | 0.91 | | | | | |
| 88 | | | | | | | | | | | | |
| 89 | 0 | -22 | -21 | 0.3 | 0.58 | 0.30 | 0.44 | 5.74E-17 | 4.45E-17 | 7.75E-01 | 3.30E-17 | 9.94E-19 |
| 90 | 22 | -22 | -21 | 0.3 | 0.86 | 0.45 | 0.65 | 3.49E-17 | 2.78E-17 | 7.96E-01 | 3.00E-17 | 1.23E-18 |
| 91 | -22 | -22 | -21 | 0.3 | 0.86 | 0.45 | 0.65 | 3.49E-17 | 2.78E-17 | 7.96E-01 | 3.00E-17 | 1.23E-18 |
| 92 | 33 | -5 | -21 | 0.3 | 1.62 | 0.84 | 1.23 | 1.37E-17 | 1.05E-17 | 7.66E-01 | 2.23E-17 | 9.13E-19 |
| 93 | -33 | -5 | -21 | 0.3 | 1.62 | 0.84 | 1.23 | 1.37E-17 | 1.05E-17 | 7.66E-01 | 2.23E-17 | 9.13E-19 |
| 94 | 33 | 0 | -21 | 0.3 | 0.14 | 0.13 | 0.14 | 1.27E-17 | 9.51E-18 | 7.51E-01 | 1.79E-18 | 1.53E-18 |
| 95 | -33 | 0 | -21 | 0.3 | 0.14 | 0.13 | 0.14 | 1.27E-17 | 9.51E-18 | 7.51E-01 | 1.79E-18 | 1.53E-18 |
| 96 | 33 | 5 | -21 | 0.3 | 0.08 | 0.96 | 1.40 | 1.19E-17 | 8.99E-18 | 7.59E-01 | 8.93E-19 | 2.18E-17 |
| 97 | -33 | 5 | -21 | 0.3 | 0.08 | 0.96 | 1.40 | 1.19E-17 | 8.99E-18 | 7.59E-01 | 8.93E-19 | 2.18E-17 |
| 98 | 22 | 22 | -21 | 0.3 | 0.08 | 0.91 | 1.32 | 1.67E-17 | 1.34E-17 | 8.04E-01 | 1.37E-18 | 2.89E-17 |
| 99 | -22 | 22 | -21 | 0.3 | 0.08 | 0.91 | 1.32 | 1.67E-17 | 1.34E-17 | 8.04E-01 | 1.37E-18 | 2.89E-17 |
| ## | 0 | 22 | -21 | 0.3 | 0.05 | 0.59 | 0.86 | 2.86E-17 | 2.22E-17 | 7.74E-01 | 1.31E-18 | 3.25E-17 |
| ## | | | Average= | | 0.52 | 0.62 | 0.90 | | | | | |
| ## | | | | | | | | | | | | |
| ## | 0 | -22 | -41 | 0.3 | 0.84 | 0.43 | 0.63 | 2.29E-17 | 1.66E-17 | 7.25E-01 | 1.92E-17 | 3.39E-19 |
| ## | 22 | -22 | -41 | 0.3 | 1.01 | 0.52 | 0.76 | 1.72E-17 | 1.28E-17 | 7.47E-01 | 1.73E-17 | 4.10E-19 |
| ## | -22 | -22 | -41 | 0.3 | 1.01 | 0.52 | 0.76 | 1.72E-17 | 1.28E-17 | 7.47E-01 | 1.73E-17 | 4.10E-19 |
| ## | 33 | -5 | -41 | 0.3 | 2.01 | 1.02 | 1.52 | 6.71E-18 | 4.60E-18 | 6.86E-01 | 1.35E-17 | 2.83E-19 |
| ## | -33 | -5 | -41 | 0.3 | 2.01 | 1.02 | 1.52 | 6.71E-18 | 4.60E-18 | 6.86E-01 | 1.35E-17 | 2.83E-19 |
| ## | 33 | 0 | -41 | 0.3 | 0.07 | 0.07 | 0.08 | 6.05E-18 | 4.05E-18 | 6.70E-01 | 4.09E-19 | 4.98E-19 |
| ## | -33 | 0 | -41 | 0.3 | 0.07 | 0.07 | 0.08 | 6.05E-18 | 4.05E-18 | 6.70E-01 | 4.09E-19 | 4.98E-19 |
| ## | 33 | 5 | -41 | 0.3 | 0.06 | 1.25 | 1.84 | 5.71E-18 | 3.88E-18 | 6.79E-01 | 3.33E-19 | 1.39E-17 |
| ## | -33 | 5 | -41 | 0.3 | 0.06 | 1.25 | 1.84 | 5.71E-18 | 3.88E-18 | 6.79E-01 | 3.33E-19 | 1.39E-17 |
| ## | 22 | 22 | -41 | 0.3 | 0.06 | 1.09 | 1.61 | 8.00E-18 | 5.86E-18 | 7.32E-01 | 4.55E-19 | 1.70E-17 |
| ## | -22 | 22 | -41 | 0.3 | 0.06 | 1.09 | 1.61 | 8.00E-18 | 5.86E-18 | 7.32E-01 | 4.55E-19 | 1.70E-17 |
| ## | 0 | 22 | -41 | 0.3 | 0.04 | 0.75 | 1.11 | 1.25E-17 | 8.82E-18 | 7.03E-01 | 4.97E-19 | 1.83E-17 |
| ## | | | Average= | | 0.61 | 0.76 | 1.11 | | | | | |
| ## | | | | | | | | | | | | |
| ## | 0 | -22 | -61 | 0.3 | 1.08 | 0.55 | 0.81 | 1.15E-17 | 7.94E-18 | 6.88E-01 | 1.24E-17 | 2.27E-19 |
| ## | 22 | -22 | -61 | 0.3 | 1.15 | 0.58 | 0.87 | 9.47E-18 | 6.75E-18 | 7.13E-01 | 1.09E-17 | 1.24E-19 |
| ## | -22 | -22 | -61 | 0.3 | 1.15 | 0.58 | 0.87 | 9.47E-18 | 6.75E-18 | 7.13E-01 | 1.09E-17 | 1.24E-19 |
| ## | 33 | -5 | -61 | 0.3 | 1.46 | 0.75 | 1.10 | 3.68E-18 | 2.34E-18 | 6.36E-01 | 5.37E-18 | 1.28E-19 |
| ## | -33 | -5 | -61 | 0.3 | 1.46 | 0.75 | 1.10 | 3.68E-18 | 2.34E-18 | 6.36E-01 | 5.37E-18 | 1.28E-19 |

| | X | Y | Z | Energy | Test 1 | Test 2 | Test 3 | EDE | ED | ED/EDE | Dosimeter Front | Dosimeter Back |
|---|---|---|---|---|---|---|---|---|---|---|---|---|
| ## | 33 | 0 | -61 | 0.3 | 0.06 | 0.07 | 0.07 | 3.21E-18 | 1.98E-18 | 6.18E-01 | 2.05E-19 | 2.21E-19 |
| ## | -33 | 0 | -61 | 0.3 | 0.06 | 0.07 | 0.07 | 3.21E-18 | 1.98E-18 | 6.18E-01 | 2.05E-19 | 2.21E-19 |
| ## | 33 | 5 | -61 | 0.3 | 0.06 | 0.91 | 1.34 | 2.97E-18 | 1.86E-18 | 6.29E-01 | 1.79E-19 | 5.24E-18 |
| ## | -33 | 5 | -61 | 0.3 | 0.06 | 0.91 | 1.34 | 2.97E-18 | 1.86E-18 | 6.29E-01 | 1.79E-19 | 5.24E-18 |
| ## | 22 | 22 | -61 | 0.3 | 0.05 | 1.37 | 2.04 | 4.19E-18 | 2.92E-18 | 6.96E-01 | 2.09E-19 | 1.13E-17 |
| ## | -22 | 22 | -61 | 0.3 | 0.05 | 1.37 | 2.04 | 4.19E-18 | 2.92E-18 | 6.96E-01 | 2.09E-19 | 1.13E-17 |
| ## | 0 | 22 | -61 | 0.3 | 0.04 | 1.05 | 1.55 | 5.83E-18 | 3.86E-18 | 6.62E-01 | 2.44E-19 | 1.20E-17 |
| ## | | | Average= | | 0.56 | 0.75 | 1.10 | | | | | |
| ## | | | | | | | | | | | | |
| ## | 0 | -22 | -81 | 0.3 | 1.24 | 0.63 | 0.93 | 6.27E-18 | 4.24E-18 | 6.75E-01 | 7.75E-18 | 1.33E-19 |
| ## | 22 | -22 | -81 | 0.3 | 1.44 | 0.73 | 1.09 | 5.52E-18 | 3.83E-18 | 6.94E-01 | 7.96E-18 | 9.83E-20 |
| ## | -22 | -22 | -81 | 0.3 | 1.44 | 0.73 | 1.09 | 5.52E-18 | 3.83E-18 | 6.94E-01 | 7.96E-18 | 9.83E-20 |
| ## | 33 | -5 | -81 | 0.3 | 1.21 | 0.62 | 0.91 | 2.21E-18 | 1.37E-18 | 6.21E-01 | 2.67E-18 | 6.71E-20 |
| ## | -33 | -5 | -81 | 0.3 | 1.21 | 0.62 | 0.91 | 2.21E-18 | 1.37E-18 | 6.21E-01 | 2.67E-18 | 6.71E-20 |
| ## | 33 | 0 | -81 | 0.3 | 0.10 | 0.08 | 0.09 | 1.78E-18 | 1.04E-18 | 5.88E-01 | 1.74E-19 | 1.21E-19 |
| ## | -33 | 0 | -81 | 0.3 | 0.10 | 0.08 | 0.09 | 1.78E-18 | 1.04E-18 | 5.88E-01 | 1.74E-19 | 1.21E-19 |
| ## | 33 | 5 | -81 | 0.3 | 0.05 | 0.97 | 1.42 | 1.60E-18 | 9.70E-19 | 6.06E-01 | 8.39E-20 | 3.01E-18 |
| ## | -33 | 5 | -81 | 0.3 | 0.05 | 0.97 | 1.42 | 1.60E-18 | 9.70E-19 | 6.06E-01 | 8.39E-20 | 3.01E-18 |
| ## | 22 | 22 | -81 | 0.3 | 0.05 | 1.94 | 2.88 | 2.17E-18 | 1.49E-18 | 6.88E-01 | 1.15E-19 | 8.29E-18 |
| ## | -22 | 22 | -81 | 0.3 | 0.05 | 1.94 | 2.88 | 2.17E-18 | 1.49E-18 | 6.88E-01 | 1.15E-19 | 8.29E-18 |
| ## | 0 | 22 | -81 | 0.3 | 0.05 | 1.51 | 2.24 | 2.65E-18 | 1.73E-18 | 6.53E-01 | 1.28E-19 | 7.87E-18 |
| ## | | | Average= | | 0.58 | 0.90 | 1.33 | | | | | |
| ## | | | | | | | | | | | | |
| ## | | | | | | | | | | | | |
| ## | 0 | 0 | 105 | 1 | 0.07 | 0.06 | 0.07 | 9.32E-17 | 5.45E-17 | 5.85E-01 | 6.29E-18 | 5.70E-18 |
| ## | 0 | -10 | 105 | 1 | 0.95 | 0.50 | 0.72 | 9.45E-17 | 5.33E-17 | 5.64E-01 | 8.94E-17 | 5.53E-18 |
| ## | 0 | 10 | 105 | 1 | 0.08 | 0.63 | 0.90 | 7.63E-17 | 4.59E-17 | 6.02E-01 | 5.99E-18 | 9.01E-17 |
| ## | 0 | -22 | 105 | 1 | 1.06 | 0.58 | 0.82 | 8.73E-17 | 5.67E-17 | 6.49E-01 | 9.25E-17 | 8.30E-18 |
| ## | 22 | -22 | 105 | 1 | 1.19 | 0.74 | 0.96 | 7.18E-17 | 4.90E-17 | 6.83E-01 | 8.52E-17 | 2.07E-17 |
| ## | -22 | -22 | 105 | 1 | 1.19 | 0.74 | 0.96 | 7.18E-17 | 4.90E-17 | 6.83E-01 | 8.52E-17 | 2.07E-17 |
| ## | 33 | -5 | 105 | 1 | 1.00 | 0.64 | 0.82 | 5.83E-17 | 4.00E-17 | 6.85E-01 | 5.82E-17 | 1.62E-17 |
| ## | -33 | -5 | 105 | 1 | 1.00 | 0.64 | 0.82 | 5.83E-17 | 4.00E-17 | 6.85E-01 | 5.82E-17 | 1.62E-17 |
| ## | 33 | 0 | 105 | 1 | 0.29 | 0.30 | 0.30 | 5.76E-17 | 3.90E-17 | 6.78E-01 | 1.69E-17 | 1.72E-17 |
| ## | -33 | 0 | 105 | 1 | 0.29 | 0.30 | 0.30 | 5.76E-17 | 3.90E-17 | 6.78E-01 | 1.69E-17 | 1.72E-17 |
| ## | 33 | 5 | 105 | 1 | 0.31 | 0.79 | 1.04 | 5.51E-17 | 3.77E-17 | 6.84E-01 | 1.70E-17 | 7.04E-17 |
| ## | -33 | 5 | 105 | 1 | 0.31 | 0.79 | 1.04 | 5.51E-17 | 3.77E-17 | 6.84E-01 | 1.70E-17 | 7.04E-17 |
| ## | 22 | 22 | 105 | 1 | 0.36 | 0.96 | 1.27 | 5.46E-17 | 4.07E-17 | 7.46E-01 | 1.96E-17 | 8.57E-17 |
| ## | -22 | 22 | 105 | 1 | 0.36 | 0.96 | 1.27 | 5.46E-17 | 4.07E-17 | 7.46E-01 | 1.96E-17 | 8.57E-17 |
| ## | 0 | 22 | 105 | 1 | 0.14 | 0.81 | 1.14 | 6.40E-17 | 4.57E-17 | 7.15E-01 | 9.15E-18 | 9.46E-17 |
| ## | | | Average= | | 0.57 | 0.63 | 0.83 | | | | | |
| ## | | | | | | | | | | | | |
| ## | 0 | -22 | 81 | 1 | 0.94 | 0.53 | 0.73 | 2.41E-16 | 1.62E-16 | 6.74E-01 | 2.25E-16 | 3.15E-17 |
| ## | 22 | -22 | 81 | 1 | 1.15 | 0.72 | 0.93 | 1.57E-16 | 1.06E-16 | 6.79E-01 | 1.80E-16 | 4.51E-17 |
| ## | -22 | -22 | 81 | 1 | 1.15 | 0.72 | 0.93 | 1.57E-16 | 1.06E-16 | 6.79E-01 | 1.80E-16 | 4.51E-17 |
| ## | 33 | -5 | 81 | 1 | 0.79 | 0.53 | 0.66 | 1.09E-16 | 7.73E-17 | 7.07E-01 | 8.66E-17 | 3.03E-17 |
| ## | -33 | -5 | 81 | 1 | 0.79 | 0.53 | 0.66 | 1.09E-16 | 7.73E-17 | 7.07E-01 | 8.66E-17 | 3.03E-17 |
| ## | 33 | 0 | 81 | 1 | 0.44 | 0.41 | 0.42 | 1.06E-16 | 7.88E-17 | 7.43E-01 | 4.64E-17 | 3.98E-17 |
| ## | -33 | 0 | 81 | 1 | 0.44 | 0.41 | 0.42 | 1.06E-16 | 7.88E-17 | 7.43E-01 | 4.64E-17 | 3.98E-17 |
| ## | 33 | 5 | 81 | 1 | 0.30 | 0.83 | 1.10 | 1.02E-16 | 7.61E-17 | 7.48E-01 | 3.04E-17 | 1.39E-16 |
| ## | -33 | 5 | 81 | 1 | 0.30 | 0.83 | 1.10 | 1.02E-16 | 7.61E-17 | 7.48E-01 | 3.04E-17 | 1.39E-16 |
| ## | 22 | 22 | 81 | 1 | 0.34 | 0.95 | 1.25 | 1.12E-16 | 9.10E-17 | 8.14E-01 | 3.75E-17 | 1.75E-16 |
| ## | -22 | 22 | 81 | 1 | 0.34 | 0.95 | 1.25 | 1.12E-16 | 9.10E-17 | 8.14E-01 | 3.75E-17 | 1.75E-16 |
| ## | 0 | 22 | 81 | 1 | 0.19 | 0.78 | 1.07 | 1.69E-16 | 1.32E-16 | 7.80E-01 | 3.25E-17 | 2.30E-16 |
| ## | | | Average= | | 0.60 | 0.68 | 0.88 | | | | | |
| ## | | | | | | | | | | | | |
| ## | 0 | -22 | 61 | 1 | 1.40 | 0.79 | 1.10 | 5.22E-16 | 3.38E-16 | 6.47E-01 | 7.32E-16 | 8.96E-17 |
| ## | 22 | -22 | 61 | 1 | 1.33 | 0.81 | 1.07 | 2.87E-16 | 1.96E-16 | 6.82E-01 | 3.83E-16 | 8.45E-17 |
| ## | -22 | -22 | 61 | 1 | 1.33 | 0.81 | 1.07 | 2.87E-16 | 1.96E-16 | 6.82E-01 | 3.83E-16 | 8.45E-17 |
| ## | 33 | -5 | 61 | 1 | 1.28 | 0.87 | 1.08 | 1.77E-16 | 1.29E-16 | 7.26E-01 | 2.28E-16 | 8.11E-17 |
| ## | -33 | -5 | 61 | 1 | 1.28 | 0.87 | 1.08 | 1.77E-16 | 1.29E-16 | 7.26E-01 | 2.28E-16 | 8.11E-17 |
| ## | 33 | 0 | 61 | 1 | 0.63 | 0.61 | 0.62 | 1.68E-16 | 1.22E-16 | 7.25E-01 | 1.05E-16 | 9.96E-17 |
| ## | -33 | 0 | 61 | 1 | 0.63 | 0.61 | 0.62 | 1.68E-16 | 1.22E-16 | 7.25E-01 | 1.05E-16 | 9.96E-17 |

| | X | Y | Z | Energy | Test 1 | Test 2 | Test 3 | EDE | ED | ED/EDE | Dosimeter Front | Dosimeter Back |
|---|---|---|---|---|---|---|---|---|---|---|---|---|
| ## | 33 | 5 | 61 | 1 | 0.52 | 1.07 | 1.34 | 1.59E-16 | 1.21E-16 | 7.57E-01 | 8.22E-17 | 2.58E-16 |
| ## | -33 | 5 | 61 | 1 | 0.52 | 1.07 | 1.34 | 1.59E-16 | 1.21E-16 | 7.57E-01 | 8.22E-17 | 2.58E-16 |
| ## | 22 | 22 | 61 | 1 | 0.46 | 1.28 | 1.69 | 1.82E-16 | 1.47E-16 | 8.06E-01 | 8.43E-17 | 3.83E-16 |
| ## | -22 | 22 | 61 | 1 | 0.46 | 1.28 | 1.69 | 1.82E-16 | 1.47E-16 | 8.06E-01 | 8.43E-17 | 3.83E-16 |
| ## | 0 | 22 | 61 | 1 | 0.28 | 1.40 | 1.95 | 2.93E-16 | 2.37E-16 | 8.07E-01 | 8.33E-17 | 7.36E-16 |
| ## | | | Average= | | 0.84 | 0.96 | 1.22 | | | | | |
| ## | | | | | | | | | | | | |
| ## | 0 | -22 | 41 | 1 | 6.00 | 3.13 | 4.56 | 5.36E-16 | 3.99E-16 | 7.44E-01 | 3.22E-15 | 1.40E-16 |
| ## | 22 | -22 | 41 | 1 | 1.95 | 1.12 | 1.53 | 3.23E-16 | 2.60E-16 | 8.04E-01 | 6.29E-16 | 9.43E-17 |
| ## | -22 | -22 | 41 | 1 | 1.95 | 1.12 | 1.53 | 3.23E-16 | 2.60E-16 | 8.04E-01 | 6.29E-16 | 9.43E-17 |
| ## | 33 | -5 | 41 | 1 | 1.62 | 1.06 | 1.34 | 2.18E-16 | 1.81E-16 | 8.29E-01 | 3.54E-16 | 1.06E-16 |
| ## | -33 | -5 | 41 | 1 | 1.62 | 1.06 | 1.34 | 2.18E-16 | 1.81E-16 | 8.29E-01 | 3.54E-16 | 1.06E-16 |
| ## | 33 | 0 | 41 | 1 | 0.71 | 0.71 | 0.72 | 2.13E-16 | 1.72E-16 | 8.10E-01 | 1.50E-16 | 1.53E-16 |
| ## | -33 | 0 | 41 | 1 | 0.71 | 0.71 | 0.72 | 2.13E-16 | 1.72E-16 | 8.10E-01 | 1.50E-16 | 1.53E-16 |
| ## | 33 | 5 | 41 | 1 | 0.51 | 1.10 | 1.40 | 2.06E-16 | 1.65E-16 | 8.04E-01 | 1.05E-16 | 3.49E-16 |
| ## | -33 | 5 | 41 | 1 | 0.51 | 1.10 | 1.40 | 2.06E-16 | 1.65E-16 | 8.04E-01 | 1.05E-16 | 3.49E-16 |
| ## | 22 | 22 | 41 | 1 | 0.39 | 1.45 | 1.99 | 2.49E-16 | 1.96E-16 | 7.84E-01 | 9.67E-17 | 6.28E-16 |
| ## | -22 | 22 | 41 | 1 | 0.39 | 1.45 | 1.99 | 2.49E-16 | 1.96E-16 | 7.84E-01 | 9.67E-17 | 6.28E-16 |
| ## | 0 | 22 | 41 | 1 | 0.33 | 4.03 | 5.88 | 4.17E-16 | 3.11E-16 | 7.45E-01 | 1.37E-16 | 3.23E-15 |
| ## | | | Average= | | 1.39 | 1.50 | 2.03 | | | | | |
| ## | | | | | | | | | | | | |
| ## | 0 | -22 | 21 | 1 | 1.69 | 0.94 | 1.31 | 4.34E-16 | 3.92E-16 | 9.04E-01 | 7.31E-16 | 8.72E-17 |
| ## | 22 | -22 | 21 | 1 | 1.50 | 0.88 | 1.19 | 2.57E-16 | 2.46E-16 | 9.55E-01 | 3.86E-16 | 6.65E-17 |
| ## | -22 | -22 | 21 | 1 | 1.50 | 0.88 | 1.19 | 2.57E-16 | 2.46E-16 | 9.55E-01 | 3.86E-16 | 6.65E-17 |
| ## | 33 | -5 | 21 | 1 | 1.49 | 0.95 | 1.22 | 1.72E-16 | 1.59E-16 | 9.28E-01 | 2.56E-16 | 6.98E-17 |
| ## | -33 | -5 | 21 | 1 | 1.49 | 0.95 | 1.22 | 1.72E-16 | 1.59E-16 | 9.28E-01 | 2.56E-16 | 6.98E-17 |
| ## | 33 | 0 | 21 | 1 | 0.62 | 0.63 | 0.63 | 1.65E-16 | 1.54E-16 | 9.34E-01 | 1.03E-16 | 1.04E-16 |
| ## | -33 | 0 | 21 | 1 | 0.62 | 0.63 | 0.63 | 1.65E-16 | 1.54E-16 | 9.34E-01 | 1.03E-16 | 1.04E-16 |
| ## | 33 | 5 | 21 | 1 | 0.43 | 1.02 | 1.31 | 1.61E-16 | 1.48E-16 | 9.22E-01 | 6.92E-17 | 2.59E-16 |
| ## | -33 | 5 | 21 | 1 | 0.43 | 1.02 | 1.31 | 1.61E-16 | 1.48E-16 | 9.22E-01 | 6.92E-17 | 2.59E-16 |
| ## | 22 | 22 | 21 | 1 | 0.32 | 1.12 | 1.51 | 2.04E-16 | 1.82E-16 | 8.94E-01 | 6.59E-17 | 3.88E-16 |
| ## | -22 | 22 | 21 | 1 | 0.32 | 1.12 | 1.51 | 2.04E-16 | 1.82E-16 | 8.94E-01 | 6.59E-17 | 3.88E-16 |
| ## | 0 | 22 | 21 | 1 | 0.26 | 1.23 | 1.71 | 3.35E-16 | 2.85E-16 | 8.51E-01 | 8.68E-17 | 7.34E-16 |
| ## | | | Average= | | 0.89 | 0.95 | 1.23 | | | | | |
| ## | | | | | | | | | | | | |
| ## | 0 | -22 | 6 | 1 | 0.60 | 0.34 | 0.47 | 4.82E-16 | 4.01E-16 | 8.31E-01 | 2.89E-16 | 4.11E-17 |
| ## | 22 | -22 | 6 | 1 | 0.91 | 0.53 | 0.72 | 2.35E-16 | 2.09E-16 | 8.88E-01 | 2.13E-16 | 3.67E-17 |
| ## | -22 | -22 | 6 | 1 | 0.91 | 0.53 | 0.72 | 2.35E-16 | 2.09E-16 | 8.88E-01 | 2.13E-16 | 3.67E-17 |
| ## | 33 | -5 | 6 | 1 | 1.18 | 0.72 | 0.95 | 1.35E-16 | 1.24E-16 | 9.23E-01 | 1.59E-16 | 3.56E-17 |
| ## | -33 | -5 | 6 | 1 | 1.18 | 0.72 | 0.95 | 1.35E-16 | 1.24E-16 | 9.23E-01 | 1.59E-16 | 3.56E-17 |
| ## | 33 | 0 | 6 | 1 | 0.44 | 0.44 | 0.44 | 1.24E-16 | 1.14E-16 | 9.18E-01 | 5.48E-17 | 5.52E-17 |
| ## | -33 | 0 | 6 | 1 | 0.44 | 0.44 | 0.44 | 1.24E-16 | 1.14E-16 | 9.18E-01 | 5.48E-17 | 5.52E-17 |
| ## | 33 | 5 | 6 | 1 | 0.30 | 0.83 | 1.09 | 1.20E-16 | 1.10E-16 | 9.16E-01 | 3.62E-17 | 1.62E-16 |
| ## | -33 | 5 | 6 | 1 | 0.30 | 0.83 | 1.09 | 1.20E-16 | 1.10E-16 | 9.16E-01 | 3.62E-17 | 1.62E-16 |
| ## | 22 | 22 | 6 | 1 | 0.25 | 0.83 | 1.12 | 1.54E-16 | 1.42E-16 | 9.23E-01 | 3.89E-17 | 2.17E-16 |
| ## | -22 | 22 | 6 | 1 | 0.25 | 0.83 | 1.12 | 1.54E-16 | 1.42E-16 | 9.23E-01 | 3.89E-17 | 2.17E-16 |
| ## | 0 | 22 | 6 | 1 | 0.16 | 0.66 | 0.90 | 2.51E-16 | 2.17E-16 | 8.66E-01 | 4.11E-17 | 2.87E-16 |
| ## | | | Average= | | 0.58 | 0.64 | 0.84 | | | | | |
| ## | | | | | | | | | | | | |
| ## | 0 | -22 | -21 | 1 | 0.56 | 0.31 | 0.43 | 1.82E-16 | 1.44E-16 | 7.93E-01 | 1.02E-16 | 9.20E-18 |
| ## | 22 | -22 | -21 | 1 | 0.79 | 0.44 | 0.61 | 1.17E-16 | 9.58E-17 | 8.20E-01 | 9.22E-17 | 1.02E-17 |
| ## | -22 | -22 | -21 | 1 | 0.79 | 0.44 | 0.61 | 1.17E-16 | 9.58E-17 | 8.20E-01 | 9.22E-17 | 1.02E-17 |
| ## | 33 | -5 | -21 | 1 | 1.25 | 0.69 | 0.97 | 6.04E-17 | 4.87E-17 | 8.07E-01 | 7.52E-17 | 8.27E-18 |
| ## | -33 | -5 | -21 | 1 | 1.25 | 0.69 | 0.97 | 6.04E-17 | 4.87E-17 | 8.07E-01 | 7.52E-17 | 8.27E-18 |
| ## | 33 | 0 | -21 | 1 | 0.26 | 0.26 | 0.26 | 5.68E-17 | 4.52E-17 | 7.96E-01 | 1.48E-17 | 1.46E-17 |
| ## | -33 | 0 | -21 | 1 | 0.26 | 0.26 | 0.26 | 5.68E-17 | 4.52E-17 | 7.96E-01 | 1.48E-17 | 1.46E-17 |
| ## | 33 | 5 | -21 | 1 | 0.15 | 0.77 | 1.08 | 5.38E-17 | 4.32E-17 | 8.03E-01 | 8.01E-18 | 7.48E-17 |
| ## | -33 | 5 | -21 | 1 | 0.15 | 0.77 | 1.08 | 5.38E-17 | 4.32E-17 | 8.03E-01 | 8.01E-18 | 7.48E-17 |
| ## | 22 | 22 | -21 | 1 | 0.16 | 0.75 | 1.05 | 6.59E-17 | 5.53E-17 | 8.39E-01 | 1.03E-17 | 8.85E-17 |
| ## | -22 | 22 | -21 | 1 | 0.16 | 0.75 | 1.05 | 6.59E-17 | 5.53E-17 | 8.39E-01 | 1.03E-17 | 8.85E-17 |
| ## | 0 | 22 | -21 | 1 | 0.09 | 0.53 | 0.75 | 1.05E-16 | 8.34E-17 | 7.97E-01 | 9.87E-18 | 1.01E-16 |
| ## | | | Average= | | 0.49 | 0.55 | 0.76 | | | | | |

| | X | Y | Z | Energy | Test 1 | Test 2 | Test 3 | EDE | ED | ED/EDE | Dosimeter Front | Dosimeter Back |
|---|---|---|---|---|---|---|---|---|---|---|---|---|
| ## | | | | | | | | | | | | |
| ## | 0 | -22 | -41 | 1 | 0.79 | 0.42 | 0.61 | 7.66E-17 | 5.73E-17 | 7.48E-01 | 6.06E-17 | 4.10E-18 |
| ## | 22 | -22 | -41 | 1 | 0.93 | 0.50 | 0.71 | 5.92E-17 | 4.61E-17 | 7.77E-01 | 5.52E-17 | 3.67E-18 |
| ## | -22 | -22 | -41 | 1 | 0.93 | 0.50 | 0.71 | 5.92E-17 | 4.61E-17 | 7.77E-01 | 5.52E-17 | 3.67E-18 |
| ## | 33 | -5 | -41 | 1 | 1.48 | 0.80 | 1.14 | 3.07E-17 | 2.29E-17 | 7.44E-01 | 4.54E-17 | 3.50E-18 |
| ## | -33 | -5 | -41 | 1 | 1.48 | 0.80 | 1.14 | 3.07E-17 | 2.29E-17 | 7.44E-01 | 4.54E-17 | 3.50E-18 |
| ## | 33 | 0 | -41 | 1 | 0.21 | 0.20 | 0.21 | 2.82E-17 | 2.07E-17 | 7.34E-01 | 5.98E-18 | 5.36E-18 |
| ## | -33 | 0 | -41 | 1 | 0.21 | 0.20 | 0.21 | 2.82E-17 | 2.07E-17 | 7.34E-01 | 5.98E-18 | 5.36E-18 |
| ## | 33 | 5 | -41 | 1 | 0.14 | 0.96 | 1.37 | 2.66E-17 | 1.97E-17 | 7.39E-01 | 3.66E-18 | 4.75E-17 |
| ## | -33 | 5 | -41 | 1 | 0.14 | 0.96 | 1.37 | 2.66E-17 | 1.97E-17 | 7.39E-01 | 3.66E-18 | 4.75E-17 |
| ## | 22 | 22 | -41 | 1 | 0.11 | 0.86 | 1.23 | 3.35E-17 | 2.61E-17 | 7.78E-01 | 3.76E-18 | 5.36E-17 |
| ## | -22 | 22 | -41 | 1 | 0.11 | 0.86 | 1.23 | 3.35E-17 | 2.61E-17 | 7.78E-01 | 3.76E-18 | 5.36E-17 |
| ## | 0 | 22 | -41 | 1 | 0.12 | 0.63 | 0.89 | 5.06E-17 | 3.76E-17 | 7.42E-01 | 5.93E-18 | 5.84E-17 |
| ## | | | Average= | | 0.55 | 0.64 | 0.90 | | | | | |
| ## | | | | | | | | | | | | |
| ## | 0 | -22 | -61 | 1 | 0.98 | 0.52 | 0.75 | 3.99E-17 | 2.84E-17 | 7.11E-01 | 3.91E-17 | 2.04E-18 |
| ## | 22 | -22 | -61 | 1 | 1.03 | 0.54 | 0.79 | 3.33E-17 | 2.49E-17 | 7.45E-01 | 3.45E-17 | 1.41E-18 |
| ## | -22 | -22 | -61 | 1 | 1.03 | 0.54 | 0.79 | 3.33E-17 | 2.49E-17 | 7.45E-01 | 3.45E-17 | 1.41E-18 |
| ## | 33 | -5 | -61 | 1 | 1.34 | 0.72 | 1.03 | 1.68E-17 | 1.18E-17 | 7.02E-01 | 2.25E-17 | 1.69E-18 |
| ## | -33 | -5 | -61 | 1 | 1.34 | 0.72 | 1.03 | 1.68E-17 | 1.18E-17 | 7.02E-01 | 2.25E-17 | 1.69E-18 |
| ## | 33 | 0 | -61 | 1 | 0.16 | 0.17 | 0.18 | 1.50E-17 | 1.03E-17 | 6.90E-01 | 2.37E-18 | 2.80E-18 |
| ## | -33 | 0 | -61 | 1 | 0.16 | 0.17 | 0.18 | 1.50E-17 | 1.03E-17 | 6.90E-01 | 2.37E-18 | 2.80E-18 |
| ## | 33 | 5 | -61 | 1 | 0.12 | 0.84 | 1.20 | 1.41E-17 | 9.90E-18 | 7.01E-01 | 1.75E-18 | 2.20E-17 |
| ## | -33 | 5 | -61 | 1 | 0.12 | 0.84 | 1.20 | 1.41E-17 | 9.90E-18 | 7.01E-01 | 1.75E-18 | 2.20E-17 |
| ## | 22 | 22 | -61 | 1 | 0.08 | 1.04 | 1.51 | 1.81E-17 | 1.35E-17 | 7.50E-01 | 1.49E-18 | 3.59E-17 |
| ## | -22 | 22 | -61 | 1 | 0.08 | 1.04 | 1.51 | 1.81E-17 | 1.35E-17 | 7.50E-01 | 1.49E-18 | 3.59E-17 |
| ## | 0 | 22 | -61 | 1 | 0.14 | 0.84 | 1.19 | 2.49E-17 | 1.77E-17 | 7.09E-01 | 3.57E-18 | 3.83E-17 |
| ## | | | Average= | | 0.55 | 0.66 | 0.95 | | | | | |
| ## | | | | | | | | | | | | |
| ## | 0 | -22 | -81 | 1 | 1.10 | 0.57 | 0.84 | 2.24E-17 | 1.56E-17 | 6.95E-01 | 2.46E-17 | 1.08E-18 |
| ## | 22 | -22 | -81 | 1 | 1.27 | 0.65 | 0.96 | 2.00E-17 | 1.45E-17 | 7.27E-01 | 2.53E-17 | 6.68E-19 |
| ## | -22 | -22 | -81 | 1 | 1.27 | 0.65 | 0.96 | 2.00E-17 | 1.45E-17 | 7.27E-01 | 2.53E-17 | 6.68E-19 |
| ## | 33 | -5 | -81 | 1 | 1.28 | 0.68 | 0.98 | 9.97E-18 | 6.82E-18 | 6.84E-01 | 1.28E-17 | 7.77E-19 |
| ## | -33 | -5 | -81 | 1 | 1.28 | 0.68 | 0.98 | 9.97E-18 | 6.82E-18 | 6.84E-01 | 1.28E-17 | 7.77E-19 |
| ## | 33 | 0 | -81 | 1 | 0.21 | 0.21 | 0.22 | 8.47E-18 | 5.67E-18 | 6.69E-01 | 1.75E-18 | 1.86E-18 |
| ## | -33 | 0 | -81 | 1 | 0.21 | 0.21 | 0.22 | 8.47E-18 | 5.67E-18 | 6.69E-01 | 1.75E-18 | 1.86E-18 |
| ## | 33 | 5 | -81 | 1 | 0.18 | 0.97 | 1.36 | 7.72E-18 | 5.28E-18 | 6.83E-01 | 1.39E-18 | 1.36E-17 |
| ## | -33 | 5 | -81 | 1 | 0.18 | 0.97 | 1.36 | 7.72E-18 | 5.28E-18 | 6.83E-01 | 1.39E-18 | 1.36E-17 |
| ## | 22 | 22 | -81 | 1 | 0.08 | 1.42 | 2.09 | 9.77E-18 | 7.22E-18 | 7.39E-01 | 7.98E-19 | 2.69E-17 |
| ## | -22 | 22 | -81 | 1 | 0.08 | 1.42 | 2.09 | 9.77E-18 | 7.22E-18 | 7.39E-01 | 7.98E-19 | 2.69E-17 |
| ## | 0 | 22 | -81 | 1 | 0.14 | 1.11 | 1.60 | 1.21E-17 | 8.50E-18 | 7.01E-01 | 1.73E-18 | 2.52E-17 |
| ## | | | Average= | | 0.61 | 0.80 | 1.14 | | | | | |
| ## | | | | | | | | | | | | |
| ## | | | | | | | | | | | | |
| ## | 0 | 0 | 105 | 1.5 | 0.10 | 0.09 | 0.10 | 1.38E-16 | 8.29E-17 | 5.99E-01 | 1.42E-17 | 1.15E-17 |
| ## | 0 | -10 | 105 | 1.5 | 0.90 | 0.49 | 0.69 | 1.38E-16 | 8.03E-17 | 5.81E-01 | 1.24E-16 | 1.14E-17 |
| ## | 0 | 10 | 105 | 1.5 | 0.11 | 0.60 | 0.85 | 1.14E-16 | 7.02E-17 | 6.17E-01 | 1.25E-17 | 1.25E-16 |
| ## | 0 | -22 | 105 | 1.5 | 1.00 | 0.56 | 0.78 | 1.26E-16 | 8.40E-17 | 6.68E-01 | 1.25E-16 | 1.52E-17 |
| ## | 22 | -22 | 105 | 1.5 | 1.12 | 0.73 | 0.93 | 1.03E-16 | 7.21E-17 | 7.00E-01 | 1.15E-16 | 3.54E-17 |
| ## | -22 | -22 | 105 | 1.5 | 1.12 | 0.73 | 0.93 | 1.03E-16 | 7.21E-17 | 7.00E-01 | 1.15E-16 | 3.54E-17 |
| ## | 33 | -5 | 105 | 1.5 | 0.98 | 0.66 | 0.82 | 8.52E-17 | 5.97E-17 | 7.01E-01 | 8.37E-17 | 2.87E-17 |
| ## | -33 | -5 | 105 | 1.5 | 0.98 | 0.66 | 0.82 | 8.52E-17 | 5.97E-17 | 7.01E-01 | 8.37E-17 | 2.87E-17 |
| ## | 33 | 0 | 105 | 1.5 | 0.34 | 0.35 | 0.35 | 8.40E-17 | 5.82E-17 | 6.93E-01 | 2.87E-17 | 2.96E-17 |
| ## | -33 | 0 | 105 | 1.5 | 0.34 | 0.35 | 0.35 | 8.40E-17 | 5.82E-17 | 6.93E-01 | 2.87E-17 | 2.96E-17 |
| ## | 33 | 5 | 105 | 1.5 | 0.36 | 0.78 | 0.99 | 8.06E-17 | 5.64E-17 | 6.99E-01 | 2.90E-17 | 9.70E-17 |
| ## | -33 | 5 | 105 | 1.5 | 0.36 | 0.78 | 0.99 | 8.06E-17 | 5.64E-17 | 6.99E-01 | 2.90E-17 | 9.70E-17 |
| ## | 22 | 22 | 105 | 1.5 | 0.43 | 0.93 | 1.18 | 8.11E-17 | 6.13E-17 | 7.56E-01 | 3.45E-17 | 1.16E-16 |
| ## | -22 | 22 | 105 | 1.5 | 0.43 | 0.93 | 1.18 | 8.11E-17 | 6.13E-17 | 7.56E-01 | 3.45E-17 | 1.16E-16 |
| ## | 0 | 22 | 105 | 1.5 | 0.17 | 0.76 | 1.05 | 9.50E-17 | 6.92E-17 | 7.28E-01 | 1.66E-17 | 1.27E-16 |
| ## | | | Average= | | 0.58 | 0.63 | 0.80 | | | | | |
| ## | | | | | | | | | | | | |
| ## | 0 | -22 | 81 | 1.5 | 0.89 | 0.53 | 0.71 | 3.39E-16 | 2.32E-16 | 6.84E-01 | 3.03E-16 | 5.55E-17 |

| | X | Y | Z | Energy | Test 1 | Test 2 | Test 3 | EDE | ED | ED/EDE | Dosimeter Front | Dosimeter Back |
|---|---|---|---|---|---|---|---|---|---|---|---|---|
| ## | 22 | -22 | 81 | 1.5 | 1.09 | 0.71 | 0.90 | 2.21E-16 | 1.53E-16 | 6.92E-01 | 2.42E-16 | 7.36E-17 |
| ## | -22 | -22 | 81 | 1.5 | 1.09 | 0.71 | 0.90 | 2.21E-16 | 1.53E-16 | 6.92E-01 | 2.42E-16 | 7.36E-17 |
| ## | 33 | -5 | 81 | 1.5 | 0.83 | 0.59 | 0.71 | 1.59E-16 | 1.14E-16 | 7.19E-01 | 1.32E-16 | 5.47E-17 |
| ## | -33 | -5 | 81 | 1.5 | 0.83 | 0.59 | 0.71 | 1.59E-16 | 1.14E-16 | 7.19E-01 | 1.32E-16 | 5.47E-17 |
| ## | 33 | 0 | 81 | 1.5 | 0.48 | 0.46 | 0.47 | 1.55E-16 | 1.16E-16 | 7.52E-01 | 7.47E-17 | 6.67E-17 |
| ## | -33 | 0 | 81 | 1.5 | 0.48 | 0.46 | 0.47 | 1.55E-16 | 1.16E-16 | 7.52E-01 | 7.47E-17 | 6.67E-17 |
| ## | 33 | 5 | 81 | 1.5 | 0.35 | 0.82 | 1.05 | 1.49E-16 | 1.13E-16 | 7.56E-01 | 5.18E-17 | 1.92E-16 |
| ## | -33 | 5 | 81 | 1.5 | 0.35 | 0.82 | 1.05 | 1.49E-16 | 1.13E-16 | 7.56E-01 | 5.18E-17 | 1.92E-16 |
| ## | 22 | 22 | 81 | 1.5 | 0.37 | 0.90 | 1.17 | 1.62E-16 | 1.33E-16 | 8.18E-01 | 5.99E-17 | 2.34E-16 |
| ## | -22 | 22 | 81 | 1.5 | 0.37 | 0.90 | 1.17 | 1.62E-16 | 1.33E-16 | 8.18E-01 | 5.99E-17 | 2.34E-16 |
| ## | 0 | 22 | 81 | 1.5 | 0.22 | 0.74 | 1.00 | 2.45E-16 | 1.92E-16 | 7.83E-01 | 5.44E-17 | 3.09E-16 |
| ## | | | Average= | | 0.61 | 0.69 | 0.86 | | | | | |
| ## | | | | | | | | | | | | |
| ## | 0 | -22 | 61 | 1.5 | 1.36 | 0.78 | 1.07 | 7.22E-16 | 4.73E-16 | 6.55E-01 | 9.85E-16 | 1.40E-16 |
| ## | 22 | -22 | 61 | 1.5 | 1.28 | 0.81 | 1.04 | 4.01E-16 | 2.77E-16 | 6.91E-01 | 5.13E-16 | 1.33E-16 |
| ## | -22 | -22 | 61 | 1.5 | 1.28 | 0.81 | 1.04 | 4.01E-16 | 2.77E-16 | 6.91E-01 | 5.13E-16 | 1.33E-16 |
| ## | 33 | -5 | 61 | 1.5 | 1.23 | 0.87 | 1.05 | 2.58E-16 | 1.91E-16 | 7.39E-01 | 3.18E-16 | 1.30E-16 |
| ## | -33 | -5 | 61 | 1.5 | 1.23 | 0.87 | 1.05 | 2.58E-16 | 1.91E-16 | 7.39E-01 | 3.18E-16 | 1.30E-16 |
| ## | 33 | 0 | 61 | 1.5 | 0.67 | 0.66 | 0.66 | 2.45E-16 | 1.81E-16 | 7.41E-01 | 1.64E-16 | 1.57E-16 |
| ## | -33 | 0 | 61 | 1.5 | 0.67 | 0.66 | 0.66 | 2.45E-16 | 1.81E-16 | 7.41E-01 | 1.64E-16 | 1.57E-16 |
| ## | 33 | 5 | 61 | 1.5 | 0.58 | 1.04 | 1.27 | 2.33E-16 | 1.80E-16 | 7.72E-01 | 1.34E-16 | 3.49E-16 |
| ## | -33 | 5 | 61 | 1.5 | 0.58 | 1.04 | 1.27 | 2.33E-16 | 1.80E-16 | 7.72E-01 | 1.34E-16 | 3.49E-16 |
| ## | 22 | 22 | 61 | 1.5 | 0.50 | 1.24 | 1.61 | 2.61E-16 | 2.12E-16 | 8.14E-01 | 1.31E-16 | 5.15E-16 |
| ## | -22 | 22 | 61 | 1.5 | 0.50 | 1.24 | 1.61 | 2.61E-16 | 2.12E-16 | 8.14E-01 | 1.31E-16 | 5.15E-16 |
| ## | 0 | 22 | 61 | 1.5 | 0.33 | 1.36 | 1.87 | 4.15E-16 | 3.37E-16 | 8.13E-01 | 1.35E-16 | 9.92E-16 |
| ## | | | Average= | | 0.85 | 0.95 | 1.18 | | | | | |
| ## | | | | | | | | | | | | |
| ## | 0 | -22 | 41 | 1.5 | 5.91 | 3.10 | 4.50 | 7.42E-16 | 5.57E-16 | 7.51E-01 | 4.38E-15 | 2.20E-16 |
| ## | 22 | -22 | 41 | 1.5 | 1.88 | 1.10 | 1.49 | 4.51E-16 | 3.65E-16 | 8.10E-01 | 8.49E-16 | 1.44E-16 |
| ## | -22 | -22 | 41 | 1.5 | 1.88 | 1.10 | 1.49 | 4.51E-16 | 3.65E-16 | 8.10E-01 | 8.49E-16 | 1.44E-16 |
| ## | 33 | -5 | 41 | 1.5 | 1.52 | 1.03 | 1.27 | 3.16E-16 | 2.65E-16 | 8.39E-01 | 4.80E-16 | 1.69E-16 |
| ## | -33 | -5 | 41 | 1.5 | 1.52 | 1.03 | 1.27 | 3.16E-16 | 2.65E-16 | 8.39E-01 | 4.80E-16 | 1.69E-16 |
| ## | 33 | 0 | 41 | 1.5 | 0.74 | 0.75 | 0.75 | 3.10E-16 | 2.54E-16 | 8.22E-01 | 2.29E-16 | 2.33E-16 |
| ## | -33 | 0 | 41 | 1.5 | 0.74 | 0.75 | 0.75 | 3.10E-16 | 2.54E-16 | 8.22E-01 | 2.29E-16 | 2.33E-16 |
| ## | 33 | 5 | 41 | 1.5 | 0.56 | 1.07 | 1.32 | 2.99E-16 | 2.44E-16 | 8.15E-01 | 1.67E-16 | 4.72E-16 |
| ## | -33 | 5 | 41 | 1.5 | 0.56 | 1.07 | 1.32 | 2.99E-16 | 2.44E-16 | 8.15E-01 | 1.67E-16 | 4.72E-16 |
| ## | 22 | 22 | 41 | 1.5 | 0.43 | 1.41 | 1.91 | 3.52E-16 | 2.80E-16 | 7.95E-01 | 1.50E-16 | 8.47E-16 |
| ## | -22 | 22 | 41 | 1.5 | 0.43 | 1.41 | 1.91 | 3.52E-16 | 2.80E-16 | 7.95E-01 | 1.50E-16 | 8.47E-16 |
| ## | 0 | 22 | 41 | 1.5 | 0.36 | 3.95 | 5.74 | 5.83E-16 | 4.41E-16 | 7.55E-01 | 2.12E-16 | 4.39E-15 |
| ## | | | Average= | | 1.38 | 1.48 | 1.98 | | | | | |
| ## | | | | | | | | | | | | |
| ## | 0 | -22 | 21 | 1.5 | 1.64 | 0.93 | 1.29 | 6.02E-16 | 5.47E-16 | 9.09E-01 | 9.86E-16 | 1.35E-16 |
| ## | 22 | -22 | 21 | 1.5 | 1.44 | 0.87 | 1.15 | 3.60E-16 | 3.45E-16 | 9.59E-01 | 5.17E-16 | 1.05E-16 |
| ## | -22 | -22 | 21 | 1.5 | 1.44 | 0.87 | 1.15 | 3.60E-16 | 3.45E-16 | 9.59E-01 | 5.17E-16 | 1.05E-16 |
| ## | 33 | -5 | 21 | 1.5 | 1.37 | 0.92 | 1.14 | 2.53E-16 | 2.36E-16 | 9.34E-01 | 3.45E-16 | 1.18E-16 |
| ## | -33 | -5 | 21 | 1.5 | 1.37 | 0.92 | 1.14 | 2.53E-16 | 2.36E-16 | 9.34E-01 | 3.45E-16 | 1.18E-16 |
| ## | 33 | 0 | 21 | 1.5 | 0.66 | 0.66 | 0.67 | 2.44E-16 | 2.30E-16 | 9.42E-01 | 1.60E-16 | 1.63E-16 |
| ## | -33 | 0 | 21 | 1.5 | 0.66 | 0.66 | 0.67 | 2.44E-16 | 2.30E-16 | 9.42E-01 | 1.60E-16 | 1.63E-16 |
| ## | 33 | 5 | 21 | 1.5 | 0.50 | 0.99 | 1.23 | 2.38E-16 | 2.22E-16 | 9.31E-01 | 1.19E-16 | 3.52E-16 |
| ## | -33 | 5 | 21 | 1.5 | 0.50 | 0.99 | 1.23 | 2.38E-16 | 2.22E-16 | 9.31E-01 | 1.19E-16 | 3.52E-16 |
| ## | 22 | 22 | 21 | 1.5 | 0.36 | 1.08 | 1.44 | 2.91E-16 | 2.62E-16 | 9.03E-01 | 1.06E-16 | 5.23E-16 |
| ## | -22 | 22 | 21 | 1.5 | 0.36 | 1.08 | 1.44 | 2.91E-16 | 2.62E-16 | 9.03E-01 | 1.06E-16 | 5.23E-16 |
| ## | 0 | 22 | 21 | 1.5 | 0.29 | 1.19 | 1.64 | 4.73E-16 | 4.07E-16 | 8.60E-01 | 1.39E-16 | 9.88E-16 |
| ## | | | Average= | | 0.88 | 0.93 | 1.18 | | | | | |
| ## | | | | | | | | | | | | |
| ## | 0 | -22 | 6 | 1.5 | 0.58 | 0.34 | 0.46 | 6.66E-16 | 5.56E-16 | 8.35E-01 | 3.86E-16 | 7.21E-17 |
| ## | 22 | -22 | 6 | 1.5 | 0.87 | 0.53 | 0.70 | 3.28E-16 | 2.93E-16 | 8.93E-01 | 2.86E-16 | 6.07E-17 |
| ## | -22 | -22 | 6 | 1.5 | 0.87 | 0.53 | 0.70 | 3.28E-16 | 2.93E-16 | 8.93E-01 | 2.86E-16 | 6.07E-17 |
| ## | 33 | -5 | 6 | 1.5 | 1.10 | 0.71 | 0.90 | 2.01E-16 | 1.86E-16 | 9.27E-01 | 2.21E-16 | 6.32E-17 |
| ## | -33 | -5 | 6 | 1.5 | 1.10 | 0.71 | 0.90 | 2.01E-16 | 1.86E-16 | 9.27E-01 | 2.21E-16 | 6.32E-17 |
| ## | 33 | 0 | 6 | 1.5 | 0.50 | 0.49 | 0.49 | 1.87E-16 | 1.73E-16 | 9.24E-01 | 9.29E-17 | 9.12E-17 |
| ## | -33 | 0 | 6 | 1.5 | 0.50 | 0.49 | 0.49 | 1.87E-16 | 1.73E-16 | 9.24E-01 | 9.29E-17 | 9.12E-17 |

| | X | Y | Z | Energy | Test 1 | Test 2 | Test 3 | EDE | ED | ED/EDE | Dosimeter Front | Dosimeter Back |
|---|---|---|---|---|---|---|---|---|---|---|---|---|
| ## | 33 | 5 | 6 | 1.5 | 0.36 | 0.80 | 1.02 | 1.81E-16 | 1.67E-16 | 9.22E-01 | 6.45E-17 | 2.24E-16 |
| ## | -33 | 5 | 6 | 1.5 | 0.36 | 0.80 | 1.02 | 1.81E-16 | 1.67E-16 | 9.22E-01 | 6.45E-17 | 2.24E-16 |
| ## | 22 | 22 | 6 | 1.5 | 0.29 | 0.80 | 1.05 | 2.22E-16 | 2.07E-16 | 9.31E-01 | 6.56E-17 | 2.90E-16 |
| ## | -22 | 22 | 6 | 1.5 | 0.29 | 0.80 | 1.05 | 2.22E-16 | 2.07E-16 | 9.31E-01 | 6.56E-17 | 2.90E-16 |
| ## | 0 | 22 | 6 | 1.5 | 0.19 | 0.63 | 0.85 | 3.58E-16 | 3.12E-16 | 8.73E-01 | 6.90E-17 | 3.84E-16 |
| ## | | | Average= | | 0.58 | 0.64 | 0.80 | | | | | |
| ## | | | | | | | | | | | | |
| ## | 0 | -22 | -21 | 1.5 | 0.54 | 0.30 | 0.42 | 2.54E-16 | 2.03E-16 | 8.01E-01 | 1.37E-16 | 1.60E-17 |
| ## | 22 | -22 | -21 | 1.5 | 0.74 | 0.43 | 0.59 | 1.65E-16 | 1.37E-16 | 8.29E-01 | 1.23E-16 | 1.81E-17 |
| ## | -22 | -22 | -21 | 1.5 | 0.74 | 0.43 | 0.59 | 1.65E-16 | 1.37E-16 | 8.29E-01 | 1.23E-16 | 1.81E-17 |
| ## | 33 | -5 | -21 | 1.5 | 1.12 | 0.65 | 0.88 | 9.32E-17 | 7.66E-17 | 8.22E-01 | 1.04E-16 | 1.77E-17 |
| ## | -33 | -5 | -21 | 1.5 | 1.12 | 0.65 | 0.88 | 9.32E-17 | 7.66E-17 | 8.22E-01 | 1.04E-16 | 1.77E-17 |
| ## | 33 | 0 | -21 | 1.5 | 0.31 | 0.31 | 0.31 | 8.89E-17 | 7.22E-17 | 8.12E-01 | 2.72E-17 | 2.72E-17 |
| ## | -33 | 0 | -21 | 1.5 | 0.31 | 0.31 | 0.31 | 8.89E-17 | 7.22E-17 | 8.12E-01 | 2.72E-17 | 2.72E-17 |
| ## | 33 | 5 | -21 | 1.5 | 0.20 | 0.72 | 0.98 | 8.39E-17 | 6.88E-17 | 8.20E-01 | 1.68E-17 | 1.04E-16 |
| ## | -33 | 5 | -21 | 1.5 | 0.20 | 0.72 | 0.98 | 8.39E-17 | 6.88E-17 | 8.20E-01 | 1.68E-17 | 1.04E-16 |
| ## | 22 | 22 | -21 | 1.5 | 0.18 | 0.68 | 0.94 | 9.99E-17 | 8.50E-17 | 8.51E-01 | 1.82E-17 | 1.19E-16 |
| ## | -22 | 22 | -21 | 1.5 | 0.18 | 0.68 | 0.94 | 9.99E-17 | 8.50E-17 | 8.51E-01 | 1.82E-17 | 1.19E-16 |
| ## | 0 | 22 | -21 | 1.5 | 0.13 | 0.51 | 0.70 | 1.53E-16 | 1.23E-16 | 8.07E-01 | 1.93E-17 | 1.36E-16 |
| ## | | | Average= | | 0.48 | 0.53 | 0.71 | | | | | |
| ## | | | | | | | | | | | | |
| ## | 0 | -22 | -41 | 1.5 | 0.77 | 0.42 | 0.59 | 1.08E-16 | 8.22E-17 | 7.59E-01 | 8.33E-17 | 7.42E-18 |
| ## | 22 | -22 | -41 | 1.5 | 0.88 | 0.48 | 0.68 | 8.50E-17 | 6.73E-17 | 7.92E-01 | 7.48E-17 | 7.67E-18 |
| ## | -22 | -22 | -41 | 1.5 | 0.88 | 0.48 | 0.68 | 8.50E-17 | 6.73E-17 | 7.92E-01 | 7.48E-17 | 7.67E-18 |
| ## | 33 | -5 | -41 | 1.5 | 1.32 | 0.74 | 1.03 | 4.85E-17 | 3.72E-17 | 7.67E-01 | 6.42E-17 | 7.82E-18 |
| ## | -33 | -5 | -41 | 1.5 | 1.32 | 0.74 | 1.03 | 4.85E-17 | 3.72E-17 | 7.67E-01 | 6.42E-17 | 7.82E-18 |
| ## | 33 | 0 | -41 | 1.5 | 0.24 | 0.24 | 0.24 | 4.50E-17 | 3.41E-17 | 7.57E-01 | 1.10E-17 | 1.07E-17 |
| ## | -33 | 0 | -41 | 1.5 | 0.24 | 0.24 | 0.24 | 4.50E-17 | 3.41E-17 | 7.57E-01 | 1.10E-17 | 1.07E-17 |
| ## | 33 | 5 | -41 | 1.5 | 0.19 | 0.88 | 1.22 | 4.28E-17 | 3.27E-17 | 7.65E-01 | 8.16E-18 | 6.69E-17 |
| ## | -33 | 5 | -41 | 1.5 | 0.19 | 0.88 | 1.22 | 4.28E-17 | 3.27E-17 | 7.65E-01 | 8.16E-18 | 6.69E-17 |
| ## | 22 | 22 | -41 | 1.5 | 0.14 | 0.77 | 1.09 | 5.18E-17 | 4.13E-17 | 7.98E-01 | 7.03E-18 | 7.30E-17 |
| ## | -22 | 22 | -41 | 1.5 | 0.14 | 0.77 | 1.09 | 5.18E-17 | 4.13E-17 | 7.98E-01 | 7.03E-18 | 7.30E-17 |
| ## | 0 | 22 | -41 | 1.5 | 0.15 | 0.59 | 0.81 | 7.60E-17 | 5.75E-17 | 7.57E-01 | 1.12E-17 | 7.82E-17 |
| ## | | | Average= | | 0.54 | 0.60 | 0.83 | | | | | |
| ## | | | | | | | | | | | | |
| ## | 0 | -22 | -61 | 1.5 | 0.93 | 0.51 | 0.72 | 5.76E-17 | 4.18E-17 | 7.25E-01 | 5.39E-17 | 5.27E-18 |
| ## | 22 | -22 | -61 | 1.5 | 0.97 | 0.52 | 0.74 | 4.82E-17 | 3.68E-17 | 7.62E-01 | 4.68E-17 | 3.17E-18 |
| ## | -22 | -22 | -61 | 1.5 | 0.97 | 0.52 | 0.74 | 4.82E-17 | 3.68E-17 | 7.62E-01 | 4.68E-17 | 3.17E-18 |
| ## | 33 | -5 | -61 | 1.5 | 1.25 | 0.69 | 0.97 | 2.66E-17 | 1.94E-17 | 7.28E-01 | 3.32E-17 | 3.60E-18 |
| ## | -33 | -5 | -61 | 1.5 | 1.25 | 0.69 | 0.97 | 2.66E-17 | 1.94E-17 | 7.28E-01 | 3.32E-17 | 3.60E-18 |
| ## | 33 | 0 | -61 | 1.5 | 0.22 | 0.22 | 0.22 | 2.44E-17 | 1.76E-17 | 7.20E-01 | 5.37E-18 | 5.27E-18 |
| ## | -33 | 0 | -61 | 1.5 | 0.22 | 0.22 | 0.22 | 2.44E-17 | 1.76E-17 | 7.20E-01 | 5.37E-18 | 5.27E-18 |
| ## | 33 | 5 | -61 | 1.5 | 0.19 | 0.81 | 1.12 | 2.29E-17 | 1.67E-17 | 7.31E-01 | 4.34E-18 | 3.29E-17 |
| ## | -33 | 5 | -61 | 1.5 | 0.19 | 0.81 | 1.12 | 2.29E-17 | 1.67E-17 | 7.31E-01 | 4.34E-18 | 3.29E-17 |
| ## | 22 | 22 | -61 | 1.5 | 0.13 | 0.93 | 1.33 | 2.85E-17 | 2.20E-17 | 7.71E-01 | 3.59E-18 | 4.94E-17 |
| ## | -22 | 22 | -61 | 1.5 | 0.13 | 0.93 | 1.33 | 2.85E-17 | 2.20E-17 | 7.71E-01 | 3.59E-18 | 4.94E-17 |
| ## | 0 | 22 | -61 | 1.5 | 0.19 | 0.76 | 1.05 | 3.88E-17 | 2.84E-17 | 7.31E-01 | 7.22E-18 | 5.21E-17 |
| ## | | | Average= | | 0.55 | 0.63 | 0.88 | | | | | |
| ## | | | | | | | | | | | | |
| ## | 0 | -22 | -81 | 1.5 | 1.03 | 0.55 | 0.79 | 3.27E-17 | 2.33E-17 | 7.11E-01 | 3.36E-17 | 2.69E-18 |
| ## | 22 | -22 | -81 | 1.5 | 1.17 | 0.61 | 0.89 | 2.92E-17 | 2.18E-17 | 7.44E-01 | 3.42E-17 | 1.53E-18 |
| ## | -22 | -22 | -81 | 1.5 | 1.17 | 0.61 | 0.89 | 2.92E-17 | 2.18E-17 | 7.44E-01 | 3.42E-17 | 1.53E-18 |
| ## | 33 | -5 | -81 | 1.5 | 1.21 | 0.67 | 0.94 | 1.60E-17 | 1.14E-17 | 7.13E-01 | 1.94E-17 | 1.89E-18 |
| ## | -33 | -5 | -81 | 1.5 | 1.21 | 0.67 | 0.94 | 1.60E-17 | 1.14E-17 | 7.13E-01 | 1.94E-17 | 1.89E-18 |
| ## | 33 | 0 | -81 | 1.5 | 0.28 | 0.28 | 0.28 | 1.40E-17 | 9.82E-18 | 7.03E-01 | 3.98E-18 | 3.81E-18 |
| ## | -33 | 0 | -81 | 1.5 | 0.28 | 0.28 | 0.28 | 1.40E-17 | 9.82E-18 | 7.03E-01 | 3.98E-18 | 3.81E-18 |
| ## | 33 | 5 | -81 | 1.5 | 0.22 | 0.93 | 1.29 | 1.29E-17 | 9.22E-18 | 7.17E-01 | 2.79E-18 | 2.11E-17 |
| ## | -33 | 5 | -81 | 1.5 | 0.22 | 0.93 | 1.29 | 1.29E-17 | 9.22E-18 | 7.17E-01 | 2.79E-18 | 2.11E-17 |
| ## | 22 | 22 | -81 | 1.5 | 0.13 | 1.26 | 1.82 | 1.57E-17 | 1.21E-17 | 7.66E-01 | 2.07E-18 | 3.74E-17 |
| ## | -22 | 22 | -81 | 1.5 | 0.13 | 1.26 | 1.82 | 1.57E-17 | 1.21E-17 | 7.66E-01 | 2.07E-18 | 3.74E-17 |
| ## | 0 | 22 | -81 | 1.5 | 0.19 | 0.99 | 1.39 | 1.95E-17 | 1.41E-17 | 7.25E-01 | 3.75E-18 | 3.47E-17 |
| | | | Average= | | 0.60 | 0.75 | 1.05 | | | | | |