EDE Data For Point Sources Near The Body Surface

George Xu
Associate Professor
Nuclear Engineering and Health Physics Programs
Rensselaer Polytechnic Institute
Troy, New York
*Phone: 518-276-4014
*E-mail: xug2@rpi.edu

Sponsored by EPRI

1

Purpose

To present additional test results for point sources near the body (<30cm) to support EPRI Two-Dosimeter algorithm for reporting personnel EDE

2

Background

- EPRI Two-Dosimeter Method provided technical grounds for measuring EDE using one dosimeter for routine jobs <u>or</u> two dosimeters for special jobs
- Current NRC exemption limited the use of the method to sources at least 12 inches (~30 cm) from the body based on earlier EDE data
- Limitation made the exemption impractical for many uses in power plants

3

Spatial Definition of the Phantom

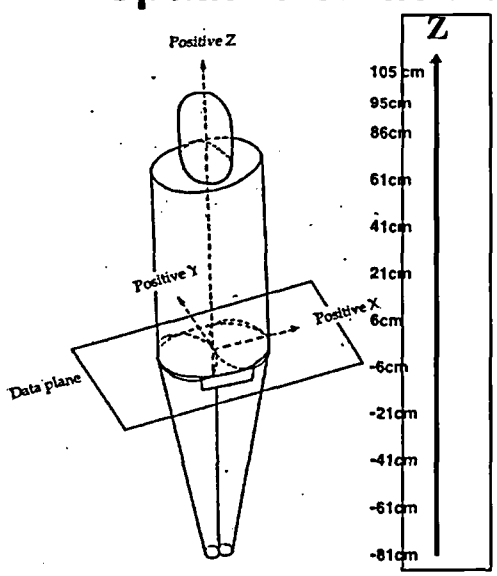

- **A data plane is a 2D cross section defined by the X-Y coordinate**
- **12 data planes are defined for various height, Z**
- **Z = 95 cm is the top of the head**
- **Z= 0 cm is the upper end of the legs**
- **Z= - 81 cm is the bottom of the feet**

4

Spatial Definition of the Data Pane

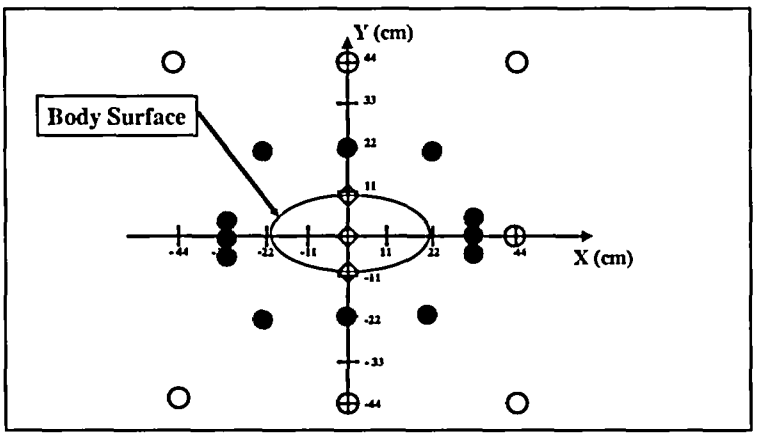

- The phantom faces the negative Y axis
- The empty circles are the locations studied before
- The solid circles are the new locations
- Diamonds are additional for Z=105 cm (overhead) only
- New locations are about 10-cm from the body surface
- Three locations in the side of the body are averaged

5

EPRI Two-dosimeter Algorithm To Be Tested

EPRI Algorithm #3

$$H'_E = [\mathrm{Max}(R_{front}, R_{back}) + \mathrm{Avg}(R_{front}, R_{back})]/2$$

$$Ratio = \frac{H'_E}{H_E}$$

Where H'_E is the estimated EDE;
H_E is the real EDE from Monte Carlo calculations
R is dosimeter reading

6

Monte Carlo Calculation to Determine the Real " EDE"

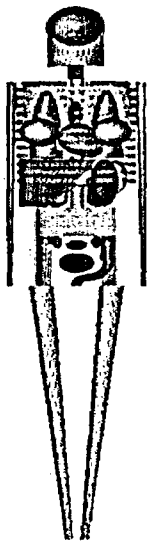

- MCNP Code (version 4C) originated from Los Alamos National Lab
- MIRD adult male and female phantoms originated from Oak Ridge National Lab for Society of Nuclear Medicine (1987)
  - 50 organs and tissues
  - Two dosimeters (front and back)

Photon energies:
- 0.3 MeV
- 1.0 MeV
- 1.5 MeV

7

ICRP Radiation Protection Dosimetry System

1. Effective Dose Equivalent (EDE) (ICRP-26 (1977) and 10CFR20 (1994))

$$EDE = \Sigma_T w_T H_T$$

2. Effective Dos (ED) (ICRP-60 (1991)

$$\text{Eff Dose} = \Sigma_T w_T H_T \quad \text{and} \quad \text{Eq dose, } H_T = \Sigma_R w_R D_{T,R}$$

Organ (T)	w_T(ICRP-26)	w_T(ICRP-60)	w_T (ICRP 2005)
Gonads	0.25	0.20	
Bone marrow (red)	0.12	0.12	
Colon	Not given	0.12	
Lung	0.12	0.12	
Stomach	Not given	0.12	Being Evaluated
Bladder	Not given	0.05	
Breast	0.15	0.05	
Liver	Not given	0.05	
Esophagus	Not given	0.05	
Thyroid	0.03	0.05	
Skin	Not given	0.01	
Bone surface	0.03	0.01	
Remainder*	0.30	0.05	

*Definition of the "remainder" follows the ICRP-26 and ICRP 60.

8

Findings of EPRI Method at <30 cm

- Photon point sources of 0.3, 1.0 and 1.5 MeV cover most possible exposures
- 10-cm from the body source is a reasonable "near-body" scenario in nuclear power plant environments
- For each Z, all data on each the whole data plane are averaged

(Please Reference data in the Excel table)

9

Test 1 is the single dosimeter algorithm

Test 2 = (front + back dosimeters)/(2*EDE)

Test 3 = [Higher of (front; back dosimeters) + Average of (front + back dosimeters)]/(2*EDE)

											MAX	0.96
											MIN	0.53
	X	Y	Z	Energy	Test 1	Test 2	Test 3	EDE	ED	ED/EDE	Dosimeter Front	Dosimeter Back
1												
2	0	0	105	0.3	0.02	0.02	0.02	2.50E-17	1.37E-17	5.49E-01	5.11E-19	4.16E-19
3	0	-10	105	0.3	1.03	0.53	0.78	2.58E-17	1.36E-17	5.28E-01	2.67E-17	5.36E-19
4	0	10	105	0.3	0.03	0.68	1.00	2.03E-17	1.15E-17	5.65E-01	5.98E-19	2.69E-17
5	0	-22	105	0.3	1.23	0.64	0.93	2.46E-17	1.48E-17	6.04E-01	3.01E-17	1.27E-18
6	22	-22	105	0.3	1.36	0.75	1.05	2.06E-17	1.32E-17	6.44E-01	2.79E-17	2.91E-18
7	-22	-22	105	0.3	1.36	0.75	1.05	2.06E-17	1.32E-17	6.44E-01	2.79E-17	2.91E-18
8	33	-5	105	0.3	0.91	0.52	0.72	1.60E-17	1.05E-17	6.58E-01	1.47E-17	2.17E-18
9	-33	-5	105	0.3	0.91	0.52	0.72	1.60E-17	1.05E-17	6.58E-01	1.47E-17	2.17E-18
10	33	0	105	0.3	0.16	0.15	0.16	1.57E-17	1.02E-17	6.53E-01	2.57E-18	2.05E-18
11	-33	0	105	0.3	0.16	0.15	0.16	1.57E-17	1.02E-17	6.53E-01	2.57E-18	2.05E-18
12	33	5	105	0.3	0.17	0.79	1.09	1.48E-17	9.84E-18	6.64E-01	2.52E-18	2.08E-17
13	-33	5	105	0.3	0.17	0.79	1.09	1.48E-17	9.84E-18	6.64E-01	2.52E-18	2.08E-17
14	22	22	105	0.3	0.22	1.08	1.50	1.44E-17	1.05E-17	7.27E-01	3.22E-18	2.78E-17
15	-22	22	105	0.3	0.22	1.08	1.50	1.44E-17	1.05E-17	7.27E-01	3.22E-18	2.78E-17
16	0	22	105	0.3	0.08	0.95	1.39	1.68E-17	1.15E-17	6.84E-01	1.40E-18	3.06E-17
17			Average=		0.54	0.63	0.88					
18												
19	0	-22	81	0.3	1.04	0.56	0.80	7.32E-17	4.76E-17	6.50E-01	7.62E-17	5.25E-18
20	22	-22	81	0.3	1.28	0.72	1.00	4.73E-17	3.08E-17	6.52E-01	6.05E-17	7.59E-18
21	-22	-22	81	0.3	1.28	0.72	1.00	4.73E-17	3.08E-17	6.52E-01	6.05E-17	7.59E-18
22	33	-5	81	0.3	0.62	0.38	0.50	3.07E-17	2.08E-17	6.77E-01	1.90E-17	4.68E-18
23	-33	-5	81	0.3	0.62	0.38	0.50	3.07E-17	2.08E-17	6.77E-01	1.90E-17	4.68E-18
24	33	0	81	0.3	0.26	0.23	0.25	2.95E-17	2.13E-17	7.23E-01	7.64E-18	6.07E-18
25	-33	0	81	0.3	0.26	0.23	0.25	2.95E-17	2.13E-17	7.23E-01	7.64E-18	6.07E-18
26	33	5	81	0.3	0.18	0.84	1.18	2.78E-17	2.05E-17	7.37E-01	5.02E-18	4.19E-17
27	-33	5	81	0.3	0.18	0.84	1.18	2.78E-17	2.05E-17	7.37E-01	5.02E-18	4.19E-17
28	22	22	81	0.3	0.20	1.03	1.44	3.17E-17	2.55E-17	8.04E-01	6.38E-18	5.88E-17
29	-22	22	81	0.3	0.20	1.03	1.44	3.17E-17	2.55E-17	8.04E-01	6.38E-18	5.88E-17
30	0	22	81	0.3	0.11	0.87	1.25	4.75E-17	3.68E-17	7.76E-01	5.34E-18	7.72E-17
31			Average=		0.52	0.65	0.90					
32												
33	0	-22	61	0.3	1.49	0.80	1.14	1.68E-16	1.05E-16	6.27E-01	2.49E-16	1.75E-17
34	22	-22	61	0.3	1.46	0.82	1.14	8.94E-17	5.89E-17	6.59E-01	1.31E-16	1.66E-17
35	-22	-22	61	0.3	1.46	0.82	1.14	8.94E-17	5.89E-17	6.59E-01	1.31E-16	1.66E-17
36	33	-5	61	0.3	1.36	0.83	1.09	4.89E-17	3.39E-17	6.92E-01	6.65E-17	1.49E-17
37	-33	-5	61	0.3	1.36	0.83	1.09	4.89E-17	3.39E-17	6.92E-01	6.65E-17	1.49E-17
38	33	0	61	0.3	0.46	0.46	0.46	4.58E-17	3.14E-17	6.86E-01	2.12E-17	2.07E-17
39	-33	0	61	0.3	0.46	0.46	0.46	4.58E-17	3.14E-17	6.86E-01	2.12E-17	2.07E-17
40	33	5	61	0.3	0.35	1.10	1.48	4.32E-17	3.13E-17	7.24E-01	1.50E-17	8.04E-17
41	-33	5	61	0.3	0.35	1.10	1.48	4.32E-17	3.13E-17	7.24E-01	1.50E-17	8.04E-17
42	22	22	61	0.3	0.33	1.36	1.88	5.43E-17	4.38E-17	8.06E-01	1.80E-17	1.30E-16
43	-22	22	61	0.3	0.33	1.36	1.88	5.43E-17	4.38E-17	8.06E-01	1.80E-17	1.30E-16
44	0	22	61	0.3	0.20	1.49	2.13	8.96E-17	7.14E-17	7.97E-01	1.78E-17	2.49E-16
45			Average=		0.80	0.95	1.28					
46												
47	0	-22	41	0.3	6.04	3.11	4.58	1.73E-16	1.25E-16	7.25E-01	1.05E-15	3.05E-17
48	22	-22	41	0.3	2.11	1.15	1.63	1.02E-16	8.05E-17	7.93E-01	2.14E-16	2.00E-17
49	-22	-22	41	0.3	2.11	1.15	1.63	1.02E-16	8.05E-17	7.93E-01	2.14E-16	2.00E-17
50	33	-5	41	0.3	1.83	1.08	1.46	6.11E-17	4.90E-17	8.02E-01	1.12E-16	1.95E-17
51	-33	-5	41	0.3	1.83	1.08	1.46	6.11E-17	4.90E-17	8.02E-01	1.12E-16	1.95E-17
52	33	0	41	0.3	0.54	0.55	0.55	5.89E-17	4.57E-17	7.76E-01	3.21E-17	3.24E-17
53	-33	0	41	0.3	0.54	0.55	0.55	5.89E-17	4.57E-17	7.76E-01	3.21E-17	3.24E-17
54	33	5	41	0.3	0.34	1.13	1.53	5.69E-17	4.39E-17	7.71E-01	1.96E-17	1.10E-16
55	-33	5	41	0.3	0.34	1.13	1.53	5.69E-17	4.39E-17	7.71E-01	1.96E-17	1.10E-16
56	22	22	41	0.3	0.26	1.50	2.13	7.71E-17	5.81E-17	7.54E-01	2.00E-17	2.12E-16
57	-22	22	41	0.3	0.26	1.50	2.13	7.71E-17	5.81E-17	7.54E-01	2.00E-17	2.12E-16
58	0	22	41	0.3	0.23	4.06	5.98	1.33E-16	9.54E-17	7.19E-01	3.07E-17	1.05E-15
59			Average=		1.37	1.50	2.09					

	X	Y	Z	Energy	Test 1	Test 2	Test 3	EDE	ED	ED/EDE	Dosimeter Front	Dosimeter Back
60												
61	0	-22	21	0.3	1.77	0.95	1.36	1.40E-16	1.25E-16	8.91E-01	2.49E-16	1.67E-17
62	22	-22	21	0.3	1.63	0.89	1.26	8.08E-17	7.65E-17	9.47E-01	1.32E-16	1.24E-17
63	-22	-22	21	0.3	1.63	0.89	1.26	8.08E-17	7.65E-17	9.47E-01	1.32E-16	1.24E-17
64	33	-5	21	0.3	1.74	1.00	1.37	4.58E-17	4.17E-17	9.10E-01	7.97E-17	1.14E-17
65	-33	-5	21	0.3	1.74	1.00	1.37	4.58E-17	4.17E-17	9.10E-01	7.97E-17	1.14E-17
66	33	0	21	0.3	0.45	0.45	0.45	4.34E-17	3.94E-17	9.09E-01	1.96E-17	1.94E-17
67	-33	0	21	0.3	0.45	0.45	0.45	4.34E-17	3.94E-17	9.09E-01	1.96E-17	1.94E-17
68	33	5	21	0.3	0.28	1.08	1.48	4.24E-17	3.80E-17	8.95E-01	1.17E-17	7.96E-17
69	-33	5	21	0.3	0.28	1.08	1.48	4.24E-17	3.80E-17	8.95E-01	1.17E-17	7.96E-17
70	22	22	21	0.3	0.20	1.18	1.67	6.13E-17	5.30E-17	8.63E-01	1.23E-17	1.33E-16
71	-22	22	21	0.3	0.20	1.18	1.67	6.13E-17	5.30E-17	8.63E-01	1.23E-17	1.33E-16
72	0	22	21	0.3	0.17	1.27	1.83	1.04E-16	8.62E-17	8.26E-01	1.78E-17	2.48E-16
73			Average=		0.88	0.95	1.30					
74												
75	0	-22	6	0.3	0.62	0.33	0.48	1.58E-16	1.29E-16	8.17E-01	9.84E-17	6.68E-18
76	22	-22	6	0.3	0.99	0.53	0.76	7.35E-17	6.42E-17	8.73E-01	7.26E-17	5.74E-18
77	-22	-22	6	0.3	0.99	0.53	0.76	7.35E-17	6.42E-17	8.73E-01	7.26E-17	5.74E-18
78	33	-5	6	0.3	1.43	0.78	1.11	3.39E-17	3.09E-17	9.11E-01	4.85E-17	4.77E-18
79	-33	-5	6	0.3	1.43	0.78	1.11	3.39E-17	3.09E-17	9.11E-01	4.85E-17	4.77E-18
80	33	0	6	0.3	0.28	0.29	0.29	3.06E-17	2.75E-17	8.99E-01	8.60E-18	8.85E-18
81	-33	0	6	0.3	0.28	0.29	0.29	3.06E-17	2.75E-17	8.99E-01	8.60E-18	8.85E-18
82	33	5	6	0.3	0.17	0.91	1.27	2.97E-17	2.66E-17	8.95E-01	5.15E-18	4.87E-17
83	-33	5	6	0.3	0.17	0.91	1.27	2.97E-17	2.66E-17	8.95E-01	5.15E-18	4.87E-17
84	22	22	6	0.3	0.14	0.89	1.27	4.42E-17	3.97E-17	8.99E-01	6.04E-18	7.27E-17
85	-22	22	6	0.3	0.14	0.89	1.27	4.42E-17	3.97E-17	8.99E-01	6.04E-18	7.27E-17
86	0	22	6	0.3	0.09	0.69	0.99	7.55E-17	6.39E-17	8.47E-01	6.81E-18	9.78E-17
87			Average=		0.56	0.65	0.91					
88												
89	0	-22	-21	0.3	0.58	0.30	0.44	5.74E-17	4.45E-17	7.75E-01	3.30E-17	9.94E-19
90	22	-22	-21	0.3	0.86	0.45	0.65	3.49E-17	2.78E-17	7.96E-01	3.00E-17	1.23E-18
91	-22	-22	-21	0.3	0.86	0.45	0.65	3.49E-17	2.78E-17	7.96E-01	3.00E-17	1.23E-18
92	33	-5	-21	0.3	1.62	0.84	1.23	1.37E-17	1.05E-17	7.66E-01	2.23E-17	9.13E-19
93	-33	-5	-21	0.3	1.62	0.84	1.23	1.37E-17	1.05E-17	7.66E-01	2.23E-17	9.13E-19
94	33	0	-21	0.3	0.14	0.13	0.14	1.27E-17	9.51E-18	7.51E-01	1.79E-18	1.53E-18
95	-33	0	-21	0.3	0.14	0.13	0.14	1.27E-17	9.51E-18	7.51E-01	1.79E-18	1.53E-18
96	33	5	-21	0.3	0.08	0.96	1.40	1.19E-17	8.99E-18	7.59E-01	8.93E-19	2.18E-17
97	-33	5	-21	0.3	0.08	0.96	1.40	1.19E-17	8.99E-18	7.59E-01	8.93E-19	2.18E-17
98	22	22	-21	0.3	0.08	0.91	1.32	1.67E-17	1.34E-17	8.04E-01	1.37E-18	2.89E-17
99	-22	22	-21	0.3	0.08	0.91	1.32	1.67E-17	1.34E-17	8.04E-01	1.37E-18	2.89E-17
##	0	22	-21	0.3	0.05	0.59	0.86	2.86E-17	2.22E-17	7.74E-01	1.31E-18	3.25E-17
##			Average=		0.52	0.62	0.90					
##												
##	0	-22	-41	0.3	0.84	0.43	0.63	2.29E-17	1.66E-17	7.25E-01	1.92E-17	3.39E-19
##	22	-22	-41	0.3	1.01	0.52	0.76	1.72E-17	1.28E-17	7.47E-01	1.73E-17	4.10E-19
##	-22	-22	-41	0.3	1.01	0.52	0.76	1.72E-17	1.28E-17	7.47E-01	1.73E-17	4.10E-19
##	33	-5	-41	0.3	2.01	1.02	1.52	6.71E-18	4.60E-18	6.86E-01	1.35E-17	2.83E-19
##	-33	-5	-41	0.3	2.01	1.02	1.52	6.71E-18	4.60E-18	6.86E-01	1.35E-17	2.83E-19
##	33	0	-41	0.3	0.07	0.07	0.08	6.05E-18	4.05E-18	6.70E-01	4.09E-19	4.98E-19
##	-33	0	-41	0.3	0.07	0.07	0.08	6.05E-18	4.05E-18	6.70E-01	4.09E-19	4.98E-19
##	33	5	-41	0.3	0.06	1.25	1.84	5.71E-18	3.88E-18	6.79E-01	3.33E-19	1.39E-17
##	-33	5	-41	0.3	0.06	1.25	1.84	5.71E-18	3.88E-18	6.79E-01	3.33E-19	1.39E-17
##	22	22	-41	0.3	0.06	1.09	1.61	8.00E-18	5.86E-18	7.32E-01	4.55E-19	1.70E-17
##	-22	22	-41	0.3	0.06	1.09	1.61	8.00E-18	5.86E-18	7.32E-01	4.55E-19	1.70E-17
##	0	22	-41	0.3	0.04	0.75	1.11	1.25E-17	8.82E-18	7.03E-01	4.97E-19	1.83E-17
##			Average=		0.61	0.76	1.11					
##												
##	0	-22	-61	0.3	1.08	0.55	0.81	1.15E-17	7.94E-18	6.88E-01	1.24E-17	2.27E-19
##	22	-22	-61	0.3	1.15	0.58	0.87	9.47E-18	6.75E-18	7.13E-01	1.09E-17	1.24E-19
##	-22	-22	-61	0.3	1.15	0.58	0.87	9.47E-18	6.75E-18	7.13E-01	1.09E-17	1.24E-19
##	33	-5	-61	0.3	1.46	0.75	1.10	3.68E-18	2.34E-18	6.36E-01	5.37E-18	1.28E-19
##	-33	-5	-61	0.3	1.46	0.75	1.10	3.68E-18	2.34E-18	6.36E-01	5.37E-18	1.28E-19

	X	Y	Z	Energy	Test 1	Test 2	Test 3	EDE	ED	ED/EDE	Dosimeter Front	Dosimeter Back
##	33	0	-61	0.3	0.06	0.07	0.07	3.21E-18	1.98E-18	6.18E-01	2.05E-19	2.21E-19
##	-33	0	-61	0.3	0.06	0.07	0.07	3.21E-18	1.98E-18	6.18E-01	2.05E-19	2.21E-19
##	33	5	-61	0.3	0.06	0.91	1.34	2.97E-18	1.86E-18	6.29E-01	1.79E-19	5.24E-18
##	-33	5	-61	0.3	0.06	0.91	1.34	2.97E-18	1.86E-18	6.29E-01	1.79E-19	5.24E-18
##	22	22	-61	0.3	0.05	1.37	2.04	4.19E-18	2.92E-18	6.96E-01	2.09E-19	1.13E-17
##	-22	22	-61	0.3	0.05	1.37	2.04	4.19E-18	2.92E-18	6.96E-01	2.09E-19	1.13E-17
##	0	22	-61	0.3	0.04	1.05	1.55	5.83E-18	3.86E-18	6.62E-01	2.44E-19	1.20E-17
##			Average=		0.56	0.75	1.10					
##												
##	0	-22	-81	0.3	1.24	0.63	0.93	6.27E-18	4.24E-18	6.75E-01	7.75E-18	1.33E-19
##	22	-22	-81	0.3	1.44	0.73	1.09	5.52E-18	3.83E-18	6.94E-01	7.96E-18	9.83E-20
##	-22	-22	-81	0.3	1.44	0.73	1.09	5.52E-18	3.83E-18	6.94E-01	7.96E-18	9.83E-20
##	33	-5	-81	0.3	1.21	0.62	0.91	2.21E-18	1.37E-18	6.21E-01	2.67E-18	6.71E-20
##	-33	-5	-81	0.3	1.21	0.62	0.91	2.21E-18	1.37E-18	6.21E-01	2.67E-18	6.71E-20
##	33	0	-81	0.3	0.10	0.08	0.09	1.78E-18	1.04E-18	5.88E-01	1.74E-19	1.21E-19
##	-33	0	-81	0.3	0.10	0.08	0.09	1.78E-18	1.04E-18	5.88E-01	1.74E-19	1.21E-19
##	33	5	-81	0.3	0.05	0.97	1.42	1.60E-18	9.70E-19	6.06E-01	8.39E-20	3.01E-18
##	-33	5	-81	0.3	0.05	0.97	1.42	1.60E-18	9.70E-19	6.06E-01	8.39E-20	3.01E-18
##	22	22	-81	0.3	0.05	1.94	2.88	2.17E-18	1.49E-18	6.88E-01	1.15E-19	8.29E-18
##	-22	22	-81	0.3	0.05	1.94	2.88	2.17E-18	1.49E-18	6.88E-01	1.15E-19	8.29E-18
##	0	22	-81	0.3	0.05	1.51	2.24	2.65E-18	1.73E-18	6.53E-01	1.28E-19	7.87E-18
##			Average=		0.58	0.90	1.33					
##												
##												
##	0	0	105	1	0.07	0.06	0.07	9.32E-17	5.45E-17	5.85E-01	6.29E-18	5.70E-18
##	0	-10	105	1	0.95	0.50	0.72	9.45E-17	5.33E-17	5.64E-01	8.94E-17	5.53E-18
##	0	10	105	1	0.08	0.63	0.90	7.63E-17	4.59E-17	6.02E-01	5.99E-18	9.01E-17
##	0	-22	105	1	1.06	0.58	0.82	8.73E-17	5.67E-17	6.49E-01	9.25E-17	8.30E-18
##	22	-22	105	1	1.19	0.74	0.96	7.18E-17	4.90E-17	6.83E-01	8.52E-17	2.07E-17
##	-22	-22	105	1	1.19	0.74	0.96	7.18E-17	4.90E-17	6.83E-01	8.52E-17	2.07E-17
##	33	-5	105	1	1.00	0.64	0.82	5.83E-17	4.00E-17	6.85E-01	5.82E-17	1.62E-17
##	-33	-5	105	1	1.00	0.64	0.82	5.83E-17	4.00E-17	6.85E-01	5.82E-17	1.62E-17
##	33	0	105	1	0.29	0.30	0.30	5.76E-17	3.90E-17	6.78E-01	1.69E-17	1.72E-17
##	-33	0	105	1	0.29	0.30	0.30	5.76E-17	3.90E-17	6.78E-01	1.69E-17	1.72E-17
##	33	5	105	1	0.31	0.79	1.04	5.51E-17	3.77E-17	6.84E-01	1.70E-17	7.04E-17
##	-33	5	105	1	0.31	0.79	1.04	5.51E-17	3.77E-17	6.84E-01	1.70E-17	7.04E-17
##	22	22	105	1	0.36	0.96	1.27	5.46E-17	4.07E-17	7.46E-01	1.96E-17	8.57E-17
##	-22	22	105	1	0.36	0.96	1.27	5.46E-17	4.07E-17	7.46E-01	1.96E-17	8.57E-17
##	0	22	105	1	0.14	0.81	1.14	6.40E-17	4.57E-17	7.15E-01	9.15E-18	9.46E-17
##			Average=		0.57	0.63	0.83					
##												
##	0	-22	81	1	0.94	0.53	0.73	2.41E-16	1.62E-16	6.74E-01	2.25E-16	3.15E-17
##	22	-22	81	1	1.15	0.72	0.93	1.57E-16	1.06E-16	6.79E-01	1.80E-16	4.51E-17
##	-22	-22	81	1	1.15	0.72	0.93	1.57E-16	1.06E-16	6.79E-01	1.80E-16	4.51E-17
##	33	-5	81	1	0.79	0.53	0.66	1.09E-16	7.73E-17	7.07E-01	8.66E-17	3.03E-17
##	-33	-5	81	1	0.79	0.53	0.66	1.09E-16	7.73E-17	7.07E-01	8.66E-17	3.03E-17
##	33	0	81	1	0.44	0.41	0.42	1.06E-16	7.88E-17	7.43E-01	4.64E-17	3.98E-17
##	-33	0	81	1	0.44	0.41	0.42	1.06E-16	7.88E-17	7.43E-01	4.64E-17	3.98E-17
##	33	5	81	1	0.30	0.83	1.10	1.02E-16	7.61E-17	7.48E-01	3.04E-17	1.39E-16
##	-33	5	81	1	0.30	0.83	1.10	1.02E-16	7.61E-17	7.48E-01	3.04E-17	1.39E-16
##	22	22	81	1	0.34	0.95	1.25	1.12E-16	9.10E-17	8.14E-01	3.75E-17	1.75E-16
##	-22	22	81	1	0.34	0.95	1.25	1.12E-16	9.10E-17	8.14E-01	3.75E-17	1.75E-16
##	0	22	81	1	0.19	0.78	1.07	1.69E-16	1.32E-16	7.80E-01	3.25E-17	2.30E-16
##			Average=		0.60	0.68	0.88					
##												
##	0	-22	61	1	1.40	0.79	1.10	5.22E-16	3.38E-16	6.47E-01	7.32E-16	8.96E-17
##	22	-22	61	1	1.33	0.81	1.07	2.87E-16	1.96E-16	6.82E-01	3.83E-16	8.45E-17
##	-22	-22	61	1	1.33	0.81	1.07	2.87E-16	1.96E-16	6.82E-01	3.83E-16	8.45E-17
##	33	-5	61	1	1.28	0.87	1.08	1.77E-16	1.29E-16	7.26E-01	2.28E-16	8.11E-17
##	-33	-5	61	1	1.28	0.87	1.08	1.77E-16	1.29E-16	7.26E-01	2.28E-16	8.11E-17
##	33	0	61	1	0.63	0.61	0.62	1.68E-16	1.22E-16	7.25E-01	1.05E-16	9.96E-17
##	-33	0	61	1	0.63	0.61	0.62	1.68E-16	1.22E-16	7.25E-01	1.05E-16	9.96E-17

	X	Y	Z	Energy	Test 1	Test 2	Test 3	EDE	ED	ED/EDE	Dosimeter Front	Dosimeter Back
##	33	5	61	1	0.52	1.07	1.34	1.59E-16	1.21E-16	7.57E-01	8.22E-17	2.58E-16
##	-33	5	61	1	0.52	1.07	1.34	1.59E-16	1.21E-16	7.57E-01	8.22E-17	2.58E-16
##	22	22	61	1	0.46	1.28	1.69	1.82E-16	1.47E-16	8.06E-01	8.43E-17	3.83E-16
##	-22	22	61	1	0.46	1.28	1.69	1.82E-16	1.47E-16	8.06E-01	8.43E-17	3.83E-16
##	0	22	61	1	0.28	1.40	1.95	2.93E-16	2.37E-16	8.07E-01	8.33E-17	7.36E-16
##			Average=		0.84	0.96	1.22					
##												
##	0	-22	41	1	6.00	3.13	4.56	5.36E-16	3.99E-16	7.44E-01	3.22E-15	1.40E-16
##	22	-22	41	1	1.95	1.12	1.53	3.23E-16	2.60E-16	8.04E-01	6.29E-16	9.43E-17
##	-22	-22	41	1	1.95	1.12	1.53	3.23E-16	2.60E-16	8.04E-01	6.29E-16	9.43E-17
##	33	-5	41	1	1.62	1.06	1.34	2.18E-16	1.81E-16	8.29E-01	3.54E-16	1.06E-16
##	-33	-5	41	1	1.62	1.06	1.34	2.18E-16	1.81E-16	8.29E-01	3.54E-16	1.06E-16
##	33	0	41	1	0.71	0.71	0.72	2.13E-16	1.72E-16	8.10E-01	1.50E-16	1.53E-16
##	-33	0	41	1	0.71	0.71	0.72	2.13E-16	1.72E-16	8.10E-01	1.50E-16	1.53E-16
##	33	5	41	1	0.51	1.10	1.40	2.06E-16	1.65E-16	8.04E-01	1.05E-16	3.49E-16
##	-33	5	41	1	0.51	1.10	1.40	2.06E-16	1.65E-16	8.04E-01	1.05E-16	3.49E-16
##	22	22	41	1	0.39	1.45	1.99	2.49E-16	1.96E-16	7.84E-01	9.67E-17	6.28E-16
##	-22	22	41	1	0.39	1.45	1.99	2.49E-16	1.96E-16	7.84E-01	9.67E-17	6.28E-16
##	0	22	41	1	0.33	4.03	5.88	4.17E-16	3.11E-16	7.45E-01	1.37E-16	3.23E-15
##			Average=		1.39	1.50	2.03					
##												
##	0	-22	21	1	1.69	0.94	1.31	4.34E-16	3.92E-16	9.04E-01	7.31E-16	8.72E-17
##	22	-22	21	1	1.50	0.88	1.19	2.57E-16	2.46E-16	9.55E-01	3.86E-16	6.65E-17
##	-22	-22	21	1	1.50	0.88	1.19	2.57E-16	2.46E-16	9.55E-01	3.86E-16	6.65E-17
##	33	-5	21	1	1.49	0.95	1.22	1.72E-16	1.59E-16	9.28E-01	2.56E-16	6.98E-17
##	-33	-5	21	1	1.49	0.95	1.22	1.72E-16	1.59E-16	9.28E-01	2.56E-16	6.98E-17
##	33	0	21	1	0.62	0.63	0.63	1.65E-16	1.54E-16	9.34E-01	1.03E-16	1.04E-16
##	-33	0	21	1	0.62	0.63	0.63	1.65E-16	1.54E-16	9.34E-01	1.03E-16	1.04E-16
##	33	5	21	1	0.43	1.02	1.31	1.61E-16	1.48E-16	9.22E-01	6.92E-17	2.59E-16
##	-33	5	21	1	0.43	1.02	1.31	1.61E-16	1.48E-16	9.22E-01	6.92E-17	2.59E-16
##	22	22	21	1	0.32	1.12	1.51	2.04E-16	1.82E-16	8.94E-01	6.59E-17	3.88E-16
##	-22	22	21	1	0.32	1.12	1.51	2.04E-16	1.82E-16	8.94E-01	6.59E-17	3.88E-16
##	0	22	21	1	0.26	1.23	1.71	3.35E-16	2.85E-16	8.51E-01	8.68E-17	7.34E-16
##			Average=		0.89	0.95	1.23					
##												
##	0	-22	6	1	0.60	0.34	0.47	4.82E-16	4.01E-16	8.31E-01	2.89E-16	4.11E-17
##	22	-22	6	1	0.91	0.53	0.72	2.35E-16	2.09E-16	8.88E-01	2.13E-16	3.67E-17
##	-22	-22	6	1	0.91	0.53	0.72	2.35E-16	2.09E-16	8.88E-01	2.13E-16	3.67E-17
##	33	-5	6	1	1.18	0.72	0.95	1.35E-16	1.24E-16	9.23E-01	1.59E-16	3.56E-17
##	-33	-5	6	1	1.18	0.72	0.95	1.35E-16	1.24E-16	9.23E-01	1.59E-16	3.56E-17
##	33	0	6	1	0.44	0.44	0.44	1.24E-16	1.14E-16	9.18E-01	5.48E-17	5.52E-17
##	-33	0	6	1	0.44	0.44	0.44	1.24E-16	1.14E-16	9.18E-01	5.48E-17	5.52E-17
##	33	5	6	1	0.30	0.83	1.09	1.20E-16	1.10E-16	9.16E-01	3.62E-17	1.62E-16
##	-33	5	6	1	0.30	0.83	1.09	1.20E-16	1.10E-16	9.16E-01	3.62E-17	1.62E-16
##	22	22	6	1	0.25	0.83	1.12	1.54E-16	1.42E-16	9.23E-01	3.89E-17	2.17E-16
##	-22	22	6	1	0.25	0.83	1.12	1.54E-16	1.42E-16	9.23E-01	3.89E-17	2.17E-16
##	0	22	6	1	0.16	0.66	0.90	2.51E-16	2.17E-16	8.66E-01	4.11E-17	2.87E-16
##			Average=		0.58	0.64	0.84					
##												
##	0	-22	-21	1	0.56	0.31	0.43	1.82E-16	1.44E-16	7.93E-01	1.02E-16	9.20E-18
##	22	-22	-21	1	0.79	0.44	0.61	1.17E-16	9.58E-17	8.20E-01	9.22E-17	1.02E-17
##	-22	-22	-21	1	0.79	0.44	0.61	1.17E-16	9.58E-17	8.20E-01	9.22E-17	1.02E-17
##	33	-5	-21	1	1.25	0.69	0.97	6.04E-17	4.87E-17	8.07E-01	7.52E-17	8.27E-18
##	-33	-5	-21	1	1.25	0.69	0.97	6.04E-17	4.87E-17	8.07E-01	7.52E-17	8.27E-18
##	33	0	-21	1	0.26	0.26	0.26	5.68E-17	4.52E-17	7.96E-01	1.48E-17	1.46E-17
##	-33	0	-21	1	0.26	0.26	0.26	5.68E-17	4.52E-17	7.96E-01	1.48E-17	1.46E-17
##	33	5	-21	1	0.15	0.77	1.08	5.38E-17	4.32E-17	8.03E-01	8.01E-18	7.48E-17
##	-33	5	-21	1	0.15	0.77	1.08	5.38E-17	4.32E-17	8.03E-01	8.01E-18	7.48E-17
##	22	22	-21	1	0.16	0.75	1.05	6.59E-17	5.53E-17	8.39E-01	1.03E-17	8.85E-17
##	-22	22	-21	1	0.16	0.75	1.05	6.59E-17	5.53E-17	8.39E-01	1.03E-17	8.85E-17
##	0	22	-21	1	0.09	0.53	0.75	1.05E-16	8.34E-17	7.97E-01	9.87E-18	1.01E-16
##			Average=		0.49	0.55	0.76					

	X	Y	Z	Energy	Test 1	Test 2	Test 3	EDE	ED	ED/EDE	Dosimeter Front	Dosimeter Back
##												
##	0	-22	-41	1	0.79	0.42	0.61	7.66E-17	5.73E-17	7.48E-01	6.06E-17	4.10E-18
##	22	-22	-41	1	0.93	0.50	0.71	5.92E-17	4.61E-17	7.77E-01	5.52E-17	3.67E-18
##	-22	-22	-41	1	0.93	0.50	0.71	5.92E-17	4.61E-17	7.77E-01	5.52E-17	3.67E-18
##	33	-5	-41	1	1.48	0.80	1.14	3.07E-17	2.29E-17	7.44E-01	4.54E-17	3.50E-18
##	-33	-5	-41	1	1.48	0.80	1.14	3.07E-17	2.29E-17	7.44E-01	4.54E-17	3.50E-18
##	33	0	-41	1	0.21	0.20	0.21	2.82E-17	2.07E-17	7.34E-01	5.98E-18	5.36E-18
##	-33	0	-41	1	0.21	0.20	0.21	2.82E-17	2.07E-17	7.34E-01	5.98E-18	5.36E-18
##	33	5	-41	1	0.14	0.96	1.37	2.66E-17	1.97E-17	7.39E-01	3.66E-18	4.75E-17
##	-33	5	-41	1	0.14	0.96	1.37	2.66E-17	1.97E-17	7.39E-01	3.66E-18	4.75E-17
##	22	22	-41	1	0.11	0.86	1.23	3.35E-17	2.61E-17	7.78E-01	3.76E-18	5.36E-17
##	-22	22	-41	1	0.11	0.86	1.23	3.35E-17	2.61E-17	7.78E-01	3.76E-18	5.36E-17
##	0	22	-41	1	0.12	0.63	0.89	5.06E-17	3.76E-17	7.42E-01	5.93E-18	5.84E-17
##			Average=		0.55	0.64	0.90					
##												
##	0	-22	-61	1	0.98	0.52	0.75	3.99E-17	2.84E-17	7.11E-01	3.91E-17	2.04E-18
##	22	-22	-61	1	1.03	0.54	0.79	3.33E-17	2.49E-17	7.45E-01	3.45E-17	1.41E-18
##	-22	-22	-61	1	1.03	0.54	0.79	3.33E-17	2.49E-17	7.45E-01	3.45E-17	1.41E-18
##	33	-5	-61	1	1.34	0.72	1.03	1.68E-17	1.18E-17	7.02E-01	2.25E-17	1.69E-18
##	-33	-5	-61	1	1.34	0.72	1.03	1.68E-17	1.18E-17	7.02E-01	2.25E-17	1.69E-18
##	33	0	-61	1	0.16	0.17	0.18	1.50E-17	1.03E-17	6.90E-01	2.37E-18	2.80E-18
##	-33	0	-61	1	0.16	0.17	0.18	1.50E-17	1.03E-17	6.90E-01	2.37E-18	2.80E-18
##	33	5	-61	1	0.12	0.84	1.20	1.41E-17	9.90E-18	7.01E-01	1.75E-18	2.20E-17
##	-33	5	-61	1	0.12	0.84	1.20	1.41E-17	9.90E-18	7.01E-01	1.75E-18	2.20E-17
##	22	22	-61	1	0.08	1.04	1.51	1.81E-17	1.35E-17	7.50E-01	1.49E-18	3.59E-17
##	-22	22	-61	1	0.08	1.04	1.51	1.81E-17	1.35E-17	7.50E-01	1.49E-18	3.59E-17
##	0	22	-61	1	0.14	0.84	1.19	2.49E-17	1.77E-17	7.09E-01	3.57E-18	3.83E-17
##			Average=		0.55	0.66	0.95					
##												
##	0	-22	-81	1	1.10	0.57	0.84	2.24E-17	1.56E-17	6.95E-01	2.46E-17	1.08E-18
##	22	-22	-81	1	1.27	0.65	0.96	2.00E-17	1.45E-17	7.27E-01	2.53E-17	6.68E-19
##	-22	-22	-81	1	1.27	0.65	0.96	2.00E-17	1.45E-17	7.27E-01	2.53E-17	6.68E-19
##	33	-5	-81	1	1.28	0.68	0.98	9.97E-18	6.82E-18	6.84E-01	1.28E-17	7.77E-19
##	-33	-5	-81	1	1.28	0.68	0.98	9.97E-18	6.82E-18	6.84E-01	1.28E-17	7.77E-19
##	33	0	-81	1	0.21	0.21	0.22	8.47E-18	5.67E-18	6.69E-01	1.75E-18	1.86E-18
##	-33	0	-81	1	0.21	0.21	0.22	8.47E-18	5.67E-18	6.69E-01	1.75E-18	1.86E-18
##	33	5	-81	1	0.18	0.97	1.36	7.72E-18	5.28E-18	6.83E-01	1.39E-18	1.36E-17
##	-33	5	-81	1	0.18	0.97	1.36	7.72E-18	5.28E-18	6.83E-01	1.39E-18	1.36E-17
##	22	22	-81	1	0.08	1.42	2.09	9.77E-18	7.22E-18	7.39E-01	7.98E-19	2.69E-17
##	-22	22	-81	1	0.08	1.42	2.09	9.77E-18	7.22E-18	7.39E-01	7.98E-19	2.69E-17
##	0	22	-81	1	0.14	1.11	1.60	1.21E-17	8.50E-18	7.01E-01	1.73E-18	2.52E-17
##			Average=		0.61	0.80	1.14					
##												
##												
##	0	0	105	1.5	0.10	0.09	0.10	1.38E-16	8.29E-17	5.99E-01	1.42E-17	1.15E-17
##	0	-10	105	1.5	0.90	0.49	0.69	1.38E-16	8.03E-17	5.81E-01	1.24E-16	1.14E-17
##	0	10	105	1.5	0.11	0.60	0.85	1.14E-16	7.02E-17	6.17E-01	1.25E-17	1.25E-16
##	0	-22	105	1.5	1.00	0.56	0.78	1.26E-16	8.40E-17	6.68E-01	1.25E-16	1.52E-17
##	22	-22	105	1.5	1.12	0.73	0.93	1.03E-16	7.21E-17	7.00E-01	1.15E-16	3.54E-17
##	-22	-22	105	1.5	1.12	0.73	0.93	1.03E-16	7.21E-17	7.00E-01	1.15E-16	3.54E-17
##	33	-5	105	1.5	0.98	0.66	0.82	8.52E-17	5.97E-17	7.01E-01	8.37E-17	2.87E-17
##	-33	-5	105	1.5	0.98	0.66	0.82	8.52E-17	5.97E-17	7.01E-01	8.37E-17	2.87E-17
##	33	0	105	1.5	0.34	0.35	0.35	8.40E-17	5.82E-17	6.93E-01	2.87E-17	2.96E-17
##	-33	0	105	1.5	0.34	0.35	0.35	8.40E-17	5.82E-17	6.93E-01	2.87E-17	2.96E-17
##	33	5	105	1.5	0.36	0.78	0.99	8.06E-17	5.64E-17	6.99E-01	2.90E-17	9.70E-17
##	-33	5	105	1.5	0.36	0.78	0.99	8.06E-17	5.64E-17	6.99E-01	2.90E-17	9.70E-17
##	22	22	105	1.5	0.43	0.93	1.18	8.11E-17	6.13E-17	7.56E-01	3.45E-17	1.16E-16
##	-22	22	105	1.5	0.43	0.93	1.18	8.11E-17	6.13E-17	7.56E-01	3.45E-17	1.16E-16
##	0	22	105	1.5	0.17	0.76	1.05	9.50E-17	6.92E-17	7.28E-01	1.66E-17	1.27E-16
##			Average=		0.58	0.63	0.80					
##												
##	0	-22	81	1.5	0.89	0.53	0.71	3.39E-16	2.32E-16	6.84E-01	3.03E-16	5.55E-17

	X	Y	Z	Energy	Test 1	Test 2	Test 3	EDE	ED	ED/EDE	Dosimeter Front	Dosimeter Back
##	22	-22	81	1.5	1.09	0.71	0.90	2.21E-16	1.53E-16	6.92E-01	2.42E-16	7.36E-17
##	-22	-22	81	1.5	1.09	0.71	0.90	2.21E-16	1.53E-16	6.92E-01	2.42E-16	7.36E-17
##	33	-5	81	1.5	0.83	0.59	0.71	1.59E-16	1.14E-16	7.19E-01	1.32E-16	5.47E-17
##	-33	-5	81	1.5	0.83	0.59	0.71	1.59E-16	1.14E-16	7.19E-01	1.32E-16	5.47E-17
##	33	0	81	1.5	0.48	0.46	0.47	1.55E-16	1.16E-16	7.52E-01	7.47E-17	6.67E-17
##	-33	0	81	1.5	0.48	0.46	0.47	1.55E-16	1.16E-16	7.52E-01	7.47E-17	6.67E-17
##	33	5	81	1.5	0.35	0.82	1.05	1.49E-16	1.13E-16	7.56E-01	5.18E-17	1.92E-16
##	-33	5	81	1.5	0.35	0.82	1.05	1.49E-16	1.13E-16	7.56E-01	5.18E-17	1.92E-16
##	22	22	81	1.5	0.37	0.90	1.17	1.62E-16	1.33E-16	8.18E-01	5.99E-17	2.34E-16
##	-22	22	81	1.5	0.37	0.90	1.17	1.62E-16	1.33E-16	8.18E-01	5.99E-17	2.34E-16
##	0	22	81	1.5	0.22	0.74	1.00	2.45E-16	1.92E-16	7.83E-01	5.44E-17	3.09E-16
##			Average=		0.61	0.69	0.86					
##												
##	0	-22	61	1.5	1.36	0.78	1.07	7.22E-16	4.73E-16	6.55E-01	9.85E-16	1.40E-16
##	22	-22	61	1.5	1.28	0.81	1.04	4.01E-16	2.77E-16	6.91E-01	5.13E-16	1.33E-16
##	-22	-22	61	1.5	1.28	0.81	1.04	4.01E-16	2.77E-16	6.91E-01	5.13E-16	1.33E-16
##	33	-5	61	1.5	1.23	0.87	1.05	2.58E-16	1.91E-16	7.39E-01	3.18E-16	1.30E-16
##	-33	-5	61	1.5	1.23	0.87	1.05	2.58E-16	1.91E-16	7.39E-01	3.18E-16	1.30E-16
##	33	0	61	1.5	0.67	0.66	0.66	2.45E-16	1.81E-16	7.41E-01	1.64E-16	1.57E-16
##	-33	0	61	1.5	0.67	0.66	0.66	2.45E-16	1.81E-16	7.41E-01	1.64E-16	1.57E-16
##	33	5	61	1.5	0.58	1.04	1.27	2.33E-16	1.80E-16	7.72E-01	1.34E-16	3.49E-16
##	-33	5	61	1.5	0.58	1.04	1.27	2.33E-16	1.80E-16	7.72E-01	1.34E-16	3.49E-16
##	22	22	61	1.5	0.50	1.24	1.61	2.61E-16	2.12E-16	8.14E-01	1.31E-16	5.15E-16
##	-22	22	61	1.5	0.50	1.24	1.61	2.61E-16	2.12E-16	8.14E-01	1.31E-16	5.15E-16
##	0	22	61	1.5	0.33	1.36	1.87	4.15E-16	3.37E-16	8.13E-01	1.35E-16	9.92E-16
##			Average=		0.85	0.95	1.18					
##												
##	0	-22	41	1.5	5.91	3.10	4.50	7.42E-16	5.57E-16	7.51E-01	4.38E-15	2.20E-16
##	22	-22	41	1.5	1.88	1.10	1.49	4.51E-16	3.65E-16	8.10E-01	8.49E-16	1.44E-16
##	-22	-22	41	1.5	1.88	1.10	1.49	4.51E-16	3.65E-16	8.10E-01	8.49E-16	1.44E-16
##	33	-5	41	1.5	1.52	1.03	1.27	3.16E-16	2.65E-16	8.39E-01	4.80E-16	1.69E-16
##	-33	-5	41	1.5	1.52	1.03	1.27	3.16E-16	2.65E-16	8.39E-01	4.80E-16	1.69E-16
##	33	0	41	1.5	0.74	0.75	0.75	3.10E-16	2.54E-16	8.22E-01	2.29E-16	2.33E-16
##	-33	0	41	1.5	0.74	0.75	0.75	3.10E-16	2.54E-16	8.22E-01	2.29E-16	2.33E-16
##	33	5	41	1.5	0.56	1.07	1.32	2.99E-16	2.44E-16	8.15E-01	1.67E-16	4.72E-16
##	-33	5	41	1.5	0.56	1.07	1.32	2.99E-16	2.44E-16	8.15E-01	1.67E-16	4.72E-16
##	22	22	41	1.5	0.43	1.41	1.91	3.52E-16	2.80E-16	7.95E-01	1.50E-16	8.47E-16
##	-22	22	41	1.5	0.43	1.41	1.91	3.52E-16	2.80E-16	7.95E-01	1.50E-16	8.47E-16
##	0	22	41	1.5	0.36	3.95	5.74	5.83E-16	4.41E-16	7.55E-01	2.12E-16	4.39E-15
##			Average=		1.38	1.48	1.98					
##												
##	0	-22	21	1.5	1.64	0.93	1.29	6.02E-16	5.47E-16	9.09E-01	9.86E-16	1.35E-16
##	22	-22	21	1.5	1.44	0.87	1.15	3.60E-16	3.45E-16	9.59E-01	5.17E-16	1.05E-16
##	-22	-22	21	1.5	1.44	0.87	1.15	3.60E-16	3.45E-16	9.59E-01	5.17E-16	1.05E-16
##	33	-5	21	1.5	1.37	0.92	1.14	2.53E-16	2.36E-16	9.34E-01	3.45E-16	1.18E-16
##	-33	-5	21	1.5	1.37	0.92	1.14	2.53E-16	2.36E-16	9.34E-01	3.45E-16	1.18E-16
##	33	0	21	1.5	0.66	0.66	0.67	2.44E-16	2.30E-16	9.42E-01	1.60E-16	1.63E-16
##	-33	0	21	1.5	0.66	0.66	0.67	2.44E-16	2.30E-16	9.42E-01	1.60E-16	1.63E-16
##	33	5	21	1.5	0.50	0.99	1.23	2.38E-16	2.22E-16	9.31E-01	1.19E-16	3.52E-16
##	-33	5	21	1.5	0.50	0.99	1.23	2.38E-16	2.22E-16	9.31E-01	1.19E-16	3.52E-16
##	22	22	21	1.5	0.36	1.08	1.44	2.91E-16	2.62E-16	9.03E-01	1.06E-16	5.23E-16
##	-22	22	21	1.5	0.36	1.08	1.44	2.91E-16	2.62E-16	9.03E-01	1.06E-16	5.23E-16
##	0	22	21	1.5	0.29	1.19	1.64	4.73E-16	4.07E-16	8.60E-01	1.39E-16	9.88E-16
##			Average=		0.88	0.93	1.18					
##												
##	0	-22	6	1.5	0.58	0.34	0.46	6.66E-16	5.56E-16	8.35E-01	3.86E-16	7.21E-17
##	22	-22	6	1.5	0.87	0.53	0.70	3.28E-16	2.93E-16	8.93E-01	2.86E-16	6.07E-17
##	-22	-22	6	1.5	0.87	0.53	0.70	3.28E-16	2.93E-16	8.93E-01	2.86E-16	6.07E-17
##	33	-5	6	1.5	1.10	0.71	0.90	2.01E-16	1.86E-16	9.27E-01	2.21E-16	6.32E-17
##	-33	-5	6	1.5	1.10	0.71	0.90	2.01E-16	1.86E-16	9.27E-01	2.21E-16	6.32E-17
##	33	0	6	1.5	0.50	0.49	0.49	1.87E-16	1.73E-16	9.24E-01	9.29E-17	9.12E-17
##	-33	0	6	1.5	0.50	0.49	0.49	1.87E-16	1.73E-16	9.24E-01	9.29E-17	9.12E-17

	X	Y	Z	Energy	Test 1	Test 2	Test 3	EDE	ED	ED/EDE	Dosimeter Front	Dosimeter Back
##	33	5	6	1.5	0.36	0.80	1.02	1.81E-16	1.67E-16	9.22E-01	6.45E-17	2.24E-16
##	-33	5	6	1.5	0.36	0.80	1.02	1.81E-16	1.67E-16	9.22E-01	6.45E-17	2.24E-16
##	22	22	6	1.5	0.29	0.80	1.05	2.22E-16	2.07E-16	9.31E-01	6.56E-17	2.90E-16
##	-22	22	6	1.5	0.29	0.80	1.05	2.22E-16	2.07E-16	9.31E-01	6.56E-17	2.90E-16
##	0	22	6	1.5	0.19	0.63	0.85	3.58E-16	3.12E-16	8.73E-01	6.90E-17	3.84E-16
##			Average=		0.58	0.64	0.80					
##												
##	0	-22	-21	1.5	0.54	0.30	0.42	2.54E-16	2.03E-16	8.01E-01	1.37E-16	1.60E-17
##	22	-22	-21	1.5	0.74	0.43	0.59	1.65E-16	1.37E-16	8.29E-01	1.23E-16	1.81E-17
##	-22	-22	-21	1.5	0.74	0.43	0.59	1.65E-16	1.37E-16	8.29E-01	1.23E-16	1.81E-17
##	33	-5	-21	1.5	1.12	0.65	0.88	9.32E-17	7.66E-17	8.22E-01	1.04E-16	1.77E-17
##	-33	-5	-21	1.5	1.12	0.65	0.88	9.32E-17	7.66E-17	8.22E-01	1.04E-16	1.77E-17
##	33	0	-21	1.5	0.31	0.31	0.31	8.89E-17	7.22E-17	8.12E-01	2.72E-17	2.72E-17
##	-33	0	-21	1.5	0.31	0.31	0.31	8.89E-17	7.22E-17	8.12E-01	2.72E-17	2.72E-17
##	33	5	-21	1.5	0.20	0.72	0.98	8.39E-17	6.88E-17	8.20E-01	1.68E-17	1.04E-16
##	-33	5	-21	1.5	0.20	0.72	0.98	8.39E-17	6.88E-17	8.20E-01	1.68E-17	1.04E-16
##	22	22	-21	1.5	0.18	0.68	0.94	9.99E-17	8.50E-17	8.51E-01	1.82E-17	1.19E-16
##	-22	22	-21	1.5	0.18	0.68	0.94	9.99E-17	8.50E-17	8.51E-01	1.82E-17	1.19E-16
##	0	22	-21	1.5	0.13	0.51	0.70	1.53E-16	1.23E-16	8.07E-01	1.93E-17	1.36E-16
##			Average=		0.48	0.53	0.71					
##												
##	0	-22	-41	1.5	0.77	0.42	0.59	1.08E-16	8.22E-17	7.59E-01	8.33E-17	7.42E-18
##	22	-22	-41	1.5	0.88	0.48	0.68	8.50E-17	6.73E-17	7.92E-01	7.48E-17	7.67E-18
##	-22	-22	-41	1.5	0.88	0.48	0.68	8.50E-17	6.73E-17	7.92E-01	7.48E-17	7.67E-18
##	33	-5	-41	1.5	1.32	0.74	1.03	4.85E-17	3.72E-17	7.67E-01	6.42E-17	7.82E-18
##	-33	-5	-41	1.5	1.32	0.74	1.03	4.85E-17	3.72E-17	7.67E-01	6.42E-17	7.82E-18
##	33	0	-41	1.5	0.24	0.24	0.24	4.50E-17	3.41E-17	7.57E-01	1.10E-17	1.07E-17
##	-33	0	-41	1.5	0.24	0.24	0.24	4.50E-17	3.41E-17	7.57E-01	1.10E-17	1.07E-17
##	33	5	-41	1.5	0.19	0.88	1.22	4.28E-17	3.27E-17	7.65E-01	8.16E-18	6.69E-17
##	-33	5	-41	1.5	0.19	0.88	1.22	4.28E-17	3.27E-17	7.65E-01	8.16E-18	6.69E-17
##	22	22	-41	1.5	0.14	0.77	1.09	5.18E-17	4.13E-17	7.98E-01	7.03E-18	7.30E-17
##	-22	22	-41	1.5	0.14	0.77	1.09	5.18E-17	4.13E-17	7.98E-01	7.03E-18	7.30E-17
##	0	22	-41	1.5	0.15	0.59	0.81	7.60E-17	5.75E-17	7.57E-01	1.12E-17	7.82E-17
##			Average=		0.54	0.60	0.83					
##												
##	0	-22	-61	1.5	0.93	0.51	0.72	5.76E-17	4.18E-17	7.25E-01	5.39E-17	5.27E-18
##	22	-22	-61	1.5	0.97	0.52	0.74	4.82E-17	3.68E-17	7.62E-01	4.68E-17	3.17E-18
##	-22	-22	-61	1.5	0.97	0.52	0.74	4.82E-17	3.68E-17	7.62E-01	4.68E-17	3.17E-18
##	33	-5	-61	1.5	1.25	0.69	0.97	2.66E-17	1.94E-17	7.28E-01	3.32E-17	3.60E-18
##	-33	-5	-61	1.5	1.25	0.69	0.97	2.66E-17	1.94E-17	7.28E-01	3.32E-17	3.60E-18
##	33	0	-61	1.5	0.22	0.22	0.22	2.44E-17	1.76E-17	7.20E-01	5.37E-18	5.27E-18
##	-33	0	-61	1.5	0.22	0.22	0.22	2.44E-17	1.76E-17	7.20E-01	5.37E-18	5.27E-18
##	33	5	-61	1.5	0.19	0.81	1.12	2.29E-17	1.67E-17	7.31E-01	4.34E-18	3.29E-17
##	-33	5	-61	1.5	0.19	0.81	1.12	2.29E-17	1.67E-17	7.31E-01	4.34E-18	3.29E-17
##	22	22	-61	1.5	0.13	0.93	1.33	2.85E-17	2.20E-17	7.71E-01	3.59E-18	4.94E-17
##	-22	22	-61	1.5	0.13	0.93	1.33	2.85E-17	2.20E-17	7.71E-01	3.59E-18	4.94E-17
##	0	22	-61	1.5	0.19	0.76	1.05	3.88E-17	2.84E-17	7.31E-01	7.22E-18	5.21E-17
##			Average=		0.55	0.63	0.88					
##												
##	0	-22	-81	1.5	1.03	0.55	0.79	3.27E-17	2.33E-17	7.11E-01	3.36E-17	2.69E-18
##	22	-22	-81	1.5	1.17	0.61	0.89	2.92E-17	2.18E-17	7.44E-01	3.42E-17	1.53E-18
##	-22	-22	-81	1.5	1.17	0.61	0.89	2.92E-17	2.18E-17	7.44E-01	3.42E-17	1.53E-18
##	33	-5	-81	1.5	1.21	0.67	0.94	1.60E-17	1.14E-17	7.13E-01	1.94E-17	1.89E-18
##	-33	-5	-81	1.5	1.21	0.67	0.94	1.60E-17	1.14E-17	7.13E-01	1.94E-17	1.89E-18
##	33	0	-81	1.5	0.28	0.28	0.28	1.40E-17	9.82E-18	7.03E-01	3.98E-18	3.81E-18
##	-33	0	-81	1.5	0.28	0.28	0.28	1.40E-17	9.82E-18	7.03E-01	3.98E-18	3.81E-18
##	33	5	-81	1.5	0.22	0.93	1.29	1.29E-17	9.22E-18	7.17E-01	2.79E-18	2.11E-17
##	-33	5	-81	1.5	0.22	0.93	1.29	1.29E-17	9.22E-18	7.17E-01	2.79E-18	2.11E-17
##	22	22	-81	1.5	0.13	1.26	1.82	1.57E-17	1.21E-17	7.66E-01	2.07E-18	3.74E-17
##	-22	22	-81	1.5	0.13	1.26	1.82	1.57E-17	1.21E-17	7.66E-01	2.07E-18	3.74E-17
##	0	22	-81	1.5	0.19	0.99	1.39	1.95E-17	1.41E-17	7.25E-01	3.75E-18	3.47E-17
			Average=		0.60	0.75	1.05					