LEGEND:

REGION 1:

REGION 2:

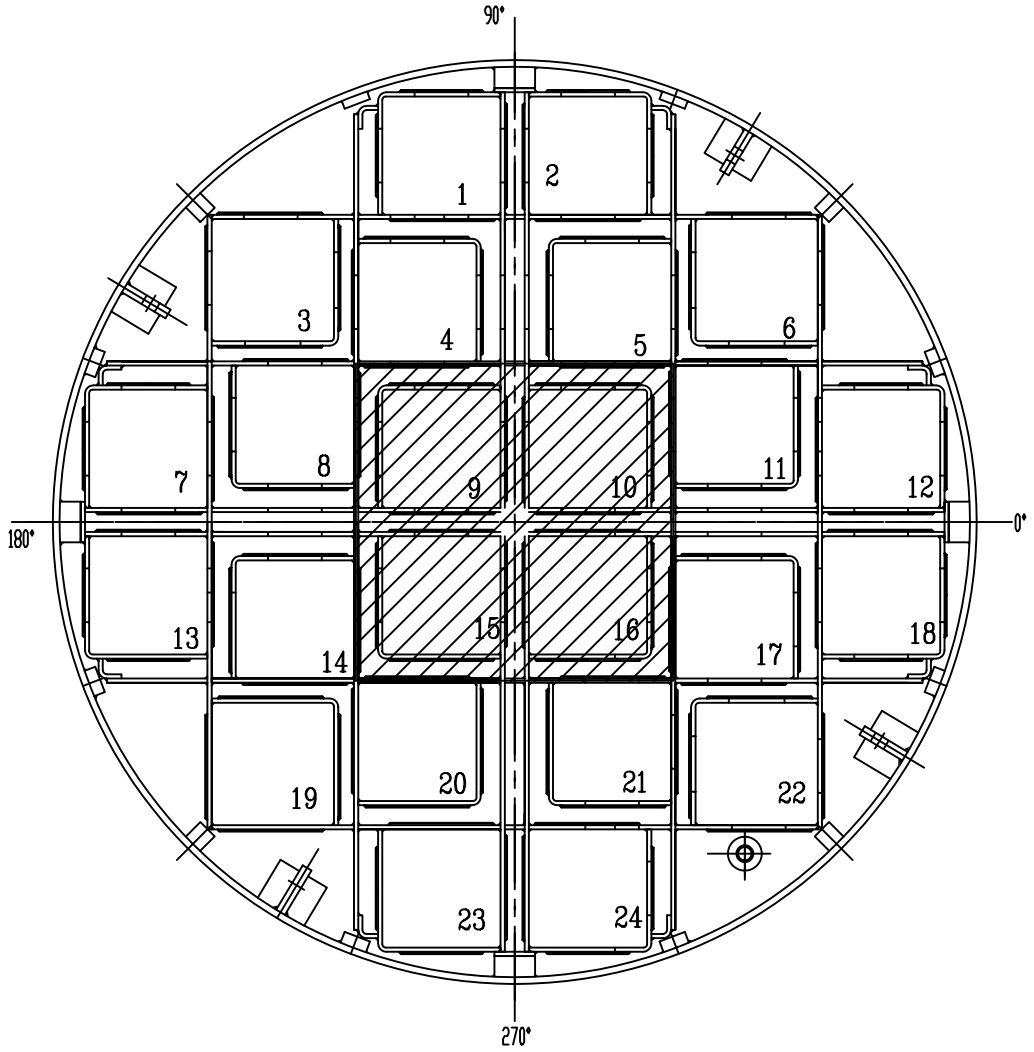

FIGURE 2.1-1
FUEL LOADING REGIONS - MPC-24