72-1015

NAC INTERNATIONAL

Atlanta Corporate Headquarters
3930 East Jones Bridge Road, Suite 200
Norcross, GA 30092
Phone 770-447-1144
Fax 770-447-1797
www.nacintl.com

November 19, 2004

U.S. Nuclear Regulatory Commission
11555 Rockville Pike
Rockville, MD 20852-2738

Attn: Document Control Desk

Subject: Submittal of Replacement Pages to Update the NAC-UMS® FSAR from Revision 3 to Revision 4 (Docket No. 72-1015)

References:
1. Submittal of NAC-UMS® FSAR, Amendment 3 (Docket No. 72-1015), NAC International, March 31, 2004
2. Amendment No. 3 to Certificate of Compliance No. 1015 for the NAC International, Inc. Universal Storage System (NAC-UMS®), U.S. Nuclear Regulatory Commission (NRC), March 31, 2004

In accordance with the requirements of 10 CFR 72.248(c)(6), NAC International (NAC) herewith provides five copies of the changed pages necessary to complete the 24-month update of the NAC-UMS® Universal Storage System Final Safety Analysis Report (FSAR) to Revision 4. A certification of the accuracy of the Revision 4 changes by a duly authorized officer of NAC is provided in Attachment 3.

Revision 4 of the NAC-UMS® FSAR is based on Reference 1 and incorporates the changes that have been approved and incorporated by NAC under the 10 CFR 72.48 regulation. All except one of the 10 CFR 72.48 changes that have been proposed since Revision 3 of the FSAR (Reference 1) was issued, are implemented in this FSAR revision. That one proposed 10 CFR 72.48 change, NAC-04-UMS-034 (DCR(L) 790-FSAR-3R), is not incorporated in the FSAR, Revision 4, because the Screening determined that prior NRC approval is required. The 10 CFR 72.48 Evaluation Summary Report for the NAC-UMS® Universal Storage System for the period of March 2004 – November 2004 is provided as Attachment 1. A detailed description of all of the changes that are incorporated in the FSAR, Revision 4, is provided in the List of Changes for the NAC-UMS® FSAR, Revision 4, as Attachment 2. Consistent with NAC administrative practice, NAC-UMS® FSAR, Revision 4, changed pages are uniquely identified by the revision number located in the header of each page. Revision bars mark the FSAR text changes. The NAC-UMS® FSAR, Revision 4, reflects all of the requirements contained in the NAC-UMS® CoC, Revision 0, Amendment 1, Amendment 2 and Amendment 3.

NMSS01

ED20040099

If you have any comments or questions, please contact me at my direct number, (678) 328-1321.

Sincerely,

T C Thompson

Thomas C. Thompson
Director, Licensing
Engineering

Attachment 1: 10 CFR 72.48 Evaluation Summary Report for the NAC-UMS® Universal Storage System (Period Covered: March 2004 – November 2004)

Attachment 2: 10 CFR 72.48 List of Changes for the NAC-UMS® Universal Storage System FSAR, Revision 3

Attachment 3: Certification of the Accuracy of the Revision 4 Changes

Enclosures: Replacement pages to update the NAC-UMS® Universal Storage System Final Safety Analysis Report from Revision 3 to Revision 4 (5 copies)

cc: Glenn Michael - APS (w/o encl.)
John Niles - MY (w/o encl.)
Keith Waldrop - Duke (w/o encl.)

Attachment 1

10 CFR 72.48 Evaluation Summary Report

for the

NAC-UMS® Universal Storage System
(Docket No. 72-1015)

Period Covered: March 2004 – November 2004

NAC International

November 2004

72.48 Determination Checklist ID #NAC-04-UMS-009

Change Description

Revises Chapters 4 and 8 to provide flexibility in the timing of water drainage operation during the closing and preparation of the transportable storage canister for the PWR configuration.

Chapter 4, pages 4.1-5, 4.4.1-27, 4.4.1-28, 4.4.3-1 through 4.4.3-4 & 4.4.3-17; Chapter 8, pages 8.1.1-2, 8.1.1-3 & 8.1.1-10.

Source of Change: 72.48 Determination Checklist ID #NAC-04-UMS-009

Originating Document: DCR(L) 790-FSAR-3A

This DCR(L) revises Chapters 4 and 8 (PWR configuration only) to:

1. Provide extended time limits for canister water drainage.
2. Define actions required if time limits for water drainage are not met.
3. Revise the alternate methods of establishing time limits for water drainage by measurement of water temperature.

Evaluation of the changes is documented in NAC Calculation EA790-3206, Revision 6.

72.48 Determination Checklist ID #NAC-04-UMS-016

Change Description

Revises Chapter 1, Table 1.2-6, Vertical Concrete Cask Fabrication Specification Summary, to permit the use of current ASTM standards rather than referencing ASTM standards that may be outdated. Section 1.7, References, is also revised to eliminate month/year indicators from all ASTM references.

Chapter 1, pages 1.2-27, 1.7-2 & 1.7-3.

Source of Change: 72.48 Determination Checklist ID #NAC-04-UMS-016

Originating Document: DCR(L) 790-FSAR-3B

These changes permit the use of current ASTM standards rather than referencing ASTM standards that may be outdated. Each ASTM standard is revised as necessary by an ASTM committee in order to improve the associated testing methods. This is an evolutionary process that does not adversely affect material capability values that are set by the licensee based on design code allowances. Additionally, since testing firms are not required to retain outdated versions and equipment, specifying performance of testing to outdated ASTM requirements can become impractical or prohibitive.

72.48 Determination Checklist ID #NAC-04-UMS-017

Change Description

Revises Bases Section C3.1.1, CANISTER Maximum Time in Vacuum Drying, Action A.2.1.1, and Bases Section C3.1.4, CANISTER Maximum Time in the TRANSFER CASK, Action A.1.1, to provide two alternatives to achieve cooling water flow within the Transfer Cask annulus and maintain the spent fuel cladding and Canister material temperatures within design analyses bases.

Chapter 12, pages 12C3-11 & 12C3-22.

Source of Change: 72.48 Determination Checklist ID #NAC-04-UMS-017

Originating Document: DCR(L) 790-FSAR-3C

This DCR(L) changes LCO 3.1.1 and LCO 3.1.4 to provide two alternative methods for cooling of the canister during in-pool cooling operations if the time limits of the two LCOs are not met. If the Transfer Cask and Canister are both submerged below the spent fuel pool water level, natural convection circulation of the pool water will occur to maintain the cooling water flow. If only the canister is submerged below the water level, the annulus fill system is required to be operating to replace the natural circulation of the pool water and maintain the cooling water flow.

Detailed analysis information is provided in NAC Calculation EA 790-3211, Rev. 0, "CFD Analysis of Natural Convection of Water between the Canister Shell and the Inner Surface of Transfer Cask."

72.48 Determination Checklist ID #NAC-04-UMS-018

Change Description

Revises Chapter 1, Section 1.2.1.5.8, Rigging and Slings, to provide cask users the flexibility of using other slings to perform the numerous required lifts, provided that all applicable safety requirements are met.

Chapter 1, page 1.2-11.

Source of Change: 72.48 Determination Checklist ID #s NAC-04-UMS-018

Originating Document: DCR(L) 790-FSAR-3D

The slings discussed in Section 1.2.1.5.8 are the standard set provided by NAC. For flexibility, this DCR(L) provides the option for the cask users to use other slings, as needed, to perform the numerous required lifts of the UMS® components, provided that all applicable safety requirements are met.

72.48 Determination Checklist ID #NAC-04-UMS-019

Change Description

Revises Chapter 1, Section 1.2.1.5, Auxiliary Equipment, to include a description of a Transporter.

Chapter 1, page 1.2-10.

Source of Change: 72.48 Determination Checklist ID #NAC-04-UMS-019

Originating Document: DCR(L) 790-FSAR-3E

The list of ancillary equipment in Section 1.2.1, Page 1.2-1, lists a heavy-haul trailer or transporter. The list of auxiliary equipment in Section 1.2.1.5 gives a description of a heavy-haul trailer but does not describe a transporter. This oversight is corrected by this DCR(L).

72.48 Determination Checklist ID #NAC-04-UMS-020

Change Description

Revises Chapters 1, 2, 3, 4, 5,6 & 11 by replacing the specific term "Zircaloy" with the generic term "zirconium alloy" in all of the appropriate places. Two existing references to "zirconium rods(s)" have been changed to "zirconium alloy rods(s)" and all references to "hollow ... rods" have been changed to "hollow ... tubes."

Chapter 1, pages 1.1-2, 1.2-7, 1.3-3 & 1.5-22; Chapter 2, pages 2.1-1, 2.1.1-2, 2.1.2-2, 2.1.3-3 & 2.1.3-9; Chapter 3, pages 3.4.1-2, 3.5-1 & 3.6-2; Chapter 4, pages 4-v, 4.2-5, 4.5-2, .4.5-3 & 4.5-6; Chapter 5, pages 5.3-11, 5.3-12, 5.3-22, 5.3-23, 5.3-25, 5.3-26, 5.6.1-1, 5.6.1-3 & 5.6.1-5; Chapter 6, pages 6.2-1, 6.3-7, 6.3-8, 6.4-1, 6.6.1-4 through 6.6.1-7 & 6.6.1-15; Chapter 11, pages 11.2.15-25, 11.2.15-29 & 11.2.15.32.

Source of Change: 72.48 Determination Checklist ID #NAC-04-UMS-020

Originating Document: DCR(L) 790-FSAR-3F

To allow material flexibility, the specific term "Zircaloy" is being replaced with the generic term "zirconium alloy" in all of the appropriate places in the UMS® FSAR. The term will not be changed if it is in the title of a reference or if the specific word "Zircaloy" is required for clarity. The word "hollow" is used to describe a tube; the word "solid" is used to describe a rod.

72.48 Determination Checklist ID #NAC-04-UMS-021

Change Description

Revises Sections 1.2.2, 3.4.3, 3.4.3.2 and 8.0 and Table 8.1.1-1 to allow alternative canister lifting equipment designs, in lieu of canister lifting sling sets, based on the satisfactory completion of a site-specific analysis and evaluation.

Chapter 1, page 1.2-13; Chapter 3, pages 3.4.3-1 & 3.4.3-28; Chapter 8, pages 8-1 & 8.1.1-8 (Table 8.1.1-1).

Source of Change: 72.48 Determination Checklist ID #NAC-04-UMS-021

Originating Document: DCR(L) 790-FSAR-3G

Sections 1.2.2, 3.4.3, 3.4.3.2 and 8.0 and Table 8.1.1-1are being revised to allow the use of alternative lifting devices, in lieu of the canister sling systems, based on a site-specific analysis and evaluation. The intent is to allow other lifting designs to be used based on the User's acceptance without defining or analyzing possible alternative designs in the FSAR.

72.48 Determination Checklist ID #NAC-04-UMS-022

Change Description

Revises Chapter 3, Section 3.4.1.2.2, to change the amount of water removed from the canister from 50 gallons to 70 gallons.

Chapter 1, page 3.4.1-8.

Source of Change: 72.48 Determination Checklist ID #NAC-04-UMS-022

Originating Document: DCR(L) 790-FSAR-3H

This DCR(L) change to the amount of water removed from the canister (50 gallons to 70 gallons) to permit the removal of the shield lid makes the amount of water removed consistent with the Chapter 8 canister loading procedure (page 8.1.1-4, item 19) and canister unloading procedure (page 8.3.3, item 16), as well as Chapter 9 (page 9.1-5).

72.48 Determination Checklist ID #NAC-04-UMS-023

Change Description

Revises Chapter 4, Sections 4.4.1 & 4.4.3, to add saturated steam to the media considered in the thermal analysis for transfer conditions.

Chapter 4, pages 4.4.1-2, 4.4.1-30 (Figure 4.4.1.3-2) 4.4.1-35, 4.4.1-38, 4.4.1-41 (Figure 4.4.1.6-1), 4.4.1-42 (Figure 4.4.1.6-2), 4.4.1-43 (Figure 4.4.1.6-3), & Section 4.4.3 (page 4.4.3-1).

Source of Change: 72.48 Determination Checklist ID #NAC-04-UMS-023

Originating Document: DCR(L) 790-FSAR-3I

This DCR(L) revises the description of the thermal models and transient analyses for the transfer conditions to reflect the fact that the media inside the canister is considered to be saturated steam during the first four hours of the vacuum conditions. The details are presented in NAC Calculation Nos. EA790-3006, Rev. 0; EA790-3007, Rev. 0; EA790-3206, Rev. 6; and EA790-3207, Rev. 1. There is no change in the thermal models and analyses.

72.48 Determination Checklist ID #NAC-04-UMS-024

Change Description

Revises Chapter 8, Section 8.0, to clarify the wording regarding cask operating procedures meeting the ALARA principle.

Chapter 8, page 8-2.

Source of Change: 72.48 Determination Checklist ID #NAC-04-UMS-024

Originating Document: DCR(L) 790-FSAR-3J

This editorial change clarifies the meaning of this paragraph and eliminates the implication that if you do anything different than what is outlined in this section, the ALARA principle will not be followed.

72.48 Determination Checklist ID #NAC-04-UMS-025

Change Description

Revises Chapter 7, Section 7.1.3.2, to make TSC body circumferential welds optional.

Chapter 7, page 7.1-5.

Source of Change: 72.48 Determination Checklist ID #NAC-04-UMS-025

Originating Document: DCR(L) 790-FSAR-3K

This change makes the use of circumferential welds on the TSC body optional, as shown in Table 7.1-1. This change does not affect the circumferential weld to join the bottom plate to the shell.

72.48 Determination Checklist ID #NAC-04-UMS-026

Change Description

Revises Chapter 1, Section 1.3.1, 2nd paragraph, to delete No.4. The subsequent steps are renumbered accordingly.

Chapter 1, pages 1.3-1 & 1.3-2.

Source of Change: 72.48 Determination Checklist ID #NAC-04-UMS-026

Originating Document: DCR(L) 790-FSAR-3L

This DCR(L) change removes the MTU weight limits from Chapter 1, Section 1.3.1, as this information is not necessary here. The tables in Chapter 6 specify the individual fuel assembly limits that must be observed.

72.48 Determination Checklist ID #NAC-04-UMS-027

Change Description

Revises Chapter 9, Section 9.2.3, to include a reference to NAC's "Report on the Thermal Performance of the NAC-UMS® System at the Palo Verde Nuclear Generating Station (PVNGS) Independent Spent Fuel Storage Installation" dated 5/30/03.

Chapter 9, pages 9.2-2 & 9.2-3.

Source of Change: 72.48 Determination Checklist ID #NAC-04-UMS-027

Originating Document: DCR(L) 790-FSAR-3M

This UMS® cask performance report information is added to Section 9.2.3, Required Surveillance of First Storage System Placed in Service, to verify compliance with the requirements of NAC-UMS® Technical Specification A 5.3, "Special Requirements for the First System Placed in Service" and compliance with 10 CFR 72.4. The report concludes that the measured temperature data demonstrates that the thermal models and analysis results reported in the NAC-UMS® FSAR correctly represent the heat transfer characteristics of the storage system.

72.48 Determination Checklist ID #NAC-04-UMS-030

Change Description

Revises Chapter 8, Section 8.1.1, the 1st Note of Step 12, to reduce the maximum forced air cooling temperature from 100°F to 76°F in accordance with Calculation EA790-3206, Revision 6.

Chapter 8, page 8.1.1-2.

Source of Change: 72.48 Determination Checklist ID #NAC-04-UMS-030

Originating Document: DCR(L) 790-FSAR-3N

This UMS® FSAR change corrects an inconsistency between NAC's Calculation EA790-3206, Revision 6, and Technical Specification limits and the TSC loading information in Section 8.1.1, Step 12. The correct maximum forced air cooling temperature of the 375 CFM air being supplied to the 8 transfer cask lower inlets is 76°F.

72.48 Determination Checklist ID #NAC-04-UMS-031

Change Description

Revises Chapter 7, Section 7.1.3.3, to delete testing, inspection and examination requirements and add reference to Chapter 9. Also, replaces all of the references to deleted Section 7.1.3.3 with references to various sections in Chapter 9.

Chapter 7, pages 7.1-2, 7.1-4, 7.1-5 & 7.1-6.

Source of Change: 72.48 Determination Checklist ID #NAC-04-UMS-031

Originating Document: DCR(L) 790-FSAR-3O

The list (items 1–12) of testing, inspection and examination requirements to ensure the satisfactory performance of the confinement vessel is deleted from Section 7.1.3.3, as the detailed test program for the confinement vessel and components is described in Chapter 9. This change eliminates the risk of having conflicting information in Chapters 7 and 9. Therefore, all references to deleted Section 7.1.3.3 are replaced with references to various sections in Chapter 9.

72.48 Determination Checklist ID #NAC-04-UMS-032

Change Description

Revises Chapter 7, Sections 7.1.1 & 7.1.1.2, to state that the canister is designed, fabricated and tested in accordance with NB requirements, except for approved Code exceptions as listed in Table B3-1 of Appendix B of the CoC.

Chapter 7, pages 7.1-2 & 7.1-3.

Source of Change: 72.48 Determination Checklist ID #NAC-04-UMS-032

Originating Document: DCR(L) 790-FSAR-3P

The wording in Sections 7.1.1 & 7.1.1.2 is revised to state that the canister is designed, fabricated and tested in accordance with NB requirements, except for approved Code exceptions as listed in Table B3-1 of Appendix B of the CoC. These editorial changes are made to ensure consistency of information between the UMS® FSAR and the UMS® Technical Specifications.

72.48 Determination Checklist ID #NAC-04-UMS-033

Change Description

Revises Chapter 8, Section 8.1, to clarify the use of the proper transfer cask extension prior to initiating the canister-loading process. Revises Section 8.1.2, Step 7, to delete the 2nd note regarding the transfer cask extension.

Chapter 8, pages 8.1-1 & 8.1.2-1.

Source of Change: 72.48 Determination Checklist ID #NAC-04-UMS-033

Originating Document: DCR(L) 790-FSAR-3Q

For clarification, a sentence is added to Section 8.1 stating that the user shall verify that the appropriate transfer cask extension is installed and torqued prior to initiating the canister-loading process. The 2nd note to Step 7 in Section 8.1.2 should not be included at this point in the VCC loading process and is, therefore, deleted.

Note: **10 CFR 72.48 ID No. NAC-04-UMS-034 & DCR(L) 790-FSAR-3R** were completed to update the ASME Code Case referenced in Chapter 9 from N-595-2 to N-595-4. Since the ASME Code Case N-595-4 also needs to be referenced in the UMS® FSAR CoC, Appendix B, Table B3-1, List of ASME Code Exceptions for the NAC-UMS® SYSTEM, this change cannot be implemented until approval is received from the NRC.

Therefore, the changes to Chapter 9 and the UMS® Tech Specs are pending as of 11/19/04.

72.48 Determination Checklist ID #NAC-04-UMS-035

Change Description

Revises Chapter 8, Section 8.2, Step 4, to correct this portion of the procedure for removal of the loaded TSC from the VCC.

Chapter 8, page 8.2-2.

Source of Change: 72.48 Determination Checklist ID #NAC-04-UMS-035

Originating Document: DCR(L) 790-FSAR-3S

The 1st sentence of Step 4 of the procedure to remove the loaded TSC from the VCC is incorrectly stated. This DCR(L) corrects the order in which unloading operations are performed.

72.48 Determination Checklist ID #NAC-04-UMS-036

Change Description

Revises Chapter 8, Sections 8.2 & 8.3, to ensure consistency with LCO 3.1.4, Canister Maximum Time in Transfer Cask.

Chapter 8, pages 8.2-2 & 8.3-1.

Source of Change: 72.48 Determination Checklist ID #NAC-04-UMS-036

Originating Document: DCR(L) 790-FSAR-3T

A Note is added to Section 8.2, Step 8, to monitor the time from the closing of the shield doors of the Transfer Cask until initiation of canister cooldown operations, or completion of transfer to a concrete cask or Universal Transport Cask in accordance with LCO 3.1.4. In Section 8.3, 1st paragraph, the two sentences regarding canister time in the transfer cask with or without forced air cooling are deleted. Both of these changes are to ensure consistency with LCO 3.1.4.

72.48 Determination Checklist ID #NAC-04-UMS-037

Change Description

Revises Chapter 1, Section 1.8, License Drawings, to incorporate Revision 11 of Drawing 790-561, Weldment, Structure, Vertical Concrete Cask (VCC), NAC-UMS; and Revision 17 of Drawing 790-585, Transportable Storage Canister (TSC), NAC-UMS.

Chapter 1, page 1.8-1.

Source of Change: 72.48 Determination Checklist ID #NAC-04-UMS-037

Originating Document: DCR(L) 790-FSAR-3U

This DCR(L) was prepared to incorporate the latest revisions of the above-listed drawings into the UMS® FSAR, Revision 3.

Revision 11 of Drawing 790-561 includes the following changes:

1. Adds stud weld symbol, TYP, to Item 17, on Sht 3 of 4, Zone D5.
2. Moves Item 26 attachment weld callout from top view to right side view on Sht 3 of 4, Zone F3. Adds alternate configuration, TYP, 1/8 fillet weld, both sides.
3. Adds two, optional, item 26 square nut to the center line, top of item 22 and the bottom of item 21, flush with the 68 inch radius feature.
4. Adds new # Delta Note symbol to assembly 94 callout Sht 3 of 4, Zone C8.
5. Adds new # Delta Note text, "Item # 12, may be fabricated from multiple plates. Seam(s) between plate sections must be full penetration welded.
6. Changes tapped hole callout, Sht 2 of 4, Zone F6 IS) 6X 1/2-13 UNC-2B <depth> 1.75 MIN., WAS) 6X 1/2-13 UNC-2B <depth> 1.75.
7. Changes tapped hole callout, Sht 2 of 4, Zone F6: delete "do not break thru".
8. Updates the drawing graphics in section A-A and section B-B to show the tapped hole through the flange.
9. Detail G-G (both): Updates graphics to show the side view of Item 12 under Item 13 (See graphics in Section D-D).
10. Changes end profile and add an optional dimension, R 68 TYP, to the outside edge of Item 14.
11. Adds an optional dimension Sht 3 of 4, from edge to edge of the outside of the R68 TYP dimension of: 136 +0, -1/4 TYP.

72.48 Determination Checklist ID #NAC-04-UMS-037 (cont'd)

12. Adds an optional, 45°±5°X 1/4 TYP, chamfer callout to Sht 2 of 4, Section A-A, to the inside, vertical edge(s) of the liner shell opening for the inlet tunnel.
13. Adds optional weld callouts between Item 11 and Item 14:
    a) (Horz. Joint) 3/8 fillet across top of Item 11 to Item 14, "TYP, where geometry permits"
    b) (Vert. Joint) 3/8 fillet, "TYP" on the inside of the ring, Item 11 to Item 14
    c) (Vert. Joint) 3/8 bevel, flush, "TYP" on the outside of the ring, Item 11 to Item 14
14. Revises Item 13 (Inlet Side) to add an optional chamfer.
15. Adds a leader callout in Detail G-G (Optional Configuration) Sheet 4, Zone A4 pointing to the new optional chamfer to read: "Leave unwelded for cavity drainage". Revises graphics to show correct pictorial view of Item 13 against Item 15.
16. Adds a leader callout in Detail G-G (Optional Configuration) Sheet 4, Zone C2 pointing to the new optional chamfer to read: "Leave unwelded for cavity drainage". Shows a cut-away from the optional Item 34 in the area of the new optional chamfer to place the new leader callout

Revision 17 of Drawing 790-585 includes the following changes:

1. Changes Delta Note 8 to read: "Items 22 and 24 shall be field modified if required to fit flush or below the top surface of the respective lid during installation. Item 24 may be ground to facilitate a press fit during installation. Item 23 is to be installed for the storage configuration (790-590) and is to be removed for the transport configuration (790-516)."
2. Change dimension Sht 3 of 3, Zone B4 IS) 2.25/2.75 WAS) 2.25 MIN.
3. Revises Delta note 3 to read: IS)"...(135±15 ft-lbs for Metal seals)..."; WAS) "...(135±5 ft-lbs for Metal seals)..."

72.48 Determination Checklist ID #NAC-04-UMS-039

Change Description

Revises Chapter 8, Section 8.1.1, Step 59, by deleting the requirement for smear surveys of the upper accessible surfaces of the canister and renumbers subsequent items accordingly. Adds a note to Step 17 of Section 8.1.2 regarding the performance of removable contamination surveys on the canister exterior and/or transfer cask interior surfaces as required to confirm canister surface contamination is less than the limits specified in Technical Specification LCO 3.2.1. Revises C 3.2.1, CANISTER Surface Contamination, of the BASES to be consistent with the modified information in Chapter 8.

Chapter 8, pages 8.1.1-6 & 8.1.2-2; Chapter 12, pages 12C3-30 & 12C3-31.

Source of Change: 72.48 Determination Checklist ID #NAC-04-UMS-039

Originating Document: DCR(L) 790-FSAR-3V

This DCR(L) deletes Step 59 of Section 8.1.1, as smear surveys of the upper accessible surfaces of the canister are not required to be performed, as a complete canister surface smear process is performed on the full exterior of the canister following transfer into the VCC. Performing a smear survey of the canister surfaces in the small annulus gap is not in accordance with good ALARA practices.

In place of this step, a note is added to Section 8.1.2, Step 17, as follows: "Perform removable contamination surveys on the canister exterior and/or transfer cask interior surfaces as required to confirm canister surface contamination is less than the limits specified in Technical Specification LCO 3.2.1."

These changes ensure compliance with LCO 3.2.1. Additionally, C 3.2.1, CANISTER Surface Contamination, of the BASES is revised to be consistent with the modified information in Chapter 8.

72.48 Determination Checklist ID #NAC-04-UMS-042

Change Description

Revises Chapter 9, Section 9.1.2.2, by deleting the specific requirements for the design and testing of the mobile lifting frame and clarifying the lug testing requirements.

Chapter 9, page 9.1-6.

Source of Change: 72.48 Determination Checklist ID #NAC-04-UMS-042

Originating Document: DCR(L) 790-FSAR-3W

The concrete cask lifting lugs are not specified as a special lifting device in the FSAR. The lugs are evaluated for structural adequacy in Chapter 3 using the minimum strength criteria of 3X yield and 5X ultimate. The one-time acceptance load test of the lifting lugs to 150% of the dynamic lifted load is appropriate for the load being handled. The specified requirements for the site-specific mobile lifting frame are outside of NAC's responsibility and have been removed from the FSAR.

72.48 Determination Checklist ID #NAC-04-UMS-044

Change Description

Revises Chapter 3, Section 3.4.1, Loading Operations, and Chapter 8, Section 8.1.1, Loading and Closing the Transportable Storage Canister, to clarify the requirements and procedures for use of the hydrogen detector.

Chapter 3, pages 3.4.1-6 & 3.4.1-7; Chapter 8, page 8.1.1-4.

Source of Change: 72.48 Determination Checklist ID #NAC-04-UMS-044

Originating Document: DCR(L) 790-FSAR-3X

The loading and unloading procedures provided in Chapter 8 detail the specific procedural requirements for use of the hydrogen detector to identify potential high levels of flammable hydrogen. The description of the use and purpose of the hydrogen detector provided in Sections 3.4.1 and 8.1.1 are revised to correctly define the requirements for the use and operation of the hydrogen detector.

72.48 Determination Checklist ID #NAC-04-UMS-045

Change Description

Revises Chapter 3, Section 3.4.3, Lifting Devices, to provide a clearer description of the types of equipment that can be used to lift and handle the major UMS® system components (i.e., transfer cask, TSC and VCC).

Chapter 3, page 3.4.3-1.

Source of Change: 72.48 Determination Checklist ID #NAC-04-UMS-045

Originating Document: DCR(L) 790-FSAR-3Y

The introductory paragraph of Section 3.4.3, Lifting Devices, is revised to clarify the types and descriptions of equipment used to lift and handle the UMS® system major components. No new technical requirements are added and only evaluated lifting and handling methods are included.

72.48 Determination Checklist ID #NAC-04-UMS-046

Change Description

Revises Chapter 9, Sections 9.1.1, 9.1.1.1, 9.1.1.2, and 9.1.1.3 to incorporate appropriate welding, inspection and examination requirements from Chapter 7 and to remove redundancies within the revised sections.

Chapter 9, pages 9.1-1, 9.1-2, 9.1-3 & 9.3-1.

Source of Change: 72.48 Determination Checklist ID #NAC-04-UMS-046

Originating Document: DCR(L) 790-FSAR-3Z

The welding, inspection and examination requirements previously specified in Chapter 7, Section 7.1.3.3 were removed by DCR(L) 790-FSAR-3O and are now incorporated into Section 9.1.1 of Chapter 9. Redundancies within Sections 9.1.1, 9.1.1.1, 9.1.1.2 and 9.1.1.3 were corrected or removed. No new requirements were added and no current FSAR requirements were deleted. All changes are editorial.

72.48 Determination Checklist ID #NAC-04-UMS-049

Change Description

Revises Chapter 1, Section 1.8, License Drawings to incorporate Revision 10 of Drawing 790-575, BWR Fuel Tube, NAC-UMS; Revision 9 of Drawing 790-581, PWR Fuel Tube, NAC-UMS; Revision 11 of Drawing 790-605, BWR Fuel Tube, Oversized Fuel, NAC-UMS; and Revision 5 of Drawing 412-502, Fuel Can Details, Maine Yankee, NAC-UMS.

Chapter 1, pages 1.8-1 & 1.8-2.

Source of Change: 72.48 Determination Checklist ID #NAC-04-UMS-049

Originating Document: DCR(L) 790-FSAR-3AA

This DCR(L) was prepared to incorporate the latest revisions of the above-listed drawings into the UMS® FSAR, Revision 3.

Revision 10 of Drawing 790-575 changes the BOM Items 3 & 4 material callout: IS) Boral WAS) Boral/Metamic.

Revision 9 of Drawing 790-581 changes the dimension of Sht 2 of 2, Zone B6: IS) 8.29 MIN. WAS) 8.3 MIN. & changes the BOM Items 3 & 4 material callout: IS) Boral WAS) Boral/Metamic.

Revision 11 of Drawing 790-605 changes the BOM Items 3 & 4 material callout: IS) Boral WAS) Boral/Metamic.

Revision 5 of Drawing 412-502 adds the following notes:

"All welding procedures and qualifications to be in accordance with ASME Section IX."

"Visually inspect (VT) all welds in accordance with ASME Section V, Article 9. Acceptance per ASME Section III, NG-5360."

72.48 Determination Checklist ID #NAC-04-UMS-051

Change Description

Revises Chapter 1, Section 1.8, License Drawings to incorporate Revision 17 of Drawing 790-560, Assembly, Standard Transfer Cask (TFR), NAC-UMS; Revision 12 of Drawing 790-561, Weldment, Structure, Vertical Concrete Cask (VCC), NAC-UMS; Revision 14 of Drawing 790-562, Reinforcing Bar and Concrete Placement, Vertical Concrete Cask (VCC), NAC-UMS; Revision 18 of Drawing 790-584, Details, Canister, NAC-UMS; Revision 18 of Drawing 790-585, Transportable Storage Canister (TSC), NAC-UMS; and Revision 3 of Drawing 790-617, Door Stop, NAC-UMS.

Chapter 1, pages 1.8-1 & 1.8-2.

Source of Change: 72.48 Determination Checklist ID #NAC-04-UMS-051

Originating Document: DCR(L) 790-FSAR-3AB

This DCR(L) was prepared to incorporate the latest revisions of the above-listed drawings into the UMS® FSAR, Revision 3.

Revision 17 of Drawing 790-560 makes the following changes:

1. Adds ±1° tolerance to angular dimensions, 32X 11.3 and 32X 11.2 on Sht 3 of 6, Zone B6 & B4.
2. Adds ±.25 tolerance to dimension, Ø67.8, on Sht 3 of 6, Zone B5.
3. Changes dimension Sht 3 of 6, Zone A5 IS) Ø85.3±.3 WAS) Ø85.3±.25
4. Changes dimension Sht 6 of 6, Zone D6 & D5 IS) 4.0 WAS) 4.00
5. Changes dimension Sht 6 of 6, Zone D6 & D5 IS) 5.3 WAS) 5.25
6. Adds optional weld callouts to welds shown on Sht 6 of 6, Zones A6 & A5, full penetration bevel, flush, TYP
7. Adds optional components
8. Adds Delta note to read: "Items 49, 50, 51 and 52 are optional components." Add delta graphic to BOM to corresponding Items

Revision 12 of Drawing 790-561 adds an optional bevel weld callout, far side, "Seal weld, TYP" to Optional Configuration Detail E-E, for the vertical seam between Items 12 and 13; and updates the drawing border and deletes all weight and scale callouts from the field on the drawing.

Revision 14 of Drawing 790-562 makes the following changes:

1. Changes dimension Sht 2 of 7, Zone F3: IS) 7±2, WAS) 7
2. Changes BOM Item 28, description: IS) Drop-in anchor, WAS) McMaster Carr #97040A029

72.48 Determination Checklist ID #NAC-04-UMS-051(cont'd)

3. Changes BOM Item 29, description: IS) Drop-in anchor fastener, WAS) McMaster Carr #92351A542
4. Changes BOM Item 29, Name: IS) Screw, WAS) Lag Screw
5. Changes BOM Item 37, description: IS) Hex Head Cap Screw, WAS) 3/8-16UNC X 3/4 LG. Hex Head bolt
6. Changes BOM Item 37, Name and Delta Note 18 text: IS) Screen Screw, WAS) Screen Bolt
7. To Assy-94, Sht 2 of 7, Zone C5, adds a dimension leader to the top and bottom of the screen assembly: "Additional mounting holes, size and location optional, as required."
8. Adds a tolerance of ±3/16 to the '13/16 TYP' dimension and the '44 11/16' dimension on Sht 2 of 7, Zone C6 & C5 respectively.
9. Changes dimension, 2 places, Sht 7 of 7, Zone F6 & F2: IS) (13 3/4), WAS) (14)
10. Adds text to Delta Note 17: "...lifting nut, or may be located tangent to the diameter of item 9."
11. Adds a note to Balloon 41, Sht 5 of 7, Zone C8: "Optional"
12. Updates drawing border and delete all weight and scale callouts from the field on the drawing.

Revision 18 of Drawing 790-584 changes the dimension on Sht 3 of 3, Zone F3: IS) 15°±5°, WAS) 15° (quick disconnect port detail).

Revision 18 of Drawing 790-585 makes the following changes:

1. Deletes general drawing note 12.
2. Deletes general drawing note 19.
3. Changes delta note 3 to read; "...in the field to allow...."; deletes "by NAC"
4. Adds: "For ASME code stamped TSC's, ..." to the beginning of general drawing note 14. Changes general drawing note 14 to read: "....at least .72", for Maine Yankee canisters only."

Revision 3 of Drawing 790-617 changes the dimension leader callout, Sht 2 of 2, 7 places: IS) 790-560, WAS) 790-060.

72.48 Determination Checklist ID #NAC-04-UMS-052

Change Description

Identifies editorial changes/corrections in Chapters 3, 7 and 12 resulting from the preparation of Revision 4 of the UMS® FSAR.

Chapter 3, Page 3.4.2-1 (Figure 3.4.2-1); Chapter 7, pages 7.1-3, 7.1-5, 7.1-8 (Figure 7.1-2) & 7.5-1; Chapter 12, pages 12C3-9, 12C3-12, 12C3-13, 12C3-16, 12C3-19, 12C3-20, 12C3-22 & 12C3-24.

Source of Change: 72.48 Determination Checklist ID #NAC-04-UMS-052

Originating Document: DCR(L) 790-FSAR-3AC

Identifies editorial changes/corrections in Chapters 3, 7 and 12 resulting from the preparation of Revision 4 of the UMS® FSAR.

Attachment 2

List of Changes

for

NAC-UMS® FSAR, Revision 4
(Docket No 72-1015)

NAC International

November 2004

Based on NAC-UMS® FSAR, Amendment 3; and incorporating 10 CFR 72.48 changes for the period March through November 2004

Chapter/Page/ Figure/Table	Source of Change: 72.48/DCR(L)	Description of Change
Note: The List of Effective Pages and the Chapter Table of Contents, List of Figures and List of Tables have been revised accordingly to reflect the list of changes detailed below.		
Chapter 1		
Page 1.1-2	72.48/DCR(L) 790-FSAR-3F	1st line – changed "Zircaloy" to "zirconium alloy"
Page 1.2-7	72.48/DCR(L) 790-FSAR-3F	1st partial paragraph, 6th line – changed "Zircaloy" to "zirconium alloy"
Page 1.2-10	72.48/DCR(L) 790-FSAR-3E	Section 1.2.1.5.7 – added new section to describe Transporter; renumbered subsequent sections
Page 1.2-11	72.48/DCR(L) 790-FSAR-3E	Renumbered sections 1.2.1.5.9, 1.2.1.5.10 & 1.2.1.5.11;
	72.48/DCR(L) 790-FSAR-3D	Section 1.2.1.5.9, 1st paragraph – added last sentence to allow cask user the option of using other slings
Page 1.2-13	72.48/DCR(L) 790-FSAR-3G	6th bullet, 3rd sentence – changed "sling" to "slings"; added 4th sentence (parenthetical Note) 8th bullet – revised throughout 10th bullet, 2nd sentence – changed "lifting slings" to "lifting equipment"
Page 1.2-27, Table 1.2-6	72.48/DCR(L) 790-FSAR-3B	Added Note for clarification
Page 1.3-1	72.48/DCR(L) 790-FSAR-3L	Section 1.3.1 – deleted item #4 and renumbered subsequent item
Page 1.3-2	72.48/DCR(L) 790-FSAR-3L	Renumbered items #5-10
Page 1.3-3	72.48/DCR(L) 790-FSAR-3F	Section 1.3.2.1, 1st paragraph, 2nd bullet – changed "Zircaloy" to "zirconium alloy"; 3rd bullet – changed "Zircaloy" to "zirconium alloy"
Page 1.5-22, Table 1.5.1	72.48/DCR(L) 790-FSAR-3F	Area 1, Acceptance Criteria & Description of Compliance – changed "Zircaloy" to "zirconium alloy"
Page 1.7-2	72.48/DCR(L) 790-FSAR-3B	References 19, 20, 21, 22 & 23 – eliminated month/year indicators from all ASTM references
Page 1.7-3	72.48/DCR(L) 790-FSAR-3B	References 24, 26, 27 & 28 – eliminated month/year indicators from all ASTM references
Page 1.8-1	72.48/DCR(L) 790-FSAR-3U	Included the latest revisions of Drawings 790-561 & 790-585
	72.48/DCR(L) 790-FSAR-3AA	Included the latest revisions of Drawings 790-575 & 790-581
	72.48/DCR(L) 790-FSAR-3AB	Included the latest revisions of Drawings 790-560, 790-561, 790-562, 790-584 & 790-585
Page 1.8-2	72.48/DCR(L) 790-FSAR-3AA	Included the latest revisions of Drawings 790-605 & 412-502
Page 1.8-2	72.48/DCR(L) 790-FSAR-3AB	Included the latest revision of Drawing 790-617

Chapter/Page/ Figure/Table	Source of Change: 72.48/DCR(L)	Description of Change
Chapter 2		
Page 2.1-1	72.48/DCR(L) 790-FSAR-3F	Section 2.1, 2nd paragraph, 3rd & 4th sentences – changed "Zircaloy" to "zirconium alloy"
Page 2.1.1-2, Table 2.1.1-1	72.48/DCR(L) 790-FSAR-3F	Cladding Material – changed "Zircaloy" to "Zirconium Alloy"
Page 2.1.2-2, Table 2.1.2-1	72.48/DCR(L) 790-FSAR-3F	Cladding Material – changed "Zircaloy" to "Zirconium Alloy";2nd General Note – changed "Zircaloy" to "zirconium alloy"
Page 2.1.3-3	72.48/DCR(L) 790-FSAR-3F	Section 2.1.3.1.3, 3rd paragraph, 3rd sentence – changed "Zircaloy" to "zirconium alloy"
Page 2.1.3-9, Table 2.1.3-1	72.48/DCR(L) 790-FSAR-3F	6th & 10th rows under 1st column header – changed "Zircaloy" to "Zirconium Alloy"
Chapter 3		
Page 3.4.1-2	72.48/DCR(L) 790-FSAR-3F	5th line – changed "Zircaloy" to "zirconium alloy" Section 3.4.1.2, 3rd paragraph, 1st sentence – changed "Zircaloy" to "zirconium alloy"
Page 3.4.1-6	72.48/DCR(L) 790-FSAR-3X	4th paragraph – revised throughout
Page 3.4.1-7	72.48/DCR(L) 790-FSAR-3X	Partial paragraph – revised throughout; 1st full paragraph – added new text
Page 3.4.1-8	72.48/DCR(L) 790-FSAR-3H	1st paragraph, 11th sentence – changed "50 gallons" to "70 gallons"
Page 3.4.2-2, Figure 3.4.2-1	72.48/DCR(L) 790-FSAR-3AC	Revised figure to show that the structural lid is flush with the canister shell
Page 3.4.3-1	72.48/DCR(L) 790-FSAR-3Y	Section 3.4.3, 1st paragraph – revised throughout
	72.48/DCR(L) 790-FSAR-3G	Section 3.4.3, 4th paragraph – added new 2nd sentence; reworded following sentence (now #3); added new last sentence
Page 3.4.3-28	72.48/DCR(L) 790-FSAR-3G	Section 3.4.3.2, 1st paragraph, added new last sentence
Page 3.5-1	72.48/DCR(L) 790-FSAR-3F	Section 3.4, 1st paragraph, 1st sentence – changed "Zircaloy" to "zirconium alloy"
Page 3.6-2	72.48/DCR(L) 790-FSAR-3F	1st paragraph, 3rd sentence – changed "solid stainless steel or Zircaloy rods" to "solid stainless steel or zirconium alloy rods" & "hollow Zircaloy rods" to "hollow zirconium alloy tubes"
Chapter 4		
Page 4.1-5, Table 4.1-2	72.48/DCR(L) 790-FSAR-3A	PWR column, 1st line – changed "17" to "20"
Page 4.2-5, Table 4.2-8	72.48/DCR(L) 790-FSAR-3F	Table title – changed "Zircaloy and Zircaloy-4" to "Zirconium Alloy"
Page 4.4.1-2	72.48/DCR(L) 790-FSAR-3I	3rd full paragraph, 2nd sentence – changed "vacuum or helium" to "vacuum, helium or saturated steam"
Page 4.4.1-27	72.48/DCR(L) 790-FSAR-3A	Section 4.4.1.3, 2nd paragraph – added sentences 5 & 6
Page 4.4.1-28	72.48/DCR(L) 790-FSAR-3A	1st full paragraph, 1st & 2nd sentences – revised throughout
Page 4.4.1-30, Figure 4.4.1.3-2	72.48/DCR(L) 790-FSAR-3I	Text box – deleted "(water/helium)"

Chapter/Page/ Figure/Table	Source of Change: 72.48/DCR(L)	Description of Change
Page 4.4.1-35	72.48/DCR(L) 790-FSAR-3I	Section 4.4.1.5, 2nd paragraph, 2nd sentence – changed "Three" to "Four" & "and a vacuum" to "a vacuum and saturated steam"
Page 4.4.1-38	72.48/DCR(L) 790-FSAR-3I	Section 4.4.1.6, 3rd paragraph, 2nd sentence – changed "Three to Four" & "and a vacuum" to "a vacuum and saturated steam"
Page 4.4.1-41, Figure 4.4.1.6-1	72.48/DCR(L) 790-FSAR-3I	Figure – changed "Gap (Media; helium, vacuum, or water)" to "Gap (Media*); revised figure note to include saturated steam
Page 4.4.1-42, Figure 4.4.1.6-2	72.48/DCR(L) 790-FSAR-3I	Figure – added "*" to Media in 2 places; revised figure note to include saturated steam
Page 4.4.1-43, Figure 4.4.1.6-3	72.48/DCR(L) 790-FSAR-3I	Figure – added "*" to Media in 2 places; revised figure note to include saturated steam
Page 4.4.3-1	72.48/DCR(L) 790-FSAR-3A	Section 4.4.3, 4th paragraph, 1st sentence – revised throughout
	72.48/DCR(L) 790-FSAR-3I	Section 4.4.3, 4th paragraph – added last sentence
Page 4.4.3-2	72.48/DCR(L) 790-FSAR-3A	Section 4.4.3.1, 2nd paragraph – deleted last sentence
Page 4.4.3-3	72.48/DCR(L) 790-FSAR-3A	3rd paragraph – revised throughout
Page 4.4.3-4	72.48/DCR(L) 790-FSAR-3A	1st partial paragraph – revised throughout 3rd full paragraph, 1st sentence – revised throughout
Page 4.4.3-17, Table 4.4.3-5	72.48/DCR(L) 790-FSAR-3A	Table revised throughout; 1st footnote deleted; renumbered subsequent footnotes
Page 4.5-2	72.48/DCR(L) 790-FSAR-3F	Item #4 – changed "Zircaloy" to "zirconium alloy"
Page 4.5-3	72.48/DCR(L) 790-FSAR-3F	Section 4.5.1.1.1, 3rd paragraph, 4th sentence – changed "Zircaloy" to "zirconium alloy"
Page 4.5-6	72.48/DCR(L) 790-FSAR-3F	1st paragraph, 2nd sentence – changed "Zircaloy" to "zirconium alloy"; 4th sentence – changed "Zirconium" to "zirconium alloy"; 5th sentence – changed "Zirconium" to "zirconium alloy" & "Zircaloy" to "zirconium alloy" Section 4.5.1.1.4, section title – changed "Zircaloy" to "Zirconium Alloy"; 1st paragraph, 2nd sentence – changed "Zircaloy" to "zirconium alloy"; 2nd paragraph, 1st sentence – changed "Zircaloy" to "zirconium alloy"; 2nd sentence – changed "hollow Zircaloy rods" to "hollow zirconium alloy tubes"
Chapter 5		
Page 5.3-11	72.48/DCR(L) 790-FSAR-3F	Section 5.3.4.1, 2nd paragraph, 3rd sentence – changed "Zircaloy" to "zirconium alloy"
Page 5.3-12	72.48/DCR(L) 790-FSAR-3F	Section 5.3.5.1, table – changed "Zircaloy" to "Zirconium Alloy"
Page 5.3-22, Table 5.3-1	72.48/DCR(L) 790-FSAR-3F	"SCL Name" column – changed "ZIRCALOY" to "ZIRC. ALLOY" in 2 places; "27N-18G Library Nuclide" column – changed "ZIRCALOY" to "ZIRC. ALLOY" in 2 places
Page 5.3-23, Table 5.3-2	72.48/DCR(L) 790-FSAR-3F	"SCL Name" column – changed "ZIRCALOY" to "ZIRC. ALLOY" in 2 places; "27N-18G Library Nuclide" column – changed "ZIRCALOY" to "ZIRC. ALLOY" in 2 places

Chapter/Page/ Figure/Table	Source of Change: 72.48/DCR(L)	Description of Change
Page 5.3-25, Table 5.3-3	72.48/DCR(L) 790-FSAR-3F	"SCL Name" column – changed "ZIRCALOY" to "ZIRC. ALLOY" in 2 places; "27N-18G Library Nuclide" column – changed "ZIRCALOY" to "ZIRC. ALLOY" in 2 places;
Page 5.3-26, Table 5.3-4	72.48/DCR(L) 790-FSAR-3F	"SCL Name" column – changed "ZIRCALOY" to "ZIRC. ALLOY" in 2 places; "27N-18G Library Nuclide" column – changed "ZIRCALOY" to "ZIRC. ALLOY" in 2 places;
Page 5.6.1-1	72.48/DCR(L) 790-FSAR-3F	Section 5.6.1, 2nd paragraph, 1st sentence – changed "hollow zirconium rods" to "hollow zirconium alloy tubes"
Page 5.6.1-3	72.48/DCR(L) 790-FSAR-3F	Section 5.6.1.1.2, 2nd paragraph, 1st sentence – changed "Zircaloy" to "zirconium alloy"
Page 5.6.1-5	72.48/DCR(L) 790-FSAR-3F	Section 5.6.1.3, 2nd paragraph, 4th sentence – changed "hollow Zircaloy rods" to "hollow zirconium alloy tubes"
Chapter 6		
Page 6.2-1	72.48/DCR(L) 790-FSAR-3F	Section 6.2, 3rd paragraph, 2nd sentence – changed "Zircaloy" to "zirconium alloy"
Page 6.3-7	72.48/DCR(L) 790-FSAR-3F	Section 6.3.4, table, Material column – changed "Zircaloy" to "Zirconium alloy"
Page 6.3-8	72.48/DCR(L) 790-FSAR-3F	Section 6.3.4.1, table, Material column – changed "Zircaloy" to "Zirconium Alloy"
Page 6.4-1	72.48/DCR(L) 790-FSAR-3F	Section 6.4.1.1, last paragraph, 1st sentence – changed "Zircaloy" to "zirconium alloy"
Page 6.6.1-4	72.48/DCR(L) 790-FSAR-3F	Section 6.6.1.2.4, 1st paragraph, 1st sentence – changed "Zircaloy" to "zirconium alloy; 2nd sentence – changed "hollow rods" to "hollow tubes"; 4th sentence – changed "hollow rod analysis" to "hollow tube analysis" & "Zircaloy" to "zirconium alloy"
Page 6.6.1-5	72.48/DCR(L) 790-FSAR-3F	1st paragraph, 4th sentence – changed "hollow Zircaloy rods" to "hollow zirconium alloy tubes"
Page 6.6.1-6	72.48/DCR(L) 790-FSAR-3F	Section 6.6.1.2.7, 1st paragraph, 2nd bullet – changed "hollow rods" to "hollow zirconium alloy tubes"
Page 6.6.1-7	72.48/DCR(L) 790-FSAR-3F	1st paragraph, 3rd bullet – changed "Zircaloy" to "zirconium alloy"
Page 6.6.1-15, Table 6.6.1-1	72.48/DCR(L) 790-FSAR-3F	1st note of table – changed "Zircaloy" to "zirconium alloy"
Chapter 7		
Page 7.1-2	72.48/DCR(L) 790-FSAR-3P	1st full paragraph – revised throughout
	72.48/DCR(L) 790-FSAR-3O	4th paragraph – changed section number reference
Page 7.1-3	72.48/DCR(L) 790-FSAR-3P	Section 7.1.1.2, 1st paragraph, 3rd sentence – revised throughout
	72.48/DCR(L) 790-FSAR-3AC	Section 7.1.1.2, 3rd paragraph, last sentence – changed reference from [7] to [6] to coincide with revised list of references
Page 7.1-4	72.48/DCR(L) 790-FSAR-3O	Section 7.1.1.3, 1st paragraph, 2nd & 4th sentences – changed section number reference; 2nd paragraph, last sentence – changed section number references

Chapter/Page/ Figure/Table	Source of Change: 72.48/DCR(L)	Description of Change
Page 7.1-5	72.48/DCR(L) 790-FSAR-3O	Section 7.1.3, 1st paragraph, 2nd sentence – changed section number reference
	72.48/DCR(L) 790-FSAR-3K	Section 7.1.3.2, 1st paragraph – revised throughout
	72.48/DCR(L) 790-FSAR-3AC	Section 7.1.3.2, 2nd paragraph, 1st sentence – added reference [4] to text; omitted in previous revision
Page 7.1-6	72.48/DCR(L) 790-FSAR-3O	Section 7.1.3.3 – original text deleted; reference to Chapter 9 inserted
Page 7.1-8, Figure 7.1-2	72.48/DCR(L) 790-FSAR-3AC	Revised figure to show that the structural lid is flush with the canister shell
Page 7.5-1	72.48/DCR(L) 790-FSAR-3AC	Section 7.5 – changed references 3, 4 & 5 from "1995 Edition with 1997 Addenda" to "1995 Edition with 1995 Addenda"; deleted reference 6 (report was deleted from text by DCR(L) 790-FSAR-3O); renumbered subsequent reference and revised text (see previous change on page 7.1-3)
Chapter 8		
Page 8-1	72.48/DCR(L) 790-FSAR-3G	Section 8.0, 4th paragraph – revised 2nd sentence; added new 3rd & 4th sentences
Page 8-2	72.48/DCR(L) 790-FSAR-3J	2nd paragraph – revised throughout
Page 8.1-1	72.48/DCR(L) 790-FSAR-3Q	Section 8.1, 2nd paragraph – added last sentence
Page 8.1.1-2	72.48/DCR(L) 790-FSAR-3A	Item #12 – added new Note with forced air cooling/in-pool cooling table; revised 2nd Note throughout
	72.48/DCR(L) 790-FSAR-3N	Item #12, 1st Note, 2nd sentence – changed "100°F" to "76°F"
Page 8.1.1-3	72.48/DCR(L) 790-FSAR-3A	Item #12, 2nd Note (cont'd) – revised throughout; 3rd Note – added last sentence
Page 8.1.1-4	72.48/DCR(L) 790-FSAR-3X	Step 21 & Note – revised throughout
Page 8.1.1-6	72.48/DCR(L) 790-FSAR-3V	Deleted Item #59 (requirement for smear surveys) and renumbered subsequent items
Page 8.1.1-8, Table 8.1.1-1	72.48/DCR(L) 790-FSAR-3G	Item 9 – changed from "Canister Sling" to "Redundant Canister Lifting Sling System (1)" & added footnote
Page 8.1.1-10, Table 8.1.1-3	72.48/DCR(L) 790-FSAR-3A	PWR Time Limit (Hours) column – revised throughout
Page 8.1.2-1	72.48/DCR(L) 790-FSAR-3Q	Section 8.1.2, Item #7 – deleted 2nd Note
Page 8.1.2-2	72.48/DCR(L) 790-FSAR-3V	Item #17 – added 2nd Note re canister contamination surveys
Page 8.2-2	72.48/DCR(L) 790-FSAR-3S	Item #4, 1st sentence – corrected wording
	72.48/DCR(L) 790-FSAR-3T	Item #8 – new Note added
Page 8.3-1	72.48/DCR(L) 790-FSAR-3T	Section 8.3, 1st paragraph – deleted two sentences

Chapter/Page/ Figure/Table	Source of Change: 72.48/DCR(L)	Description of Change
Chapter 9		
Page 9.1-1	72.48/DCR(L) 790-FSAR-3Z	Section 9.1.1 – deleted "Inspection" in section title and revised 1st paragraph throughout
Page 9.1-2	72.48/DCR(L) 790-FSAR-3Z	Revised paragraphs 1-5 throughout Section 9.1.1.1 – revised 1st paragraph throughout
Page 9.1-3	72.48/DCR(L) 790-FSAR-3Z	1st partial paragraph & 1st, 2nd & 3rd full paragraphs – revised throughout Original Section 9.1.1.2 was deleted; renumbered following section, Construction Inspections
Page 9.1-5	72.48/DCR(L) 790-FSAR-3W	Section 9.1.2.2, 1st paragraph, 2nd sentence – revised throughout; 3rd sentence – combined 3rd & 4th sentences from Revision 3
Page 9.2-2	72.48/DCR(L) 790-FSAR-3M	Section 9.2.3, 2nd paragraph – added to address report on thermal performance of UMS system at Palo Verde
Page 9.2-3	72.48/DCR(L) 790-FSAR-3M	Section 9.2.3, partial paragraph – added to address report on thermal performance of UMS system at Palo Verde
Page 9.3-1	72.48/DCR(L) 790-FSAR-3M	Section 9.3, References – added #10
	72.48/DCR(L) 790-FSAR-3Z	Section 9.3, References – added #11
Chapter 11		
Page 11.2.15-25	72.48/DCR(L) 790-FSAR-3F	2nd paragraph, 4th sentence – changed "Zircaloy" to "zirconium alloy"
Page 11.2.15-29	72.48/DCR(L) 790-FSAR-3F	Section 11.2.15.1.6, 3rd paragraph, table, last line – changed "Zircaloy" to "Zirconium alloy"; 4th paragraph, last sentence – changed "Zircaloy" to "zirconium alloy"
Page 11.2.15-32	72.48/DCR(L) 790-FSAR-3F	4th paragraph, 1st sentence – changed "Zircaloy–4" to "zirconium alloy"; 5th paragraph, 1st sentence – changed "Zircaloy–4" to "zirconium alloy"
Chapter 12		
Page 12C3-9	72.48/DCR(L) 790-FSAR-3AC	C 3.1.1, BACKGROUND, 1st paragraph, 4th sentence – changed "moved into the cask decontamination area" to "moved to a preparation area" APPLICABLE SAFETY ANALYSIS, 1st paragraph, 2nd sentence – changed throughout
Page 12C3-11	72.48/DCR(L) 790-FSAR-3C	C 3.1.1, ACTIONS, A.2.1.1 – revised throughout
Page 12C3-12	72.48/DCR(L) 790-FSAR-3AC	C 3.1.1, SURVEILLANCE REQUIREMENTS, SR 3.1.1.2, 1st sentence – added "or forced air cooling"
Page 12C3-13	72.48/DCR(L) 790-FSAR-3AC	C 3.1.2, BACKGROUND, 1st paragraph, 4th sentence – changed "moved into the cask decontamination area" to "moved to a preparation area"
Page 12C3-16	72.48/DCR(L) 790-FSAR-3AC	C 3.1.3, BACKGROUND, 1st paragraph, 4th sentence – changed "moved into the cask decontamination area" to "moved to a preparation area"
Page 12C3-19	72.48/DCR(L) 790-FSAR-3AC	C 3.1.4, BACKGROUND, 1st paragraph, 4th sentence – changed "moved into the cask decontamination area" to "moved to a preparation area"

Chapter/Page/ Figure/Table	Source of Change: 72.48/DCR(L)	Description of Change
Page 12C3-20	72.48/DCR(L) 790-FSAR-3AC	C 3.1.4, APPLICABLE SAFETY ANALYSIS, 1st paragraph, 3rd sentence – deleted "with the annulus fill system in operation" C 3.1.4, APPLICABLE SAFETY ANALYSIS, 4th paragraph, 3rd sentence – revised throughout
Page 12C3-22	72.48/DCR(L) 790-FSAR-3AC	C 3.1.4, ACTIONS, 3rd paragraph – deleted "not"
	72.48/DCR(L) 790-FSAR-3C	C 3.1.4, ACTIONS, A.1.1 – revised throughout
Page 12C3-24	72.48/DCR(L) 790-FSAR-3AC	C 3.1.5, BACKGROUND, 1st paragraph, 4th sentence – changed "moved into the cask decontamination area" to "moved to a preparation area"
Page 12C3-30	72.48/DCR(L) 790-FSAR-3V	C 3.2.1, BACKGROUND, 4th sentence – changed "This contamination is removed" to "Contamination exceeding LCO limits is removed" APPLICABLE SAFETY ANALYSIS, 1st sentence – added "significantly"; 2nd sentence – added "to below the LCO limits" LCO, last sentence – changed ", which would" to "that could"
Page 12C3-31	72.48/DCR(L) 790-FSAR-3V	LCO, 1st paragraph, 2nd sentence – changed "direct or indirect methods" to "direct and/or indirect methods"; deleted 4th & 5th sentences from Revision 3; last sentence – changed "entire upper circumference of the CANISTER and the structural lid" to "entire CANISTER surface area" LCO, 2nd paragraph – revised throughout APPLICABILITY, 3rd sentence – deleted "and TRANSFER CASK"

Attachment 3

CERTIFICATION OF ACCURACY

OF THE

NAC-UMS® UNIVERSAL STORAGE SYSTEM FINAL SAFETY ANALYSIS REPORT,

REVISION 4

NAC International

November 2004

NAC INTERNATIONAL

CERTIFICATION OF ACCURACY
PURSUANT TO 10 CFR 72. 248(c)(4)(i)

Thomas A. Danner (Affiant), Vice President, Engineering, of NAC International, hereinafter referred to as NAC, at 3930 East Jones Bridge Road, Norcross, Georgia 30092, being duly sworn, deposes and certifies that:

1. Affiant has reviewed the information described in Item 2, is personally familiar with the preparation, checking and verification of that information and is authorized to certify its accuracy.

2. The information being certified as accurate includes all of the changes incorporated into the NAC-UMS® Universal Storage System Final Safety Analysis Report, Revision 4.

STATE OF GEORGIA, COUNTY OF GWINNETT

Mr. Thomas A. Danner, being duly sworn, deposes and says:

That he has read the foregoing affidavit and the matters stated therein are true and correct to the best of his knowledge, information and belief.

Executed at Norcross, Georgia, this 19th day of November 2004.

Thomas A. Danner
Vice President, Engineering
NAC International

Subscribed and sworn before me this 19th day of November, 2004.

Notary Public

November 2004

Revision 4

NAC-UMS

Universal MPC System

FINAL SAFETY ANALYSIS REPORT

for the UMS Universal Storage System

Docket No. 72-1015

NAC INTERNATIONAL

Atlanta Corporate Headquarters: 3930 East Jones Bridge Road, Norcross, Georgia 30092 USA
Phone 770-447-1144, Fax 770-447-1797, www.nacintl.com

List of Effective Pages

List of Effective Pages

Chapter 1

1-i ..... Revision 3
1-ii ..... Revision 3
1-1 ..... Revision 0
1-2 ..... Revision 3
1-3 ..... Revision 3
1-4 ..... Revision 3
1-5 ..... Amendment 2
1-6 ..... Revision 3
1-7 ..... Revision 3
1-8 ..... Revision 3
1.1-1 ..... Revision 3
1.1-2 ..... Revision 4
1.1-3 ..... Revision 3
1.1-4 ..... Revision 0
1.2-1 ..... Revision 3
1.2-2 ..... Revision 3
1.2-3 ..... Revision 3
1.2-4 ..... Revision 3
1.2-5 ..... Revision 3
1.2-6 ..... Revision 3
1.2-7 ..... Revision 4
1.2-8 ..... Revision 3
1.2-9 ..... Revision 3
1.2-10 ..... Revision 4
1.2-11 ..... Revision 4
1.2-12 ..... Revision 4
1.2-13 ..... Revision 4
1.2-14 ..... Revision 0
1.2-15 ..... Revision 3
1.2-16 ..... Amendment 0
1.2-17 ..... Amendment 0
1.2-18 ..... Amendment 0
1.2-19 ..... Amendment 0
1.2-20 ..... Revision 3
1.2-21 ..... Revision 3
1.2-22 ..... Revision 3
1.2-23 ..... Revision 3
1.2-24 ..... Revision 3
1.2-25 ..... Revision 3
1.2-26 ..... Revision 3
1.2-27 ..... Revision 4
1.2-28 ..... Revision 3
1.3-1 ..... Revision 4
1.3-2 ..... Revision 4
1.3-3 ..... Revision 4
1.4-1 ..... Revision 0
1.4-2 ..... Revision 0
1.5-1 ..... Revision 0
1.5-2 ..... Revision 0
1.5-3 ..... Revision 0
1.5-4 ..... Revision 0
1.5-5 ..... Revision 3
1.5-6 ..... Revision 0
1.5-7 ..... Revision 0
1.5-8 ..... Revision 3
1.5-9 ..... Revision 3
1.5-10 ..... Revision 0
1.5-11 ..... Revision 3
1.5-12 ..... Revision 0
1.5-13 ..... Revision 0
1.5-14 ..... Revision 0
1.5-15 ..... Revision 0
1.5-16 ..... Revision 0
1.5-17 ..... Revision 3
1.5-18 ..... Revision 0
1.5-19 ..... Revision 0
1.5-20 ..... Revision 0

List of Effective Pages (continued)

1.5-21 ..... Revision 3
1.5-22 ..... Revision 4
1.5-23 ..... Revision 0
1.5-24 ..... Revision 0
1.5-25 ..... Revision 0
1.5-26 ..... Revision 0
1.5-27 ..... Revision 3
1.5-28 ..... Revision 0
1.5-29 ..... Revision 0
1.5-30 ..... Revision 0
1.5-31 ..... Revision 0
1.5-32 ..... Revision 0
1.5-33 ..... Revision 3
1.5-34 ..... Revision 3
1.5-35 ..... Revision 0
1.5-36 ..... Revision 3
1.5-37 ..... Amendment 2
1.5-38 ..... Revision 3
1.5-39 ..... Revision 0
1.5-40 ..... Revision 0
1.5-41 ..... Revision 0
1.5-42 ..... Revision 0
1.5-43 ..... Revision 0
1.5-44 ..... Revision 3
1.5-45 ..... Revision 0
1.5-46 ..... Revision 0
1.5-47 ..... Revision 3
1.5-48 ..... Revision 3
1.5-49 ..... Revision 0
1.5-50 ..... Revision 0
1.5-51 ..... Revision 0
1.5-52 ..... Revision 0
1.5-53 ..... Revision 0
1.5-54 ..... Revision 0
1.6-1 ..... Revision 3
1.6-2 ..... Revision 3
1.7-1 ..... Revision 3
1.7-2 ..... Revision 4
1.7-3 ..... Revision 4
1.8-1 ..... Revision 4
1.8-2 ..... Revision 4

31 drawings (see Section 1.8)

Chapter 2

2-i ..... Revision 3
2-ii ..... Revision 3
2-iii ..... Revision 3
2-iv ..... Revision 3
2-1 ..... Revision 0
2-2 ..... Revision 3
2-3 ..... Revision 3
2.1-1 ..... Revision 4
2.1.1-1 ..... Revision 3
2.1.1-2 ..... Revision 4
2.1.1-3 ..... Revision 3
2.1.2-1 ..... Revision 3
2.1.2-2 ..... Revision 4
2.1.2-3 ..... Revision 3
2.1.3-1 ..... Revision 3
2.1.3-2 ..... Revision 3
2.1.3-3 ..... Revision 4
2.1.3-4 ..... Revision 3
2.1.3-5 ..... Revision 3
2.1.3-6 ..... Revision 3
2.1.3-7 ..... Revision 3
2.1.3-8 ..... Revision 3
2.1.3-9 ..... Revision 4
2.1.3-10 ..... Revision 3
2.1.3-11 ..... Revision 3

List of Effective Pages (continued)

2.1.3-12 ..... Revision 3
2.1.3-13 ..... Revision 3
2.1.3-14 ..... Revision 3
2.2-1 ..... Amendment 1
2.2-2 ..... Revision 0
2.2-3 ..... Revision 0
2.2-4 ..... Revision 3
2.2-5 ..... Revision 3
2.2-6 ..... Revision 0
2.2-7 ..... Revision 0
2.2-8 ..... Revision 0
2.2-9 ..... Revision 0
2.2-10 ..... Revision 0
2.2-11 ..... Revision 3
2.3-1 ..... Amendment 2
2.3-2 ..... Amendment 2
2.3-3 ..... Revision 3
2.3-4 ..... Revision 3
2.3-5 ..... Revision 3
2.3-6 ..... Revision 3
2.3-7 ..... Revision 0
2.3-8 ..... Revision 3
2.3-9 ..... Revision 3
2.3-10 ..... Revision 0
2.3-11 ..... Revision 3
2.3-12 ..... Revision 3
2.3-13 ..... Revision 3
2.3-14 ..... Revision 3
2.3-15 ..... Revision 3
2.3-16 ..... Revision 3
2.3-17 ..... Revision 3
2.3-18 ..... Revision 3
2.3-19 ..... Revision 3
2.3-20 ..... Revision 3
2.4-1 ..... Revision 3
2.4-2 ..... Revision 0
2.4-3 ..... Revision 0
2.4-4 ..... Revision 0
2.5-1 ..... Revision 3
2.5-2 ..... Revision 3

Chapter 3

3-i ..... Revision 3
3-ii ..... Revision 3
3-iii ..... Revision 3
3-iv ..... Revision 3
3-v ..... Revision 3
3-vi ..... Revision 3
3-vii ..... Revision 3
3-viii ..... Revision 3
3.1-1 ..... Revision 3
3.1-2 ..... Revision 3
3.1-3 ..... Revision 3
3.1-4 ..... Revision 3
3.1-5 ..... Revision 3
3.1-6 ..... Revision 3
3.1-7 ..... Revision 3
3.2-1 ..... Revision 0
3.2-2 ..... Revision 3
3.2-3 ..... Revision 3
3.2-4 ..... Revision 3
3.3-1 ..... Revision 3
3.3-2 ..... Revision 3
3.3-3 ..... Revision 3
3.3-4 ..... Revision 3
3.3-5 ..... Revision 3
3.3-6 ..... Revision 3
3.3-7 ..... Revision 3
3.3-8 ..... Revision 3
3.3-9 ..... Revision 3

List of Effective Pages (continued)

3.3-10 ..... Revision 3
3.3-11 ..... Revision 3
3.3-12 ..... Revision 3
3.3-13 ..... Revision 3
3.3-14 ..... Revision 3
3.3-15 ..... Revision 3
3.3-16 ..... Revision 3
3.4.1-1 ..... Amendment 2
3.4.1-2 ..... Revision 4
3.4.1-3 ..... Amendment 2
3.4.1-4 ..... Amendment 2
3.4.1-5 ..... Revision 3
3.4.1-6 ..... Revision 4
3.4.1-7 ..... Revision 4
3.4.1-8 ..... Revision 4
3.4.1-9 ..... Revision 3
3.4.1-10 ..... Revision 3
3.4.1-11 ..... Revision 3
3.4.1-12 ..... Revision 3
3.4.2-1 ..... Revision 0
3.4.2-2 ..... Revision 4
3.4.3-1 ..... Revision 4
3.4.3-2 ..... Revision 3
3.4.3-3 ..... Revision 3
3.4.3-4 ..... Revision 0
3.4.3-5 ..... Revision 3
3.4.3-6 ..... Revision 3
3.4.3-7 ..... Revision 3
3.4.3-8 ..... Revision 3
3.4.3-9 ..... Revision 3
3.4.3-10 ..... Revision 3
3.4.3-11 ..... Revision 3
3.4.3-12 ..... Revision 3
3.4.3-13 ..... Revision 3
3.4.3-14 ..... Revision 3
3.4.3-15 ..... Revision 3
3.4.3-16 ..... Revision 3
3.4.3-17 ..... Revision 3
3.4.3-18 ..... Revision 3
3.4.3-19 ..... Revision 3
3.4.3-20 ..... Revision 3
3.4.3-21 ..... Revision 3
3.4.3-22 ..... Revision 3
3.4.3-23 ..... Revision 3
3.4.3-24 ..... Revision 3
3.4.3-25 ..... Revision 3
3.4.3-26 ..... Revision 3
3.4.3-27 ..... Revision 3
3.4.3-28 ..... Revision 4
3.4.3-29 ..... Revision 3
3.4.3-30 ..... Revision 3
3.4.3-31 ..... Revision 3
3.4.3-32 ..... Revision 3
3.4.3-33 ..... Revision 3
3.4.3-34 ..... Revision 3
3.4.3-35 ..... Revision 3
3.4.3-36 ..... Revision 3
3.4.3-37 ..... Revision 3
3.4.3-38 ..... Revision 3
3.4.3-39 ..... Revision 3
3.4.3-40 ..... Revision 3
3.4.3-41 ..... Revision 3
3.4.3-42 ..... Revision 3
3.4.3-43 ..... Revision 3
3.4.3-44 ..... Revision 3
3.4.3-45 ..... Revision 3
3.4.3-46 ..... Revision 3
3.4.3-47 ..... Revision 3
3.4.3-48 ..... Revision 3
3.4.3-49 ..... Revision 3

List of Effective Pages (continued)

3.4.3-50 ..... Revision 3
3.4.3-51 ..... Revision 3
3.4.3-52 ..... Revision 3
3.4.3-53 ..... Revision 3
3.4.3-54 ..... Revision 3
3.4.3-55 ..... Revision 3
3.4.3-56 ..... Revision 3
3.4.3-57 ..... Revision 3
3.4.3-58 ..... Revision 3
3.4.3-59 ..... Revision 3
3.4.3-60 ..... Revision 3
3.4.3-61 ..... Revision 3
3.4.3-62 ..... Revision 3
3.4.3-63 ..... Revision 3
3.4.3-64 ..... Revision 3
3.4.3-65 ..... Revision 3
3.4.3-66 ..... Revision 3
3.4.3-67 ..... Revision 3
3.4.3-68 ..... Revision 3
3.4.3-69 ..... Revision 3
3.4.3-70 ..... Revision 3
3.4.3-71 ..... Revision 3
3.4.3-72 ..... Revision 3
3.4.3-73 ..... Revision 3
3.4.3-74 ..... Revision 3
3.4.3-75 ..... Revision 3
3.4.3-76 ..... Revision 3
3.4.3-77 ..... Revision 3
3.4.3-78 ..... Revision 3
3.4.3-79 ..... Revision 3
3.4.3-80 ..... Revision 3
3.4.3-81 ..... Revision 3
3.4.3-82 ..... Revision 3
3.4.3-83 ..... Revision 3
3.4.3-84 ..... Revision 3
3.4.3-85 ..... Revision 3
3.4.3-86 ..... Revision 3
3.4.3-87 ..... Revision 3
3.4.3-88 ..... Revision 3
3.4.3-89 ..... Revision 3
3.4.3-90 ..... Revision 3
3.4.3-91 ..... Revision 3
3.4.3-92 ..... Revision 3
3.4.3-93 ..... Revision 3
3.4.3-94 ..... Revision 3
3.4.3-95 ..... Revision 3
3.4.3-96 ..... Revision 3
3.4.3-97 ..... Revision 3
3.4.3-98 ..... Revision 3
3.4.4-1 ..... Revision 0
3.4.4-2 ..... Revision 3
3.4.4-3 ..... Revision 3
3.4.4-4 ..... Revision 3
3.4.4-5 ..... Revision 3
3.4.4-6 ..... Revision 3
3.4.4-7 ..... Revision 3
3.4.4-8 ..... Revision 0
3.4.4-9 ..... Revision 3
3.4.4-10 ..... Revision 0
3.4.4-11 ..... Revision 3
3.4.4-12 ..... Revision 3
3.4.4-13 ..... Revision 3
3.4.4-14 ..... Revision 3
3.4.4-15 ..... Revision 3
3.4.4-16 ..... Revision 3
3.4.4-17 ..... Revision 3
3.4.4-18 ..... Revision 3
3.4.4-19 ..... Revision 3
3.4.4-20 ..... Revision 3
3.4.4-21 ..... Revision 0

List of Effective Pages (continued)

3.4.4-22 ..... Revision 0
3.4.4-23 ..... Revision 0
3.4.4-24 ..... Revision 0
3.4.4-25 ..... Revision 0
3.4.4-26 ..... Revision 0
3.4.4-27 ..... Revision 0
3.4.4-28 ..... Revision 0
3.4.4-29 ..... Revision 0
3.4.4-30 ..... Revision 0
3.4.4-31 ..... Revision 0
3.4.4-32 ..... Revision 0
3.4.4-33 ..... Revision 0
3.4.4-34 ..... Revision 0
3.4.4-35 ..... Revision 0
3.4.4-36 ..... Revision 0
3.4.4-37 ..... Revision 0
3.4.4-38 ..... Revision 0
3.4.4-39 ..... Revision 3
3.4.4-40 ..... Revision 3
3.4.4-41 ..... Revision 3
3.4.4-42 ..... Revision 3
3.4.4-43 ..... Revision 3
3.4.4-44 ..... Revision 3
3.4.4-45 ..... Revision 3
3.4.4-46 ..... Revision 3
3.4.4-47 ..... Revision 3
3.4.4-48 ..... Revision 3
3.4.4-49 ..... Revision 0
3.4.4-50 ..... Revision 0
3.4.4-51 ..... Revision 0
3.4.4-52 ..... Revision 3
3.4.4-53 ..... Revision 3
3.4.4-54 ..... Revision 3
3.4.4-55 ..... Revision 3
3.4.4-56 ..... Revision 3
3.4.4-57 ..... Revision 3
3.4.4-58 ..... Revision 3
3.4.4-59 ..... Revision 3
3.4.4-60 ..... Revision 3
3.4.4-61 ..... Revision 3
3.4.4-62 ..... Revision 3
3.4.4-63 ..... Revision 3
3.4.4-64 ..... Revision 3
3.4.4-65 ..... Revision 0
3.4.4-66 ..... Revision 3
3.4.4-67 ..... Revision 3
3.4.4-68 ..... Revision 3
3.4.4-69 ..... Revision 3
3.4.4-70 ..... Revision 0
3.4.4-71 ..... Revision 0
3.4.4-72 ..... Revision 0
3.4.4-73 ..... Revision 0
3.4.4-74 ..... Revision 0
3.4.4-75 ..... Revision 3
3.4.4-76 ..... Revision 3
3.4.4-77 ..... Revision 3
3.4.5-1 ..... Revision 3
3.5-1 ..... Revision 4
3.6-1 ..... Revision 3
3.6-2 ..... Revision 4
3.6-3 ..... Revision 3
3.6-4 ..... Revision 3
3.6-5 ..... Revision 3
3.6-6 .....Amendment 1
3.6-7 ..... Revision 3
3.6-8 ..... Revision 3
3.7-1 ..... Revision 3
3.7-2 ..... Revision 3
3.7-3 ..... Revision 3
3.8-1 ..... Revision 3

List of Effective Pages (continued)

3.8-2 ..... Revision 0
3.8-3 ..... Revision 0
3.8-4 ..... Revision 0
3.8-5 ..... Revision 0
3.8-6 ..... Revision 0
3.8-7 ..... Revision 0
3.8-8 ..... Revision 0
3.8-9 ..... Revision 0
3.8-10 ..... Revision 0
3.8-11 ..... Revision 0
3.8-12 ..... Revision 3
3.8-13 ..... Revision 3
3.8-14 ..... Revision 3
3.8-15 ..... Revision 3

Chapter 4

4-i ..... Revision 3
4-ii ..... Revision 3
4-iii ..... Revision 3
4-iv ..... Revision 3
4-v ..... Revision 4
4-vi ..... Revision 3
4.1-1 ..... Revision 3
4.1-2 ..... Revision 3
4.1-3 ..... Revision 3
4.1-4 ..... Revision 0
4.1-5 ..... Revision 4
4.1-6 ..... Revision 3
4.1-7 ..... Revision 3
4.1-8 ..... Revision 3
4.2-1 ..... Revision 3
4.2-2 ..... Revision 3
4.2-3 ..... Revision 3
4.2-4 ..... Revision 0
4.2-5 ..... Revision 4
4.2-6 ..... Revision 0
4.2-7 ..... Revision 3
4.3-1 ..... Revision 3
4.3-2 ..... Revision 3
4.3-3 ..... Revision 3
4.4-1 ..... Revision 3
4.4.1-1 ..... Revision 3
4.4.1-2 ..... Revision 4
4.4.1-3 ..... Revision 3
4.4.1-4 ..... Revision 0
4.4.1-5 ..... Revision 0
4.4.1-6 ..... Revision 0
4.4.1-7 ..... Revision 0
4.4.1-8 ..... Amendment 2
4.4.1-9 ..... Revision 3
4.4.1-10 ..... Revision 3
4.4.1-11 ..... Revision 3
4.4.1-12 ..... Revision 3
4.4.1-13 ..... Revision 3
4.4.1-14 ..... Revision 3
4.4.1-15 ..... Revision 3
4.4.1-16 ..... Revision 3
4.4.1-17 ..... Revision 3
4.4.1-18 ..... Revision 3
4.4.1-19 ..... Revision 3
4.4.1-20 ..... Revision 3
4.4.1-21 ..... Revision 3
4.4.1-22 ..... Revision 3
4.4.1-23 ..... Revision 3
4.4.1-24 ..... Revision 3
4.4.1-25 ..... Revision 3
4.4.1-26 ..... Revision 3
4.4.1-27 ..... Revision 4
4.4.1-28 ..... Revision 4
4.4.1-29 ..... Revision 3

List of Effective Pages (continued)

4.4.1-30 ..... Revision 4
4.4.1-31 ..... Revision 3
4.4.1-32 ..... Revision 3
4.4.1-33 ..... Revision 3
4.4.1-34 ..... Revision 3
4.4.1-35 ..... Revision 4
4.4.1-36 ..... Revision 3
4.4.1-37 ..... Revision 3
4.4.1-38 ..... Revision 4
4.4.1-39 ..... Revision 3
4.4.1-40 ..... Revision 3
4.4.1-41 ..... Revision 4
4.4.1-42 ..... Revision 4
4.4.1-43 ..... Revision 4
4.4.1-44 ..... Revision 3
4.4.1-45 ..... Revision 3
4.4.1-46 ..... Revision 3
4.4.1-47 ..... Revision 3
4.4.1-48 ..... Revision 3
4.4.1-49 ..... Revision 3
4.4.2-1 ..... Revision 0
4.4.3-1 ..... Revision 4
4.4.3-2 ..... Revision 4
4.4.3-3 ..... Revision 4
4.4.3-4 ..... Revision 4
4.4.3-5 ..... Revision 3
4.4.3-6 ..... Revision 3
4.4.3-7 ..... Revision 3
4.4.3-8 ..... Revision 3
4.4.3-9 ..... Revision 3
4.4.3-10 ..... Revision 3
4.4.3-11 ..... Revision 3
4.4.3-12 ..... Revision 3
4.4.3-13 ..... Revision 3
4.4.3-14 ..... Revision 3
4.4.3-15 ..... Revision 3
4.4.3-16 ..... Revision 3
4.4.3-17 ..... Revision 4
4.4.3-18 ..... Revision 3
4.4.3-19 ..... Revision 3
4.4.3-20 ..... Revision 3
4.4.3-21 ..... Revision 3
4.4.3-22 ..... Revision 3
4.4.4-1 ..... Revision 0
4.4.5-1 ..... Revision 3
4.4.5-2 ..... Revision 3
4.4.5-3 ..... Revision 3
4.4.5-4 ..... Revision 3
4.4.5-5 ..... Revision 3
4.4.6-1 ..... Revision 0
4.4.7-1 ..... Revision 3
4.5-1 ..... Revision 3
4.5-2 ..... Revision 4
4.5-3 ..... Revision 4
4.5-4 ..... Amendment 2
4.5-5 ..... Revision 3
4.5-6 ..... Revision 4
4.5-7 ..... Revision 3
4.5-8 ..... Revision 3
4.5-9 ..... Revision 3
4.5-10 ..... Revision 3
4.5-11 ..... Amendment 2
4.5-12 ..... Amendment 2
4.5-13 ..... Amendment 2
4.5-14 ..... Amendment 2
4.5-15 ..... Amendment 2
4.5-16 ..... Amendment 2
4.5-17 ..... Revision 3
4.5-18 ..... Revision 3
4.5-19 ..... Revision 3

List of Effective Pages (continued)

4.6-1 ..... Revision 3
4.6-2 ..... Revision 3
4.6-3 ..... Revision 0
4.6-4 ..... Revision 3

Chapter 5

5-i ..... Revision 3
5-ii ..... Revision 3
5-iii ..... Revision 3
5-iv ..... Revision 3
5-v ..... Revision 3
5-vi ..... Revision 3
5-vii ..... Revision 3
5-viii ..... Revision 3
5-ix ..... Revision 3
5.1-1 ..... Revision 3
5.1-2 ..... Revision 3
5.1-3 ..... Revision 3
5.1-4 ..... Revision 3
5.1-5 ..... Revision 3
5.1-6 ..... Revision 3
5.1-7 ..... Revision 3
5.1-8 ..... Revision 3
5.1-9 ..... Revision 3
5.1-10 ..... Revision 3
5.1-11 ..... Revision 3
5.2-1 ..... Revision 3
5.2-2 ..... Revision 3
5.2-3 ..... Revision 3
5.2-4 ..... Revision 3
5.2-5 ..... Revision 3
5.2-6 ..... Revision 3
5.2-7 ..... Revision 3
5.2-8 ..... Revision 3
5.2-9 ..... Revision 0
5.2-10 ..... Revision 0
5.2-11 ..... Revision 3
5.2-12 ..... Revision 0
5.2-13 ..... Revision 3
5.2-14 ..... Revision 3
5.2-15 ..... Revision 3
5.2-16 ..... Revision 3
5.2-17 ..... Revision 3
5.2-18 ..... Revision 3
5.2-19 ..... Revision 3
5.2-20 ..... Revision 3
5.2-21 ..... Revision 3
5.2-22 ..... Revision 3
5.2-23 ..... Revision 0
5.2-24 ..... Revision 0
5.2-25 ..... Revision 0
5.2-26 ..... Revision 0
5.2-27 ..... Revision 0
5.2-28 ..... Revision 3
5.2-29 ..... Revision 3
5.2-30 ..... Revision 0
5.2-31 ..... Revision 0
5.2-32 ..... Revision 3
5.2-33 ..... Revision 3
5.2-34 ..... Revision 3
5.2-35 ..... Revision 3
5.3-1 ..... Revision 3
5.3-2 ..... Revision 3
5.3-3 ..... Revision 3
5.3-4 ..... Revision 3
5.3-5 ..... Revision 3
5.3-6 ..... Revision 3
5.3-7 ..... Revision 3
5.3-8 ..... Revision 3
5.3-9 ..... Revision 3

List of Effective Pages (continued)

5.3-10 ..... Revision 3
5.3-11 ..... Revision 4
5.3-12 ..... Revision 4
5.3-13 ..... Revision 3
5.3-14 ..... Revision 3
5.3-15 ..... Revision 3
5.3-16 ..... Revision 3
5.3-17 ..... Revision 3
5.3-18 ..... Revision 3
5.3-19 ..... Revision 3
5.3-20 ..... Revision 3
5.3-21 ..... Revision 3
5.3-22 ..... Revision 4
5.3-23 ..... Revision 4
5.3-24 ..... Revision 3
5.3-25 ..... Revision 4
5.3-26 ..... Revision 4
5.3-27 ..... Revision 3
5.3-28 ..... Revision 3
5.3-29 ..... Revision 3
5.3-30 ..... Revision 3
5.3-31 ..... Revision 3
5.3-32 ..... Revision 3
5.4-1 ..... Revision 3
5.4-2 ..... Revision 3
5.4-3 ..... Revision 3
5.4-4 ..... Revision 3
5.4-5 ..... Revision 3
5.4-6 ..... Revision 3
5.4-7 ..... Revision 3
5.4-8 ..... Revision 3
5.4-9 ..... Revision 3
5.4-10 ..... Revision 3
5.4-11 ..... Revision 3
5.4-12 ..... Revision 3
5.4-13 ..... Revision 3
5.4-14 ..... Revision 3
5.4-15 ..... Revision 3
5.4-16 ..... Revision 3
5.4-17 ..... Revision 3
5.4-18 ..... Revision 3
5.4-19 ..... Revision 3
5.4-20 ..... Revision 3
5.4-21 ..... Revision 3
5.4-22 ..... Revision 3
5.4-23 ..... Revision 3
5.4-24 ..... Revision 3
5.4-25 ..... Revision 3
5.4-26 ..... Revision 3
5.4-27 ..... Revision 3
5.5-1 ..... Revision 3
5.5-2 ..... Revision 3
5.5-3 ..... Revision 3
5.5-4 ..... Revision 3
5.5-5 ..... Revision 3
5.5-6 ..... Revision 3
5.5-7 ..... Revision 3
5.5-8 ..... Revision 3
5.5-9 ..... Revision 3
5.6-1 ..... Amendment 1
5.6.1-1 ..... Revision 4
5.6.1-2 ..... Amendment 1
5.6.1-3 ..... Revision 4
5.6.1-4 ..... Amendment 1
5.6.1-5 ..... Revision 4
5.6.1-6 ..... Revision 3
5.6.1-7 ..... Revision 3
5.6.1-8 ..... Revision 3
5.6.1-9 ..... Amendment 1
5.6.1-10 ..... Amendment 1

List of Effective Pages (continued)

5.6.1-11 ..... Revision 3
5.6.1-12 ..... Revision 3
5.6.1-13 ..... Amendment 2
5.6.1-14 ..... Amendment 2
5.6.1-15 ..... Amendment 2
5.6.1-16 ..... Amendment 2
5.6.1-17 ..... Amendment 2
5.6.1-18 ..... Amendment 2
5.6.1-19 ..... Amendment 2
5.6.1-20 ..... Amendment 2
5.6.1-21 ..... Amendment 2
5.6.1-22 ..... Amendment 2
5.6.1-23 ..... Revision 3
5.6.1-24 ..... Revision 3
5.6.1-25 ..... Amendment 2
5.6.1-26 ..... Revision 3
5.6.1-27 ..... Revision 3
5.6.1-28 ..... Amendment 2
5.6.1-29 ..... Amendment 2
5.6.1-30 ..... Amendment 2
5.6.1-31 ..... Amendment 2
5.6.1-32 ..... Amendment 2
5.6.1-33 ..... Amendment 2
5.6.1-34 ..... Amendment 2
5.7-1 ..... Revision 0
5.7-2 ..... Revision 0
5.7-3 ..... Revision 3

Chapter 6

6-i ..... Revision 3
6-ii ..... Revision 3
6-iii ..... Revision 3
6-iv ..... Revision 3
6-v ..... Revision 3
6-vi ..... Revision 3
6-vii ..... Revision 3
6.1-1 ..... Revision 3
6.1-2 ..... Revision 3
6.1-3 ..... Revision 3
6.1-4 ..... Revision 3
6.1-5 ..... Revision 3
6.1-6 ..... Revision 3
6.2-1 ..... Revision 4
6.2-2 ..... Revision 3
6.2-3 ..... Revision 3
6.3-1 ..... Revision 3
6.3-2 ..... Revision 3
6.3-3 ..... Revision 3
6.3-4 ..... Revision 3
6.3-5 ..... Revision 3
6.3-6 ..... Revision 3
6.3-7 ..... Revision 4
6.3-8 ..... Revision 4
6.3-9 ..... Revision 3
6.3-10 ..... Revision 3
6.3-11 ..... Revision 3
6.3-12 ..... Revision 3
6.3-13 ..... Revision 3
6.3-14 ..... Revision 3
6.3-15 ..... Revision 3
6.3-16 ..... Revision 3
6.3-17 ..... Revision 3
6.3-18 ..... Revision 3
6.4-1 ..... Revision 4
6.4-2 ..... Revision 3
6.4-3 ..... Revision 3
6.4-4 ..... Revision 3
6.4-5 ..... Revision 3
6.4-6 ..... Revision 3
6.4-7 ..... Revision 3

List of Effective Pages (continued)

6.4-8 ..... Revision 3
6.4-9 ..... Revision 3
6.4-10 ..... Revision 3
6.4-11 ..... Revision 3
6.4-12 ..... Revision 3
6.4-13 ..... Revision 3
6.4-14 ..... Revision 3
6.4-15 ..... Revision 3
6.4-16 ..... Revision 3
6.4-17 ..... Revision 0
6.4-18 ..... Revision 3
6.4-19 ..... Revision 3
6.4-20 ..... Revision 3
6.4-21 ..... Revision 3
6.4-22 ..... Revision 3
6.4-23 ..... Revision 3
6.4-24 ..... Revision 3
6.4-25 ..... Revision 3
6.4-26 ..... Revision 3
6.4-27 ..... Revision 3
6.4-28 ..... Revision 3
6.4-29 ..... Revision 3
6.4-30 ..... Revision 3
6.4-31 ..... Revision 3
6.4-32 ..... Revision 3
6.4-33 ..... Revision 3
6.4-34 ..... Revision 3
6.4-35 ..... Revision 3
6.4-36 ..... Revision 3
6.4-37 ..... Revision 3
6.4-38 ..... Revision 3
6.4-39 ..... Revision 3
6.4-40 ..... Revision 3
6.5-1 ..... Revision 3
6.5-2 ..... Revision 3
6.5-3 ..... Revision 3
6.5-4 ..... Revision 3
6.5-5 ..... Revision 3
6.5-6 ..... Revision 3
6.5-7 ..... Revision 3
6.5-8 ..... Revision 3
6.5-9 ..... Revision 3
6.5-10 ..... Revision 3
6.5-11 ..... Revision 3
6.5-12 ..... Revision 3
6.5-13 ..... Revision 3
6.5-14 ..... Revision 3
6.5-15 ..... Revision 3
6.5-16 ..... Revision 3
6.5-17 ..... Revision 3
6.5-18 ..... Revision 3
6.5-19 ..... Revision 3
6.5-20 ..... Revision 3
6.5-21 ..... Revision 3
6.5-22 ..... Revision 3
6.5-23 ..... Revision 3
6.5-24 ..... Revision 3
6.5-25 ..... Revision 3
6.5-26 ..... Revision 3
6.5-27 ..... Revision 3
6.5-28 ..... Revision 3
6.5-29 ..... Revision 3
6.5-30 ..... Revision 3
6.5-31 ..... Revision 3
6.5-32 ..... Revision 3
6.5-33 ..... Revision 3
6.5-34 ..... Revision 3
6.5-35 ..... Revision 3
6.5-36 ..... Revision 3
6.5-37 ..... Revision 3

List of Effective Pages (continued)

6.5-38 ..... Revision 3
6.5-39 ..... Revision 3
6.5-40 ..... Revision 3
6.5-41 ..... Revision 3
6.5-42 ..... Revision 3
6.5-43 ..... Revision 3
6.5-44 ..... Revision 3
6.5-45 ..... Revision 3
6.5-46 ..... Revision 3
6.5-47 ..... Revision 3
6.5-48 ..... Revision 3
6.5-49 ..... Revision 3
6.6-1 ..... Amendment 2
6.6.1-1 ..... Amendment 2
6.6.1-2 ..... Amendment 2
6.6.1-3 ..... Amendment 2
6.6.1-4 ..... Revision 4
6.6.1-5 ..... Revision 4
6.6.1-6 ..... Revision 4
6.6.1-7 ..... Revision 4
6.6.1-8 ..... Revision 3
6.6.1-9 ..... Amendment 2
6.6.1-10 ..... Amendment 2
6.6.1-11 ..... Revision 3
6.6.1-12 ..... Amendment 2
6.6.1-13 ..... Amendment 2
6.6.1-14 ..... Amendment 2
6.6.1-15 ..... Revision 4
6.6.1-16 ..... Amendment 2
6.6.1-17 ..... Amendment 2
6.6.1-18 ..... Amendment 2
6.6.1-19 ..... Amendment 2
6.6.1-20 ..... Amendment 2
6.6.1-21 ..... Amendment 2
6.6.1-22 ..... Revision 3
6.6.1-23 ..... Amendment 2
6.6.1-24 ..... Amendment 2
6.7-1 ..... Revision 0
6.7-2 ..... Revision 3
6.8-1 ..... Revision 3
6.8-2 ..... Revision 0
6.8-3 ..... Revision 0
6.8-4 ..... Revision 0
6.8-5 ..... Revision 0
6.8-6 ..... Revision 0
6.8-7 ..... Revision 0
6.8-8 ..... Revision 0
6.8-9 ..... Revision 0
6.8-10 ..... Revision 0
6.8-11 ..... Revision 0
6.8-12 ..... Revision 0
6.8-13 ..... Revision 0
6.8-14 ..... Revision 0
6.8-15 ..... Revision 0
6.8-16 ..... Revision 0
6.8-17 ..... Revision 0
6.8-18 ..... Revision 0
6.8-19 ..... Revision 0
6.8-20 ..... Revision 0
6.8-21 ..... Revision 0
6.8-22 ..... Revision 0
6.8-23 ..... Revision 0
6.8-24 ..... Revision 0
6.8-25 ..... Revision 0
6.8-26 ..... Revision 0
6.8-27 ..... Revision 0
6.8-28 ..... Revision 0
6.8-29 ..... Revision 0
6.8-30 ..... Revision 0
6.8-31 ..... Revision 0

List of Effective Pages (continued)

6.8-32 ..... Revision 0
6.8-33 ..... Revision 0
6.8-34 ..... Revision 0
6.8-35 ..... Revision 0
6.8-36 ..... Revision 0
6.8-37 ..... Revision 0
6.8-38 ..... Revision 0
6.8-39 ..... Revision 0
6.8-40 ..... Revision 0
6.8-41 ..... Revision 0
6.8-42 ..... Revision 0
6.8-43 ..... Revision 0
6.8-44 ..... Revision 0
6.8-45 ..... Revision 0
6.8-46 ..... Revision 0
6.8-47 ..... Revision 0
6.8-48 ..... Revision 0
6.8-49 ..... Revision 0
6.8-50 ..... Revision 0
6.8-51 ..... Revision 0
6.8-52 ..... Revision 3
6.8-53 ..... Revision 3
6.8-54 ..... Revision 3
6.8-55 ..... Revision 3
6.8-56 ..... Revision 3
6.8-57 ..... Revision 3
6.8-58 ..... Revision 3
6.8-59 ..... Revision 3
6.8-60 ..... Revision 3
6.8-61 ..... Revision 3
6.8-62 ..... Revision 3
6.8-63 ..... Revision 3
6.8-64 ..... Revision 3
6.8-65 ..... Revision 3
6.8-66 ..... Revision 3

Chapter 7

7-i ..... Revision 4
7-ii ..... Revision 4
7.1-1 ..... Revision 3
7.1-2 ..... Revision 4
7.1-3 ..... Revision 4
7.1-4 ..... Revision 4
7.1-5 ..... Revision 4
7.1-6 ..... Revision 4
7.1-7 ..... Revision 4
7.1-8 ..... Revision 4
7.1-9 ..... Revision 4
7.2-1 ..... Revision 3
7.2-2 ..... Revision 0
7.3-1 ..... Revision 0
7.4-1 ..... Revision 3
7.5-1 ..... Revision 4

Chapter 8

8-i .....Amendment 1
8-ii ..... Revision 3
8-1 ..... Revision 4
8-2 ..... Revision 4
8.1-1 ..... Revision 4
8.1.1-1 ..... Revision 3
8.1.1-2 ..... Revision 4
8.1.1-3 ..... Revision 4
8.1.1-4 ..... Revision 4
8.1.1-5 ..... Revision 4
8.1.1-6 ..... Revision 4
8.1.1-7 ..... Revision 3
8.1.1-8 ..... Revision 4
8.1.1-9 ..... Revision 3
8.1.1-10 ..... Revision 4
8.1.2-1 ..... Revision 4

List of Effective Pages (continued)

8.1.2-2 ..... Revision 4
8.1.3-1 ..... Revision 3
8.1.3-2 ..... Revision 3
8.2-1 ..... Amendment 2
8.2-2 ..... Revision 4
8.3-1 ..... Revision 4
8.3-2 ..... Revision 3
8.3-3 ..... Revision 3
8.3-4 ..... Revision 3
8.4-1 ..... Revision 0

Chapter 9

9-i ..... Revision 4
9.1-1 ..... Revision 4
9.1-2 ..... Revision 4
9.1-3 ..... Revision 4
9.1-4 ..... Revision 4
9.1-5 ..... Revision 4
9.1-6 ..... Revision 4
9.1-7 ..... Revision 4
9.1-8 ..... Revision 4
9.1-9 ..... Revision 4
9.1-10 ..... Revision 4
9.2-1 ..... Revision 3
9.2-2 ..... Revision 4
9.2-3 ..... Revision 4
9.3-1 ..... Revision 4

Chapter 10

10-i ..... Amendment 1
10-ii ..... Revision 3
10.1-1 ..... Revision 3
10.1-2 ..... Revision 3
10.2-1 ..... Revision 3
10.2-2 ..... Revision 3
10.3-1 ..... Revision 3
10.3-2 ..... Revision 3
10.3-3 ..... Revision 3
10.3-4 ..... Revision 0
10.3-5 ..... Revision 3
10.3-6 ..... Revision 3
10.3-7 ..... Revision 0
10.3-8 ..... Revision 3
10.3-9 ..... Revision 3
10.4-1 ..... Revision 3
10.4-2 ..... Revision 3
10.4-3 ..... Revision 3
10.4-4 ..... Revision 3
10.4-5 ..... Revision 3
10.5-1 ..... Amendment 1
10.6-1 ..... Revision 0

Chapter 11

11-i ..... Amendment 1
11-ii ..... Revision 3
11-iii ..... Revision 3
11-iv ..... Revision 3
11-v ..... Revision 3
11-vi ..... Revision 3
11-vii ..... Revision 3
11-viii ..... Revision 3
11-ix ..... Revision 3
11-x ..... Revision 3
11-1 ..... Revision 0
11.1.1-1 ..... Revision 0
11.1.1-2 ..... Revision 3
11.1.1-3 ..... Revision 0
11.1.1-4 ..... Revision 0
11.1.1-5 ..... Revision 0
11.1.1-6 ..... Revision 0

List of Effective Pages (continued)

11.1.2-1 ..... Revision 3
11.1.2-2 ..... Revision 0
11.1.2-3 ..... Revision 3
11.1.3-1 ..... Revision 3
11.1.3-2 ..... Revision 3
11.1.3-3 ..... Revision 3
11.1.3-4 ..... Revision 3
11.1.3-5 ..... Revision 3
11.1.3-6 ..... Revision 3
11.1.3-7 ..... Revision 3
11.1.3-8 ..... Revision 3
11.1.3-9 ..... Revision 3
11.1.3-10 ..... Revision 3
11.1.3-11 ..... Revision 3
11.1.3-12 ..... Revision 3
11.1.3-13 ..... Revision 3
11.1.3-14 ..... Revision 3
11.1.3-15 ..... Revision 3
11.1.3-16 ..... Revision 3
11.1.4-1 ..... Amendment 1
11.1.4-2 ..... Revision 0
11.1.5-1 ..... Revision 0
11.1.5-2 ..... Revision 0
11.1.6-1 ..... Amendment 1
11.2-1 ..... Amendment 1
11.2.1-1 ..... Revision 3
11.2.1-2 ..... Revision 3
11.2.1-3 ..... Revision 3
11.2.1-4 ..... Revision 3
11.2.1-5 ..... Revision 3
11.2.1-6 ..... Revision 3
11.2.1-7 ..... Revision 3
11.2.2-1 ..... Revision 0
11.2.3-1 ..... Revision 3
11.2.3-2 ..... Revision 0
11.2.4-1 ..... Revision 3
11.2.4-2 ..... Revision 3
11.2.4-3 ..... Revision 3
11.2.4-4 ..... Revision 3
11.2.4-5 ..... Revision 3
11.2.4-6 ..... Revision 3
11.2.4-7 ..... Revision 3
11.2.4-8 ..... Revision 3
11.2.4-9 ..... Revision 3
11.2.4-10 ..... Revision 3
11.2.4-11 ..... Revision 3
11.2.4-12 ..... Revision 0
11.2.4-13 ..... Revision 0
11.2.4-14 ..... Revision 0
11.2.4-15 ..... Revision 0
11.2.4-16 ..... Revision 0
11.2.4-17 ..... Revision 0
11.2.4-18 ..... Revision 0
11.2.4-19 ..... Revision 0
11.2.4-20 ..... Revision 0
11.2.4-21 ..... Revision 0
11.2.4-22 ..... Revision 3
11.2.4-23 ..... Revision 3
11.2.4-24 ..... Revision 3
11.2.4-25 ..... Revision 3
11.2.4-26 ..... Revision 3
11.2.4-27 ..... Revision 3
11.2.5-1 ..... Revision 0
11.2.6-1 ..... Revision 3
11.2.6-2 ..... Revision 3
11.2.6-3 ..... Amendment 2
11.2.6-4 ..... Revision 0
11.2.6-5 ..... Revision 3
11.2.7-1 ..... Revision 3
11.2.7-2 ..... Revision 3

List of Effective Pages (continued)

11.2.8-1 ..... Revision 3
11.2.8-2 ..... Revision 0
11.2.8-3 ..... Revision 3
11.2.8-4 ..... Revision 3
11.2.8-5 ..... Revision 3
11.2.8-6 ..... Revision 3
11.2.8-7 ..... Revision 3
11.2.8-8 ..... Revision 3
11.2.8-9 ..... Revision 3
11.2.9-1 ..... Revision 0
11.2.9-2 ..... Revision 3
11.2.9-3 ..... Revision 3
11.2.9-4 ..... Revision 3
11.2.9-5 ..... Revision 3
11.2.9-6 ..... Revision 3
11.2.9-7 ..... Revision 3
11.2.10-1 ..... Revision 0
11.2.10-2 ..... Revision 0
11.2.10-3 ..... Revision 0
11.2.10-4 ..... Revision 0
11.2.11-1 ..... Revision 0
11.2.11-2 ..... Revision 3
11.2.11-3 ..... Revision 3
11.2.11-4 ..... Revision 3
11.2.11-5 ..... Revision 0
11.2.11-6 ..... Revision 0
11.2.11-7 ..... Revision 0
11.2.11-8 ..... Revision 3
11.2.11-9 ..... Revision 3
11.2.11-10 ..... Revision 3
11.2.11-11 ..... Revision 3
11.2.11-12 ..... Revision 0
11.2.11-13 ..... Revision 0
11.2.11-14 ..... Revision 3
11.2.12-1 ..... Revision 0
11.2.12-2 ..... Revision 3
11.2.12-3 ..... Revision 3
11.2.12-4 ..... Revision 3
11.2.12-5 ..... Revision 3
11.2.12-6 ..... Revision 3
11.2.12-7 ..... Revision 3
11.2.12-8 ..... Revision 3
11.2.12-9 ..... Revision 3
11.2.12-10 ..... Revision 3
11.2.12-11 ..... Revision 0
11.2.12-12 ..... Revision 0
11.2.12-13 ..... Revision 3
11.2.12-14 ..... Revision 3
11.2.12-15 ..... Revision 3
11.2.12-16 ..... Revision 0
11.2.12-17 ..... Revision 0
11.2.12-18 ..... Revision 0
11.2.12-19 ..... Revision 3
11.2.12-20 ..... Revision 3
11.2.12-21 ..... Revision 0
11.2.12-22 ..... Revision 3
11.2.12-23 ..... Revision 0
11.2.12-24 ..... Revision 3
11.2.12-25 ..... Revision 3
11.2.12-26 ..... Revision 3
11.2.12-27 ..... Revision 3
11.2.12-28 ..... Revision 3
11.2.12-29 ..... Revision 3
11.2.12-30 ..... Revision 3
11.2.12-31 ..... Revision 3
11.2.12-32 ..... Revision 3
11.2.12-33 ..... Revision 3
11.2.12-34 ..... Revision 3
11.2.12-35 ..... Revision 3
11.2.12-36 ..... Revision 3

List of Effective Pages (continued)

11.2.12-37 ..... Revision 3
11.2.12-38 ..... Revision 3
11.2.12-39 ..... Revision 3
11.2.12-40 ..... Revision 3
11.2.12-41 ..... Revision 3
11.2.12-42 ..... Revision 3
11.2.12-43 ..... Revision 3
11.2.12-44 ..... Revision 3
11.2.12-45 ..... Revision 3
11.2.12-46 ..... Revision 3
11.2.12-47 ..... Revision 3
11.2.12-48 ..... Revision 3
11.2.12-49 ..... Revision 3
11.2.12-50 ..... Revision 3
11.2.12-51 ..... Revision 3
11.2.12-52 ..... Revision 3
11.2.12-53 ..... Revision 3
11.2.12-54 ..... Revision 3
11.2.12-55 ..... Revision 3
11.2.12-56 ..... Revision 3
11.2.12-57 ..... Revision 3
11.2.12-58 ..... Revision 3
11.2.12-59 ..... Revision 3
11.2.12-60 ..... Revision 3
11.2.12-61 ..... Revision 3
11.2.12-62 ..... Revision 3
11.2.12-63 ..... Revision 3
11.2.12-64 ..... Revision 3
11.2.12-65 ..... Revision 3
11.2.12-66 ..... Revision 3
11.2.12-67 ..... Revision 3
11.2.12-68 ..... Revision 3
11.2.12-69 ..... Revision 3
11.2.12-70 ..... Revision 3
11.2.12-71 ..... Revision 3
11.2.13-1 ..... Revision 0
11.2.13-2 ..... Revision 3
11.2.13-3 ..... Revision 0
11.2.14-1 ..... Revision 3
11.2.14-2 ..... Revision 3
11.2.15-1 ..... Revision 3
11.2.15-2 ..... Revision 3
11.2.15-3 ..... Amendment 1
11.2.15-4 ..... Amendment 2
11.2.15-5 ..... Amendment 2
11.2.15-6 ..... Amendment 1
11.2.15-7 ..... Amendment 1
11.2.15-8 ..... Amendment 1
11.2.15-9 ..... Amendment 1
11.2.15-10 ..... Amendment 1
11.2.15-11 ..... Amendment 1
11.2.15-12 ..... Amendment 1
11.2.15-13 ..... Amendment 1
11.2.15-14 ..... Revision 3
11.2.15-15 ..... Revision 3
11.2.15-16 ..... Revision 3
11.2.15-17 ..... Revision 3
11.2.15-18 ..... Amendment 1
11.2.15-19 ..... Amendment 1
11.2.15-20 ..... Amendment 1
11.2.15-21 ..... Amendment 1
11.2.15-22 ..... Amendment 1
11.2.15-23 ..... Amendment 2
11.2.15-24 ..... Amendment 2
11.2.15-25 ..... Revision 4
11.2.15-26 ..... Amendment 2
11.2.15-27 ..... Amendment 1
11.2.15-28 ..... Amendment 2
11.2.15-29 ..... Revision 4
11.2.15-30 ..... Revision 3

List of Effective Pages (continued)

11.2.15-31 ..... Revision 3
11.2.15-32 ..... Revision 4
11.2.15-33 ..... Amendment 2
11.2.15-34 ..... Amendment 2
11.2.15-35 ..... Amendment 2
11.3-1 ..... Revision 3
11.3-2 ..... Revision 0
11.3-3 ..... Revision 0
11.3-4 ..... Revision 3
11.3-5 ..... Revision 3

Chapter 12

12-i ..... Amendment 1
12-ii ..... Amendment 1
12-1 ..... Revision 3
12-2 ..... Revision 3
12-3 ..... Revision 3
12-4 ..... Revision 3
12A-1 ..... Revision 3
12A-2 ..... Revision 3
12B-1 ..... Revision 3
12B-2 ..... Revision 3
12C-1 ..... Revision 0
12C-2 ..... Revision 3
12C1-1 ..... Revision 3
12C2-1 ..... Revision 3
12C2-2 ..... Revision 3
12C3-1 ..... Revision 0
12C3-2 ..... Revision 0
12C3-3 ..... Revision 0
12C3-4 ..... Revision 0
12C3-5 ..... Revision 0
12C3-6 ..... Revision 0
12C3-7 ..... Revision 0
12C3-8 ..... Revision 0
12C3-9 ..... Revision 4
12C3-10 ..... Revision 3
12C3-11 ..... Revision 4
12C3-12 ..... Revision 4
12C3-13 ..... Revision 4
12C3-14 ..... Revision 3
12C3-15 ..... Revision 3
12C3-16 ..... Revision 4
12C3-17 ..... Revision 3
12C3-18 ..... Revision 3
12C3-19 ..... Revision 4
12C3-20 ..... Revision 4
12C3-21 ..... Revision 3
12C3-22 ..... Revision 4
12C3-23 ..... Revision 3
12C3-24 ..... Revision 4
12C3-25 ..... Revision 3
12C3-26 ..... Revision 3
12C3-27 ..... Revision 3
12C3-28 ..... Revision 3
12C3-29 ..... Revision 3
12C3-30 ..... Revision 4
12C3-31 ..... Revision 4
12C3-32 ..... Revision 3
12C3-33 ..... Revision 3
12C3-34 ..... Revision 3
12C3-35 ..... Revision 3
12C3-36 ..... Revision 3
12C3-37 ..... Revision 3
12C3-38 ..... Revision 3

Chapter 13

13-i ..... Revision 0
13-ii ..... Revision 0
13.1-1 ..... Revision 0

List of Effective Pages (continued)

13.1-2 ..... Revision 0
13.2-1 ..... Revision 0
13.2-2 ..... Revision 0
13.2-3 ..... Revision 0
13.2-4 ..... Revision 0
13.2-5 ..... Revision 0
13.2-6 ..... Revision 0
13.2-7 ..... Revision 0
13.2-8 ..... Revision 3
13.3-1 ..... Revision 3

Chapter 1

1.1 Introduction

The Universal Storage System is a spent fuel dry storage system that uses a Vertical Concrete Cask and a stainless steel Transportable Storage Canister with a double welded closure to safely store spent fuel. The Transportable Storage Canister is stored in the central cavity of the Vertical Concrete Cask and is compatible with the Universal Transport Cask for future off-site shipment. The concrete cask provides radiation shielding and contains internal air flow paths that allow the decay heat from the canister contents to be removed by natural air circulation around the canister wall. The Universal Storage System is designed and analyzed for a 50-year service life.

The principal components of the Universal Storage System are the canister, the concrete cask, and the transfer cask. The loaded canister is moved to and from the concrete cask by using the transfer cask. The transfer cask provides radiation shielding while the canister is being closed and sealed and while the canister is being transferred. The canister is placed in the concrete cask by positioning the transfer cask with the loaded canister on top of the concrete cask and lowering the canister into the concrete cask. Figure 1.1-1 depicts the major components of the Universal Storage System in such a configuration.

The Universal Storage System is designed to safely store up to 24 PWR or up to 56 BWR spent fuel assemblies. The fuel specifications and parameters that serve as the design basis are presented in Tables 2.1.1-1 and 2.1.2-1 for PWR and BWR fuel assemblies, respectively. The spent fuel considered in the design basis includes fuel assemblies that have different overall lengths. The range of overall lengths of the PWR fuel assembly population is grouped into three classes. To accommodate the three classes, the Universal Storage System principal components—the transportable storage canister, transfer cask and vertical concrete cask—are provided in three different lengths. Similarly, BWR fuel assemblies are grouped into two classes, which are also accommodated by two different lengths of the principal components. The class designations of these principal components, and corresponding lengths, are shown on the License Drawings. The identification of representative fuel assemblies, by class, is shown in Tables 6.2-1 and 6.2-2 for PWR and BWR fuel, respectively. Fuel assemblies were grouped to facilitate licensing evaluations. Bounding configurations were evaluated and no restriction is placed on the loading of a given fuel assembly type into a particular UMS® canister class.

The inclusion of nonfuel-bearing components or fixtures in a fuel assembly can increase its overall length, resulting in the need to use the next longer class of Universal Storage System components. Stainless steel spacers may be used in a given class of canister to allow loading of fuel that is significantly shorter than the canister length. The BWR fuel assembly classes are

evaluated for the effects of the zirconium alloy channel that surrounds the fuel assembly in reactor operations.

In addition to the design basis fuel, fuel that is unique to a certain reactor site, referred to as site specific fuel, is also evaluated. Site specific fuel consists of fuel assemblies that are configured differently, or have different parameters (such as enrichment or burnup), than the design basis fuel assemblies. These site specific fuel configurations result from conditions that occurred during reactor operations, from participation in research and development programs (testing programs intended to improve reactor operations), or from the insertion of control components or other items within the fuel assembly.

Site specific spent fuels are described in Section 1.3.2. These site specific fuel configurations are either shown to be bounded by the design basis fuel analysis, or are separately evaluated. Unless specifically excepted, site specific fuel must also meet the conditions for the design basis fuel presented in Section 1.3.1.

Three canister classes accommodate the PWR fuel assemblies, and two canister classes accommodate the BWR fuel assemblies. Each of the five canisters is stored in a concrete cask of specific length designed to accommodate the specific canister. The fuel is loaded into the appropriate canister prior to movement of the canister into the concrete cask. Figure 1.1-2 depicts a Transportable Storage Canister containing a PWR spent fuel basket. A canister containing a BWR spent fuel basket is shown in Figure 1.1-3.

The system design and analyses are performed in accordance with 10 CFR 72, ANSI/ANS 57.9 [6] and the applicable sections of the ASME Boiler and Pressure Vessel Code and the American Concrete Institute Code [7].

supports the canister. The weldment structure includes the baffle assembly configuration, as shown in Drawing 790-561. The decay heat is transferred from the fuel assemblies to the tubes in the fuel basket and through the heat transfer disks to the canister wall. Heat flows by radiation and convection from the canister wall to the air circulating through the concrete cask annular air passage and is exhausted through the air outlets. This passive cooling system is designed to maintain the peak cladding temperature of the zirconium alloy-clad fuel well below acceptable limits during long-term storage. This design also maintains the bulk concrete temperature below 150°F and localized concrete temperatures below 200°F in normal operating conditions.

The top of the Vertical Concrete Cask is closed by a shield plug and lid. The shield plug is approximately 5 inches thick and incorporates carbon steel plate as gamma radiation shielding, and NS-4-FR or NS-3 as neutron radiation shielding. A carbon steel lid that provides additional gamma radiation shielding is installed above the shield plug. The shield plug and lid reduce skyshine radiation and provide a cover and seal to protect the canister from the environment and postulated tornado missiles. The lid is bolted in place and has tamper indicating seals on two of the installation bolts. An optional supplemental shielding fixture, shown in Drawing 790-613, may be installed in the air inlets to reduce the radiation dose rate at the base of the cask.

Fabrication of the concrete cask involves no unique or unusual forming, concrete placement, or reinforcement requirements. The concrete portion of the concrete cask is constructed by placing concrete between a reusable, exterior form and the inner metal liner. Reinforcing bars are used near the inner and outer concrete surfaces, to provide structural integrity. The inner liner and base of the concrete cask are shop fabricated. The principal fabrication specifications for the concrete cask are shown in Table 1.2-6.

1.2.1.4 Transfer Cask

The transfer cask is a heavy lifting device, which is designed, fabricated, and load-tested to meet the requirements of NUREG-0612 [11] and ANSI N14.6 [12]. The transfer cask can be provided in either a Standard or Advanced configuration. Canister handling, fuel loading and canister closing are operationally identical for either transfer cask configuration.

The transfer cask provides biological shielding when it contains a loaded canister and is used for the vertical transfer of the canister between work stations and the concrete cask, or transport cask. Five transfer casks of either configuration, having different lengths, are designed to handle the five canisters of different lengths containing one of three classes of PWR fuel assemblies or two classes of BWRfuel assemblies. In addition, a Transfer Cask Extension may be used to extend the

operational height, when using the standard transfer cask. This height extension allows a transfer cask designed for a specific canister class to be used with the next longer canister.

The transfer cask design incorporates a top retaining ring, which is bolted in place to prevent a loaded canister from being inadvertently lifted through the top of the transfer cask. The transfer cask has retractable bottom shield doors. During loading operations, the doors are closed and secured by door lock bolts/lock pins, so they cannot inadvertently open. During unloading, the doors are retracted using hydraulic cylinders to allow the canister to be lowered into a concrete cask for storage or into a transport cask. A typical transfer cask is shown in Figure 1.2-2. The principal design parameters of the transfer casks are shown in Table 1.2-7.

To minimize the potential for contamination of a canister or the inside of the transfer cask during loading operations in the spent fuel pool, clean water is circulated in the annular gap between the transfer cask interior surface and the canister exterior surface. Clean water is processed or filtered pool water, or any water external to the spent fuel pool that is compatible. The transfer cask has eight supply and two discharge lines passing through its wall. Normally, two of the lines are connected to allow clean water under pressure to flow into and through the annular gap to minimize potential for the intrusion of pool water when the canister is being loaded. Lines not used for clean water supply may be capped. The eight supply lines can also be used for the introduction of forced air at the bottom of the transfer cask to achieve cooling of the canister contents. This allows the canister to remain in the transfer cask for an extended period, if necessary, during canister closing operations.

Standard and Advanced Transfer Casks

The Standard and Advanced transfer casks are designed for lifting and handling in the vertical orientation only. The Standard transfer cask may be used to lift canisters weighing up to 88,000 pounds. The Advanced transfer cask is similar to the Standard transfer cask, except that the Advanced transfer cask incorporates a trunnion support plate that allows the Advanced transfer cask to lift canisters weighing up to 98,000 pounds. The Standard and Advanced transfer casks have four lifting trunnions, which allow for redundant load path lifting. Both transfer casks incorporate a multiwall (steel/lead/NS-4-FR/steel) design, and both designs have a maximum empty weight of approximately 121,500 pounds. The Standard and Advanced transfer cask designs are shown in Drawing 790-560.

1.2.1.5 Auxiliary Equipment

This section presents a brief description of the principal auxiliary equipment needed to operate the Universal Storage System in accordance with its design.

1.2.1.5.1 Transfer Adapter

The transfer adapter is a carbon steel table that is positioned on the top of the Vertical Concrete Cask or the Universal Transport Cask and mates the transfer cask to either of those casks. It has a large center hole that allows the Transportable Storage Canister to be raised or lowered through the plate into or out of the transfer cask. Rails are incorporated in the transfer adapter to guide and support the bottom shield doors of the transfer cask when they are in the open position. The transfer adapter also supports the hydraulic system and the actuators that open and close the transfer cask bottom doors.

1.2.1.5.2 Air Pad Rig Set

The air pad rig set (air pad set) is a commercially available device, sometimes referred to as an air pallet. When inflated, the air pad rig set lifts the concrete cask by using high volume air flow. The air pads employ a continuous, regulated air flow and a control system that equalizes lifting heights of the four air pads by regulating compressed air flow to each of the air pads. The compressed air supply creates an air film between the inflated air cushion and the supporting surface. The thin film of air allows the concrete cask to be lifted and moved. Once lifted, the cask can be moved by a suitable towing vehicle, such as a commercial tug or forklift.

1.2.1.5.3 Automatic Welding System

The automatic welding system consists of commercially available components with a customized weld head. The components include a welding machine, a remote pendant, a carriage, a drive motor and welding wire motor, and the weld head. The system is designed to make at least one weld pass automatically around the canister after its weld tip is manually positioned at the proper location. As a result, radiation exposure during canister closure is much less than would be incurred from manual welding.

1.2.1.5.4 Draining and Drying System

The draining and drying system consists of a suction pump and a vacuum pump. The suction pump is used to remove free water from the canister cavity. The vacuum pump is a two-stage unit for drying the interior of the canister. The first stage is a large capacity or "roughing" pump intended to remove free water not removed by the suction pump. The second stage is a vacuum pump used to evacuate the canister interior of the small amounts of remaining moisture and establish the vacuum condition.

1.2.1.5.5 Lifting Jacks

Hydraulic jacks are installed at jacking pads in the air inlets at the bottom of the concrete cask to lift the cask so that the air pad set can be installed or removed. Four hydraulic jacks are provided, along with a control panel, an electric hydraulic oil pump, an oil reservoir tank and all hydraulic lines and fittings. The jacks are used to lift the cask approximately three inches. This permits installation of the air pad rig set under the concrete cask.

1.2.1.5.6 Heavy-Haul Trailer

The heavy-haul trailer is used to move the Vertical Concrete Cask. A special trailer is designed for transport of the empty or loaded concrete cask. The design incorporates a jacking system that facilitates raising the concrete cask to allow installation of the air pad set used to move the cask onto the storage pad. The trailer incorporates both reinforcing to increase the trailer load-bearing area and design features that reduce its turning radius. However, any commercial double-drop-frame trailer having a deck height approximately matching that of the storage pad could be used.

1.2.1.5.7 Transporter

A cask transporter may also be used to move an empty or loaded Vertical Concrete Cask. The typical design incorporates a vertical lifting system that raises the concrete cask using the Vertical Concrete Cask lifting lugs. The transporter may be a self-propelled, towed or pushed design.

1.2.1.5.8 Helium Leak Test Equipment

A helium leak detector and leak test fixture are required to verify the integrity of the welds of the canister shield lid. The helium leak detector is the mass spectrometer type.

1.2.1.5.9 Rigging and Slings

Load rated rigging attachments and slings are provided for major components. The rigging attachments are swivel hoist rings that allow attachment of the slings to the hook. All slings are commercially purchased to have adequate safety margin to meet the requirements of ANSI N14.6 and NUREG-0612. The slings include a concrete cask lid sling, concrete cask shield plug sling, canister shield lid sling, loaded canister transfer sling (also used to handle the structural lid), and a canister retaining ring sling. The appropriate rings or eye bolts are provided to accommodate each sling and component. Note: A cask user may utilize other slings, as needed, to perform the numerous required lifts of the UMS® components, provided that the slings meet all applicable safety requirements.

The transfer cask lifting yoke is specially designed and fabricated for lifting the transfer cask. It is designed to meet the requirements of ANSI N14.6 and NUREG-0612. It is designed as a special lifting device for critical loads. The transfer cask lifting yoke is initially load tested to 300 percent of the maximum service load.

1.2.1.5.10 Transfer Cask Extension

A transfer cask extension may be used to extend the operational height of a transfer cask by approximately 10 inches. This height extension allows a transfer cask designed for a specific canister class to be used with the next longer canister. The extension is stainless steel.

1.2.1.5.11 Temperature Instrumentation

The Vertical Concrete Cask has four air outlets near the top of the cask and four air inlets at the bottom. Each outlet is equipped with a permanent remote temperature detector mounted in the outlet air plenum. The detector is used to measure the outlet air temperature, which can be read at a display device located on the outside surface of the concrete cask or at a remote location. The detectors are installed on all of the concrete casks at the Independent Spent Fuel Storage Installation (ISFSI) facility.

1.2.1.6 Universal Transport Cask

The Universal Transport Cask is designed to transport the Transportable Storage Canister. The canister, which may contain PWR or BWR spent fuel, is positioned in the Universal Transport Cask cavity by axial spacer(s) at the bottom of the cavity. A Class 1, 2 or 5 canister is located by one spacer. A Class 4 canister is located by four spacers. A Class 3 canister has no spacers. The

spacer(s) are required because the Universal Transport Cask cavity length is 192.5 inches, while the lengths of the canisters for different classes of fuel vary from 175.3 inches to 192.0 inches.

The transport configuration of the Universal Transport Cask is shown in Figure 1.2-3. The Universal Transport Cask is assigned 10 CFR 71 [13] Docket No. 71-9270 [3].

1.2.2 Operational Features

In storage, the only active system is for temperature monitoring of the outlet air. This temperature is recorded daily as a check of the thermal performance of the concrete casks. This system does not penetrate the confinement boundary and is not essential to the safe operation of the Universal Storage System.

The principal activities associated with the use of the Universal Storage System are closing the canister and loading the canister in the concrete cask. The transfer cask is designed to meet the requirements of these operations. The transfer cask holds the canister during loading with fuel; provides biological shielding during closing of the canister; and provides the means by which the loaded canister is moved to, and installed in, the concrete cask.

The canister consists of five principal components: the canister shell (side wall and bottom); the shield lid; the vent port; the drain port (together with the vent and drain port covers); and the structural lid. A drain tube extends from the shield lid drain port to the bottom of the canister. The location of the drain and vent ports is shown in Figure 8.1.1-1. The vent and drain ports allow the draining, vacuum drying, and backfilling with helium necessary to provide a dry, inert atmosphere for the contents. The vent and drain port covers, the shield lid, the canister shell, and the joining welds form the primary confinement boundary. A secondary confinement boundary is formed over the shield lid by the structural lid and the weld that joins it to the canister shell. The primary and secondary boundaries are shown in Figures 7.1-1 and 7.1-2.

The structural lid contains the drilled and tapped holes for attachment of the swivel hoist rings used to lift the loaded canister. The drilled and tapped holes are filled with bolts or plugs to avoid collecting debris, and to preclude the possibility of radiation streaming from the holes, when the hoist rings are not installed.

The step-by-step procedures for the operation of the Universal Storage System are presented in Chapter 8.0. The following is a list of the principal activities. This list assumes that the empty canister is installed in the transfer cask for spent fuel pool loading (see Figure 1.2-4).

- Lift the transfer cask over the pool and start the flow of clean or filtered pool water to the transfer cask annulus and canister. After the annulus and canister fill, lower the cask to the bottom of the pool.

- Load the selected spent fuel assemblies into the canister and set the shield lid.
- Raise the transfer cask from the pool. Decontaminate the transfer cask exterior as it clears the pool surface. Drain the annulus. Place the transfer cask in the decontamination area.

  Note: As an alternative, some sites may choose to perform welding operations for closure of the canister in a cask loading pit with water around the canister (below the trunnions) and in the annulus. This alternative provides additional shielding during the closure operation.
- Weld the shield lid to the canister shell. Inspect and pressure test the weld. Drain the pool water from the canister. Attach the vacuum system to the drain line, and operate the system to achieve a vacuum.
- Hold the vacuum and backfill with helium to 1 atmosphere. Restart the vacuum system and remove the helium. After achieving vacuum, backfill and pressurize the canister with helium.
- Helium leak check the shield lid welds. Vent the helium pressure to 1 atmosphere (absolute). Install the vent and drain port covers and weld them to the shield lid. Inspect the port cover welds.
- Install the structural lid and weld it to the canister shell. Inspect the structural lid weld. Install the hoist rings and attach the canister lifting slings. (Note: Alternative canister lifting system designs may be utilized based on a site-specific analysis and evaluation.) Install the transfer adapter on the concrete cask.
- Lift the transfer cask to the top of the concrete cask and set it on the transfer adapter. (See Figure 1.2-5). Ensure that the bottom door hydraulic actuators are engaged.
- Attach the canister lifting slings or an alternative lifting device to the crane hook and lift the canister off of the transfer cask bottom doors.
- Open the bottom doors of the transfer cask.
- Lower the canister into the concrete cask (see Figure 1.2-6). Remove the canister lifting equipment.
- Remove the transfer cask and transfer adapter.
- Install the shield plug and lid on the concrete cask.
- Move the loaded concrete cask to the storage pad.
- Using the air pad rig set and a towing vehicle, move the concrete cask to its designated location on the storage pad.

The removal operations are essentially the reverse of these steps, except that weld removal and cool down of the contents is required.

The auxiliary equipment needed to operate the Universal Storage System is described in Section 1.2.1.5. Other items required are miscellaneous hardware, connection hose and fittings, and hand tools typically found at a reactor site.

Figure 1.2-1 Vertical Concrete Cask

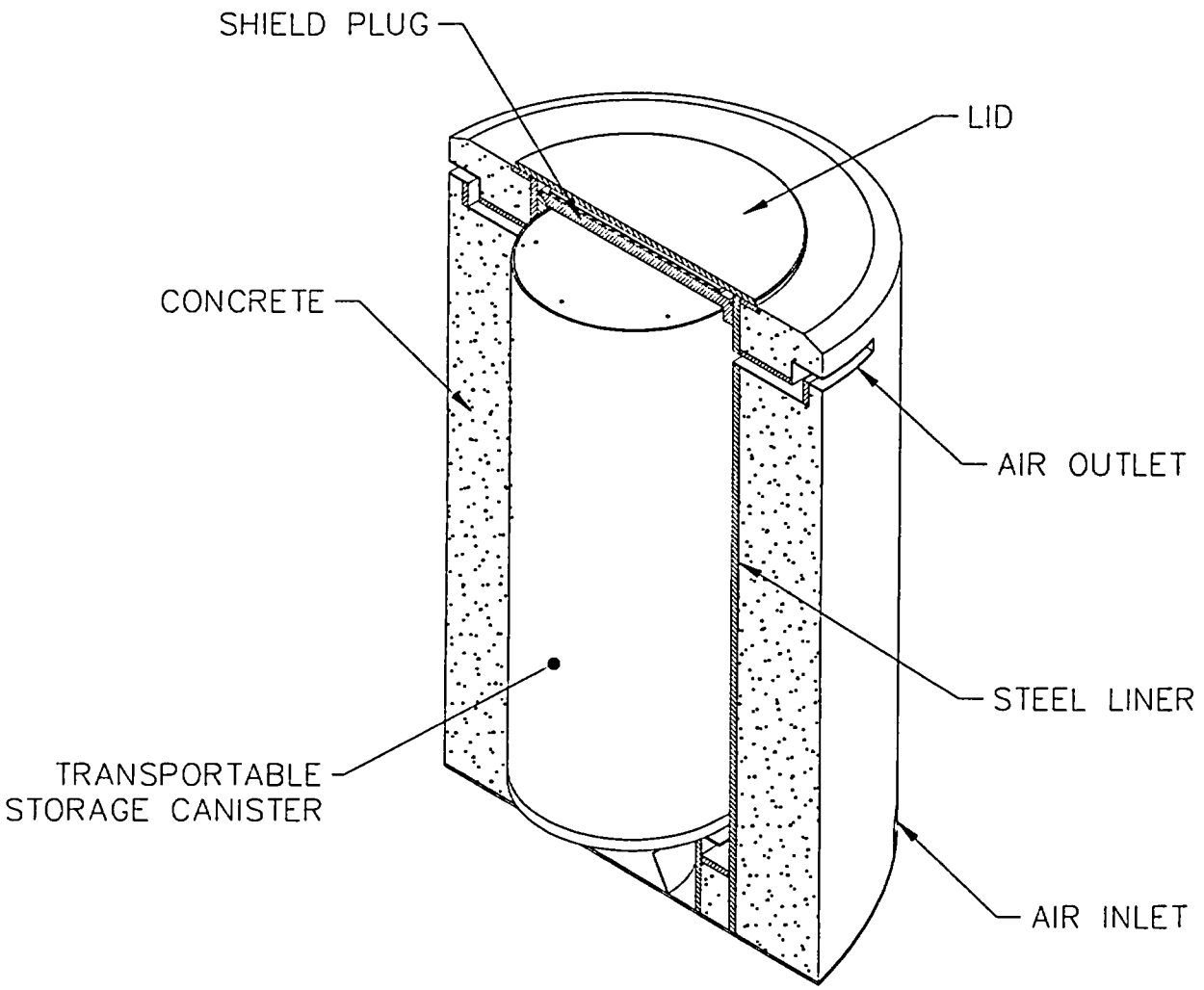

Table 1.2-6 Vertical Concrete Cask Fabrication Specification Summary

Note: The American Society for Testing and Materials (ASTM) approved revisions of the ASTM standards referenced in this table that are in effect at the time of product/test procurement shall be invoked in meeting FSAR requirements.

Materials

- Concrete mix shall be in accordance with the requirements of ACI 318 and ASTM C94 [19].
- Type II Portland Cement, ASTM C150 [20].
- Fine aggregate ASTM C33 [21] or C637 [22].
- Coarse aggregate ASTM C33.
- If concrete temperatures of general or local areas exceed 200°F but would not exceed 300°F, aggregates are selected which are acceptable for concrete in this temperature range. The following criteria for fine and coarse aggregates are acceptable:
  - Satisfy ASTM C33 requirements and other requirements referenced in ACI 349 for aggregates, and
  - Have demonstrated a coefficient of thermal expansion (tangent in temperature range of 70°F to 100°F) no greater than 6×10^{-6} in./in./°F, or be one of the following minerals: limestone, dolomite, marble, basalt, granite, gabbro, or rhyolite.
- Admixtures
  - Water Reducing and Superplasticizing ASTM C494 [23].
  - Pozzolanic Admixture (Loss on Ignition 6% or less) ASTM C618 [24].
- Compressive Strength 4000 psi at 28 days.
- Specified Air Entrainment per ACI 318.
- All steel components shall be of material as specified in the referenced drawings.

Welding

- Visual inspection of all welds shall be performed to the requirements of AWS D1.1, Section 8.6.1 [25].

Construction

- A minimum of two concrete samples for each concrete cask shall be taken in accordance with ASTM C172 [26] and ASTM C31 [27] for the purpose of obtaining concrete slump, density, air entrainment, and 28-day compressive strength values. The two samples shall not be taken from the same batch or truckload.
- Test specimens shall be tested in accordance with ASTM C39 [28].
- Formwork shall be in accordance with ACI 318.
- All sidewall formwork shall remain in place in accordance with ACI 318.
- Grade, type, and details of all reinforcing steel shall be in accordance with the referenced drawings.
- Embedded items shall conform to ACI 318 and the referenced drawings.
- The placement of concrete shall be in accordance with ACI 318.
- Surface finish shall be in accordance with ACI 318.

Quality Assurance

The concrete cask shall be constructed under a quality assurance program that meets 10 CFR 72 Subpart G. The quality assurance program must be accepted by NAC International and the licensee prior to initiation of the work.

Table 1.2-7 Major Physical Design Parameters of the Transfer Casks

Parameter	Transfer Cask Configuration	
	Standard	**Advanced**
Inside Diameter (in.)	67.8	67.8
Outside Diameter (in.)	85.3	85.3
Cavity Height (nominal) (in.)		
Class 1	177.3	177.3
Class 2	186.4	186.4
Class 3	194.0	194.0
Class 4	187.8	187.8
Class 5	192.6	192.6
Empty Weight (nominal) (lbs)		
Class 1	112,300	112,300
Class 2	117,300	117,300
Class 3	121,500	121,500
Class 4	118,100	118,100
Class 5	120,700	120,700
Allowable Canister Weight	≤ 88,000	≤ 98,000

1.3 Universal Storage System Contents

The Universal Storage System is designed to store up to 24 PWR fuel assemblies or up to 56 BWR fuel assemblies. The design basis fuel contents are subject to the limits presented in Section 1.3.1. Site specific contents are described in Section 1.3.2. The site specific contents are either shown to be bounded by the evaluation of the design basis fuel, or are separately evaluated to establish limits which are maintained by administrative controls.

1.3.1 Design Basis Spent Fuel

The Universal Storage System is evaluated based on a set of fuel assembly parameters that establish bounding conditions for the system. The bounding fuel parameters are provided in Table 2.1.1-1 for PWR fuel and in Table 2.1.2-1 for BWR fuel. Fuel assembly designs having parameters bounded by those in Tables 2.1.1-1 and 2.1.2-1 are acceptable for loading. Four different assembly array sizes: 14 × 14, 15 × 15, 16 × 16 and 17 × 17, produced by several different fuel vendors, were evaluated in the development of the PWR design basis spent fuel description. Three different arrays: 7 × 7, 8 × 8 and 9 × 9, produced by several different fuel vendors were evaluated in the development of the BWR design basis spent fuel description.

The Universal Storage System fuel limits are:

1. The characteristics of the PWR and BWR fuel to be stored shall be in accordance with Tables 2.1.1-1 and 2.1.2-1, respectively.

2. The total decay heat of the PWR fuel shall not exceed 23.0 kW.

3. The total decay heat of the BWR fuel shall not exceed 23.0 kW.

4. The maximum initial enrichment shall not exceed 5.0 wt % ^{235}U for PWR and 4.8 wt % ^{235}U for BWR fuel assemblies.

5. The maximum initial enrichment of the PWR fuel is based on a pool/canister water boron content of at least 1,000 parts per million for some fuel parameter combinations. The maximum initial enrichment of the BWR fuel is defined as the maximum initial peak planar-average enrichment. The initial peak planar-average enrichment is the maximum initial peak planar-average enrichment at any height along the axis of the fuel assembly. The initial peak planar-average may be higher than the bundle average enrichment value that appears in fuel design or plant documents. Unenriched fuel assemblies are not evaluated and are not included as a proposed content.

6. The maximum PWR fuel assembly burnup (MWD/MTU) and minimum cooling time (years) shall be as defined by Table 2.1.1-2.

7. The maximum BWR fuel assembly burnup (MWD/MTU) and minimum cooling time (years) shall be as defined by Table 2.1.2-2.

8. Radiation levels shall not exceed the requirements of 10 CFR 72.104 and 10 CFR 72.106.

9. An inert atmosphere shall be maintained within the canister where spent fuel is stored.

10. Stainless steel spacers may be used to axially position PWR fuel assemblies that are shorter than the canister cavity length to facilitate handling.

1.3.2 Site Specific Spent Fuel

This section describes fuel assembly characteristics and configurations, which are unique to specific reactor sites. These site specific content configurations result from conditions that occurred during reactor operations, participation in research and development programs (testing programs intended to improve reactor operations), and from the placement of control components or other items within the fuel assembly.

Site specific fuel assembly configurations are either shown to be bounded by the analysis of the standard design basis fuel assembly configuration of the same type (PWR or BWR), or are shown to be acceptable contents by specific evaluation of the configuration.

Unless specifically excepted, site specific fuel must meet all of the conditions specified for the design basis fuel presented in Section 1.3.1 above. Site specific fuels are also described in Section 2.1.3.

1.3.2.1 Maine Yankee Site Specific Spent Fuel

The configurations of Maine Yankee site specific fuel assemblies that have been evaluated and found to be acceptable contents are:

- Fuel assemblies with up to 176 fuel rods removed from the assembly lattice.
- Fuel assemblies with fuel rods replaced with stainless steel rods, solid zirconium alloy rods or fuel rods enriched to 1.95 wt % ^{235}U.
- Fuel assemblies with burnable poison rods replaced with hollow zirconium alloy tubes.
- Fuel assemblies that are variably enriched with a maximum fuel rod enrichment of 4.21 wt % ^{235}U and that also have a maximum planar average enrichment of 3.99 wt % ^{235}U.
- Fuel assemblies with variable enrichment and/or annular axial blankets.
- Fuel assemblies with a control element assembly inserted.
- Fuel assemblies with an instrument thimble inserted in the center guide tube.
- Fuel assemblies with up to two fuel rods inserted in any or all of the guide tubes.
- Fuel assemblies with inserted nonfuel components, including start-up sources.
- Consolidated fuel.
- Fuel assemblies having up to 100% of the rods damaged in each assembly.
- Fuel assemblies having a burnup of greater than 45,000 MWD/MTU but less than 50,000 MWD/MTU.

These site specific fuel configurations are evaluated against the limits established for the UMS® Storage System based on the design basis fuel. The site specific fuel is either shown to be bounded by the evaluation of the design basis fuel or is separately evaluated to establish limits which are maintained by preferential loading administrative controls. Where applicable to specific configurations, the preferential loading controls are described in Section 2.1.3.1.1. The preferential loading controls take advantage of design features of the UMS® Storage System to allow the loading of fuel configurations that may have higher burnup or additional hardware or fuel source material that is not specifically considered in the design basis fuel evaluation.

The Transportable Storage Canister loading procedures will indicate that the loading of a fuel configuration with removed fuel or poison rods, damaged or consolidated fuel in a Maine Yankee fuel can, or fuel with burnup greater than 45,000, but less than 50,000, MWD/MTU is administratively controlled in accordance with Section 2.1.3.1 and Table 2.1.3.1-1. As shown in the table, only one consolidated fuel lattice is loaded in any single canister. Preferential loading positions in the canister basket are shown in Figure 2.1.3.1-1.

THIS PAGE INTENTIONALLY LEFT BLANK

Table 1.5-1 NUREG-1536 Compliance Matrix (continued)

Chapter 4 – Thermal Evaluation		
Area	**Regulatory Requirement**	**Description of Compliance**
1. Minimum Lifetime	10 CFR Part 72 requires an analysis and evaluation of DCSS thermal design and performance to demonstrate that the cask will permit safe storage of the spent fuel for a minimum of 20 years.	Section 1.1 and Table 2-1 specify a 50-year design life for the system. Tables 4.1-4 and 4.1-5 demonstrate that the system's temperatures are maintained within their allowable limits.
2. Spent Fuel Cladding Protection	The spent fuel cladding must be protected against degradation that may lead to gross ruptures.	Tables 4.1-4 and 4.1-5 demonstrate that the fuel cladding temperatures are maintained within allowable limits.
3. Thermal Structures, Systems, and Components	Thermal structures, systems, and components important to safety must be described in sufficient detail to permit evaluation of their effectiveness. Applicable thermal requirements are identified, in part, in 10 CFR 72.24(c)(3), 72.24(d), 72.122(h)(1), 72.122(l), 72.128(a)(4), 72.236(f), 72.236(g), and 72.236(h).	The discussion of the thermal design features of the system is presented in Section 4.1.
	10 CFR 72.24(c)(3) Contents of Application: Descriptions of Components Important to Safety	Tables 4.1-4 and 4.1-5 demonstrate that the temperatures of SSCs are maintained within allowable limits for all components of the system, including the fuel cladding. Therefore, the system is not adversely affected by normal, off-normal, or accident condition events.
	10 CFR 72.24(d) Contents of Application: Margins of Safety / Mitigation of Accident Consequences	
	10 CFR 72.122(h)(1) Overall Requirements: Confinement Barriers and Systems	The temperatures of the system are maintained within allowable limits, and do not preclude retrieval of spent fuel from the system.
	10 CFR 72.122(l) Overall Requirements: Retrievability	
	10 CFR 72.128(a)(4) Criteria for Spent Fuel Storage and Handling: Testable Heat Removal Capacity	As specified in Section 9.1.7 and Appendix A, Section 3.1.6, the air temperature at the outlet vents is measured to ensure proper operation of the passive heat removal system.
	10 CFR 72.236(f) Specific Requirements for Spent Fuel Storage Cask Approval: Passive Heat Removal	Section 1.1 and Table 2-1 specify a 50-year design life for the system. Tables 4.1-4 and 4.1-5 demonstrate that the system's temperatures are maintained within their allowable limits.
	10 CFR 72.236(g) Specific Requirements for Spent Fuel Storage Cask Approval: Minimum 20-year Lifetime	
	10 CFR 72.236(h) Specific Requirements for Spent Fuel Storage Cask Approval: Wet/Dry Loading and Unloading Compatibility	The operating procedures for the system, presented in Chapter 8, include procedures for wet and dry loading and unloading operations. A discussion is provided for development of dry loading and unloading procedures for dry cask handling facilities.

Table 1.5-1 NUREG-1536 Compliance Matrix (continued)

Chapter 4 – Thermal Evaluation		
Area	**Acceptance Criteria**	**Description of Compliance**
1. Long-term Cladding Temperatures	Fuel cladding (zirconium alloy) temperature at the beginning of dry cask storage should generally be below the allowable temperature of 400°C (752°F) per ISG-11, Rev. 2.	As shown in Tables 4.1-4 and 4.1-5, the fuel cladding temperatures are maintained below allowable temperature limits for zirconium alloy-clad fuel as determined in accordance with ISG 11, Rev. 2.
2. Short Term Cladding Temperatures	Fuel cladding temperature should generally be maintained below 570°C (1058°F) for short-term, off-normal and accident conditions (PNL 4835). For fuel transfer operations (e.g., vacuum drying of the cask or dry transfer), the temperature should generally be maintained below 400°C (752°F). (ISG-11, Rev 2)	As shown in Tables 4.1-4 and 4.1-5, the fuel cladding temperatures are maintained below 570°C (1058°F) for short-term, off-normal and accident conditions. For transfer operations, the fuel cladding temperatures are maintained below 400°C (752°F).
3. Maximum Internal Pressure	The maximum internal pressure of the cask should remain within its design pressures for normal, off-normal, and accident conditions assuming rupture of 1 percent, 10 percent, and 100 percent of the fuel rods, respectively. Assumptions for pressure calculations include release of 100 percent of the fill gas and 30 percent of the significant radioactive gases in the fuel rods.	The maximum normal condition pressure calculation is presented in Section 4.4.5. The accident condition pressure calculation is presented in Section 11.2.1. The off-normal condition is bounded by the accident condition, which assumes 100% failure of the cladding.
4. Maximum Material Temperatures	Cask and fuel materials should be maintained within their minimum and maximum temperature criteria for normal, off-normal, and accident conditions in order to enable components to perform their intended safety functions.	Tables 4.1-4 and 4.1-5 demonstrate that the temperatures are maintained within allowable limits for all components of the system, including the fuel cladding. Therefore, the system is not adversely affected by normal, off-normal, or accident condition events.
5. Fuel Cladding Protection	The spent fuel cladding is the primary structural component that is used to ensure that the spent fuel is contained in a known geometric configuration.	As concluded in ISG-11, Rev. 2, creep under normal conditions of storage will not cause gross rupture of the cladding, and the geometric configuration of the spent fuel will be preserved provided that the maximum cladding temperature does not exceed 400°C (752°F).
6. Long-Term Cladding Damage	Creep is the dominant mechanism for cladding deformation under normal conditions of storage. The relatively high temperatures, differential pressures, and corresponding hoop stress on the cladding will result in permanent creep deformation of the cladding over time.	A temperature limit of 400°C (752°F) for normal conditions of storage and for short-term storage operations will limit cladding hoop stresses and creep and limit the amount of soluble hydrogen available to form radial hydrides. (ISG-11, Rev. 2)
7. Passive Cooling	The cask system should be passively cooled. [10 CFR 72.236(f)]	As stated in Sections 1.2 and 4.1, the system is passively cooled.
8. Thermal Operating Limits	The thermal performance of the cask should be within the allowable design criteria specified in SAR Section 2 (e.g., materials, decay heat specifications) and SAR Section 3 (e.g., thermal stress analysis) for normal, off-normal, and accident conditions.	The thermal stress analyses of the canister and Vertical Concrete Cask for normal conditions are provided in Sections 3.4.4.1.1 and 3.4.4.2.3, respectively. The system is evaluated for off-normal thermal loading in Section 11.1.2, and the system is analyzed for accident thermal loading in Sections 11.2.6, 11.2.7 and 11.2.13.

1.7 References

1. Code of Federal Regulations, "Licensing Requirements for the Independent Storage of Spent Nuclear Fuel and High-Level Radioactive Waste," Part 72, Title 10, January 1996.

2. Nuclear Regulatory Commission, "Standard Review Plan for Dry Cask Storage Systems," NUREG-1536, January 1997.

3. NAC Document No. EA790-SAR-001, "Safety Analysis Report for the UMS® Universal Transport Cask," Docket No. 71-9270, April 1997.

4. Department of Energy, "Multi-Purpose Canister (MPC) Subsystem Design Procurement Specification," Document No. DBG000000-01717-6300-00001, Rev. 6, June 1996.

5. Nuclear Regulatory Commission, "Standard Format and Content for a Topical Safety Analysis Report for a Spent Fuel Dry Concrete Cask," Regulatory Guide 3.61, February 1989.

6. ANSI/ANS-57.9-1992, "Design Criteria for an Independent Spent Fuel Storage Installation (Dry Type)," American Nuclear Society, May 1992.

7. American Concrete Institute, "Building Code Requirements for Structural Concrete," (ACI 318-95) and Commentary (ACI 318R-95), October 1995.

8. ASME Boiler and Pressure Vessel Code, Division I, Section III, Subsection NB, "Class 1 Components," 1995 Edition with 1995 Addenda.

9. ASME Boiler and Pressure Vessel Code, Section V, "Nondestructive Examination," 1995 Edition with 1995 Addenda.

10. ASME Boiler and Pressure Vessel Code, Division I, Section III, Subsection NG, "Core Support Structures," 1995 Edition with 1995 Addenda.

11. Nuclear Regulatory Commission, "Control of Heavy Loads at Nuclear Power Plants," NUREG-0612, July 1980.

12. ANSI N14.6-1993, "American National Standard for Radioactive Materials – Special Lifting Devices for Shipping Containers Weighing 10,000 Pounds (4,500 kg) or More," American National Standards Institute, Inc., June 1993.

13. Code of Federal Regulations, "Packaging and Transportation of Radioactive Materials," Part 71, Title 10, April 1996.

14. ASME Boiler and Pressure Vessel Code, Section IX, "Qualification Standards for Welding and Brazing Procedures, Welders, Brazers, and Welding and Brazing Operators," July 1995.

15. ASME Boiler and Pressure Vessel Code, Section VIII, "Rules for Construction of Pressure Vessels," 1995 Edition with 1995 Addenda.

16. Recommended Practice No. SNT-TC-1A, "Personnel Qualification and Certification in Nondestructive Testing," The American Society for Nondestructive Testing, Inc., edition as invoked by the applicable ASME Code.

17. ANSI N45.2.1, "Cleaning of Fluid Systems and Associated Components During Construction Phase of Nuclear Power Plants."

18. ANSI N45.2.2-1978, "Packaging, Shipping, Receiving, Storage, and Handling of Items for Nuclear Power Plants."

19. American Society for Testing and Materials, "Standard Specification for Ready-Mixed Concrete," ASTM C 94.

20. American Society for Testing and Materials, "Standard Specification for Portland Cement," ASTM C 150.

21. American Society for Testing and Materials, "Standard Specification for Concrete Aggregates," ASTM C 33.

22. American Society for Testing and Materials, "Specification for Aggregates for Radiation-Shielding Concrete," ASTM C 637.

23. American Society for Testing and Materials, "Standard Specification for Chemical Admixtures for Concrete," ASTM C 494.

24. American Society for Testing and Materials, "Specification for Fly Ash and Raw or Calcined Natural Pozzolan for Use as a Mineral Admixture in Portland Cement Concrete," ASTM C 618.

25. American Welding Society, "Structural Welding Code Steel," AWS D1.1-96, 1996.

26. American Society for Testing and Materials, "Standard Practice for Sampling Freshly Mixed Concrete," ASTM C 172.

27. American Society for Testing and Materials, "Method of Making and Curing Concrete Test Specimens in the Field," ASTM C 31.

28. American Society for Testing and Materials, "Standard Test Method for Compressive Strength of Cylindrical Concrete Specimens," ASTM C 39.

29. Nuclear Regulatory Commission, "Cladding Considerations for the Transport and Storage of Spent Fuel," Interim Staff Guidance-11, Revision 2.

THIS PAGE INTENTIONALLY LEFT BLANK

1.8 License Drawings

This section presents the list of License Drawings for the Universal Storage System.

1.8.1 License Drawings for the UMS® Universal Storage System

Drawing Number	Title	Revision No.	No. of Sheets
790-501	Canister/Basket Assembly Table, NAC-UMS®	3	1
790-559	Assembly, Transfer Adapter, NAC-UMS®	7	4
790-560	Assembly, Standard Transfer Cask (TFR), NAC-UMS®	17	7
790-561	Weldment, Structure, Vertical Concrete Cask (VCC), NAC-UMS®	12	4
790-562	Reinforcing Bar and Concrete Placement, Vertical Concrete Cask (VCC), NAC-UMS®	14	7
790-563	Lid, Vertical Concrete Cask (VCC), NAC-UMS®	4	1
790-564	Shield Plug, Vertical Concrete Cask (VCC), NAC-UMS®	7	3
790-565	Nameplate, Vertical Concrete Cask (VCC), NAC-UMS®	4	1
790-570	Fuel Basket Assembly, 56 Element BWR, NAC-UMS®	4	2
790-571	Bottom Weldment, Fuel Basket, 56 Element BWR, NAC-UMS®	3	1
790-572	Top Weldment, Fuel Basket, 56 Element BWR, NAC-UMS®	4	1
790-573	Support Disk and Misc. Basket Details, 56 Element BWR, NAC-UMS®	7	1
790-574	Heat Transfer Disk, Fuel Basket, 56 Element BWR, NAC-UMS®	3	1
790-575	BWR Fuel Tube, NAC-UMS®	10	2
790-581	PWR Fuel Tube, NAC-UMS®	9	2
790-582	Shell Weldment, Canister, NAC-UMS®	11	2
790-583	Assembly, Drain Tube, Canister, NAC-UMS®	7	1
790-584	Details, Canister, NAC-UMS®	18	3
790-585	Transportable Storage Canister (TSC), NAC-UMS®	18	3
790-587	Spacer Shim, Canister, NAC-UMS®	1	1
790-590	Loaded Vertical Concrete Cask (VCC), NAC-UMS®	5	2
790-591	Bottom Weldment, Fuel Basket, 24 Element PWR, NAC-UMS®	6	2

License Drawings
(Continued)

Drawing Number	Title	Revision No.	No. of Sheets
790-592	Top Weldment, Fuel Basket, 24 Element PWR, NAC-UMS®	8	1
790-593	Support Disk and Misc. Basket Details, 24 Element PWR, NAC-UMS®	7	2
790-594	Heat Transfer Disk, Fuel Basket, 24 Element PWR, NAC-UMS®	2	1
790-595	Fuel Basket Assembly, 24 Element PWR, NAC-UMS®	9	2
790-605	BWR Fuel Tube, Over-Sized Fuel, NAC-UMS®	11	2
790-613	Supplemental Shielding, VCC Inlets, NAC-UMS®	2	1
790-617	Door Stop, NAC-UMS®	3	2

1.8.2 Site Specific Spent Fuel License Drawings

Drawing Number	Title	Revision No.	No. of Sheets
412-501	Spent Fuel Can Assembly, Maine Yankee (MY), NAC-UMS®	4	2
412-502	Fuel Can Details, Maine Yankee (MY), NAC-UMS®	5	6

REV	CHANGE
0	INITIAL ISSUE
1	INC. DCR 0A,0B,0C
2	INC. DCR 1A
3	INC. DCR 2A
4	INC. DCR 3A
5	INC. DCR 4A
6	INC. DCR 5A
7	INC. DCR 6A,6B
8	INC. DCR 7A,7B,7C,7D,7E
9	INC. DCR 8A,8B
10	INC. DCR 9A,9B,9C,9D,9E
11	INC. DCR 10A
12	INC. DCR 11A,11B,11C,11D
13	INC. DCR 12A
14	INC DCR 13A,13B
15	INC DCR 14A
16	INC DCR 15A
17	INC DCR 16A,16B

△20 LOCATE AT ASSEMBLY, WITH DOORS CENTERED, FULLY CLOSED AND WITH THE DOWEL PIN IN CONTACT WITH THE TRANSFER CASK BASE/OUTER SHELL. MAINTAIN A .25" MINIMUM OUTER EDGE DISTANCE. DRILL AND REAM FOR PRESS-FIT 1.0 DEEP INTO ITEM 29.

△19 GRIND TRANSITION CHAMFERS ON THE LEADING AND TRAILING EDGES OF THE 2.3" X 2.0" SHOULDER 1/8" X 30-45 DEGREES.

△18 GRIND TRANSITION CHAMFERS ON THE LEADING AND TRAILING EDGES OF THE TRANSFER CASK DOOR RAIL (ITEM 16) 1/8" X 30-45 DEGREES.

17. COMMERCIAL GRADE LEAD WOOL MAY BE USED TO FILL OPEN SPACES AT THE TRUNNIONS AS BEST POSSIBLE.

△16 CONTROL OVERALL HEIGHT AS SHOWN. PLACE A ROW OF FLAT BOTTOM BRICKS IN THE CAVITY FIRST AND A ROW OF BRICKS WITH FLAT TOPS IN THE CAVITY AS THE LAST ROW.

△15 STEEL STAMP/ENGRAVE AS SHOWN WITH 2.0 HIGH LETTERS APPROXIMATELY .03 DEEP AND FILL WITH BLACK WEATHER RESISTANT PAINT. IF ITEM 21 COMPONENTS ARE USED, CHANGE TEXT TO READ "ADVANCED TRANSFER CASK", AND ADD TEXT TO NOTE "MAX. ALLOWABLE CANISTER WEIGHT: 98,000 LBS.". ACTUAL ASSEMBLED WEIGHT TO BE INSERTED IN PLACE OF XX,XXX AT TIME OF FABRICATION. ALTERNATIVELY, INFORMATION MAY BE STEEL STAMPED/ENGRAVED ONTO ITEM 25 AND SEAL WELDED ALL AROUND TO THE OUTER SHELL.

△14 MACHINE ID OF ITEM 43, SHIELDING RING, FOR SLIP FIT W/INNER SHELL. MACHINE THICKNESS TO ALLOW FOR UP TO .3 OF CRUSH IN LEAD AND PRESS UNTIL FLUSH WITH TOP OF INNER SHELL PRIOR TO WELDING. MACHINE OD TO 77.1. ITEM 43 MAY BE USED AS THE BACKING BAR FOR UPPER, INNER SHELL WELD.

△13 FOR 92 ASSEMBLY, FASTEN ITEM 41, TRANSFER CASK EXT. TO CASK USING ITEM 42, TRANSFER ADAPTER SHCS. BOLT ITEM 20, RETAINING RING, TO TRANSFER ADAPTER USING ITEM 38, RETAINING RING BOLT.

△12 1/4" MAX GAP AT THE TOP OF NEUTRON SHIELDING. NEUTRON SHIELD TO CONTAIN 0.6 WEIGHT PERCENT B_4C MIN.

11. DELETED

△10 MATCH DRILL LOCATIONS FROM ITEM 20. TAP 3/4-10 UNC-2B X 1.5 DEEP.

△9 TYPICAL FOR SEAM AND GIRTH WELDS, NUMBER AND LOCATION OPTIONAL. SEAM WELDS SHALL BE OFFSET.

8. THE MATING SURFACES BETWEEN THE DOOR RAILS AND THE SHIELD DOORS SHALL BE COATED WITH A SPENT FUEL POOL COMPATIBLE LUBRICANT, SUCH AS NEOLUBE.

7. REMOVE ANY OIL AND/OR GREASE FROM ALL SURFACES IN ACCORDANCE WITH SSPC-SP 1. COMMERCIAL BLAST CLEAN PER SSPC-SP 10. APPLY CARBOLINE 890 OR KEELER & LONG E-SERIES EPOXY ENAMEL COATING PER MANUFACTURERS APPLICATION INSTRUCTIONS.

△6 TRANSFER DRILL LOCATIONS FOR ITEM 19, DOOR LOCK BOLTS, IN ITEMS 17 AND 18, SHIELD DOORS.

5. THE TRUNNIONS (ITEM 12) SHALL BE COAXIAL TO EACH OTHER WITHIN .100.

4. THE TRUNNIONS (ITEM 12) SHALL BE FLUSH WITH THE INSIDE DIAMETER OF THE INNER SHELL (ITEMS 2, 3, 4, 5 OR 6).

3. BACKING BARS ARE OPTIONAL.

2. VISUALLY INSPECT (VT) ALL WELDS IN ACCORDANCE WITH ASME SECTION V, ARTICLE 9. ACCEPTANCE PER ASME SECTION III, NG-5360. AFTER LOAD TESTING, MAG. PARTICLE TEST (MT) ALL ACCESSIBLE LOAD BEARING WELDS IN ACCORDANCE WITH ASME SECTION V, ARTICLE 7. ACCEPTANCE PER ASME SECTION III, NF-5340.

1. ALL WELDING PROCEDURES AND QUALIFICATIONS TO BE IN ACCORDANCE WITH AWS D1.1 OR ASME SECT. IX.

NOTES:

⑰ △28 ITEMS 49, 50, 51 AND 52 ARE OPTIONAL COMPONENTS.

27. AT THE OPTION OF THE USER, THE DOWEL PINS (ITEM 46) MAY BE REMOVED AND THE DRILLED HOLES WELDED CLOSED. THE WELDING OPERATION SHALL BE DOCUMENTED AS A WELD REPAIR TO THE SHIELD DOORS (ITEMS 17 AND 18).

26. AT THE OPTION OF THE USER, THE DOWEL PINS (ITEM 46) MAY BE SEAL WELDED TO THE SHIELD DOORS (ITEMS 17 AND 18).

△25 ENDS OF ITEM 16 DOOR RAIL MAY BE SEAL WELDED TO ITEM 1 BASE PLATE.

24. FOR INNER AND OUTER SHELL (ITEMS 2-6, 7-11) AREAS ADJACENT TO SEAM, GIRTH, TOP PLATE (ITEM 15) AND BASE PLATE (ITEM 1) WELDS, AN ADDITIONAL .015" BELOW ASTM MATERIAL SPECIFICATION MINIMUM IS ALLOWED. AREAS ADJACENT TO THE TRUNNION WELDS SHALL MEET THE ASTM MATERIAL SPECIFICATION.

△23 AT THE USERS OPTION EITHER: FOUR (4) OF ITEM 19, OR TWO (2) OF ITEM 47 (ONE (1) IN EACH DOOR) OR TWO (2) OF ITEM 48 (ONE (1) FOR EACH DOOR) SHALL BE USED. IF ITEMS 19 AND 47 ARE NOT INVOKED OPTIONS, THE HOLES FOR THEIR IMPLEMENTATION MAY BE OMITTED.

△22 STAMP/ENGRAVE HEAD OF BOLT TO INDICATE 17-4 PH MATERIAL.

△21 IF ITEM 21 COMPONENTS ARE INSTALLED, THE MAXIMUM CANISTER ALLOWABLE WEIGHT IS 98,000 LBS. IF ITEM 21 COMPONENTS ARE NOT INSTALLED, THE MAXIMUM CANISTER ALLOWABLE WEIGHT IS 88,000 LBS.

NOTE	91 ASSY	92 ASSY	93 ASSY	94 ASSY	95 ASSY	96 ASSY	97 ASSY	98 ASSY	99 ASSY	ITEM	NAME	MATERIAL	SPEC	DRAWING No.	DESCRIPTION
⑰ △28		A/R	A/R							52	LIFT PLATE B	CARBON STEEL	COML		PLATE/BAR
⑰ △28		A/R	A/R							51	LIFT PLATE A	CARBON STEEL	COML		PLATE/BAR
⑰ △28		A/R	A/R							50	DOOR PLUG	ST. STL.	COML		PLATE/BAR
⑰ △28					A/R	A/R	A/R	A/R	A/R	49	WEAR STRIP	NITRONIC 30	COML		SHEET/STRIP
△23					2	2	2	2	2	48	DOOR STOP			790-617-99	
△22 △23					A/R	A/R	A/R	A/R	A/R	47	DOOR LOCK BOLT	17-4 PH	ASTM A564		BAR
△20					4	4	4	4	4	46	DOWEL PIN	ST. STL.	COML		DIA 5/8 X 2 LG.
	1									45	FILL/DRAIN LINE PIPE	304 ST. STL.	ASTM A312		1 IN. SCH 40 PIPE
	1									44	FILL/DRAIN LINE PLATE	304 ST. STL.	ASTM A240		11 GAUGE SHEET
					1	1	1	1	1	43	SHIELDING RING	CARBON STEEL	ASTM A36/A105/A516 GR.70		PLATE
		32								42	TRANSFER ADAPTER SHCS	HIGH ALLOY STEEL	ASTM A193 GR. B6		3/4-10 UNC-3A 9.0 LG
		1								41	TRANSFER CASK EXTENSION	CARBON STEEL	ASTM A516 GR. 70		PLATE
		1								40	ASSEMBLY, TRANSFER CASK			790-560-99	
			1	1						39	CONNECTOR	LOW ALLOY STEEL	ASTM A588		4 PLATE
					32	32	32	32	32	38	RETAINING RING BOLT	HIGH ALLOY STEEL	ASTM A193 GR. B6		3/4-10 UNC-2A 2.0 LG
					4	4	4	4	4	37	SCUFF PLATE	304 ST. STL.	ASTM A240		11 GAUGE SHEET
△16					3760	3720	3640	3600	3440	36	GAMMA SHIELD BRICK	LEAD (PB)	ASTM B29		CHEMICAL COPPER GRADE
					10	10	10	10	10	35	FILL/DRAIN LINE			790-560-91	
			1							34	NS COVER PLATE B	LOW ALLOY STEEL	ASTM A588		1/2 PLATE
				1						33	NS COVER PLATE A	LOW ALLOY STEEL	ASTM A588		1/2 PLATE
			2							32	NS BOUNDARY	LOW ALLOY STEEL	ASTM A588		1 1/2 X 2 RECT. BAR
				2						31	NS BOUNDARY	LOW ALLOY STEEL	ASTM A588		1 1/2 X 2 RECT. BAR
			1	1						30	NS BOUNDARY	LOW ALLOY STEEL	ASTM A588		1 1/2 X 2 RECT. BAR
			2	2						29	NS BOUNDARY	LOW ALLOY STEEL	ASTM A588		1 1/2 X 2 RECT. BAR
			1	1						28	NS BOUNDARY	LOW ALLOY STEEL	ASTM A588		1 X 2 RECT. BAR
			1							27	BOTTOM PLATE B	LOW ALLOY STEEL	A350 LF2		PLATE
				1						26	BOTTOM PLATE A	LOW ALLOY STEEL	A350 LF2		PLATE
△15					1	1	1	1	1	25	NAMEPLATE	ST. STL.	COML		11-16 GAUGE SHEET
					A/R	A/R	A/R	A/R	A/R	24	PAINT		COML		SEE NOTE 15
					A/R	A/R	A/R	A/R	A/R	23	LEAD WOOL	Pb	COML		SEE NOTE 17
					A/R	A/R	A/R	A/R	A/R	22	COATING SYSTEM		COML		SEE NOTE 7
△21					4	4	4	4	4	21	SUPPORT PLATE	LOW ALLOY STEEL	ASTM A588		3/4 PLATE
					1	1	1	1	1	20	RETAINING RING	LOW ALLOY STEEL	ASTM A588		3/4 PLATE
△23					A/R	A/R	A/R	A/R	A/R	19	DOOR LOCK BOLT	304 ST. STL.	ASTM A276		1 1/8 HEX BAR
△6					1	1	1	1	1	18	SHIELD DOOR B			790-560-93	
△6					1	1	1	1	1	17	SHIELD DOOR A			790-560-94	
					2	2	2	2	2	16	DOOR RAIL	LOW ALLOY STEEL	A350 LF2		BAR
					1	1	1	1	1	15	TOP PLATE	LOW ALLOY STEEL	ASTM A588		PLATE
△12			A/R	A/R	A/R	A/R	A/R	A/R	A/R	14	NEUTRON SHIELD	NS-4-FR	COML		
					4	4	4	4	4	13	TRUNNION CAP	LOW ALLOY STEEL	ASTM A588		3/8 PLATE
					4	4	4	4	4	12	TRUNNION	LOW ALLOY STEEL	A350 LF2		ROUND BAR
					1					11	OUTER SHELL	LOW ALLOY STEEL	ASTM A588		1 1/4 PLATE
						1				10	OUTER SHELL	LOW ALLOY STEEL	ASTM A588		1 1/4 PLATE
							1			9	OUTER SHELL	LOW ALLOY STEEL	ASTM A588		1 1/4 PLATE
								1		8	OUTER SHELL	LOW ALLOY STEEL	ASTM A588		1 1/4 PLATE
									1	7	OUTER SHELL	LOW ALLOY STEEL	ASTM A588		1 1/4 PLATE
					1					6	INNER SHELL	LOW ALLOY STEEL	ASTM A588		3/4 PLATE
						1				5	INNER SHELL	LOW ALLOY STEEL	ASTM A588		3/4 PLATE
							1			4	INNER SHELL	LOW ALLOY STEEL	ASTM A588		3/4 PLATE
								1		3	INNER SHELL	LOW ALLOY STEEL	ASTM A588		3/4 PLATE
									1	2	INNER SHELL	LOW ALLOY STEEL	ASTM A588		3/4 PLATE
					1	1	1	1	1	1	BOTTOM PLATE	LOW ALLOY STEEL	ASTM A588		1 PLATE

QUANTITY

UNLESS OTHERWISE STATED
DIMENSIONING AND TOLERANCING SHALL BE PER ASME Y14.5M-94. UNSPECIFIED DIMENSIONAL TOLERANCES ARE SHOWN BELOW.
ALL THREAD DEPTH CALLOUTS ARE TO BE CONSIDERED AS A MIN. DEPTH OF PERFECT THREADS. THE ACTUAL DEPTH OF THE THREADS IS NOT SUBJECT TO TOLERANCE CONTROLS.

UNDER 3	±.003	WEIGHTS ARE APPROXIMATE AND ARE TO BE USED FOR HANDLING PURPOSES ONLY
3-12	±.006	ALL DIMENSIONS ARE IN INCHES
OVER 12	±.010	BORDER SIZE: F (40 X 28)
UNDER 6	±.02	ALL UNSPECIFIED TOOL RADII .015 - .030
6-18	±.03	BREAK ALL SHARP CORNERS .015 - .030
OVER 18	±.06	MACHINED SURFACES TO BE ▽ OR BETTER
ALL	±.1	NEXT ASSEMBLY: N/A
FRACTIONAL ±1/8		
ANGLES ±0.5°		DRAWING TYPE: LICENSE

GROUP	NAME	DATE
PREPARER	R. Walker	10-25-04
CHECKER	[signature]	10-25-04
PROJECT MANAGER	JR [signature]	10-27-04
ENGINEERING	[signature]	10/29/04
LICENSING	[signature]	11/02/04
QUALITY	[signature] RHS	11/03/04

NAC INTERNATIONAL

ASSEMBLY, STANDARD
TRANSFER CASK (TFR)
NAC-UMS®

PROJECT 790 | DRAWING 560 | REV 17
SCALE 1/1 | WEIGHT NOTED | SH 1 OF 7 | 10-22-2004

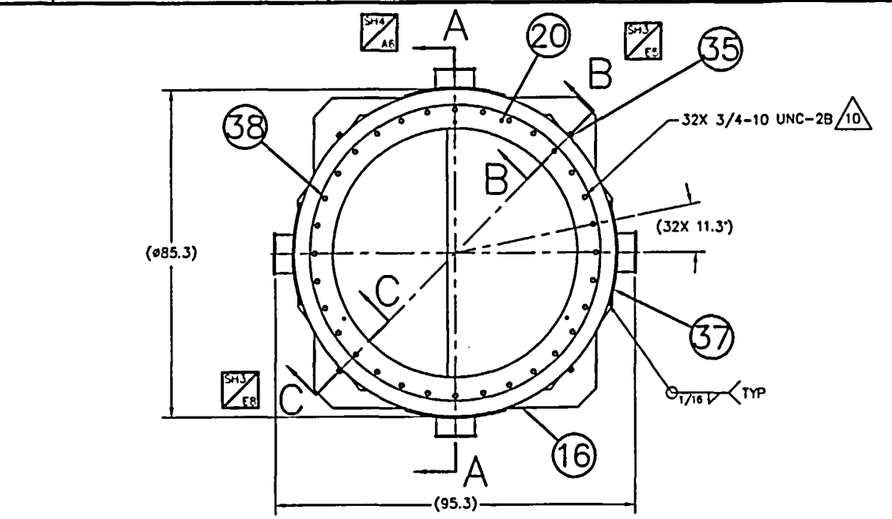

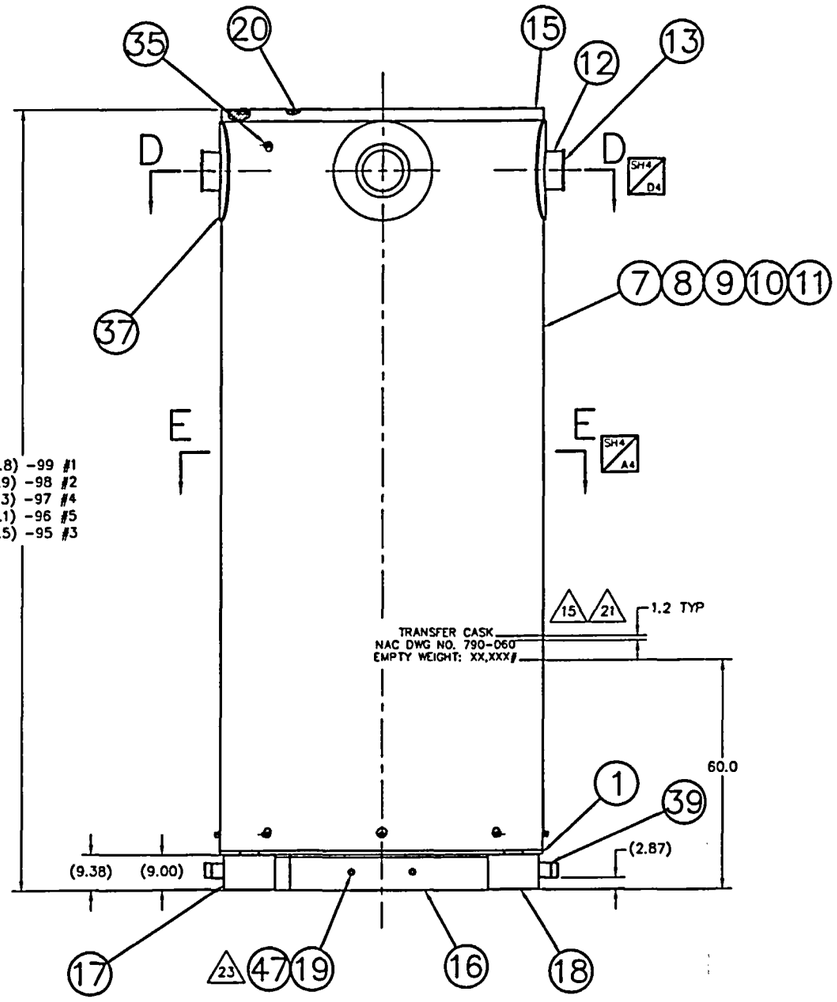

99 TRANSFER CASK
WEIGHT: 112,000#

98 TRANSFER CASK
WEIGHT: 117,000#

97 TRANSFER CASK
WEIGHT: 117,800#

96 TRANSFER CASK
WEIGHT: 120,400#

95 TRANSFER CASK
WEIGHT: 121,200#

NAC INTERNATIONAL

ASSEMBLY, STANDARD
TRANSFER CASK (TFR)
NAC-UMS®

PROJECT	DRAWING	REV
790	560	17
SCALE 1/15	EST.WT. NOTED	SH 2 OF 7

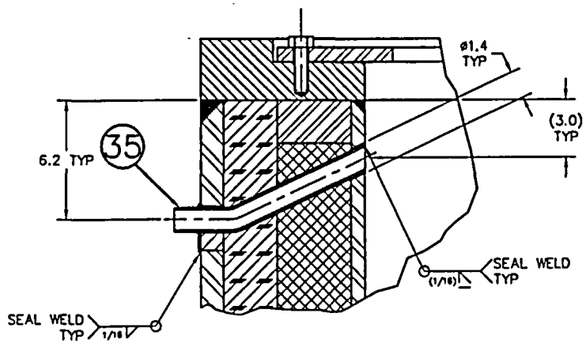

SH2/E7 **SECTION C–C**
SCALE: 1/3
TYPICAL 2X 45°

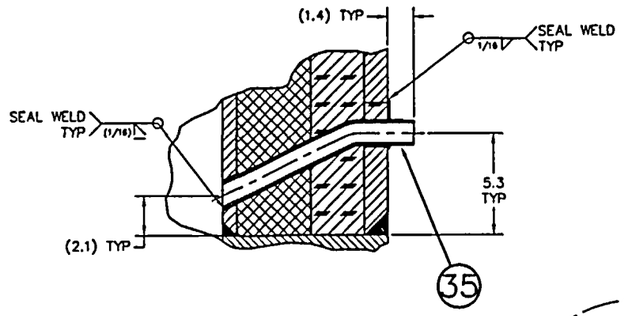

SH2/F5 **SECTION B–B**
SCALE: 1/3
TYPICAL 8X 45°

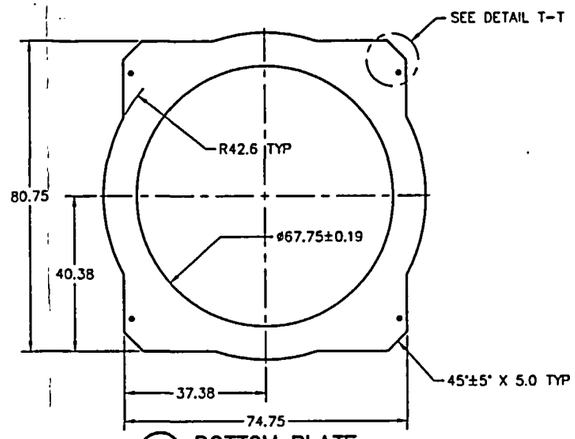

1 **BOTTOM PLATE**

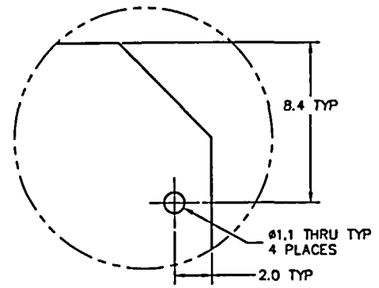

23 **DETAIL T–T**
(ALTERNATE FABRICATION)
SCALE: 1/3

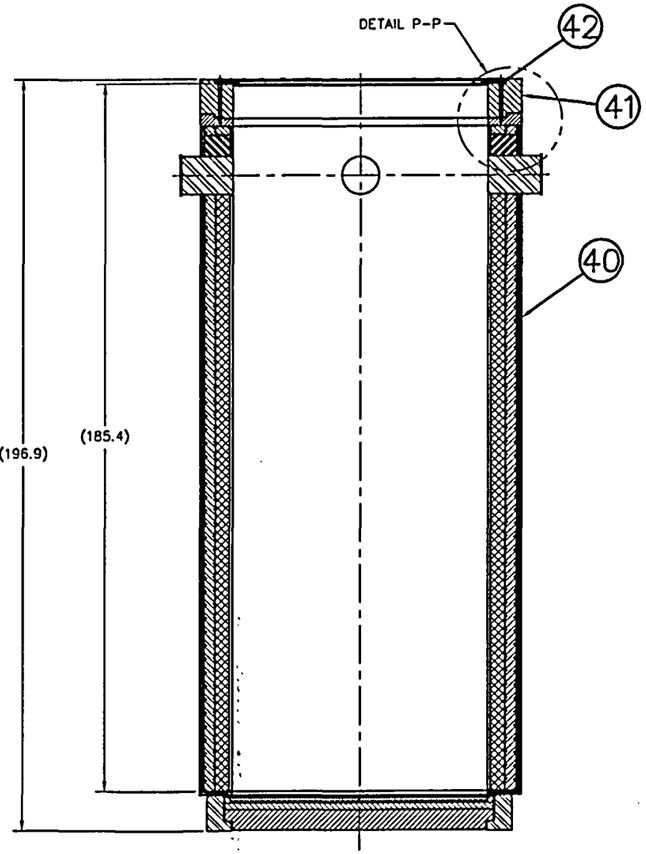

13 92 **TRANSFER CASK**
(SECTION VIEW)

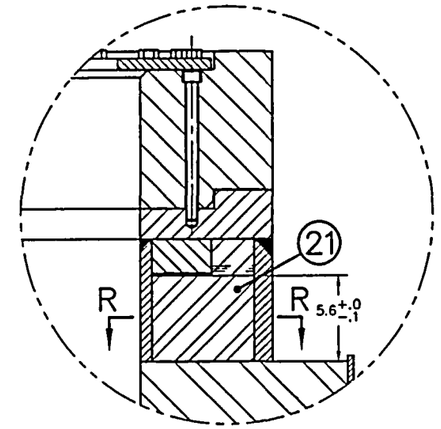

DETAIL P–P
21 SCALE: 1/4
(ADVANCED CONFIGURATION)

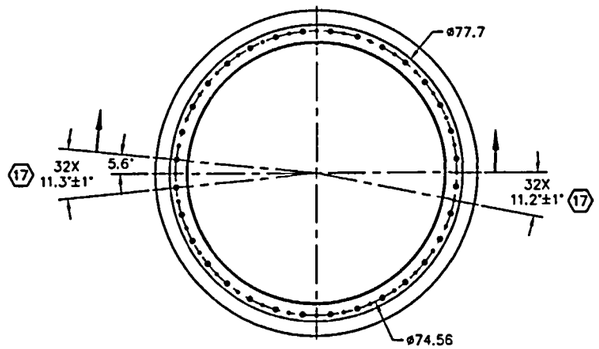

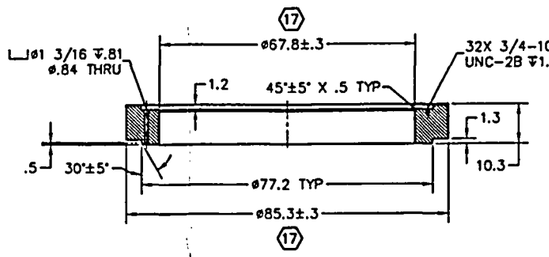

41 **TRANSFER CASK EXTENSION**

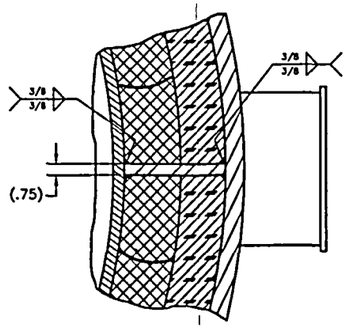

21 **SECTION R–R**
SCALE: 1/4
(ADVANCED CONFIGURATION)

NAC INTERNATIONAL

ASSEMBLY, STANDARD
TRANSFER CASK (TFR)
NAC-UMS®

PROJECT	790	DRAWING	560	REV 17
SCALE 1/15	EST.WT. NOTED	SH 3 OF 7		8.27xx 9-1-2006

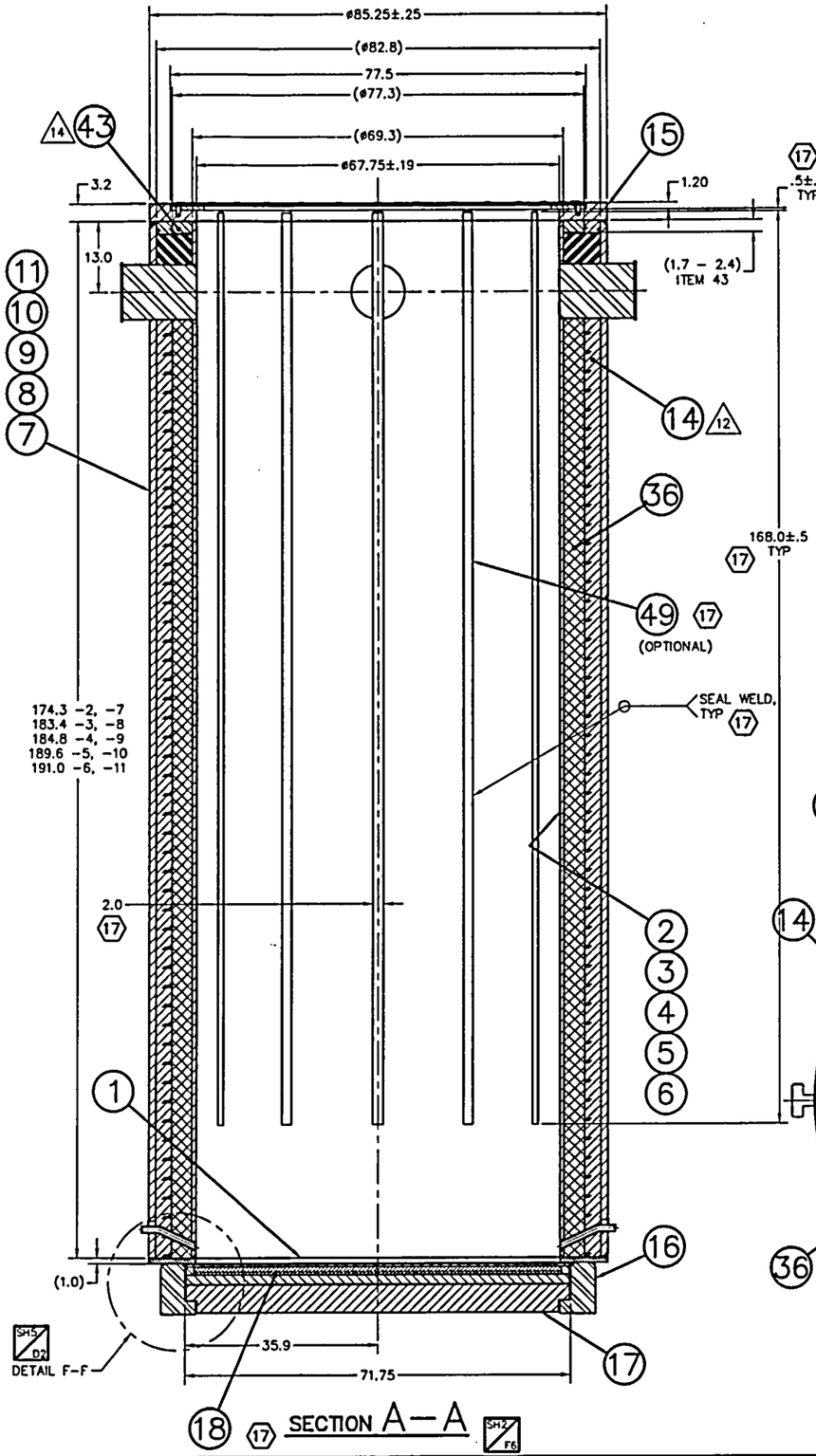

SECTION A–A

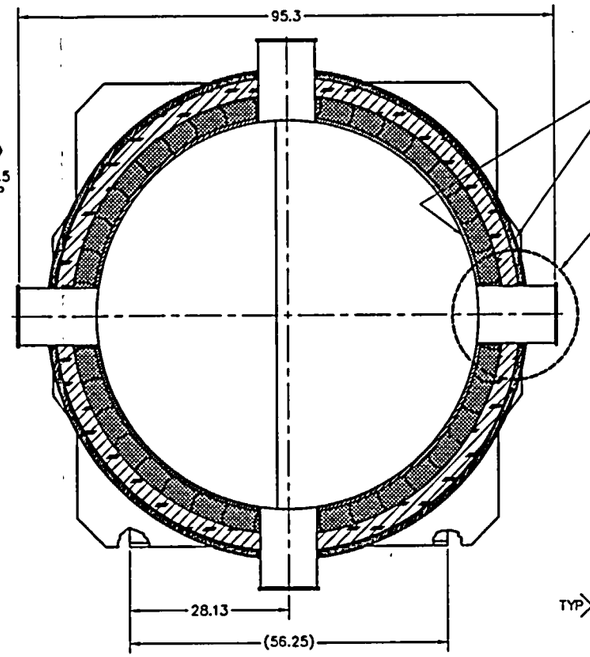

SECTION D–D

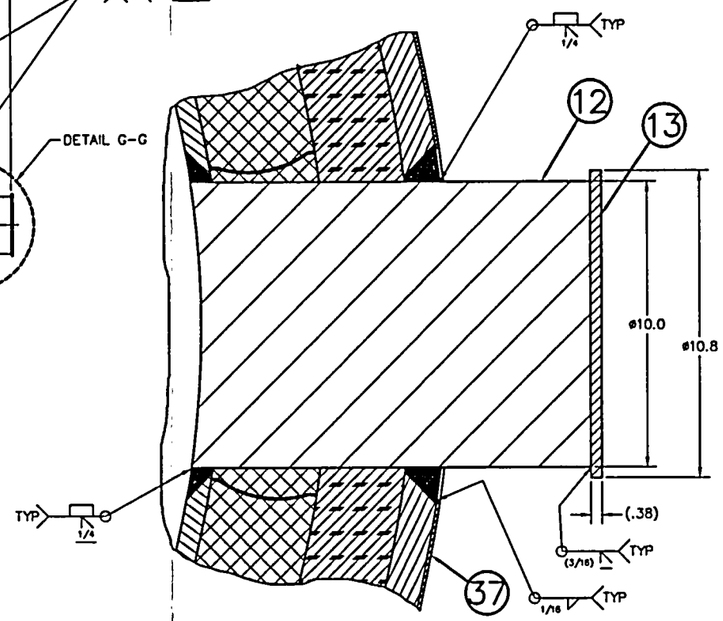

DETAIL G–G
SCALE: 1/2

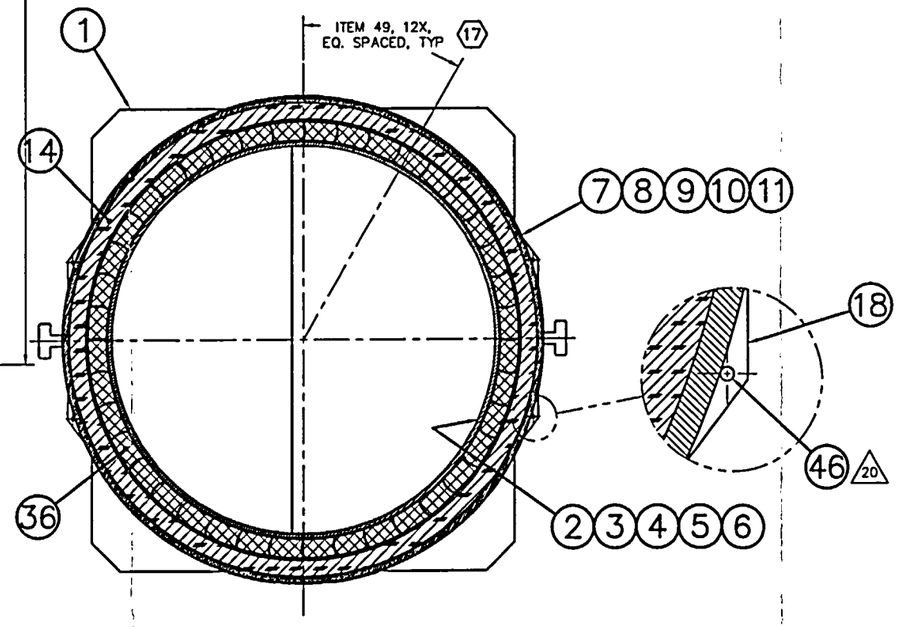

SECTION E–E

NAC INTERNATIONAL

ASSEMBLY, STANDARD
TRANSFER CASK (TFR)
NAC-UMS®

PROJECT	DRAWING	REV
790	560	17
SCALE 1/10	EST. WT. NOTED	SH 4 OF 7

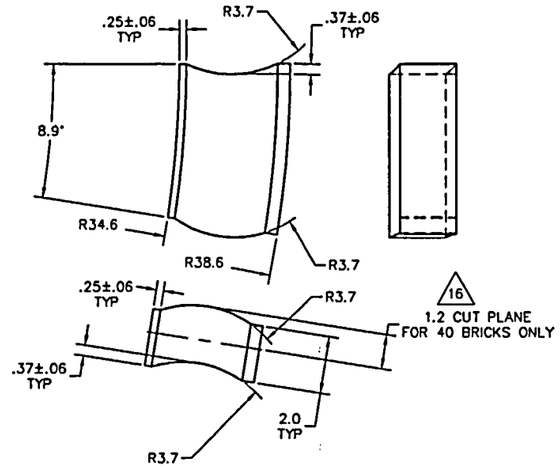

36 GAMMA SHIELD BRICK
SCALE: 1/2

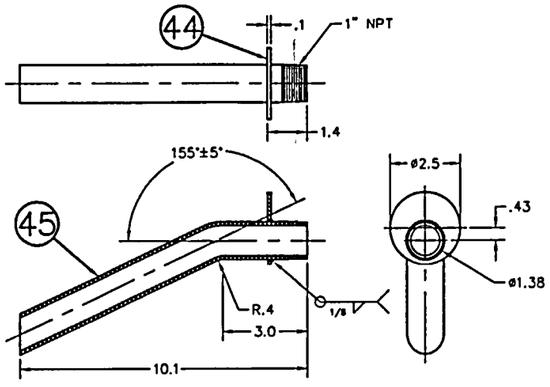

91 FILL/DRAIN LINE
SCALE: 1/2

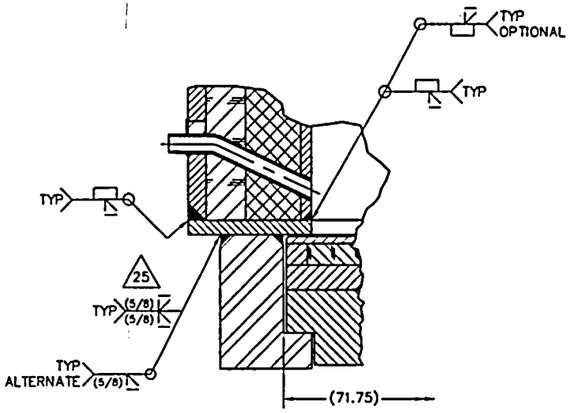

DETAIL F—F
SCALE: 1/4

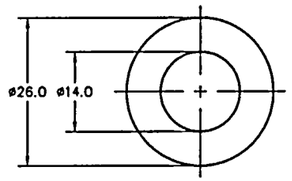

37 SCUFF PLATE
SCALE: 1/10

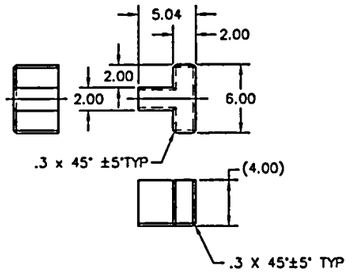

39 CONNECTOR
SCALE: 1/5

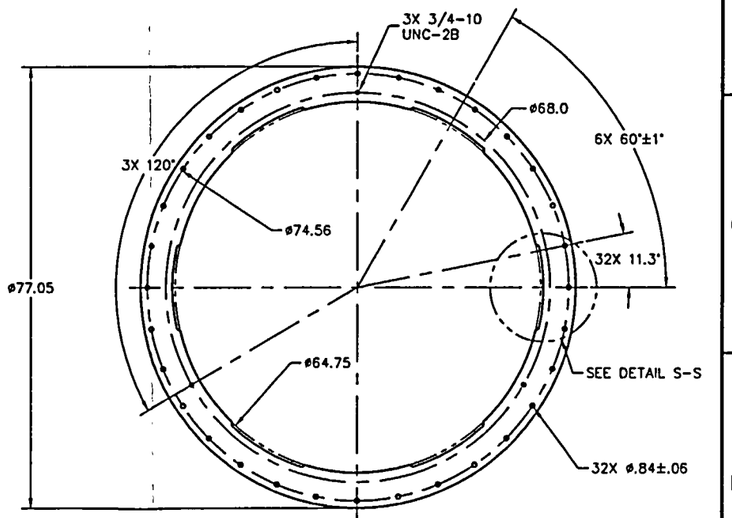

20 RETAINING RING

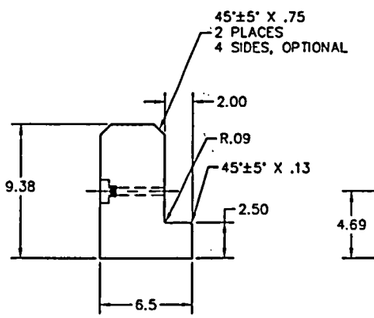

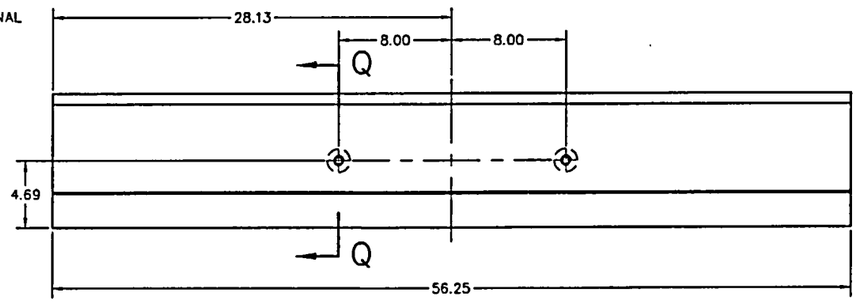

18 16 DOOR RAIL
SCALE: 1/4

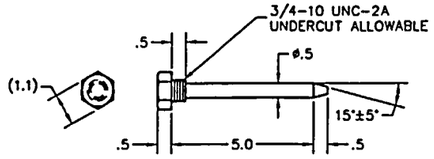

23 19 DOOR LOCK BOLT
SCALE: 1/2

22 23 47 DOOR LOCK BOLT
SCALE: 1/2

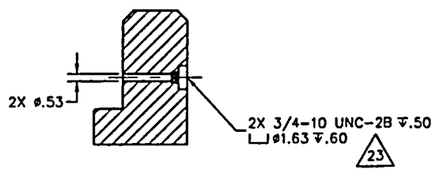

SECTION Q—Q

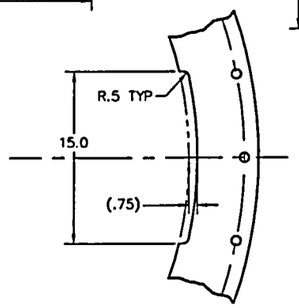

DETAIL S—S
SCALE: 1/5

NAC INTERNATIONAL

ASSEMBLY, STANDARD
TRANSFER CASK (TFR)
NAC-UMS®

PROJECT	790	DRAWING	560	REV 17
SCALE 1/10	EST.WT. NOTED	SH 5 OF 7		

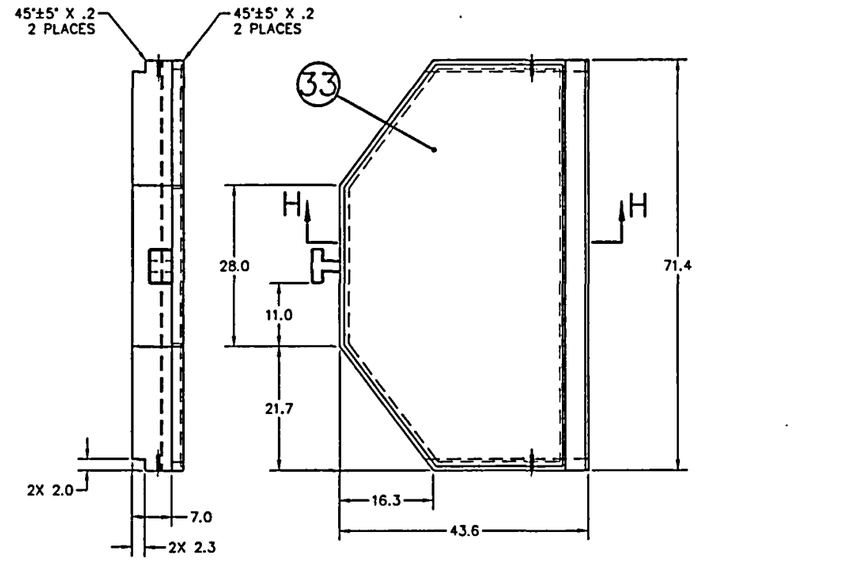

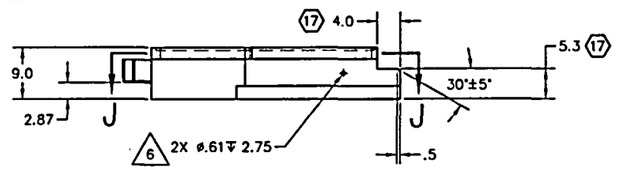

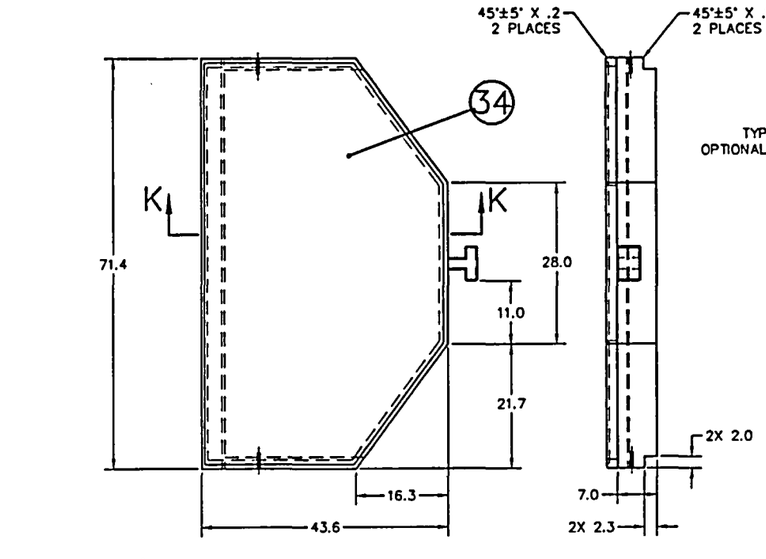

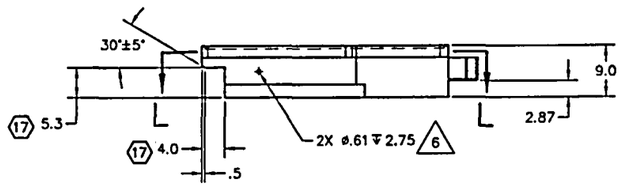

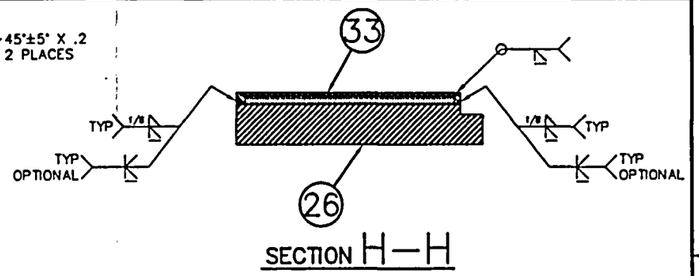

SECTION H—H

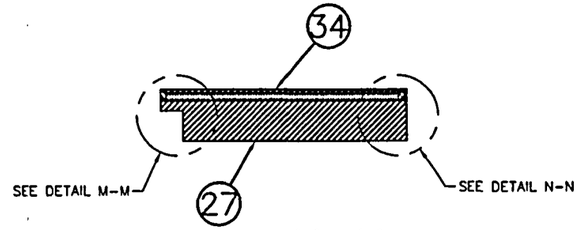

SECTION K—K

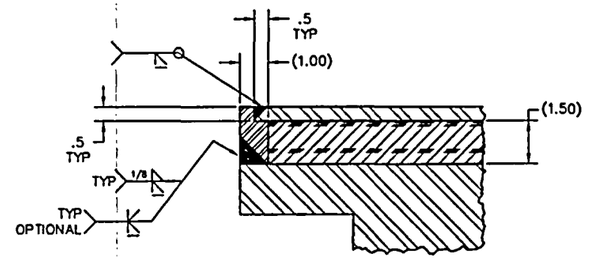

DETAIL M—M
SCALE: 1/2

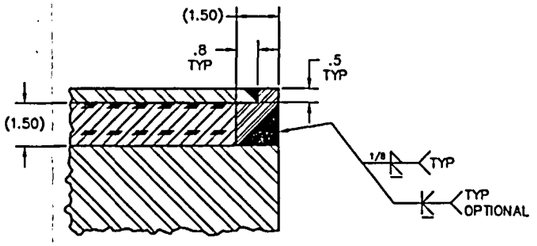

DETAIL N—N
SCALE: 1/2

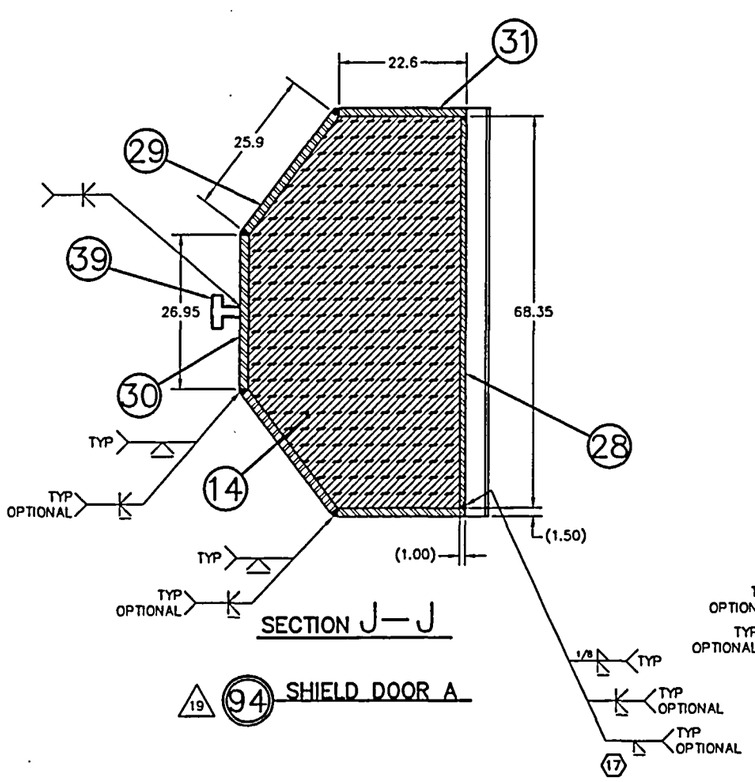

SECTION J—J

19 94 SHIELD DOOR A

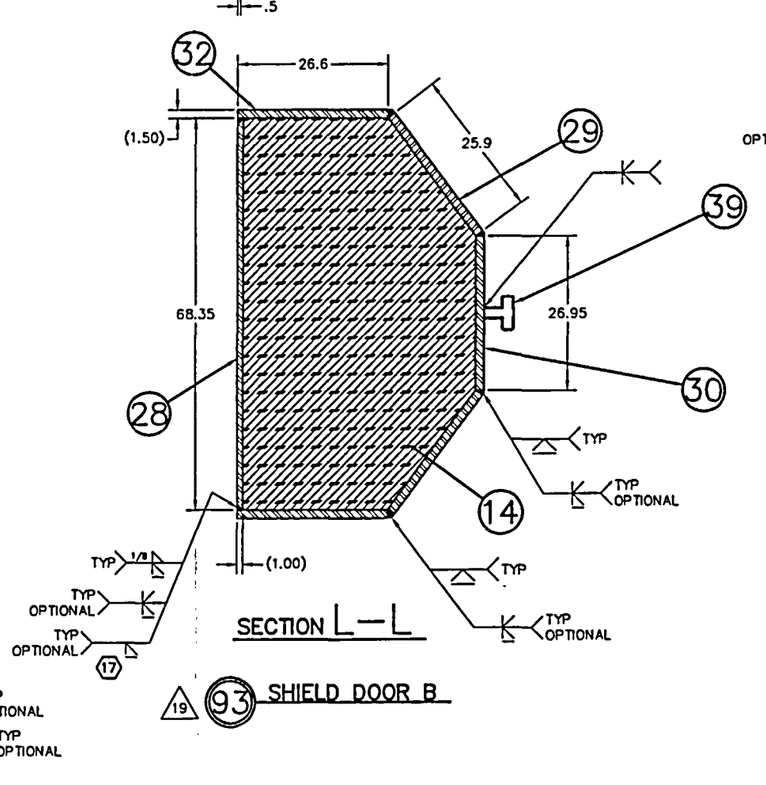

SECTION L—L

19 93 SHIELD DOOR B

NAC INTERNATIONAL

ASSEMBLY, STANDARD
TRANSFER CASK (TFR)
NAC-UMS®

PROJECT	790	DRAWING	560	REV 17
SCALE 1/10	EST.WT. NOTED	SH 6 OF 7		

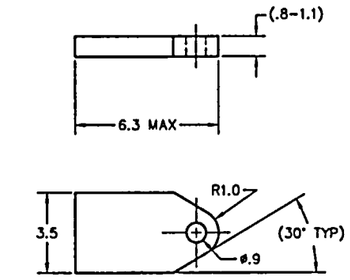

(17) (51) LIFT PLATE A (OPTIONAL)

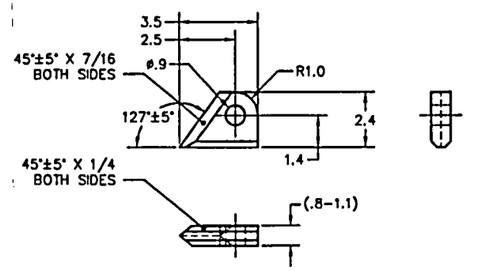

(17) (52) LIFT PLATE B (OPTIONAL)

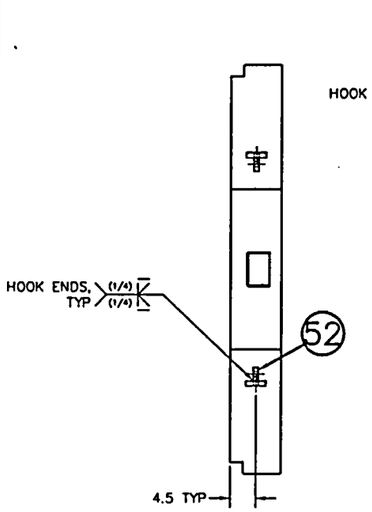

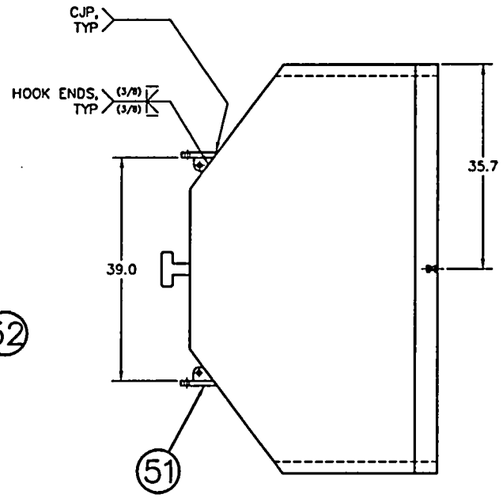

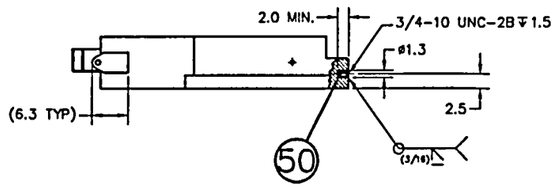

(17) (94) SHIELD DOOR A (OPTIONAL MODIFICATIONS)

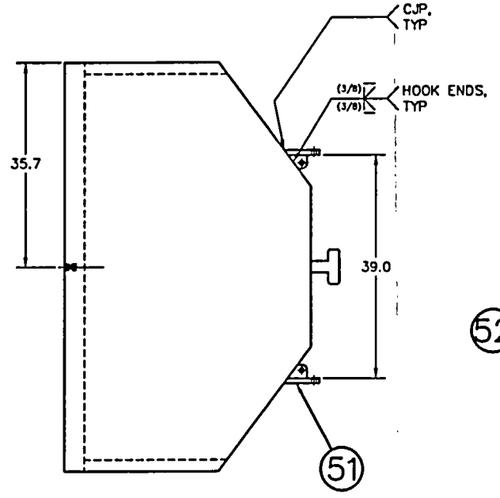

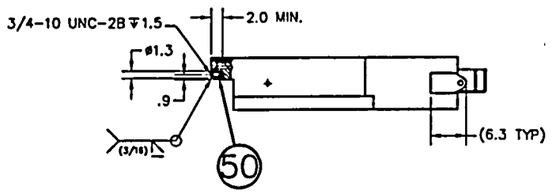

(17) (93) SHIELD DOOR B (OPTIONAL MODIFICATIONS)

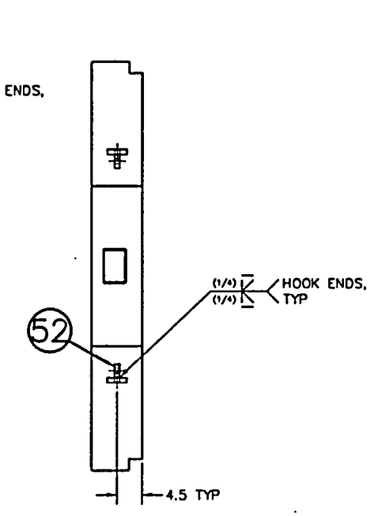

NAC INTERNATIONAL

ASSEMBLY, STANDARD
TRANSFER CASK (TFR)
NAC-UMS®

PROJECT	DRAWING	REV
790	560	17
SCALE 1/10	WEIGHT NOTED	SH 7 OF 7

REV	CHANGE
0	INITIAL ISSUE
1	INC DCR 0A
2	INC DCR 1A
3	INC DCR 2A
4	INC DCR 3A
5	INC DCR 4A
6	INC DCR 5A,5C,5D,5E
7	INC DCR 6A
8	INC DCR 7A,7B,7C,7D
9	INC DCR 8A
10	INC DCR 9A,9B,9C,9D
11	INC DCR 10A,10B,10C,10D,10E
12	INC DCR 11A

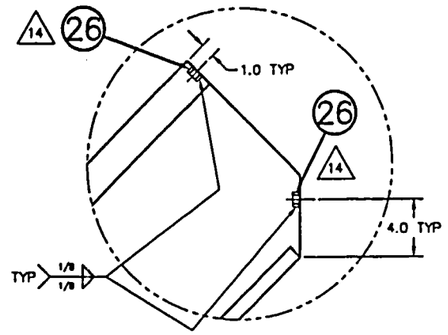

(12) DETAIL E–E SH3/D5

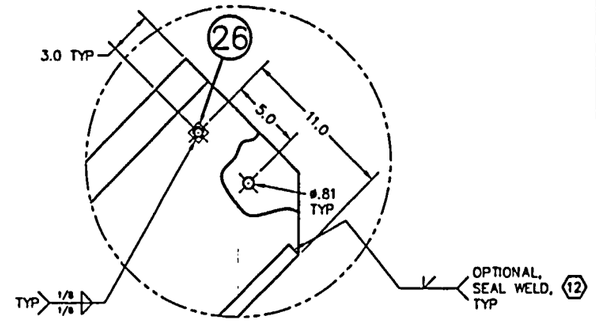

DETAIL E–E SH3/D5

OPTIONAL CONFIGURATION
(NUTS ARE LOCATED ON CONCRETE SIDE/OUTSIDE OF INLET TUNNEL)

(17) ITEM# 12, MAY BE FABRICATED FROM MULTIPLE PLATES. SEAM(S) BETWEEN PLATE SECTIONS MUST BE FULL PENETRATION WELDED.

(16) PIPE, TUBING OR SOLID BAR MAY BE USED FOR BOM ITEM 35. PIPE SHOULD BE ASTM A53, GR. B/ASTM A106, GR. B, 3 1/2 NOMINAL DIA., XXH. TUBE SHOULD BE ASTM A519, 4" X 5/8" WALL. SOLID BAR SHOULD BE 4" DIA., ASTM A36.

(15) TOP FLANGE, MAY BE ROTATED 45° AT THE OPTION OF THE USER/FABRICATOR TO LOCATE 2X 1-1/2 HOLES ON SAME AXIS AS TWO OPPOSING LOWER INLET VENT CENTERLINES.

(14) ALTERNATE DESIGN ELIMINATES NUTS, BILL OF MATERIAL ITEM 26.,

(13) AT FABRICATOR OPTION, DELETE DETAIL C-C AND CORRESPONDING BILL OF MATERIAL ITEMS 4, 5, 6, 7, AND 8.

(12) SHIM PLATES MAY BE UTILIZED TO FACILITATE FIELD WELDING OPERATIONS ON ONE OR BOTH SIDES OF THE SUPPLEMENTAL SHIELDING WELDMENT. LOCATE WELDS APPROX. AS SHOWN.

(11) DELETED

(10) DELETED

(9) LOCATE FACE OF ITEM 26 FLUSH WITH 68" RADIUS PROFILE.

(8) BAFFLE WELDMENT MAY BE FABRICATED USING MULTIPLE SECTIONS. ALL SEAMS BETWEEN SECTIONS MUST BE FULL PENETRATION WELDED UPON ASSEMBLY.

(6) ITEMS MAY BE FABRICATED USING MULTIPLE SECTIONS. ALL SEAMS BETWEEN SECTIONS MUST BE SEAL WELDED UPON ASSEMBLY.

(5) ALTERNATE FABRICATION FOR ITEMS 22/24 AND 18/23, MULTIPLE COMPONENTS MAY BE FORMED FROM ONE PIECE OF PLATE. 1 X THICKNESS MIN. I.D. BEND RADIUS.

(4) TYPICAL FOR SEAM AND GIRTH WELDS, NUMBER AND LOCATION OPTIONAL. ADJACENT SECTIONS WITH SEAM WELDS SHALL BE OFFSET.

3. PREPARE ALL SURFACES IN ACCORDANCE W/ SSPC-SP1. COMMERCIAL BLAST CLEAN PER SSPC-SP6. APPLY KEELER & LONG KOLOR-POXY PRIMER No. 3200 TO ALL SURFACES PER MANUFACTURERS APPLICATION INSTRUCTIONS. APPLY ACRYTHANE ENAMEL Y-1-SERIES TOP COATING PER MANUFACTURERS APPLICATION INSTRUCTIONS ON ALL SURFACES THAT WILL NOT BE COMPLETELY SHIELDED FROM THE ELEMENTS BY CONCRETE.

2. VISUAL (VT) INSPECT ALL WELDS.

1. ALL WELDING PROCEDURES AND QUALIFICATIONS TO BE IN ACCORDANCE WITH AWS D1.1 OR ASME SECTION IX.

NOTES:

92 ASSY	93 ASSY	94 ASSY	95 ASSY	96 ASSY	97 ASSY	98 ASSY	99 ASSY	ITEM	NAME	MATERIAL	SPEC	DRAWING No.	DESCRIPTION
		16						35	PIPE/TUBE/BAR (OPTIONAL)	CARBON STEEL	SEE NOTE 16		SEE NOTE 16
		4						34	SUPPLEMENTAL SHIELDING			790-613-99	
								33	DELETED				
A/R	A/R	A/R	A/R	A/R	A/R	A/R	A/R	32	COATINGS		COML		SEE NOTE 3
	2							31	LIFTING NUT	CARBON STEEL	COML		1-8 UNC-2B HEAVY HEX NUT
			1					30	SHELL	CARBON STEEL	ASTM A36		2 1/2 PLATE
				1				29	SHELL	CARBON STEEL	ASTM A36		2 1/2 PLATE
					1			28	SHELL	CARBON STEEL	ASTM A36		2 1/2 PLATE
						1		27	SHELL	CARBON STEEL	ASTM A36		2 1/2 PLATE
	2	16						26	SCREEN TAB	ST. STL.	COML		5/8-11 UNC-2B SQUARE NUT
2								25	BAFFLE	CARBON STEEL	ASTM A36		1/4 PLATE
	1							24	OUTLET BACK	CARBON STEEL	ASTM A36		3/8 PLATE
	2							23	OUTLET SIDE	CARBON STEEL	ASTM A36		3/8 PLATE
	1							22	OUTLET TOP	CARBON STEEL	ASTM A36		3/8 PLATE
	1							21	OUTLET BOTTOM	CARBON STEEL	ASTM A36		3/8 PLATE
	1							20	SHIELD PLATE	CARBON STEEL	ASTM A36		2 PLATE
	1							19	TOP	CARBON STEEL	ASTM A36		2 PLATE
	1							18	BOTTOM	CARBON STEEL	ASTM A36		3/8 PLATE
		56						17	NELSON STUD	CARBON STEEL	COML		3/4 X 6 3/16 S.S.
		1						16	BASE PLATE	CARBON STEEL	ASTM A36		2 PLATE
		1						15	STAND	CARBON STEEL	ASTM A36		2 PLATE
		4						14	INLET TOP	CARBON STEEL	ASTM A36		2 1/4 PLATE
		8						13	INLET SIDE	CARBON STEEL	ASTM A36		3/8 PLATE
		1						12	BOTTOM	CARBON STEEL	ASTM A36		1 PLATE
		4						11	SHIELD RING	CARBON STEEL	ASTM A36		2 PLATE
		4						10	COVER	CARBON STEEL	ASTM A36		3/8 PLATE
		1						9	BAFFLE WELDMENT			790-561-92	
			4	4	4	4	4	8	JAM NUT	CARBON STEEL	COML		1-8UNC-2B
			4	4	4	4	4	7	JACK NUT	CARBON STEEL	COML		1-8UNC-2B
			4	4	4	4	4	6	JACK SCREW	CARBON STEEL	COML		1-8UNC-2A X 5 LG
			8	8	8	8	8	5	JACK GUSSET	CARBON STEEL	ASTM A36		3/8 PLATE
			4	4	4	4	4	4	JACK BASE	CARBON STEEL	ASTM A36		1 1/2 PLATE/BAR
			1	1	1	1	1	3	SUPPORT RING	CARBON STEEL	ASTM A36/A105		2 1/2 X 3 RECT. BAR/FORGING/PLATE
			1	1	1	1	1	2	TOP FLANGE	CARBON STEEL	ASTM A36		2 PLATE
							1	1	SHELL	CARBON STEEL	ASTM A36		2 1/2 PLATE

QUANTITY

UNLESS OTHERWISE STATED	GROUP	NAME	DATE
DIMENSIONING AND TOLERANCING SHALL BE PER ASME Y14.5M-94			
ALL THREAD DEPTH CALLOUTS ARE TO BE CONSIDERED AS A MIN. DEPTH OF PERFECT THREADS.	PREPARED	R. Wallen	10-7-04
	CHECKED	Ken Hoedeman	10/12/04
	PROJECT MANAGER		10/12/04
	ENGINEERING		10/25/04
ALL DIMENSIONS ARE IN INCHES			
MACHINED SURFACES TO BE ▽ OR BETTER	LICENSING		11/3/04
NEXT ASSEMBLY: 790-562	QUALITY		11/3/04
DRAWING TYPE: LICENSE			

NAC INTERNATIONAL

WELDMENT, STRUCTURE, VERTICAL CONCRETE CASK (VCC) NAC-UMS®

PROJECT	DRAWING	REV
790	561	12
	SH 1 OF 4	6 digits 10-7-2004

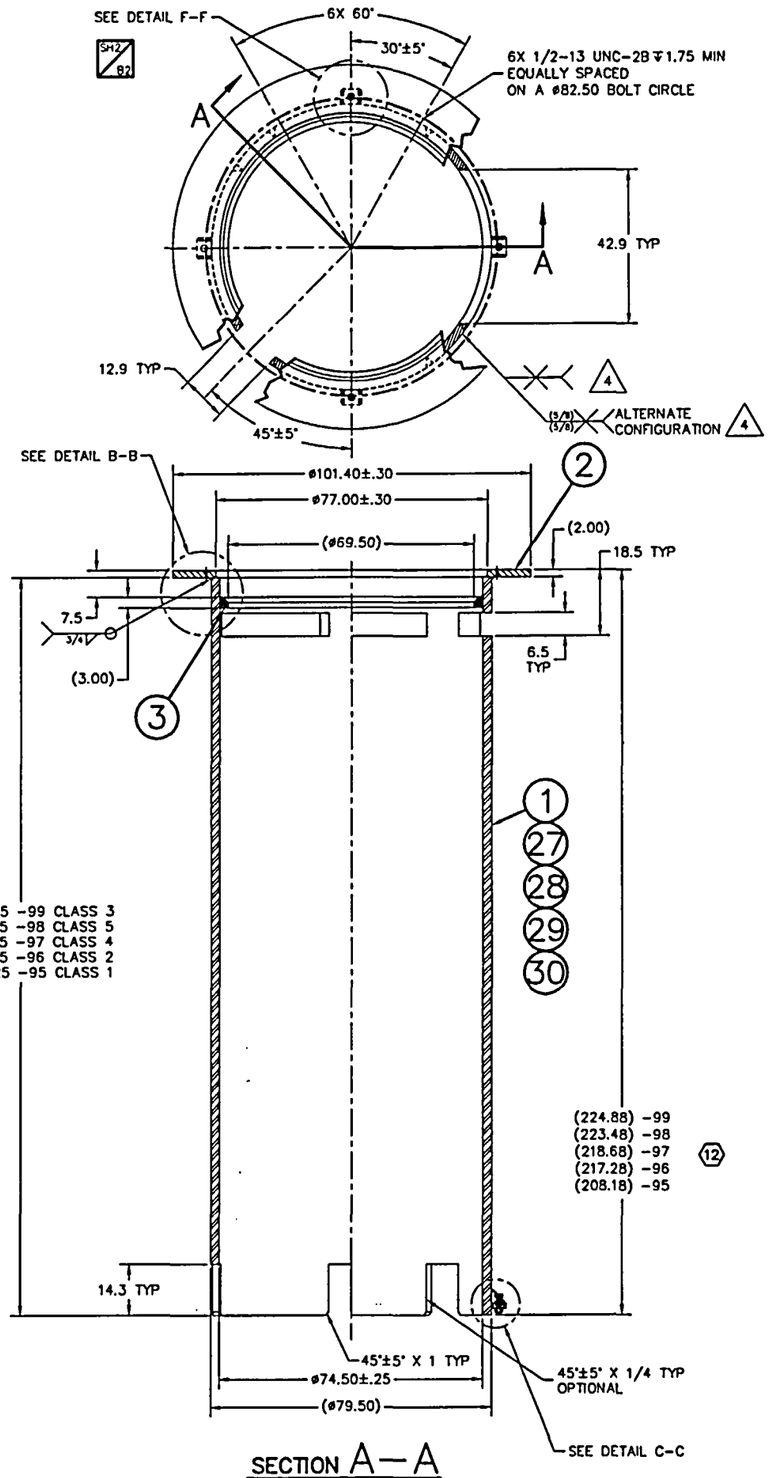

SECTION A—A

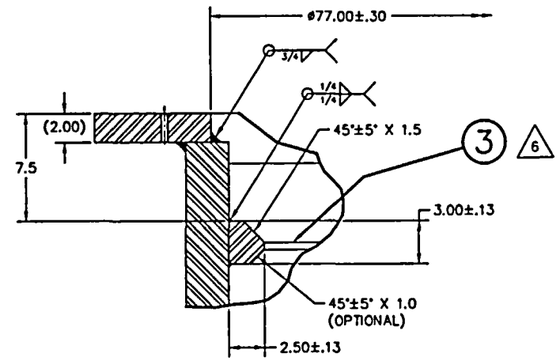

DETAIL B—B
12

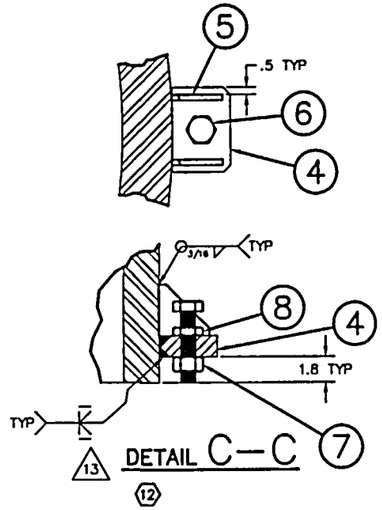

DETAIL C—C
12

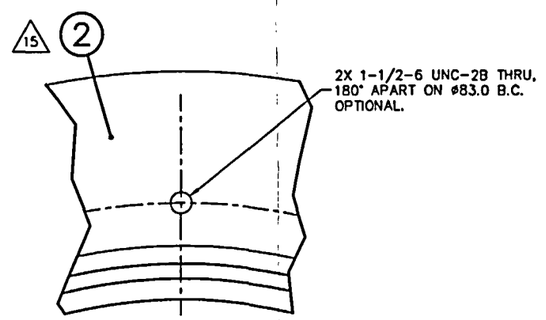

DETAIL F—F
SH2 / F8
12

NAC INTERNATIONAL

WELDMENT, STRUCTURE,
VERTICAL CONCRETE CASK (VCC)
NAC-UMS®

PROJECT	790	DRAWING	561	REV 12
SCALE 1/16	WEIGHT	SH 2 OF 4	ADPM 10-7-2004	

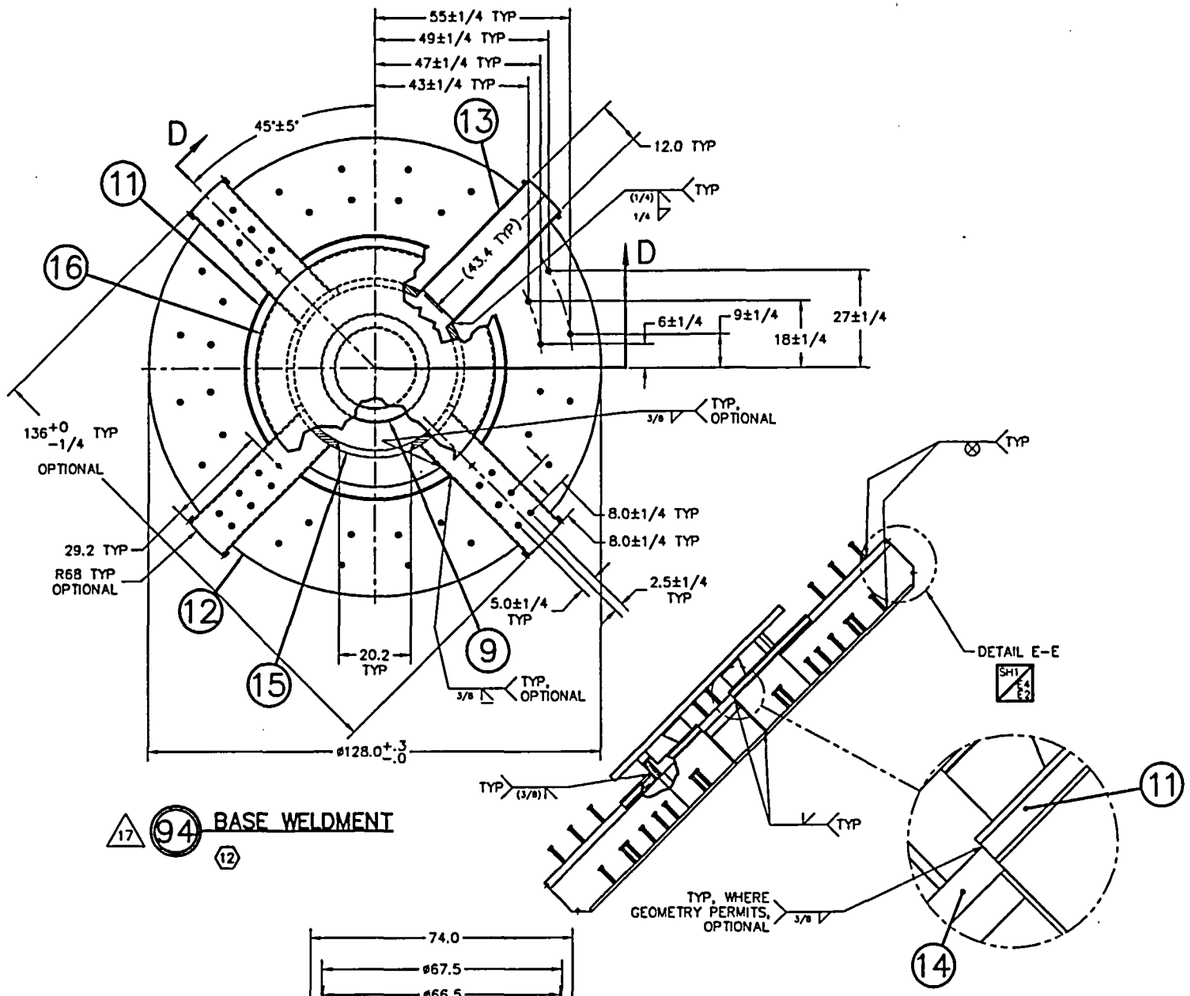

NAC INTERNATIONAL	
WELDMENT, STRUCTURE, VERTICAL CONCRETE CASK (VCC) NAC-UMS®	
PROJECT 790	DRAWING 561 REV 12
	SH 3 OF 4

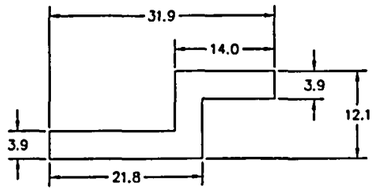

(23) OUTLET SIDE (12)

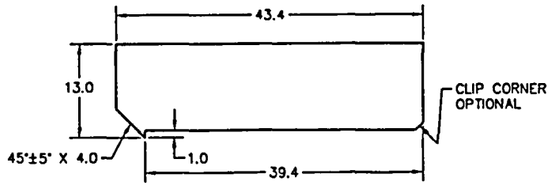

(13) INLET SIDE (12)

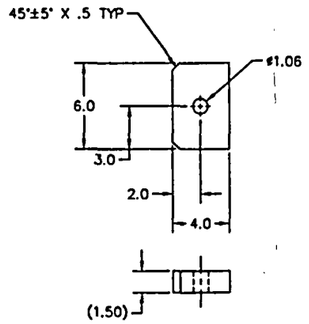

(4) JACK BASE (12)

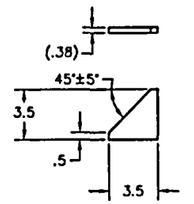

(5) JACK GUSSET (12)

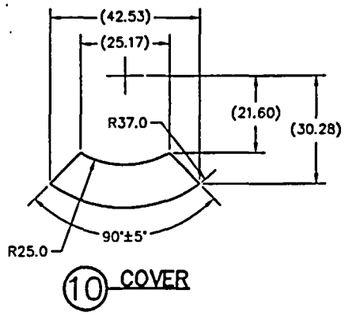

(10) COVER

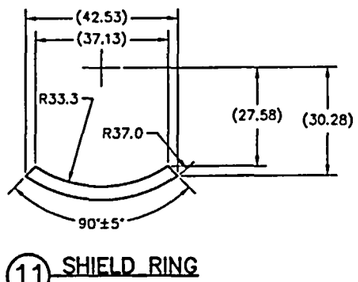

(11) SHIELD RING

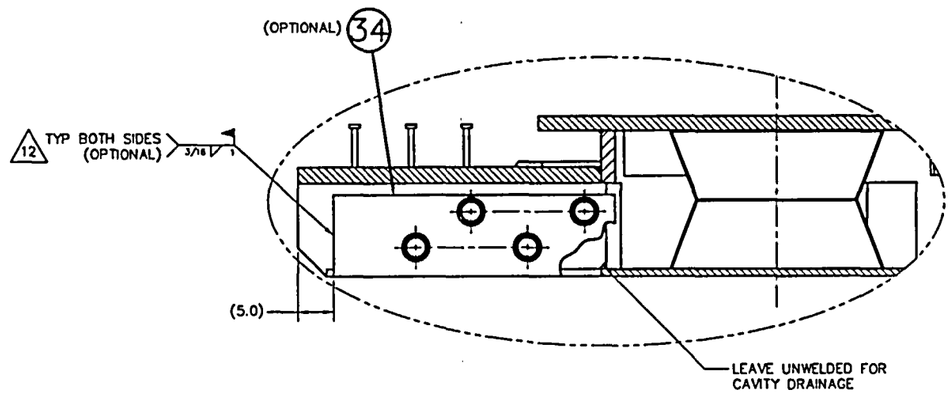

DETAIL G–G (SH 3 / AB)
OPTIONAL CONFIGURATION

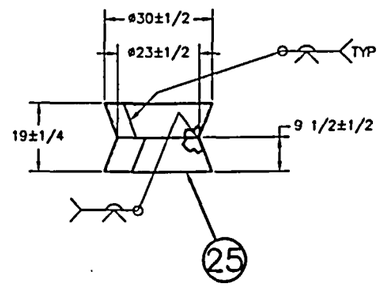

8 BAFFLE WELDMENT (92)

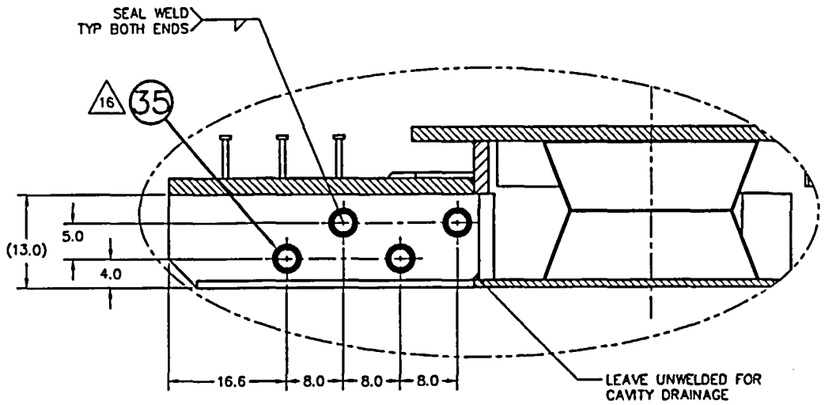

DETAIL G–G (SH 3 / AB)
OPTIONAL CONFIGURATION

NAC INTERNATIONAL

WELDMENT, STRUCTURE, VERTICAL CONCRETE CASK (VCC) NAC-UMS®

PROJECT	DRAWING	REV
790	561	12
	SH 4 OF 4	

REV	CHANGE
0	INITIAL ISSUE
1	INC DCR 0A
2	INC DCR 1A
3	INC DCR 2A
4	INC DCR 3A
5	INC DCR 4A
6	INC DCR 5A,5B,5C,5D,5E
7	INC DCR 6A,6B,6C
8	INC DCR 7A,7B,7C,7D
9	INC DCR 8A,8B,8C,8D,8E
10	INC DCR 9A
11	INC DCR 10A,10B,10C,10D
12	INC DCR 11A,11B,11C,11D,11E
13	INC DCR 12A,12B,12C,12D
14	INC DCR 13A,13B,13C

REBAR LENGTHS (TOLERANCE ±1)

ITEM 1	ITEM 2	ITEM 3	ITEM 4	ITEM 5	ITEM 6	CASK ASSEMBLY	CLASS
191.0	201.5	177.5	185.5	172.5	187.5	95	PWR 1
200.1	210.6	186.6	194.6	181.4	196.6	96	PWR 2
201.5	212	188	196	182.8	198	97	BWR 4
206.3	216.8	192.8	200.8	187.6	202.8	98	BWR 5
207.7	218.2	194.2	202.2	189	204.2	99	PWR 3

22. APPLY SILICONE CAULK BETWEEN THE EDGE OF ITEM 34 AND THE TOP FLANGE OF THE LINER WELDMENT, IF THE GAP IS 3/8 OR LESS.

21. ENGAGE THREAD OF ITEM 33 (REBAR) FLUSH TO THE TOP OF ITEM 32 (BASE PLATE).

20. WELD EFFECTIVE THROAT MAY BE REDUCED BY 1/8 AT THE EDGE OF TAPPED HOLE.

19. AFTER COMPLETION OF LOAD TESTING AND POST LOAD TESTING NDE, THE LIFT ANCHORS, FOR APPROXIMATELY 18" ON THE LIFT END, SHALL BE PREPARED IN ACCORDANCE WITH SSPC-SP1 AND COMMERCIAL BLASTED PER SSPC-SP6. APPLY KEELER & LONG KOLOR-POXY PRIMER #3200 AND KEELER & LONG ACRYTHANE ENAMEL Y-1 SERIES PER MANUFACTURES APPLICATION INSTRUCTIONS.

(14) 18. ITEM 36 (CONCRETE ANCHOR) AND 37 (SCREEN SCREW) AND 38 (WASHER) TO BE USED WHEN ALTERNATE ASSEMBLIES -93 AND -94 ARE USED.

(14) 17. ITEM 10 (REBAR) MAY REST ON THE TOP OF THE OUTLET WELDMENT LIFTING NUT OR MAY BE LOCATED TANGENT TO THE DIAMETER OF ITEM 9.

16. SHIM PLATES MAY BE UTILIZED TO FACILITATE FIELD WELDING OPERATIONS ON ONE OR BOTH SIDES OF THE SUPPLEMENTAL SHIELDING WELDMENT. LOCATE WELDS APPROX. AS SHOWN.

15. SECURE THE AIR OUTLETS TO PREVENT BOTH UPWARD DISPLACEMENT DURING CONCRETE PLACEMENT AND DOWNWARD DISPLACEMENT DUE TO FABRICATION PRIOR TO CONCRETE PLACEMENT.

14. ITEM 5 MAY BE INSTALLED WITH HOOK AT TOP OF CASK. ALTERNATELY, THE 90° BEND MAY BE SUBSTITUTED WITH A 180° HOOK. LENGTH OF BAR MAY BE SAME AS ITEM 3 AS SHOWN ON THE REBAR LENGTH TABLE.

13. ITEM 18, FLAT WASHER, MAY BE REPLACED AS NEEDED WITH A 5/8 DIA, STAINLESS STEEL, BEVEL WASHER.

12. LOCATION OF HORIZONTAL REINFORCEMENT (HOOP BARS) CAN BE REVERSED WITH THE VERTICAL REINFORCEMENT, BOTH INSIDE AND OUTSIDE REINFORCEMENT CURTAIN.

11. ITEM 17 MAY BE CONSTRUCTED FROM SINGLE PIECE PLATE. FIELD MODIFICATION OF HOLES IN ITEM 17 TO ALLOW FIT-UP IS PERMISSIBLE AS LONG AS SCREENS ARE NOT DAMAGED. ITEMS 16 AND 17 MAY BE TRIMMED IN THE FIELD TO ALLOW FIT-UP.

10. COAT ALL EXPOSED CONCRETE SURFACES WITH AN APPROVED SEALER.

9. INSTALL PER MANUFACTURERS INSTRUCTIONS. OTHER STAINLESS STEEL DROP IN ANCHORS ARE ACCEPTABLE FOR USE IN PLACE OF ITEM 28. IF ALTERNATIVE ANCHORS ARE USED THEN THE SCREW/BOLT (ITEM 29) SHALL BE STAINLESS STEEL AND MATE WITH THE ANCHOR.

8. INSTALL PLUGS INTO SCREEN ATTACHMENT POINTS PRIOR TO FORMING

7. DURING FABRICATION SEGMENTED HOOPS MAY BE USED IN LIEU OF WHOLE HOOPS.

6. CONCRETE SHALL DEVELOP A COMPRESSIVE STRENGTH (F_C') OF 4000 PSI USING TYPE 2 PORTLAND CEMENT, 1 1/2 IN. MAXIMUM SIZE AGGREGATE. CONCRETE DENSITY SHALL BE 140 PCF MINIMUM.

5. ALL REBAR OVERLAPS TO BE 33 INCHES MINIMUM. REBAR OVERLAPS IN ADJACENT HOOPS SHALL NOT BE VERTICALLY ALIGNED.

4. A 3 INCH CONCRETE COVER SHALL BE MAINTAINED FOR REINFORCEMENT AT THE EXTERIOR CONCRETE SURFACES, 2 INCH CONCRETE COVER BETWEEN THE CASK LINER AND THE REINFORCEMENT, AND 3/4 INCH CONCRETE COVER BETWEEN THE OTHER NON-EXPOSED SURFACES AND THE REINFORCEMENT UNLESS OTHERWISE NOTED, IN ACCORDANCE WITH THE TOLERANCES AS ALLOWED BY ACI 117-90.

3. ALL BENDING OF REBARS SHALL BE PERFORMED COLD, ALL HOOKS ARE STANDARD UNLESS OTHERWISE DETAILED.

2. ALL REINFORCEMENT BARS MAY BE FIELD CUT, BENT AND PLACED OR TIED FOR CLEARANCE AS APPROVED BY NAC ENGINEERING.

1. REINFORCEMENT FABRICATION SHALL COMPLY WITH ACI 318/318R AND 349/349R STANDARDS. REINFORCEMENT PLACEMENT SHALL BE IN ACCORDANCE WITH ACI 117-90 TOLERANCES.

NOTES:

32. HILTI #00045788 OR #00336431, (HDI 3/8" SS303) MAY BE USED.

31. THE NAC-UMS VERTICAL CONCRETE CASK NUMBER MAY BE FORMED INTO THE CONCRETE SHELL. THE FORMED NUMBERS SHALL BE APPROXIMATELY 12" X 12" NOT TO EXCEED .4" DEEP.

30. CONCRETE ANCHOR ADHESIVE SUCH AS HILTI ADHESIVE HIT HY 150 OR EQUIVALENT MAY BE USED TO PREVENT THE CONCRETE ANCHOR FROM BECOMING LOOSE OR PULLING OUT.

29. SEAL WELD OPEN SEAMS.

28. HOLES ARE TO BE LOCATED AND DRILLED IN THE FIELD AS NEEDED.

27. ITEM 32 AND NELSON STUDS ON THE BASE WELDMENT MAY COME IN CONTACT WITH REINFORCING STEEL, HOWEVER, A CLEAR COVER OF 3/4" SHALL BE MAINTAINED BETWEEN ITEM 31 AND REBAR.

26. AT THE USE OF ASSY 92 (ALTERNATE CONFIGURATION-D) TWO OF ITEM 6 MAY BE CUT TO FIT.

25. ITEM 44 TO BE HAND TIGHTENED AND TURNED ONE LAND. ITEM 45 TO BE MODIFIED AS REQUIRED FOR FIT-UP.

24. ITEM 43, 1 1/4 NOM. 120 KSI WILLIAMS ALL THREAD-BAR (R71)
ITEM 44, WILLIAMS HEX NUT (R73-10)
ITEM 45, WILLIAMS HARDENED WASHER (R9F-10)

23. ITEMS 39, 40, AND 41 ARE APPLICABLE FOR ALTERNATE HOLE LOCATIONS ON ASSEMBLY 94 ALTERNATE FABRICATION-C AND THE 9/16" HOLES LOCATED ON EITHER SIDE. ITEMS 36, 37, AND 38 MAY BE USED FOR HOLES LOCATED AT THE TOP AND BOTTOM CENTER OF ASSEMBLY 94 ALTERNATE FABRICATION-C.

ASSY 92	ASSY 93	ASSY 94	ASSY 95	ASSY 96	ASSY 97	ASSY 98	ASSY 99	ITEM	NAME	MATERIAL	SPEC	DRAWING No.	DESCRIPTION
			A/R	A/R	A/R	A/R	A/R	49	SCREEN	304 ST. STL.	COML		4X4 MILLING GR. .035" WIRE CLOTH
			8	8	8	8	8	48	RETAINER PLATE	304 ST. STL.	ASTM A240		14 GA. – 18 GA. SHEET
1								47	SPACER	CARBON STEEL	ASTM A537, CL 2		2 PLATE
8								46	REBAR	CARBON STEEL	ASTM A706		#11
12								45	WASHER	COML	SEE NOTE 24		SEE NOTE 24
12								44	NUT	COML	SEE NOTE 24		SEE NOTE 24
6								43	THREADED REBAR	COML	SEE NOTE 24		SEE NOTE 24
			4	4	4	4	4	42	SUPPLEMENTAL COVER	304 ST. STL.	ASTM A240		18 GA. SHEET
			28	28	28	28	28	41	WASHER	ST. STL.	COML		1/4 I.D.
			24	24	24	24	24	40	SCREEN BOLT	ST. STL.	COML		1/4-20 UNC X 1/2 LG. HEX HEAD BOLT
			24	24	24	24	24	39	CONCRETE ANCHOR	ST. STL.	COML		HILTI #00336430 (HDI 1/4" (SS303)
			32	32	32	32	32	38	WASHER	ST. STL.	COML		3/8 TYPE B, SERIES W
			32	32	32	32	32	37	SCREEN SCREW	ST. STL.	COML		HEX HEAD CAP SCREW
			32	32	32	32	32	36	CONCRETE ANCHOR	ST. STL.	COML		SEE NOTE 32
								35	SUPPLEMENTAL SHIELDING			790-613-99	
								34	LIFTING ANCHOR			790-562-92	
8								33	REBAR	CARBON STEEL	ASTM A615 GR 75		#11
1								32	BASE PLATE	CARBON STEEL	ASTM A537, CL 2		2 PLATE
2								31	LIFTING LUG	CARBON STEEL	ASTM A537, CL 2		2 PLATE
			1	1	1	1	1	30	NAME PLATE			790-565-1	
			4	4	4	4	4	29	SCREW	18-8 ST. STL.	COML.		DROP-IN ANCHOR FASTENER
			4	4	4	4	4	28	CONCRETE ANCHOR	ZINC-ALLOY	COML.		DROP-IN ANCHOR
								27	NOT USED				
								26	NOT USED				
			4	4	4	4	4	25	INLET SCREEN			790-562-93	
			4	4	4	4	4	24	OUTLET SCREEN			790-562-94	
			1					23	STRUCTURE WELDMENT			790-561-95	
				1				22	STRUCTURE WELDMENT			790-561-96	
					1			21	STRUCTURE WELDMENT			790-561-97	
						1		20	STRUCTURE WELDMENT			790-561-98	
			24	24	24	24	24	19	SCREEN SCREW	ST. STL.	COML.		5/8-11 UNC-2A X 1.0 LG. HEX BOLT
			24	24	24	24	24	18	FLAT WASHER	ST. STL.	COML.		5/8 DIA, TYPE B, SERIES W
	A/R	A/R						17	STRIP	304 ST. STL.	ASTM A240		18 GA. SHEET
	A/R	A/R						16	SCREEN	304 ST. STL.	COML.		4X4 MILLING GR. WIRE CLOTH
			A/R	A/R	A/R	A/R	A/R	15	CONCRETE SHELL	CONCRETE	COML.		TYPE 2 PORTLAND CEMENT
			4	4	4	4	4	14	OUTLET WELDMENT			790-561-93	
							1	13	STRUCTURE WELDMENT			790-561-99	
			1	1	1	1	1	12	BASE WELDMENT			790-561-94	
			4	4	4	4	4	11	REBAR	CARBON STEEL	ASTM A615/A615M		#6(19)
			4	4	4	4	4	10	REBAR	CARBON STEEL	ASTM A615/A615M		#6(19)
			1	1	1	1	1	9	REBAR	CARBON STEEL	ASTM A615/A615M		#6(19)
			45	47	48	49	49	8	REBAR	CARBON STEEL	ASTM A615/A615M		#6(19)
			23	24	24	25	25	7	REBAR	CARBON STEEL	ASTM A615/A615M		#6(19)
			12	12	12	12	12	6	REBAR	CARBON STEEL	ASTM A615/A615M		#6(19)
			8	8	8	8	8	5	REBAR	CARBON STEEL	ASTM A615/A615M		#6(19)
			28	28	28	28	28	4	REBAR	CARBON STEEL	ASTM A615/A615M		#6(19)
			20	20	20	20	20	3	REBAR	CARBON STEEL	ASTM A615/A615M		#6(19)
			16	16	16	16	16	2	REBAR	CARBON STEEL	ASTM A615/A615M		#6(19)
			8	8	8	8	8	1	REBAR	CARBON STEEL	ASTM A615/A615M		#6(19)

QUANTITY

NAC INTERNATIONAL

UNLESS OTHERWISE STATED
DIMENSIONING AND TOLERANCING SHALL BE PER ASME Y14.5M-94
ALL THREAD DEPTH CALLOUTS ARE TO BE CONSIDERED AS A MIN. DEPTH OF PERFECT THREADS.
ALL DIMENSIONS ARE IN INCHES
MACHINED SURFACES TO BE ▽ OR BETTER
NEXT ASSEMBLY: 790-590
DRAWING TYPE: LICENSE

GROUP	NAME	DATE
PREPARER	Ken Hoedema	11-09-04
CHECKER	R. Walker	11-4-04
PROJECT MANAGER	JR Dayne	11-4-04
ENGINEERING	[signature]	11/4/04
LICENSING	Anthony L Patko	11/4/04
QUALITY	[signature]	11/4/04

REINFORCING BAR AND CONCRETE PLACEMENT, VERTICAL CONCRETE CASK (VCC) NAC-UMS®

PROJECT 790 | DRAWING 562 | REV 14 | SH 1 OF 7 | 11-4-2004

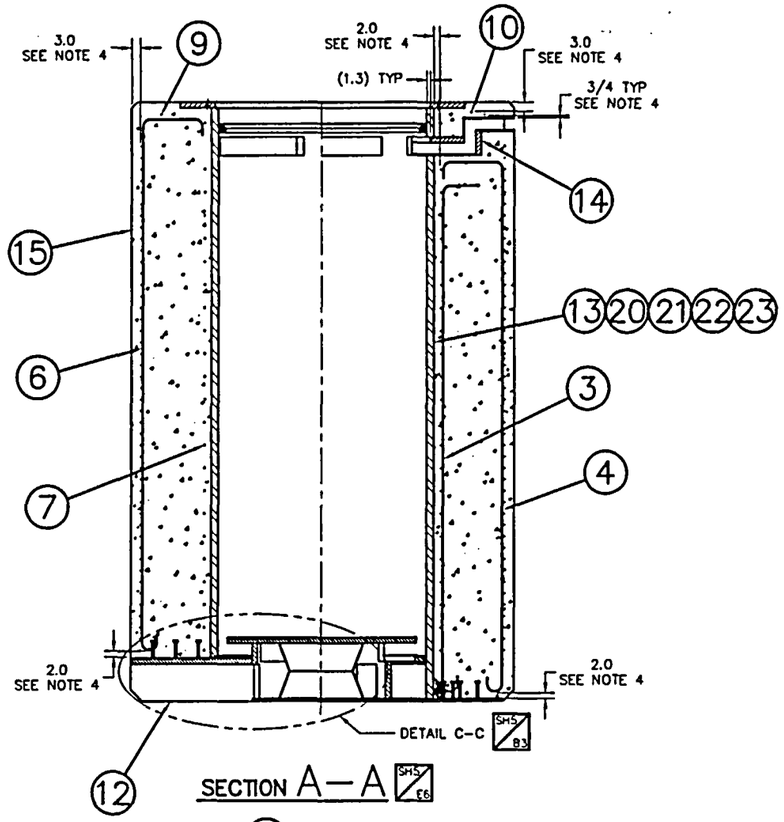

SECTION A—A SH 5 E6

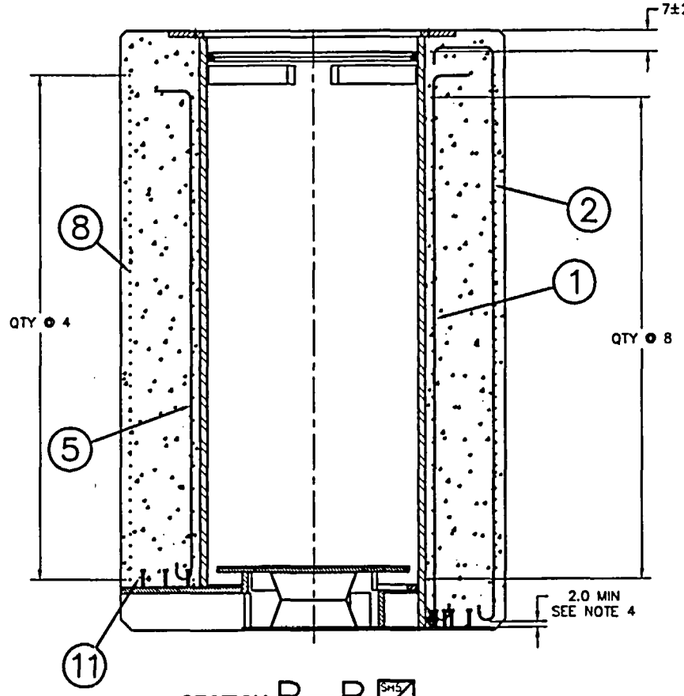

SECTION B—B SH 5 F6

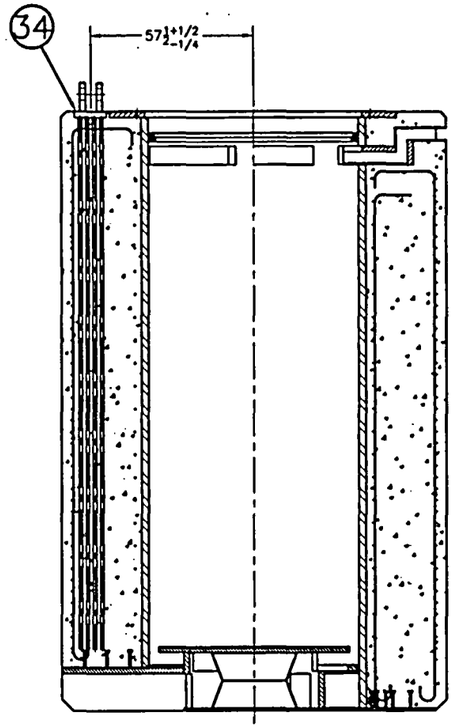

SECTION A—A SH 5 F3
(OPTIONAL LIFT ANCHOR)

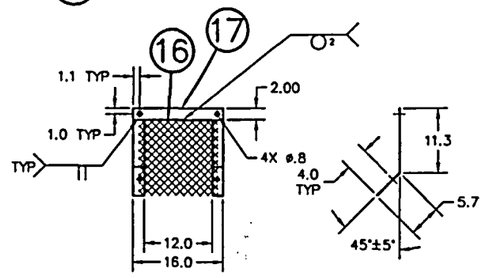

11 93 INLET SCREEN (14)

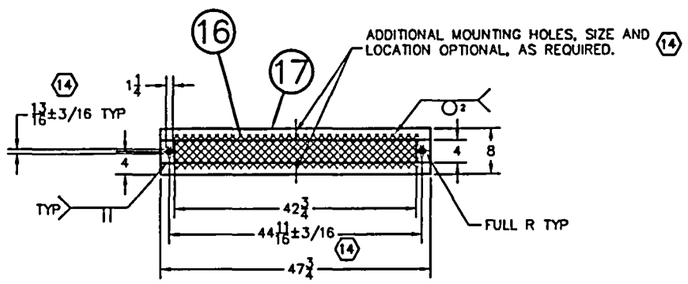

11 94 OUTLET SCREEN (14)

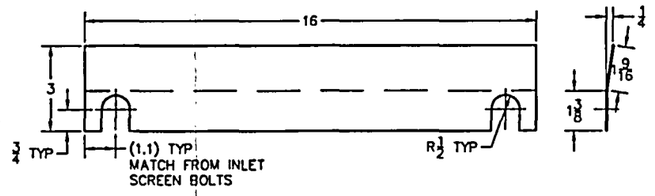

42 SUPPLEMENTAL COVER (14)

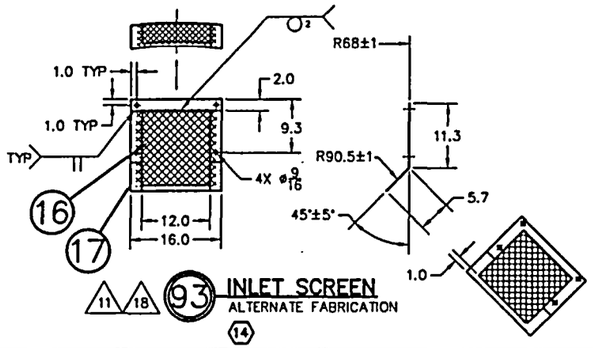

11 18 93 INLET SCREEN
ALTERNATE FABRICATION (14)

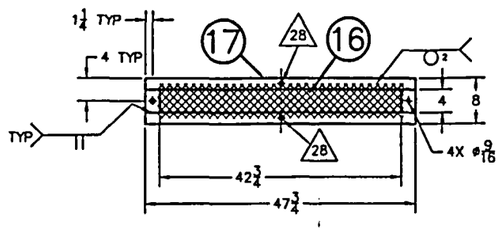

11 18 94 OUTLET SCREEN
ALTERNATE FABRICATION-B (14)

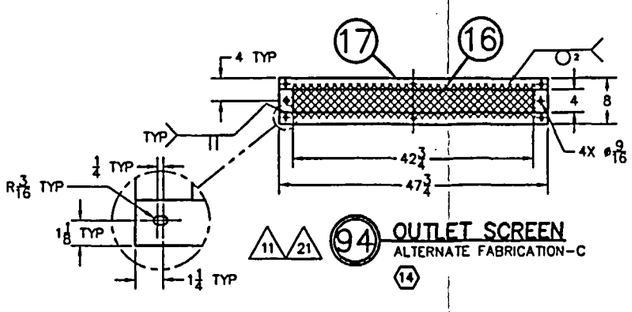

11 21 94 OUTLET SCREEN
ALTERNATE FABRICATION-C (14)

NAC INTERNATIONAL

REINFORCING BAR AND CONCRETE PLACEMENT, VERTICAL CONCRETE CASK (VCC) NAC-UMS®

PROJECT	DRAWING	REV
790	562	14
	SH 2 OF 7	

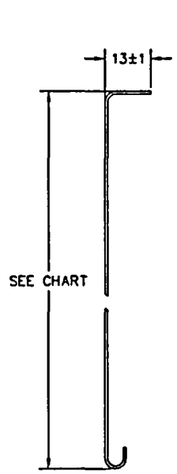

1 REBAR

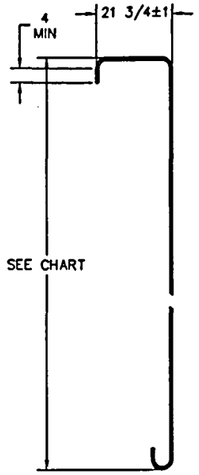

2 REBAR

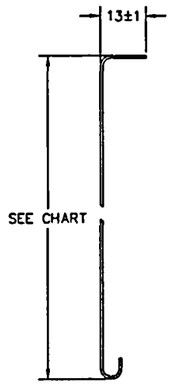

3 REBAR

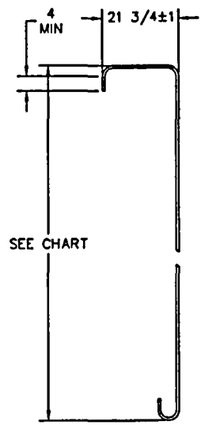

4 REBAR

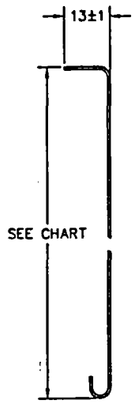

14 5 REBAR

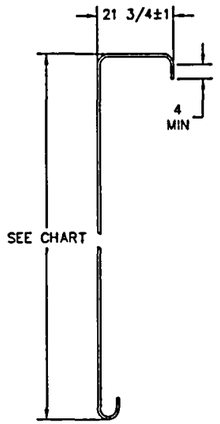

6 REBAR

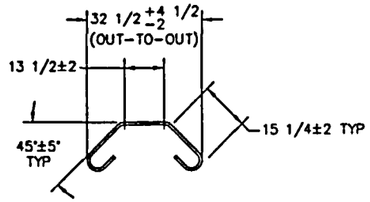

11 REBAR

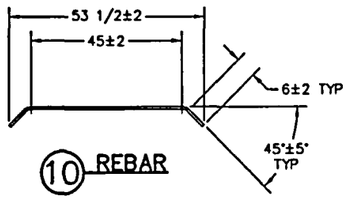

10 REBAR

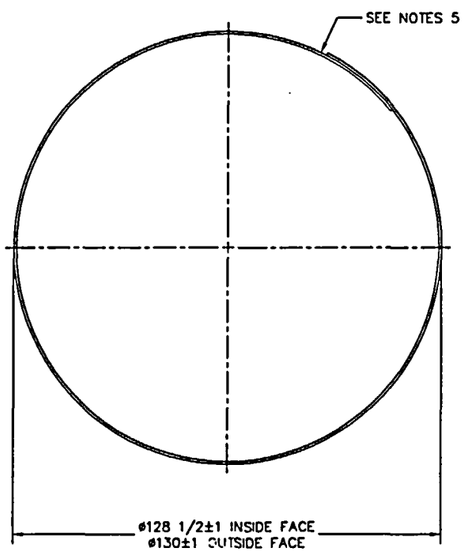

8 REBAR

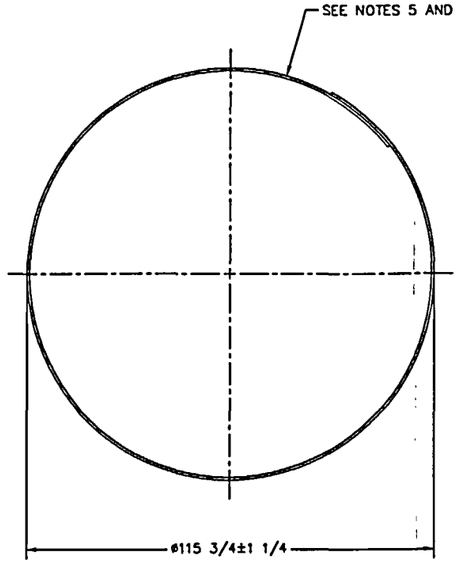

9 REBAR

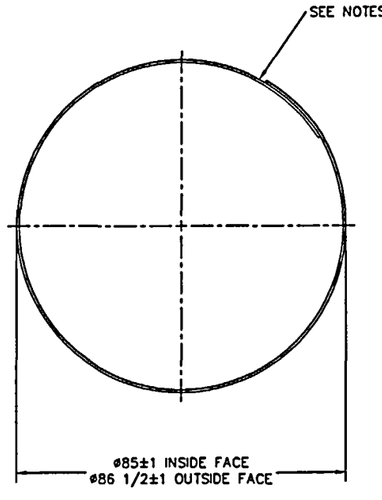

7 REBAR

NAC INTERNATIONAL

REINFORCING BAR AND CONCRETE PLACEMENT, VERTICAL CONCRETE CASK (VCC) NAC-UMS®

PROJECT	DRAWING	REV
790	562	14
	SH 3 OF 7	4:40PM 10-1-2004

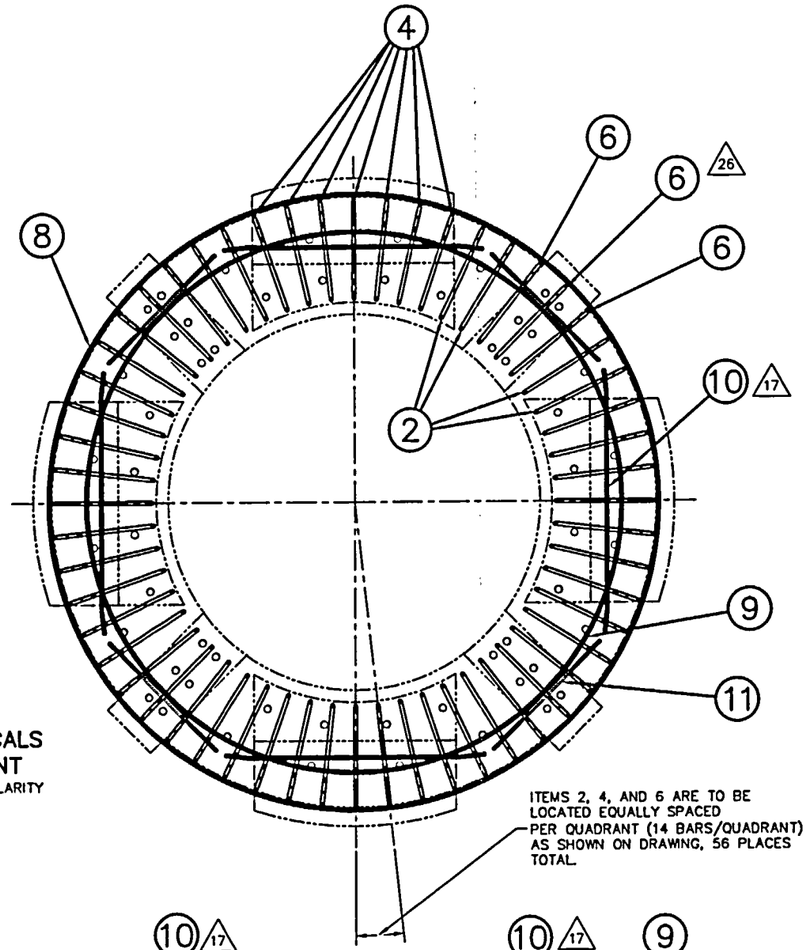

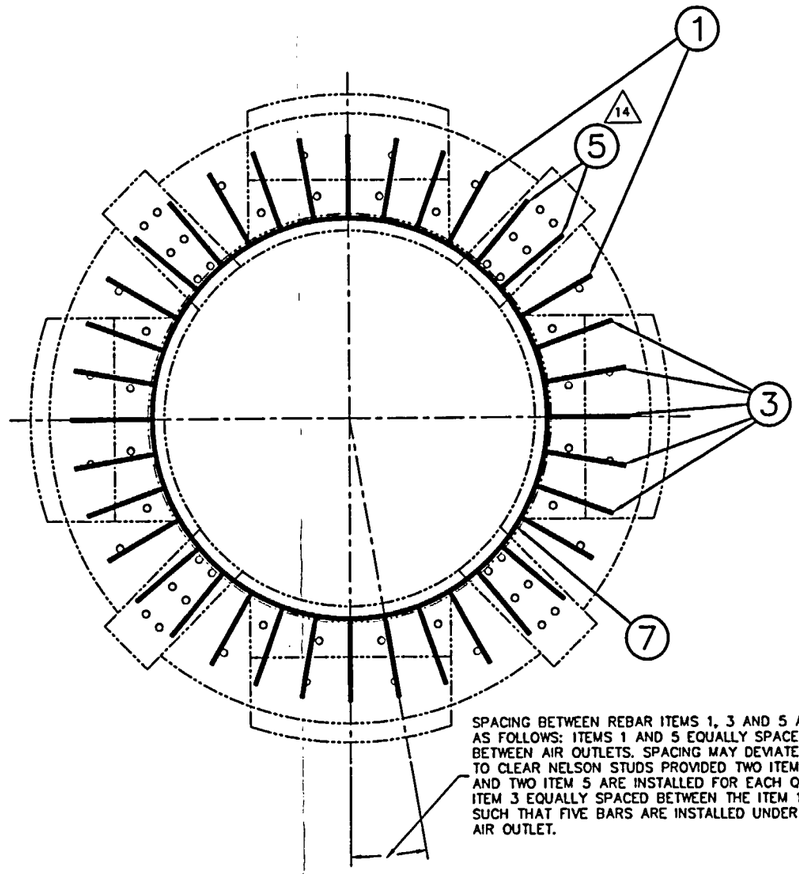

OUTER HOOPS AND VERTICALS
AND VENT REINFORCEMENT
REBAR SHOWN IN SEPARATE VIEWS FOR CLARITY

ITEMS 2, 4, AND 6 ARE TO BE LOCATED EQUALLY SPACED PER QUADRANT (14 BARS/QUADRANT) AS SHOWN ON DRAWING, 56 PLACES TOTAL.

SPACING BETWEEN REBAR ITEMS 1, 3 AND 5 ARE AS FOLLOWS: ITEMS 1 AND 5 EQUALLY SPACED BETWEEN AIR OUTLETS. SPACING MAY DEVIATE TO CLEAR NELSON STUDS PROVIDED TWO ITEM 1 AND TWO ITEM 5 ARE INSTALLED FOR EACH QUADRANT. ITEM 3 EQUALLY SPACED BETWEEN THE ITEM 1 BARS SUCH THAT FIVE BARS ARE INSTALLED UNDER EACH AIR OUTLET.

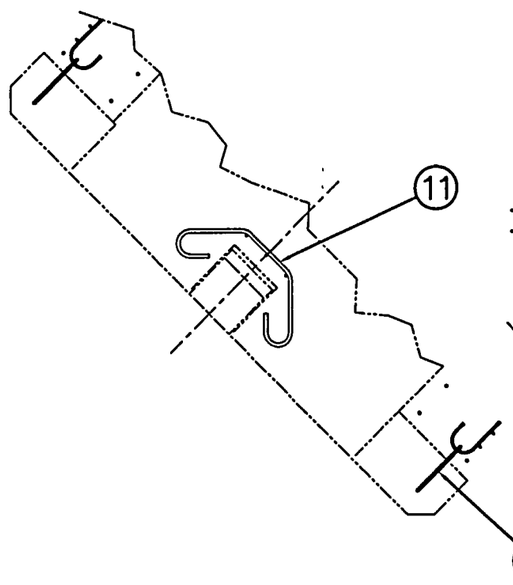

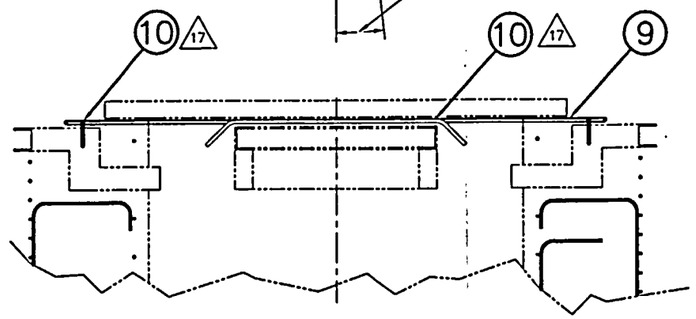

INNER HOOPS AND VERTICALS
REBAR SHOWN IN SEPARATE VIEWS FOR CLARITY

NAC INTERNATIONAL

REINFORCING BAR AND CONCRETE PLACEMENT, VERTICAL CONCRETE CASK (VCC) NAC-UMS®

PROJECT	DRAWING	REV
790	562	14
	SH 4 OF 7	

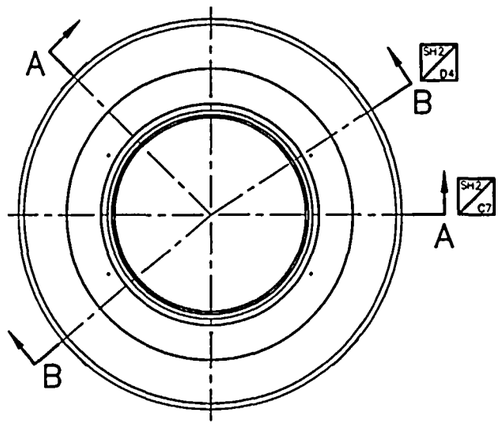

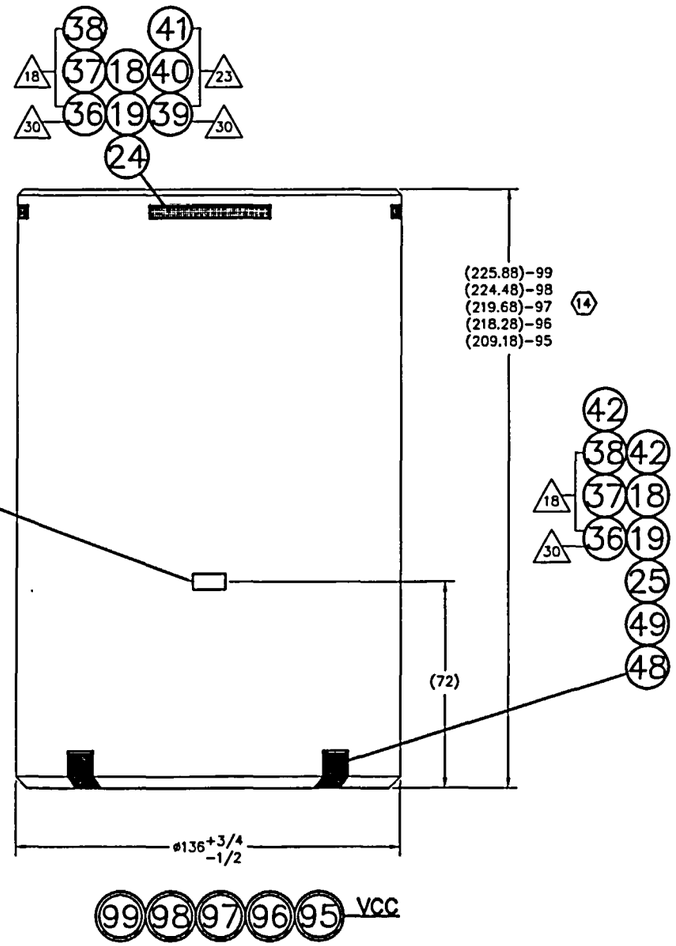

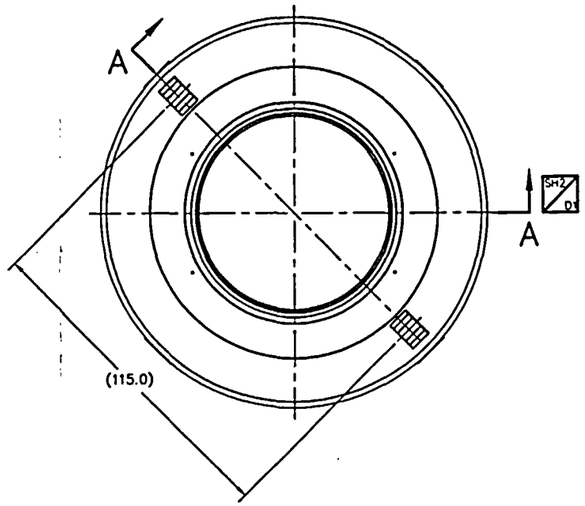

OPTIONAL LIFT ANCHORS
(2X ITEM 34 REQ'D FOR EACH)

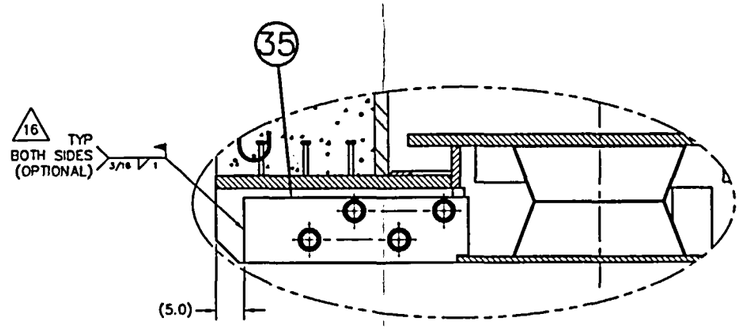

SH2 D6 DETAIL C—C
OPTIONAL CONFIGURATION
(4X ITEM 35 REQ'D FOR EACH)

NAC INTERNATIONAL

REINFORCING BAR AND CONCRETE PLACEMENT, VERTICAL CONCRETE CASK (VCC) NAC-UMS®

PROJECT	DRAWING	REV
790	562	14
	SH 5 OF 7	

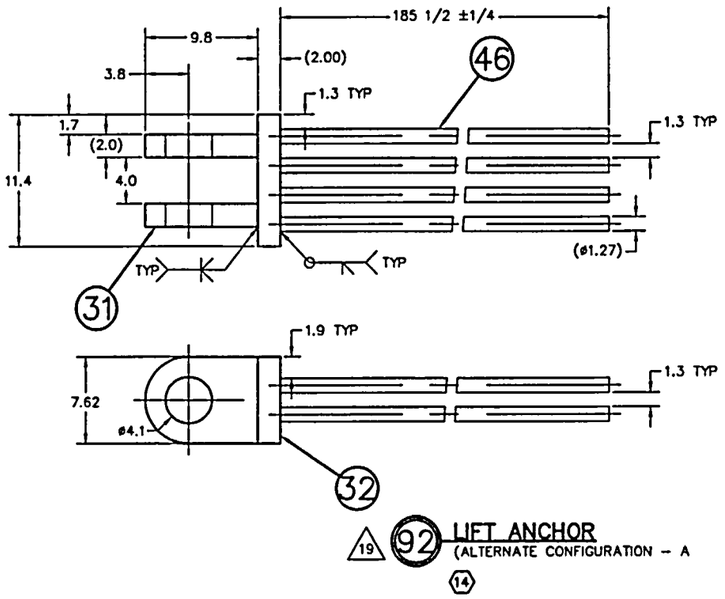

19 92 LIFT ANCHOR
(ALTERNATE CONFIGURATION – A)
14

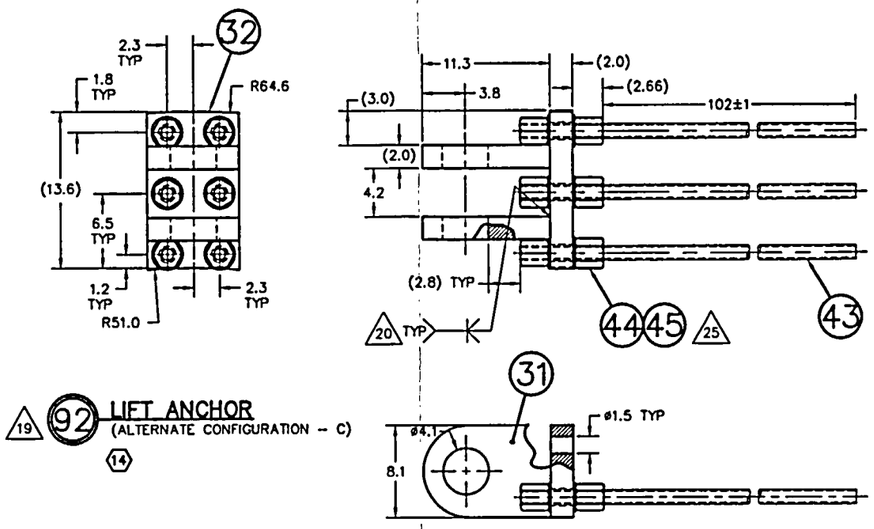

19 92 LIFT ANCHOR
(ALTERNATE CONFIGURATION – C)
14

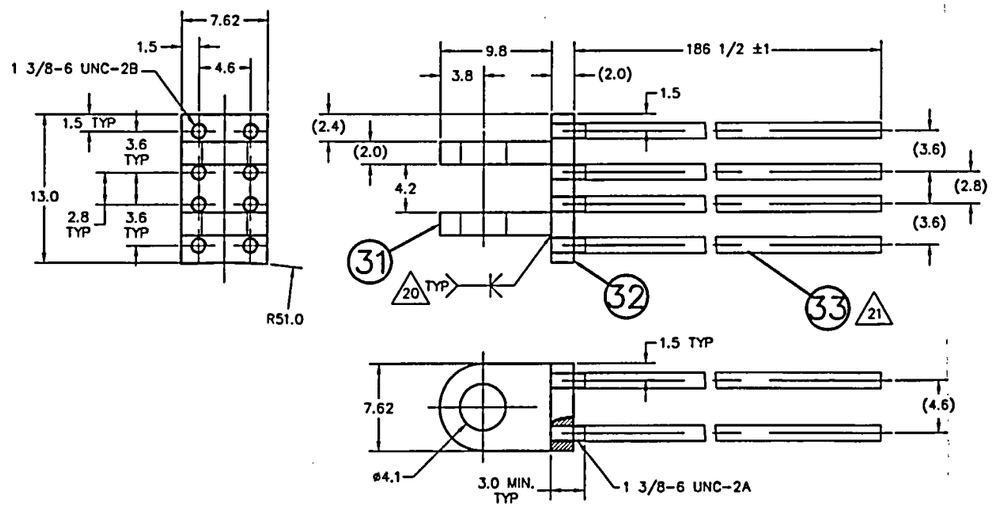

22 19 92 LIFT ANCHOR
(ALTERNATE CONFIGURATION – B)
14

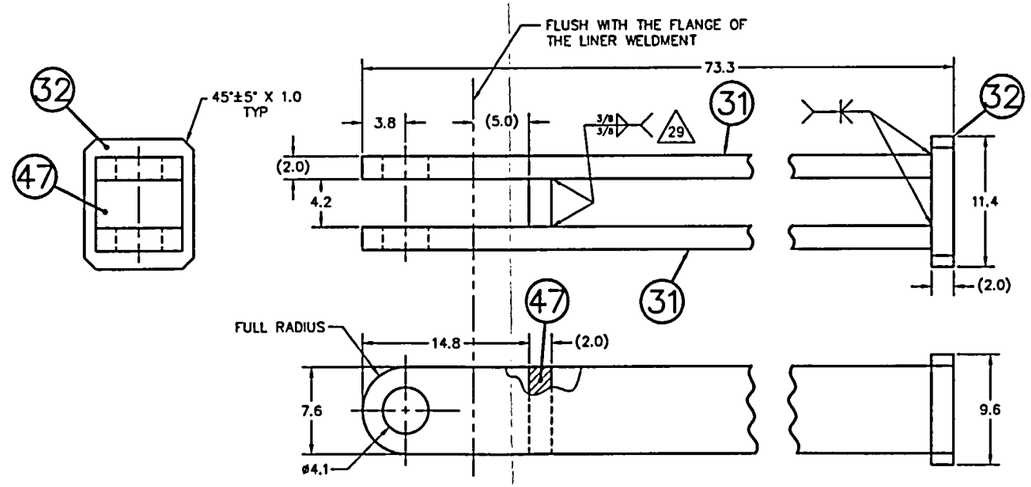

19 92 LIFT ANCHOR
(ALTERNATE CONFIGURATION – D)
14

NAC INTERNATIONAL

REINFORCING BAR AND CONCRETE PLACEMENT, VERTICAL CONCRETE CASK (VCC) NAC-UMS®

PROJECT	DRAWING	REV
790	562	14
	SH 6 OF 7	

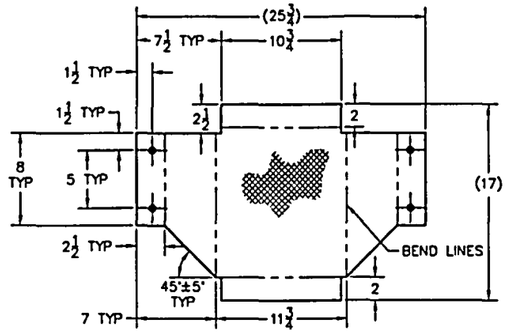

49 SCREEN
ALTERNATE FABRICATION-A

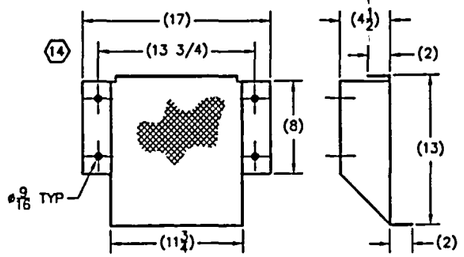

49 SCREEN
FOLDED

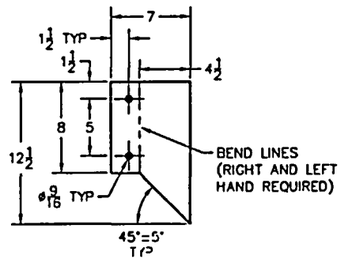

48 RETAINER PLATE
ALTERNATE FABRICATION-A

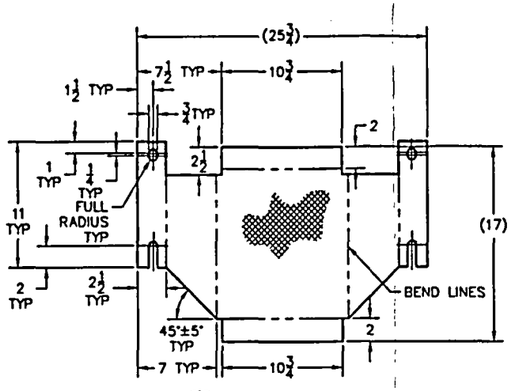

49 SCREEN
ALTERNATE FABRICATION-B

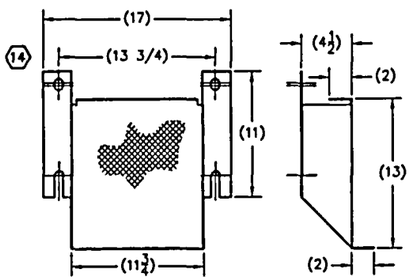

49 SCREEN
FOLDED

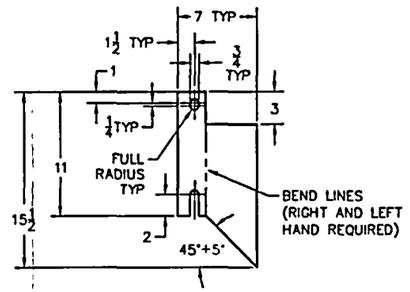

48 RETAINER PLATE
ALTERNATE FABRICATION-B

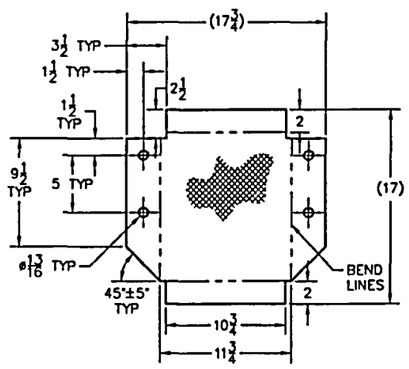

49 SCREEN
ALTERNATE FABRICATION-C

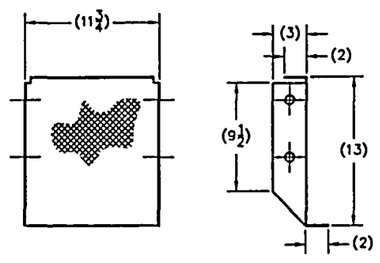

49 SCREEN
FOLDED

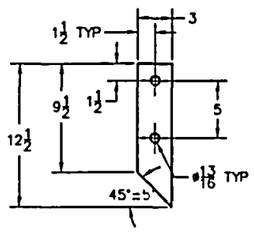

48 RETAINER PLATE
ALTERNATE FABRICATION-C

NAC INTERNATIONAL

REINFORCING BAR AND CONCRETE PLACEMENT, VERTICAL CONCRETE CASK (VCC) NAC-UMS®

PROJECT	DRAWING	REV
790	562	14
	SH 7 OF 7	10-7-2004

REV	CHANGE
0	INITIAL ISSUE
1	INC DCR 0A
2	INC DCR 1A
3	INC DCR 2A
4	INC DCR 3A
5	INC DCR 4A
6	INC DCR 5A
7	INC DCR 6A
8	INC DCR 7A
9	INC DCR 8A
10	INC DCR 9A

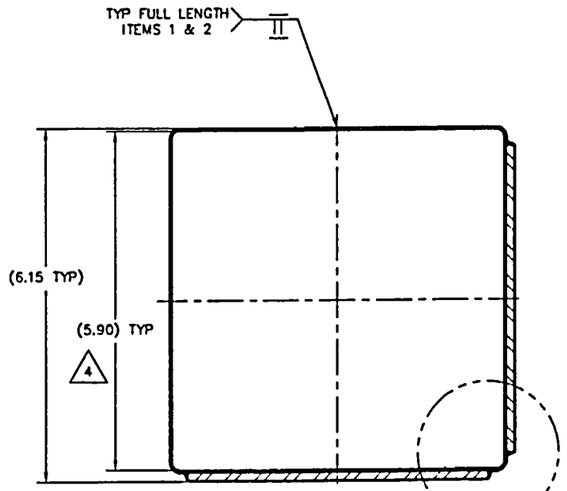

SECTION B–B

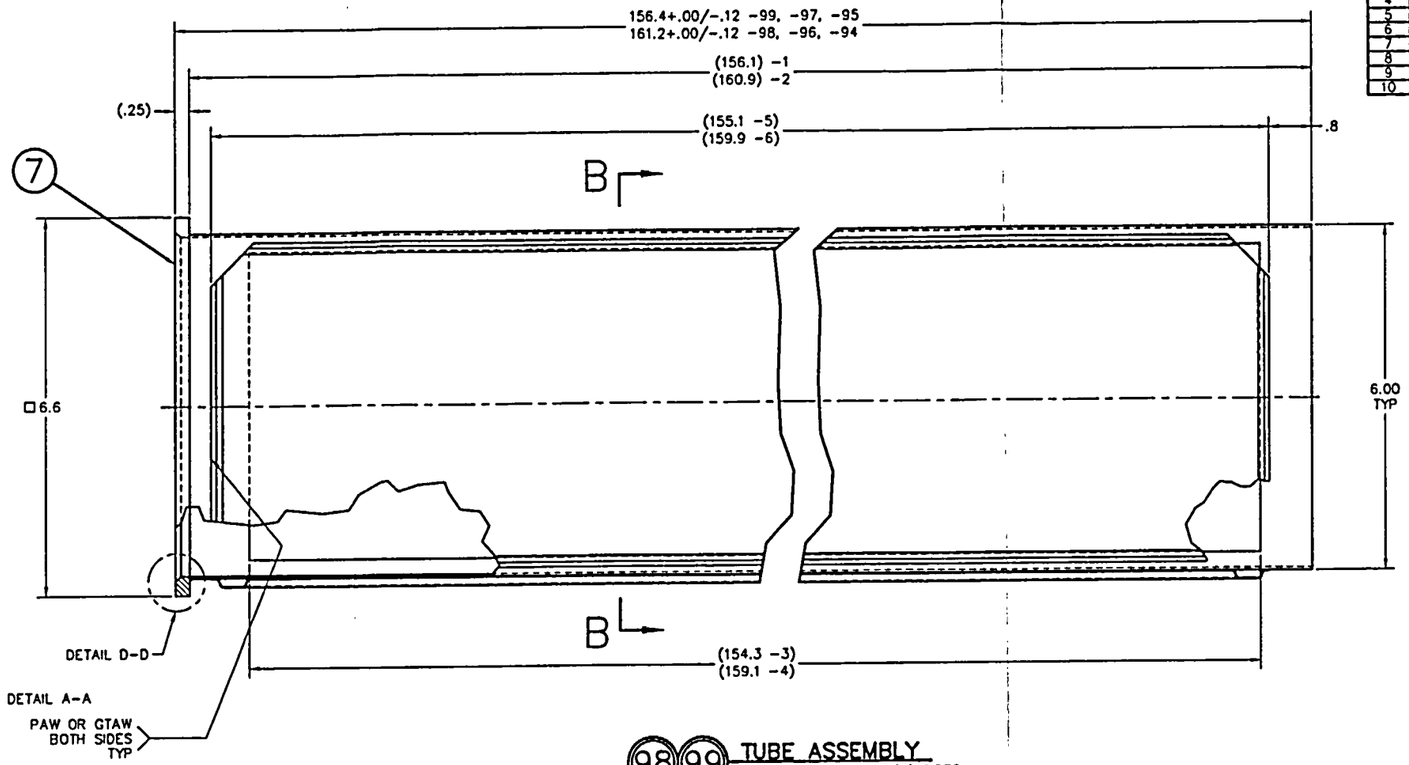

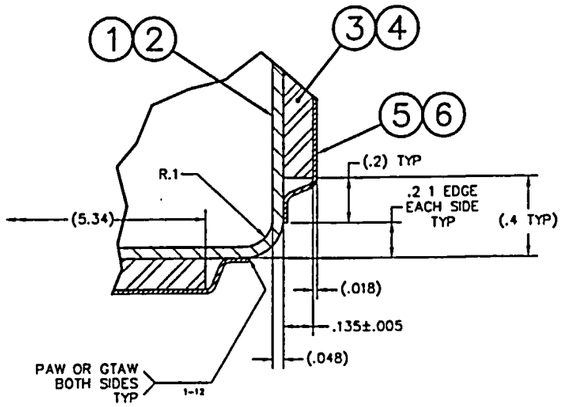

DETAIL A–A
SCALE: 4/1

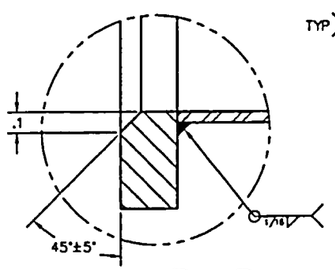

DETAIL D–D
SCALE: 4:1

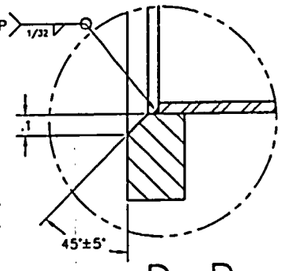

DETAIL D–D
SCALE: 4:1
(ALTERNATE FABRICATION)

98 99 TUBE ASSEMBLY
NEUTRON ABSORBER (2) SIDES

96 97 TUBE ASSEMBLY
NEUTRON ABSORBER (1) SIDE

94 95 TUBE ASSEMBLY
NO NEUTRON ABSORBER

4 INSIDE OPENING TO BE GAGED MIN. 5.7" SQUARE X 12' LONG

3. VISUALLY INSPECT (VT) ALL WELDS IN ACCORDANCE WITH ASME SECTION V, ARTICLE 9. ACCEPTANCE PER ASME SECTION III, NG-5360.

2. ALL WELDING PROCEDURES AND QUALIFICATIONS TO BE IN ACCORDANCE WITH ASME SECTION IX.

1. NEUTRON ABSORBER SHEETS TO PROVIDE MINIMUM AREAL DENSITY OF 0.011 g/cm² B10.

NOTES:

94	95	96	97	98	99	ITEM	NAME	MATERIAL	SPEC	DRAWING No.	DESCRIPTION
1	1	1	1	1	1	7	FLANGE	304 ST. STL.	ASTM A240		1/4 PLATE
		1		2		6	CLADDING	304 ST. STL.	ASTM A240		26 GA SHEET
			1		2	5	CLADDING	304 ST. STL.	ASTM A240		26 GA SHEET
		1		2		4	NEUTRON ABSORBER	BORAL	SEE NOTE 1		.135 SHEET
			1		2	3	NEUTRON ABSORBER	BORAL	SEE NOTE 1		.135 SHEET
1		1		1		2	TUBING	304 ST. STL.	ASTM A240		18 GA SHEET
	1		1		1	1	TUBING	304 ST. STL.	ASTM A240		18 GA SHEET
94	95	96	97	98	99	ITEM	NAME	MATERIAL	SPEC	DRAWING No.	DESCRIPTION
ASSY	ASSY	ASSY	ASSY	ASSY	ASSY	QUANTITY					

UNLESS OTHERWISE STATED

DIMENSIONING AND TOLERANCING SHALL BE PER ASME Y14.5M-94. UNSPECIFIED DIMENSIONAL TOLERANCES ARE SHOWN BELOW.

ALL THREAD DEPTH CALLOUTS ARE TO BE CONSIDERED AS A MIN DEPTH OF PERFECT THREADS. THE ACTUAL DEPTH OF THE THREADS IS NOT SUBJECT TO TOLERANCE CONTROLS.

MIX	UNDER 3	± .003
	3-12	± .005
	OVER 12	± .010
ICE	UNDER 6	± .02
	6-18	± .03
	OVER 18	± .05
M	ALL	± 1
FRACTIONAL ±1/8		
ANGLES ±0.5°		

WEIGHTS ARE APPROXIMATE AND ARE TO BE USED FOR HANDLING PURPOSES ONLY

ALL DIMENSIONS ARE IN INCHES

BORDER SIZE: F (40 X 28)

ALL UNSPECIFIED TOOL RADII .015 – .030

BREAK ALL SHARP CORNERS .015 – .030

MACHINED SURFACES TO BE 125 OR BETTER

NEXT ASSEMBLY: 790-570

DRAWING TYPE: LICENSE

GROUP	NAME	DATE
MANAGER	R. Walker	9-22-04
CHECKER	Dan Dunn	9-28-04
PROJECT MANAGER	Jack Hayden	9/23/04
ENGINEERING	Greg	9/24/04
LICENSING	J C Thompson	9-23-04
QUALITY	B T Bancroft for DHS	9/26/04

NAC INTERNATIONAL

BWR FUEL TUBE,
NAC-UMS®

PROJECT	DRAWING	REV
790	575	10
SCALE 1/1	SH 1 OF 2	9-22-04

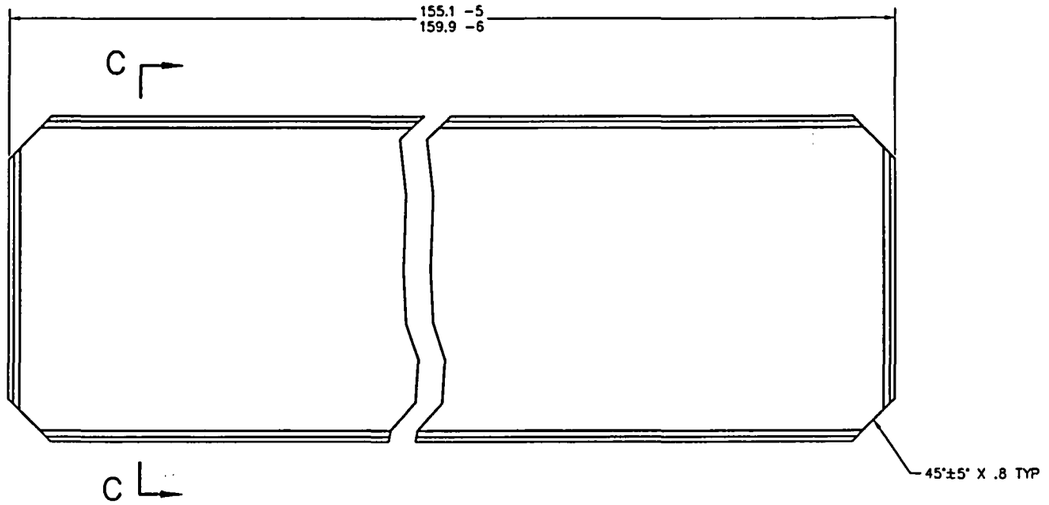

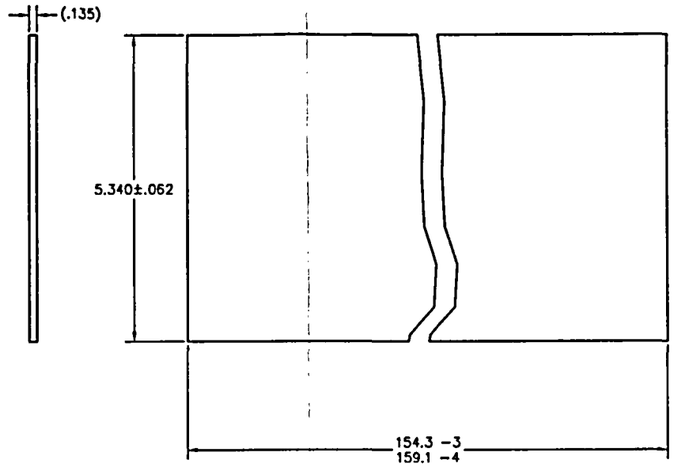

(5) CLADDING
(6) CLADDING

(3) NEUTRON ABSORBER
(4) NEUTRON ABSORBER

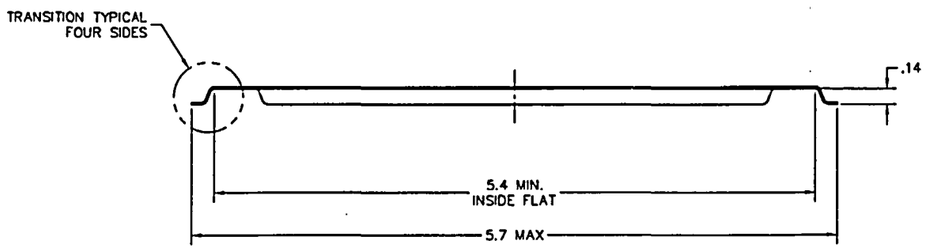

SECTION C–C
SCALE: 2/1
(ROTATED 90°)

NAC INTERNATIONAL

BWR FUEL TUBE,
NAC-UMS®

PROJECT	DRAWING	REV
790	575	10
SCALE 1/1	SH 2 OF 2	

REV	CHANGE
0	INITIAL ISSUE
1	INC. DCR 0A
2	INC. DCR 1A
3	INC. DCR 2A
4	INC. DCR 3A
5	INC. DCR 4A
6	INC. DCR 5A
7	INC. DCR 6A
8	INC. DCR 7A,7B,7C
9	INC. DCR 8A,8B

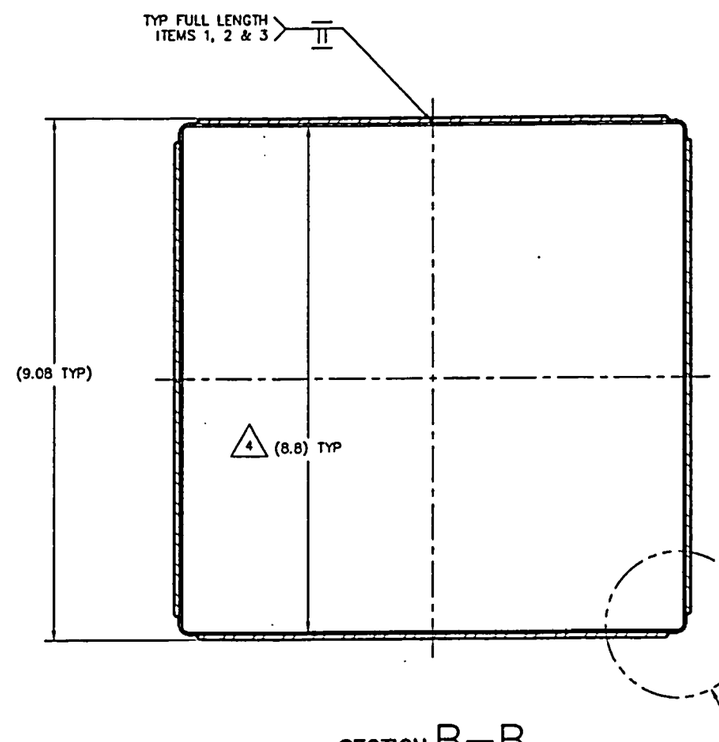

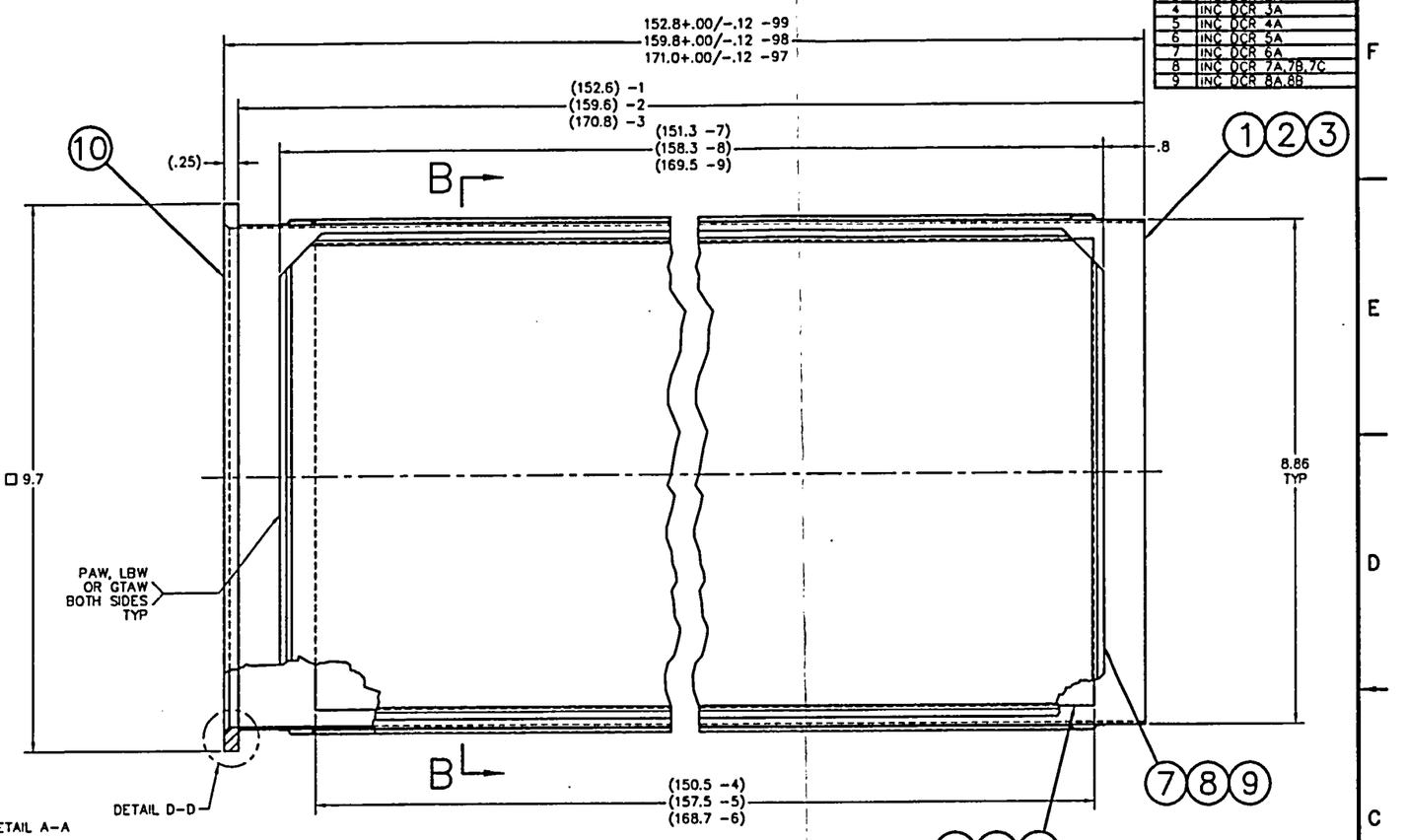

SECTION B—B

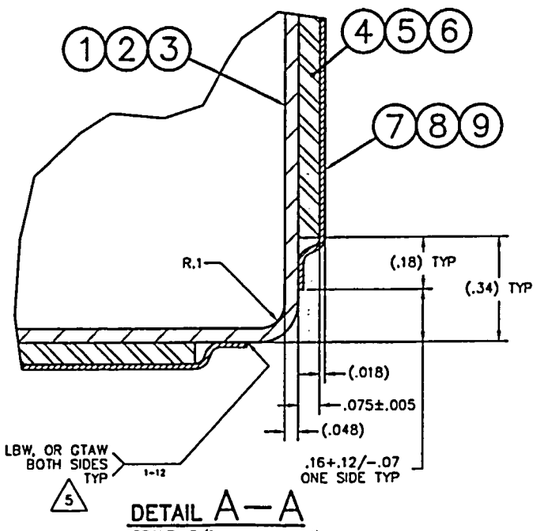

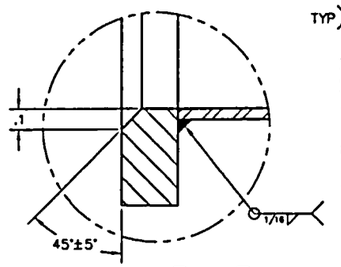

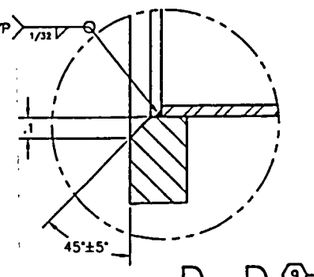

99 TUBE ASSEMBLY
98 TUBE ASSEMBLY
97 TUBE ASSEMBLY

5 ALTERNATIVELY, CLADDING MAY BE ATTACHED TO TUBE VIA A CONTINUOUS WELD.

4 INSIDE OPENING TO BE GAGED MIN. 8.65" SQUARE X 12' LONG.

3. VISUALLY INSPECT (VT) ALL WELDS IN ACCORDANCE WITH ASME SECTION V, ARTICLE 9. ACCEPTANCE PER ASME SECTION III, NG-5360.
2. ALL WELDING PROCEDURES AND QUALIFICATIONS TO BE IN ACCORDANCE WITH ASME SECTION IX.
1. NEUTRON ABSORBER SHEETS TO PROVIDE MINIMUM AREAL DENSITY OF .025 g/cm² B10.

NOTES:

97	98	99	ITEM	NAME	MATERIAL	SPEC	DRAWING No.	DESCRIPTION
1	1	1	10	FLANGE	304 ST.STL.	ASTM A240		1/4 PLATE
4			9	CLADDING	304 ST.STL.	ASTM A240		26 GA SHEET
	4		8	CLADDING	304 ST.STL.	ASTM A240		26 GA SHEET
		4	7	CLADDING	304 ST.STL.	ASTM A240		26 GA SHEET
4			6	NEUTRON ABSORBER	BORAL	SEE NOTE 1		.075 SHEET
	4		5	NEUTRON ABSORBER	BORAL	SEE NOTE 1		.075 SHEET
		4	4	NEUTRON ABSORBER	BORAL	SEE NOTE 1		.075 SHEET
1			3	TUBING	304 ST.STL.	ASTM A240		18 GA SHEET
	1		2	TUBING	304 ST.STL.	ASTM A240		18 GA SHEET
		1	1	TUBING	304 ST.STL.	ASTM A240		18 GA SHEET
ASSY	ASSY	ASSY	QUANTITY					

UNLESS OTHERWISE STATED

DIMENSIONING AND TOLERANCING SHALL BE PER ASME Y14.5M-94, UNSPECIFIED DIMENSIONAL TOLERANCES ARE SHOWN BELOW.

ALL THREAD DEPTH CALLOUTS ARE TO BE CONSIDERED AS A MIN. DEPTH OF PERFECT THREADS. THE ACTUAL DEPTH OF THE THREADS IS NOT SUBJECT TO TOLERANCE CONTROLS.

XX	UNDER 3	± .005
	3-12	± .010
	OVER 12	± .020
XXX	UNDER 6	± .03
	6-18	± .03
	OVER 18	± .08
∠	ALL	± 1

FRACTIONAL ±1/8

ANGLES ±0.5°

WEIGHTS ARE APPROXIMATE AND ARE TO BE USED FOR HANDLING PURPOSES ONLY

ALL DIMENSIONS ARE IN INCHES

BORDER SIZE: F (40 X 28)

ALL UNSPECIFIED TOOL RADII .015 - .030

BREAK ALL SHARP CORNERS .015 - .030

MACHINED SURFACES TO BE ▽ OR BETTER

NEXT ASSEMBLY: 790-595

DRAWING TYPE: LICENSE

GROUP	NAME	DATE
PREPARED	R. Wilson	9-22-04
CHECKED	D. Dunn	9-23-04
PROJECT MANAGER	[illegible]	9/23/04
ENGINEERING	[illegible]	9/23/04
LICENSING	SC Shaffstall	9-23-04
QUALITY	B Bennett for KA	9/23/04

NAC INTERNATIONAL

PWR FUEL TUBE, NAC-UMS®

PROJECT	790	DRAWING	581	REV 9
SCALE FULL	WEIGHT	SH 1 OF 2		S. SHAW 9-22-2004

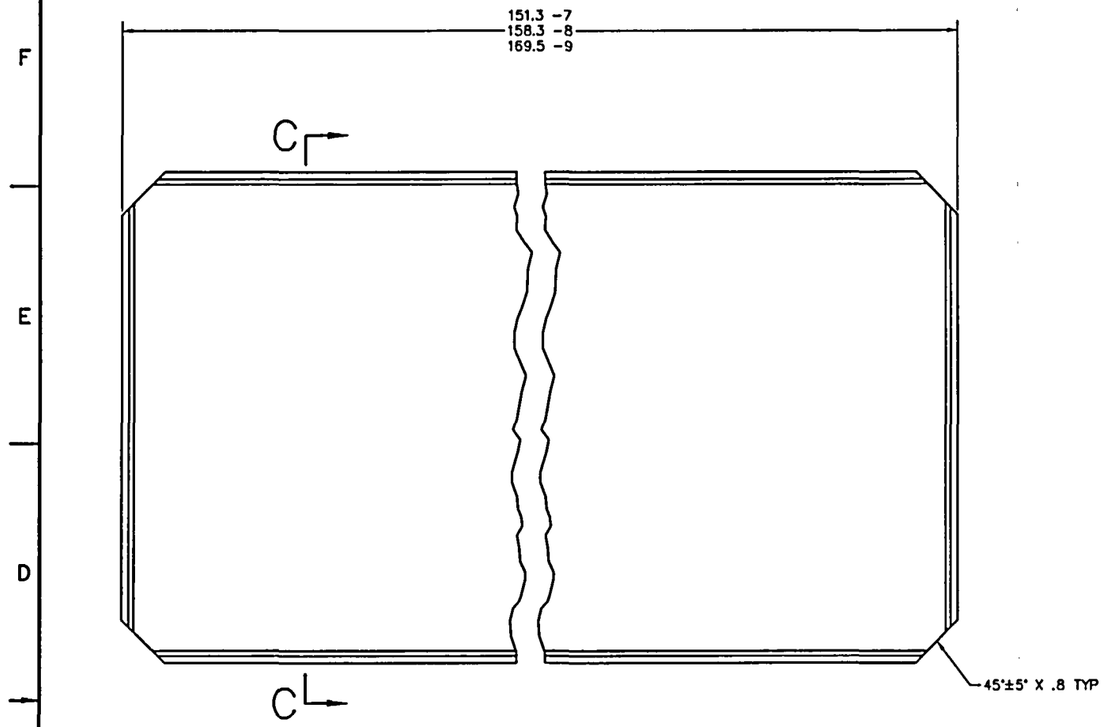

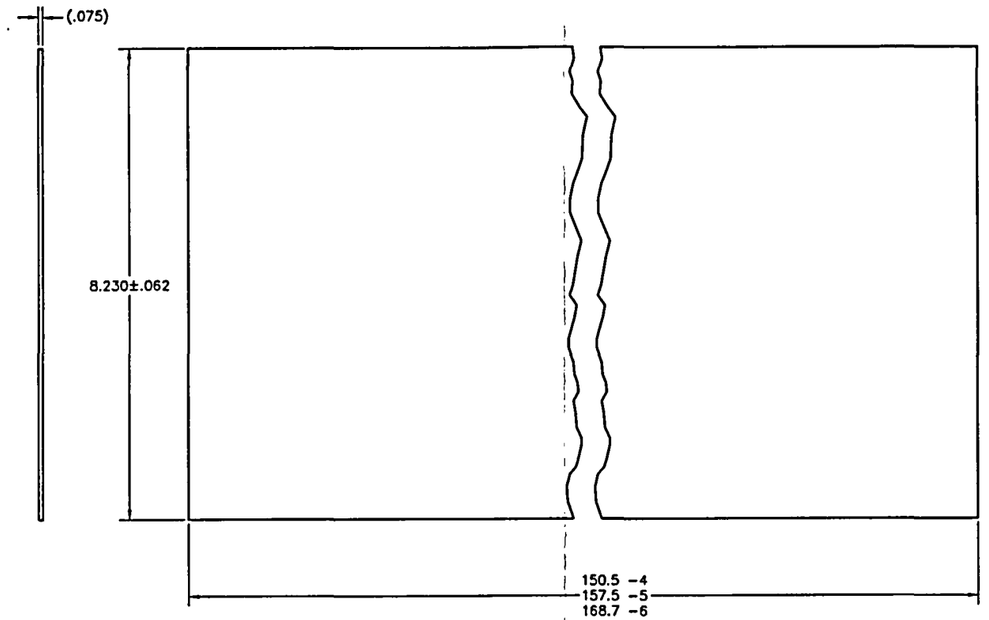

(7) CLADDING
(8) CLADDING
(9) CLADDING

(4) NEUTRON ABSORBER
(5) NEUTRON ABSORBER
(6) NEUTRON ABSORBER

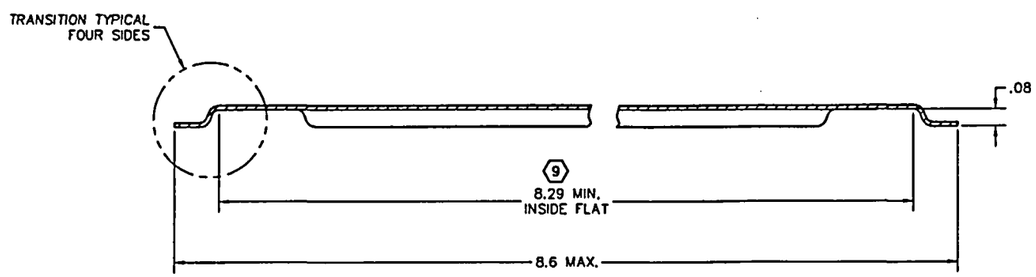

SECTION C—C
SCALE: 4/1
(ROTATED 90°)

NAC INTERNATIONAL

PWR FUEL TUBE,
NAC-UMS®

PROJECT	DRAWING	REV
790	581	9
SCALE FULL	SH 2 OF 2	8-23-2004

REV	CHANGE
0	INITIAL ISSUE
1	INC. DCR 0A
2	INC. DCR 1A
3	INC. DCR 2A
4	INC. DCR 3A
5	INC. DCR 4A
6	INC. DCR 5A
7	INC. DCR 6A
8	INC. DCR 7A
9	INC. DCR 8A
10	INC. DCR 9A,9B,9C
11	INC. DCR 10A,10B,10C,10D,10E
12	INC. DCR 11A,11B,11C
13	INC. DCR 12A,12B,12C
14	INC. DCR 13A,13B,13C,13D,13E,13F
15	INC. DCR 14A,14B,14C,14D
16	INC. DCR 15A
17	INC. DCR 16A
18	INC. DCR 17A

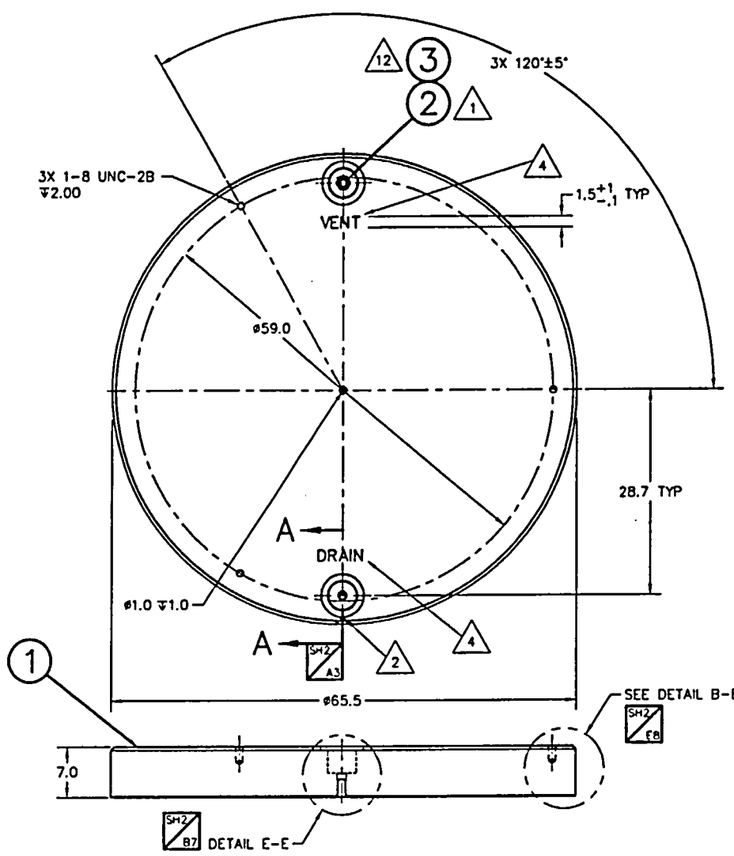

7 99 SHIELD LID ASSEMBLY

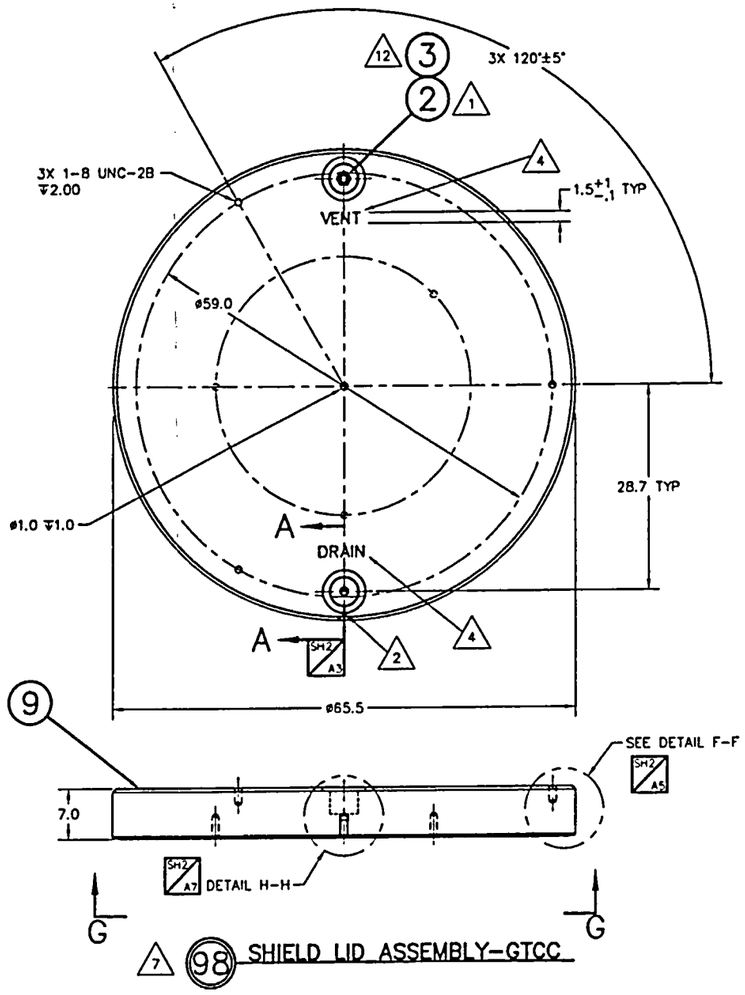

7 98 SHIELD LID ASSEMBLY-GTCC

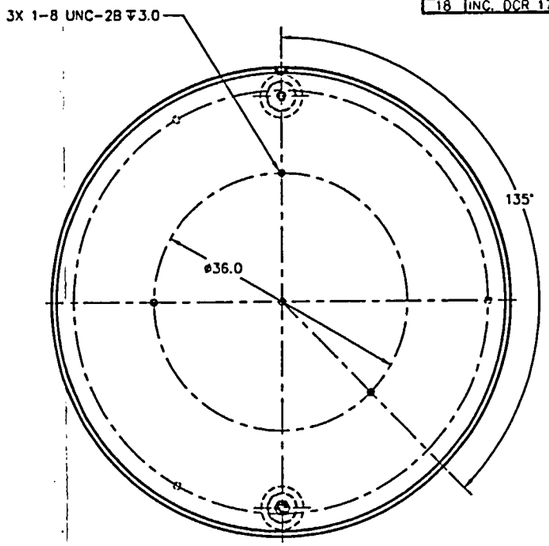

VIEW G-G

8. WELD PREPARATION SHALL BE DETERMINED BY THE FABRICATOR BASED UPON THE WELD PROCESS USED. SEE DRAWING 790-585 AND 790-612 FOR EFFECTIVE THROAT SIZE OF WELD.

7. FOR ITEMS 1, 4 AND 9, THE SA182 FORGING MATERIAL MUST HAVE YIELD AND ULTIMATE STRENGTHS EQUAL TO OR GREATER THAN THE SA240 PLATE MATERIAL.

6. MAY BE FABRICATED USING MULTIPLE SECTIONS. ALL SEAMS BETWEEN SECTIONS MUST BE FULL PENETRATION WELDED UPON ASSEMBLY.

5. STEEL STAMP/ENGRAVE 1/2" HIGH THE FOLLOWING SEQUENCE LOCATED APPROX. AS SHOWN. "UMS-TSC-XXX-YYY" WHERE XXX IS INDICATED ON THE PURCHASE ORDER FOR A PARTICULAR PROJECT CODE AND THE YYY IS A SEQUENTIAL SERIES OF NUMBERS STARTING WITH 001. "CALCULATED EMPTY CANISTER WEIGHT = ZZ,ZZZ LBS." WHERE ZZ,ZZZ IS INDICATED ON THE PURCHASE ORDER. DIRECTLY BELOW THIS NUMBER IS AN OPEN AREA FOR EACH CUSTOMER TO ADD ANY REQUIRED INFORMATION THEY CHOOSE.

4. METAL STAMP/ENGRAVE CHARACTERS APPROX. AS SHOWN X .03 DEEP, FILL WITH BLACK WEATHER RESISTANT PAINT.

3. LOCATION OF KEY SLOT IS TYPICAL ONE PLACE ONLY.

2. ENGRAVE DELTA .5" PER SIDE, OR CIRCLE .5" DIAMETER, X .03" DEEP, NOT TO INFRINGE ON THE WELD BEVEL, AND FILL WITH WEATHER RESISTANT BLACK PAINT.

1. LUBRICATE WITH A SPENT FUEL COMPATIBLE LUBRICANT SUCH AS NEOLUBE. INSTALL FITTING BY HAND UNTIL METAL TO METAL CONTACT IS ACHIEVED THEN TORQUE TO (115±5 FT-LBS FOR ELASTOMER SEALS) OR (135±15 FT-LBS FOR METAL SEALS).

NOTES:

15. SMALL INDENTATIONS AND IMPERFECTIONS ARE ALLOWED IN THE LAND OR GROOVE OF THE STRUCTURAL OR SHIELD LID WELD PREP, PROVIDING THAT THEY DO NOT ADVERSELY AFFECT THE WELDING PROCEDURES OR WELD PROCEDURE QUALIFICATIONS.

14. (DELETED)

13. (DELETED)

12. ITEM 3, SEAL TO BE SPECIFIED BY USER: ELASTOMER SEAL (VITON OR EPDM) OR A METAL SEAL.

11. TOOL MARKS AND OTHER MARKS ARE ACCEPTABLE ON ALL UNSPECIFIED MACHINED SURFACES AS LONG AS REQUIRED THICKNESS/DIAMETER OF ITEMS ARE MET.

10. ITEM 6, LID SUPPORT TO BE FIT-UP AND WELDED TO SHELL INSIDE DIAMETER IN A MANNER TO ASSURE MAINTENANCE OF THE 1" NOMINAL GAP.

9. MINIMUM OF .125 OF MATERIAL IS REQUIRED TO BE UNDERNEATH BOLT HOLE.

7	6	7	98	99	ITEM	NAME	MATERIAL	SPEC	DRAWING NO.	DESCRIPTION
		1		9		SHIELD LID-GTCC	304 ST. STL.	ASME SA240/SA182		PLATE/FORGING
				8		KEY	304 ST. STL.	ASTM A240/A276		1/2 PLATE/BAR
				7		SPACER RING	304 ST. STL.	ASME SA479/SA240		1/2 X 1/2 SQ. BAR/PLATE
				6		LID SUPPORT RING	304 ST. STL.	ASME SA479/SA240		1/2 X 1/2 SQ. BAR/PLATE
				5		COVER	304 ST. STL.	ASME SA479		BAR
				4		STRUCTURAL LID	304L ST. STL.	ASME SA240/SA182		PLATE/FORGING
		1	1	3		SEAL	SEE NOTE 12	COML		SEE NOTE 12
		1	1	2		NIPPLE	ST. STL.	COML		QUICK DISCONNECT COUPLING
		1	1	1		SHIELD LID	304 ST. STL.	ASME SA240/SA182		PLATE/FORGING
87	98	99								
ASSY	ASSY	ASSY								
QUANTITY										

NAC INTERNATIONAL

DETAILS, CANISTER NAC-UMS®

UNLESS OTHERWISE STATED	GROUP	NAME	DATE
DIMENSIONING AND TOLERANCING SHALL BE PER ASME Y14.5M-94	PREPARED		11-11-04
ALL THREAD DEPTH CALLOUTS ARE TO BE CONSIDERED AS A MIN. DEPTH OF PERFECT THREADS.	CHECKED		11-11-04
	PROJECT MANAGER		11-12-04
	ENGINEERING		11/15/04
ALL DIMENSIONS ARE IN INCHES	LICENSING		11/12/04
MACHINED SURFACES TO BE ▽ OR BETTER	QUALITY		11/16/04
NEXT ASSEMBLY: 790-585			
DRAWING TYPE: LICENSE			

PROJECT	DRAWING	REV
790	584	18
	SH 1 OF 3	11.21.06 11-11-2004

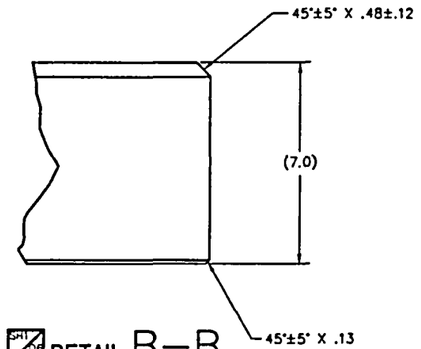

SH1 D6 C3 DETAIL B–B

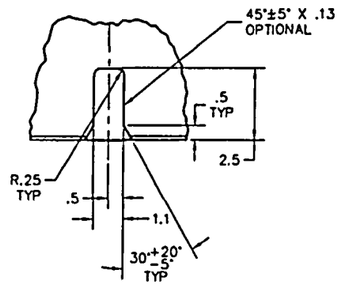

3 DETAIL E–E SH1 C7

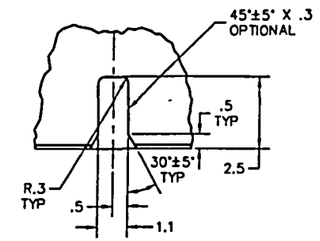

3 DETAIL H–H SH1 C5
(GTCC AND TSC LIDS)

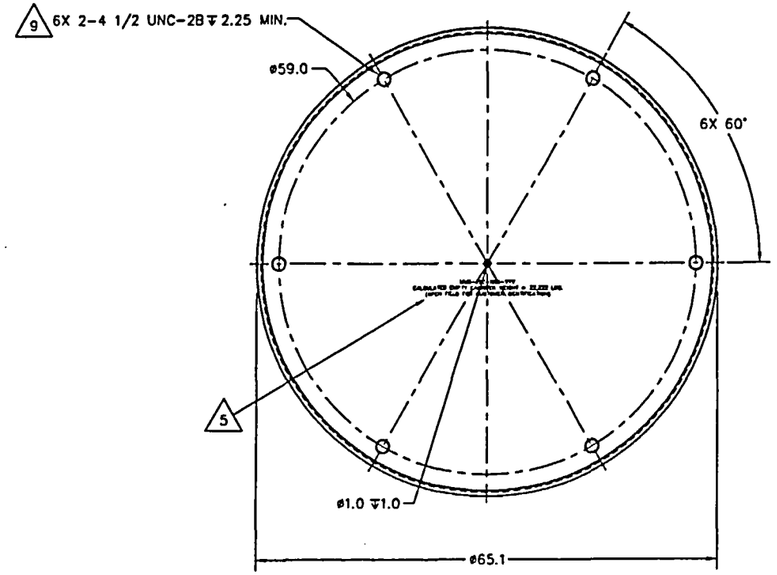

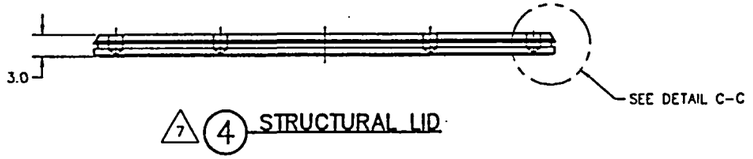

7 4 STRUCTURAL LID

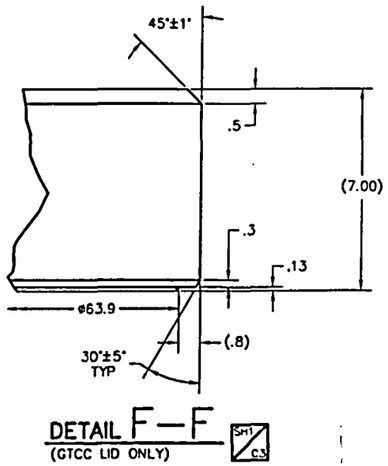

DETAIL F–F SH1 C3
(GTCC LID ONLY)

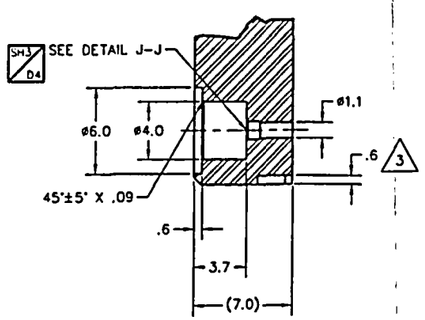

SECTION A–A SH1 D4 D7

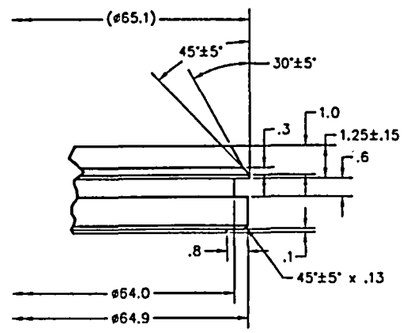

DETAIL C–C

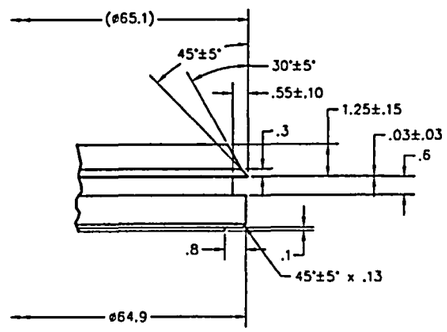

DETAIL C–C
(ALTERNATE WELD PREP)

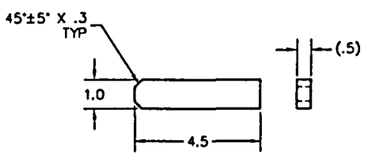

8 KEY

NAC INTERNATIONAL

DETAILS,
CANISTER
NAC-UMS®

PROJECT	DRAWING	REV
790	584	18
	SH 2 OF 3	11-22-04

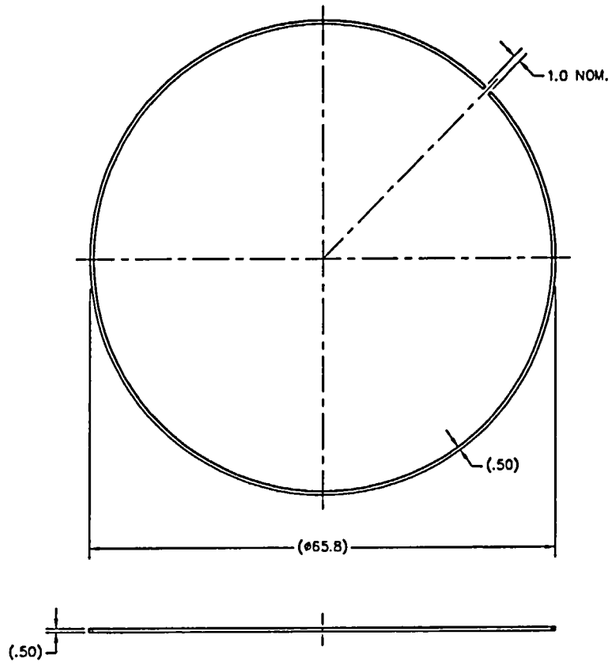

△10 △8 △6 (6) LID SUPPORT RING

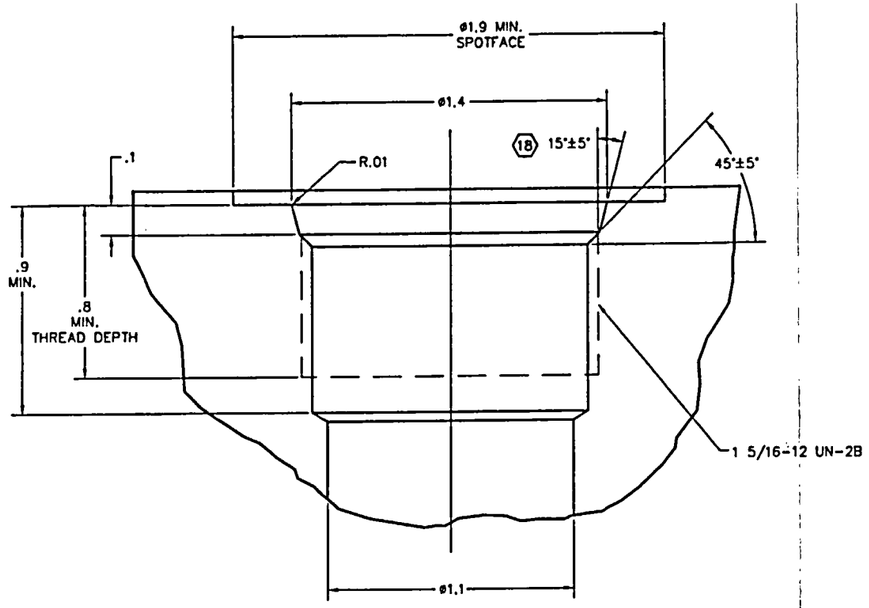

SH2 B4 DETAIL J—J

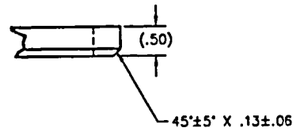

DETAIL D—D

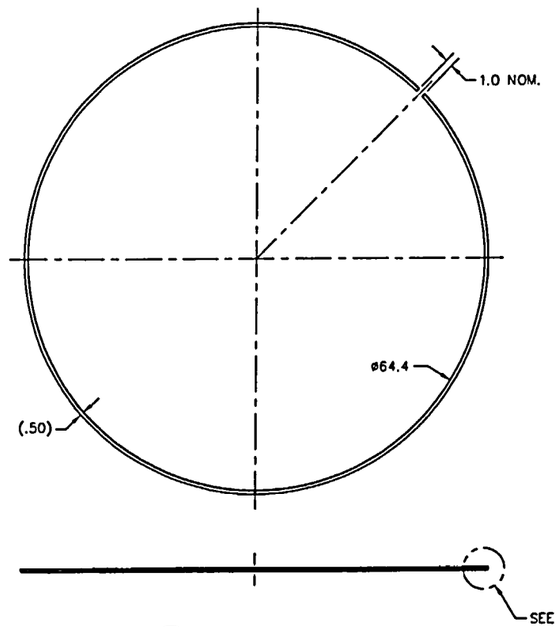

△6 (7) SPACER RING

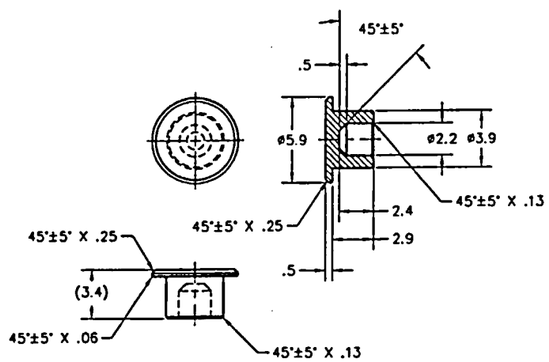

(5) COVER

NAC INTERNATIONAL

DETAILS,
CANISTER
NAC-UMS®

PROJECT	DRAWING	REV
790	584	18
	SH 3 OF 3	11:32AM 11-11-2004

REV	CHANGE
0	INITIAL ISSUE
1	INC DCR 0A
2	INC DCR SAR-001-0A
3	INC DCR 2A
4	INC DCR 3A
5	INC DCR 4A
6	INC DCR 5A
7	INC DCR 6A
8	INC DCR 7A,7B,7C
9	INC DCR 8A
10	INC DCR 9A,9B,9C
11	INC DCR 10A,10B,10C,10D,10E
12	INC DCR 11A
13	INC DCR 12A,12B,12C
14	INC DCR 13B,13C,13D,13E
15	INC DCR 14A,14B,14C
16	INC DCR 15A
17	INC DCR 16A
18	INC DCR 17A

(18) 12. DELETED

11. FIELD INSTALLED CODE NAMEPLATES SHALL BE LOCATED ON THE STRUCTURAL LID AS DIRECTED BY THE CLIENT. CODE NAMEPLATES TO BE WELDED TO THE STRUCTURAL LID WITH FOUR FILLET TACK WELDS 1/4 INCH LONG (MINIMUM), ONE ADJACENT TO EACH CORNER OF THE PLATE. FILLET WELD SIZE TO BE EQUAL TO THE THICKNESS OF THE NAMEPLATE.

(10) AT THE OPTION OF THE USER, SPACER SHIMS (DRAWING 790-587) MAY BE USED TO ADJUST THE STACK HEIGHT OF THE STRUCTURAL LID AND ENSURE THAT THE TOP OF THE LID IS AT EITHER LEVEL WITH THE TOP OF THE CANISTER OR EXTENDS PAST THE TOP EDGE OF THE CANISTER, SO LONG AS THE THE MIN. EFFECTIVE WELD THROAT IS MAINTAINED FOR THE CLOSURE WELD.

(9) AT THE OPTION OF THE USER, STAINLESS STEEL (ASTM/ASME A/SA240, TYPE 304/304L) SHIMS OF APPROPRIATE THICKNESS MAY BE USED IN THE WELDING OF THE SHIELD LID (ITEM 17) TO THE SHELL WELDMENT (ITEMS 1-5).

(8) ITEMS 22 AND 24 SHALL BE FIELD MODIFIED IF REQUIRED TO FIT FLUSH OR BELOW THE TOP SURFACE OF THE RESPECTIVE LID DURING INSTALLATION. ITEM 24 MAY BE GROUND TO FACILITATE A PRESS FIT DURING INSTALLATION. ITEM 23 IS TO BE INSTALLED FOR THE STORAGE CONFIGURATION (790-590) AND IS TO BE REMOVED FOR THE TRANSPORT CONFIGURATION (790-516).

(7) PT FINAL SURFACE. EXAMINED PER ASME SECTION V, ARTICLE 6. ACCEPTANCE PER ASME SECTION III, ARTICLE NB-5350.

(6) AT THE OPTION OF THE USER, STAINLESS STEEL SHIMS (ASME SA240/479, TYP 304L) OF APPROPRIATE THICKNESS MAY BE USED IN THE WELDING OF THE STRUCTURAL LID (ITEM 19) TO THE SHELL WELDMENT (ITEM 1-5).

(5) PT ROOT AND FINAL SURFACE. SHOULD ROOT AND FINAL SURFACE BE ONE AND THE SAME (i.e. SINGLE PASS WELD) THEN ONLY ONE PT EXAMINATION IS REQUIRED. EXAMINED PER ASME SECTION V, ARTICLE 6, ACCEPTANCE PER ASME SECTION III, ARTICLE NB-5350.

(4) AFTER INSTALLING BASKET (ITEMS 6-10), POSITION KEY (ITEM 21) IN SLOT AT TOP OF BASKET, AS SHOWN, AND TACK WELD KEY TO SIDE OF SHELL (ITEMS 1-5). INSTALL LID SUPPORT RING (ITEM 16), AS SHOWN, AND WELD TO SHELL AND KEY. INSTALL SHIELD ASSEMBLY (ITEM 17), LOCATING ON KEY.

(18) (3) LUBRICATE WITH A SPENT FUEL COMPATIBLE LUBRICANT SUCH AS NEOLUBE. INSTALL FITTING BY HAND UNTIL METAL TO METAL CONTACT IS ACHIEVED THEN TORQUE TO (115±5 FT-LBS FOR ELASTOMER SEALS) OR (135±15 FT-LBS FOR METAL SEALS). LENGTH MAY BE ADJUSTED IN THE FIELD TO ALLOW FOR STACK UP CONDITIONS.

(2) PT ROOT, EACH SUCCESSIVE 3/8 INCH WELD THICKNESS, AND FINAL SURFACE. EXAMINE PER ASME SECTION V, ARTICLE 6. ACCEPTANCE PER ASME SECTION III, ARTICLE NB-5350; OR, UT PER ASME SECTION V, ARTICLE 5. ACCEPT PER ASME SECTION III, ARTICLE NB-5330 IN CONJUNCTION WITH PT EXAMINATION PER NOTE 5.

1. PACKAGE SHOWN FULLY ASSEMBLED. WELD SYMBOLS ARE FOR REFERENCE ONLY. REFERENCE PROCEDURE FOR OPERATIONAL ASSEMBLY SEQUENCE.

NOTES:

(21) FOR ASSEMBLIES 98 AND 97 (BWR) WELD SIZE IS (1/2), FOR ASSY 99, 96, AND 95 (PWR) WELD SIZE IS (3/8).

(20) FOR ASSEMBLIES 98 AND 97 (BWR) WELD SIZE IS (7/8), FOR ASSY 99, 96, AND 95 (PWR) WELD SIZE IS (3/4).

(18) 19. DELETED

(18) WELD NOT TO EXCEED TOP SURFACE OF ITEM 17 (SHIELD LID ASSY)

17. AFTER SHIELD LID WELDING, TSC SHELLS MAY BE RE-ROUNDED BY MECHANICAL METHODS OR TOOLING. IF RE-ROUNDING IS PERFORMED, THE EXAMINATION OF THE SHIELD LID FINAL WELD SURFACE, PRESSURE TEST AND LEAK TEST SHALL BE PERFORMED, AFTER ALL RE-ROUNDING ACTIVITIES ARE COMPLETED.

16. AT THE OPTION OF THE USER, STAINLESS STEEL (ASTM/ASME A/SA240 TYPE 304/304L) SHIMS OF APPROPRIATE SIZE AND THICKNESS MAY BE USED IN THE SPACER RING GROOVE IN THE STRUCTURAL LID TO ENSURE THE BAR FITS TIGHTLY AGAINST THE TOP OF THE GROOVE AT THE BOTTOM OF THE WELD JOINT.

15. THE STRUCTURAL LID AND INSTALLED SPACER RING CAN BE FIELD DRESSED IN LOCALIZED AREAS TO ELIMINATE INTERFERENCE WITH THE CANISTER SHELL DURING INSTALLATION OF THE LID.

(18) 14. FOR ASME CODE STAMPED TSC's, THE GROOVE WELD FROM THE TOP OF THE STRUCTURAL LID ROOT PASS WELD TO THE SHORTEST DISTANCE OF THE FINISHED WELD PROFILE SHALL BE AT LEAST 0.72", FOR MAINE YANKEE CANISTER ONLY.

13. INSPECTION OF COLD STACK-UP OF THE SHIELD AND STRUCTURAL LIDS MUST BE PERFORMED PRIOR TO COMMENCEMENT OF FIELD WELDING. THE STRUCTURAL LID MAY RANGE FROM UP TO .180" BEYOND THE TOP EDGE OF THE CANISTER SHELL OR BE LOCATED BELOW THE TOP EDGE OF THE CANISTER SHELL UP TO 0.030". THIS INSPECTION MAY EITHER BE PERFORMED AT THE FABRICATOR'S FACILITY OR IN THE FIELD.

95 ASSY	96 ASSY	97 ASSY	98 ASSY	99 ASSY	ITEM	NAME	MATERIAL	SPEC	DRAWING No.	DESCRIPTION
			QUANTITY							
2	2	2	2	2	24	DOWEL PIN	ST. STL.	COML.		1.0 DIA X 1.0 LONG
6	6	6	6	6	23	STRUCTURAL LID PLUG	304 ST. STL.	ASTM A276		2 DIA BAR
3	3	3	3	3	22	SHIELD LID PLUG	304 ST. STL.	ASTM A276		1 DIA BAR
1	1	1	1	1	21	KEY			790-584-8	
1	1	1	1	1	20	SPACER RING			790-584-7	
1	1	1	1	1	19	STRUCTURAL LID			790-584-4	
2	2	2	2	2	18	COVER			790-584-5	
1	1	1	1	1	17	SHIELD LID ASSY			790-584-99	
1	1	1	1	1	16	LID SUPPORT RING			790-584-6	
				1	15	DRAIN TUBE ASSY			790-583-99	
			1		14	DRAIN TUBE ASSY			790-583-98	
		1			13	DRAIN TUBE ASSY			790-583-97	
	1				12	DRAIN TUBE ASSY			790-583-96	
1					11	DRAIN TUBE ASSY			790-583-95	
1					10	FUEL BASKET ASSY			790-595-99	PWR - CANISTER CLASS 1
	1				9	FUEL BASKET ASSY			790-595-98	PWR - CANISTER CLASS 2
		1			8	FUEL BASKET ASSY			790-570-99	BWR - CANISTER CLASS 4
			1		7	FUEL BASKET ASSY			790-570-98	BWR - CANISTER CLASS 5
				1	6	FUEL BASKET ASSY			790-595-97	PWR - CANISTER CLASS 3
				1	5	SHELL WELDMENT			790-582-99	
			1		4	SHELL WELDMENT			790-582-98	
		1			3	SHELL WELDMENT			790-582-97	
	1				2	SHELL WELDMENT			790-582-96	
1					1	SHELL WELDMENT			790-582-95	

UNLESS OTHERWISE STATED
DIMENSIONING AND TOLERANCING SHALL BE PER ASME Y14.5M-94
ALL THREAD DEPTH CALLOUTS ARE TO BE CONSIDERED AS A MIN. DEPTH OF PERFECT THREADS.
ALL DIMENSIONS ARE IN INCHES
MACHINED SURFACES TO BE 125 OR BETTER
NEXT ASSEMBLY: 790-590/516
DRAWING TYPE: LICENSE

GROUP	NAME	DATE
PREPARER		11/1/04
CHECKER	R. Walker	11-1-04
PROJECT ENGINEER	K. Shedenhelm JD	11-12-04
ENGINEERING		11/15/04
LICENSING	Anthony L Pietz	11/12/04
QUALITY	[illegible]	11/16/04

NAC INTERNATIONAL

TRANSPORTABLE STORAGE CANISTER, (TSC) NAC-UMS®

PROJECT 790 | DRAWING 585 | REV 18 | SH 1 OF 3

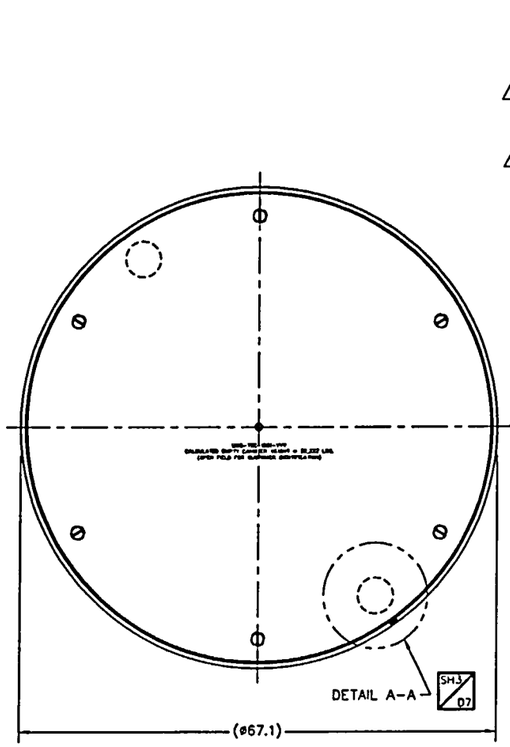

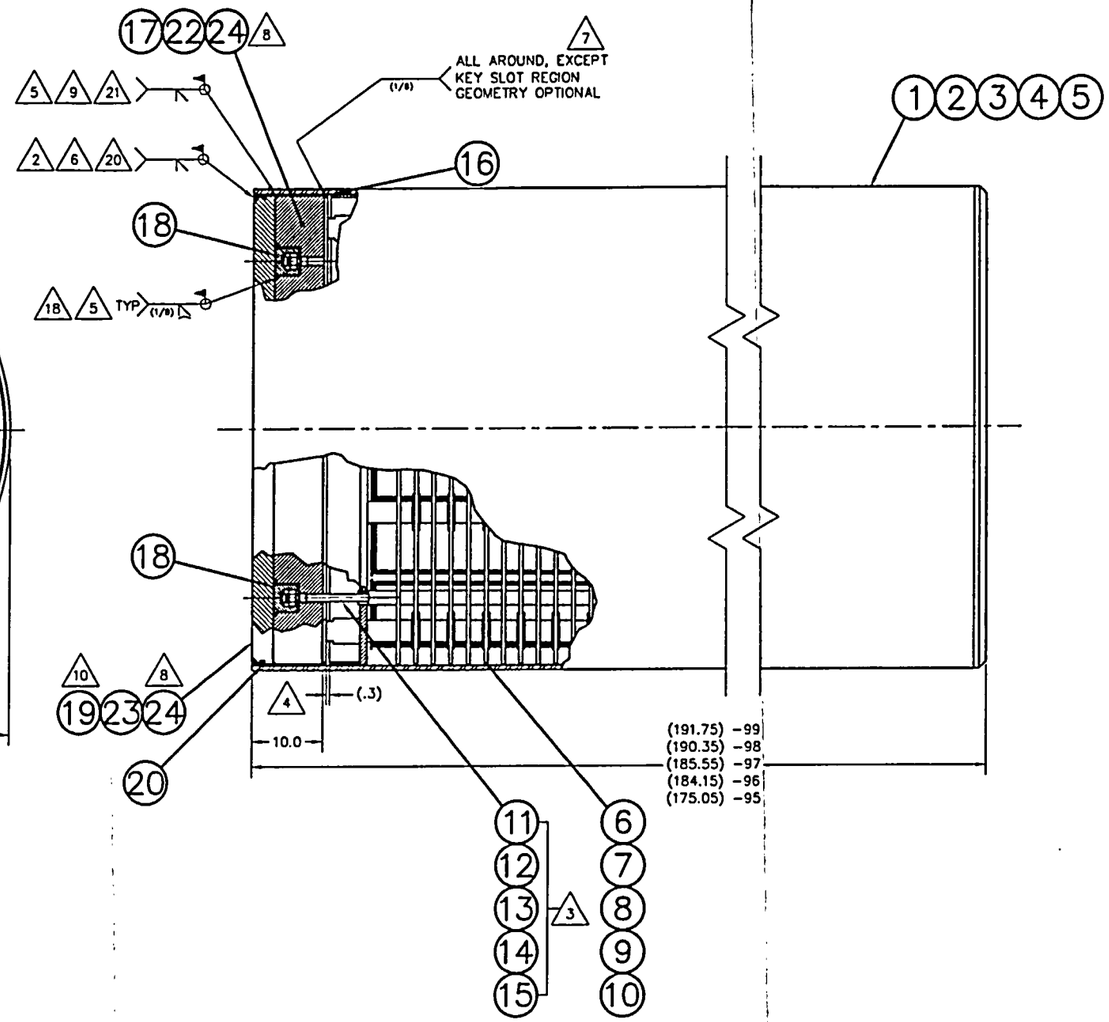

NAC INTERNATIONAL

TRANSPORTABLE STORAGE CANISTER, (TSC)
NAC-UMS®

PROJECT	DRAWING	REV
790	585	18
	SH 2 OF 3	

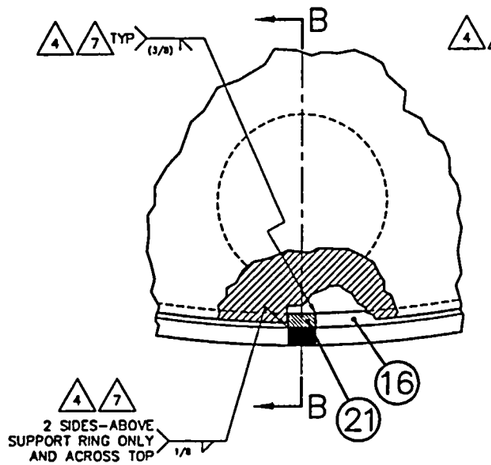

SH2 C6 DETAIL A—A
VIEW ROTATED
OPTIONAL ENGRAVED STRIPE SHOWN

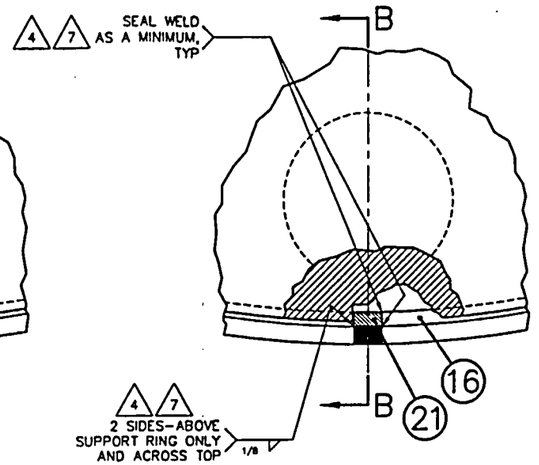

SH2 C6 DETAIL A—A
VIEW ROTATED
ALTERNATE CONFIGURATION
OPTIONAL ENGRAVED STRIPE SHOWN

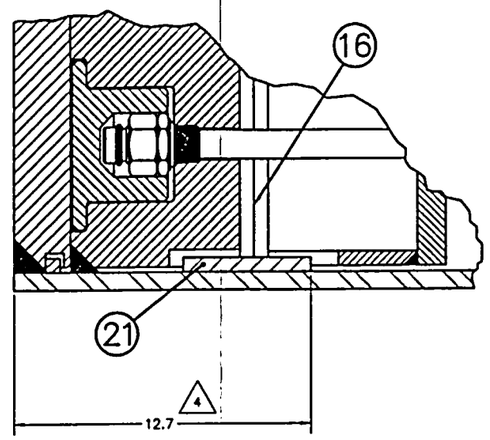

SECTION B—B

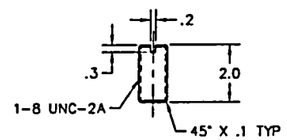

8 22 SHIELD LID PLUG

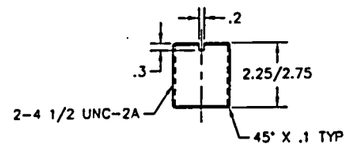

8 23 STRUCTURAL LID PLUG

NAC INTERNATIONAL

TRANSPORTABLE STORAGE CANISTER, (TSC)
NAC-UMS®

PROJECT	DRAWING	REV
790	585	18
	SH 3 OF 3	7-30PM 11-11-2004

REV	CHANGE
0	INITIAL ISSUE
1	INC DCR 0A
2	INC DCR 1A
3	INC DCR 2A
4	INC DCR 3A
5	INC DCR 4A
6	INC DCR 5A
7	INC DCR 6A
8	INC DCR 7A
9	INC DCR 8A
10	INC DCR 9A
11	INC DCR 10A

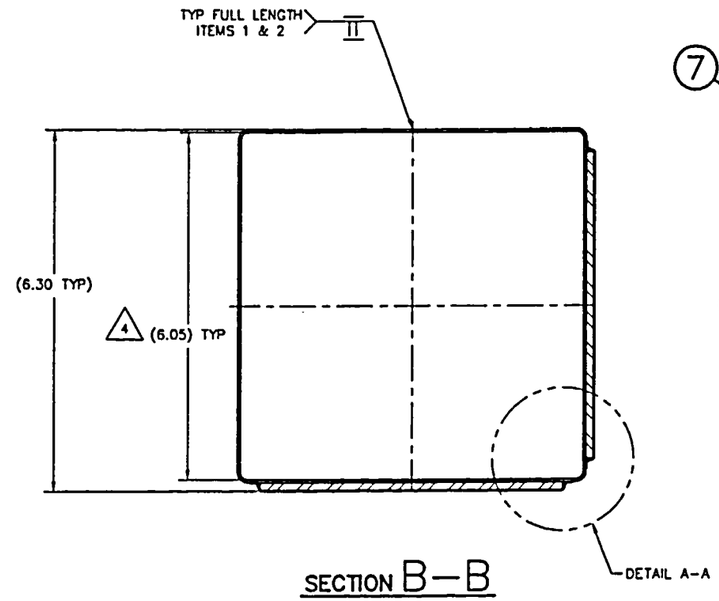

SECTION B–B

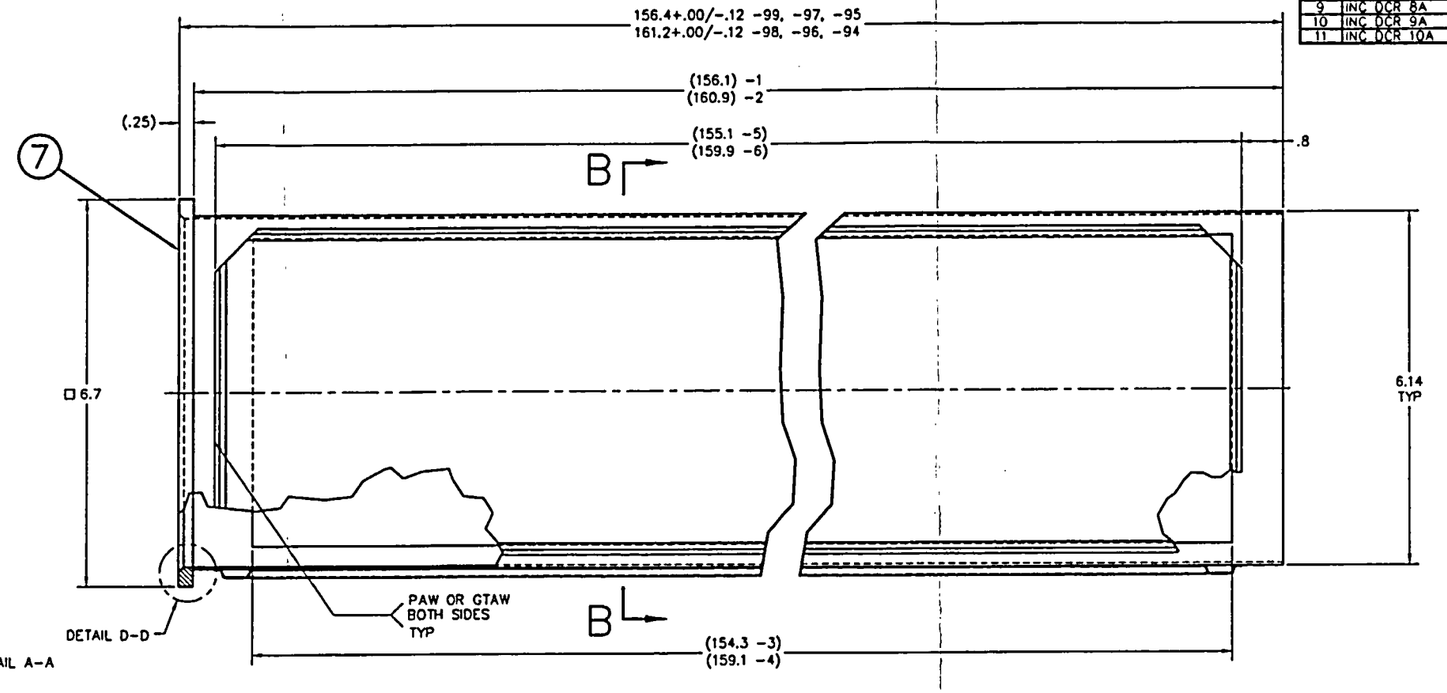

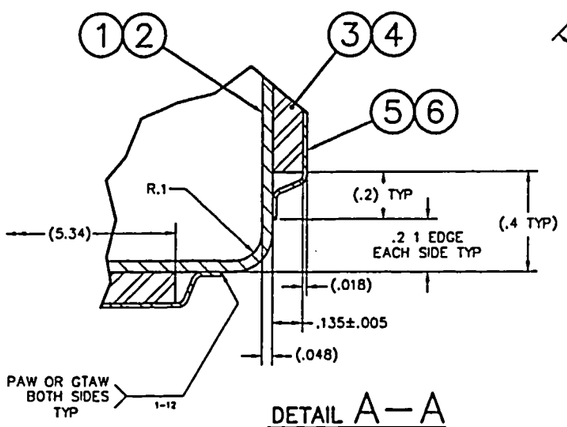

DETAIL A–A
SCALE: 4/1

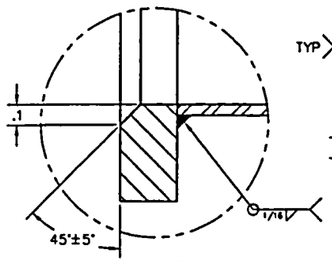

DETAIL D–D
SCALE: 4:1

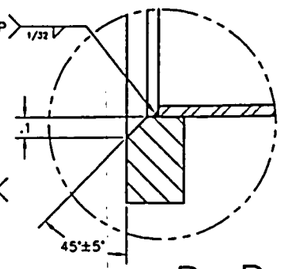

DETAIL D–D
SCALE: 4:1
(ALTERNATE FABRICATION)

98 99 TUBE ASSEMBLY
NEUTRON ABSORBER (2) SIDES

96 97 TUBE ASSEMBLY
NEUTRON ABSORBER (1) SIDE

94 95 TUBE ASSEMBLY
NO NEUTRON ABSORBER

4 INSIDE OPENING TO BE GAGED MIN. 5.95" SQUARE X 12' LONG

3. VISUALLY INSPECT (VT) ALL WELDS IN ACCORDANCE WITH ASME SECTION V, ARTICLE 9. ACCEPTANCE PER ASME SECTION III, NG-5360.

2. ALL WELDING PROCEDURES AND QUALIFICATIONS TO BE IN ACCORDANCE WITH ASME SECTION IX.

1. NEUTRON ABSORBER SHEETS TO PROVIDE MINIMUM AREAL DENSITY OF 0.011 g/cm² B10.

NOTES:

94	95	96	97	98	99	ITEM	NAME	MATERIAL	SPEC	DRAWING No.	DESCRIPTION
1	1	1	1	1	1	7	FLANGE	304 ST.STL.	ASTM A240		1/4 PLATE
		1		2		6	CLADDING	304 ST.STL.	ASTM A240		26 GA SHEET
		1		2		5	CLADDING	304 ST.STL.	ASTM A240		26 GA SHEET
		1		2		4	NEUTRON ABSORBER	BORAL	SEE NOTE 1		.135 SHEET
		1		2		3	NEUTRON ABSORBER	BORAL	SEE NOTE 1		.135 SHEET
1		1		1		2	TUBING	304 ST.STL.	ASTM A240		18 GA SHEET
	1		1		1	1	TUBING	304 ST.STL.	ASTM A240		18 GA SHEET
ASSY	ASSY	ASSY	ASSY	ASSY	ASSY	QUANTITY					

11

UNLESS OTHERWISE STATED
DIMENSIONING AND TOLERANCING SHALL BE PER ASME Y14.5M-94, UNSPECIFIED DIMENSIONAL TOLERANCES ARE SHOWN BELOW.
ALL THREAD DEPTH CALLOUTS ARE TO BE CONSIDERED AS A MIN. DEPTH OF PERFECT THREADS. THE ACTUAL DEPTH OF THE THREADS IS NOT SUBJECT TO TOLERANCE CONTROLS.

.XX	UNDER 3	± .063
	3–12	± .008
	OVER 12	± .010
.XXX	UNDER 6	± .032
	6–18	± .03
	OVER 18	± .05
.X	ALL	± .1
FRACTIONAL ± 1/8		
ANGLES ± 0.5°		

WEIGHTS ARE APPROXIMATE AND ARE TO BE USED FOR HANDLING PURPOSES ONLY
ALL DIMENSIONS ARE IN INCHES
BORDER SIZE: F (40 X 28)
ALL UNSPECIFIED TOOL RADII .015 – .030
BREAK ALL SHARP CORNERS .015 – .030
MACHINED SURFACES TO BE 125 OR BETTER
NEXT ASSEMBLY: 790-570
DRAWING TYPE: LICENSE

GROUP	NAME	DATE
PREPARED	R. Walker	9-22-04
CHECKED	D. Dorr	9-23-04
PROJECT MANAGER	[illegible]	9/23/04
ENGINEERING	[illegible]	9/23/04
LICENSING	TC Thoroughman	9-23-04
QUALITY	[illegible]	9/23/04

NAC INTERNATIONAL

BWR FUEL TUBE,
OVER-SIZED FUEL,
NAC-UMS®

PROJECT	790	DRAWING	605	REV 11
SCALE 1/1	WEIGHT	SH 1 OF 2	9-27-2004	

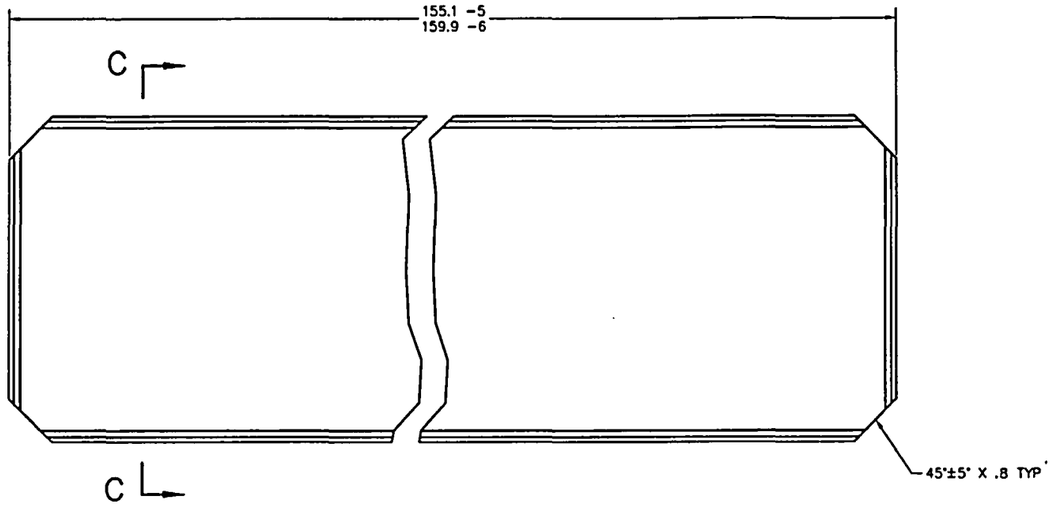

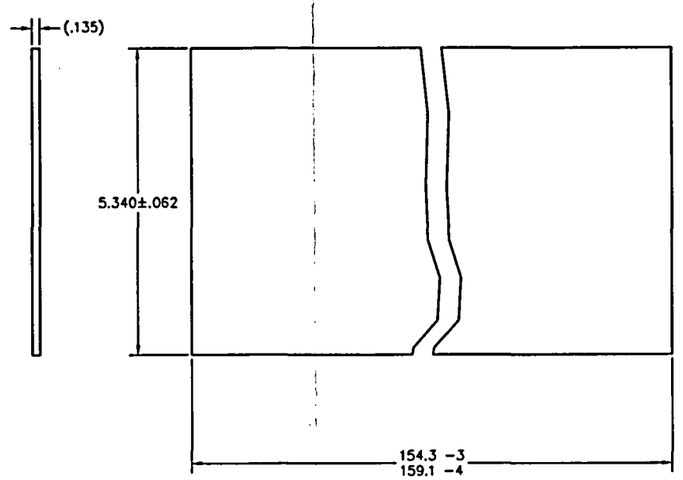

(5) CLADDING
(6) CLADDING

(3) NEUTRON ABSORBER
(4) NEUTRON ABSORBER

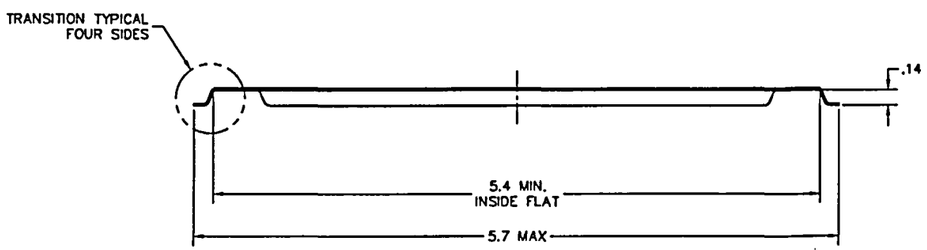

SECTION C–C
SCALE: 2/1
(ROTATED 90°)

NAC INTERNATIONAL

BWR FUEL TUBE,
OVER–SIZED FUEL,
NAC–UMS®

PROJECT	DRAWING	REV
790	605	11
SCALE 1/1	SH 2 OF 2	8-22-2006

REV	CHANGE
0	INITIAL ISSUE
1	INC DCR 0A
2	INC DCR 1A,1B
3	INC DCR 2A

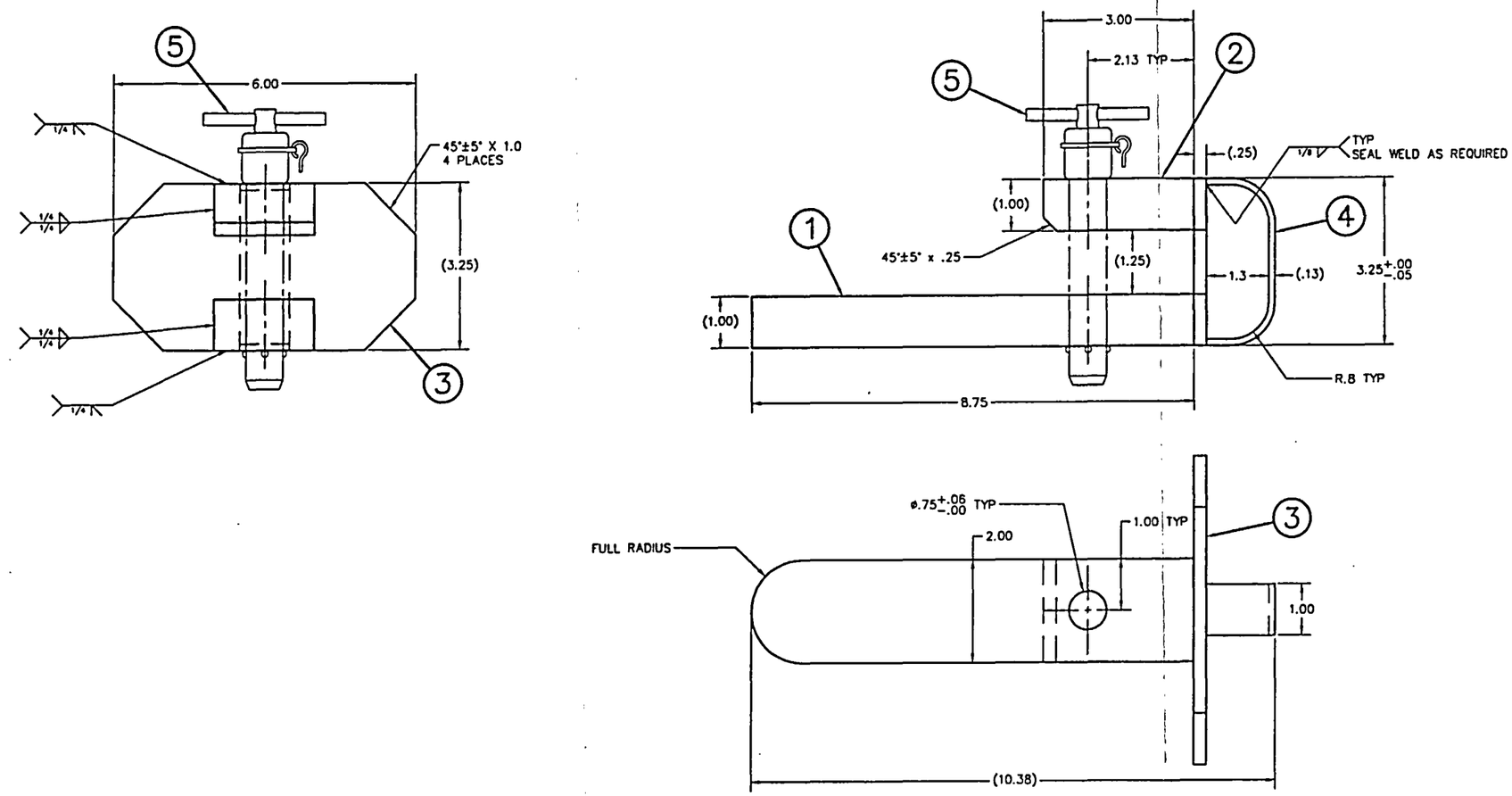

99 DOOR STOP

97 ASSY	98 ASSY	99 ASSY	ITEM	NAME	MATERIAL	SPEC	DRAWING No.	DESCRIPTION
		1	6	ATTACHMENT SCREW	ST. STL.	COML		10-32 UNC-2A 1/2 LG
		1	5	LOCK PIN	ST. STL.	COML		SEE NOTE 2
		1	4	HANDLE	304 ST. STL.	ASTM A240/A276		1/8 PLATE/BAR
		1	3	BACK PLATE	304 ST. STL.	ASTM A240		1/4 PLATE
		1	2	TOP PLATE	304 ST. STL.	ASTM A240/A276		1 PLATE/BAR
		1	1	BOTTOM PLATE	304 ST. STL.	ASTM A240/A276		1 PLATE/BAR

QUANTITY

2. CARRLANE #CL-12-BPDT-3.25-S-4BALL-C OR McMASTER-CARR #93750A910

1 ITEM 6 TO BE FIELD LOCATED AND INSTALLED FOR CABLE.

NOTE:

UNLESS OTHERWISE STATED
DIMENSIONING AND TOLERANCING SHALL BE PER ASME Y14.5M-94
ALL THREAD DEPTH CALLOUTS ARE TO BE CONSIDERED AS A MIN. DEPTH OF PERFECT THREADS.
ALL DIMENSIONS ARE IN INCHES
MACHINED SURFACES TO BE 1/2 OR BETTER
NEXT ASSEMBLY: N/A
DRAWING TYPE: LICENSE

GROUP	NAME	DATE
PREPARER	[signature]	11-11-04
CHECKER	R. Wallace	11-11-04
PROJECT MANAGER	K. Hoedemaeker for JD	11-12-04
ENGINEERING	[signature]	11/15/04
LICENSING	Anthony L Pate	11/12/04
QUALITY	[signature] for HS	11/16/04

NAC INTERNATIONAL

DOOR STOP
NAC-UMS®

PROJECT 790 | DRAWING 617 | REV 3 | SH 1 OF 2

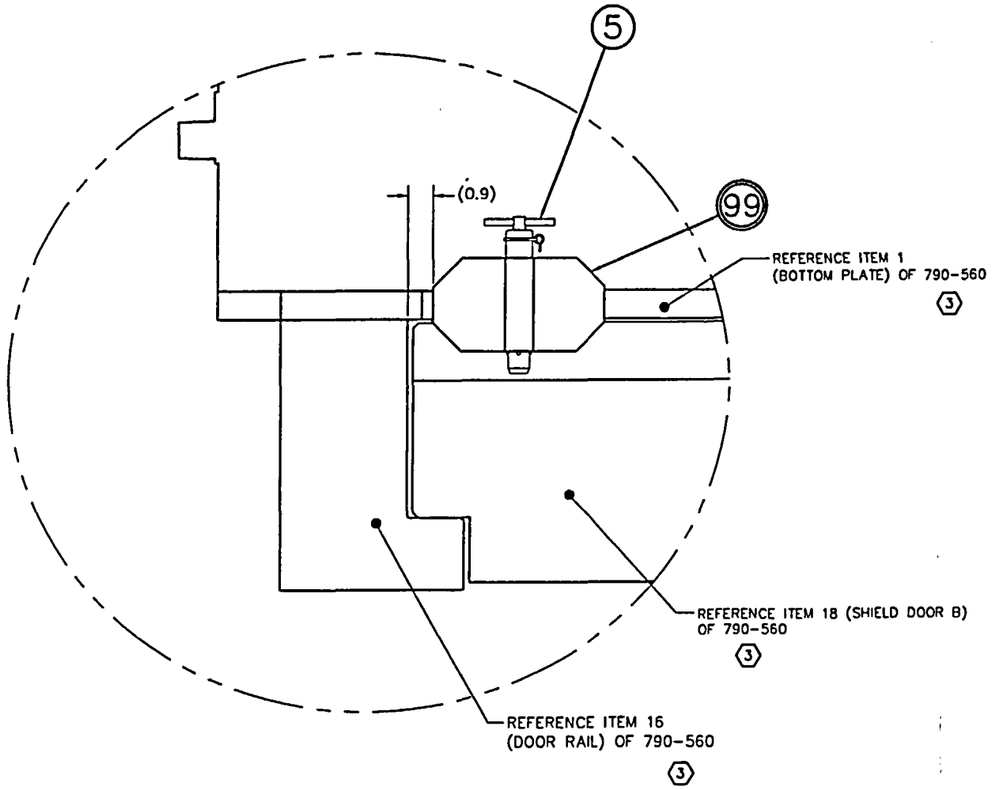

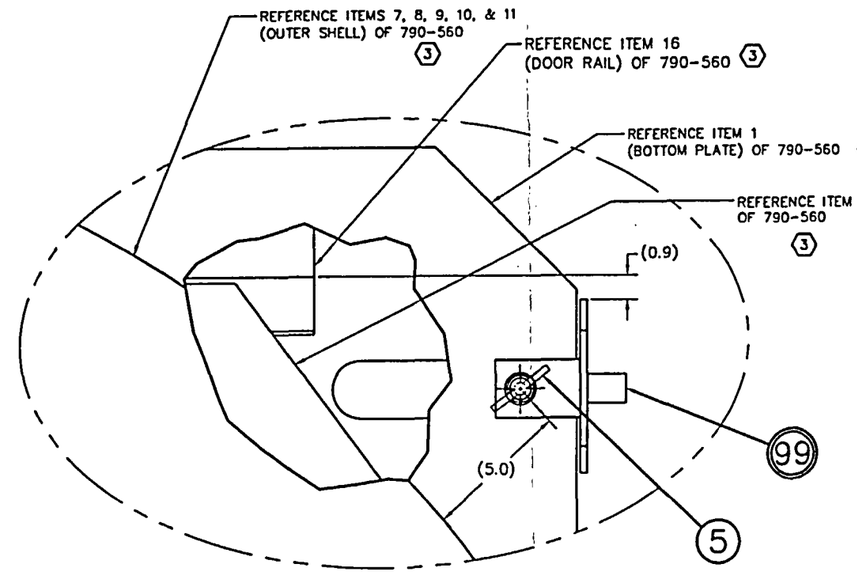

NAC INTERNATIONAL

DOOR STOP
NAC-UMS®

PROJECT	DRAWING	REV
790	617	3
	SH 2 OF 2	

REV	CHANGE
0	INITIAL ISSUE
1	INC DCR 0A
2	INC DCR 1A
3	INC DCR 2A,2B
4	INC DCR 3A,3B,3C
5	INC DCR 4A

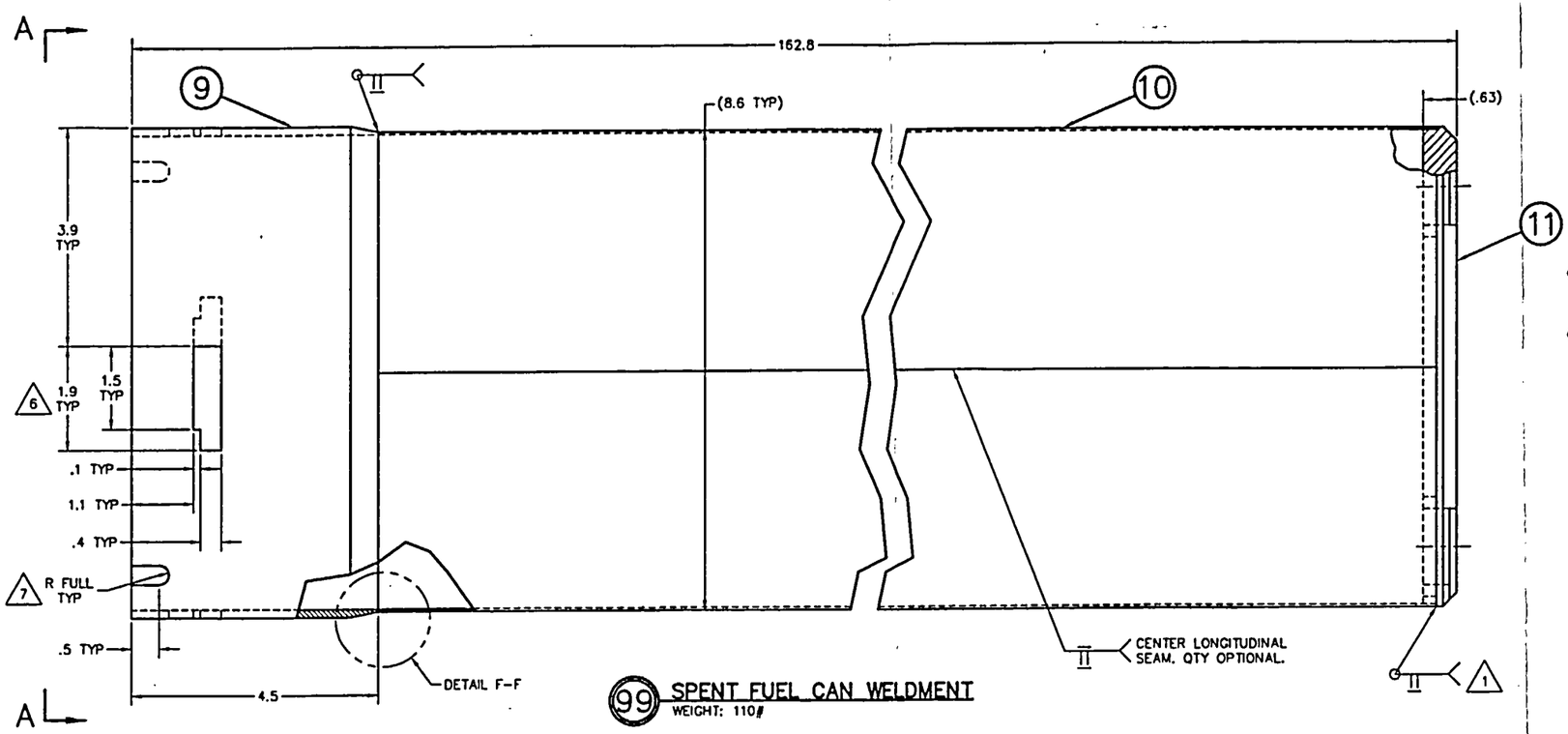

99 SPENT FUEL CAN WELDMENT
WEIGHT: 110#

5 9. VISUALLY INSPECT (VT) ALL WELDS IN ACCORDANCE WITH ASME SECTION V, ARTICLE 9. ACCEPTANCE PER ASME SECTION III, NG-5360.

5 8. ALL WELDING PROCEDURES AND QUALIFICATIONS TO BE IN ACCORDANCE WITH ASME SECTION IX.

7. CORNERS MAY BE ROUNDED PROVIDED THE SLOT OPENING DOES NOT EXCEED 0.5

6. BREAK ALL INTERIOR EDGES OF SLOT.

5. FOR ITEM 4 WIPER MATERIAL IS 6061-T6 ALUMINUM ASTM B209, .032 SHEET OR ITEM 4 ALTERNATE WIPER IS ST. STL. COMMERCIAL, .005-.008 (.127-.203MM) SHEET/STRIP, MATERIAL FOR ST. STL. WIPER TO HAVE A MINIMUM YIELD STRENGTH OF 100KSI.

4. THE CORRESPONDING DESIGN DRAWING FOR THE ALTERNATE CONFIGURATION IS 412-109.

3. MACHINE ITEM 20, BOTTOM ASSEMBLY, FOR SLIP FIT OF ITEM 19, TUBE BODY.

2. MACHINE ITEM 1, FOR LIGHT PRESS FIT WITH ITEM 8 OR 17, BOTTOM PLATE. THE THICKNESS OF ITEM 1 IS MAINTAINED SO THAT IT IS FLUSH WITH ITEM 8 OR 17 WHEN THE SCREENS ARE IN PLACE AND THE TWO ITEMS ARE WELDED TOGETHER.

1. MACHINE ITEM 11, BOTTOM ASSEMBLY, FOR SLIP FIT OF ITEM 10, TUBE BODY.

NOTES:

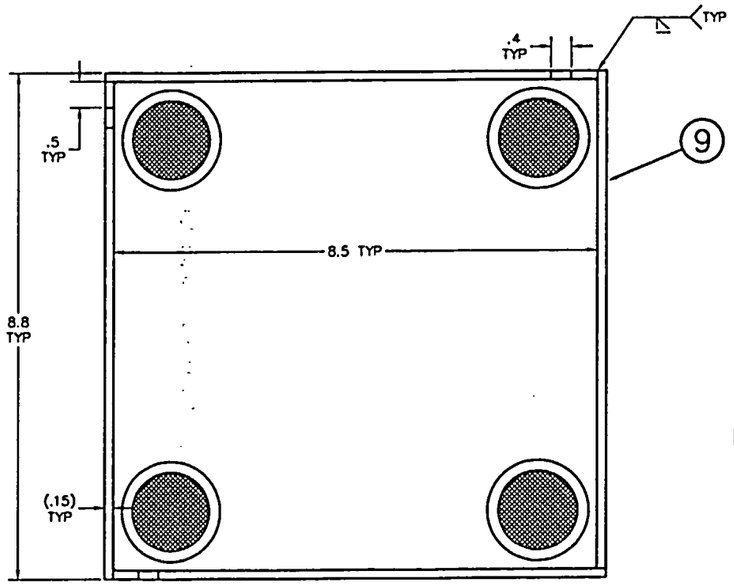

VIEW A-A

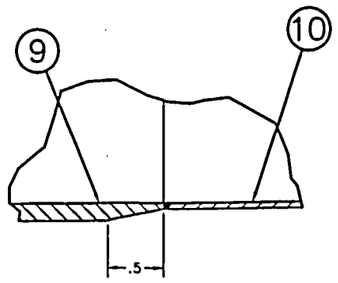

DETAIL F-F
SCALE: 2/1

	1				20	BOTTOM ASSEMBLY			412-502-95	
	1				19	TUBE BODY	304 ST. STL.	ASME SA240		18 GAGE SHEET
	4				18	SIDE PLATE	304 ST. STL.	ASME SA240/SA479		PLATE/BAR
1					17		304 ST. STL.	ASME SA240		5/8 PLATE
		4			16	DOWEL PIN	ST. STL.	COML		1/4 DIA X 3/4 LONG
		A/R			15	BACKING SCREEN	ST. STL.	COML		NEWARK ZO1 16 X 16 .023
		A/R			14	FILTER SCREEN	ST. STL.	COML		NEWARK PAC 250 X 250 X .0016
		1			13	SUPPORT RING	304 ST. STL.	ASME SA312		6" SCH 40 PIPE
		1			12	LIFT TEE	304 ST. STL.	ASME SA240/SA479		PLATE/BAR
			1		11	BOTTOM ASSEMBLY			412-502-97	
			1		10	TUBE BODY	304 ST. STL.	ASME SA240		18 GAGE SHEET
			4		9	SIDE PLATE	304 ST. STL.	ASME SA240/SA479		PLATE/BAR
	1				8	BOTTOM PLATE	304 ST. STL.	ASME SA240		5/8 PLATE
A/R	A/R				7	BACKING SCREEN	ST. STL.	COML		NEWARK ZO1 16 X 16 .023
A/R	A/R				6	FILTER SCREEN	ST. STL.	COML		NEWARK PAC 250 X 250 X .0016
		1			5	LID BOTTOM	304 ST. STL.	ASME SA240		5/16 PLATE
		1			4	WIPER	SEE NOTE 5	SEE NOTE 5		SEE NOTE 5
		4			3	LID GUIDE	304 ST. STL.	ASME SA240/SA479		1/4 PLATE/BAR
		1			2	LID PLATE	304 ST. STL.	ASME SA240		3/8 PLATE
4	4				1	COLLAR	304 ST. STL.	ASME SA240/SA479		PLATE/BAR
99	98	97	98	98	ITEM	NAME	MATERIAL	SPEC	DRAWING No.	DESCRIPTION
ASSY	ASSY	ASSY	ASSY	ASSY	QUANTITY					

UNLESS OTHERWISE STATED
DIMENSIONING AND TOLERANCING SHALL BE PER ASME Y14.5M-94, UNSPECIFIED DIMENSIONAL TOLERANCES ARE SHOWN BELOW
ALL THREAD DEPTH CALLOUTS ARE TO BE CONSIDERED AS A MIN. DEPTH OF PERFECT THREADS. THE ACTUAL DEPTH OF THE THREADS IS NOT SUBJECT TO TOLERANCE CONTROL.

DEC	UNDER 3	± .063
	3-12	± .005
	OVER 12	± .010
ANG	UNDER 6	± .02
	6-18	± .03
	OVER 18	± .06
X	ALL	± .1
FRACTIONAL ± 1/8		
ANGLES ± 0.5°		

WEIGHTS ARE APPROXIMATE AND ARE TO BE USED FOR HANDLING PURPOSES ONLY
ALL DIMENSIONS ARE IN INCHES
BORDER SIZE: F (40 X 28)
ALL UNSPECIFIED TOOL RADII: .015 - .030
BREAK ALL SHARP CORNERS .015 - .030
MACHINED SURFACES TO BE 125 OR BETTER
NEXT ASSEMBLY: 412-501
DRAWING TYPE: LICENSE

GROUP	NAME	DATE
PREPARER	R. Wilson	9-17-04
CHECKER	Ron Adams	9-17-04
PROJECT MANAGER	Rick Wilson	9/21/04
ENGINEERING	Mark Smith	9/22/04
LICENSING	Jo Thompson	9/22/04
QUALITY	Barbara Smith	9/22/04

NAC INTERNATIONAL

FUEL CAN DETAILS
MAINE YANKEE (MY)
NAC-UMS®

PROJECT	DRAWING	REV
412	502	5
SCALE FULL	WEIGHT NOTED	SH 1 OF 6

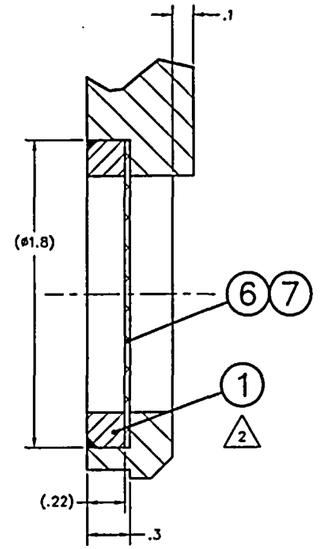

DETAIL E–E
SCALE: 3/1

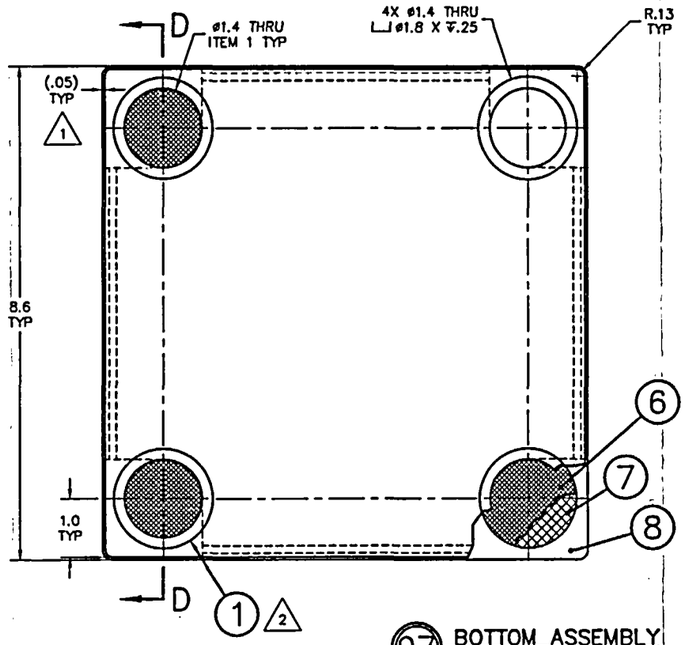

97 BOTTOM ASSEMBLY
WEIGHT: 14#

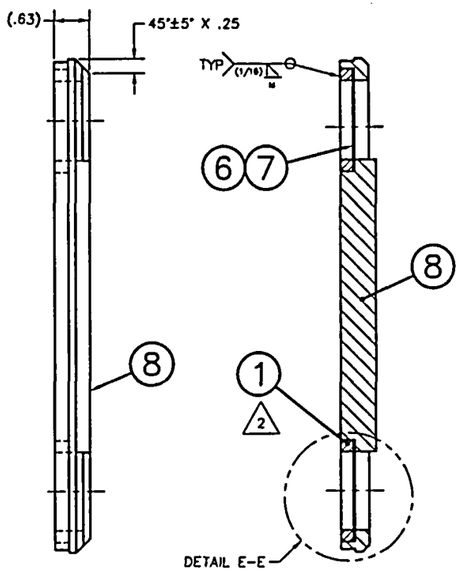

SECTION D–D

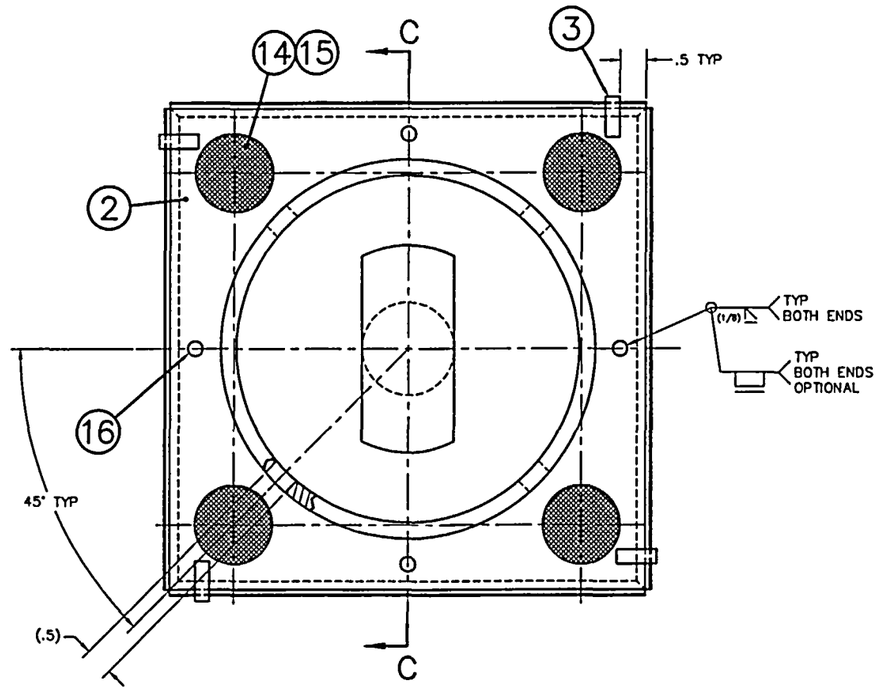

98 TOP ASSEMBLY
WEIGHT: 23#
SHOWN WITH ALUMINUM WIPER, ITEM 4

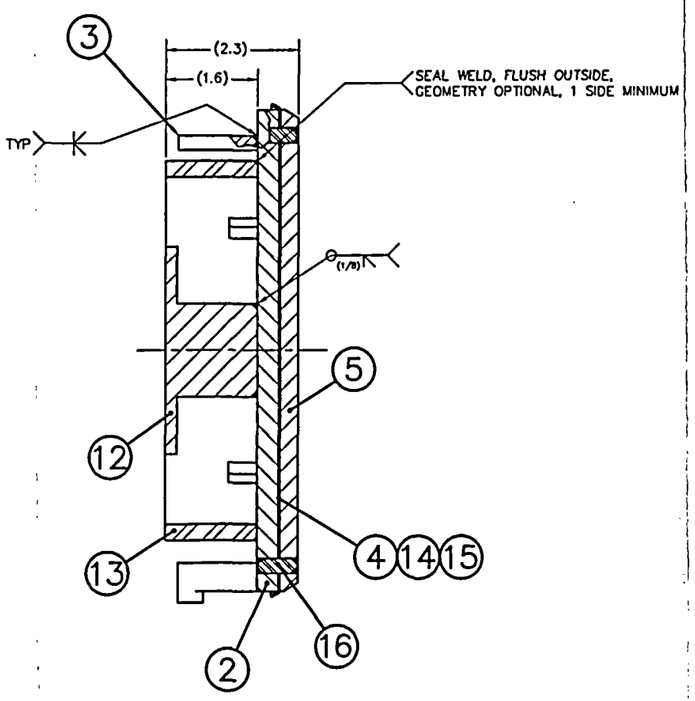

SECTION C–C

NAC INTERNATIONAL

FUEL CAN DETAILS
MAINE YANKEE (MY)
NAC-UMS®

PROJECT	412	DRAWING	502	REV 5
SCALE FULL	WEIGHT NOTED	SH 2 OF 6	3 copies 6-16-2004	

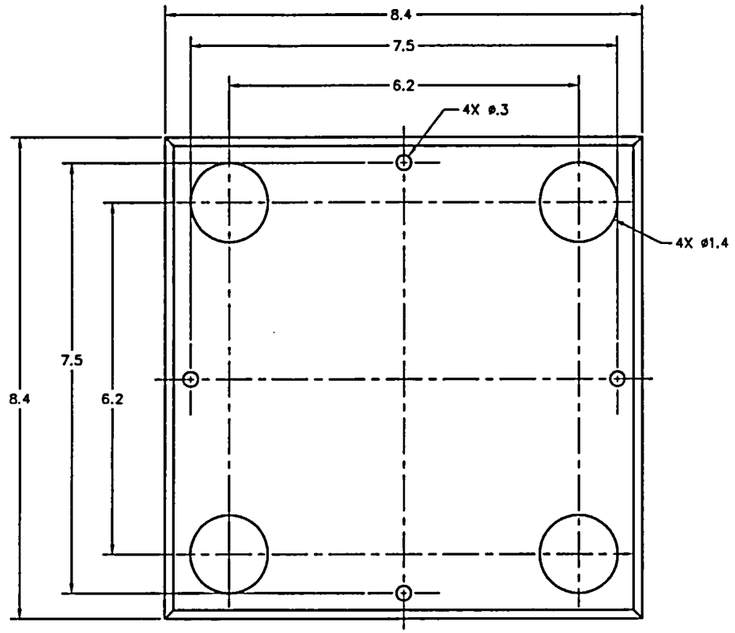

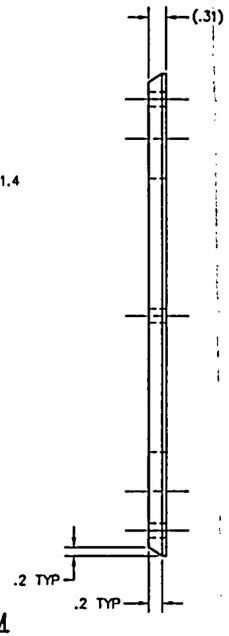

5 LID BOTTOM

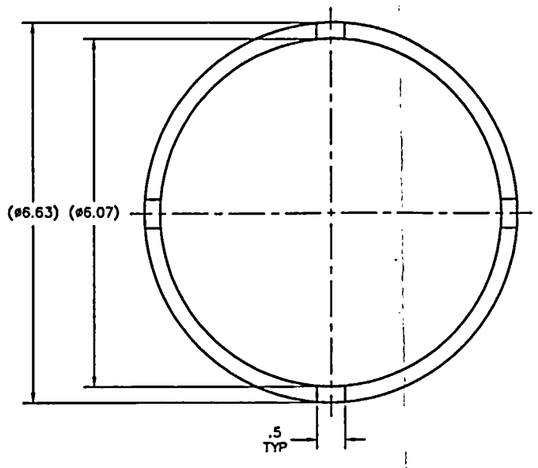

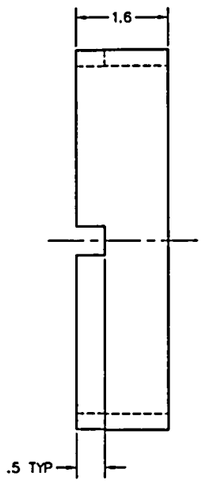

13 SUPPORT RING

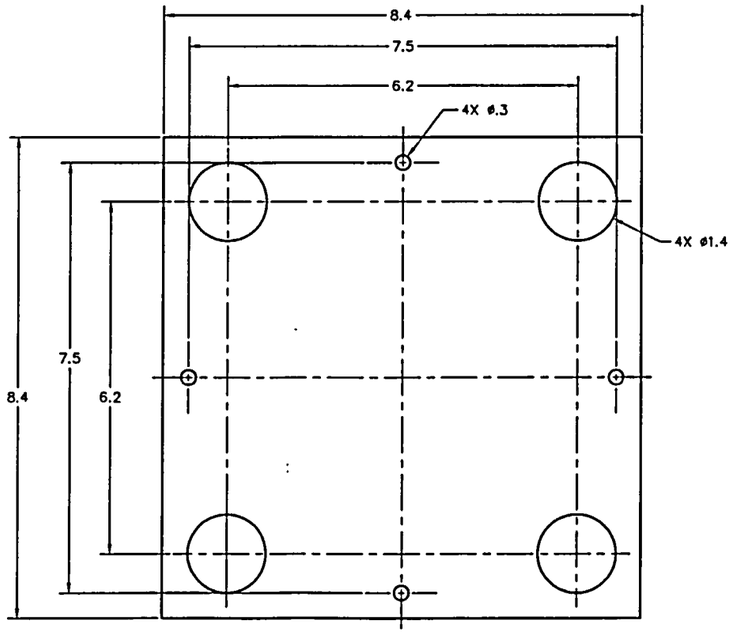

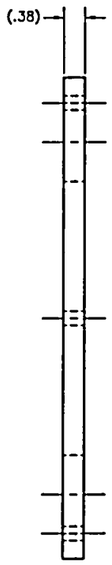

2 LID PLATE

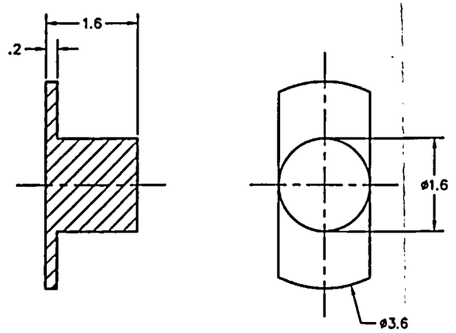

12 LIFT TEE

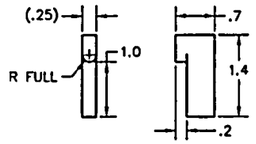

3 LID GUIDE

NAC INTERNATIONAL

FUEL CAN DETAILS
MAINE YANKEE (MY)
NAC-UMS®

PROJECT	DRAWING	REV
412	502	5
SCALE FULL	WEIGHT NOTED	SH 3 OF 6

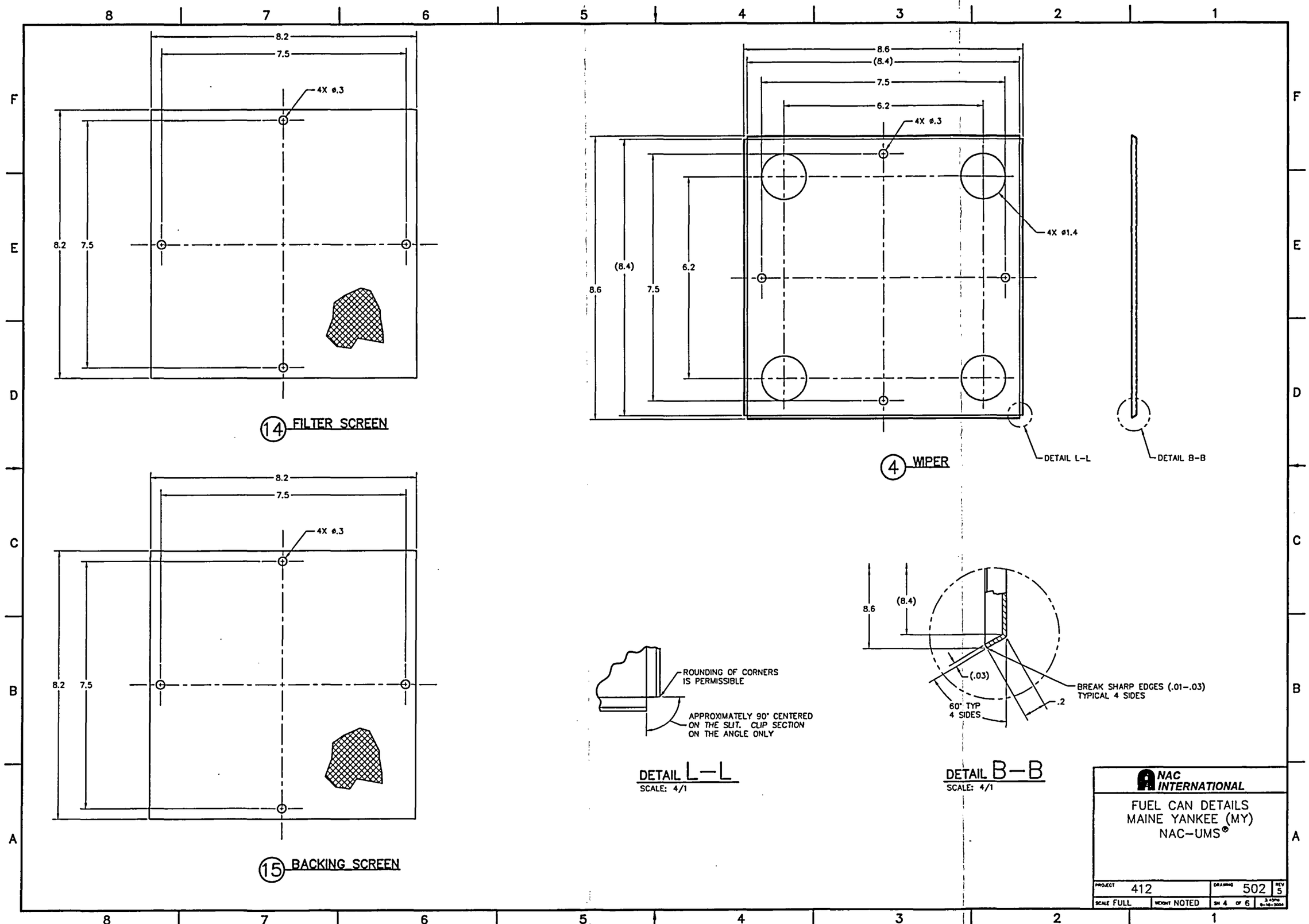

8.2
7.5
4X ø.3
8.2
7.5
14 FILTER SCREEN
8.2
7.5
4X ø.3
8.2
7.5
15 BACKING SCREEN
8.6
(8.4)
7.5
6.2
4X ø.3
4X ø1.4
8.6
(8.4)
7.5
6.2
DETAIL L-L
DETAIL B-B
4 WIPER
ROUNDING OF CORNERS IS PERMISSIBLE
APPROXIMATELY 90° CENTERED ON THE SLIT. CLIP SECTION ON THE ANGLE ONLY
DETAIL L-L
SCALE: 4/1
8.6
(8.4)
(.03)
60° TYP 4 SIDES
.2
BREAK SHARP EDGES (.01-.03) TYPICAL 4 SIDES
DETAIL B-B
SCALE: 4/1
NAC INTERNATIONAL
FUEL CAN DETAILS
MAINE YANKEE (MY)
NAC-UMS®
PROJECT 412
DRAWING 502
REV 5
SCALE FULL
WEIGHT NOTED
SH 4 OF 6

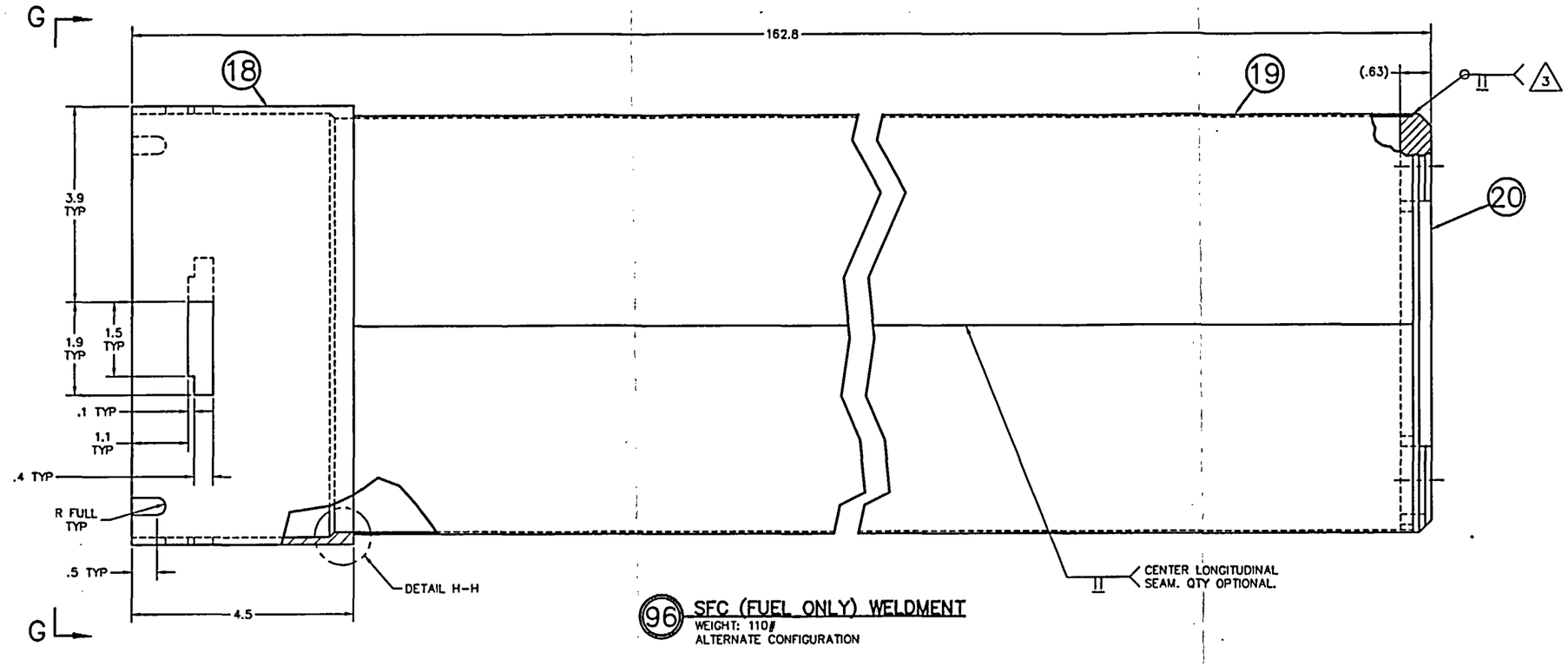

96 SFC (FUEL ONLY) WELDMENT
WEIGHT: 110#
ALTERNATE CONFIGURATION

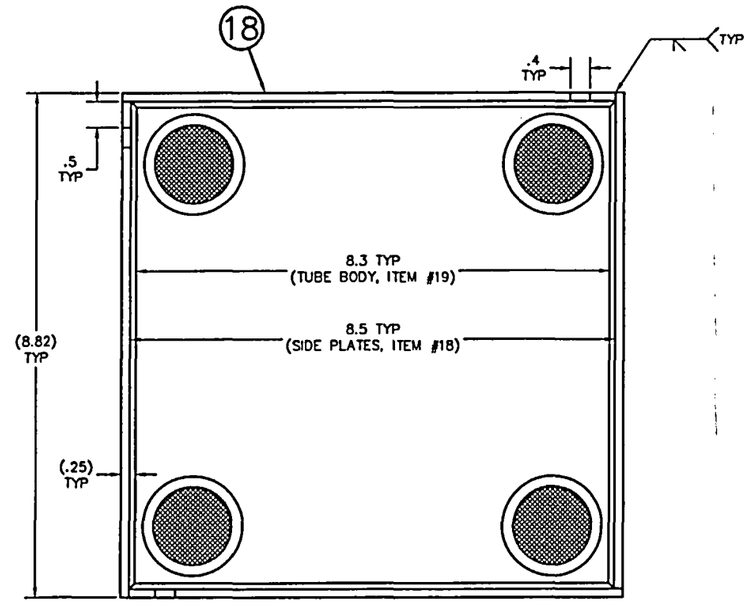

VIEW G-G

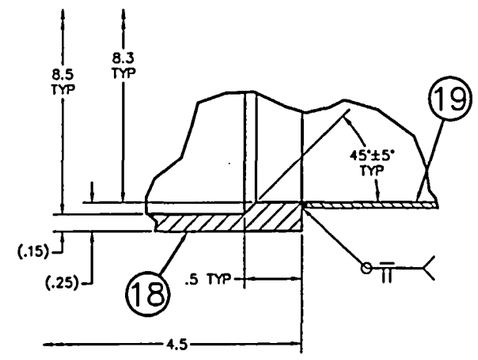

DETAIL H-H
SCALE: 2/1

NAC INTERNATIONAL

FUEL CAN DETAILS
MAINE YANKEE (MY)
NAC-UMS®

PROJECT	DRAWING	REV
412	502	5
SCALE FULL / WEIGHT NOTED	SH 5 OF 6	

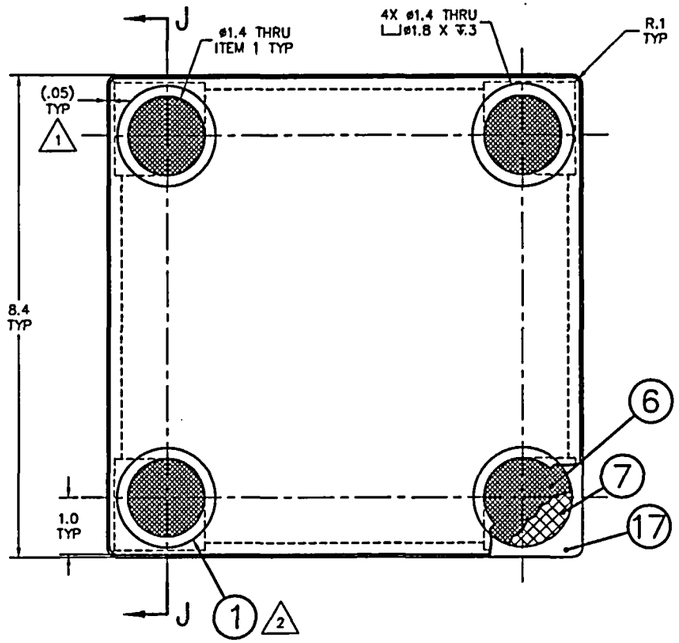

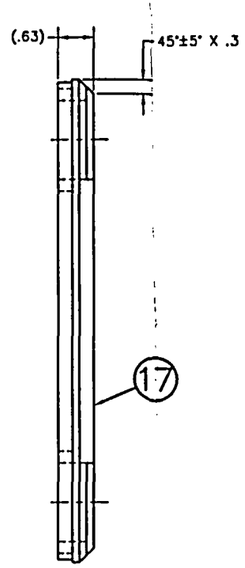

95 BOTTOM ASSEMBLY
WEIGHT: 14#
ALTERNATE CONFIGURATION

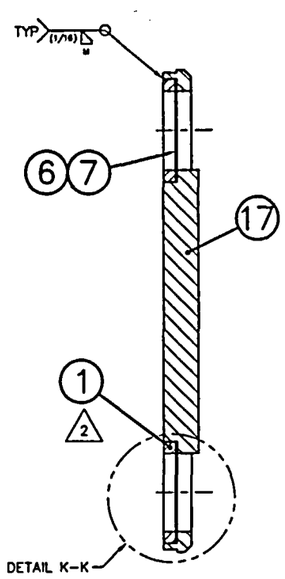

SECTION J—J

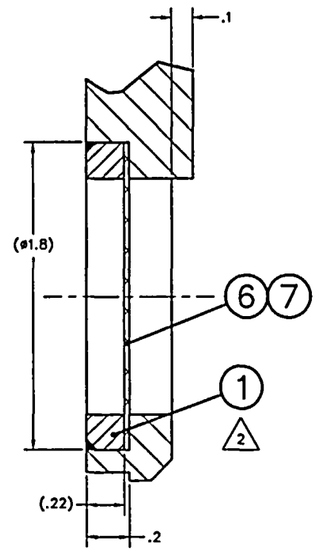

DETAIL K—K
SCALE: 3/1

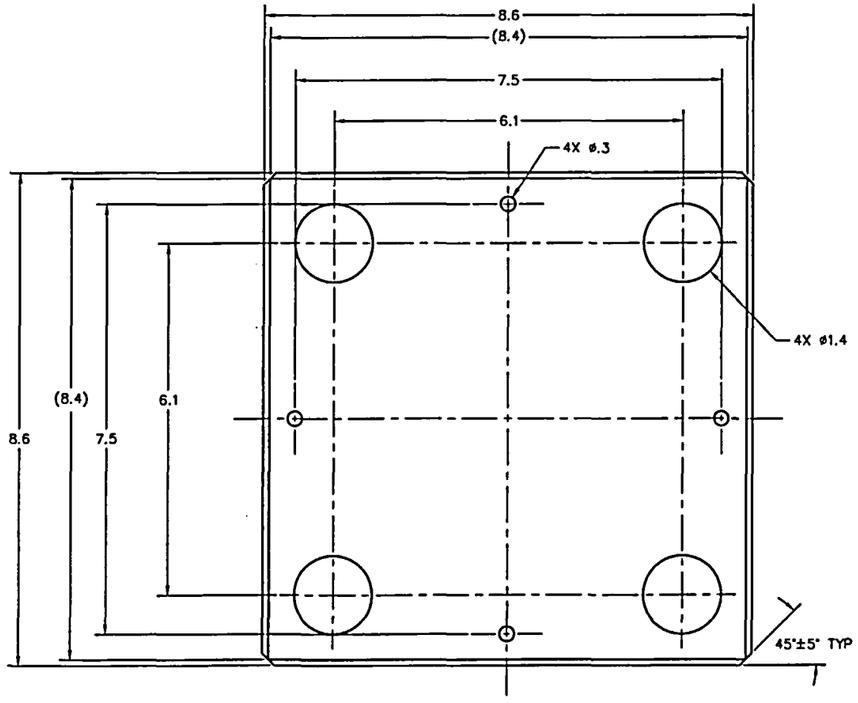

4 WIPER
(ALTERNATE DESIGN)

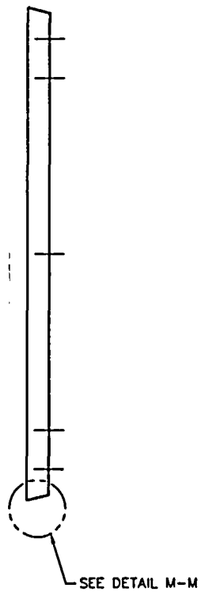

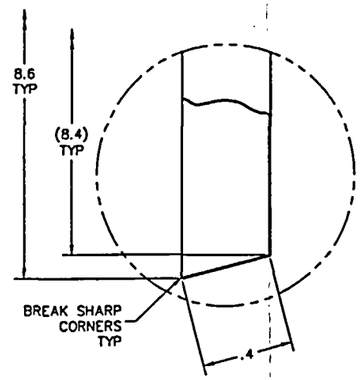

DETAIL M—M
SCALE: 4/1

NAC INTERNATIONAL

FUEL CAN DETAILS
MAINE YANKEE (MY)
NAC-UMS®

PROJECT	412	DRAWING	502	REV 5
SCALE FULL	WEIGHT NOTED	SH 6 OF 6		

Chapter 2

2.1 Spent Fuel To Be Stored

The Universal Storage System is designed to safely store up to 24 PWR spent fuel assemblies, or up to 56 BWR spent fuel assemblies, contained within a Transportable Storage Canister. On the basis of fuel assembly length and cross-section, the fuel assemblies are grouped into three classes of PWR fuel assemblies and two classes of BWR fuel assemblies. The class of the fuel assemblies is shown in Tables 6.2-1 and 6.2-2 for PWR and BWR fuel, respectively, and is based primarily on overall length.

The PWR and BWR fuel having the parameters shown in Tables 2.1.1-1 and 2.1.2-1, respectively, may be stored in the Universal Storage System. As shown in Table 2.1.1-1, the evaluation of PWR fuel includes fuel having thimble plugs and burnable poison rods in guide tube positions. As shown in Table 2.1.2-1, the BWR fuel evaluation includes fuel with a zirconium alloy channel. Any empty fuel rod position must be filled with a solid filler rod fabricated from either zirconium alloy or Type 304 stainless steel, or may be solid neutron absorber rods inserted for in-core reactivity control prior to reactor operation.

In addition to the design basis fuel, fuel that is unique to a reactor site, referred to as site specific fuel, is also evaluated. Site specific fuel consists of fuel assemblies that are configured differently, or have different parameters (such as enrichment or burnup), than the design basis fuel assemblies.

Site specific fuel is described in Section 2.1.3.

Site specific fuel is shown to be bounded by the fuel parameters shown in Tables 2.1.1-1 or 2.1.2-1, or it is separately evaluated.

The minimum initial enrichment limits are shown in Tables 2.1.1-2 and 2.1.2-2 for PWR and BWR fuel, respectively. The minimum enrichment limits exclude the loading of fuel assemblies enriched to less than 1.9 wt.% ^{235}U, including unenriched fuel assemblies, into the Transportable Storage Canister. However, fuel assemblies with unenriched axial end-blankets may be loaded into the canister.

THIS PAGE INTENTIONALLY LEFT BLANK

2.1.1 PWR Fuel Evaluation

The parameters of the PWR fuel assemblies that may be loaded in the transportable storage canister (canister) are shown in Table 2.1.1-1. The maximum initial enrichment limit represents the maximum fuel rod enrichment limit for variably enriched PWR assemblies. Each canister may contain up to 24 intact PWR fuel assemblies.

The design of the Universal Storage System is based on certain reference fuel assemblies that maximize the source terms used for the shielding and criticality evaluation, and that maximize the weight used in the structural evaluation. These reference fuel assemblies are described in the chapters appropriate to the condition being evaluated. The principal characteristics and parameters of a reference fuel, such as fuel volume, initial enrichment, cool time and burnup, do not represent limiting or bounding values. Bounding values for a fuel class are established based primarily on how principal parameters are combined and on the loading conditions or restrictions established for a class of fuel based on its parameters.

The maximum decay heat load for the storage of all types of PWR fuel assemblies is 23.0 kW (0.958 kW/assembly), except in cases where preferential loading is employed.

The minimum cool time is based on the maximum decay heat load (23.0 kW) and the dose rate limits for the concrete and transfer casks and is presented in Section 5.5. PWR fuel must be loaded in accordance with Table 2.1.1-2.

Site specific fuel that does not meet the enrichment and burnup limits of this section and Table 2.1.1-1 is separately evaluated in Section 2.1.3 to establish loading limits.

Table 2.1.1-1 PWR Fuel Assembly Characteristics

Fuel Class[1,2]	14 × 14	14 × 14	15 × 15	15 × 15	15 × 15	16 × 16	17 × 17
Fissile Isotopes	UO_2	UO_2	UO_2	UO_2	UO_2	UO_2	UO_2
Max Initial Enrichment (wt % ^{235}U)[3]	5.0	5.0	4.6	4.4	4.2	4.8	4.3
Max Initial Enrichment (wt % ^{235}U)[4]	5.0	5.0	5.0	5.0	5.0	5.0	5.0
Number of Fuel Rods	176	179	204	208	216	236	264
Number of Water Holes	5	17	21	17	9	5	25
Max Assembly Average Burnup (MWD/MTU)	45,000	45,000	45,000	45,000	45,000	45,000	45,000
Min Cool Time (years)	5	5	5	5	5	5	5
Min Average Enrichment (wt % ^{235}U)	1.9	1.9	1.9	1.9	1.9	1.9	1.9
Cladding Material	Zirconium Alloy	Zirconium Alloy	Zirconium Alloy	Zirconium Alloy	Zirconium Alloy	Zirconium Alloy	Zirconium Alloy
Non-Fuel Hardware[5]	FM, T, BPR	FM, T, BPR	FM, T, BPR	FM, T, BPR	FM, T, BPR	FM, T, BPR	FM, T, BPR
Max Weight (lb) per Storage Location[6]	1,602	1,602	1,602	1,602	1,602	1,602	1,602
Max Decay Heat (Watts) per Storage Location[7]	958.3	958.3	958.3	958.3	958.3	958.3	958.3
Fuel Condition	Intact	Intact	Intact	Intact	Intact	Intact	Intact

General Notes:

1. Fuel, except Maine Yankee fuel, must be loaded in accordance with Table 2.1.1-2.
2. Maine Yankee fuel must be loaded in accordance with Tables 2.1.3.1-4 and 2.1.3.1-5, as appropriate.
3. Maximum initial enrichment without boron credit. Represents the maximum fuel rod enrichment for variably enriched assemblies. Assemblies meeting this limit may contain a flow mixer (FM), an ICI thimble (T), or a burnable poison rod insert (BPR).
4. Maximum initial enrichment with taking credit for a minimum soluble boron concentration of 1000 ppm in the spent fuel pool water. Represents the maximum fuel rod enrichment for variably enriched assemblies. Assemblies meeting this limit may contain a flow mixer.
5. Assemblies may not contain control element assemblies, except as permitted for site specific fuel.
6. Weight includes the weight of non-fuel bearing components.
7. Maximum decay heat may be higher for site specific fuel configurations, which control fuel loading position.

2.1.2 BWR Fuel Evaluation

The parameters of the BWR fuel assemblies that may be loaded in the transportable storage canister (canister) are shown in Table 2.1.2-1. Each canister may contain up to 56 intact BWR fuel assemblies.

The design of the Universal Storage System is based on certain reference fuel assemblies that maximize the source terms used for the shielding and criticality evaluation, and that maximize the weight used in the structural evaluation. These reference fuel assemblies are described in the chapters appropriate to the condition being evaluated. The principal characteristics and parameters of a reference fuel, such as fuel volume, initial enrichment, cool time and burnup, do not represent limiting or bounding values. Bounding values for a fuel class are established based primarily on how principal parameters are combined and on the loading conditions or restrictions established for a class of fuel based on its parameters.

The maximum canister decay heat load for the storage of all types of BWR fuel assemblies is 23.0 kW (0.411 kW/assembly).

The minimum cooling time determination is based on the maximum decay heat load (23.0 kW) and the dose rate limits for the concrete and transfer casks and is presented in Section 5.5. BWR fuel must be loaded in accordance with Table 2.1.2-2.

Table 2.1.2-1 BWR Fuel Assembly Characteristics

Fuel Class[1]	7 × 7	7 × 7	8 × 8	8 × 8	8 × 8	9 × 9	9 × 9
Fissile Isotopes	UO_2	UO_2	UO_2	UO_2	UO_2	UO_2	UO_2
Max Initial Enrichment (wt % ^{235}U)[1]	4.5	4.7	4.5	4.7	4.8	4.5	4.6
Number of Fuel Rods	48	49	60	62	63	74	79
Number of Water Holes	1[4]	0	1/4[5]	2	4	2/7[5]	2
Max Assembly Average Burnup (MWD/MTU)	45,000	45,000	45,000	45,000	45,000	45,000	45,000
Min Cool Time (years)	5	5	5	5	5	5	5
Min Average Enrichment (wt % ^{235}U)	1.9	1.9	1.9	1.9	1.9	1.9	1.9
Cladding Material	Zirconium Alloy	Zirconium Alloy	Zirconium Alloy	Zirconium Alloy	Zirconium Alloy	Zirconium Alloy	Zirconium Alloy
Nonfuel Hardware[2]	Channel	Channel	Channel	Channel	Channel	Channel	Channel
Max Channel Thickness (mil)	120	120	120	120	120	120	120
Max Weight (lb) per Storage Location[3]	702	702	702	702	702	702	702
Max Decay Heat (Watts) per Storage Location	410.7	410.7	410.7	410.7	410.7	410.7	410.7
Fuel Condition	Intact	Intact	Intact	Intact	Intact	Intact	Intact

General Notes:

1. Fuel must be loaded in accordance with Table 2.1.2-2.
2. Each BWR fuel assembly may have a zirconium alloy channel or be unchanneled, but cannot have a stainless steel channel.
3. Weight includes the weight of the channel.
4. Solid fill or water rod.
5. Water rods may occupy more than one fuel lattice location.

The consolidated fuel is placed in a Maine Yankee fuel can for storage. No credit is taken for the lattice structures in the criticality, structural, or thermal analysis.

2.1.3.1.3 Maine Yankee Spent Fuel with Inserted Integral Hardware or Non-Fuel Items

Certain Maine Yankee fuel assemblies have either a Control Element Assembly or an Instrument Segment inserted in the fuel assembly. These components add to the gamma radiation source term of the standard fuel assembly.

A Maine Yankee Control Element Assembly (CEA) consists of five control rods mounted on a Type 304 stainless steel spider assembly. The five control rods are inserted in the fuel assembly guide tubes when the CEA is inserted in the fuel assembly. When fully inserted, the control element spider rests on the fuel assembly upper end fitting. The rods are fabricated from Inconel 625 or stainless steel and encapsulate B_4C as the primary neutron poison material. Fuel assemblies with a control element installed must be loaded into a Class 2 canister because of the additional height that the control element spider adds to the fuel assembly overall length. A CEA plug may also be inserted in a fuel rod. The CEA plug installs in the same position on the top of the fuel assembly, but the plug rods are only about 10 inches in length. These plugs are used to control water flow in the guide tubes. Fuel assemblies with CEA plugs installed must be loaded in a Class 2 canister.

Some standard fuel assemblies have an in-core instrument (ICI) thimble inserted in the center guide tube of the fuel assembly. The detector material and lead wire have been removed from the ICI assembly. The thimble top end and tube are primarily zirconium alloy. When installed, the instrument thimble does not add to the overall fuel assembly length. Consequently, fuel assemblies with ICI thimbles are loaded in the Class 1 canister.

The non-fuel inventory includes a segment of an ICI instrument thimble approximately 24 inches long. This segment is loaded in the corner guide tube position of an intact fuel assembly. The fuel assembly with the ICI segment installed must have a CEA flow plug installed to close the top of the corner guide tube, capturing the segment between the CEA flow plug and the bottom end plate of the fuel assembly. The ICI segment may be installed in a fuel assembly that also holds CEA finger tips in other corner guide tube positions. Because of the CEA fuel plug, the fuel assembly must be installed in a Class 2 canister.

The non-fuel inventory also includes five startup sources. One of the startup sources is unirradiated.

The startup sources include three Pu-Be sources and two Sb-Be sources that are installed in the center guide tubes of fuel assemblies that subsequently must be loaded in one of the four corner fuel positions of the basket. Each source is designed to fit in the center guide tube of an assembly, and only one startup source may be loaded in any fuel assembly. All five of these startup sources contain Sb-Be pellets, which are 50% Be by volume. One of the three Pu-Be sources is unirradiated and evaluation of this source is based on a "fresh" source material assumption.

2.1.3.1.4 Maine Yankee Spent Fuel with Unique Design

Certain Maine Yankee fuel assemblies were uniquely designed to accommodate reactor physics. These assemblies incorporate variable radial enrichment and axial blankets.

Two batches of fuel used at Maine Yankee contain variably enriched fuel rods. The maximum fuel rod enrichment of one batch is 4.21 wt % ^{235}U with the variably enriched rods enriched to 3.5 wt % ^{235}U. The maximum planar average enrichment of this batch is 3.99 wt % ^{235}U. For the other batch, the maximum fuel rod enrichment is 4.0 wt % ^{235}U, with the variably enriched rods enriched to 3.4 wt % ^{235}U. The maximum planar average enrichment of this batch is 3.92 wt % ^{235}U.

One batch of variably enriched fuel also incorporates axial end blankets with fuel pellets that have a center hole, referred to as annular fuel pellets. Annular fuel pellets are used in the top and bottom 5% of the active fuel length of each fuel rod in this batch.

2.1.3.1.5 Maine Yankee Fuel Can

Fuel assemblies classified as damaged that exceed the limits for loading as intact fuel and certain undamaged fuel configurations are loaded in a Maine Yankee fuel can, which is shown in Drawings 412-501 and 412-502. The fuel can may be loaded only in a corner position (positions numbered 3, 6, 19 and 22 in Figure 2.1.3.1-1) in the basket of a Class 1 canister. The fuel can analysis assumes the failure of 100% of the fuel rods held in the fuel can.

Table 2.1.3.1-1 Maine Yankee Site Specific Fuel Population

Site Specific Spent Fuel Configurations[1]	Est. Number of Assemblies[2]
Standard Fuel	1,434
Inserted Control Element Assembly (CEA)	168
Inserted In-Core Instrument (ICI) Thimble	138
Consolidated Fuel	2
Fuel Rod Replaced by Rod Enriched to 1.95 wt %	3
Fuel Rod Replaced by Stainless Steel Rod or Zirconium Alloy Rod	18
Fuel Rods Removed	10
Variable Enrichment	72
Variable Enrichment and Axial Blanket	68
Burnable Poison Rod Replaced by Hollow Zirconium Alloy Rod	80
Damaged Fuel in Maine Yankee Fuel Can	12
Burnup between 45,000 and 50,000 MWD/MTU	90
Maine Yankee Fuel Can	As Required
Inserted Startup Source	5
Inserted CEA Fingertips or ICI String Segment	1

1. The loading of the site- specific fuel is controlled by the requirement of Appendix B, Section B 2.0, of the Amendment 3 Technical Specifications.
2. The number of fuel assemblies in some categories may vary depending on future fuel inspections.

Table 2.1.3.1-2 Maine Yankee Fuel Can Design and Fabrication Specification Summary

Design

- The Maine Yankee Fuel Can shall be designed in accordance with ASME Code, Section III, Subsection NG except for: 1) the noted exceptions of Table B3-1 for fuel basket structures; and 2) the Maine Yankee Fuel Can may deform under accident conditions of storage.
- The Maine Yankee Fuel Can will have screened vents in the lid and base plate. Stainless steel meshed screens (250×250) shall cover all openings.
- The Maine Yankee Fuel Can shall limit the release of material from damaged fuel assemblies and fuel debris to the canister cavity.
- The Maine Yankee Fuel Can lifting structure and lifting tool shall be designed with a minimum factor of safety of 3.0 on material yield strength.

Materials

- All material shall be in accordance with the referenced drawings and meet the applicable ASME Code sections.
- All structural materials are ASME SA 240, Type 304 stainless steel.

Welding

- All welds shall be in accordance with the referenced drawings.
- The final surface of all welds (first unit) shall be liquid penetrant examined in accordance with ASME Code Section V, Article 6, with acceptance in accordance with ASME Code Section III, NG-5350. Subsequent units shall be visually examined in accordance with ASME Code Section V, Article 9, with acceptance in accordance with ASME Code Section III, NG-5360.

Fabrication

- All cutting, welding, and forming shall be in accordance with ASME Code Section III, NG-4000.

Acceptance Testing

- The Maine Yankee Fuel Can (first unit) and handling tool shall be load tested and visually inspected at the completion of fabrication.

Quality Assurance

- The Maine Yankee Fuel Can shall be constructed under a quality assurance program that meets 10 CFR 72 Subpart G. The quality assurance program must be accepted by NAC International and the licensee prior to initiation of the work.
- A Certificate of Conformance (or Compliance) shall be issued by the fabricator stating that the component meets the specifications and drawings.

Chapter 3

3.4 General Standards

3.4.1 Chemical and Galvanic Reactions

The materials used in the fabrication and operation of the Universal Storage System are evaluated to determine whether chemical, galvanic or other reactions among the materials, contents, and environments can occur. All phases of operation — loading, unloading, handling, and storage — are considered for the environments that may be encountered under normal, off-normal, or accident conditions. Based on the evaluation, no potential reactions that could adversely affect the overall integrity of the vertical concrete cask, the fuel basket, the transportable storage canister or the structural integrity and retrievability of the fuel from the canister have been identified. The evaluation conforms to the guidelines of NRC Bulletin 96-04 [18].

3.4.1.1 Component Operating Environment

Most of the component materials of the Universal Storage System are exposed to two typical operating environments: 1) an open canister containing fuel pool water or borated water with a pH of 4.5 and spent fuel or other radioactive material; or 2) a sealed canister containing helium, but with external environments that include air, rain water/snow/ice, and marine (salty) water/air. Each category of canister component materials is evaluated for potential reactions in each of the operating environments to which those materials are exposed. These environments may occur during fuel loading or unloading, handling or storage, and include normal, off-normal, and accident conditions.

The long-term environment to which the canister's internal components are exposed is dry helium. Both moisture and oxygen are removed prior to sealing the canister. The helium displaces the oxygen in the canister, effectively precluding chemical corrosion. Galvanic corrosion between dissimilar metals in electrical contact is also inhibited by the dry environment inside the sealed canister. NAC's operating procedures provide two helium backfill cycles in series separated by a vacuum-drying cycle during the preparation of the canister for storage. Therefore, the sealed canister cavity is effectively dry and galvanic corrosion is precluded.

The control element assembly, thimble plugs and nonfuel components—including start-up sources and instrument segments—are nonreactive with the fuel assembly. By design, the control components and nonfuel components are inserted in the guide tubes of a fuel assembly. During reactor operation, the control and nonfuel components are immersed in acidic water

having a high flow rate and are exposed to significantly higher neutron flux, radiation and pressure than will exist in dry storage. The control and nonfuel components are physically placed in storage in a dry, inert atmosphere in the same configuration as when used in the reactor. Therefore, there are no adverse reactions, such as gas generation, galvanic or chemical reactions or corrosion, since these components are nonreactive with the zirconium alloy guide tubes and fuel rods. There are no aluminum or carbon steel parts, and no gas generation or corrosion occurs during prolonged water immersion (20 – 40 years). Thus, no adverse reactions occur with the control and nonfuel components over prolonged periods of dry storage.

3.4.1.2 Component Material Categories

The component materials are categorized in this section for their chemical and galvanic corrosion potential on the basis of similarity of physical and chemical properties and component functions. The categories are stainless steels, nonferrous metals, carbon steel, coatings, concrete, and criticality control materials. The evaluation is based on the environment to which these categories could be exposed during operation or use of the canister.

The canister component materials are not reactive among themselves, with the canister's contents, nor with the canister's operating environments during any phase of normal, off-normal, or accident condition, loading, unloading, handling, or storage operations. Since no reactions will occur, no gases or other corrosion by-products will be generated.

The control component and nonfuel component materials are those that are typically used in the fabrication of fuel assemblies, i.e., stainless steels, Inconel 625, and zirconium alloy, so no adverse reactions occur in the inert atmosphere that exists in storage. The control element assembly, thimble plugs and nonfuel components—including start-up sources or instrument segments to be inserted into a fuel assembly—are nonreactive among themselves, with the fuel assembly, or with the canister's operating environment for any storage condition.

3.4.1.2.1 Stainless Steels

No reaction of the canister component stainless steels is expected in any environment except for the marine environment, where chloride-containing salt spray could potentially initiate pitting of the steels if the chlorides are allowed to concentrate and stay wet for extended periods of time

Thus, it is reasonable to conclude that small amounts of combustible gases, primarily hydrogen, may be produced during UMS® Storage System canister loading or unloading operations as a result of a chemical reaction between the 6061-T6 aluminum heat transfer disks in the fuel basket and the spent fuel pool water. The generation of combustible gases stops when the water is removed from the cask or canister and the aluminum surfaces are dry.

A galvanic reaction may occur at the contact surfaces between the aluminum disks and the stainless steel tie rods and spacers in the presence of an electrolyte, like the pool water. The galvanic reaction ceases when the electrolyte is removed. Each metal has some tendency to ionize, or release electrons. An EMF associated with this release of electrons is generated between two dissimilar metals in an electrolytic solution. The EMF between aluminum and stainless steel is small and the amount of corrosion is directly proportional to the EMF. Loading operations generally take less than 24 hours, a large portion of which has the canister immersed in and open to the pool water after which the electrolyte (water) is drained and the cask or canister is dried and back-filled with helium, effectively halting any galvanic reaction.

The potential chemical or galvanic reactions do not have a significant detrimental effect on the ability of the aluminum heat transfer disks to perform their function for all normal and accident conditions associated with dry storage.

Loading Operations

After the canister is removed from the pool and during canister closure operations, an air space is created inside the canister beneath the shield lid by the drain-down of the water in the canister so that the shield-lid-to-canister-shell weld can be performed. The resulting air space is at least 3 inches in depth. As there is some clearance between the inside diameter of the canister shell and the outside diameter of the shield lid, it is possible that gases released from a chemical reaction inside the canister could accumulate beneath the shield lid. A bare aluminum surface oxidizes when exposed to air, reacts chemically in an aqueous solution, and may react galvanically when in contact with stainless steel in the presence of an aqueous solution.

The reaction of aluminum in water, which results in hydrogen generation, proceeds as:

$$2\ Al + 3\ H_20 \Rightarrow Al_2O_3 + 3\ H_2$$

The aluminum oxide (Al_2O_3) produces the dull, light gray film that is present on the surface of bare aluminum when it reacts with the oxygen in air or water. The formation of the thin oxide film is a self limiting reaction as the film isolates the aluminum metal from the oxygen source acting as a barrier to further oxidation. The oxide film is stable in pH neutral (passive) solutions, but is soluble in borated PWR spent fuel pool water. The oxide film dissolves at a rate dependent upon the pH of the water, the exposure time of the aluminum in the water, and the temperatures of the aluminum and water.

PWR spent fuel pool water is a boric acid and demineralized water solution. BWR spent fuel pool water does not contain boron and typically has a neutral pH (approximately 7.0). The pH, water chemistry, and water temperature vary from pool to pool. Since the reaction rate is largely dependent upon these variables, it may vary considerably from pool to pool. Thus, the generation rate of combustible gas (hydrogen) that could be considered representative of spent fuel pools in general is very difficult to accurately calculate, but the reaction rate would be less in the neutral pH BWR pool.

The BWR basket configuration incorporates carbon steel support plates that are coated with electroless nickel. The coating protects the carbon steel during the comparatively short time that the canister is immersed in, or contains, water. The coating is described in Section 3.8.3. The coating is non-reactive with the BWR pool water and does not off-gas or generate gases as a result of contact with the pool water. Consequently, there are no flammable gases that are generated by the coating. A coating is not used in PWR basket configurations.

To ensure the safe loading and unloading of the UMS® transportable storage canister, the loading and unloading procedures detailed in Chapter 8 provide for the monitoring for hydrogen gas from before initiating shield lid welding operations through completion of the root pass of the shield lid-to-shell weld. The monitoring system shall be capable of detecting hydrogen concentrations at < 60% of the lower flammability limit of hydrogen (4%), i.e., H_2 concentration of 2.4%. The hydrogen detector will be connected to the vent port opening to allow the detector to draw gas samples from the free volume below the shield lid. The detector shall be operated to verify acceptable flammable gas levels (i.e., < 2.4%) prior to initiation of the weld through completion of the root pass. If H_2 levels are detected in concentrations equal to or greater than 2.4%, welding operations shall be immediately suspended until the hydrogen concentrations are returned to acceptable levels. When H_2 concentrations exceed the limit, the free volume under

the lid will be either evacuated by the vacuum pump on the Vacuum Drying System (VDS), thereby drawing in ambient air into the volume through the shield lid to shell weld gap, or gas can be flushed through the free volume through the vent port.

Upon completion of the root pass, the hydrogen detector can be disconnected from the vent as any possible ignition source is isolated from the cavity free volume. The cavity will continue to be vented to atmosphere through the vent port. Following completion of the shield lid welding and examinations, the canister is drained, dried and backfilled with helium. Once the canister is drained and dry, the source of combustible gas production is removed.

The vacuum pump shall exhaust to a system or area where hydrogen flammability is not an issue. Once the root pass weld is completed, there is no further likelihood of a combustible gas burn because the ignition source is isolated from the combustible gas. Once welding of the shield lid has been completed, the canister is drained, vacuum dried and backfilled with helium.

No hydrogen is expected to be detected prior to, or during, the welding operations. During the completion of the shield lid to canister shell root pass, the hydrogen gas detector is attached to the vent port and continuously operates. During operation, the detector maintains a negative pressure in the canister, drawing air into the canister at the circumference of the shield lid. This ensures that hydrogen gas does not enter the weld area. The mating surfaces of the support ring and inner lid are machined to provide a good level fit-up, but are not machined to provide a metal-to-metal seal. Consequently, additional exit paths for the combustible gases exist at the circumference of the shield lid. Once the canister is dry, no combustible gases form within the canister.

Unloading Operations

It is not expected that the canister will contain a measurable quantity of combustible gases during the time period of storage. The canister is vacuum dried and backfilled with helium immediately prior to being welded closed. There are only minor mechanisms by which hydrogen is generated after the canister is dried and sealed.

As shown in Section 8.3, the principal steps in opening the canister are the removal of the structural lid, the removal of the vent and drain port covers, and the removal of the shield lid. These steps are expected to be performed by cutting or grinding. The design of the canister precludes monitoring for the presence of combustible gases prior to the removal of the structural lid and the vent or drain port covers. Following removal of the vent port cover, a vent line is connected to the vent port quick disconnect. The vent line incorporates a hydrogen gas detector which is capable of detecting hydrogen at a concentration of 2.4% (60% of its lower flammability limit of 4%). The pressurized gases (expected to be greater than 96% helium) in the canister are expected to carry combustible gases out of the vent port. If the exiting gases in the vent line contain no hydrogen at concentrations above 2.4%, the drain port cover weld is cut and the cover removed. If levels of hydrogen gas above 2.4% concentration are detected in the vent line, then the vacuum system is used to remove all residual gas prior to removal of the drain port cover. During the removal of the drain port cover, the hydrogen gas detector is attached to the vent port to ensure that the hydrogen gas concentration remains below 2.4%. Following removal of the drain port cover, the canister is filled with water using the vent and drain ports. Prior to cutting the shield lid weld, 70 gallons of water are removed from the canister to permit the removal of the shield lid. Monitoring for hydrogen would then proceed as described for the loading operations.

3.4.1.2.3 Carbon Steel

Carbon steel support disks are used in the BWR basket configuration. There is a small electrochemical potential difference between carbon steel (SA-533) and aluminum and stainless steel. When in contact in water, these materials exhibit limited electrochemically-driven corrosion. BWR pool water is demineralized and is not sufficiently conductive to promote detectable corrosion for these metal couples. In addition, the carbon steel support disks are coated with electroless nickel to protect the carbon steel surface during exposure to air or to spent fuel pool water, further reducing the possibility of corrosion. Once the canister is loaded, the water is drained from the cavity, the air is evacuated, and the canister is backfilled with helium and sealed. Removal of the water and the moisture eliminates the catalyst for galvanic corrosion. The canister operating procedures (see Chapter 8) provide two backfill cycles in series separated by a vacuum drying cycle during closing of the canister. The displacement of oxygen by helium effectively inhibits corrosion.

The transfer cask structural components are fabricated primarily from ASTM A-588 and A-36 carbon steel. The exposed carbon steel components are coated with either Keeler & Long E-

3.4.2 Positive Closure

The Universal Storage System employs a positive closure system composed of multi-pass welds to join the canister shield lid and the canister structural lid to the shell. The penetrations to the canister cavity through the shield lid are sealed by welded port covers. The welded canister closure system (see Figure 3.4.2-1) precludes the possibility of inadvertent opening of the canister.

The top of the vertical concrete cask is closed by a bolted lid that weighs approximately 2,500 lbs. The weight of the lid, its inaccessibility, and the presence of the bolts effectively preclude inadvertent opening of the lid. In addition, a security seal is provided between two of the lid bolts to detect tampering with the closure lid.

Figure 3.4.2-1 Universal Storage System Welded Canister Closure

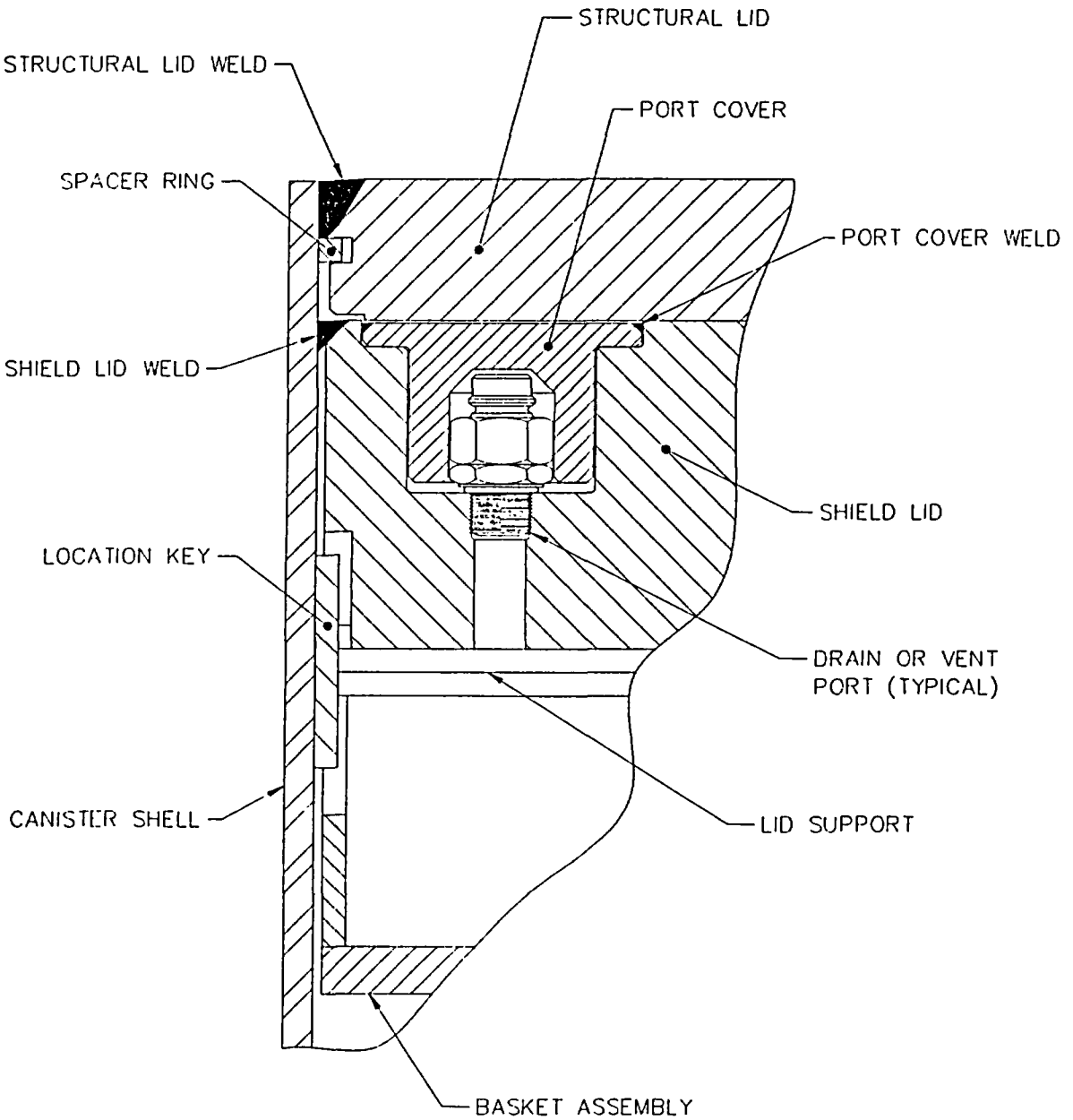

3.4.3 Lifting Devices

The UMS® is designed to allow for efficient and safe handling of the system's components at cask user facilities using various lifting and handling equipment. The transfer cask is handled by a lift yoke attached to the two lifting trunnions. The canister is handled by a suitable lifting system, such as slings and hoist rings, attached to threaded holes in the top of the structural lid. The concrete cask can be lifted and moved by the use of jacks and air pads installed under the inlets or by a vertical cask hauler connected to the optional lifting lugs.

The designs of the UMS® Universal Storage System and Universal Transport System components address the concerns identified in U.S. NRC Bulletin 96-02, "Movement of Heavy Loads Over Spent Fuel, Over Fuel in the Reactor Core, or Over Safety-Related Equipment" (April 11, 1996) as follows:

(1) The UMS® lifting and handling components satisfy the requirements of NUREG-0612 and ANSI N14.6 for safety factors on redundant or nonredundant load paths as described in this chapter.

(2) Transfer or transport cask lifting in the spent fuel pool or cask loading pit or transfer or transport cask lifting and movement above the spent fuel pool operating floor will be addressed on a plant-specific basis.

The transfer cask is provided in either the Standard configuration for canisters weighing up to 88,000 lbs or in the Advanced configuration for canisters weighing up to 98,000 lbs. The two configurations have identical operating features. The transfer casks are lifted by trunnions located near the top of each cask. The Standard transfer cask trunnions are attached by full-penetration welds to both the inner and the outer shells (Figure 3.4.3-1). The Advanced transfer cask trunnions are similarly attached, but incorporate a trunnion support plate at each trunnion for the additional load. The transfer casks are each designed as a heavy-lifting device that satisfies the requirements of NUREG-0612 and ANSI N14.6 for lifting the fully loaded canister of fuel and water, together with the shield lid, which is the maximum weight of the transfer cask during a lifting operation with a given configuration.

The transportable storage canister remains within the transfer cask during all preparation, loading, canister closure, and transfer operations. The canister is lifted using two redundant sets of lifting slings and hoist rings. The hoist rings thread into the structural lid to lift the loaded canister and to lower it into the concrete cask after the shield doors are opened. The hoist rings, shown in Figure 3.4.3-2, are also used for any subsequent lifting of the loaded dry canister. Alternative canister lifting system designs may be utilized based on a site-specific analysis and evaluation.

The vertical concrete cask is moved by means of a system of air pads. The cask is raised approximately 4 inches. by four lifting jacks placed at the jacking pads located near the end of each air inlet. A system consisting of 4 air pads is then inserted under the concrete cask. The cask is lowered onto the uninflated air pads, the jacks are removed, and the air pads are inflated to lift the concrete cask and position it as required on the storage pad or transport vehicle. When positioning is complete, the jacks are used to support the cask as the air pads are removed.

As an option, the loaded concrete cask may also be lifted and moved using lifting lugs at the top of the cask. The top lifting lugs are described in Section 3.4.3.1.3.

The structural evaluations in this section consider the bounding conditions for each aspect of the analysis. Generally, the bounding condition for lifting devices is represented by the heaviest component, or combination of components, of each configuration. The bounding conditions used in this section are:

Section	Evaluation	Bounding Condition	Configuration
3.4.3.1	Concrete Cask Lifting Jacks	Heaviest loaded Concrete Cask + 10% dynamic load factor	BWR Class 5
	Pedestal Loading	Heaviest loaded Canister + 10% dynamic load factor	BWR Class 5
	Concrete Cask Air Pads (Lifting)	Heaviest loaded Concrete Cask	BWR Class 5
	Concrete Cask Top Lifting Lugs (Lifting)	Heaviest loaded Concrete Cask + 10% dynamic load factor	BWR Class 5
3.4.3.2	Canister Lift	Heaviest loaded Canister + 10% dynamic load factor	BWR Class 5
3.4.3.3	Standard Transfer Cask Lift	Heaviest loaded Transfer Cask + 10% dynamic load factor	BWR Class 5
3.4.3.3.4	Standard Transfer Cask Shield Doors and Rails	Heaviest loaded Canister + water, shield doors and 10% dynamic load factor	BWR Class 5

Figure 3.4.3.1-1 Base Weldment Finite Element Model

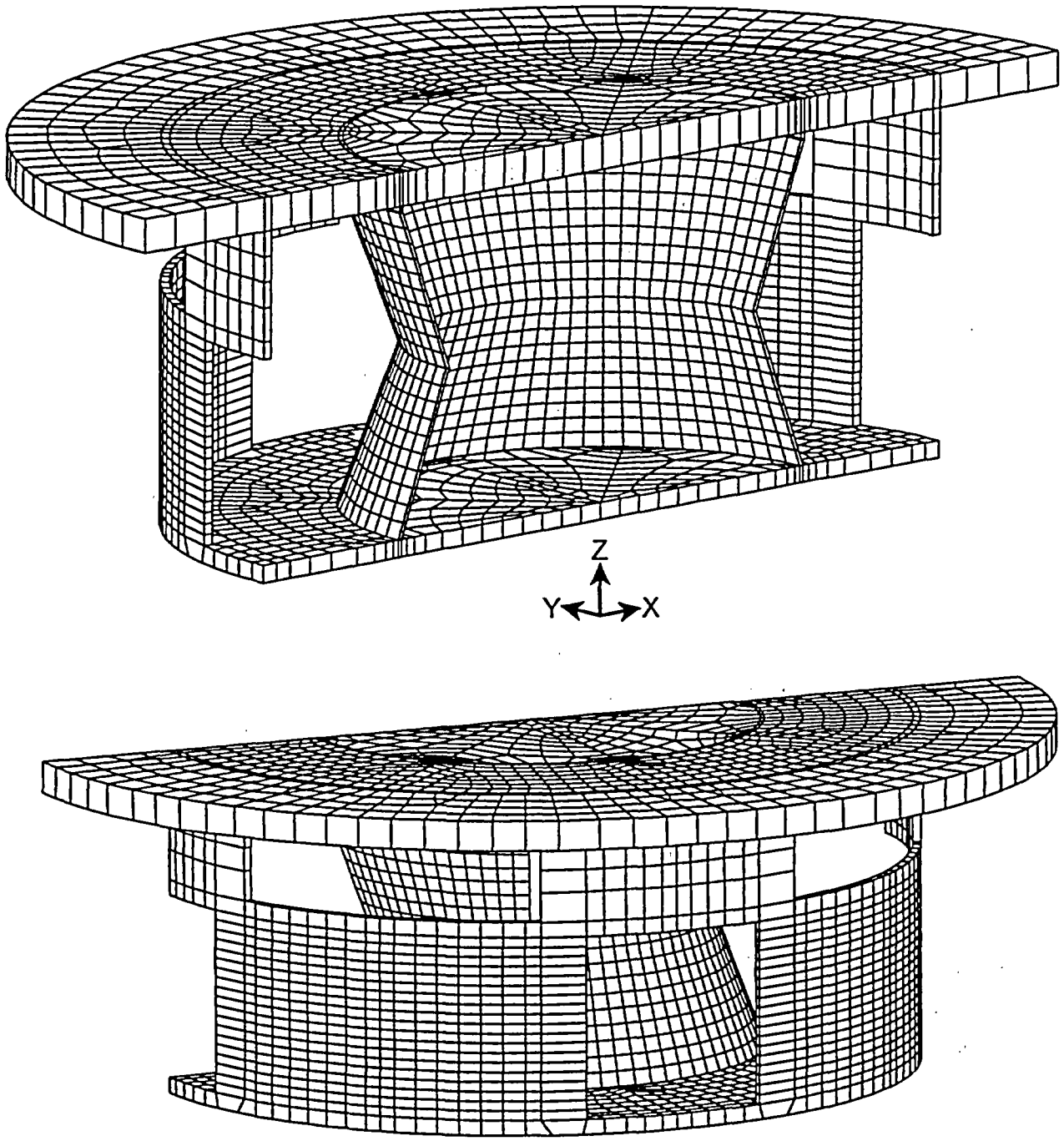

3.4.3.2 Canister Lift

The adequacy of the canister lifting devices is demonstrated by evaluating the hoist rings, the canister structural lid, and the weld that joins the structural lid to the canister shell against the criteria in NUREG-0612 [8] and ANSI N14.6 [9]. The lifting configuration for the PWR and BWR canisters consists of six hoist rings threaded into the structural lid at equally spaced angular intervals. The hoist rings are analyzed as a redundant system with two three-legged lifting slings. For redundant lifting systems, ANSI N14.6 requires that load-bearing members be capable of lifting three times the load without exceeding the tensile yield strength of the material and five times the load without exceeding the ultimate tensile strength of the material. The canister lid is evaluated for lift conditions as a redundant system that demonstrates a factor of safety greater than three based on yield strength and a factor of safety greater than five based on ultimate strength. The canister lift analysis is based on a load of 76,000 lb, which bounds the weight of the heaviest loaded canister configuration, plus a dynamic load factor of 10 %. Alternative canister lifting system designs may be used based on a site-specific analysis and evaluation.

The canister lifting configuration is shown in the following figure, where: x is the distance from the canister centerline to the hoist ring center line (29.5 inches); F_y is the vertical component of force on the hoist ring; F_x is the horizontal component of force on the hoist ring; R is the sling length; and, F_R is the maximum allowable force on the hoist ring (30,000 lbs.). The angle θ is the angle from vertical to the sling. The vertical load, F_y, assuming a 10% dynamic load factor, is:

$$F_y = \frac{76{,}000 \text{ lbs x } 1.1}{3 \text{ lift points}} = 27{,}867 \text{ lbs}$$

The hoist rings are American Drill Bushing Company, Model 23200 Safety Engineered Hoist Rings, rated at 30,000 lbs., (or comparable ring from an alternative manufacture) with a safety factor of 5 on ultimate strength.

3.5 Fuel Rods

The Universal Storage System is designed to limit fuel cladding temperatures to levels below those where zirconium alloy degradation is expected to lead to fuel clad failure. As shown in Chapter 4, fuel cladding temperature limits for PWR and BWR fuel have been established at 380°C based on 5-year cooled fuel for normal conditions of storage and 570°C for short term off-normal and accident conditions.

As shown in Table 4.1-4 and 4.1-5, the calculated maximum fuel cladding temperatures are well below the temperature limits for all design conditions of storage.

THIS PAGE INTENTIONALLY LEFT BLANK

3.6 Structural Evaluation of Site Specific Spent Fuel

This section presents the structural evaluation of fuel assemblies or configurations, which are unique to specific reactor sites or which differ from the UMS® Storage System design basis fuel. These site specific configurations result from conditions that occurred during reactor operations, participation in research and development programs, and from testing programs intended to improve reactor operations. Site specific fuel includes fuel assemblies that are uniquely designed to accommodate reactor physics, such as axial fuel blanket and variable enrichment assemblies, and fuel that is classified as damaged. Damaged fuel includes fuel rods with cladding that exhibit defects greater than pinhole leaks or hairline cracks.

Site specific fuel assembly configurations are either shown to be bounded by the analysis of the standard design basis fuel assembly configuration of the same type (PWR or BWR), or are shown to be acceptable contents by specific evaluation.

3.6.1 Structural Evaluation of Maine Yankee Site Specific Spent Fuel for Normal Operating Conditions

This section describes the structural evaluation for site specific spent fuel configurations. As described in Sections 1.3.2.1 and 2.1.3.1, the inventory of site specific spent fuel configurations includes fuel classified as intact, intact with additional fuel and non fuel-bearing hardware, consolidated fuel and fuel classified as damaged. Damaged fuel is separately containerized in one of the two configurations of the Maine Yankee Fuel Can.

3.6.1.1 Maine Yankee Intact Spent Fuel

The description for Maine Yankee site specific fuel is in Section 1.3.2.1. The standard spent fuel assembly for the Maine Yankee site is the Combustion Engineering (CE) 14×14fuel assembly. Fuel of the same design has also been supplied by Westinghouse and by Exxon. The standard 14×14 fuel assemblies are included in the population of the design basis PWR fuel assemblies for the UMS® Storage System (see Table 2.1.1-1). The structural evaluation for the UMS® transport system loaded with the standard Maine Yankee fuels is bounded by the structural evaluations in Chapter 3 for normal conditions of storage and Chapter 11 for off-normal and accident conditions of storage.

With the Control Element Assembly (CEA) inserted, the weight of a standard CE 14×14 fuel assembly is 1,360 pounds. This weight is bounded by the weight of the design basis PWR fuel assembly (37,608/24 = 1,567 lbs) used in the structural evaluations (Table 3.2-1). The fuel configurations with removed fuel rods, with fuel rods replaced by solid stainless steel or zirconium alloy rods, or with poison rods replaced by hollow zirconium alloy tubes, all weigh less than the standard CE 14×14 fuel assembly. The configuration with instrument thimbles installed in the center guide tube position weighs less than the standard assembly with the installed control element assembly. Consequently, this configuration is also bounded by the weight of the design basis fuel assembly. Since the weight of any of these fuel assembly configurations is bounded by the design basis fuel assembly weight, no additional analysis of these configurations is required.

The two consolidated fuel lattices are each constructed of 17×17 stainless steel fuel grids and stainless steel end fittings, which are connected by 4 stainless steel support rods. One of the consolidated fuel lattices has 283 fuel rods with 2 empty positions. The other has 172 fuel rods, with the remaining positions either empty or holding stainless steel rods. The calculated weight for the heaviest of the two consolidated fuel lattices is 2,100 pounds. Only one consolidated fuel lattice can be loaded into any one canister. The weight of the site specific 14×14 fuel assembly plus the CEA is approximately 1,360 lbs. Twenty-three (23) assemblies (at 1,360 lbs each) in addition to the consolidated fuel assembly (at approximately 2,100 lbs) would result in a total weight of 33,380 pounds.

Therefore, the design basis UMS® PWR fuel weight of 37,608 lbs bounds the site specific fuel and consolidated fuel by 12%. The evaluations for the Margin of Safety for the dead weight load of the fuel and the lifting evaluations in Section 3.4.4 bound the Margins of Safety for the Maine Yankee site specific fuel.

3.6.1.2 Maine Yankee Damaged Spent Fuel

The Maine Yankee fuel can, shown in Drawings 412-501 and 412-502, is provided to accommodate Maine Yankee damaged fuel. The fuel can fits within a standard PWR basket fuel tube. The primary function of the Maine Yankee fuel can is to confine the fuel material within the can to minimize the potential for dispersal of the fuel material into the canister cavity volume.

Chapter 4

List of Tables

Table 4.1-1	Summary of Thermal Design Conditions for Storage	4.1-4
Table 4.1-2	Summary of Thermal Design Conditions for Transfer	4.1-5
Table 4.1-3	Maximum Allowable Material Temperatures	4.1-6
Table 4.1-4	Summary of Thermal Evaluation Results for the Universal Storage System: PWR Fuel	4.1-7
Table 4.1-5	Summary of Thermal Evaluation Results for the Universal Storage System: BWR Fuel	4.1-8
Table 4.2-1	Thermal Properties of Solid Neutron Shield (NS-4-FR and NS-3)	4.2-2
Table 4.2-2	Thermal Properties of Stainless Steel	4.2-2
Table 4.2-3	Thermal Properties of Carbon Steel	4.2-3
Table 4.2-4	Thermal Properties of Chemical Copper Lead	4.2-3
Table 4.2-5	Thermal Properties of Type 6061-T651 Aluminum Alloy	4.2-3
Table 4.2-6	Thermal Properties of Helium	4.2-4
Table 4.2-7	Thermal Properties of Dry Air	4.2-4
Table 4.2-8	Thermal Properties of Zirconium Alloy Cladding	4.2-5
Table 4.2-9	Thermal Properties of Fuel (UO_2)	4.2-5
Table 4.2-10	Thermal Properties of BORAL Composite Sheet	4.2-6
Table 4.2-11	Thermal Properties of Concrete	4.2-6
Table 4.2-12	Thermal Properties of Water	4.2-7
Table 4.2-13	Thermal Properties of METAMIC	4.2-7
Table 4.4.1.2-1	Effective Thermal Conductivities for PWR Fuel Assemblies	4.4.1-23
Table 4.4.1.2-2	Effective Thermal Conductivities for BWR Fuel Assemblies	4.4.1-24
Table 4.4.1.2-3	Effective Thermal Conductivities for PWR Fuel Tubes	4.4.1-25
Table 4.4.1.2-4	Effective Thermal Conductivities for BWR Fuel Tubes	4.4.1-26
Table 4.4.3-1	Maximum Component Temperatures for the Normal Storage Condition - PWR	4.4.3-14
Table 4.4.3-2	Maximum Component Temperatures for the Normal Storage Condition - BWR	4.4.3-15
Table 4.4.3-3	Maximum Component Temperatures for the Transfer Condition – PWR Fuel with Design Basis 23 kW Uniformly Distributed Heat Load	4.4.3-16

List of Tables (continued)

Table 4.4.3-4	Maximum Component Temperatures for the Transfer Condition – BWR Fuel with Design Basis 23 kW Uniformly Distributed Heat Load	4.4.3-16
Table 4.4.3-5	Maximum Limiting Component Temperatures in Transient Operations for the Reduced Heat Load Cases for PWR Fuel	4.4.3-17
Table 4.4.3-6	Maximum Limiting Component Temperatures in Transient Operations for the Reduced Heat Load Cases for PWR Fuel after In-Pool Cooling	4.4.3-18
Table 4.4.3-7	Maximum Limiting Component Temperatures in Transient Operations for the Reduced Heat Load Cases for PWR Fuel after Forced-Air Cooling	4.4.3-18
Table 4.4.3-8	Maximum Limiting Component Temperatures in Transient Operations for BWR Fuel	4.4.3-19
Table 4.4.3-9	Maximum Limiting Component Temperatures in Transient Operations after Vacuum for BWR Fuel after In-Pool Cooling	4.4.3-20
Table 4.4.3-10	Maximum Limiting Component Temperatures in Transient Operations after Vacuum for BWR Fuel after Forced-Air Cooling.	4.4.3-20
Table 4.4.3-11	Maximum Limiting Component Temperatures in Transient Operations after Helium for BWR Fuel after In-Pool Cooling	4.4.3-21
Table 4.4.3-12	Maximum Limiting Component Temperatures in Transient Operations after Helium for BWR Fuel after Forced-Air Cooling..	4.4.3-21
Table 4.4.3-13	Maximum Limiting Component Temperatures in Transient Operations after Helium for PWR Fuel after In-Pool Cooling	4.4.3-21
Table 4.4.3-14	Maximum Limiting Component Temperatures in Transient Operations after Helium for PWR Fuel after Forced-Air Cooling ..	4.4.3-22
Table 4.4.5-1	PWR Per Assembly Fuel Generated Gas Inventory	4.4.5-4
Table 4.4.5-2	PWR Canister Free Volume (No Fuel or Inserts)	4.4.5-4
Table 4.4.5-3	PWR Maximum Normal Condition Pressure Summary	4.4.5-4
Table 4.4.5-4	BWR Per Assembly Fuel Generated Gas Inventory	4.4.5-5
Table 4.4.5-5	BWR Canister Free Volume (No Fuel or Inserts)	4.4.5-5
Table 4.4.5-6	BWR Maximum Normal Condition Pressure Summary	4.4.5-5

Table 4.1-2 Summary of Thermal Design Conditions for Transfer

Condition[1,2]	Maximum Duration (Hours)[3]	
	PWR	BWR
Canister Filled with Water[4]	20	17
Vacuum Drying	27	25
Canister Filled with Helium	20	16

(1) The canister is inside the transfer cask, with an ambient temperature of 76°F.

(2) See Section 8.1 for description of limiting conditions.

(3) Maximum durations based on 23 kW heat load.

(4) The initial water temperature is considered to be 100°F.

Table 4.1-3 Maximum Allowable Material Temperatures

Material	Temperature Limits (°F)		Reference
	Long Term	Short Term	
Concrete	150(B)/300(L)[1]	350	ACI-349 [4]
Fuel Clad PWR Fuel (5-year cooled) BWR Fuel (5-year cooled)	 752 752	 752/1,058[2] 752/1,058[2]	 ISG-11 [38] and PNL-4835 [2]
Aluminum 6061-T651	650	750	MIL-HDBK-5G [7]
NS-4-FR	300	300	GESC [8]
Chemical Copper Lead	600	600	Baumeister [9]
SA693 17-4PH Type 630 Stainless Steel	650	800	ASME Code [13] ARMCO [11]
SA240 Type 304 Stainless Steel	800	800	ASME Code [13]
SA240 Type 304L Stainless Steel	800	800	ASME Code [13]
ASTM A533 Type B Carbon Steel	700	700	ASME Code [13]
ASME SA588 Carbon Steel	700	700	ASME Code Case N-71-17 [12]
ASTM A36 Carbon Steel	700	700	ASME Code Case N-71-17 [12]

(1) B and L refer to bulk temperatures and local temperatures, respectively. The local temperature allowable applies to a restricted region where the bulk temperature allowable may be exceeded.

(2) The temperature limit of the fuel cladding is 400°C (752°F) for storage (long-term) and transfer (short-term) conditions. The temperature limit of the fuel cladding is 570°C (1,058°F) for off-normal and accident (short-term) conditions.

Table 4.2-8 Thermal Properties of Zirconium Alloy Cladding

Property (units)	Value at Temperature			
	392°F	572°F	752°F	932°F
Conductivity (Btu/hr-in-°F) [22]	0.69	0.73	0.80	0.87
Density (lb/in^3) [23]	← 0.237 →			
Specific Heat (Btu/lbm-°F) [22]	0.072	0.074	0.076	0.079
Emissivity [22]	← 0.75 →			

Table 4.2-9 Thermal Properties of Fuel (UO_2)

Property (units)	Value at Temperature				
	100°F	257°F	482°F	707°F	932°F
Conductivity (Btu/hr-in-°F) [22]	0.38	0.347	0.277	0.236	0.212
Specific Heat (Btu/lbm-°F) [22]	0.057	0.062	0.067	0.071	0.073
Density (lbm/in^3) [23]	← 0.396 →				
Emissivity [22]	← 0.85 →				

Table 4.2-10 Thermal Properties of BORAL Composite Sheet

Property (units)	Value at Temperature	
	100°F	500°F
Conductivity (Btu/hr-in-°F)		
Aluminum Clad [24]	7.805	8.976
Core Matrix		
PWR (calculated)	3.45	3.05
BWR (calculated)	6.60	7.23
Emissivity[1] [25]	← 0.15 →	

[1] The emissivity of the aluminum clad of the BORAL sheet ranges from 0.10 to 0.19. An averaged value of 0.15 is used.

Table 4.2-11 Thermal Properties of Concrete

Property (units)	Value at Temperature		
	100°F	200°F	300°F
Conductivity (Btu/hr-in-°F) [26]	0.091	0.089	0.086
Density (lbm/in^3) [27]	← 140 →		
Specific Heat (Btu/lbm-°F) [17]	← 0.20 →		
Emissivity [1] [17,28]	← 0.90 →		
Absorptivity [29]	← 0.60 →		

[1] Emissivity = 0.93 for masonry, 0.94 for rough concrete; 0.9 is used.

4.4.1 Thermal Models

Finite element models are utilized for the thermal evaluation of the Universal Storage System, as shown below. These models are used separately to evaluate the system for the storage of PWR or BWR fuel.

1. Two-Dimensional Axisymmetric Air Flow and Concrete Cask Models
2. Three-Dimensional Canister Models
3. Three-Dimensional Transfer Cask and Canister Models
4. Three-Dimensional Periodic Canister Internal Models
5. Two-Dimensional Fuel Models
6. Two-Dimensional Fuel Tube Models
7. Two-Dimensional Forced Air Flow Model for Transfer Cask Cooling

The two-dimensional axisymmetric air flow and concrete cask model includes the concrete cask, air in the air inlets, annulus and the air outlets, the canister and the canister internals, which are modeled as homogeneous regions with effective thermal conductivities. The effective thermal conductivities for the canister internals in the radial direction are determined using the three-dimensional periodic canister internal models. The effective conductivities in the canister axial direction are calculated using classical methods. The two-dimensional axisymmetric air flow and concrete cask model is used to perform computational fluid dynamic analyses to determine the mass flow rate, velocity and temperature of the air flow, as well as the temperature distribution of the concrete, concrete cask steel liner and the canister. Two models are generated for the evaluations of the PWR and the BWR systems, respectively. These models are essentially identical, but have slight differences in dimensions and the effective properties of the canister internals.

The three-dimensional canister model comprises the fuel assemblies, fuel tubes, stainless steel or carbon steel support disks, aluminum heat transfer disks, top and bottom weldments, the canister shell, lids and bottom plate. The canister model is employed to evaluate the temperature distribution of the fuel cladding and basket components. The fuel assemblies and the fuel tubes in the three-dimensional canister model are modeled using effective conductivities. The effective conductivities for the fuel assemblies are determined using the two-dimensional fuel models. The effective conductivities for the fuel tubes are determined using the two-dimensional fuel tube

models. Two three-dimensional canister models are generated for the PWR and BWR canisters, respectively.

The three-dimensional transfer cask model includes the transfer cask and the canister with its internals. This model is used to perform transient and steady state analyses for the transfer condition, starting from removing the transfer cask/canister from the spent fuel pool, vacuum drying and finally back-filling the canister with helium. Separate transfer cask models are required for PWR and BWR systems.

The three-dimensional canister internal model consists of a periodic section of the canister internals. For the PWR canister, the model contains one support disk with two heat transfer disks (half thickness) on its top and bottom, fuel assemblies, fuel tubes and the media in the canister. For the BWR canister, two models are required. The first model, for the central region of the BWR canister, contains one heat transfer disk with two support disks (half thickness) on its top and bottom, fuel assemblies, fuel tubes and the media in the canister. The other model, for the region without heat transfer disks, contains two support disks (half thickness), fuel assemblies, fuel tubes and the media in the canister. The purpose of the three-dimensional periodic canister internal model is to determine the effective thermal conductivity of the canister internals in the canister radial direction. The effective conductivities are used in the two-dimensional axisymmetric air flow and concrete cask models. The media in the canister is considered to be helium. The fuel assemblies and fuel tubes in this model are modeled as homogeneous regions with effective thermal properties, which are determined by the two-dimensional fuel models and the two-dimensional fuel tube models.

The two-dimensional fuel model includes the fuel pellets, cladding and the media occupying the space between fuel rods. The media is considered to be helium for storage conditions and water, vacuum, helium or saturated steam for transfer conditions. The model is used to determine the effective thermal conductivities of the fuel assembly. In order to account for various types of fuel assemblies, a total of seven fuel models are generated: Four models for the 14×14, 15×15, 16×16 and 17×17 PWR fuel assemblies and three models for the 7×7, 8×8 and 9×9 BWR fuel assemblies. The effective properties are used in the three-dimensional canister models, the three-dimensional periodic canister internal models and the three-dimensional transfer cask and canister model.

4.4.1.3 Three-Dimensional Transfer Cask and Canister Models

The three-dimensional quarter-symmetry transfer cask model is a representation of the PWR canister and transfer cask assembly. A half-symmetry model is used for the BWR canister and transfer cask. The model is used to perform a transient thermal analysis to determine the maximum water temperature in the canister for the period beginning immediately after removing the transfer cask and canister from the spent fuel pool. The model is also used to calculate the maximum temperature of the fuel cladding, the transfer cask and canister components during the vacuum drying condition and after the canister is backfilled with helium. The transfer cask is evaluated separately for PWR or BWR fuel using two models. For each fuel type, the class of fuel with the shortest associated canister and transfer cask is modeled in order to maximize the contents heat generation rate per unit volume and minimize the heat rejection from the external surfaces. The models for PWR and BWR fuel are shown in Figures 4.4.1.3-1 and 4.4.1.3-2, respectively. ANSYS SOLID70 three-dimensional conduction elements, LINK31 (PWR model) and MATRIX50 (BWR model) radiation elements are used. The model includes the transfer cask and the canister and its internals. The details of the canister and contents are modeled using the same methodology as that presented in Section 4.4.1.2 (Three-Dimensional Canister Models). Effective thermal properties for the fuel regions and the fuel tube regions are established using the fuel models and fuel tube models presented in Sections 4.4.1.5 and 4.4.1.6, respectively. The effective specific heat and density are calculated on the basis of material mass and volume ratio, respectively.

Radiation across the gaps was represented by the LINK31 elements or the MATRIX50 elements, which used the gray body emissivities for stainless and carbon steels. Convection is considered at the top of the canister lid, the exterior surfaces of the transfer cask, as well as at the annulus between the canister and the inner surface of the transfer cask. The combination of radiation and convection at the transfer cask exterior vertical surfaces and canister lid top surface is taken into account in the model using the same method described in Section 4.4.1.2 for the three-dimensional canister models. The bottom of the transfer cask is modeled as being in contact with the concrete floor. In the PWR configuration analysis, for the condition when the canister is filled with water at the start of the transfer operation, natural circulation of the water is taken into account by adjusting the effective conductivities in the fuel and water regions based on a classical energy balance calculation of the canister contents. Water circulation is not considered in the BWR configuration analysis. Volumetric heat generation (Btu/hr-in^3) is applied to the active fuel region based on a total heat load of 23 kW for both PWR and BWR fuel. The model

considers the active fuel length of 144 inches and an axial power distribution, as shown in Figures 4.4.1.1-3 and 4.4.1.1-4 for PWR and BWR fuel, respectively.

An initial temperature of 100°F is considered in the entire model on the basis of the typical average water temperature in a spent fuel pool. For the design basis heat loads, the thermal transient analysis is performed for 20 hours (PWR) and 17 hours (BWR) with the water inside the canister, 27 hours (PWR) and 25 hours (BWR) for the vacuum condition, and 20 hours (PWR) and 16 hours (BWR) for the helium condition, followed by a steady-state analysis (in helium condition). Different time durations are used for the transient analyses for the reduced heat load cases, as specified in Section 4.4.3.1. The temperature history of the fuel cladding and the basket components, as well as the transfer cask components, is determined and compared with the short-term temperature limits presented in Tables 4.4.3-3 and 4.4.3-4.

Figure 4.4.1.3-1 Three-Dimensional Transfer Cask and Canister Model - PWR

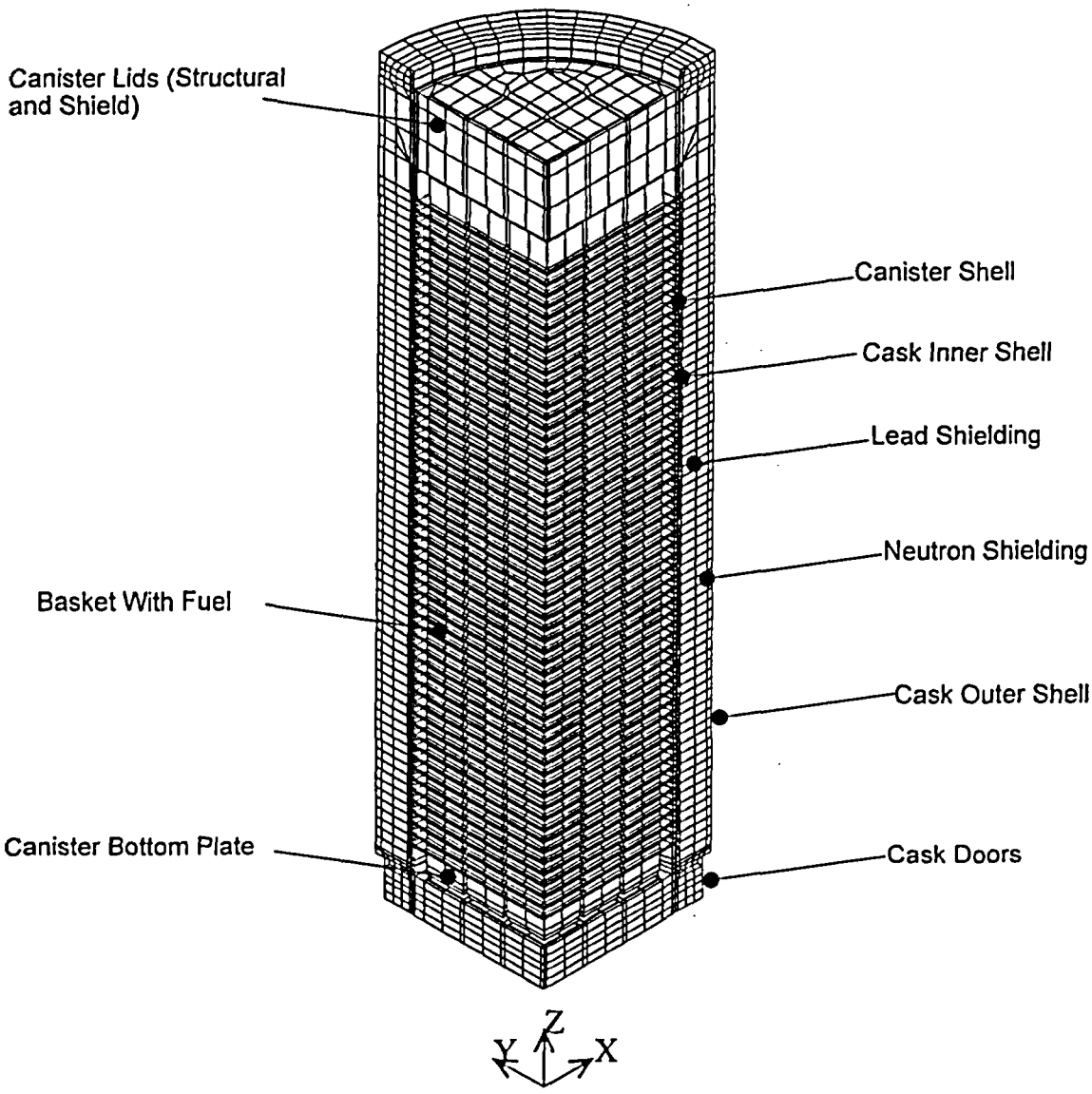

Note: Canister and transfer cask media not shown for clarity.

Figure 4.4.1.3-2 Three-Dimensional Transfer Cask and Canister Model - BWR

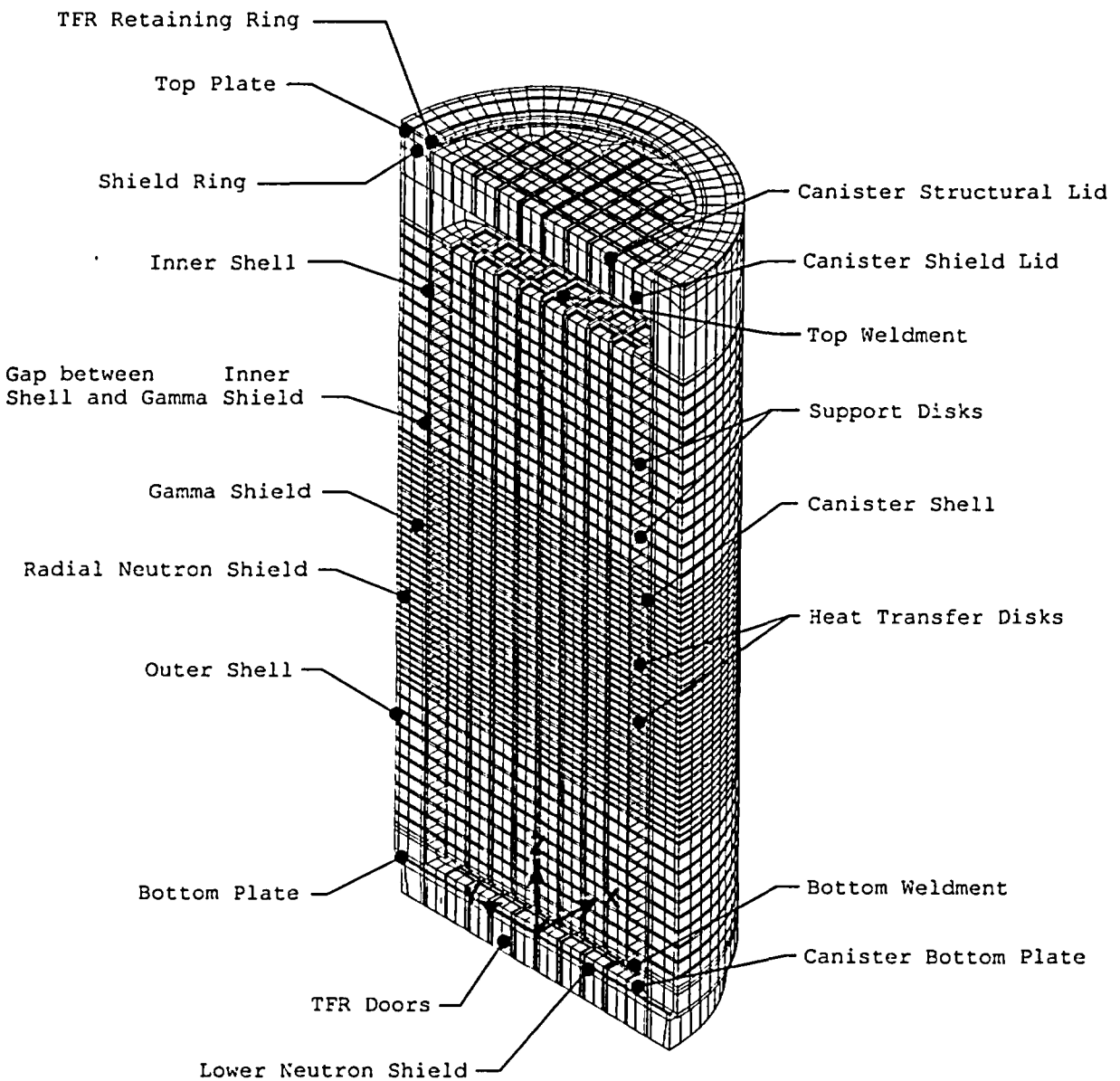

Canister and transfer cask media not shown for clarity.

4.4.1.5 Two-Dimensional Fuel Models

The effective conductivity of the fuel is determined by the two-dimensional finite element model of the fuel assembly. The effective conductivity is used in the three-dimensional canister models (Section 4.4.1.2) and the three-dimensional periodic canister internal models (Section 4.4.1.4). A total of seven models are required: four models for the 14×14, 15×15, 16×16 and 17×17 PWR fuels and three models for the 7×7, 8×8 and 9×9 BWR fuels. Because of similarity, only the figure for the PWR 17×17 model is shown in this section (Figure 4.4.1.5-1). All models contain a full cross-section of an assembly to accommodate the radiation elements.

The model includes the fuel pellets, cladding, media between fuel rods, media between the fuel rods and the inner surface of the fuel tube (PWR) or fuel channel (BWR), and helium at the gap between the fuel pellets and cladding. Four types of media are considered: helium, water, a vacuum and saturated steam. Modes of heat transfer modeled include conduction and radiation between individual fuel rods for the steady-state condition. ANSYS PLANE55 conduction elements and MATRIX50 radiation elements are used to model conduction and radiation. Radiation elements are defined between fuel rods and from rods to the wall. Radiation at the gap between the pellets and the cladding is conservatively ignored.

The effective conductivity for the fuel is determined by using an equation defined in a Sandia National Laboratory Report [30]. The equation is used to determine the maximum temperature of a square cross-section of an isotropic homogeneous fuel with a uniform volumetric heat generation. At the boundary of the square cross-section, the temperature is constrained to be uniform. The expression for the temperature at the center of the fuel is given by:

$$T_c = T_e + 0.29468\ (Qa^2 / K_{eff})$$

where: T_c = the temperature at the center of the fuel (°F)
T_e = the temperature applied to the exterior of the fuel (°F)
Q = volumetric heat generation rate (Btu/hr-in^3)
a = half length of the square cross-section of the fuel (inch)
K_{eff} = effective thermal conductivity for the isotropic homogeneous fuel material (Btu/hr-in-°F)

Volumetric heat generation (Btu/hr-in^3) based on the design heat load is applied to the pellets. The effective conductivity is determined based on the heat generated and the temperature difference from the center of the model to the edge of the model. Temperature-dependent effective properties are established by performing multiple analyses using different boundary temperatures. The effective conductivity in the axial direction of the fuel assembly is calculated on the basis of the material area ratio.

Figure 4.4.1.5-1 Two-Dimensional PWR (17×17) Fuel Model

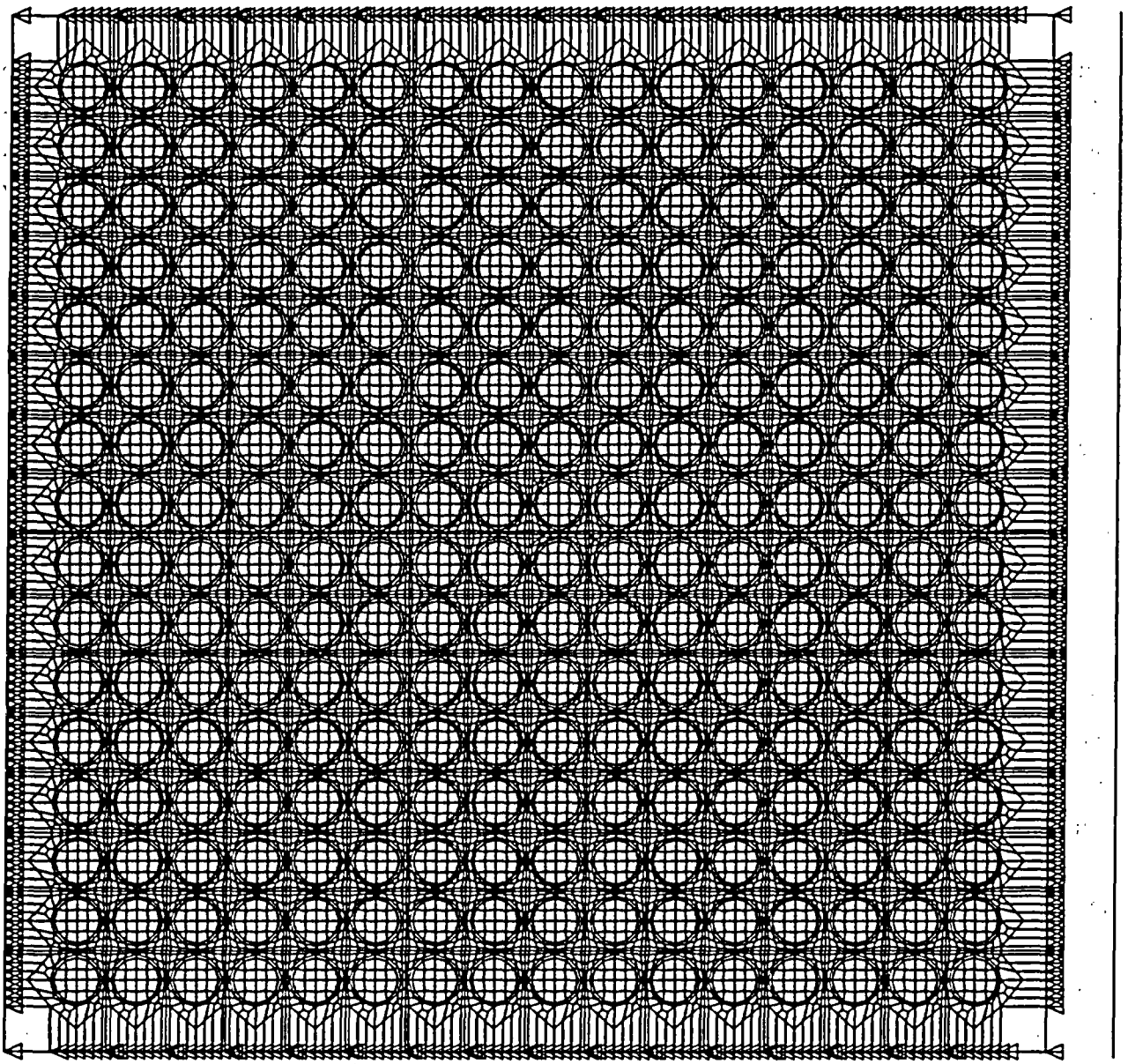

4.4.1.6 Two-Dimensional Fuel Tube Models

The two-dimensional fuel tube model is used to calculate the effective conductivities of the fuel tube wall and BORAL plate. These effective conductivities are used in the three-dimensional canister models (Section 4.4.1.2), the three-dimensional transfer cask and canister models (Section 4.4.1.3) and the three-dimensional periodic canister internal models (Section 4.4.1.4). A total of three models is required: one PWR model and two BWR models (one with the neutron absorber plate, one without the neutron absorber plate), corresponding to the enveloping configurations of the 7×7, 8×8 and 9×9 BWR fuels.

Two forms of the neutron absorber plates are evaluated. The configuration shown in the fuel tube models in Figures 4.4.1.6-1 and 4.4.1.6-2 (for PWR and BWR fuel, respectively) incorporates the BORAL core matrix sandwiched between two layers of aluminum cladding. An alternate design substitutes a single layer of METAMIC for the BORAL. The thermal properties of these materials are presented in Tables 4.2-10 (BORAL) and 4.2-13 (METAMIC). The difference in thermal performance between the two neutron absorber materials is considered to be insignificant, since the primary thermal resistance in the fuel tube design is not the neutron absorber material, but rather the gaps between the fuel tube and the disks.

As shown in Figure 4.4.1.6-1, the PWR model includes the fuel tube, the BORAL plate (including the core matrix sandwiched by aluminum cladding), the stainless steel cladding and the gap between the stainless steel cladding and the support disk or heat transfer disk. Four types of media are considered in the gaps: helium, water, a vacuum and saturated steam.

ANSYS PLANE55 conduction elements and LINK31 radiation elements are used to construct the model. The model consists of six layers of conduction elements and two radiation elements (radiation elements are not used for water condition) that are defined at the gaps (two for each gap). The thickness of the model (x-direction) is the distance measured from the outside face of the fuel assembly to the inside face of the slot in the support disk (assuming the fuel tube is centered in the hole in the disk). The gap size between the neutron absorber plate and the stainless steel cladding is 0.003 inch. The height of the model is defined as equal to the width of the model.

Figure 4.4.1.6-1 Two-Dimensional Fuel Tube Model: PWR Fuel

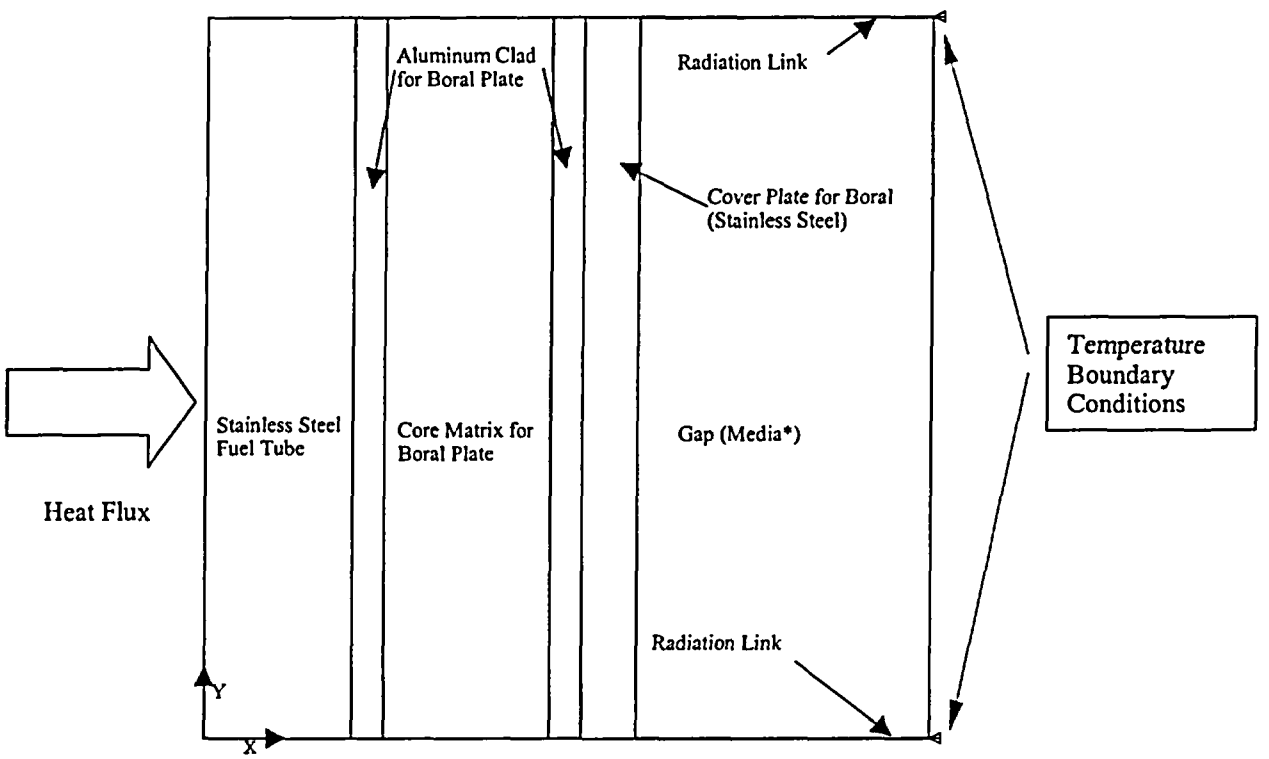

*Media can be water, vacuum, helium or saturated steam.

Figure 4.4.1.6-2 Two-Dimensional Fuel Tube Model: BWR Fuel Tube with Neutron Absorber

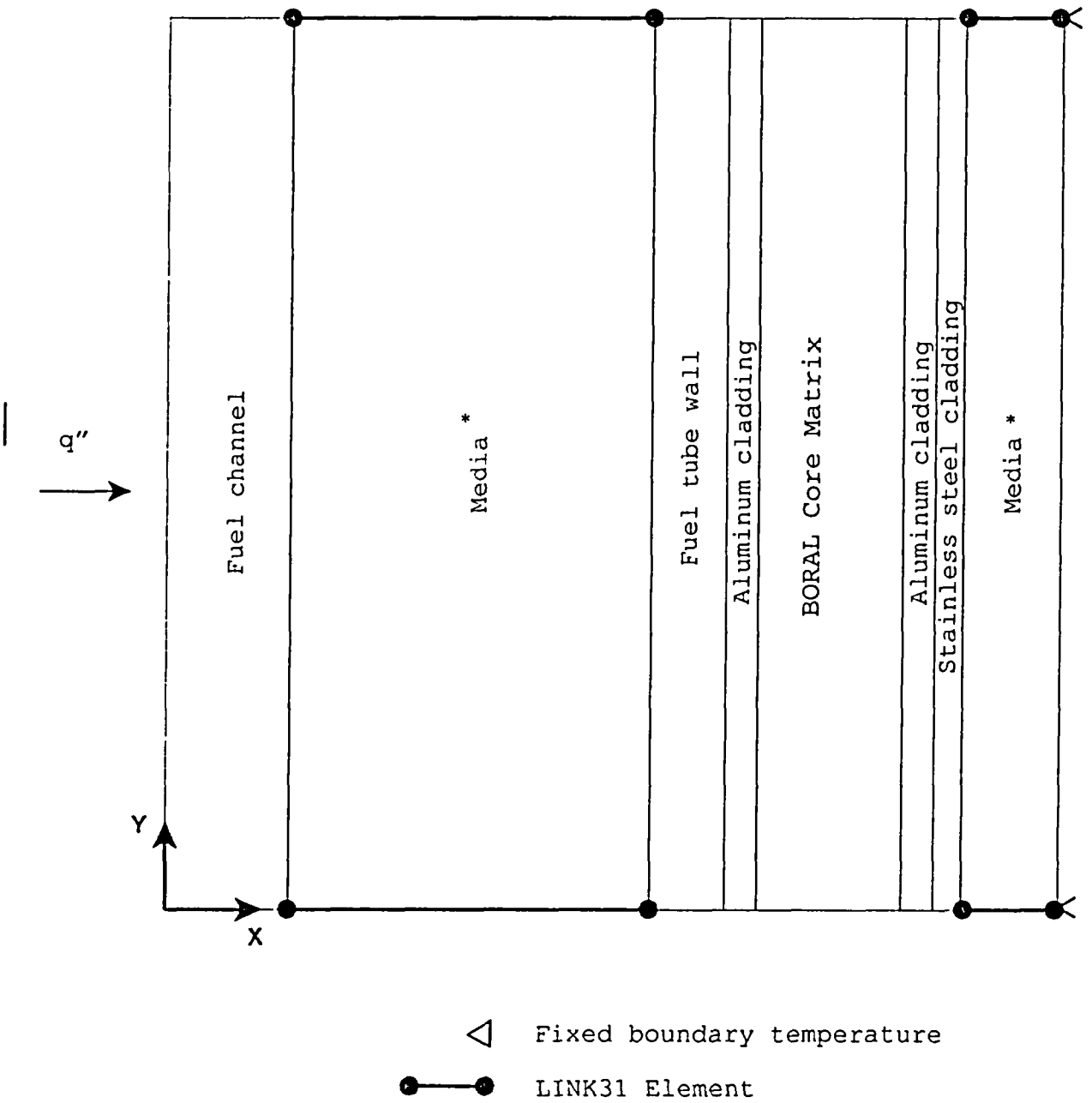

*Media can be water, vacuum, helium or saturated steam.

Figure 4.4.1.6-3 Two-Dimensional Fuel Tube Model: BWR Fuel Tube without Neutron Absorber

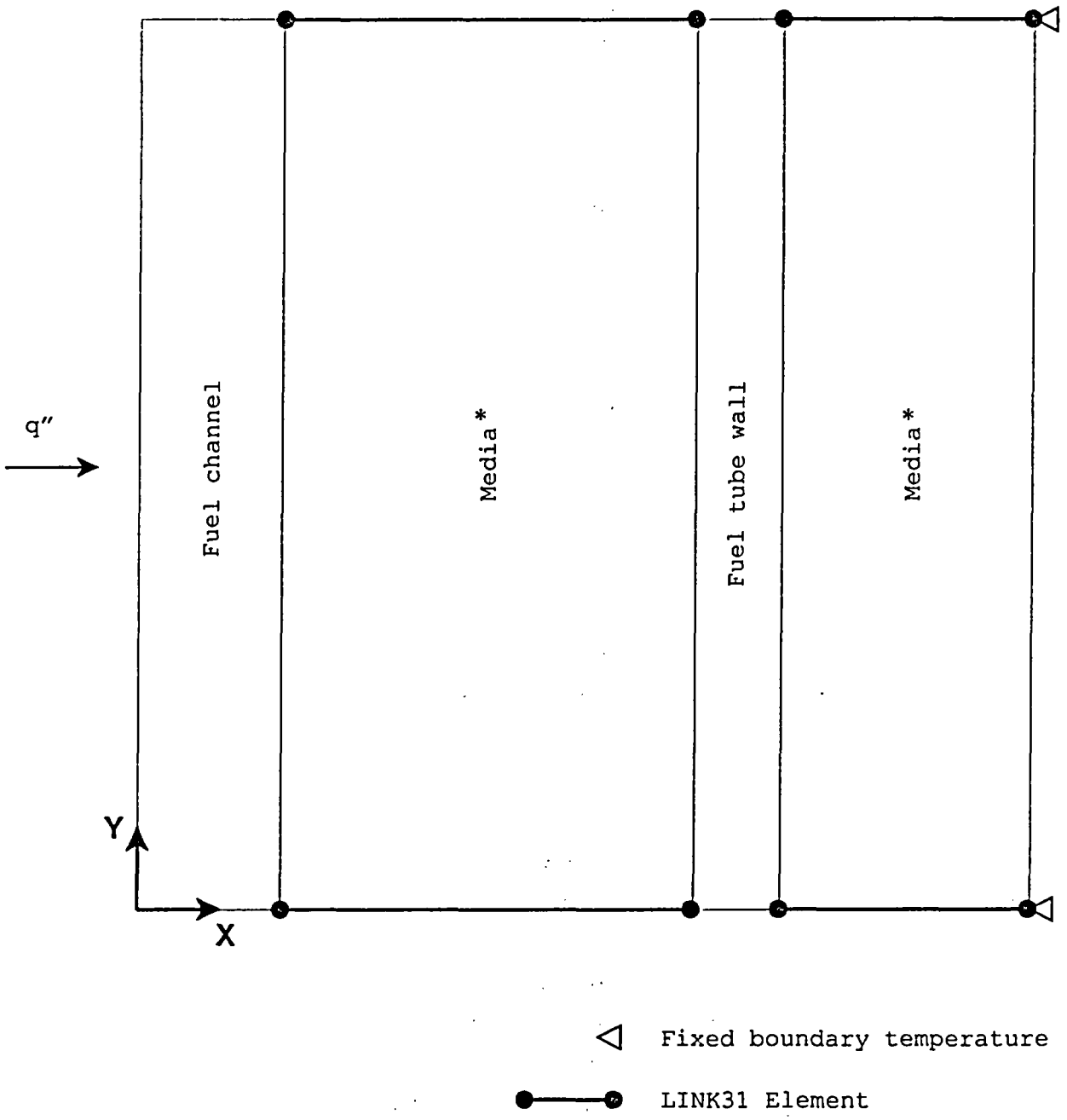

*Media can be water, vacuum, helium or saturated steam.

4.4.1.7 Two-Dimensional Forced Air Flow Model for Transfer Cask Cooling

A two-dimensional axisymmetric air flow model is used to determine the air flow rate needed to ensure that the maximum temperature of the canister shell and canister components inside the transfer cask do not exceed those presented in Tables 4.4.3-3 and 4.4.3-4 for the helium condition. This air flow model considers a 0.34-inch air annulus between the outer surface of the canister shell and the inner surface of the transfer cask, and has a total length of 191-inches. The fuel canister is cooled by forced convection in the air annulus resulting from air pumped in through fill/drain ports in the body of the transfer cask. The radiation heat transfer between the vertical annulus surfaces (the canister shell outer surface and the transfer cask inner surface) is conservatively neglected. All heat is considered to be removed by the air flow.

ANSYS FLOTRAN FLUID141 fluid thermal elements are used to construct the two-dimensional axisymmetric air flow finite element model for transfer cask cooling. The model and the boundary conditions applied to the model, are shown in Figures 4.4.1.7-1, 4.4.1.7-2 and 4.4.1.7-3.

As shown in Tables 4.4.3-3 and 4.4.3-4, the temperature margin of the governing component (the heat transfer disk) for the PWR fuel configuration is lower than the margin for the BWR fuel configuration; therefore, the thermal loading for the PWR configuration is used. The non-uniform heat generation applied in the model, shown in Figure 4.4.1.7-4, is based on the axial power distribution shown in Figure 4.4.1.1-3 for PWR fuel.

The inlet air velocity is specified based on the volume flow rate. Room temperature (76°F) is applied to the inlet nodes, while zero air velocity, in both the X and Y directions, is defined as the boundary condition for the vertical solid sides.

Results of the analyses of forced air cooling of the canister inside the transfer cask are shown in Figure 4.4.1.7-5. As shown in the figure, the maximum canister shell temperature is less than 416°F for a forced air flow rate of 275 ft^3/minute, or higher, where 416°F is the calculated maximum canister shell temperature for the typical transfer operation for the PWR configuration (Table 4.4.3-3). A forced air volume flow rate of 375 ft^3/minute is conservatively specified for cooling the canister in the event that forced air cooling is required. Evaluation of a forced air volume flow rate of 375 ft^3/minute, results in a maximum canister shell temperature of 321°F, which is significantly less than the design basis temperature of 416°F.

4.4.3 Maximum Temperatures for PWR and BWR Fuel

Temperature distribution and maximum component temperatures for the Universal Storage System under the normal conditions of storage and transfer, based on the use of the transfer cask, are provided in this section. Components of the Universal Storage System containing PWR and BWR fuels are addressed separately. Temperature distributions for the evaluated off-normal and accident conditions are presented in Sections 11.1 and 11.2.

Figure 4.4.3-1 shows the temperature distribution of the Vertical Concrete Cask and the canister containing the PWR design basis fuel for the normal, long-term storage condition. The air flow pattern and air temperatures in the annulus between the PWR canister and the concrete cask liner for the normal condition of storage are shown in Figures 4.4.3-2 and 4.4.3-3, respectively. The temperature distribution in the concrete portion of the concrete cask for the PWR assembly is shown in Figure 4.4.3-4. The temperature distribution for the BWR design basis fuel is similar to that of the PWR fuel and is, therefore, not presented. Table 4.4.3-1 shows the maximum component temperatures for the normal condition of storage for the PWR design basis fuel. The maximum component temperatures for the normal condition of storage for the BWR design basis fuel are shown in Table 4.4.3-2.

As shown in Figure 4.4.3-3, a high-temperature gradient exists near the wall of the canister and the liner of the concrete cask, while the air in the center of the annulus exhibits a much lower temperature gradient, indicating significant boundary layer features of the air flow. The temperatures at the concrete cask steel liner surface are higher than the air temperature, which indicates that salient radiation heat transfer occurs across the annulus. As shown in Figure 4.4.3-4, the local temperature in the concrete, directly affected by the radiation heat transfer across the annulus, can reach 186°F (less than the 200°F allowable temperature). The bulk temperature in the concrete, as determined using volume average of the temperatures in the concrete region, is 135°F, less than the allowable value of 150°F.

Under typical operations, the transient history of maximum component temperatures for the transfer conditions (canister, inside the transfer cask, containing water for 20 hours for PWR and 17 hours for BWR, vacuum for 27 hours for PWR and 25 hours for BWR, and in helium for 20 hours for PWR and 16 hours for BWR) is shown in Figures 4.4.3-5 and 4.4.3-6 for PWR and BWR fuels, respectively. The maximum component temperatures for the transfer conditions (vacuum and helium conditions) are shown in Tables 4.4.3-3 and 4.4.3-4, for PWR and BWR fuels, respectively. Note that the media inside the canister is considered to be satured steam during the first four hours of the vacuum condition.

The maximum calculated water temperature is 203°F for both the PWR and BWR fuels at the end of 17 hours based on an initial water temperature of 100°F.

4.4.3.1 Maximum Temperatures at Reduced Total Heat Loads

This section provides the evaluation of component temperatures for fuel heat loads less than the design basis heat load of 23 kW. Transient thermal analyses are performed for PWR fuel heat loads of 20, 17.6, 14, 11 and 8 kW to establish the allowable time limits for the vacuum condition in the canister as described in the Technical Specifications for the Limiting Conditions of Operation (LCO), LCOs 3.1.1 and 3.1.4. The time limits ensure that the allowable temperatures of the limiting components — the heat transfer disks and the fuel cladding — are not exceeded. A steady-state evaluation is also performed for all the heat load cases in the vacuum condition and all the heat load cases in the helium condition. If the steady-state temperature calculated is less than the limiting component allowable temperature, then the allowable time duration in the vacuum or helium conditions is defined to be 600 hours (25 days) based on the 30 day time test for abnormal regimes as described in PNL-4835 [34].

The three-dimensional transfer cask and canister model for the PWR fuel configuration, described in Section 4.4.1.3, is used for the transient and steady-state thermal analysis for the reduced heat load cases. To obtain the bounding temperatures for all possible loading configurations, thermal analyses are performed for a total of 14 cases as tabulated in the following table. The basket locations are shown in Figure 4.4.3-7. Since the maximum temperature for the limiting components (fuel cladding and heat transfer disk) always occurs at the central region of the basket, hotter fuels (maximum allowable heat load for 5-year cooled fuel: 0.958 kW = 23 kW/24) are specified at the central basket locations. The bounding cases for each heat load condition are noted with an asterisk (*) in the tabulation which follows. Six cases (cases 3 through 8) are evaluated for the 17.6 kW heat load condition. The first four cases (cases 3 through 6) represent standard UMS® system fuel loadings. The remaining two cases (cases 7 and 8) account for the preferential loading configuration for Maine Yankee site-specific fuel (Section 4.5.1.2), with case 8 being the bounding case for the Maine Yankee fuel.

Canister Heat Load (kW)	Heat Load Case	Heat Load (kW) Evaluated in Each Basket Location (See Figure 4.4.3-7)					
		1	2	3	4	5	6
20	1	0.958	0.958	0.709	0.958	0.709	0.709
20*	2	0.958	0.958	0.958	0.958	0.958	0.210
17.6	3	0.958	0.958	0.509	0.958	0.509	0.509
17.6*	4	0.958	0.958	0.568	0.958	0.958	0.000
17.6	5	0.958	0.958	0.958	0.958	0.568	0.000
17.6	6	0.958	0.958	0.284	0.958	0.958	0.284
17.6	7	0.958	0.146	1.050	0.146	1.050	1.050
17.6	8	0.958	0.958	1.050	0.384	1.050	0.000
14	9	0.958	0.958	0.209	0.958	0.209	0.209
14*	10	0.958	0.958	0.000	0.958	0.626	0.000
11	11	0.958	0.896	0.000	0.896	0.000	0.000
11*	12	0.958	0.958	0.000	0.834	0.000	0.000
8	13	0.958	0.521	0.000	0.521	0.000	0.000
8*	14	0.958	0.958	0.000	0.084	0.000	0.000

The heat load (23 kW/24 Assemblies = 0.958 kW) at the four (4) central basket locations corresponds to the maximum allowable canister heat load for 5-year cooled fuel (Table 4.4.7-8). The non-uniform heat loads evaluated in this section bound the equivalent uniform heat loads, since they result in higher maximum temperatures of the fuel cladding and heat transfer disk.

Volumetric heat generation (Btu/hr-in^3) is applied to the active fuel region in each fuel assembly location of the model using the axial power distribution for PWR fuel (Figure 4.4.1.1-3) in the axial direction.

The thermal analysis results for the closure and transfer of a loaded PWR fuel canister in the transfer cask for the reduced heat load cases are shown in Table 4.4.3-5, with a comparison to the results for the design basis heat load case. The temperatures shown are the maximum temperatures for the limiting components (fuel cladding and heat transfer disk). The maximum temperatures of the fuel cladding and the heat transfer disk are less than the allowable temperatures (Table 4.1-3) of these components for the short-term conditions of vacuum drying and helium backfill. As shown in Table 4.4.3-5, a time limit of 600 hours is specified for moving the canister out of the transfer cask after the canister is filled with helium. This time limit is for the heat load cases where the maximum fuel cladding/heat transfer disk temperatures for the steady-state condition are below the short-term allowable temperatures. Based on the differences in the PWR and BWR models for the transient analysis of the "water period" (see Section 4.4.1.3), a different method is used in post-processing the analysis results to determine the maximum water temperature at the end of the "water period." For the PWR configuration, the maximum water temperature is considered to be the maximum temperature of the fuel region in the model. For the

BWR configuration, the maximum water temperature is considered to be the volumetric average temperature of the calculated cladding temperatures in the active fuel region of the hottest fuel assembly. The maximum water temperature is below 212°F for all PWR and BWR cases evaluated.

The Technical Specifications specify the remedial actions, either in-pool or forced air cooling, required to ensure that the fuel cladding and basket component temperatures do not exceed their short-term allowable temperatures, if the time limits are not met. LCOs 3.1.1 and 3.1.4 incorporate the operating times for heat loads that are less than the design basis heat loads as evaluated in this section.

Using the same three-dimensional transfer cask/canister models, analysis is performed for the conditions of in-pool cooling and forced air cooling followed by the vacuum drying and helium backfill operation (LCO 3.1.1). The conditions at the end of the vacuum drying as shown in Tables 4.4.3-5 (PWR) and 4.4.3-8 (BWR) are used as the initial conditions of the analyses. The LCO 3.1.1 "Action" analysis results are shown in Tables 4.4.3-6 and 4.4.3-7 for the PWR configuration and Tables 4.4.3-9 and 4.4.3-10 for the BWR configuration. Note that the duration of the second vacuum (after completion of the in-pool or forced air cooling) is limited (calculated based on the heat-up rate of the first vacuum), so the maximum temperatures at the end of the second vacuum cycle will not exceed those at the end of the first vacuum cycle. The maximum temperatures at the end of the first vacuum (Table 4.4.3-5 for PWR and Table 4.4.3-8 for BWR) are conservatively presented as the maximum temperatures for the second vacuum condition. The maximum temperatures for the fuel cladding and the heat transfer disk are below the short-term allowable temperatures.

The in-pool cooling and the forced-air cooling operations (helium in canister) in LCO 3.1.4 are also evaluated for the PWR configuration for the 23 kW case and the BWR configuration for the 23 kW and 20 kW cases. The temperature profiles at the end of the helium condition, as shown in Table 4.4.3-5 for PWR and Table 4.4.3-8 for BWR, are used as the initial condition. The results for the BWR are shown in Tables 4.4.3-11 and 4.4.3-12 for the in-pool cooling and forced-air cooling, respectively. The results for the PWR are shown in Tables 4.4.3-13 and 4.4.3-14 for the in-pool cooling and forced-air cooling, respectively. Note that the time limit for the first helium backfill condition is used for the second helium backfill condition (after completion of the in-pool or forced-air cooling). Based on the heat-up rate of the first helium condition, the maximum component temperatures at the end of the second helium condition are well below the maximum temperatures at the end of the first helium condition. The maximum

Table 4.4.3-5 Maximum Limiting Component Temperatures in Transient Operations for the Reduced Heat Load Cases for PWR Fuel

Heat Load (kW)	Water			Vacuum			Helium		
	Duration (hours)	Maximum Temperature (°F)		Duration (hours)	Maximum Temperature (°F)		Duration (hours)	Max. Temp. / Temp. at Steady-state (°F)	
		Fuel	Heat Transfer Disk		Fuel	Heat Transfer Disk		Fuel	Heat Transfer Disk
23.0	20	190	189	27	724	641	20	724[2]	680[2]
20.0	23	188	188	30	728	628	600[1]	728/708	664/664
17.6	27	188	187	33	731	617	600[1]	731/672	651/624
14.0	30	178	177	40	732	596	600[1]	732/613	630/559
11.0	35	169	168	52	730	575	600[1]	730/555	611/495
8.0	40	155	155	103	731	557	600[1]	731/483	595/412

1. Duration is defined based on a test time of 30 days for abnormal regimes, as described in PNL-4835 [34].
2. Since the time in helium is limited for the 23 kW configuration, only the maximum temperatures are listed.

Table 4.4.3-6 Maximum Limiting Component Temperatures in Transient Operations for the Reduced Heat Load Cases for PWR Fuel after In-Pool Cooling

Heat Load (kW)	In-Pool (helium)			Vacuum			Helium		
		End Temperature (°F)			Maximum Temperature (°F)[2]			Max. Temp. / Temp. at Steady-state (°F)	
	Duration (hours)	Fuel	Heat Transfer Disk	Duration[1] (hours)	Fuel	Heat Transfer Disk	Duration (hours)	Fuel	Heat Transfer Disk
23.0	24	491	415	14	724	641	20	724[4]	680[4]
20.0	24	477	397	17	728	628	600[3]	728/708	664/664
17.6	24	465	383	20	731	617	600[3]	731/672	651/624
14.0	24	445	360	26	732	596	600[3]	732/613	630/559
11	24	422	334	38	730	575	600[3]	730/555	611/495
8	24	390	293	89	731	557	600[3]	731/483	595/412

1. The maximum allowable time in the Technical Specification for this condition is equal to 2 hours less than the maximum allowable time shown in this table. This 2-hour reduction allows the handling time required to enter the next stage.
2. The maximum temperatures at the end of the first vacuum (Table 4.4.3-5) are conservatively presented.
3. Duration is defined based on a test time of 30 days for abnormal regimes as described in PNL-4835.
4. Since the time in helium is limited for the 23 kW configuration, only the maximum temperatures are listed.

Table 4.4.3-7 Maximum Limiting Component Temperatures in Transient Operations for the Reduced Heat Load Cases for PWR Fuel after Forced-Air Cooling

Heat Load (kW)	Forced-Air (helium)			Vacuum			Helium		
		End Temperature (°F)			Maximum Temperature (°F)[2]			Max. Temp. / Temp. at Steady-state (°F)	
	Duration (hours)	Fuel	Heat Transfer Disk	Duration[1] (hours)	Fuel	Heat Transfer Disk	Duration (hours)	Fuel	Heat Transfer Disk
23.0	24	621	564	5	724	641	20	724[4]	680[4]
20.0	24	591	530	8	728	628	600[3]	728/708	664/664
17.6	24	567	502	11	731	617	600[3]	731/672	651/624
14.0	24	530	458	18	732	596	600[3]	732/613	630/559
11	24	493	415	29	730	575	600[3]	730/555	611/495
8	24	450	363	80	731	557	600[3]	731/483	595/412

1. The maximum allowable time in the Technical Specification for this condition is equal to 2 hours less than the maximum allowable time shown in this table. This 2-hour reduction allows the handling time required to enter the next stage.
2. The maximum temperatures at the end of the first vacuum (Table 4.4.3-5) are conservatively presented.
3. Duration is defined based on a test time of 30 days for abnormal regimes as described in PNL-4835.
4. Since the time in helium is limited for the 23 kW configuration, only the maximum temperatures are listed.

4.5 Thermal Evaluation for Site Specific Spent Fuel

This section presents the thermal evaluation of fuel assemblies or configurations, which are unique to specific reactor sites or which differ from the UMS® Storage System design basis fuel. These site specific configurations result from conditions that occurred during reactor operations, participation in research and development programs, and from testing programs intended to improve reactor operations. Site specific fuel includes fuel assemblies that are uniquely designed to accommodate reactor physics, such as axial fuel blanket and variable enrichment assemblies, and fuel that is classified as damaged. Damaged fuel includes fuel rods with cladding that exhibit defects greater than pinhole leaks or hairline cracks.

Site specific fuel assembly configurations are either shown to be bounded by the analysis of the standard design basis fuel assembly configuration of the same type (PWR or BWR), or are shown to be acceptable contents by specific evaluation.

4.5.1 Maine Yankee Site Specific Spent Fuel

The standard spent fuel assembly for the Maine Yankee site is the Combustion Engineering (CE) 14×14 fuel assembly. Fuel of the same design has also been supplied by Westinghouse and by Exxon. The standard 14×14 fuel assembly is included in the population of the design basis PWR fuel assemblies for the UMS® Storage System (See Table 2.1.1-1). The maximum decay heat for the standard Maine Yankee fuel is the design basis heat load for the PWR fuels (23 kW total, or 0.958 kW per assembly). This heat load is bounded by the thermal evaluations in Section 4.4 for the normal conditions of storage, Section 4.4.3.1 for less than design basis heat loads and Chapter 11 for off-normal and accident conditions.

Some Maine Yankee site specific fuel has a burnup greater than 45,000 MWD/MTU, but less than 50,000 MWD/MTU. As shown in Table B2-6 in Appendix B of the Amendment 3 Technical Specifications, loading of fuel assemblies in this burnup range is subject to preferential loading in designated basket positions in the Transportable Storage Canister. Certain fuel assemblies in this burnup range must be loaded in one of the two configurations of the Maine Yankee Fuel Can.

The site specific fuels included in this evaluation are:

1. Consolidated fuel rod lattices consisting of a 17 × 17 lattice fabricated with 17 × 17 grids, 4 stainless steel support rods and stainless steel end fittings. One of these

lattices contains 283 fuel rods and 2 rod position vacancies. The other contains 172 fuel rods, with the remaining rod position locations either empty or containing stainless steel dummy rods.

2. Standard fuel assemblies with a Control Element Assembly (CEA) inserted in each one.
3. Standard fuel assemblies that have been modified by removing damaged fuel rods and replacing them with stainless steel dummy rods, solid zirconium rods, or 1.95 wt % enriched fuel rods.
4. Standard fuel assemblies that have had the burnable poison rods removed and replaced with hollow zirconium alloy tubes.
5. Standard fuel assemblies with in-core instrument thimbles stored in the center guide tube.
6. Standard fuel assemblies that are designed with variable enrichment (radial) and axial blankets.
7. Standard fuel assemblies that have some fuel rods removed.
8. Standard fuel assemblies that have damaged fuel rods.
9. Standard fuel assemblies that have some type of damage or physical alteration to the cage (fuel rods are not damaged).
10. Two (2) rod holders, designated CF1 and CA3. CF1 is a lattice having approximately the same dimensions as a standard fuel assembly. It is a 9×9 array of tubes, some of which contain damaged fuel rods. CA3 is a previously used fuel assembly lattice that has had all of the rods removed, and in which damaged fuel rods have been inserted.
11. Standard fuel assemblies that have damaged fuel rods stored in their guide tubes.
12. Standard fuel assemblies with inserted startup sources and other non-fuel items.

The Maine Yankee site specific fuels are also described in Section 1.3.2.1.

The thermal evaluations of these site specific fuels are provided in Section 4.5.1.1. Section 4.5.1.2 presents the evaluation of the Maine Yankee preferential loading of fuel exceeding the design basis heat load (0.958 kW) per assembly on the basket periphery.

4.5.1.1 Thermal Evaluation for Maine Yankee Site Specific Spent Fuel

The maximum heat load per assembly for site specific fuel considered in this section is limited to the design basis heat load (0.958 kW). The evaluation of fuel configurations having a greater heat load is presented in Section 4.5.1.2.

4.5.1.1.1 Consolidated Fuel

There are two (2) consolidated fuel lattices. One lattice contains 283 fuel rods and the other contains 172 fuel rods. Conservatively, only one consolidated fuel lattice is loaded in any Transportable Storage Canister.

The maximum decay heat of the consolidated fuel lattice having 283 fuel rods is 0.279 kW. This heat load is bounded by the design basis PWR fuel assembly, since it is less than one-third of the design basis heat load.

The second consolidated fuel lattice has 172 fuel rods with 76 stainless steel dummy rods at the outer periphery of the lattice. Due to the existence of the stainless steel rods, the effective thermal conductivities of this assembly may be slightly lower than those of the standard CE 14×14 fuel assembly. While the stainless steel rods provide better conductance in the axial direction, the radiation heat transfer is less effective at the surface of stainless steel rods, as compared to the standard fuel rods. The radiation is a function of surface emissivity and the emissivity for stainless steel (0.36) is less than one-half of that for zirconium alloy (0.75). A parametric study is performed to demonstrate that the thermal performance of the UMS PWR basket loading configuration consisting of 23 standard CE 14×14 fuel assemblies and the consolidated fuel lattice with stainless rods is bounded by that of the configuration consisting of 24 standard CE 14×14 fuel assemblies. Two finite element models are used in the study: a two-dimensional fuel assembly model and a three-dimensional periodic canister internal model.

The two-dimensional model is used to determine the effective thermal conductivities of the consolidated fuel lattice with stainless steel rods. Considering the symmetry of the consolidated fuel, the finite element model represents a one-quarter section as shown in Figure 4.5.1.1-1. The methodology used in Section 4.4.1.5 for the two-dimensional fuel model for PWR fuel is employed in this model. The model includes the fuel pellets, cladding, helium between the fuel rods, and helium occupying the gap between the fuel pellets and cladding. In addition, the

rods at the two outer layers are modeled as solid stainless steel rods to represent the configuration of this consolidated fuel lattice. Modes of heat transfer modeled include conduction and radiation between individual rods for steady-state condition. ANSYS PLANE55 conduction elements and LINK31 radiation elements are used in the model. Radiation elements are defined between rods and from rods to the boundary of the model. The effective conductivity for the fuel is determined using the procedure described in Section 4.4.1.5.

The three-dimensional periodic canister internal model consists of a periodic section of the canister internals. The model contains one support disk with two heat transfer disks (half thickness) on its top and bottom, the fuel assemblies, the fuel tubes and the helium in the canister, as shown in Figure 4.5.1.1-2. The purpose of this model is to compare the maximum fuel cladding temperatures of the following cases:

1) Base Case: All 24 positions loaded with standard CE 14×14 fuel assemblies.
2) Case 2: 23 positions with standard fuel, with one consolidated fuel lattice in position 2.
3) Case 3: 23 positions with standard fuel, with one consolidated fuel lattice in position 3.
4) Case 4: 23 positions with standard fuel, with one consolidated fuel lattice in position 4.
5) Case 5: 23 positions with standard fuel, with one consolidated fuel lattice in position 5.

Positions 2, 3, 4, and 5 are shown in Figure 4.5.1.1-3. Based on symmetry, these locations represent all of the possible locations for consolidated fuel in the basket.

The fuel assemblies and fuel tubes are represented by homogeneous regions with effective thermal conductivities. The effective conductivities for the consolidated fuel are determined by the two-dimensional fuel assembly model discussed above. The effective conductivities for the CE 14×14 fuel assemblies are established based on the model described in Section 4.4.1.5. Effective properties for the fuel tubes are determined by the two-dimensional fuel tube model in Section 4.4.1.6. Volumetric heat generation corresponding to the design basis heat load of 0.958 kW per assembly is applied to the CE 14×14 fuel regions in the model. Similarly, a heat generation rate corresponding to 0.279 kW is applied to the consolidated fuel assembly region. The heat conduction in the axial direction is conservatively ignored by assuming that the top and

bottom surfaces of the model are adiabatic. A constant temperature of 400°F is applied to the outer surface of the model as boundary conditions. Note that the maximum canister temperature is 351°F for PWR configurations for the normal condition of storage (Table 4.1-4). Steady state thermal analysis is performed for all five cases and the calculated maximum fuel cladding temperatures in the model are:

	Base Case	Case 2	Case 3	Case 4	Case 5
Maximum Fuel Cladding Temperature (°F)	755	733	738	740	740

As shown, the maximum temperatures for Cases 2 through 5 are less than those of the Base Case. It is concluded that the thermal performance of the configuration consisting of 23 standard CE 14×14 fuel assemblies and one consolidated fuel lattice is bounded by that of the configuration consisting of 24 standard CE 14×14 fuel assemblies. This study shows that a consolidated fuel lattice can be located in any basket position. However, as shown in Table B2-6 of Appendix B, the consolidated fuel assembly must be loaded in a corner position of the fuel basket (e.g., Position 5 shown in Figure 4.5.1.1-3).

4.5.1.1.2 Standard CE 14 × 14 Fuel Assemblies with Control Element Assemblies

A Control Element Assembly (CEA) consists of five solid B_4C rods encapsulated in stainless steel tubes. The B_4C material has a conductivity of 1.375 BTU/hr-in-°F. With the CEA inserted into the guide tubes of the CE 14×14 fuel assembly, the effective conductivity in the axial direction of the fuel assembly is increased because solid material replaces helium in the guide tubes. The change in the effective conductivity in the transverse direction of the fuel assembly is negligible since the CEA is inside of the guide tubes. Note that the total heat load, including the small amount of extra heat generated by the CEA, remains below the design basis heat load. Therefore, the thermal performance of the fuel assemblies with CEAs inserted is bounded by that of the standard fuel assemblies.

4.5.1.1.3 Modified Standard Fuel Assemblies

These assemblies include those standard fuel assemblies that have been modified by removing damaged fuel rods and replacing them with stainless steel dummy rods, solid zirconium rods or 1.95 wt % enriched fuel rods.

The maximum number of fuel rods replaced by stainless steel rods is six (6) per assembly, which is about 3% of the total number of fuel rods in each assembly (176). The conductivity of the stainless steel is similar to that of zirconium alloy and better than that of the UO_2. The resultant increase in effective conductivity of the modified fuel assembly in the axial direction offsets the decrease in the effective conductivity in the transverse direction (due to slight reduction of radiation heat transfer at the surface of the stainless steel rods). The maximum number of fuel rods replaced by solid zirconium alloy rods is five (5) per assembly. Since the solid zirconium alloy rod has a higher conductivity than the fuel rod (UO_2 with zirconium alloy clad), the effective conductivity of the repaired fuel assembly is increased. The thermal properties for the enriched fuel rod remain the same as for standard fuel rods, so there is no change in effective conductivity of the fuel assembly results from the use of fuel rods enriched to 1.95 wt % ^{235}U. These rods replace other fuel rods in the assembly after the first or second burnup cycles were completed. Therefore, these replacement fuel rods have been burned a minimum of one cycle less than the remainder of the assembly, producing a proportionally lower per rod heat load. The heat load (on a per rod basis) of the fuel rods in a standard assembly, bounds the heat load of the 1.95 wt % ^{235}U enriched fuel rods. Consequently, the loading of modified fuel assemblies is bounded by the thermal evaluation of the standard fuel assembly.

4.5.1.1.4 Use of Hollow Zirconium Alloy Tubes

Certain standard fuel assemblies have had the burnable poison rods removed. These rods were replaced with hollow zirconium alloy tubes.

There are 16 locations where burnable poison rods were removed and hollow zirconium alloy tubes were installed in their place. Since the maximum heat load for these assemblies is 0.552 kW per assembly (less than two-thirds of the design basis heat load) and the number of hollow zirconium alloy tubes is only about one-tenth (16/176) of the total number of the fuel rods, the thermal performance of these fuel assemblies is bounded by that of the standard fuel assemblies.

4.5.1.1.5 Standard Fuel with In-core Instrument Thimbles

Certain fuel assemblies have in-core instrument thimbles stored within the center guide tube of each fuel assembly. Storing an in-core instrument thimble assembly in the center guide tube of a fuel assembly will slightly increase the axial conductance of the fuel assembly (helium replaced by solid material). Therefore, there is no negative impact on the thermal performance of the fuel

Chapter 5

MCBEND Monte Carlo calculations are performed for each source type present in each source region. This approach entails seven separate analyses, encompassing fuel neutron, fuel gamma, fuel n-gamma (secondary gammas arising from neutron interaction in the shield), fuel region hardware, upper plenum, and upper and lower end-fitting gamma sources. Typically, a total of 5 to 20 million histories are tracked to yield dose rate profiles for each model. These cases are analyzed for azimuthally divided radial detectors at the concrete cask air inlets and outlets.

5.3.4.1 MCBEND Fuel Assembly Model

Based on the fuel assembly physical parameters provided in Table 5.2-27 and the hardware masses in Table 5.2-30, homogenized treatments of fuel assembly source regions are developed. The homogenized fuel assembly is represented in the model as a stack of boxes with width equal to the fuel assembly width. The height of each box corresponds to the modeled height of the corresponding assembly region.

The active fuel region homogenizations for the two design basis assemblies are shown in Table 5.3-6. The non-fuel assembly material is void for dry storage conditions. The clad region is zirconium alloy (density 6.55 g/cm^3). The resulting fuel compositions on an atom/barn-cm basis are shown in Table 5.3-8.

Fuel assembly non-fuel regions are homogenized as shown in Table 5.3-7. Volume fractions of material are based on the modeled regional volume and the volume of stainless steel present. The stainless steel volume is computed from the modeled mass and density (7.92 g/cm^3).

5.3.4.2 MCBEND Basket Model

For a given fuel type, the MCBEND description of the basket elements forms a common sub-model employed in the PWR and BWR concrete cask analyses. The key feature of the model is the detailed representation of the geometry of the basket support and heat transfer disks.

5.3.4.3 MCBEND Concrete Cask Model

The three-dimensional model of the vertical concrete cask containing design basis fuel is based on the explicit modeling of the basket, and the following features of the storage cask:

- Heat transfer annulus.
- Carbon steel weldment with cutouts for inlets and outlets.
- Concrete shield with cutouts for inlets and outlets.

- Air outlet model including carbon steel channel walls.
- Air inlet model including baffle pipes and carbon steel channel walls.
- Carbon steel shield plug with 1.0-inch NS-4-FR and 68-inch outer diameter steel cap.
- Carbon steel top lid.
- Carbon steel bottom base plate.
- Carbon steel support stand with four cutouts for air flow.
- Carbon steel shield ring.
- Carbon steel storage cask bottom.
- Concrete pad below base plate.

Detailed model parameters used in creating the three-dimensional model are taken directly from the License drawings. Elevations associated with the concrete cask three-dimensional features are established with respect to the bottom plate of the canister for the global model. The three-dimensional concrete cask model is shown in Figures 5.3-7 and 5.3-8.

5.3.5 Shield Regional Densities

Shield regional densities for the SAS1 and SAS4 analysis of the transfer and concrete casks are discussed in Section 5.3.5.1. Shield regional densities for the MCBEND analysis of the storage cask air inlets and outlets are discussed in Section 5.3.5.2.

5.3.5.1 SCALE Shield Regional Densities

The SCALE 4.3 standard composition library [11] default compositions and isotopic distributions are used unless otherwise indicated. The composition densities before homogenization are:

Material	Density (g/cm^3)
UO_2	10.412
Zirconium Alloy	6.56
H_2O	0.9982
Type 304 Stainless Steel	7.92
Lead	11.344
Aluminum	2.702
Neutron Absorber (core)	2.623
NS-4-FR	1.68
Concrete	2.243
Carbon Steel	7.821

Figure 5.3-8 MCBEND Three-Dimensional Vertical Concrete Cask Model – Radial Dimensions

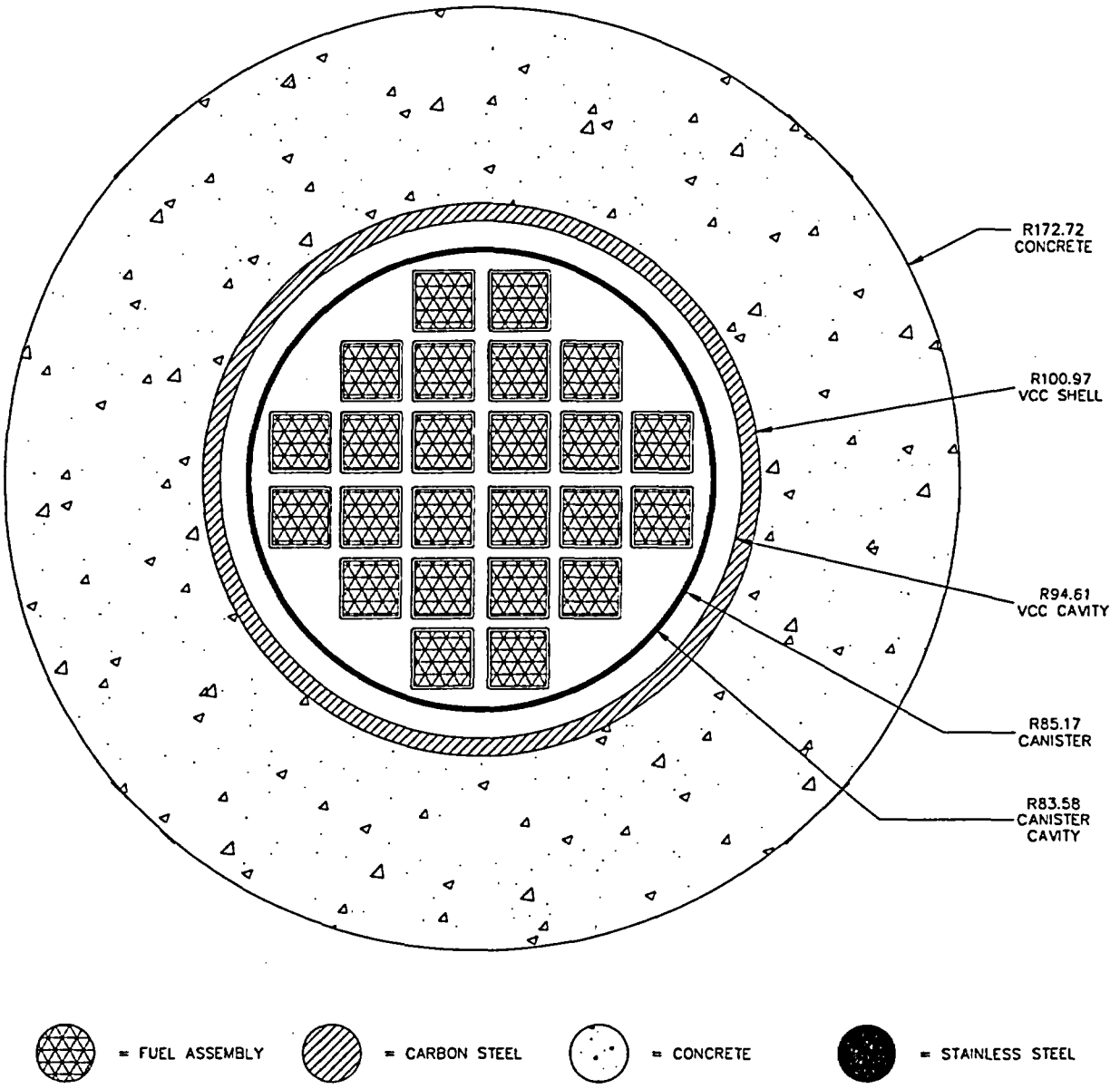

Table 5.3-1 SCALE PWR Dry Canister Material Densities

Material	Mixture ID	SCL Name	Density [g/cm^3]	27N-18G Library Nuclide	Density [a/barn-cm]
Fuel Region	1	UO2	2.1530	BORON-10	1.9090E-04
		ZIRC. ALLOY	0.4494	BORON-11	7.6839E-04
		SS304	0.3807	CARBON-12	2.3982E-04
		AL	0.0894	OXYGEN-16	9.6038E-03
		B4C	0.0220	ALUMINUM	1.9953E-03
				CHROMIUM(SS304)	8.3776E-04
				MANGANESE	8.3462E-05
				IRON(SS304)	2.8532E-03
				NICKEL(SS304)	3.7112E-04
				ZIRC. ALLOY	2.9669E-03
				URANIUM-234	2.6411E-07
				URANIUM-235	3.4574E-05
				URANIUM-238	4.7671E-03
Fuel Region Annulus (One-D only)	2	SS304	0.7691	ALUMINUM	5.6780E-03
		AL	0.2544	CHROMIUM(SS304)	1.6925E-03
				MANGANESE	1.6861E-04
				IRON(SS304)	5.7642E-03
				NICKEL(SS304)	7.4975E-04
Upper Plenum	3	ZIRC. ALLOY	0.4494	CHROMIUM(SS304)	2.2706E-03
		SS304	1.0318	MANGANESE	2.2621E-04
				IRON(SS304)	7.7330E-03
				NICKEL(SS304)	1.0058E-03
				ZIRC. ALLOY	2.9669E-03
Upper Plenum Annulus (One-D only)	4	SS304	0.6101	CHROMIUM(SS304)	1.3426E-03
				MANGANESE	1.3375E-04
				IRON(SS304)	4.5725E-03
				NICKEL(SS304)	5.9475E-04
Upper End Fitting	5	SS304	1.2537	CHROMIUM(SS304)	2.7589E-03
				MANGANESE	2.7485E-04
				IRON(SS304)	9.3961E-03
				NICKEL(SS304)	1.2222E-03
Upper End Fitting Annulus (One-D only)	6	SS304	1.1366	CHROMIUM(SS304)	2.5012E-03
				MANGANESE	2.4918E-04
				IRON(SS304)	8.5185E-03
				NICKEL(SS304)	1.1080E-03
Lower End Fitting	9	SS304	1.4554	CHROMIUM(SS304)	3.2027E-03
				MANGANESE	3.1907E-04
				IRON(SS304)	1.0908E-02
				NICKEL(SS304)	1.4188E-03
Lower End Fitting Annulus (One-D only)	10	SS304	1.7805	CHROMIUM(SS304)	3.9181E-03
				MANGANESE	3.9035E-04
				IRON(SS304)	1.3344E-02
				NICKEL(SS304)	1.7357E-03

Table 5.3-2 SCALE PWR Wet Canister Material Densities

Material	Mixture ID	SCL Name	Density [g/cm^3]	27N-18G Library Nuclide	Density [a/barn-cm]
Fuel	1	UO2	2.1530	HYDROGEN	4.1824E-02
		ZIRC. ALLOY	0.4494	BORON-10	1.9090E-04
		SS304	0.3807	BORON-11	7.6839E-04
		AL	0.0894	CARBON-12	2.3982E-04
		B4C	0.0220	OXYGEN-16	3.0516E-02
		H2O	VF=0.6264	ALUMINUM	1.9953E-03
				CHROMIUM(SS304)	8.3776E-04
				MANGANESE	8.3462E-05
				IRON(SS304)	2.8532E-03
				NICKEL(SS304)	3.7112E-04
				ZIRC.ALLOY	2.9669E-03
				URANIUM-234	2.6411E-07
				URANIUM-235	3.4574E-05
				URANIUM-238	4.7671E-03
Fuel Region Annulus (One-D only)	2	SS304	0.7691	HYDROGEN	5.3996E-02
		AL	0.2544	OXYGEN-16	2.6998E-02
		H2O	VF=0.8087	ALUMINUM	5.6780E-03
				CHROMIUM(SS304)	1.6925E-03
				MANGANESE	1.6861E-04
				IRON(SS304)	5.7642E-03
				NICKEL(SS304)	7.4975E-04
Upper Plenum	3	ZIRC. ALLOY	0.4494	HYDROGEN	3.9127E-02
		SS304	1.0318	OXYGEN-16	1.9563E-02
		H2O	VF=0.5860	CHROMIUM(SS304)	2.2706E-03
				MANGANESE	2.2621E-04
				IRON(SS304)	7.7330E-03
				NICKEL(SS304)	1.0058E-03
				ZIRC. ALLOY	2.9669E-03
Upper Plenum Annulus (One-D only)	4	SS304	0.6101	HYDROGEN	6.1628E-02
		H2O	VF=0.9230	OXYGEN-16	3.0814E-02
				CHROMIUM(SS304)	1.3426E-03
				MANGANESE	1.3375E-04
				IRON(SS304)	4.5725E-03
				NICKEL(SS304)	5.9475E-04
Upper End Fitting	5	SS304	1.2537	CHROMIUM(SS304)	2.7589E-03
				MANGANESE	2.7485E-04
				IRON(SS304)	9.3961E-03
				NICKEL(SS304)	1.2222E-03
Upper End Fitting Annulus (One-D only)	6	SS304	1.1366	CHROMIUM(SS304)	2.5012E-03
				MANGANESE	2.4918E-04
				IRON(SS304)	8.5185E-03
				NICKEL(SS304)	1.1080E-03

Table 5.3-2 SCALE PWR Wet Canister Material Densities (continued)

Material	Mixture ID	SCL Name	Density [g/cm^3]	27N-18G Library Nuclide	Density [a/barn-cm]
Lower End Fitting	9	SS304 H2O	1.4554 VF=0.8162	HYDROGEN OXYGEN-16 CHROMIUM(SS304) MANGANESE IRON(SS304) NICKEL(SS304)	5.4497E-02 2.7249E-02 3.2027E-03 3.1907E-04 1.0908E-02 1.4188E-03
Lower End Fitting Annulus (One-D only)	10	SS304 H2O	1.7805 VF=0.7752	HYDROGEN OXYGEN-16 CHROMIUM(SS304) MANGANESE IRON(SS304) NICKEL(SS304)	5.1760E-02 2.5880E-02 3.9181E-03 3.9035E-04 1.3344E-02 1.7357E-03

Table 5.3-3 SCALE BWR Dry Canister Material Densities

Material	Mixture ID	SCL Name	Density [g/cm^3]	27N-18G Library Nuclide	Density [a/barn-cm]
Fuel	1	UO2	1.9583	BORON-10	5.1195E-05
		ZIRC.ALLOY	0.6769	BORON-11	2.0607E-04
		SS304	0.2228	CARBON-12	1.6127E-04
		CARBON STEEL	0.1932	OXYGEN-16	8.7353E-03
		AL	0.0874	ALUMINUM	1.9507E-03
		B4C	0.0059	CHROMIUM(SS304)	4.9029E-04
				MANGANESE	4.8845E-05
				IRON	2.0626E-03
				IRON(SS304)	1.6698E-03
				NICKEL(SS304)	2.1719E-04
				ZIRC.ALLOY	4.4688E-03
				URANIUM-234	2.4022E-07
				URANIUM-235	3.1447E-05
				URANIUM-238	4.3360E-03
Fuel Region Annulus	2	CARBON STEEL	1.2195	CARBON-12	6.1200E-04
		AL	0.1404	ALUMINUM	3.1336E-03
				IRON	1.3019E-02
Upper Plenum	3	ZIRC. ALLOY	0.6551	CARBON-12	7.4574E-05
		SS304	0.2198	CHROMIUM(SS304)	4.8369E-04
		CARBON STEEL	0.1486	MANGANESE	4.8188E-05
				IRON	1.5864E-03
				IRON(SS304)	1.6473E-03
				NICKEL(SS304)	2.1427E-04
				ZIRC. ALLOY	4.3248E-03
Upper Plenum Annulus	4	CARBON STEEL	0.9381	CARBON-12	4.7078E-04
				IRON	1.0015E-02
Upper End Fitting	5	SS304	0.5708	CHROMIUM(SS304)	1.2561E-03
				MANGANESE	1.2514E-04
				IRON(SS304)	4.2780E-03
				NICKEL(SS304)	5.5644E-04
Upper End Fitting Annulus	6	SS304	0.8665	CHROMIUM(SS304)	1.9068E-03
				MANGANESE	1.8997E-04
				IRON(SS304)	6.4942E-03
				NICKEL(SS304)	8.4470E-04
Lower End Fitting	9	SS304	1.4132	CHROMIUM(SS304)	3.1099E-03
				MANGANESE	3.0982E-04
				IRON(SS304)	1.0592E-02
				NICKEL(SS304)	1.3776E-03
Lower End Fitting Annulus	10	SS304	1.0283	CHROMIUM(SS304)	2.2629E-03
				MANGANESE	2.2544E-04
				IRON(SS304)	7.7068E-03
				NICKEL(SS304)	1.0024E-03

Table 5.3-4 SCALE BWR Wet Canister Material Densities

Material	Mixture ID	SCL Name	Density [g/cm^3]	27N-18G Library Nuclide	Density [a/barn-cm]
Fuel	1	UO2	1.9583	HYDROGEN	4.0869E-02
		ZIRC. ALLOY	0.6769	BORON-10	5.1195E-05
		SS304	0.2228	BORON-11	2.0607E-04
		CARBON STEEL	0.1932	CARBON-12	1.6127E-04
		AL	0.0874	OXYGEN-16	2.9170E-02
		B4C	0.0059	ALUMINUM	1.9507E-03
		H2O	0.6121	CHROMIUM(SS304)	4.9029E-04
				MANGANESE	4.8845E-05
				IRON	2.0626E-03
				IRON(SS304)	1.6698E-03
				NICKEL(SS304)	2.1719E-04
				ZIRC. ALLOY	4.4688E-03
				URANIUM-234	2.4022E-07
				URANIUM-235	3.1447E-05
				URANIUM-238	4.3360E-03
Fuel Region Annulus	2	CARBON STEEL	1.2195	HYDROGEN	5.2888E-02
		AL	0.1404	CARBON-12	6.1200E-04
		H2O	0.7921	OXYGEN-16	2.6444E-02
				ALUMINUM	3.1336E-03
				IRON	1.3019E-02
Upper Plenum	3	ZIRC.ALLOY	0.6551	HYDROGEN	4.3814E-02
		SS304	0.2198	CARBON-12	7.4574E-05
		CARBON STEEL	0.1486	OXYGEN-16	2.1907E-02
		H2O	0.6562	CHROMIUM(SS304)	4.8369E-04
				MANGANESE	4.8188E-05
				IRON	1.5864E-03
				IRON(SS304)	1.6473E-03
				NICKEL(SS304)	2.1427E-04
				ZIRC. ALLOY	4.3248E-03
Upper Plenum Annulus	4	CARBON STEEL	0.9381	HYDROGEN	5.8764E-02
		H2O	0.8801	CARBON-12	4.7078E-04
				OXYGEN-16	2.9382E-02
				IRON	1.0015E-02
Upper End Fitting	5	SS304	0.5708	CHROMIUM(SS304)	1.2561E-03
				MANGANESE	1.2514E-04
				IRON(SS304)	4.2780E-03
				NICKEL(SS304)	5.5644E-04
Upper End Fitting Annulus	6	SS304	0.8665	CHROMIUM(SS304)	1.9068E-03
				MANGANESE	1.8997E-04
				IRON(SS304)	6.4942E-03
				NICKEL(SS304)	8.4470E-04

5.6.1 Shielding Evaluation for Maine Yankee Site Specific Spent Fuel

This analysis considers both assembly fuel sources and sources from activated non-fuel material such as control element assemblies (CEA), in-core instrument (ICI) segments, and fuel assemblies containing activated stainless steel replacement (SSR) rods and other non-fuel material, including neutron sources. It considers the consolidated fuel, damaged fuel, and fuel debris present in the Maine Yankee spent fuel inventory, in addition to those fuel assemblies having a burnup between 45,000 and 50,000 MWD/MTU.

The Maine Yankee spent fuel inventory also contains fuel assemblies with hollow zirconium alloy tubes, removed fuel rods, axial blankets, poison rods, variable radial enrichment, and low enriched substitute rods. These components do not result in additional sources to be considered in shielding evaluations and are, therefore, enveloped by the standard fuel assembly evaluation. For shielding considerations of the variable radial enrichment assemblies, the planar-average enrichment is employed in determining minimum cool times. As described in Section 6.6.1.2.2, fuel assemblies with variable radial enrichment incorporate fuel rods that are enriched to one of two levels of enrichment. Fuel assemblies that also incorporate axial blankets are described in Section 6.6.1.2.3. Axial blankets consist of annular fuel pellets enriched to 2.6 wt % ^{235}U, used in the top and bottom 5% (≈ 7 inches) of the active fuel length. The remaining active fuel length of the fuel rod is enriched to one of two levels of enrichment incorporated in the fuel design.

5.6.1.1 Fuel Source Term Description

Maine Yankee utilized 14×14 array size fuel based on designs provided by Combustion Engineering, Westinghouse, and Exxon Nuclear. The previously analyzed Combustion Engineering CE 14×14 standard fuel design is selected as the design basis for this analysis because its uranium loading is the highest of the three vendor fuel types, based on a 0.3765-inch nominal fuel pellet diameter, a 137-inch active fuel length, and a 95% theoretical fuel density. This results in a fuel mass of 0.4037 MTU. This exceeds the maximum reported Maine Yankee fuel mass of 0.397 MTU and, therefore, produces bounding source terms. The SAS2H model of the CE 14×14 assembly (shown in Figure 5.6.1-1) at a nominal burnup of 40,000 MWD/MTU and initial enrichment of 3.7 wt % ^{235}U, is based on data provided in Table 2.1.1-1.

Source terms for various combinations of burnup and initial enrichment are computed by adjusting the SAS2H BURN parameter to model the desired burnup and specifying the initial enrichment in the Material Information Processor input for UO_2.

5.6.1.1.1 Control Element Assemblies (CEA)

For the CEA evaluation, the assumptions are:

1. The irradiated portion of the CEA assembly is limited to the CEA tips since during normal operation the elements are retracted from the core and only the tips are subject to significant neutron flux.
2. The CEA tips are defined as that portion present in the "Gas Plenum" neutron source region in the Characteristics Database (CDB) [10].
3. Material subject to activation in the CEA tips is limited to stainless steel, Inconel and Ag-In-Cd in the tip of the CEA absorber rods. Stainless steel and Inconel is assumed to have a concentration of 1.2 g/kg ^{59}Co. The CDB indicates that a total of 2.495 kg/CEA of this material is present in the Gas Plenum region of the core during operation. The Ag-In-Cd alloy present in the gas plenum region during core operation is approximately 80% silver and weighs 2.767 kg/CEA.
4. The irradiated CEA material is assumed to be present in the lower 8 inches of the active fuel region when inserted in the assembly. The location of the CEA source is based on the relative length of the fuel assembly and CEA rods and the insertion depth of the CEA spider into the top end-fitting.
5. The decay heat generated in the most limiting CEA at 5 years cool time is 2.16 W/kg of activated steel and inconel, and 3.11 W/kg of activated Ag-In-Cd. Although longer cool times are considered in this analysis for the fuel source term, this decay heat generation rate is conservatively used for all longer CEA cool times. For a cask fully loaded with fuel assemblies containing design basis CEAs, the additional heat generation due to the CEAs amounts to (2.16 W/kg × 2.495 kg/CEA + 3.11 × 2.767 kg/CEA)(24 CEA/cask) = 336 W/cask, which is conservatively rounded to 350 W/cask.

Since the activated portion of the CEA is present only in the lower 8 inches of the active fuel, an adjustment to the one-dimensional dose rate limit is derived based on detailed three-dimensional results obtained for the CE 14×14 fuel with and without a CEA present.

Table 5.6.1-1 shows the activation history for CEAs employed at Maine Yankee. Based on this data, individual source term calculations are performed for each CEA group, and a single

bounding CEA description is determined based on the maximum computed source rate as of January 1, 2001. The bounding CEA description is based on CEA group "A1-A8," and the resulting CEA spectra at 5, 10 15, and 20 years cool time are shown in Table 5.6.1-2.

5.6.1.1.2 In-Core Instrument (ICI) Thimbles

Activation of ICI thimble material is determined by accumulating the hardware activation incurred during each cycle the ICI thimble is present in the reactor core. The ICI thimbles are first grouped according to exposure history as shown in Table 5.6.1-3. The cycle exposure data for each Maine Yankee cycle is shown in Table 5.6.1-4. With these data, the accumulated hardware source is obtained by summing the contributions made from each cycle of exposure. It is assumed that:

1. The average cycle exposure is sufficient to represent the ICI thimble exposure during each cycle.
2. Spectral differences between hardware source terms are insignificant.
3. The ICI thimble activated hardware source rate does not decrease after January 1, 2001.
4. The ICI thimble activated hardware spectrum is assumed to be identical to the fuel activated hardware spectrum in distribution, but not total source strength, i.e., the majority of the source is the result of ^{60}Co at a fixed spectrum.

The portion of the ICI thimble present in the active fuel region during reactor operation is composed entirely of zirconium alloy and receives no significant activation. The activated components of the ICI thimble are present in the upper end fitting region of the core, and the material is assumed to be irradiated at a flux factor of 0.1 consistent with the activation ratio used for upper end fitting hardware. A total mass of 0.664 kg/ICI thimble of activated material (assumed to be stainless steel with an initial ^{59}Co concentration of 1.2 g/kg) is modeled in the upper end fitting region.

The resulting total source rate as of January 1, 2001, for the activated components of each ICI thimble group are shown in Table 5.6.1-3. ICI Thimble Group J has the highest source rate (1.4940E+13 γ/sec), and this value is selected as the design basis for the loading table analysis. Note that for the purposes of determining the required cool time for a fuel assembly containing a ICI thimble, no further decay of the ICI thimble is considered after January 1, 2001.

5.6.1.1.3 Stainless Steel Replacement Rods

Maine Yankee fuel assemblies containing stainless steel replacement (SSR) rods are listed in Table 5.6.1-5. Note that for "N" and "R" numbered fuel assemblies, the SSR rods are only subject to exposure after the first fuel assembly cycle of irradiation. For "U" numbered assemblies, the assemblies saw no additional exposure after the rods were inserted. Hence, these "U" numbered assemblies are not further considered since their SSR rods received no activation.

The SSR rod is assumed to be solid stainless steel with the same dimensions as a fuel rod and with an initial ^{59}Co concentration of 1.2 g/kg. The SSR rod mass is 2.91 kg/SSR. Hardware gamma source terms are generated for each of the SSR rods in Table 5.6.1-5 based on the one or two cycle exposure seen by the stainless steel rods in question. This additional hardware source is then used to increase the existing hardware source of the assembly.

5.6.1.1.4 Consolidated Fuel

There are two consolidated fuel lattices. The lattices house fuel rods taken from assemblies as shown in Table 5.6.1-6. Each lattice presents a 17×17 array, with top and bottom end fittings connected by solid steel connector rods. No explicit source term analysis is conducted for the consolidated fuel lattices themselves, instead, an analysis is presented based on the source term computed for the fuel assemblies from which the contents are derived.

5.6.1.2 Model Specification

The one- and three-dimensional models described in Section 5.3 are employed in this analysis. No modifications are required to the models except for the substitution of CE 14×14 homogenized source descriptions. These homogenizations are shown in Tables 5.6.1-7 through 5.6.1-9.

5.6.1.3 Shielding Evaluation

The shielding evaluation consists of a loading table analysis of the CE 14×14 fuel following the methodology developed in Section 5.5 (Minimum Allowable Cooling Time Evaluation for PWR and BWR fuel). Fuel assemblies which include non-fuel hardware are addressed explicitly. The results of the analysis are loading tables which give the required cool time for a particular fuel configuration.

No restrictions are placed on the loading locations for any of the non-fuel assembly hardware components. This implies that a canister may contain up to 24 CEAs, 24 ICI thimbles, or 24 steel substitute rod assemblies or any combination thereof as long as the most limiting cool time is selected for any of the components in the canister. Neither CEAs or ICI thimbles may be placed into an assembly containing steel substitute rods that have received core exposure. ICI thimbles and CEAs may be inserted in fuel assemblies that also have hollow zirconium alloy tubes replacing burnable poison rods, solid steel rods replacing fuel rods provided there has been no reactor core exposure of the steel rods, fuel assemblies with fuel rods removed from the lattice, fuel assemblies with variable enrichment or low enrichment replacement fuel rods, or axial blanket fuel assemblies. Due to physical constraints, ICI thimbles and CEAs cannot be located in the same assembly.

5.6.1.4 Standard Fuel Source Term

Results are obtained, for CE 14×14 fuel with no additional non-fuel material included, by following the minimum allowable cooling time evaluation (loading table analysis) methodology developed in Section 5.5. CE 14×14 source terms at various combinations of initial enrichment and burnup are computed using the CE 14×14 SAS2H model described in Section 5.6.1.1.

Following the methodology developed in Section 5.5, one-dimensional shielding calculations are performed for CE 14×14 fuel region sources at various combinations of initial enrichment, burnup, and cool time. The resulting dose rate and source term data is interpolated to determine the cool time required for each combination of enrichment and burnup to decay below the design basis limiting values of dose and heat generation rate.

The resulting loading table for CE 14×14 fuel with no additional non-fuel material is shown in Table 5.6.1-10.

In addition to the standard fuel evaluation, a preferential loading strategy is analyzed. The preferential loading configuration relies on placing higher heat load fuel assemblies on the periphery of the basket than would be allowed with a uniform loading strategy. Peripheral loadings are evaluated with decay heats of up to 1.05 kW per peripheral assembly. To maintain the maximum allowable heat load per basket of 23 kW, the maximum allowable per assembly heat load in the interior location of the basket is reduced to compensate for the higher heat load peripheral elements. Burnup and cool time combinations for peripheral and interior assemblies are listed in Table 5.6.1-10 as a function of initial enrichment. The cool time column for peripheral element and interior assembly loading is indicated by the "P" and "I" indicators in the column headings.

5.6.1.4.1 Control Element Assemblies (CEA)

The result of the analysis is a set of loading tables for Maine Yankee fuel giving the cool time required for a fuel assembly with a specified burnup and enrichment combination to contain a design basis CEA with a cool time of 5, 10, 15, or 20 years. Fuel assemblies containing CEAs will be loaded into Class 2 canisters, which are slightly longer than the Class 1 canisters used for bare fuel assemblies. The additional length is required to accommodate the CEA, which is inserted in the top of the fuel assembly.

The approach taken is to compute downward adjustments to the design basis one-dimensional dose rate limiting value for the storage cask (as specified in Table 5.5-3) which ensures that the fuel sources have decayed adequately to cover the effect of the additional source added as a result of CEA containment. The adjustment is determined on the basis of a conservative comparison of three-dimensional shielding analysis results for the original Class 1 canister containing CE 14×14 fuel assemblies and the Class 2 canister containing either no CEA or CEAs cooled to 5, 10, 15, or 20 years. Results for CEA cool times longer than 20 years are bounded by the 20 year results.

Assuming design basis CE 14×14 fuel with a burnup of 40,000 MWD/MTU, 3.7 wt % ^{235}U enrichment and a 5-year cool time, the additional CEA source results in a localized peak near the bottom of the transfer cask that results in a surface dose rate that is less than 500 mrem/hr. Since this is comparable to the no-CEA case, it is not necessary to extend cool time of fuel assemblies with CEAs inserted to account for an increased transfer cask surface dose.

Chapter 6

6.2 Spent Fuel Loading

The Universal Storage System is designed to store Transportable Storage Canisters containing spent nuclear fuel. Canisters of five different lengths are designed, each to accommodate one of three classes of PWR fuel assemblies or one of two classes of BWR fuel assemblies. The classification of the fuel assemblies is based primarily on fuel assembly length and cross-section. The classes of major fuel assemblies to be stored in the Universal Storage System and their characteristics are shown in Tables 6.2-1 (PWR) and 6.2-2 (BWR). Sections 6.4.5 and 6.4.6 extend the evaluation of the single PWR (4.2 wt. % ^{235}U) and BWR (4.0 wt. % ^{235}U) maximum initial enrichments to an assembly-specific maximum initial enrichment. The enrichments represent maximum planar average enrichment for BWR assemblies and peak fuel rod enrichments for PWR assemblies. Tables 6.2-1 and 6.2-2 include a column containing an identifier linking each of the listed assembly types to the allowable maximum initial enrichment searches in Sections 6.4.5 and 6.4.6.

Class 1 Westinghouse fuel assemblies and Class 2 B&W fuel assemblies include inserts. Fuel assembly inserts are nonfuel bearing components, such as flow mixers, in-core instrument thimbles and burnable poison rod inserts. These components are inserted into the fuel assembly guide tubes. The criticality analyses do not take credit for displacement of moderator by the inserts. For the unborated moderator analyses, insertion of an in-core instrument thimble or a burnable poison rod assembly reduces reactivity by further decreasing the (unborated) moderator to fuel ratio in the fuel assembly lattice. For the analyses that take credit for soluble boron in the moderator, insertion of an in-core instrument thimble or burnable poison rod assembly would displace boron for which credit is taken. Therefore, a burnable poison rod assembly or an in-core instrument thimble shall only be loaded into an assembly that does not require credit to be taken for soluble boron in the moderator in order to meet the assembly enrichment limit. Insertion of a flow mixer is not restricted, as this component does not displace moderator in the active fuel region.

To preclude a potential increase in reactivity as a result of empty fuel rod positions in the assembly, any empty fuel rod position is to be filled with a solid filler rod. Filler rods may be fabricated from either solid zirconium alloy or solid Type 304 stainless steel, or may be solid neutron absorber rods inserted for in-core reactivity control prior to reactor operations.

Table 6.2-1 PWR Fuel Assembly Characteristics (Zirc-4 Clad)

Fuel Class	Vendor	Array	Version	Max MTU	No of Fuel Rods	Pitch (in)	Rod Dia. (in)	Clad Thick (in)	Pellet Dia (in)	Active Length (in)	ID
1	CE	14 × 14	Std.	0.4037	176	0.5800	0.440	0.0280	0.3765	137.0	ce14a
1	CE	14 × 14	Ft Cal.	0.3772	176	0.5800	0.440	0.0280	0.3765	128.0	ce14a
1	CE	15 × 15	Palis.	0.4317	216	0.5500	0.418	0.0260	0.3580	132.0	—[1]
1	CE	16 × 16	Lucie 2	0.4025	236	0.5060	0.382	0.0250	0.3250	136.7	ce16d
1	Ex/ANF	14 × 14	WE	0.3689	179	0.5560	0.424	0.0300	0.3505	142.0	ex14a
1	Ex/ANF	14 × 14	CE	0.3814	176	0.5800	0.440	0.0310	0.3700	134.0	ce14a
1	Ex/ANF	14 × 14	Praire Isl.	0.3741	179	0.5560	0.417	0.0300	0.3505	144.0	—[1]
1	Ex/ANF	15 × 15	WE	0.4410	204	0.5630	0.424	0.0300	0.3565	144.0	ex15a
1	Ex/ANF	15 × 15	Palis	0.4310	216	0.5500	0.417	0.0300	0.3580	131.8	—[1]
1	Ex/ANF	17 × 17	WE	0.4123	264	0.4960	0.360	0.0250	0.3030	144.0	ex17a
1	WE	14 × 14	Std/ZCA	0.4144	179	0.5560	0.422	0.0225	0.3674	145.2	we14a
1	WE	14 × 14	OFA	0.3612	179	0.5560	0.400	0.0243	0.3444	144.0	we14b
1	WE	14 × 14	Std/ZCB	0.4144	179	0.5560	0.422	0.0225	0.3674	145.2	we14a
1	WE	14 × 14	CE Model	0.4115	176	0.5800	0.440	0.0260	0.3805	136.7	we14d
1	WE	15 × 15	Std	0.4646	204	0.5630	0.422	0.0242	0.3659	144.0	we15a
1	WE	15 × 15	Std/ZC	0.4646	204	0.5630	0.422	0.0242	0.3659	144.0	we15a
1	WE	15 × 15	OFA	0.4646	204	0.5630	0.422	0.0242	0.3659	144.0	we15a
1	WE	17 × 17	Std	0.4671	264	0.4960	0.374	0.0225	0.3225	144.0	we17a
1	WE	17 × 17	OFA	0.4282	264	0.4960	0.360	0.0225	0.3088	144.0	we17b
1	WE	17 × 17	Vant 5	0.4282	264	0.4960	0.360	0.0225	0.3088	144.0	we17b
2	B&W	15 × 15	Mark B	0.4807	208	0.5680	0.430	0.0265	0.3686	144.0	bw15a
2	B&W	15 × 15	Mark BZ	0.4807	208	0.5680	0.430	0.0265	0.3686	144.0	bw15a
2	B&W	17 × 17	Mark C	0.4658	264	0.5020	0.379	0.0240	0.3232	143.0	bw17a
3	CE	16 × 16	Sono 2&3	0.4417	236	0.5060	0.382	0.0230	0.3255	150.0	ce16e
3	CE	16 × 16	ANO2	0.4417	236	0.5060	0.382	0.0230	0.3255	150.0	ce16e
3	CE	16 × 16	SYS80	0.4417	236	0.5060	0.382	0.0230	0.3255	150.0	ce16e

1. These site specific fuels were not re-evaluated and remain at a maximum initial enrichment of 4.2 wt% ^{235}U.

PWR and BWR canisters. The fifth phase represents the UMS® storage and transfer cask model, which is the same for both canisters. In the first phase, a fuel assembly is constructed from the basic components of the fuel assembly, i.e., fuel rod, guide tube, instrument tube (water rods for the BWR assemblies) and nozzles. An array feature is used to form the rod arrangements. To minimize the complexity of these arrays, a check is made on all water rod or guide/instrument tubes to verify that they only occupy one lattice location. If the rod or tube exceeds one lattice location (such as the CE guide tubes), the tube or rod material is neglected from the model. Next the fuel assembly is placed into a fuel tube and surrounded by neutron absorber sheets. These fuel assemblies, with the fuel tube and attached neutron absorber, are then placed in a planar (x-y) configuration. The tubes are placed in the basket stack composed of bottom weldment, stainless steel or carbon steel support disks, aluminum heat transfer disks, and the top weldment. After completing the canister cavity model, a canister shell is placed around the basket with a structural and shield lid stacked on top of the basket. The appropriate cask shields then surround the canister.

6.3.4 Cask Regional Densities

The densities used in the criticality analyses are listed in the following table. Slight differences in the default densities employed by the SCALE and ANSWERS codes exist. These differences do not significantly impact the results of the criticality analysis. For the neutron absorber, densities for the BORAL core material and the METAMIC sheet are provided.

Material	ANSWERS Model Density (g/cc)	SCALE Model Density (g/cc)
UO_2	10.412 (95% theoretical)	10.412 (95% theoretical)
Zirconium alloy	6.55	6.56
H_2O	0.9982	0.9982
Stainless steel	7.93	7.92
Carbon steel	7.82	7.82
Lead	11.04	11.35
Aluminum	2.70	2.70
BORAL (core) PWR	2.60	2.60
BORAL (core) BWR	2.68	2.68
METAMIC (40% B_4C)	2.62	2.62
NS-4-FR	1.63	1.63
NS-3	1.65	1.65
Concrete	2.24	2.24
H_2O + H_3BO_3 (borated water) – Full Density – 1000 ppm Boron	1.0015	---

6.3.4.1 Active Fuel Region

Fuel rod densities for normal operations conditions are shown below.

Material	Element	Density (atoms/barn-cm)
UO_2 (4.2 wt % ^{235}U)	^{235}U	9.877×10^{-4}
	^{238}U	2.224×10^{-2}
	O	4.646×10^{-2}
UO_2 (4.0 wt % ^{235}U)	^{235}U	9.406×10^{-4}
	^{238}U	2.229×10^{-2}
	O	4.646×10^{-2}
Zirconium Alloy	Zr	4.331×10^{-2}
H_2O	H	6.677×10^{-2}
	O	3.338×10^{-2}
$H_2O + H_3BO_3$	H	6.675×10^{-2}
	O	3.346×10^{-2}
	B	5.581×10^{-5}
	O	3.338×10^{-2}

6.3.4.2 Cask Material

SCALE 4.3 model cask material densities used in the criticality evaluation are listed in the following table. With the exception of the slightly higher stainless steel and lower lead, default densities employed by the ANSWERS code, the material composition is identical between SCALE and ANSWERS models.

Material	Element	Density (atoms/barn-cm)
Neutron Absorber core	^{10}B	8.880×10^{-3} (75% of Nominal)
(0.025 g $^{10}B/cm^2$)	^{11}B	4.906×10^{-2}
	C	1.522×10^{-3}
	Al	2.694×10^{-2}
Neutron Absorber core	^{10}B	2.212×10^{-3} (75% of Nominal)
(0.011 g $^{10}B/cm^2$)	^{11}B	1.219×10^{-2}
	C	3.786×10^{-3}
	Al	5.217×10^{-2}

6.4 Criticality Calculation

6.4.1 Calculational or Experimental Method

As discussed earlier, criticality analysis of the Universal Storage System involves identification of fuel arrays for analysis, determination of most reactive PWR and BWR assemblies, and cask criticality analysis. Section 6.4.5 augments the evaluation of the most reactive PWR and BWR assemblies by determining assembly specific maximum initial enrichments.

6.4.1.1 Determination of Fuel Arrays for Criticality Analysis

As shown previously, the maximum values for physical dimensions, cross-sections, and weights vary among the fuel assemblies. Therefore, qualitatively determining one enveloping assembly for the criticality analysis is difficult. Thus, a set of standard fuel arrays in the basket configuration are selected and modeled with KENO-Va. Since the assembly is considered to be axially infinite in length, the selected standard PWR and BWR arrays that bound other assemblies in their sub classes and are as follows.

PWR Fuel Assemblies

- B&W 15×15 Mark B
- B&W 17×17 Mark C
- CE 14×14
- CE 16×16 System 80
- Westinghouse 14×14
- Westinghouse 14×14 OFA
- Westinghouse 15×15
- Westinghouse 17×17
- Westinghouse 17×17 OFA
- Ex/ANF 14×14 (CE)
- Ex/ANF 14×14 (WE)
- Ex/ANF 15×15 (WE)
- Ex/ANF 17×17 (WE)

BWR Fuel Assemblies

- Ex/ANF 7×7
- Ex/ANF 8×8 (63)*
- Ex/ANF 8×8 (62)*
- Ex/ANF 9×9 (79)*
- Ex/ANF 9×9 (74)*
- GE 7×7
- GE 8×8 (63)*
- GE 8×8 (62)*
- GE 8×8 (60)*
- GE 9×9 (79)*
- GE 9×9 (74)*

*Number of Fuel Rods Shown in Parentheses

For the BWR arrays, variation in zirconium alloy channel thickness is also evaluated. Section 6.4.4 augments the assembly characteristics definition by evaluating the reactivity impact of variations in fuel rod pitch, pellet diameter, clad thickness and guide tube thickness.

6.4.1.2 Most Reactive Fuel Assembly Determination

To determine the most reactive assembly within each type of fuel, a KENO-Va calculation is performed for the PWR and BWR fuel assemblies identified in Section 6.4.1.1. The calculated k_{eff} values for the various classes of fuel are given in Tables 6.4-1 through 6.4-4. The model for the PWR and the BWR fuel assembly types is discussed in the following paragraphs. On the basis of this analysis, the Westinghouse 17×17 OFA fuel assembly is determined to be the most reactive PWR fuel assembly. The Ex/ANF 9 × 9 fuel assembly with 79 fuel rods is determined to be the most reactive BWR fuel assembly.

6.4.1.2.1 Most Reactive PWR Assembly Analysis

The most reactive assembly analysis is based on an infinite array of basket cells, Figure 6.3-1. The assembly is in the PWR basket surrounded by the steel tube, four neutron absorber sheets, neutron absorber cover sheets, water to disk gap and steel, aluminum or water disk material. For the most reactive assembly analysis, the assembly is centered in the tube and the tube centered in the disk opening. Web thickness of 1.5, 1.0 and 0.875 in. is present in the PWR basket. Web thickness is assumed to have minimal impact on the most reactive assembly analysis. Therefore, the analysis is performed for a web thickness of 1.0 inch.

The basket cell model requires four basket slices at the active fuel elevation: one at the stainless steel disk elevation and thickness, one at the aluminum disk elevations and thickness, and two of the water space between disks. By stacking four of the slices (water, steel, water, and aluminum) on top of one another and periodically reflecting the disk stack, an axially infinite fuel-assembly-in-basket model is created. By imposing reflective boundary conditions on the sides of the basket cell model an infinite x-y array is also created.

With the exception of the axial (z) length, identical KENO-Va units are constructed for fuel pins, guide/instrument tubes, and neutron absorber sheets in the water and disk slice. Neutron absorber sheet KENO-Va units are required, one sheet running parallel to the x-plane, and one for the y plane for disk and water elevations. Axial dimensions for these units are made equal to either the water gap between disks or the disk heights (stainless steel disk and aluminum disk). In this analysis, all unit cells, except for the global unit, are centered on themselves, which implies symmetric upper and lower z elevation bounds.

The reactivity of an infinite array of basket unit cells containing infinitely tall, hybrid 14 × 14 fuel assemblies and a flooded fuel-cladding gap is $k_{eff} + 2\sigma = 0.96268$. This is less reactive than the same array of Westinghouse 17 × 17 OFA assemblies ($k_{eff} + 2\sigma = 0.9751$ from Table 6.4-1). Therefore, the design basis Westinghouse 17 × 17 OFA fuel criticality evaluation is bounding. The conservatism obtained by decreasing the pellet diameter below that of the reported Maine Yankee fuel pellet diameter is equivalent to a Δk_{eff} of 0.00247.

The most reactive lattice dimensions determined by the basket cell model are incorporated into the basket in cask model. Evaluating 24 hybrid 14 × 14 fuel assemblies with the most reactive pellet diameter for the accident condition produces a $k_{eff} + 2\sigma$ of 0.91014. This is less reactive than the accident condition for the transport cask loaded with the Westinghouse 17 × 17 OFA assemblies ($k_{eff} + 2\sigma$ of 0.9210). Therefore, the Westinghouse 17 × 17 OFA fuel criticality evaluation is bounding.

6.6.1.2.2 Variably Enriched Fuel Assemblies

Two batches of fuel used at Maine Yankee contain variably enriched fuel rods. Fuel rod enrichments of one batch are 4.21 wt % ^{235}U and 3.5 wt % ^{235}U. The maximum planar average enrichment of this batch is 3.99 wt %. In the other batch, the fuel rod enrichments are 4.0 wt % and 3.4 wt % ^{235}U. The maximum planar average enrichment of this batch is 3.92 wt %. Loading 24 variably enriched fuel assemblies having both a maximum fuel rod enrichment of 4.21 wt % and a maximum planar average enrichment of 3.99 wt % results in a $k_{eff} + 2\sigma$ of 0.89940. Using a planar fuel rod enrichment of 4.2 wt % results in a $k_{eff} + 2\sigma$ of 0.91014. Therefore, all of the fuel rods are conservatively modeled as if enriched to 4.2 wt % ^{235}U for the remaining Maine Yankee analyses.

6.6.1.2.3 Assemblies with Annular Axial End Blankets

One batch of variably enriched fuel also incorporates 2.6 wt % ^{235}U axial end blankets with annular fuel pellets. The top and bottom 5% of the active fuel length of each fuel rod in this batch contains annular fuel pellets having an inner diameter of 0.183 inches.

This geometry is discretely modeled as approximately 5% annular fuel, 90% solid fuel and then 5% annular fuel, with all fuel materials enriched to 4.2 wt % ^{235}U. The diameter of all pellets is initially modeled as the most reactive pellet diameter. The accident case model, which includes flooding of the fuel cladding annulus, is used in this evaluation. Axial periodic boundary conditions are placed on the model, retaining the conservatism of the infinite fuel length. Use of

a smaller pellet diameter is not considered to be conservative when evaluating the annular fuel pellets. The smaller pellet diameter is the most reactive diameter under the assumption that it is solid and not an annulus. Flooding the axial end blanket annulus provides additional moderator to the fuel lattice. Therefore, the diameter of the annular pellets is also modeled as the maximum pellet diameter of 0.380 inch. The 0.380-inch diameter is applied to the annular pellets, while the smaller diameter is applied to the solid pellets. The results of both evaluations are reported in Table 6.6.1-4.

The most reactive annular fuel model for the annular axial end blankets results in a slightly more reactive system than the hybrid fuel accident evaluation, the annular condition is less reactive than the evaluation including Westinghouse 17 × 17 OFA assemblies. Therefore, the Westinghouse 17 × 17 OFA fuel criticality evaluation is bounding.

6.6.1.2.4 Assemblies with Removed Fuel Rods

Some of the Maine Yankee fuel assemblies have had fuel rods removed from the 14 × 14 lattice or have had poison rods replaced by hollow zirconium alloy tubes. The exact number and location of removed rods and hollow tubes differs from one assembly to another. To determine a bounding reactivity for these assemblies, an analysis changing the location and the number of removed rods is performed. The removed rod analysis bounds that of the hollow tube analysis, since the zirconium alloy tubes displace moderator in the under moderated assembly lattice. For each case, all 24 assemblies are centered in the fuel tubes and have the same number and location of removed fuel rods. Various patterns of removed fuel rod locations are analyzed when the number of removed fuel rods is small enough to allow a different and possibly more reactive geometry. As the number of removed fuel rods increases, the number of possible highly reactive locations for these removed rods decreases. The fuel pellet diameter is modeled first at the most reactive diameter (0.3527 inches as determined in Section 6.6.1.2.1), and then at the maximum diameter of 0.380 inches.

The results of these analyses, which determine the most reactive number and geometry of removed rods for any Maine Yankee assembly, are presented in Tables 6.6.1-5 and 6.6.1-6. Table 6.6.1-5 contains the results based on a 0.3527-inch fuel pellet. All of the removed fuel rod cases using the smaller pellet diameter show cask reactivity levels lower than those of Westinghouse 17 × 17 OFA fuel. Table 6.6.1-6 contains the results of the evaluation using the maximum pellet diameter of 0.380 inch. Using the maximum pellet diameter provides for a more reactive system, since moderator is added (at the removed rod locations), to an assembly that contains more fuel. The most reactive removed fuel rod case occurs when 24 fuel rods are removed in the diamond shaped geometry shown in Figure 6.6.1-1, from the model containing the largest allowed pellet diameter.

This case represents the bounding number and geometry of removed fuel rods for the Maine Yankee fuel assemblies. It results in a more reactive system than either the Maine Yankee hybrid 14 × 14 fuel accident case or the Westinghouse 17 × 17 OFA accident case assuming unrestricted loading. However, as shown in Table 6.6.1-6, when the loading of any assembly with less than 176 fuel rods or filler rods is restricted to the four corner fuel tubes, the reactivity of the worse case drops well below that of the Westinghouse 17 × 17 OFA fuel assemblies. Therefore, loading of Maine Yankee fuel assemblies with removed fuel rods, or with hollow zirconium alloy tubes, is restricted to the four corner fuel tube positions of the basket. With this loading restriction, the Westinghouse 17 × 17 OFA criticality evaluation remains bounding.

6.6.1.2.5 Assemblies with Fuel Rods in the Guide Tubes

A few of the Maine Yankee intact assemblies may contain up to two intact fuel rods in some of the guide tubes (i.e., allowing for the potential storage of individual intact fuel rods in an intact fuel assembly). To evaluate loading of these assemblies into the canister, an analysis adding 1 and then 2 intact fuel rods into 1, 2, 3 and then 5 guide tubes is made. This approach considers a fuel assembly with up to 186 fuel rods. The results of the evaluation of these configurations are shown in Table 6.6.1-7. While higher in reactivity than the Maine Yankee hybrid base case, any fuel configuration with up to 2 fuel rods per guide tube is less reactive than the accident case for the Westinghouse 17 × 17 OFA fuel assemblies. Therefore, the Westinghouse 17 × 17 OFA fuel criticality evaluation is bounding.

Fuel rods may also be inserted in the guide tubes of fuel assemblies from which the fuel rods were removed (i.e., fuel rods removed from a fuel assembly and re-installed in the guide tubes of the same fuel assembly). These fuel rods may be intact or damaged. The maximum number of fuel rods in these assemblies, including fuel rods in the guide tubes remains 176. These configurations are restricted to loading in one of the two configurations of the Maine Yankee Fuel Can in a corner fuel position in the basket. As shown in Section 6.6.1.2.4 for the removed fuel rods, and Section 6.6.1.3 for the damaged fuel, the maximum reactivity of Maine Yankee assemblies containing 176 fuel rods in various configurations is bounded by the Westinghouse 17 × 17 OFA evaluation. These non-standard Maine Yankee assemblies are restricted to the corner fuel positions.

In addition to the fuel rods, some Maine Yankee assemblies may contain poison shim rods in guide tubes. These solid fill rods will serve as parasitic absorber and displace moderator and are, therefore, not included in the criticality model but are bounded by the evaluation performed.

6.6.1.2.6 Consolidated Fuel

The consolidated fuel is a 17 × 17 array of intact fuel rods with a pitch of 0.492 inches. Some of the locations in the array contain solid fill rods and some are empty. To determine the reactivity of the consolidated fuel lattice with empty fuel rod positions, an analysis changing the location and the number of empty positions is performed. This analysis considers 24 consolidated fuel lattices in the basket. All 24 consolidated fuel lattices are centered in the fuel tubes and have the same number and location of empty fuel rod positions.

As shown in Section 6.6.1.2.4, the removed fuel rod configuration with a 0.380-inch pellet diameter provides a more reactive system than a system using the optimum pellet diameter from Section 6.6.1.2.1. The larger pellet cases are more reactive, since moderator is added at the empty fuel rod positions to an assembly that contains more fuel. Therefore, the consolidated assembly empty rod position evaluation is performed with the 0.380-inch pellet diameter.

The results of this evaluation are shown in Table 6.6.1-8. Configurations having more than 73 empty positions result in a more reactive system than the Westinghouse 17 × 17 OFA model. The most reactive consolidated assembly case occurs with 113 empty rod positions in the geometry shown in Figure 6.6.1-2. However, when the loading of the consolidated fuel is restricted to the four corner fuel tubes, the reactivity of the system is lower than the accident condition of the basket loaded with Westinghouse 17 × 17 OFA assemblies. Therefore, loading of the consolidated fuel is restricted to the four corner fuel tube positions of the basket. With this loading restriction, the Westinghouse 17 × 17 OFA fuel criticality evaluation is bounding.

6.6.1.2.7 Conclusions

The criticality analyses for the Maine Yankee site specific fuel demonstrate that the UMS® basket loaded with these fuel assemblies results in a system that is less reactive than loading the basket with the Westinghouse 17 × 17 OFA fuel assemblies, provided that loading is restricted to the four corner fuel tube positions in the basket for:

- All 14 × 14 fuel assemblies with less than 176 fuel rods or solid filler rods
- All 14 × 14 fuel assemblies with hollow zirconium alloy tubes
- All 17 × 17 consolidated fuel lattices
- All 14 × 14 fuel assemblies with fuel rods in the guide tubes and a maximum of 176 fuel rods or solid rods and fuel rods.

The following Maine Yankee fuels are not restricted as to loading position within the basket:

- All 14 × 14 fuel assemblies with 176 fuel rods or solid filler rods at a maximum enrichment of 4.2 wt % ^{235}U.
- Variably enriched fuel with a maximum fuel rod enrichment of 4.21 wt % ^{235}U with a maximum planar average enrichment of 3.99 wt % ^{235}U.
- Fuel with solid stainless steel filler rods, solid zirconium alloy filler rods or solid poison shim rods in any location.
- Fuel with annular axial end blankets of up to 4.2 wt % ^{235}U.
- Fuel with a maximum of 2 intact fuel rods in each guide tube for a total of 186 fuel rods.

Assemblies defined as unrestricted may be loaded into the basket in any basket location and may be mixed in the same basket. While not analyzed in detail, CEAs and ICI thimble assemblies may be loaded into any intact assemblies. These components displace a significant amount of water in the fuel lattice while adding parasitic absorber, thereby reducing system reactivity.

Since the storage cask and the transfer cask loaded with the Westinghouse 17 × 17 OFA fuel assemblies is criticality safe, it is inherent that the same cask loaded with the less reactive fuel assemblies employed at Maine Yankee, using the fuel assembly loading restrictions presented above, is also criticality safe.

6.6.1.3 Maine Yankee Damaged Spent Fuel and Fuel Debris

Damaged fuel assemblies are placed in one of the two configurations of the Maine Yankee Fuel Can prior to loading in the basket (see Drawings 412-501 and 412-502). The Maine Yankee Fuel Can has screened openings in the baseplate and the lid to permit drainage, vacuum drying, and inerting of the can. This evaluation conservatively considers 100% of the fuel rods in the fuel can as damaged.

Fuel debris can be loaded in a rod or tube structure that is subsequently loaded into a Maine Yankee fuel can. The mass of fuel debris placed in the rod or tube is restricted to the mass equivalent of a fuel rod of an intact fuel assembly.

The Maine Yankee spent fuel inventory includes fuel assemblies with fuel rods inserted in the guide tubes of the assembly. If the integrity of the cladding of the fuel rods in the guide tubes cannot be ascertained, then those fuel rods are assumed to be damaged.

6.6.1.3.1 Damaged Fuel Rods

All of the spent fuel classified as damaged, and all of the spent fuel not in its original lattice, are stored in a Maine Yankee fuel can. This fuel is analyzed using a 100% fuel rod failure assumption. The screened fuel can is designed to preclude the release of pellets and gross particulate to the canister cavity. Evaluation of the canister with four (4) Maine Yankee fuel cans containing CE 14 × 14 fuel assemblies that have up to 176 damaged fuel rods, or consolidated fuel consisting of up to 289 fuel rods, considers 100% dispersal of the fuel from these rods within the fuel can. The Maine Yankee fuel can is restricted to loading in the four corner positions of the basket.

All loose fuel in each analysis is modeled as a homogeneous mixture of fuel and water of which the volume fractions of the fuel versus the water are varied from 0 - 100. By varying the fuel fraction up to 100%, this evaluation addresses fuel masses significantly larger than those available in a standard or consolidated fuel assembly. First, loose fuel from damaged fuel rods within a fuel assembly is evaluated between the remaining rods of the most reactive missing rod array. The results of this analysis, provided in Table 6.6.1-9, show a slight decrease in the reactivity of the system. This results from adding fuel to the already optimized H/U ratio of the bounding missing rod array. This effectively returns the system to an undermoderated state. Second, loose fuel is considered above and below the active fuel region of this most reactive missing rod array. This analysis is performed within a finite cask model. The results of this study, provided in Table 6.6.1-10, show that any possible mixture combination of fuel and water above and below the active fuel region, and hence, above and below the neutron absorber sheet coverage, will not significantly increase the reactivity of the system beyond that of the missing rod array. Loose fuel is also considered to replace all contents of the Maine Yankee fuel can in each four corner fuel tube location. The results of this study, provided in Table 6.6.1-11, show that any mixture of fuel and water within this cavity will not significantly increase the reactivity of the system beyond that of the missing rod array.

Damaged fuel within the fuel can may also result from a loss of integrity of a consolidated fuel assembly. As described in Section 6.6.1.2.6, the consolidated assembly missing rod study shows that a potentially higher reactivity heterogeneous configuration does not increase the overall reactivity of the system beyond that of loading 24 Westinghouse 17 × 17 OFA assemblies when this configuration is restricted to the four corner locations. The homogeneous mixture study of loose fuel and water replacing the contents of the Maine Yankee fuel can (in each of the four corner fuel tube locations) considers more fuel than is present in the 289 fuel rod consolidated

Table 6.6.1-1 Maine Yankee Standard Fuel Characteristics

Fuel Class[1]	Vendor	Array	Version	Number of Fuel Rods	Pitch (in.)	Rod Diameter (in.)	Clad ID (in.)	Clad Thickness (in.)	Pellet Diameter (in.)	GT[2] Thickness (in.)
1	CE	14x14	Std.	160[3]-176	0.570-0.590	0.438-0.442	0.3825-0.3895	0.024-0.028	0.376-0.380	0.036-0.040
1	Ex/ANF	14x14	CE	164[4]-176	0.580	0.438-0.442	0.3715-0.3795	0.0294-0.031	0.3695-0.3705	0.036-0.040
1	WE	14x14	CE	176	0.575-0.585	0.438-0.442	0.3825-0.3855	0.0262-0.028	0.376-0.377	0.034-0.038

1. All fuel rods are zirconium alloy clad.
2. Guide Tube thickness.
3. Up to 16 fuel rod positions may have solid filler rods or burnable poison rods.
4. Up to 12 fuel rod positions may have solid filler rods or burnable poison rods.

Table 6.6.1-2 Maine Yankee Most Reactive Fuel Dimensions

Parameter	Bounding Dimensional Value
Maximum Rod Enrichment[1]	4.2 wt % ^{235}U
Maximum Number of Fuel Rods[2]	176
Maximum Pitch (in.)	0.590
Maximum Active Length (in.)	N/A – Infinite Model
Minimum Clad OD (in.)	0.4375
Maximum Clad ID (in.)	0.3895
Minimum Clad Thickness (in.)	0.024
Maximum Pellet Diameter (in.)	0.3800 - Study
Minimum Guide Tube OD (in.)	1.108
Maximum Guide Tube ID (in.)	1.040
Minimum Guide Tube Thickness (in.)	0.034

1. Variably enriched fuel assemblies may have a maximum fuel rod enrichment of 4.21 wt % ^{235}U with a maximum planar average enrichment of 3.99 wt % ^{235}U.
2. Assemblies with less than 176 fuel rods or solid dummy rods are addressed after the determination of the most reactive dimensions.

Table 6.6.1-3 Maine Yankee Pellet Diameter Study

Diameter (inches)	k_{eff}	σ	$k_{eff} + 2\sigma$
0.3800	0.95585	0.00085	0.95755
0.3779	0.95784	0.00080	0.95944
0.3758	0.95714	0.00085	0.95884
0.3737	0.95863	0.00082	0.96027
0.3716	0.95862	0.00084	0.96030
0.3695	0.95855	0.00083	0.96021
0.3674	0.95863	0.00085	0.96033
0.3653	0.95982	0.00084	0.96150
0.3632	0.95854	0.00088	0.96030
0.3611	0.95966	0.00083	0.96132
0.3590	0.95990	0.00084	0.96158
0.3569	0.96082	0.00082	0.96246
0.3548	0.96053	0.00083	0.96219
0.3527	0.96104	0.00082	0.96268
0.3506	0.95964	0.00087	0.96138
0.3485	0.95993	0.00086	0.96165
0.3464	0.95916	0.00084	0.96084
0.3443	0.95847	0.00083	0.96013
0.3422	0.95876	0.00083	0.96042
0.3401	0.95865	0.00081	0.96027
0.3380	0.95734	0.00084	0.95902

Table 6.6.1-4 Maine Yankee Annular Fuel Results

Case Description	k_{eff}	σ	$k_{eff} + 2\sigma$
All pellets with a diameter of 0.3527 inches	0.90896	0.00083	0.91061
Annular pellet diameter changed to 0.3800 inches	0.91013	0.00087	0.91187

Chapter 7

Table of Contents

7.0 CONFINEMENT 7.1-1

7.1 Confinement Boundary 7.1-1
7.1.1 Confinement Vessel 7.1-1
7.1.1.1 Design Documents, Codes and Standards 7.1-3
7.1.1.2 Technical Requirements for the Canister 7.1-3
7.1.1.3 Release Rate 7.1-4
7.1.2 Confinement Penetrations 7.1-4
7.1.3 Seals and Welds 7.1-5
7.1.3.1 Fabrication 7.1-5
7.1.3.2 Welding Specifications 7.1-5
7.1.3.3 Testing, Inspection, and Examination 7.1-6
7.1.4 Closure 7.1-6

7.2 Requirements for Normal Conditions of Storage 7.2-1
7.2.1 Release of Radioactive Material 7.2-1
7.2.2 Pressurization of Confinement Vessel 7.2-1

7.3 Confinement Requirements for Hypothetical Accident Conditions 7.3-1

7.4 Confinement Evaluation for Site Specific Spent Fuel 7.4-1
7.4.1 Confinement Evaluation for Maine Yankee Site Specific Spent Fuel 7.4-1

7.5 References 7.5-1

List of Figures

Figure 7.1-1 Transportable Storage Canister Primary and Secondary Confinement Boundaries 7.1-7
Figure 7.1-2 Confinement Boundary Detail at Shield Lid Penetration 7.1-8

List of Tables

Table 7.1-1 Canister Confinement Boundary Welds 7.1-9

7.0 CONFINEMENT

The Universal Storage System Transportable Storage Canister provides confinement for its radioactive contents in long-term storage. The confinement boundary is closed by welding, creating a solid barrier to the release of contents in all of the design basis normal, off-normal and accident conditions. The welds are visually inspected and nondestructively examined to verify integrity. The containment boundary is leaktight as defined by ANSI N 14.5 [1].

The sealed canister contains an inert gas (helium). The confinement boundary retains the helium and also prevents the entry of outside air into the canister in long term storage. The exclusion of air precludes degradation of the fuel rod cladding, over time, due to cladding oxidation failures.

The Universal Storage System canister confinement system meets the requirements of 10 CFR 72.24 for protection of the public from release of radioactive material [2]. It also meets the requirements of 10 CFR 72.122 for protection of the spent fuel contents in long-term storage such that future handling of the contents would not pose an operational safety concern.

7.1 Confinement Boundary

The transportable storage canister provides confinement of the PWR or BWR contents in long-term storage. The welded canister forms the confinement vessel.

The primary confinement boundary of the canister consists of the canister shell, bottom plate, shield lid, the two port covers, and the welds that join these components. A secondary confinement boundary consists of the canister shell, the structural lid, and the welds that join the structural lid and canister shell. The confinement boundaries are shown in Figures 7.1-1 and 7.1-2. There are no bolted closures or mechanical seals in the primary or secondary confinement boundary. The confinement boundary welds are described in Table 7.1-1.

7.1.1 Confinement Vessel

The canister consists of three principal components: the canister shell, the shield lid, and the structural lid. The canister shell is a right circular cylinder constructed of 0.625-inch thick rolled Type 304L stainless steel plate. The edges of the rolled plate are joined using full penetration welds. It is closed at the bottom end by a 1.75-inch thick circular plate joined to the shell by a

full penetration weld. The inside and outside diameters of the canister are 65.81 inches and 67.06 inches, respectively. The canister has a length that is variable, depending on the canister class.

The canister is fabricated in accordance with the ASME Boiler and Pressure Vessel Code, Section III, Subsection NB [3], except for approved Code exceptions as listed in Table B3-1 of Appendix B of the CoC.

After loading, the canister is closed at the top by a shield lid and a structural lid. The shield lid is a 7-inch-thick Type 304 stainless steel plate. It is joined to the canister shell using a field installed bevel weld. The shield lid contains the drain and vent penetrations and provides gamma radiation shielding for the operators during the welding, draining, drying and inerting operations. After the shield lid is welded in place, the canister is pressure tested and leak tested to ensure leak tightness. Following draining, drying and inerting operations, the vent and drain penetrations are closed with Type 304 stainless steel port covers that are welded in place with bevel welds. The operating procedures, describing the handling steps to close the canister, are presented in Section 8.1.1. The pressure and leak test procedures are described in Section 9.1.

A secondary, or redundant, confinement boundary is formed at the top of the canister by the structural lid, which is placed over the shield lid. The structural lid is a 3-inch thick Type 304L stainless steel plate. The structural lid provides the attachment points for lifting the loaded canister. The structural lid is welded to the shell using a field installed bevel weld.

The weld specifications and the weld examination and acceptance criteria for the shield lid and stuctural lid welds are presented in Section 7.1.3.2 and Section 9.1.

The confinement boundaries are shown in Figures 7.1-1 and 7.1-2. As illustrated in Figure 7.1-2, the secondary confinement boundary includes the structural lid, the upper 3.2 inches of the canister shell and the joining weld. This boundary provides additional assurance of the leak tightness of the canister during its service life.

7.1.1.1 Design Documents, Codes and Standards

The canister is constructed in accordance with the license drawings presented in Section 1.8. The principal Codes and Standards that apply to the canister design, fabrication and assembly are described in Sections 7.1.1 and 7.1.3, and are shown on the licensing drawings.

7.1.1.2 Technical Requirements for the Canister

The canister confines up to 24 PWR, or 56 BWR, fuel assemblies. Over its 50-year design life, the canister precludes the release of radioactive contents and the entry of air that could potentially damage the cladding of the stored spent fuel. The design, fabrication and testing of the canister to the requirements of the ASME Code Section III, Subsection NB, with approved exceptions as listed in Table B3-1 of Appendix B of the CoC, ensures that the canister maintains confinement in all of the evaluated normal, off-normal, and accident conditions.

The canister has no exposed penetrations, no mechanical closures, and does not employ seals to maintain confinement. There is no requirement for continuous monitoring of the welded closures. The design of the canister allows the recovery of stored spent fuel should it become necessary.

The minimum helium purity level of 99.9% specified in Section 8.1.1 of the Operating Procedures maintains the quantity of oxidizing contaminants to less than one mole per canister for all loading conditions. Based on the calculations presented in Section 4.4.5, the free gas volume of the empty canister yields an inventory of less than 300 moles. Conservatively assuming that all of the impurities in 99.9% pure helium are oxidents, a maximum of 0.3 moles of oxidants could exist in the largest NAC-UMS® canister during storage. By limiting the amount of oxidants to less than one mole, the recommended limits for preventing cladding degradation found in the Pacific Northwest Laboratory, "Evaluation of Cover Gas Impurities and Their Effects on the Dry Storage of LWR Spent Fuel," PNL-6365 [6] are satisfied.

The design criteria that apply to the canister, as an element of the NAC-UMS® dry storage system, are presented in Table 1.2-1. The design basis parameters of the PWR and BWR spent fuel contents are presented in Section 1.3.

7.1.1.3 Release Rate

The primary confinement boundary is formed by joining the canister confinement boundary stainless steel components by welding. The canister shell longitudinal and girth welds are visually inspected, ultrasonically examined and pressure tested as described in Section 9.1 to confirm integrity. The shield lid welds are liquid penetrant examined following the root and the final weld passes. The shield lid to canister shell weld is pressure tested as described in Section 9.1.2. The structural lid to canister shell multi-pass weld is either: 1) progressively liquid penetrant examined; or 2) ultrasonically examined in conjunction with a liquid penetrant examination of the final weld surface.

To demonstrate leak tightness of the shield lid to canister shell weld, the leaktight criteria of 1×10^{-7} ref cm^3/sec, or 2×10^{-7} cm^3/sec (helium) at standard conditions, as defined in Section 2.1 of ANSI N14.5-1997, is applied. "Standard" conditions are defined as the leak rate at 298K (25°C) with a one atmosphere pressure differential in the test condition. Since helium at approximately 25°C (77°F) is injected into the canister, at the point of the procedure (Section 8.1.1) that the leak test is performed, the actual temperature of the helium is always equal to, or higher than, 25°C due to the decay heat of the contents. This results in a pressure within the canister that is higher than the 0 psig (helium) that is initially established. To ensure that the leak test is conservatively performed, the ANSI N14.5 defined leak rate of 2×10^{-7} cm^3/sec is used. The higher temperature and higher pressure differential that actually exist in the canister, are conservatively ignored. The sensitivity of the leak test is 1×10^{-7} cm^3/sec (helium). Using this criterion, there is no maximum allowable leak rate specified for the canister, and calculation of the radionuclide inventory is not required. The leak test is described in Section 8.1.1 and Section 9.1.3.

These steps provide reasonable assurance that the confinement boundary is leak tight and does not provide a path for the release of any of the content particulates, fission gases, volatiles, corrosion products or fill gases.

7.1.2 Confinement Penetrations

Two penetrations (with quick disconnect fittings) are provided in the canister shield lid for operator use. One penetration is used for draining residual water from the canister. It connects to a drain tube that extends to the bottom of the canister. The other penetration extends only to the underside of the shield lid. It is used to introduce air, or inert gas, into the top of the canister.

Once draining is completed, either penetration may be used for vacuum drying and backfilling with helium. After backfilling, both penetrations are closed with port covers that are welded to the shield lid. When the port covers are in place, the penetrations are not accessible. These port covers are enclosed and covered by the structural lid, which is also welded in place to form the secondary confinement boundary. The structural lid and the remainder of the canister have no penetrations.

7.1.3 Seals and Welds

This section describes the process used to properly assemble the confinement vessel (canister). Weld processes and inspection and acceptance criteria are described in Section 7.1.3.2 and Section 9.1.

No elastomer or metallic seals are used in the confinement boundary of the canister.

7.1.3.1 Fabrication

All cutting, machining, welding, and forming are performed in accordance with Section III, Article NB-4000 of the ASME Code, unless otherwise specified in the approved fabrication drawings and specifications. License drawings are provided in Section 1.8. Code exceptions are listed in Table B3-1 of Appendix B.

7.1.3.2 Welding Specifications

The canister body is assembled using longitudinal and, if required, circumferential shell welds and a circumferential weld to join the bottom plate to the shell.

Weld procedures and qualifications are in accordance with ASME Code Section IX [4]. The welds joining the canister shell are radiographed in accordance with ASME Code Section V, Article 2. The weld joining the bottom plate to the canister shell is ultrasonically examined in accordance with ASME Code Section V, Article 5 [5]. The acceptance criteria for these welds is as specified in ASME Code Section III, NB-5320 (radiographic) and NB-5330 (ultrasonic). The finished surfaces of these welds are liquid penetrant examined in accordance with ASME Code, Section III, NB-5350.

After loading, the canister is closed by the shield lid and the structural lid using field installed groove welds.

After the shield lid is welded in place, the canister is pneumatically (air/nitrogen/helium over water) pressure tested. Following draining, drying and inerting operations, the vent and drain ports are closed with port covers that are welded in place. The root and final surfaces of the shield lid to port cover welds are liquid penetrant examined in accordance with ASME Code Section V, Article 6 for welds requiring multiple passes. For port cover welds completed in a single pass, the final surface is liquid penetrant examined in accordance with the Section V, Article 6 criteria. Acceptance is in accordance with ASME Code Section III, NB-5350. The shield lid to canister shell weld is liquid penetrant examined at the root and final surfaces in accordance with ASME Code Section V, Article 6, with acceptance in accordance with ASME Code Section III, NB-5350, and is pressure and leak tested to ensure leaktightness. The operating procedures, describing the handling steps to seal the canister are presented in Section 8.1.1. The pressure and leak test procedures are described in Sections 8.1.1 and 9.1.3.

A redundant confinement boundary is provided at the top of the canister by the structural lid, which is placed over the shield lid. The structural lid is welded to the canister shell using a field-installed groove weld. The structural lid to canister shell weld is either: 1) ultrasonically examined (UT) in accordance with ASME Code Section V, Article 5, with the final weld surface liquid penetrant (PT) examined in accordance with ASME Code Section V, Article 6; or, 2) progressive liquid penetrant examined in accordance with ASME Code Section V, Article 6. Acceptance criteria are specified in ASME Code Section III, NB-5330 (UT) and NB-5350 (PT).

All welding procedures are written and qualified in accordance with Section IX of the ASME Code. Each welder and welding operator must be qualified in accordance with Section IX of the ASME Code.

7.1.3.3 Testing, Inspection, and Examination

The detailed inspection, nondestructive examination and test programs for the confinement vessel and components are described in Chapter 9.

7.1.4 Closure

The primary closure of the transportable storage canister consists of the welded shield lid and the two welded port covers. There are no bolted closures or mechanical seals in the primary closure. A secondary closure is provided at the top end of the canister by the structural lid. The structural lid, when welded to the canister shell, fully encloses the shield lid and the port covers.

Figure 7.1-1 Transportable Storage Canister Primary and Secondary Confinement Boundaries

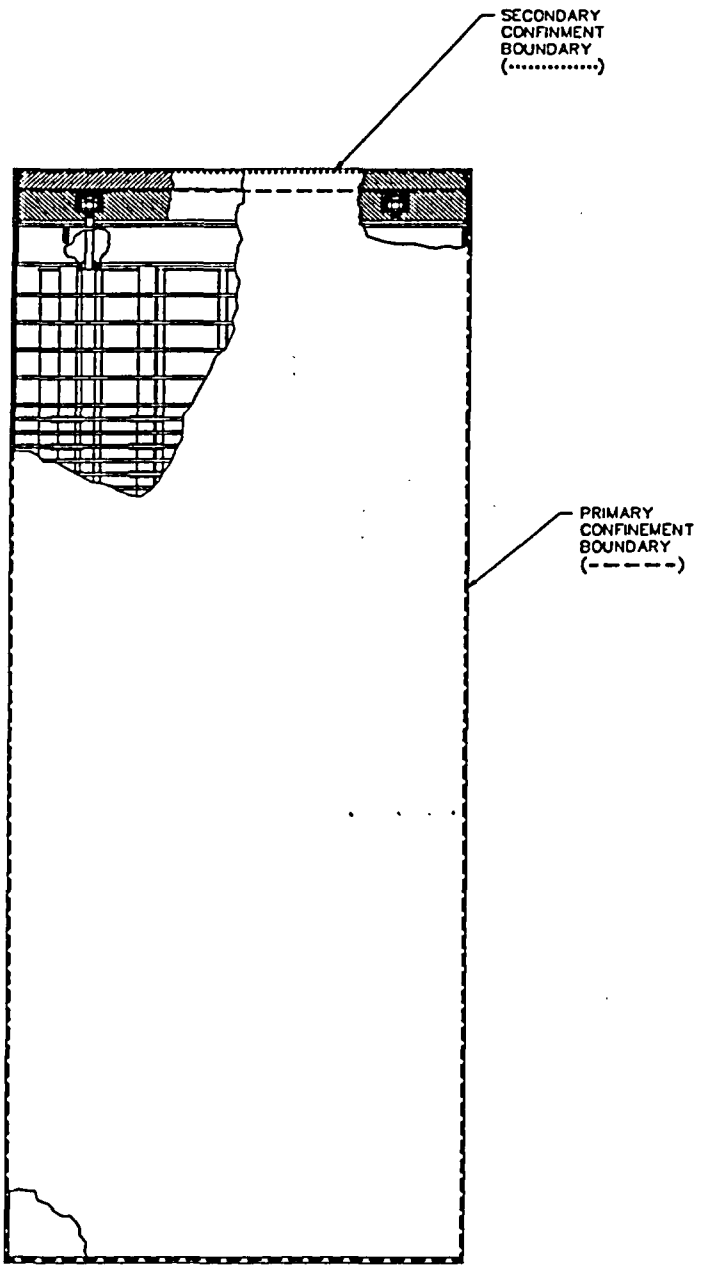

Figure 7.1-2 Confinement Boundary Detail at Shield Lid Penetration

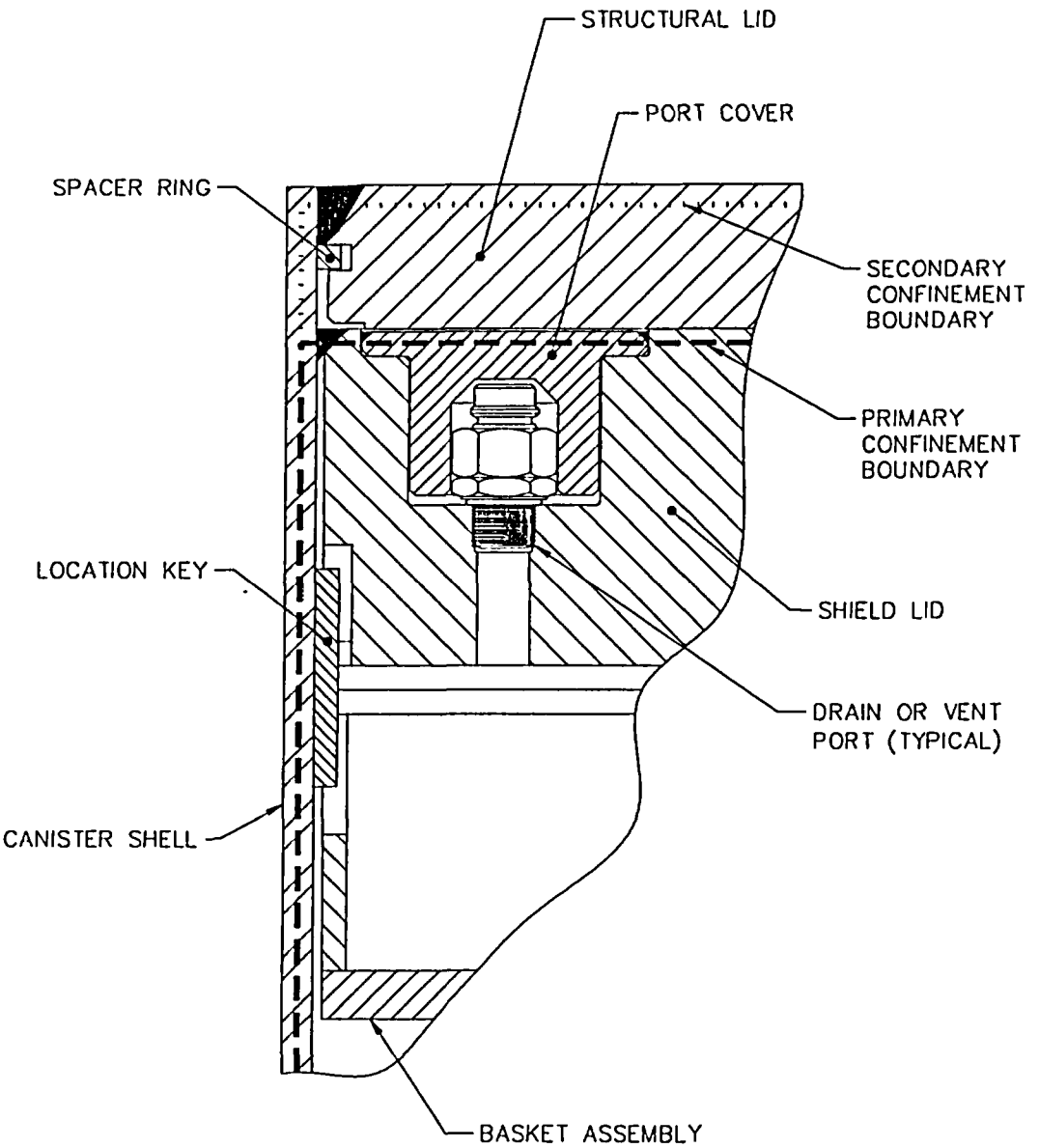

Table 7.1-1 Canister Confinement Boundary Welds

Confinement Boundary Welds		
Weld Location	**Weld Type**	**ASME Code Category (Section III, Subsection NB)**
Shell longitudinal	Full penetration groove (shop weld)	A
Shell circumferential (if used)	Full penetration groove (shop weld)	B
Bottom plate to shell	Full penetration groove (shop weld)	C
Shield lid to shell	Bevel (field weld)	C
Structural lid to shell	Bevel (field weld)	C
Vent and drain port covers to shield lid	Bevel (field weld)	C

THIS PAGE INTENTIONALLY LEFT BLANK

7.5 References

1. ANSI N14.5-1997, "American National Standard for Radioactive Materials - Leakage Tests on Packages for Shipment," American National Standards Institute, 1997.

2. Title 10 of the Code of Federal Regulations, Part 72 (10 CFR 72), "Licensing Requirements for the Storage of Spent Fuel in an Independent Spent Fuel Storage Installation," April 1996 Edition.

3. ASME Boiler and Pressure Vessel Code, Section III, Division I, "Rules for Construction of Nuclear Power Plant Components," 1995 Edition with 1995 Addenda.

4. ASME Boiler and Pressure Vessel Code, Section IX, "Qualification Standard for Welding and Brazing Procedures, Welders, Brazers, and Welding and Brazing Operators," 1995 Edition with 1995 Addenda.

5. ASME Boiler and Pressure Vessel Code, Section V, "Nondestructive Examination," 1995 Edition with 1995 Addenda.

6. PNL-6365, "Evaluation of Cover Gas Impurities and Their Effects on the Dry Storage of LWR Spent Fuel," Pacific Northwest Laboratory, Richland, Washington, November, 1987.

THIS PAGE INTENTIONALLY LEFT BLANK

Chapter 8

8.0 OPERATING PROCEDURES

This chapter provides general guidance for operating the Universal Storage System. Three operating conditions are addressed. The first is loading the transportable storage canister, installing it in the vertical concrete cask, and transferring it to the storage (Independent Spent Fuel Storage Installation (ISFSI)) pad. The second is the removal of the loaded canister from the concrete storage cask. The third is opening the canister to remove spent fuel in the unlikely event that this should be necessary.

The operating procedure for transferring a loaded canister from a storage cask to the Universal Transport Cask, is described in Section 7.2.2 of the UMS® Universal Transport Cask Safety Analysis Report. [1]

Users shall develop written and approved site-specific procedures that implement the operational sequences presented in the procedures in this chapter. These procedures present the general guidance for operations and the establishment of the process in which Technical Specification limits and requirements presented in Appendix A of Certificate of Compliance No. 72-1015 are met. The procedures provide the guidance and basis for the development and implementation of more detailed site-specific operating and test procedures required of the NAC-UMS® Storage System user. A departure from the specific way in which a given operational activity is performed may result from variations in specific site equipment or operational philosophy. Site-specific procedures shall also incorporate site-specific Technical Specifications, surveillance requirements, administrative controls, and other limits appropriate to the use of the NAC-UMS® Storage System to ensure that system/component design function is maintained. The user's site-specific procedures shall incorporate spent fuel assembly selection and verification requirements to ensure that the spent fuel assemblies loaded into the UMS® Storage System are as authorized by the Approved Contents and Design Features presented in Appendix B of the Amendment 3 Technical Specifications and the Certificate of Compliance.

Operation of the Universal Storage System requires the use of ancillary equipment items. An example listing of ancillary equipment normally required for system operation is shown in Table 8.1.1-1. Alternative ancillary equipment such as heavy-haul trailer and canister lifting devices may be utilized based on a site-specific evaluation. When a specific ancillary equipment item is referred to in the procedure, alternative ancillary equipment is allowable (i.e., vertical cask transporter, canister lifting systems, etc.). The system does not rely on the use of bolted closures, but bolts are used to secure retaining rings and lids. The hoist rings used for lifting the shield lid and canister have threaded fittings. Table 8.1.1-2 provides the torque values for installed bolts

and hoist rings. Supplemental shielding may be employed to reduce radiation exposure for certain of the tasks specified by these procedures. Use of supplemental shielding is at the discretion of the User.

The design of the Universal Storage System is such that the potential for spread of contamination during handling and future transport of the canister is minimized. The transportable storage canister is loaded in the spent fuel pool but is protected from gross contact with pool water by a jacket of clean or filtered pool water while it is in the transfer cask. Clean water is processed or filtered pool water, or any water external to the spent fuel pool that has a water chemistry that is compatible with use in the pool. Only the top of the open canister is exposed to contaminated pool water. The top of the canister is closed by the structural lid, which is not contaminated when it is installed. Consequently, the canister external surface is expected to be essentially free of contamination. There are no radioactive effluents from the canister or the concrete cask in routine operations or in the design basis accident events.

The guidance procedures described in this chapter allow the cask user to develop site-specific procedures that minimize the dose to the operators in accordance with As Low As Reasonably Achievable (ALARA) principles.

A training program is described in Section A 5.0 of Appendix A of the Amendment 3 Technical Specifications, that is intended to assist the User in complying with the training and dry run requirements of 10 CFR 72. This program addresses the controls and limits applicable to the UMS® Storage System. It also addresses the system operational features and requirements.

8.1 Procedures For Loading the Universal Storage System

The Universal Storage System consists of three principal components: the transportable storage canister (canister), the transfer cask, and the vertical concrete cask. The transfer cask is used to hold the canister during loading and while the canister is being closed and sealed. The transfer cask is also used to transfer the canister to the concrete cask and to load the canister into the transport cask. The principal handling operations involve closing and sealing the canister by welding, and placing the loaded canister in the vertical concrete cask. The typical vent and drain port locations are shown in Figure 8.1.1-1.

The transfer cask is provided in either the Standard or Advanced configuration that weigh approximately 121,500 pounds each, depending on Class. Canister handling, fuel loading and canister closing are operationally identical for either transfer cask configuration. Either transfer cask can accommodate an extension fixture to allow the use of the next longer length canister. The user shall verify that the appropriate extension is installed and torqued prior to initiating the canister-loading process.

This procedure assumes that the canister with an empty basket is installed in the transfer cask, that the transfer cask is positioned in the decontamination area or other suitable work station, and that the vertical concrete cask is positioned in the plant cask receiving area or other suitable staging area. The transfer cask extension must be installed on the transfer cask if its use is required. To facilitate movement of the transfer cask to the concrete cask, the staging area should be within the operational "footprint" of the cask handling crane. The concrete cask may be positioned on a heavy-haul transporter, or on the floor of the work area.

The User must ensure that the fuel assemblies selected for loading conform to the Approved Contents provisions of Section B2.0 of Appendix B of the Amendment 3 Technical Specifications. Fuel assembly loading may also be administratively controlled to ensure that fuel assemblies with specific characteristics are preferentially loaded in specified positions in the canister. Preferential loading requirements are described in Section B2.1.2 of Appendix B of the Amendment 3 Technical Specifications.

Certain steps of the procedures in this section may be completed out of sequence to allow for operational efficiency. Changing the order of these steps, within the intent of the procedures, has no effect on the safety of the canister loading process and does not violate any requirements stated in the Technical Specifications. These steps include the placement and installation of air pads and the sequence and use of an annulus fill system, including optional seals and/or foreign material exclusion devices.

THIS PAGE INTENTIONALLY LEFT BLANK

8.1.1 Loading and Closing the Transportable Storage Canister

1. Visually inspect the basket fuel tubes to ensure that they are unobstructed and free of debris. Ensure that the welding zones on the canister, shield, and structural lids, and the port covers are prepared for welding. Ensure transfer cask door lock bolts/lock pins are installed and secure.
2. Fill the canister with clean water until the water is about 4 inches from the top of the canister.

   Note: Do not fill the canister completely in order to avoid spilling water during the transfer to the spent fuel pool.

   Note: If fuel loading requires boron credit, the minimum boron concentration of the water in the canister must be at least 1,000 ppm (boron), in accordance with LCO 3.3.1.
3. Install the annulus fill system to transfer cask, including the clean water lines.
4. If it is not already attached, attach the transfer cask lifting yoke to the cask handling crane, and engage the transfer cask lifting trunnions.

   Note: The minimum temperature of the transfer cask (i.e., surrounding air temperature) must be verified to be higher than 0°F prior to lifting, in accordance with Section B3.4.1 (8) of Appendix B of the Amendment 3 Technical Specifications.
5. Raise the transfer cask and move it over the pool, following the prescribed travel path.
6. Lower the transfer cask to the pool surface and turn on the clean water line to fill the canister and the annulus between the transfer cask and canister.
7. Lower the transfer cask as the annulus fills with clean water until the trunnions are at the surface, and hold that position until the clean water overflows through the upper fill lines or annulus of the transfer cask. Then lower the transfer cask to the bottom of the pool cask loading area.

   Note: If an intermediate shelf is used to avoid wetting the cask handling crane hook, follow the plant procedure for use of the crane lift extension piece.
8. Disengage the transfer cask lifting yoke to provide clear access to the canister.
9. Load the previously designated fuel assemblies into the canister.

   Note: Contents must be in accordance with the Approved Contents provisions of Section B2.0 of Appendix B of the Amendment 3 Technical Specifications.

   Note: Contents shall be administratively controlled to ensure that fuel assemblies with certain characteristics are preferentially loaded in specified positions in the basket. Preferential loading requirements are presented in Section B2.1.2 of Appendix B of the Amendment 3 Technical Specifications.

10. Attach a three-legged sling to the shield lid using the swivel hoist rings. Torque hoist rings in accordance with Table 8.1-2. Attach the suction pump fitting to the vent port.
    Caution: Verify that the hoist rings are fully seated against the shield lid.
    Note: Ensure that the shield lid key slot aligns with the key welded to the canister shell.
11. Using the cask handling crane, or auxiliary hook, lower the shield lid until it rests in the top of the canister.
12. Raise the transfer cask until its top just clears the pool surface. Hold at that position, and using a suction pump, drain the pool water from above the shield lid. After the water is removed, continue to raise the cask. Note the time that the transfer cask is removed from the pool. Operations through Step 28 must be completed in accordance with the time limits presented in Table 8.1.1-3.

    Note: For the PWR configuration, in the event that the drain time limit is not met, either forced air or in-pool cooling, or monitoring the water temperature (see following note) is required. Forced air cooling is implemented by supplying 375 CFM air with a maximum temperature of 76°F to the 8 transfer cask lower inlets. Forced air or in-pool cooling of the canister shall be maintained for a minimum of 24 hours. After 24 hours, the cooling may be discontinued based on heat load as follows:

Time Periods for Discontinued Cooling after 24 Hours

Heat Load (kW)	For Forced Air Cooling (hrs)	For In-Pool Cooling (hrs)
$20 < L \leq 23$	4	15
$17.6 < L \leq 20$	7	18
$14 < L \leq 17.6$	11	22
$11 < L \leq 14$	14	24
$8 < L \leq 11$	20	29
$L \leq 8$	28	34

Note: Alternately, the temperature of the water in the canister may be used to establish the time for completion through Step 28 for the PWR configuration. Those operations must be completed within 2 hours of the time that the canister water reaches the temperatures shown in the following table. For this alternative, the water temperature must be determined every 2 hours beginning at the time shown in the following table after the time the transfer cask is removed from the pool.

Heat Load (kW)	Canister Water Temperature (°F)	Time to Start Temperature Measurement (hrs)
$20 < L \leq 23$	180	18
$17.6 < L \leq 20$	180	21
$14 < L \leq 17.6$	180	25
$11 < L \leq 14$	170	28
$8 < L \leq 11$	160	33
$L \leq 8$	150	38

Note: As an alternative, some sites may choose to perform welding operations for closure of the canister in a cask loading pit with water around the canister (below the trunnions) and in the annulus. This alternative provides additional shielding during the closure operation. If this alternative is implemented, the start time for compliance with Table 8.1.1-3 limits, as defined in Step 12, begins when the top of the canister is above the pool water surface (i.e., no longer fully submerged).

13. As the cask is raised, spray the transfer cask outer surface with clean water to wash off any gross contamination.
14. When the transfer cask is clear of the pool surface, but still over the pool, turn off the clean water flow to the annulus, remove hoses and allow the annulus water to drain to the pool. Move the transfer cask to the decontamination area or other suitable work station.
    Note: Access to the top of the transfer cask is required. A suitable work platform may need to be erected.
15. Verify that the shield lid is level and centered.
16. Attach the suction pump to the suction pump fitting on the vent port. Operate the suction pump to remove free water from the shield lid surface. Disconnect the suction pump and suction pump fitting. Remove any free standing water from the shield lid surface and from the vent and drain ports.
17. Decontaminate the top of the transfer cask and shield lid as required to allow welding and inspection activities.
    Note: Supplemental shielding may be used for activities around the shield lid.
18. Insert the drain tube assembly with a female quick-disconnect attached through the drain port of the shield lid into the basket drain tube sleeve. Remove the female quick-disconnect. Torque the drain tube assembly by hand until metal-to-metal contact is achieved; then torque to 135 ± 15 ft-lbs for Furon metal seals or 115 ± 5 ft-lbs for elastomer seals (EPDM or Viton). Install a quick-disconnect in the vent port.

19. Connect the suction pump to the drain port. Verify that the vent port is open. Remove approximately 70 gallons of water from the canister. Disconnect and remove the pump.
    Caution: Radiation level may increase as water is removed from the canister.
20. Install the automatic welding equipment, including the supplemental shield plate.
21. Attach the hydrogen gas detector to the vent port. Verify that the concentration of any detectable hydrogen gas in the free volume beneath the shield lid is less than 2.4%. Continue monitoring for hydrogen gas during completion of the shield lid root pass weld.
    Note: If, at any time, the hydrogen gas concentration exceeds 2.4%, stop welding operations and connect and operate the vacuum system, or use a gas purge through the vent port to remove the gases from beneath the shield lid. Reverify that the hydrogen gas concentration beneath the shield lid is less than 2.4%. Disconnect and remove the vacuum or purging system.
22. Operate the welding equipment to complete the root weld joining the shield lid to the canister shell following approved procedures. Remove the hydrogen detector from the vent tube. Leave the connector and vent tube installed to vent the canister.
23. Examine the root weld using liquid penetrant and record the results.
24. Complete welding of the shield lid to the canister shell.
25. Liquid penetrant examine the final weld surface and record the results.
26. Attach a regulated air, nitrogen or helium supply line to the vent port. Install a fitting on the drain port. Pressurize the canister to 35 psia and hold the pressure. There must be no loss of pressure for a minimum of 10 minutes.
27. Release the pressure.
    Note: As an option, an informational helium leak test may be conducted at this point using the following steps (the record leak test is performed at Step 49).
    27a. Evacuate and backfill the canister with helium having a minimum purity of 99.9% to a pressure of 18.0 psia.
    27b. Using a helium leak detector ("sniffer" detector) with a test sensitivity of 5×10^{-5} cm^3/sec (helium), survey the weld joining the shield lid and canister shell.
    27c. At the completion of the survey, vent the canister helium pressure to one atmosphere (0 psig).
28. Drain the canister.

    Drain the remaining water from the canister cavity. Draining of the canister may be performed by suction, by a blow-down gas pressure of 15-18 psig, or by a combination of suction and a blow-down gas pressure of 15-18 psig. After removal of the water from the canister, disconnect the equipment from the canister. Note the time that the last free water is removed from the canister cavity. If not already installed, install a quick-disconnect to the open vent port.

    Caution: Radiation levels at the top and sides of the transfer cask will rise as water is removed.

Note: The time duration from completion of draining the canister through completion of vacuum dryness testing and the introduction of helium backfill (Step 34) shall be monitored in accordance with LCO 3.1.1.

29. Attach the vacuum equipment to the vent and drain ports. Dry any free standing water in the vent and drain port recesses.
30. Operate the vacuum equipment until a vacuum of ≤3 mm of mercury exists in the canister.
31. Verify that no water remains in the canister by holding the vacuum of ≤3 mm of mercury for a minimum of 30 minutes. If water is present in the cavity, the pressure will rise as the water vaporizes. Continue the vacuum/hold cycle until the conditions of LCO 3.1.2 are met.
32. Backfill the canister cavity with helium having a minimum purity of 99.9% to a pressure of one atmosphere (0 psig).
33. Restart the vacuum equipment and operate until a vacuum of 3 mm of mercury exists in the canister.
34. Backfill the canister with helium having a minimum purity of 99.9% to a pressure of one atmosphere (0 psig).
    Note: Canister helium backfill pressure must conform to the requirements of LCO 3.1.3.
    Note: Monitor the time from this step (completion of helium backfill) until completion of canister transfer to the concrete cask in accordance with LCO 3.1.4.
35. Disconnect the vacuum and helium supply lines from the vent and drain ports. Dry any residual water that may be present in the vent and drain port cavities.
36. Install the vent and drain port covers.
37. Complete the root pass weld of the drain port cover to the shield lid.
    Note: If the drain port cover weld is completed in a single pass, the weld final surface is liquid penetrant inspected in accordance with Step 40.
38. Prepare the weld and perform a liquid penetrant examination of the root pass. Record the results.
39. Complete welding of the drain port cover to the shield lid.
40. Prepare the weld and perform a liquid penetrant examination of the drain port cover weld final pass. Record the results.
41. Complete the root pass weld of the vent port cover to the shield lid.
    Note: If the drain port cover weld is completed in a single pass, the weld final surface is liquid penetrant inspected in accordance with Step 44.
42. Prepare the weld and perform a liquid penetrant examination of the root pass. Record the results.
43. Complete welding of the vent port cover to the shield lid.

44. Prepare the weld and perform a liquid penetrant examination of the weld final surface. Record the results.
45. Remove the welding machine and any supplemental shielding used during shield lid closure activities.
46. Install the helium leak test fixture.
47. Attach the vacuum line and leak detector to the leak test fixture fitting.
48. Operate the vacuum system to establish a vacuum in the leak test fixture.
49. Operate the helium leak detector to verify that there is no indication of a helium leak exceeding 2×10^{-7} cm^3/second, at a minimum test sensitivity of 1×10^{-7} cm^3/second helium, in accordance with the requirements of LCO 3.1.5.
50. Release the vacuum and disconnect the vacuum and leak detector lines from the fixture.
51. Remove the leak test fixture.
52. Attach a three-legged sling to the structural lid using the swivel hoist rings.
    Caution: Ensure that the hoist rings are fully seated against the structural lid. Torque the hoist rings in accordance with Table 8.1.1-2. Verify that the spacer ring is in place on the structural lid.
    Note: Verify that the structural lid is stamped or otherwise marked to provide traceability of the canister contents.
53. Using the cask handling crane or the auxiliary hook, install the structural lid in the top of the canister. Verify that the structural lid is flush with, or protrudes slightly above, the canister shell. Verify that the gap in the spacer ring is not aligned with the shield lid alignment key. Remove the hoist rings.
54. Install the automatic welding equipment on the structural lid including the supplemental shield plate.
55. Operate the welding equipment to complete the root weld joining the structural lid to the canister shell.
56. Prepare the weld and perform a liquid penetrant examination of the weld root pass. Record the results.
57. Continue with the welding procedure, examining the weld at 3/8-inch intervals using liquid penetrant. Record the results of each intermediate and the final examination.
    Note: If ultrasonic testing of the weld is used, testing is performed after the weld is completed.
58. Remove the weld equipment and supplemental shielding.
59. Install the transfer cask retaining ring. Torque bolts to 155 ± 10 ft-lbs. (Table 8.1.1-2).
60. Decontaminate the external surface of the transfer cask to the limits established for the site.

Figure 8.1.1-1 Typical Vent and Drain Port Locations

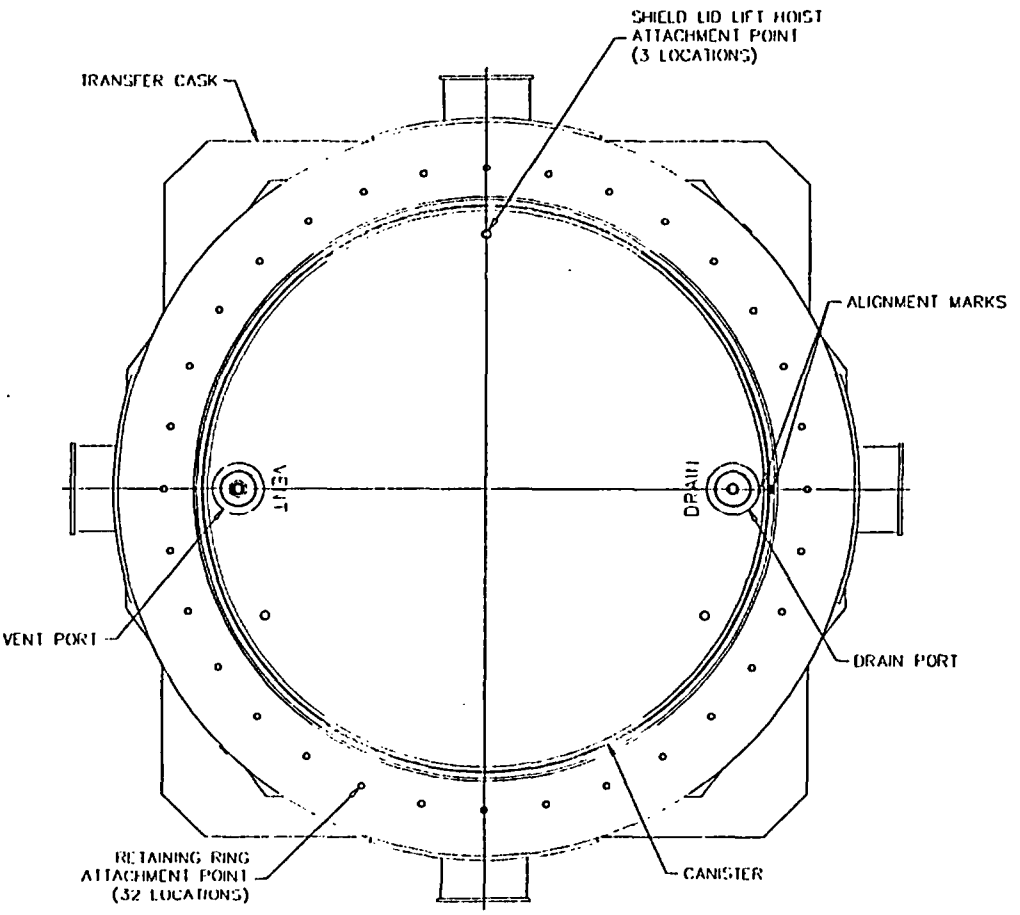

Table 8.1.1-1 List of Principal Ancillary Equipment

Item	Description
Transfer Cask Lifting Yoke	Required for lifting and moving the transfer cask.
Heavy-Haul Transporter (Optional)	Heavy-haul (double drop frame) trailer required for moving the loaded and empty vertical concrete cask to and from the ISFSI pad.
Mobile Lifting Frame (Optional)	A self-propelled or towed A-frame lifting device for the concrete cask. Mobile Lifting Frame is used to lift the cask and move it using two lifting lugs in the top of the concrete cask.
Helium Supply System	Supplies helium to the canister for helium backfill and purging operations.
Vacuum Drying System	Used for evacuating the canister. Used to remove residual water, air and initial helium backfill.
Automated Welding System	Used for welding the shield lid and structural lid to the canister shell.
Self-Priming Pump	Used to remove water from the canister.
Shield Lid Sling	A three-legged sling used for lifting the shield lid. It is also used to lift the concrete cask shield plug and lid.
Redundant Canister Lifting Sling System [1]	A set of 2 three-legged slings used for lifting the structural lid by itself, or for lifting the canister when the structural lid is welded to it. The slings are configured to provide for simultaneous loading during the canister lift.
Transfer Adapter	Used to align the transfer cask to the vertical concrete cask or the Universal Transport Cask. Provides the platform for the operation of the transfer cask shield doors.
Transfer Cask Extension	A carbon steel ring used to extend the height of the transfer cask when using the next longer size canister.
Hydraulic Unit	Operates the shield doors of the transfer cask.
Lift Pump Unit	Jacking system for raising and lowering the concrete cask.
Air Pad Rig Set	Air cushion system used for moving the concrete cask.
Supplemental Shielding Fixture	An optional carbon steel fixture inserted in the Vertical Concrete Cask air inlets to reduce radiation dose rates at the inlets.

[1] Note: Alternative canister lifting systems may be utilized based on a site-specific analysis and evaluation.

Table 8.1.1-2 Torque Values

Fastener	Torque Value (ft-lbs)	Torque Pattern
Transfer Adapter Bolts (Optional)	40 ± 5	None
Transfer Cask Retaining Ring	155 ±10	0°, 180°, 270° and 90° in two passes
Transfer Cask Extension	155 ±10	None
Vertical Concrete Cask Lid	40 ± 5	None
Lifting Hoist Rings – Canister Structural Lid Lid Only Loaded Canister	 Hand Tight 800 +80, -0	None
Canister Lid Plug Bolts Shield Lid Plug Bolts	Hand Tight Hand Tight	None None
Transfer Cask Door Lock Bolts	Hand Tight	None
Canister Drain Tube	135 ± 15 (Furon metal seals) or 115 ± 5 (elastomer seals, EPDM or Viton)	None

Table 8.1.1-3 Handling Time Limits Based on Decay Heat Load with Canister Full of Water

Total Heat Load (L) (kW)	PWR Time Limit (Hours)	BWR Time Limit (Hours)
$20.0 < L \leq 23.0$	20	17
$17.6 < L \leq 20.0$	23	17
$14.0 < L \leq 7.6$	27	17
$11.0 < L \leq 14.0$	30	17
$8.0 < L \leq 11.0$	35	17
$L \leq 8.0$	40	17

8.1.2 Loading the Vertical Concrete Cask

This section of the loading procedure assumes that the vertical concrete cask is located on the bed of a heavy-haul transporter, or on the floor of the work area, under a crane suitable for lifting the loaded transfer cask. The vertical concrete cask shield plug and lid are not in place, and the bottom pedestal plate cover is installed.

1. Using a suitable crane, place the transfer adapter on the top of the concrete cask.
2. If using the transfer adapter bolt hole pattern for alignment, align the adapter to the concrete cask. Bolt the adapter to the cask using four (4) socket head cap screws. (Note: Bolting of the transfer adapter to the cask is optional.)
3. Verify that the shield door connectors on the adapter plate are in the fully extended position.
   Note: Steps 4 through 6 may be performed in any order, as long as all items are completed.
4. If not already done, attach the transfer cask lifting yoke to the cask handling crane. Verify that the transfer cask retaining ring is installed.
5. Install six (6) swivel hoist rings in the structural lid of the canister and torque to the value specified in Table 8.1.1-2. Attach two (2) three-legged slings to the hoist rings.
   Caution: Ensure that the hoist rings are fully seated against the structural lid.
6. Stack the slings on the top of the canister so they are available for use in lowering the canister into the storage cask.
7. Engage the transfer cask trunnions with the transfer cask lifting yoke. Ensure that all lines are disconnected from the transfer cask.
   Note: The minimum temperature of the transfer cask (i.e., temperature of the surrounding air) must be verified to be higher than 0°F prior to lifting, in accordance with Section B 3.4.1(8) of Appendix B of the Amendment 3 Technical Specifications.
8. Raise the transfer cask and move it over the concrete cask. Lower the transfer cask, ensuring that the transfer cask shield door rails and connector tees align with the adapter plate rails and door connectors. Prior to final set down, remove transfer cask shield door lock bolts/lock pins (there is a minimum of one per door), or the door stop, as appropriate.
9. Ensure that the shield door connector tees are engaged with the adapter plate door connectors.
10 Disengage the transfer cask yoke from the transfer cask and from the cask handling crane hook.

11. Return the cask handling crane hook to the top of the transfer cask and engage the two (2) three-legged slings attached to the canister.
    Caution: The top connection of the three-legged slings must be at least 75 inches above the top of the canister.
12. Lift the canister slightly (about ½ inch) to take the canister weight off of the transfer cask shield doors.
    Note: A load cell may be used to determine when the canister is supported by the crane.
    Caution: Avoid raising the canister to the point that the canister top engages the transfer cask retaining ring, as this could result in lifting the transfer cask.
13. Using the hydraulic system, open the shield doors to access the concrete cask cavity.
14. Lower the canister into the concrete cask, using a slow crane speed as the canister nears the pedestal at the base of the concrete cask.
15. When the canister is properly seated, disconnect the slings from the canister at the crane hook, and close the transfer cask shield doors.
16. Retrieve the transfer cask lifting yoke and attach the yoke to the transfer cask.
17. Lift the transfer cask off of the vertical concrete cask and return it to the decontamination area or designated work station.
    Note: Ensure that the canister is located within the boundary of the support ring.
    Note: Perform removable contamination surveys on the canister exterior and/or transfer cask interior surfaces as required to confirm canister surface contamination is less than the limits specified in Technical Specification LCO 3.2.1.
18. Using the auxiliary crane, remove the adapter plate from the top of the concrete cask.
19. Remove the swivel hoist rings from the structural lid and replace them with threaded plugs.
20. Install three swivel hoist rings in the shield plug and torque in accordance with Table 8.1.1-2.
21. Using the auxiliary crane, retrieve the shield plug and install the shield plug in the top of the concrete cask. Remove swivel hoist rings.
22. Install seal tape around the diameter of the lid bolting pattern on the concrete cask flange.
23. Using the auxiliary crane, retrieve the concrete cask lid and install the lid in the top of the concrete cask. Secure the lid using six stainless steel bolts. Torque bolts in accordance with Table 8.1.1-2.
24. Ensure that there is no foreign material left at the top of the concrete cask. Install the tamper-indicating seal.
25. If used, install a supplemental shielding fixture in each of the four inlets. Note: The supplemental shielding fixtures may also be shop installed.

8.2 Removal of the Loaded Transportable Storage Canister from the Vertical Concrete Cask

Removal of the loaded canister from the vertical concrete cask is expected to occur at the time of shipment of the canistered fuel off site. Alternately, removal could be required in the unlikely event of an accident condition that rendered the concrete cask or canister unsuitable for continued long-term storage or for transport. This procedure assumes that the concrete cask is being returned to the reactor cask receiving area. However, the cask may be moved to another facility or area using the same operations. It identifies the general steps to return the loaded canister to the transfer cask and return the transfer cask to the decontamination station, or other designated work. area or facility. Since these steps are the reverse of those undertaken to place the canister in the concrete cask, as described in Section 8.1.2, they are only summarized here.

The concrete cask may be moved using the air pad set or a mobile lifting frame. This procedure assumes the use of the air pad set. If a lifting frame is used, the concrete cask is lifted using four lifting lugs in the top of the cask, and the air pad set and heavy haul transporter are not required. The mobile lifting frame may be self-powered or towed.

At the option of the user, the canister may be removed from the concrete cask and transferred to another concrete cask or to the Universal Transport Cask at the ISFSI site. This transfer is done using the transfer cask, which provides shielding for the canister contents during the transfer.

Certain steps of the procedures in this section may be completed out of sequence to allow for operational efficiency. Changing the order of these steps, within the intent of the procedures, has no effect on the safety of the canister loading process and does not violate any requirements stated in the Technical Specifications or the NAC-UMS® FSAR. This includes the placement and installation of the air pads.

1. Remove the screens and instrumentation.
2. Using the hydraulic jacking system and the air pad set, move the concrete cask from the ISFSI pad to the heavy-haul transporter. The bed of the transporter must be approximately level with the surface of the pad and sheet metal plates are placed across the gap between the pad and the transporter bed.
   Caution: Do not exceed a maximum lift height of 24 inches when raising the concrete cask.
3. Tow the transporter to the cask receiving area or other designated work area or facility.

4. Remove the concrete cask lid and shield plug. Install the hoist rings in the canister structural lid and torque to the value specified in Table 8.1.1-2. Verify that the hoist rings are fully seated against the structural lid and attach the lift slings. Install the transfer adapter on the top of the concrete cask.
5. Retrieve the transfer cask with the retaining ring installed, and position it on the transfer adapter. Attach the shield door hydraulic cylinders.

   Note: The surrounding air temperature for cask unloading operations shall be ≥ 0°F.
6. Open the shield doors. Attach the canister lift slings to the cask handling crane hook.

   Caution: The attachment point of the two three-legged slings must be at least 75 inches above the top of the canister.
7. Raise the canister into the transfer cask.

   Caution: Avoid raising the canister to the point that the canister top engages the transfer cask retaining ring, as this could result in lifting the transfer cask.
8. Close the shield doors. Lower the canister to rest on the shield doors. Disconnect the canister slings from the crane hook. Install and secure door lock bolts/lock pins.

   Note: Monitor the time from this step (closing of shield doors) until initiation of canister cooldown operations, or completion of transfer to a concrete cask or Universal Transport Cask in accordance with LCO 3.1.4.
9. Retrieve the transfer cask lifting yoke. Engage the transfer cask trunnions and move the transfer cask to the decontamination area or designated work station.

After the transfer cask containing the canister is in the decontamination area or other suitable work station, additional operations may be performed on the canister. It may be opened, transferred to another storage cask, or placed in the Universal Transport Cask.

8.3 Unloading the Transportable Storage Canister

This section describes the basic operations required to open the sealed canister if circumstances arise that dictate the opening of a previously loaded canister and the removal of the stored spent fuel. It is assumed that the canister is positioned in the transfer cask and that the transfer cask is in the decontamination station or other suitable work station in the facility. The principal mechanical operations are the cutting of the closure welds, filling the canister with water, cooling the fuel contents, and removing the spent fuel. Supplemental shielding is used as required. The canister cooling water temperature, flow rate and pressure must be limited in accordance with this procedure.

Certain steps of the procedures in this section may be completed out of sequence to allow for operational efficiency. Changing the order of these steps, within the intent of the procedures, has no effect on the safety of the canister loading process and does not violate any requirements stated in the Technical Specifications of the NAC-UMS® Storage FSAR. This includes the sequence and use of an annulus fill system including optional seals and/or foreign material exclusion devices.

1. Remove the transfer cask retaining ring.
2. Survey the top of the canister to establish the radiation level and contamination level at the structural lid.
3. Set up the weld cutting equipment to cut the structural lid weld (Abrasive grinding, hydrolaser, or similar cutting equipment).
4. Enclose the top of the transfer cask in a radioactive material retention tent, as required.
   Caution: Monitor for any out-gassing. Wear respiratory protection as required.
5. Operate the cutting equipment to cut the structural lid weld.
6. After proper monitoring, remove the retention tent. Remove the cutting equipment and attach a three-legged sling to the structural lid.
7. Using the auxiliary crane, lift the structural lid from the canister and out of the transfer cask.
8. Survey the top of the shield lid to determine radiation and contamination levels. Use supplemental shielding as necessary. Decontaminate the top of the shield lid, if necessary.
9. Reinstall the retention tent. Using an abrasive grinder or hydrolaser, or other appropriate cutting equipment excluding open flame, and wearing suitable respiratory protection if required, cut the welds joining the vent and drain port covers to the shield lid.
   Caution: The canister could be pressurized.

10. Remove the port covers. Monitor for any out-gassing and survey the radiation level at the quick-disconnect fittings.
11. Attach a nitrogen gas line to the drain port quick-disconnect and a discharge line from the vent port quick-disconnect to an off-gas handling system in accordance with the schematic shown in Figure 8.3-1. Set up the vent line with appropriate instruments so that the pressure in the discharge line and the temperature of the discharge gas are indicated. Continuously monitor the radiation level of the discharge line.

    Caution: The discharge gas temperature could initially be above 400°F. The discharge line and fittings may be very hot.

    Note: Any significant radiation level in the discharge gas indicates the presence of fission gas products. The temperature of the gas indicates the thermal conditions in the canister.
12. Start the flow of nitrogen through the line until there is no evidence of fission gas activity in the discharge line. Continue to monitor the gas discharge temperature. When there is no additional evidence of fission gas, stop the nitrogen flow and disconnect the drain and vent port line connections. The nitrogen gas flush must be maintained for at least 10 minutes.

    Note: See Figure 8.3-1 for Canister Reflood Piping and Control Schematic.
13. Ensure the vent port quick-disconnect has new Viton seals by replacing the seals in the existing quick-disconnect or installing a new quick-disconnect. Ensure the drain port quick-disconnect has new Viton seals by replacing the seals in the existing quick-disconnect, installing a new quick-disconnect or installing a new drain tube assembly. Ensure the quick-disconnect assemblies are torqued to the value specified in Table 8.1.1-2.
14. Perform canister refill and fuel cooldown operations. Attach a source of clean water with a minimum temperature of 70°F and a maximum supply pressure of 25 (+10, -0) psig to the drain port quick-disconnect. Attach a steam rated discharge line to the vent port quick-disconnect and route it to the spent fuel pool, an in-pool cooler, or an in-pool steam condensing unit. Slowly start the flow of clean or filtered pool water to establish a flow rate at 5 (+3, -0) gpm. Monitor the discharge line pressure gauge during canister flooding. Stop filling the canister if the canister vent line pressure exceeds 45 psig. Re-establish water flow when the canister pressure is below 35 psig. The discharge line will initially discharge hot gas, but after the canister fills, it will discharge hot water.

    Caution: Relatively cool water may flash to steam as it encounters hot surfaces within the canister.

    Caution: If there are grossly failed or ruptured fuel rods within the canister, very high levels of radiation could rapidly appear at the discharge line. The radiation level of the discharge gas or water should be continuously monitored.

    Caution: Reflooding requires the use of borated water in accordance with LCO 3.3.1 if borated water was required for the initial fuel loading.

Chapter 9

Table of Contents

9.0 ACCEPTANCE CRITERIA AND MAINTENANCE PROGRAM 9.1-1

9.1 Acceptance Criteria 9.1-1
9.1.1 Visual and Nondestructive Examination 9.1-1
9.1.1.1 Nondestructive Weld Examination 9.1-2
9.1.1.2 Construction Inspections 9.1-3
9.1.2 Structural and Pressure Test 9.1-4
9.1.2.1 Transfer Casks 9.1-4
9.1.2.2 Concrete Cask 9.1-5
9.1.2.3 Transportable Storage Canister 9.1-6
9.1.3 Leak Tests 9.1-6
9.1.4 Component Tests 9.1-7
9.1.4.1 Valves, Rupture Disks and Fluid Transport Devices 9.1-7
9.1.4.2 Gaskets 9.1-7
9.1.5 Shielding Tests 9.1-7
9.1.6 Neutron Absorber Tests 9.1-7
9.1.6.1 Neutron Absorber Material Sampling Plan 9.1-8
9.1.6.2 Neutron Absorber Wet Chemistry Testing 9.1-9
9.1.6.3 Acceptance Criteria 9.1-10
9.1.7 Thermal Tests 9.1-10
9.1.8 Cask Identification 9.1-10

9.2 Maintenance Program 9.2-1
9.2.1 UMS® Storage System Maintenance 9.2-1
9.2.2 Transfer Cask Maintenance 9.2-2
9.2.3 Required Surveillance of First Storage System Placed in Service 9.2-2

9.3 References 9.3-1

THIS PAGE INTENTIONALLY LEFT BLANK

9.0 ACCEPTANCE CRITERIA AND MAINTENANCE PROGRAM

This chapter specifies the acceptance criteria and the maintenance program for the Universal Storage System primary components - the Vertical Concrete Cask and Transportable Storage Canister. The system components, such as the concrete cask liner, base and air outlets, and the canister shell with the bottom plate, the shield and structural lids, and the basket that holds the spent fuel, are shop fabricated. The concrete cask consists of reinforced concrete placed around the steel liner and base that are integral to its performance. The liner forms the central cavity of the vertical concrete cask, which is mounted on the base. The liner/base interface forms air inlet passageways to the central cavity. The inlets allow cool ambient air to be drawn in and passed by the canister that contains the fuel. Air outlets at the top of the concrete cask allow the air heated by the canister wall and concrete cask liner to be discharged. The base of the concrete cask acts as a pedestal to support the canister during storage.

The concrete reinforcing steel (rebar) is bent in the shop and delivered to the concrete cask construction site. Concrete cask construction begins with the erection of the cask liner onto the steel base. Reinforcing steel is placed around the liner, followed by a temporary outer form which encircles the cask liner and reinforcing steel. The temporary form creates an annulus region between the liner and the form into which the concrete is placed.

As described in Section 8.1.3, the vertical concrete cask may be lifted by: (1) hydraulic jacks and moved by using air pads underneath the base; or (2) lifting lugs and moved by a mobile lifting frame.

9.1 Acceptance Criteria

The acceptance criteria specified below ensure that the concrete cask, including the liner, base, and canister are fabricated, assembled, inspected and tested in accordance with the requirements of this SAR and the license drawings presented in Section 1.8.

9.1.1 Visual and Nondestructive Examination

The acceptance test program establishes the visual inspections and nondestructive examinations to be performed to verify the acceptability of the shop fabricated and field constructed UMS® components.

All components shall be visually examined for conformance to the license drawings. Fit-up tests of canister components will be performed during canister acceptance to demonstrate that the canister, basket, port covers and lids can be properly assembled and the fuel tubes will accommodate the applicable design bases fuel assembly.

Materials of construction and subcomponents shall be receipt inspected for visual, dimensional and material certification acceptability to specification requirements.

Welding of the canister and basket assembly shall be performed in accordance with the requirements of ASME Code, Section IX [5]. Visual examinations of the canister and basket assembly welds shall be performed in accordance with the ASME Code, Section V, Article 9 [2]. The acceptance criteria for canister visual inspections are ASME Code, Section III, Subsection NB [1], Articles NB-4424 and NB-4427, and Section VIII, Division 1 [3], Articles UW-35 and UW-36. The acceptance criterion for basket assembly visual inspections is ASME Code, Section III, Subsection NG [6], Article NG-5360. Unacceptable canister welds shall be repaired per NB-4450 or NG-4450, as applicable, and reinspected in accordance with the original acceptance criteria.

Welding of the steel components of the concrete cask shall be performed in accordance with ANSI/ASME D1.1-96 [4] or ASME Code, Section VIII, Division 1, Part UW. Visual inspection of concrete cask steel components shall use the acceptance criteria of ANSI/ASME D1.1, Section 8.15.1, or ASME Code, Section VIII, Division 1, UW-35 and UW-36.

A final inspection of the critical dimensions of fabricated components shall be performed to confirm as-built dimensions. All components shall be inspected for appropriate cleanliness, including surfaces free from foreign material, oil, grease and solvents. Fabricated components shall be appropriately packaged for shipment.

9.1.1.1 Nondestructive Weld Examination

The canister shall be fabricated in accordance with the ASME Code, Section III, Subsection NB requirements, except for approved Code exceptions as listed in Table B3-1 of Appendix B of the Certificate of Compliance (CoC). The final surface of canister welds shall be examined by dye penetrant examination in accordance with ASME Code, Section V, Article 6, with acceptance per Section III, Subsection NB-5350. Canister longitudinal (and circumferential, if required) shell welds shall be examined by radiographic examination in accordance with the requirements of the

ASME Code, Section V, Article 2, with acceptance criteria per Section III, Subsection NB-5320. The canister shell to base plate weld shall be examined by ultrasonic examination in accordance with ASME Code, Section V, Article 5, with acceptance per Section III, Subsection NB-5330. The field installed shield lid and structural lid welds shall be inspected by ultrasonic or dye penetrant examination methods. The shield lid to shell and port cover to shield lid welds shall be dye penetrant examined at the root and final pass in accordance with ASME Code, Section V, Article 6, with acceptance per Section III, Subsection NB-5350. Should the root and final pass be one and the same (i.e., single pass weld), then only one dye penetrant examination is required. The structural lid to shell weld shall be examined by either ultrasonic or dye penetrant examination in accordance with ASME Code, Section V, Articles 5 or 6, respectively.

Ultrasonic examinations acceptance criteria shall be in accordance with ASME Code, Section III, Subsection NB-5330. The acceptance criteria for the dye penetrant examination of the structural lid root, every 3/8-inch layer and final surface shall be in accordance with ASME Code, Section III, Subsection NB-5350. The results of the structural lid dye penetrant examination final interpretation, as described in ASME Code, Section V, Article 6, T-676, including all relevant indications, shall be recorded by video, photographic or other means to provide retrievable records of weld integrity.

The basket shall be fabricated in accordance with the ASME Code, Section III, Subsection NG requirements, except for approved Code exceptions as listed in Table B3-1 of Appendix B of the CoC. The final surface of identified basket welds shall be examined by the dye penetrant examination in accordance with ASME Code, Section V, Article 6, with acceptance per Section III, Subsection NG-5350.

Personnel performing nondestructive examinations shall be qualified in accordance with SNT-TC-1A [11]. A written report shall be prepared for each weld examined and shall include, at a minimum, the identification of the part, material, name and level of examiner, NDE procedure used, and the findings or dispositions, if any.

9.1.1.2 Construction Inspections

Concrete mixing slump, air entrainment, strength and density are field verified using either the American Concrete Institute (ACI) or the American Society for Testing and Materials (ASTM) standard testing methods and acceptance criteria, as appropriate, to ensure adequacy. Reinforcing steel is installed per specification requirements based on ACI-318 [7].

9.1.2 Structural and Pressure Test

The transportable storage canister is pressure tested at the time of use. After loading of the canister basket with spent fuel, the shield lid is welded in place after approximately 70 gallons of water are removed from the canister. Removal of the water ensures that the water level in the canister is below the bottom of the shield lid during welding of the shield lid to the canister shell. Prior to removing the remaining spent fuel pool water from the canister, the canister is pressure tested at 35 psia. This pressure is held for a minimum 10 minutes. Any loss of pressure during the test period is unacceptable. The leak must be located and repaired. The pressure test procedure is described in Section 8.1.1.

If the canister is to be ASME Code N-stamped, the canister shall be hydrostatically tested in accordance with the requirements of ASME Code Subsection NB-6220 and Code Case N-595-2 following fabrication of the canister, insertion of the basket and welding of the lid support ring, and prior to fuel loading. The post-loading pressure test shall also be performed.

9.1.2.1 Transfer Casks

The transfer cask is provided in the Standard or Advanced configuration. The Standard transfer cask is restricted to handling the Standard weight canister. The Advanced transfer cask incorporates a reinforced trunnion design that allows it to handle either the standard weight, or a heavier weight, canister.

For any configuration, the transfer cask lifting trunnions and the bottom shield doors shall be tested in accordance with the requirements of ANSI N14.6, "Special Lifting Devices for Shipping Containers Weighing 10,000 pounds (4,500 kg) or More for Nuclear Materials" [8].

Standard Transfer Cask

The Standard transfer cask lifting trunnion load test shall consist of applying a vertical load of 630,000 pounds, which is greater than 300% of the maximum service load for the transfer cask and loaded canister with the shield lid and full of water (208,400 lbs). The bottom shield door and rail load test shall consist of applying a vertical load of 265,200 pounds, which is over 300% of the maximum service load (88,400 lbs). These maximum service loads are selected based on the heaviest configuration and, thus, bound all of the other configurations.

Advanced Transfer Cask

The Advanced transfer cask lifting trunnion load test shall consist of applying a vertical load of 690,000 pounds, which is greater than 300% of the maximum service load (225,000 pounds) for the transfer cask and loaded canister with the shield lid and full of water. The bottom shield door and rail load test shall consist of applying a vertical load of 300,000 pounds, which is over 300% of the maximum service load (98,000 lbs). These maximum service loads are based on the heaviest configuration and, thus, bound all the other configurations.

The load tests shall be held for a minimum of 10 minutes and shall be performed in accordance with approved, written procedures.

Following completion of the lifting trunnion load tests, all trunnion welds and all load bearing surfaces shall be visually inspected for permanent deformation, galling or cracking. Liquid penetrant examination (the magnetic particle method may be used on ferrous material) shall be performed on accessible trunnion and shield door rail load-bearing welds in accordance with ASME Code Section V, Articles 1, 6 and/or 7, with acceptance in accordance with ASME Code Section III, NF-5340 or NF-5350, as applicable. Similarly, following completion of the bottom shield door and rail load tests, all door rail welds and all load bearing surfaces shall be visually inspected for permanent deformation, galling or cracking.

Any evidence of permanent deformation, cracking or galling of the load bearing surfaces or unacceptable liquid penetrant examination results, shall be cause for evaluation, rejection, or rework of the affected component. Liquid penetrant or magnetic particle examinations of all load bearing welds shall be performed in accordance with ASME Code Section V, Articles 1, 6 and/or 7, with acceptance in accordance with ASME Code Section III, NF-5350 or NF-5340, as applicable.

9.1.2.2 Concrete Cask

The concrete cask, at the option of the user/licensee, may be provided with lifting lugs to allow for the vertical handling and movement of the concrete cask. The lifting lugs are provided as two sets of two lugs each. The concrete cask lifting lugs shall be load tested by applying a vertical load, which is greater than 150 percent of the maximum concrete cask weight plus a 10 percent dynamic load factor, where the concrete cask weight is determined, based on the class, from Table 3.2-1 or 3.2-2.

The test load shall be applied for a minimum of 10 minutes in accordance with approved, written procedures. Following completion of the load test, all load bearing surfaces of the lifting lugs shall be visually inspected for permanent deformation, galling, or cracking. Liquid penetrant or magnetic particle examinations of load bearing surfaces shall be performed in accordance with ASME Code, Section V, Articles 1, 6 and/or 7, with acceptance criteria in accordance with ASME Code, Section III, Subsection NF, NF-5350 or NF-5340, as applicable.

Any evidence of permanent deformation, cracking, or galling, or unacceptable liquid penetrant or magnetic particle examination results for the load bearing surfaces of the lifting anchors shall be cause for evaluation, rejection, or rework and retesting.

9.1.2.3 Transportable Storage Canister

The transportable storage canister shell may be hydrostatically or pneumatically pressure tested during fabrication in accordance with Section NB-6200 or NB-6300 of the ASME Code, respectively. Hydrostatic testing will be performed in accordance with NB-6221 using 1.25 times the design pressure of 15 psig. The test pressure shall be held a minimum of 10 minutes in accordance with NB-6223. Examination after the pressure test shall be in accordance with NB-6224. Alternately, a pneumatic pressure test may be performed in accordance with NB-6321 using 1.2 times the design pressure of 15 psig. The test pressure shall be held a minimum of 10 minutes in accordance with NB-6323. Examination after the pressure test shall be in accordance with NB-6224.

The canister shell shall consist of the completed Shell Weldment as shown on Drawing 790-582.

If the pressure test is not performed during fabrication, a pressure test must be performed upon closure of the canister with the shield lid as described in Section 8.1.1 of the operating procedures.

9.1.3 Leak Tests

The canister is leak tested at the time of use. After the pressure test described in Section 9.1.2, the canister is drained of residual water, vacuum dried and backfilled with helium. The canister is pressurized with helium to 0 psig. The shield lid to canister shell weld and the weld joining the port covers to the shield lid, are helium leak tested using a leak test fixture installed above the

shield lid. The leaktight criteria of 2.0×10^{-7} cm^3/sec (helium) of ANSI N14.5[9] is applied. The leak test is performed at a sensitivity of 1.0×10^{-7} cm^3/sec (helium). Any indication of a leak of 2.0×10^{-7} cm^3/sec (helium) is unacceptable and repair is required as appropriate.

9.1.4 Component Tests

The components of the Universal Storage System do not require any special tests in addition to the material receipt, dimensional, and form and fit tests described in this chapter.

9.1.4.1 Valves, Rupture Disks and Fluid Transport Devices

The transportable storage canister and the vertical concrete cask do not contain rupture disks or fluid transport devices. There are no valves that are part of the confinement boundary for transport or storage. Quick-disconnect valves are installed in the vent and drain ports of the shield lid. These valves are convenience items for the operator, as they provide a means of quickly connecting ancillary drain and vent lines to the canister. During storage and transport, these fittings are not accessible, as they are covered by port covers that are welded in place when the canister is closed. As presented for storage and transport, the canister has no accessible valves or fittings.

9.1.4.2 Gaskets

The transportable storage canister and the vertical concrete cask have no mechanical seals or gaskets that form an integral part of the system, and there are no mechanical seals or gaskets in the confinement boundary.

9.1.5 Shielding Tests

Based on the conservative design of the Universal Storage System for shielding criteria and the detailed construction requirements, no shielding tests of the vertical concrete cask are required.

9.1.6 Neutron Absorber Tests

A neutron absorbing material is used for criticality control in the PWR, BWR and oversize BWR fuel tubes. The placement and dimensions of the neutron absorber are as shown on the License

Drawings for these components. The neutron absorbing material is an aluminum matrix material formed from aluminum and boron-carbide, available from a number of qualified vendors. The mixing of the aluminum and boron-carbide powder forming the neutron absorber material is controlled to assure the required ^{10}B areal density, as specified on the component License Drawings. The constituents of the neutron absorber material shall be verified by chemical testing and/or spectroscopy and by physical property measurement to ensure the quality of the finished plate or sheet. The results of all neutron absorber material tests and inspections, including the results of wet chemistry coupon testing, are documented and become part of the quality records documentation package for the fuel tube and basket assembly.

Aluminum/boron carbide neutron absorbing material is available under trade names such as BORAL® and METAMIC®.

BORAL is manufactured by AAR Advanced Structures (AAR) of Livonia, Michigan, under a Quality Assurance/Quality Control program in conformance with the requirements of 10 CFR 50, Appendix B. AAR uses a computer-aided manufacturing process that consists of several steps. The initial step is the mixing of the aluminum and boron carbide powders that form the core of the finished material. The amount of each powder is a function of the desired ^{10}B areal density. The methods used to control the weight and blend the powders are patented and proprietary processes of AAR.

METAMIC is similarly manufactured by California Consolidated Technology, Inc. (CCT). CCT uses patented and proprietary processes to control the weight and blend of the powders used to meet the ^{10}B content specification and also uses a computer-aided manufacturing process to form the neutron absorber plates.

After manufacturing, test samples from each batch of neutron absorber sheets shall be tested using wet chemistry techniques to verify the presence and minimum weight percent of ^{10}B. The tests shall be performed in accordance with approved written procedures.

9.1.6.1 Neutron Absorber Material Sampling Plan

The neutron absorber sampling plan is selected to demonstrate a 95/95 statistical confidence level in the neutron absorber sheet material in compliance with the specification. In addition to the specified sampling plan, each sheet of material is visually and dimensionally inspected using

at least 6 measurements on each sheet. No rejected neutron absorber sheet is used. The sampling plan is supported by written and approved procedures.

The sampling plan requires that a coupon sample be taken from each of the first 100 sheets of absorber material. Thereafter, coupon samples are taken from 20 randomly selected sheets from each set of 100 sheets. This 1 in 5 sampling plan continues until there is a change in lot or batch of constituent materials of the sheet (i.e., boron carbide powder, aluminum powder, or aluminum extrusion) or a process change. The sheet samples are indelibly marked and recorded for identification. This identification is used to document neutron absorber test results, which become part of the quality record documentation package.

9.1.6.2 Neutron Absorber Wet Chemistry Testing

Wet chemistry testing of the test coupons obtained from the sampling plan is used to verify the ^{10}B content of the neutron absorber material. Wet chemistry testing is applied because it is considered to be the most accurate and practical direct measurement method for determining ^{10}B, boron and B_4C content of metal materials and is considered by the Electric Power Research Institute (EPRI) to be the method of choice for this determination.

An approved facility with chemical analysis capability, which could include the neutron absorber vendor's facility, shall be selected to perform the wet chemistry tests. Personnel performing the testing shall be trained and qualified in the process and in the test procedure.

Wet chemistry testing is performed by dissolving the aluminum in the matrix, including the powder and cladding, in a strong acid, leaving the B_4C material. A comparison of the amount of B_4C material remaining to the amount required to meet the ^{10}B content specification is made using a mass-balance calculation based on sample size.

A statistical conclusion about the neutron absorber sheet from which the sample was taken and that batch of neutron absorber sheets may then be drawn based on the test results and the controlled manufacturing processes.

The adequacy of the wet chemistry method is based on its use to qualify the standards employed in neutron blackness testing. The neutron absorption performance of a test material is validated based on its performance compared to a standard. The material properties of the standard are

demonstrated by wet chemistry testing. Consequently, the specified test regimen provides adequate assurance that the neutron absorber sheet thus qualified is acceptable.

9.1.6.3 Acceptance Criteria

The wet chemistry test results shall be considered acceptable if the ^{10}B areal density is determined to be equal to, or greater than, that specified on the fuel tube License Drawings. Failure of any coupon wet chemistry test shall result in 100% sampling, as described in the sampling plan, until compliance with the acceptance criteria is demonstrated.

9.1.7 Thermal Tests

No thermal acceptance testing of the Universal Storage System is required during construction. Thermal performance of the system is confirmed in accordance with the procedure specified in Section 9.2.3. In addition, temperature measurements are taken at the air outlets of the concrete cask(s) placed in service, in accordance with Appendix A of the Amendment 3 Technical Specifications, as verification of the thermal performance of the storage system.

9.1.8 Cask Identification

A stainless steel nameplate is permanently attached on the outer surface of the concrete cask as shown on Drawing No. 790-562.

The nameplate is installed at approximately eye level and includes the following information:

Vertical Concrete Cask

Model Number: (UMS-XXX)
Cask No.: (XXX)

Empty Weight: (Pounds [kilograms])

Note: Additional information may be added to the nameplate at the user's/NAC's discretion.

9.2 Maintenance Program

This section presents the maintenance requirements for the UMS® Universal Storage System and for the transfer cask.

9.2.1 UMS® Storage System Maintenance

The UMS® Universal Storage System is a passive system. No active components or systems are incorporated in the design. Consequently, only a minimal amount of maintenance is required over its lifetime.

The UMS® Universal Storage System has no valves, gaskets, rupture discs, seals, or accessible penetrations. Consequently, there is no maintenance associated with these types of features.

The routine surveillance requirements are described in Technical Specification LCO 3.1.6 in Appendix A. It is not necessary to inspect the concrete cask or canister during the storage period as long as the thermal performance is normal, based on daily temperature verification.

The ambient air temperature and air outlet temperature of each Vertical Concrete Cask must be recorded upon placement in service. Thereafter, the temperatures shall be recorded on a daily basis to verify the continuing thermal performance of the system.

In the event of a decline in thermal performance, the heat removal system must be restored to acceptable operation. The user should perform a visual inspection of air inlets and outlets for evidence of blockage and verify that the inlet and outlet screens are whole, secure and in place.

The user must also visually inspect the Vertical Concrete Cask within 4 hours of any off-normal, accident or natural phenomena event, such as an earthquake.

An annual inspection of the Vertical Concrete Cask exterior is required, to include:

- Visual inspection of concrete surfaces for chipping, spalling or other surface defects. Any defects larger than one inch in diameter (or width) and deeper than one inch shall be regrouted, according to the grout manufacturer's recommendations.
- Reapplication of corrosion-inhibiting (external) coatings on accessible corroded surfaces, including concrete cask lifting lugs, if present.

9.2.2 Transfer Cask Maintenance

The transfer cask trunnions and shield door assemblies shall be visually inspected for gross damage and proper function prior to each use. Annually, the lifting trunnions, shield doors and shield door rails shall be visually inspected for permanent deformation and cracking. Liquid penetrant examination (the magnetic particle method may be used on ferrous material) shall be performed on all accessible lifting trunnion and shield door rail load-bearing weld surfaces. The examination method shall be in accordance with Section V of the ASME Code. The acceptance criteria shall be in accordance with Section III, Subsection NF, Article NF-5350 or NF-5340 as appropriate to the examination method, as required by ANSI N14.6.

The annual examination may be omitted in periods of nonuse of the transfer cask, provided that the transfer cask examination is performed prior to the next use of the transfer cask.

Annually, the coating applied to the carbon steel surfaces of the transfer cask shall be inspected, and any chips, cracks or other defects in the coating shall be repaired.

9.2.3 Required Surveillance of First Storage System Placed in Service

For the first Universal Storage System placed in service with a heat load equal to or greater than 10 kW, the canister is loaded with spent fuel assemblies and the decay heat load calculated for that canister. The canister is then loaded into the vertical concrete cask, and the cask's thermal performance is evaluated by measuring the ambient and air outlet temperatures for normal air flow. The purpose of the surveillance is to measure the heat removal performance of the Universal Storage System and to establish baseline data. In accordance with 10 CFR 72.4, a letter report summarizing the results of the surveillance and evaluation will be submitted to the NRC within 30 days of placing the loaded cask on the ISFSI pad. The report will include a comparison of the calculated temperatures of the NAC-UMS® system heat load to the measured temperatures. A report is not required to be submitted for the NAC-UMS® systems that are subsequently loaded, provided that the performance of the first system placed in service with a heat load $\geq$ 10 kW, is demonstrated by the comparison of the calculated and measured temperatures.

NAC's "Report on the Thermal Performance of the NAC-UMS® System at the Palo Verde Nuclear Generating Station (PVNGS) Independent Spent Fuel Storage Installation" [10] dated May 30, 2003, was transmitted to the NRC by Arizona Public Service on June 4, 2003, in accordance with the requirements of NAC-UMS® Technical Specification A 5.3, "Special

Requirements for the First System Placed in Service," and in compliance with 10 CFR 72.4. The report concludes that the measured temperature data demonstrates that the thermal models and analysis results reported in the NAC-UMS® FSAR correctly represent the heat transfer characteristics of the storage system.

THIS PAGE INTENTIONALLY LEFT BLANK

9.3 References

1. ASME Boiler and Pressure Vessel Code, Section III, Division I, Subsection NB, "Class 1 Components," 1995 Edition with 1995 Addenda.

2. ASME Boiler and Pressure Vessel Code, Section V, "Nondestructive Examination," 1995 Edition with 1995 Addenda.

3. ASME Boiler and Pressure Vessel Code, Section VIII, Subsection B, Part UW, "Requirements for Pressure Vessels Fabricated by Welding," 1995 Edition with 1995 Addenda.

4. American Welding Society, Inc., "Structural Welding Code - Steel," AWS D1.1, 1996.

5. ASME Boiler and Pressure Vessel Code, Section IX, "Welding and Brazing Qualifications," 1995 Edition with 1995 Addenda.

6. ASME Boiler and Pressure Vessel Code, Section III, Division I, Subsection NG, "Core Support Structures," 1995 Edition with 1995 Addenda.

7. American Concrete Institute, "Building Code Requirements for Structural Concrete," ACI-318-95, October 1995.

8. American National Standards Institute, "Radioactive Materials - Special Lifting Devices for Shipping Containers Weighting 10,000 Pounds (4,500 kg) or More," ANSI N14.6-1993, 1993.

9. American National Standards Institute, "Leakage Tests on Packages for Shipment," ANSI N14.5-1997.

10. "Report on the Thermal Performance of the NAC-UMS® System at the Palo Verde Nuclear Generating Station (PVNGS) Independent Spent Fuel Storage Installation," NAC International, May 2003.

11. Recommended Practice No. SNT-TC-1A, "Personnel Qualification and Certification in Nondestructive Testing," The American Society for Nondestructive Testing, Inc., edition as invoked by the applicable ASME Code.

THIS PAGE INTENTIONALLY LEFT BLANK

Chapter 11

This DLF is applied to the end drop acceleration of 60g, which is the bounding load to potentially result in the buckling of the fuel rod. The product of 60g × DLF (= 14.6g) is well below the vertical acceleration corresponding to the first buckling mode shape, 37.9g as computed in this section. This indicates that the time duration of the impact of the fuel onto the fuel assembly base is of sufficiently short nature that buckling of the fuel rod cannot occur.

An effective cross-sectional property is used in the model to consider the properties of the fuel pellet and the fuel cladding. The modulus of elasticity (EX) for the fuel pellet has a nominal value of 26.0×10^6 psi [48]. To be conservative, only 50 percent of this value is used in the evaluation. The EX for the fuel pellet was, therefore, taken to be 13.0×10^6 psi. The value of EX (10.47×10^6 psi) was used for the irradiated zirconium alloy cladding (ISG-12). Reference information shows that there is no additional reduction of the ductility of the cladding due to extended burnup into the 45,000 – 50,000 MWD/MTU range [49].

The bounding dimensions and physical data (minimum clad thickness, maximum rod length and minimum number of support grids) for the Maine Yankee fuel rod used in the model are:

Outer diameter of cladding (inches)	0.434
Cladding thickness (inches)	0.023
Cladding density (lb/in^3)	0.237
Fuel pellet density (lb/in^3)	0.396

The cladding is reduced from its nominal value of 0.026 inches by the assumed 80 micron oxidation layer (0.003 inches) to 0.023 inches. Similarly, the fuel rod outer diameter is reduced from the nominal value of 0.44 inches to 0.434 inches.

The elevation of the grids, measured from the bottom of the fuel assembly are: 2.3, 33.0, 51.85, 70.7, 89.6, 108.4, 127.3 and 144.9 (inches).

The effective cross-sectional properties (EI_{eff}) for the beam are computed by adding the value of EI for the cladding and the pellet, where:

E = modulus of elasticity (lb/in^2)
I = cross-sectional moment of inertia (in^4)

The lowest frequency for the extentional mode shape was computed to be 219.0 Hz. The first mode shape corresponds to a frequency of 25.9 Hz. Using the expression for the DLF previously discussed, the DLF is computed to be 0.240 ($\beta = 8.44$).

120 Micron Oxide Layer Thickness Evaluation

The buckling calculation used the same model employed for the mode shape calculation. The load that would potentially buckle the fuel rod in the end drop is due to the deceleration of the rod. This loading was implemented by applying a 1g acceleration in the direction that would result in compressive loading of the fuel rod. The acceleration required to buckle the fuel rod is computed to be 37.3g.

Using the same fuel rod model, the acceleration required to buckle the fuel rods is found to be 37.3g, which is much higher than the calculated effective g-load (14.3g) due to the 60g end drop. Therefore, the fuel rods with a 120 micron cladding oxide layer do not buckle in the 60g end drop event.

11.2.15.1.6 Buckling Evaluation for High Burnup Fuel with Mechanical Damage

This section presents the buckling evaluation for high burnup fuel having an 80 micron cladding oxide layer thickness and with mechanical damage consisting of one or more missing support grids up to an unsupported fuel rod length of 60 inches.

End Drop Evaluation

The buckling load is maximized at the bottom of the fuel assembly. The bounding evaluation is the removal of the grid strap that maximizes the spacing at the lowest vertical elevation. The elevations of the grids in the model, measured from the bottom of the fuel assembly are: 2.3, 51.85, 70.7, 89.6, 108.4, 127.3 and 144.9 inches (Figure 11.2.15.1.6-1). The grid at the 33.0-inch elevation is removed, resulting in a grid spacing of approximately 50.0 inches. The grid located at 51.85 inches is conservatively assumed to be located at 62.3 inches, resulting in an unsupported rod length of 60.0 inches.

The case of the missing grid is evaluated using the methodology presented in Section 11.2.15.1.5 for the fuel assembly with the grids being present. The dimensions and physical data for the Maine Yankee fuel rod used in the model are:

Outer diameter of cladding (inches)	0.434
Cladding thickness (inches)	0.023
Cladding density (lb/in^3)	0.237
Fuel pellet density (lb/in^3)	0.396
Fuel pellet Modulus of Elasticity (psi)	13.0×10^6
Zirconium alloy cladding Modulus of Elasticity (psi)	10.47×10^6

The cladding is reduced from its nominal value of 0.026 inches by the assumed 80 micron oxidation layer thickness (0.003 inches) to 0.023 inches. Similarly, the fuel rod outer diameter is reduced from the nominal value of 0.44 inches to 0.434 inches. The fuel pellet modulus of elasticity is conservatively reduced 50%. The modulus of elasticity of the zirconium alloy is taken from ISG-12 [50].

With the grid missing, the frequency of the fundamental lateral mode shape is 7.8 Hz. The natural frequency of the fundamental extensional mode was determined to be 218.9 Hz. The DLF is computed to be 0.072, resulting in an effective acceleration of $0.072 \times 60 = 4.3$ g. Using the same method to compute the acceleration at which buckling occurs, the lowest buckling acceleration is 14.4 g, which is significantly greater than 4.3 g. Therefore, the fuel rod does not buckle during an

end drop. Figures 11.2.15.1.6-1 and 11.2.15.1.6-2 show the finite element model and buckling results and mode shape.

Side Drop Evaluation

The Maine Yankee fuel rod is evaluated for a 60 g side drop with a missing support grid in the fuel assembly. Using the same assumptions as for the end drop evaluation, the span between support grids is assumed to be 60.0 inches.

For this analysis, the dimensions and physical data used are:

Fuel rod OD	0.434 in. (80 micron oxidation layer)
Clad ID	0.388 in.
E_{clad}	10.47E6 psi
E_{fuel}	13.0E6 psi
Clad density	0.237 lb/in^3
Fuel density	0.396 lb/in^3
A_{clad}	0.030 in^2 (cross-sectional area)
A_{fuel}	0.118 in^2 (cross-sectional area)

The mass of the fuel rod per unit length is:

$$m = \frac{0.396(0.122) + 0.237(0.030)}{386.4} = 0.000143 \text{ lb-s}^2/\text{in}^2$$

For the fuel rod, the product of the Modulus of Elasticity (E) and Moment of Inertia (I), is:

$$EI_{clad} = 10.47E6 \frac{\pi(0.217^4 - 0.194^4)}{4} = 6{,}586 \text{ lb-in}^2$$

$$EI_{fuel} = 13.0E6 \frac{\pi(0.194^4)}{4} = 14{,}462 \text{ lb-in}^2$$

$$EI = 6{,}586 + 14{,}462 = 21{,}048 \text{ lb-in}^2$$

During a side drop, the maximum deflection of a fuel rod is based on the fuel rod spacing of the fuel assembly. The pitch (center-to-center spacing) of fuel rods is 0.58 inches [51]. The maximum pitch is across the diagonal of the fuel assembly. The maximum pitch is:

$$dp = \frac{0.58}{\sin 45} = 0.82 \text{ in.}$$

The maximum deflection of a fuel rod is at the top of the fuel assembly and the minimum deflection is at the bottom of the fuel assembly.

Assuming a 17 × 17 array (which envelops the Maine Yankee 14 × 14 array), the maximum fuel rod deflection is:

$$(17\text{-}1) \times (0.82\text{-}0.43) = 6.18 \text{ in.}$$

The deflection of a simply supported beam with a distributed load is given by the equation:

$$\Delta = \frac{5\omega l^4}{384EI} = \frac{5(g\omega)l^4}{384(EI_{total})} \qquad [52]$$

$$g = \frac{384\Delta(EI_{total})}{5\omega l^4}$$

The cladding bending stress is given by the equation:

$$S = \frac{Mc}{I} = \frac{\left(\left(g\omega l^2\right)/8\right)c}{I_{clad}}\left(\frac{EI_{clad}}{EI_{total}}\right)$$

Inserting the equation for 'g':

$$S = \frac{384\Delta cE_{clad}}{40 \times L^2}$$

where:

c = 0.217 inch distance from center of fuel rod to extreme outer fiber
L = 60 inches (the unsupported fuel rod length)
Δ = 6.18 inches (the maximum deflection)

The bending stress in the fuel rod is:

$$S = \frac{384 \times 6.18 \times 0.217 \times 10.47E6}{40(60)^2} = 37.4\,\text{ksi}$$

The maximum hoop stress due to the fuel rod internal pressure is determined to be 19.1 ksi (131.4 MPa per Tables 4.4.7-3 and 4.5.1.2-1). Therefore, the maximum axial stress is 9.6 ksi (one half of the hoop stress [53]).

The bearing stress between two fuel rods under a 60 g load is:

$$S_{brg} = 0.591\sqrt{\frac{\omega E}{K_D}} = 0.591\sqrt{\frac{(0.000143 \times 386.4) \times 60 \times 10.47E6}{0.22}} = 7.4\,\text{ksi} \quad [53]$$

where:

$$K_D = \frac{D_1 D_2}{D_1 + D_2} = \frac{0.434 \times 0.434}{0.434 + 0.434} = 0.22$$

The total stress is:

$$S = 37.4 + 9.6 + 7.4 = 54.4\,\text{ksi}$$

The ultimate strength allowable for irradiated zirconium alloy is 83.4 ksi (Figure 3-2 [54]). Therefore, the margin of safety for ultimate strength is:

$$MS = \frac{83.4}{54.4} - 1 = 0.53$$

The yield strength allowable for irradiated zirconium alloy is 78.3 ksi (Figure 3-2 [54]). Therefore, the margin of safety for yield strength is:

$$MS = \frac{78.3}{54.4} - 1 = 0.44$$

Chapter 12

C 3.1 NAC-UMS® SYSTEM Integrity

C 3.1.1 CANISTER Maximum Time in Vacuum Drying

BASES

BACKGROUND

A TRANSFER CASK with an empty CANISTER is placed into the spent fuel pool and loaded with fuel assemblies meeting the requirements of the Approved Contents limits. A shield lid is then placed on the CANISTER. The TRANSFER CASK and CANISTER are raised out of the spent fuel pool. The TRANSFER CASK and CANISTER are then moved to a preparation area, where dose rates are measured and the CANISTER shield lid is welded to the CANISTER shell and the lid weld is examined, pressure tested, and leak tested. The water is drained from the CANISTER, and CANISTER cavity vacuum drying is performed. The CANISTER cavity is then backfilled with helium. Additional dose rates are measured, and the CANISTER vent port and drain port covers and structural lid are installed and welded. Non-destructive examinations are performed on the welds. Contamination measurements are completed prior to moving the TRANSFER CASK and CANISTER in position to transfer the CANISTER to the CONCRETE CASK. After the CANISTER is transferred, the CONCRETE CASK is then moved to the ISFSI. Average CONCRETE CASK dose rates are measured at the ISFSI pad.

Limiting the elapsed time from the end of CANISTER draining operations through dryness verification testing and subsequent backfilling of the CANISTER with helium ensures that the short-term temperature limits established in the Safety Analyses Report for the spent fuel cladding and CANISTER materials are not exceeded and that the test duration of 30 days (720 hours) considered in PNL-4835 for Zircaloy clad fuel for storage in air is not exceeded.

APPLICABLE SAFETY ANALYSIS

Limiting the total time for loaded CANISTER vacuum drying operations ensures that the short-term temperature limits for the fuel cladding and CANISTER materials are not exceeded. If vacuum drying operations are not completed in the required time period, the CANISTER is backfilled with helium and cooled for a minimum of 24 hours of in-pool cooling or forced air cooling.

(continued)

APPLICABLE SAFETY ANALYSIS (continued)	Analyses reported in the Safety Analysis Report conclude that spent fuel cladding and CANISTER material short-term temperature limits will not be exceeded for total elapsed time in the vacuum drying operation and in the TRANSFER CASK with the CANISTER filled with helium. Since the rate of heat up is slower for lower total heat loads, the time required to reach component limits is longer than for the design basis heat load. Consequently, longer time limits are specified for heat loads below the design basis for the PWR and BWR fuel configurations as shown in LCO 3.1.1. As shown in the LCO, for total heat loads not specified, the time limit for the next higher specified heat load is conservatively applied. Analysis also shows that the fuel cladding and CANISTER component temperatures are well below the allowable temperatures for the time durations specified from the end of in-pool cooling, or end of forced air cooling, of the CANISTER through the completion of the vacuum drying and for the time specified in LCO 3.1.4 for the CANISTER in the TRANSFER CASK when backfilled with helium.
LCO	Limiting the length of time for vacuum drying operations for the CANISTER ensures that the spent fuel cladding and CANISTER material temperatures remain below the short-term temperature limits for the NAC-UMS® SYSTEM.
APPLICABILITY	The elapsed time restrictions for vacuum drying operations on a loaded CANISTER apply during LOADING OPERATIONS from the completion point of CANISTER draining operations through the completion point of the CANISTER dryness verification testing. The LCO is not applicable to TRANSPORT OPERATIONS or STORAGE OPERATIONS.
ACTIONS	A note has been added to the ACTIONS, which states that, for this LCO, separate Condition entry is allowed for each NAC-UMS® SYSTEM. This is acceptable, since the Required Actions for each Condition provide appropriate compensatory measures for each NAC-UMS® SYSTEM not meeting the LCO. Subsequent NAC-UMS® SYSTEMS that do not meet the LCO are governed by subsequent Condition entry and application of associated Required Actions.

(continued)

ACTIONS (continued)

A.1

If the LCO time limit is exceeded, the CANISTER will be backfilled with helium to a pressure of 0 psig (+1,-0).

AND

A.2.1.1

The TRANSFER CASK containing the loaded CANISTER shall be placed in the spent fuel pool having a maximum water temperature of 100°F. For in-pool cooling operations with the TRANSFER CASK and loaded CANISTER submerged, the annulus fill system is not required to be operating. If only the loaded CANISTER is submerged for in-pool cooling, the annulus fill system is required to be operating.

AND

A.2.1.2

The TRANSFER CASK and loaded CANISTER shall be maintained in the spent fuel pool with the water level above the top of the CANISTER, and a maximum water temperature of 100°F for a minimum of 24 hours prior to the restart of LOADING OPERATIONS.

OR

A.2.2.1

A cooling air flow of 375 CFM at a maximum temperature of 76°F shall be initiated. The airflow will be routed to the annulus fill/drain lines of the TRANSFER CASK and will flow through the annulus and cool the CANISTER.

AND

A.2.2.2

The cooling air flow shall be maintained for a minimum of 24 hours prior to restart of LOADING OPERATIONS.

(continued)

SURVEILLANCE REQUIREMENTS

SR 3.1.1.1

The elapsed time shall be monitored from completion of CANISTER draining through completion of the CANISTER vacuum dryness verification testing. Monitoring the elapsed time ensures that helium backfill and in-pool cooling operations can be initiated in a timely manner during LOADING OPERATIONS to prevent fuel cladding and CANISTER materials from exceeding short-term temperature limits.

SR 3.1.1.2

The elapsed time shall be monitored from the end of in-pool cooling or forced air cooling through completion of the CANISTER vacuum dryness verification testing. Monitoring the elapsed time ensures that helium backfill and in-pool cooling operations can be initiated in a timely manner during LOADING OPERATIONS to prevents fuel cladding and CANISTER materials from exceeding short-term temperature limits.

REFERENCES

1. FSAR Sections 4.4 and 8.1.

C 3.1 NAC-UMS® SYSTEM Integrity

C 3.1.2 CANISTER Vacuum Drying Pressure

BASES

BACKGROUND

A TRANSFER CASK with an empty CANISTER is placed into the spent fuel pool and loaded with fuel assemblies meeting the requirements of the Approved Contents Limits. A shield lid is then placed on the CANISTER. The TRANSFER CASK and CANISTER are raised out of the spent fuel pool. The TRANSFER CASK and CANISTER are then moved to a preparation area, where dose rates are measured and the CANISTER shield lid is welded to the CANISTER shell and the lid weld is examined, pressure tested, and leak tested. The water is drained from the CANISTER, and CANISTER cavity vacuum drying is performed. The CANISTER cavity is then backfilled with helium. Additional dose rates are measured, and the CANISTER vent port and drain port covers and structural lid are installed and welded. Non-destructive examinations are performed on the welds. Contamination measurements are completed prior to moving the TRANSFER CASK and CANISTER in position to transfer the CANISTER to the CONCRETE CASK. After the CANISTER is transferred, the CONCRETE CASK is then moved to the ISFSI. Average CONCRETE CASK dose rates are measured at the ISFSI pad.

CANISTER cavity vacuum drying is utilized to remove residual moisture from the CANISTER cavity after the water is drained from the CANISTER. Any water not drained from the CANISTER cavity evaporates due to the vacuum. This is aided by the temperature increase, due to the heat generation of the fuel.

APPLICABLE SAFETY ANALYSIS

The confinement of radioactivity (including fission product gases, fuel fines, volatiles, and crud) during the storage of design basis spent fuel in the CANISTER is ensured by the multiple confinement boundaries and systems. The barriers relied on are: the fuel pellet matrix, the metallic fuel cladding tubes where the fuel pellets are contained, and the CANISTER where the fuel assemblies are stored. Long-term integrity of the fuel and cladding depends on storage in an inert atmosphere. This is accomplished by removing water from the CANISTER and backfilling the cavity with helium. The thermal analysis assumes that the CANISTER cavity is dried and filled with helium.

(continued)

APPLICABLE SAFETY ANALYSIS (continued)	The heat-up of the CANISTER and contents will occur during CANISTER vacuum drying, but is controlled by LCO 3.1.1.
LCO	A vacuum pressure of 3 mm of mercury, as specified in this LCO, indicates that liquid water has evaporated and been removed from the CANISTER cavity. Removing water from the CANISTER cavity helps to ensure the long-term maintenance of fuel cladding integrity.
APPLICABILITY	Cavity vacuum drying is performed during LOADING OPERATIONS before the TRANSFER CASK holding the CANISTER is moved to transfer the CANISTER into the CONCRETE CASK. Therefore, the vacuum requirements do not apply after the CANISTER is backfilled with helium and leak tested prior to TRANSPORT OPERATIONS and STORAGE OPERATIONS.
ACTIONS	A note has been added to the ACTIONS, which states that, for this LCO, separate Condition entry is allowed for each CANISTER. This is acceptable, since the Required Actions for each Condition provide appropriate compensatory measures for each CANISTER not meeting the LCO. Subsequent CANISTERs that do not meet the LCO are governed by subsequent Condition entry and application of associated Required Actions. A.1 If the CANISTER cavity vacuum drying pressure limit cannot be met, actions must be taken to meet the LCO. Failure to successfully complete cavity vacuum drying could have many causes, such as failure of the vacuum drying system, inadequate draining, ice clogging of the drain lines, or leaking CANISTER welds. The Completion Time is sufficient to determine and correct most failure mechanisms. Excessive heat-up of the CANISTER and contents is precluded by LCO 3.1.1. B.1 If the CANISTER fuel cavity cannot be successfully vacuum dried, the fuel must be placed in a safe condition. Corrective actions may be taken after the fuel is placed in a safe condition to perform the A.1 action provided that the initial conditions for performing A.1 are met.

(continued)

ACTIONS (continued)	A.1 may be repeated as necessary prior to performing B.1. The time frame for completing B.1 can not be extended by re-performing A.1. The Completion Time is reasonable, based on the time required to reflood the CANISTER, perform fuel cooldown operations, cut the shield lid weld, move the TRANSFER CASK into the spent fuel pool, and remove the CANISTER shield lid in an orderly manner and without challenging personnel.
SURVEILLANCE REQUIREMENTS	SR 3.1.2.1 The long-term integrity of the stored fuel is dependent on storage in a dry, inert environment. Cavity dryness is demonstrated by evacuating the cavity to a very low absolute pressure and verifying that the pressure is held over a specified period of time. A low vacuum pressure is an indication that the cavity is dry. The surveillance must verify that the CANISTER cavity vacuum drying pressure is within the specified limit prior to backfilling the CANISTER with helium.
REFERENCES	1. FSAR Sections 4.4, 7.1 and 8.1.

C 3.1 NAC-UMS® SYSTEM Integrity

C 3.1.3 CANISTER Helium Backfill Pressure

BASES

BACKGROUND

A TRANSFER CASK with an empty CANISTER is placed into the spent fuel pool and loaded with fuel assemblies meeting the requirements of the Approved Contents limits. A shield lid is then placed on the CANISTER. The TRANSFER CASK and CANISTER are raised out of the spent fuel pool. The TRANSFER CASK and CANISTER are then moved to a preparation area, where dose rates are measured and the CANISTER shield lid is welded to the CANISTER shell and the lid weld is examined, pressure tested, and leak tested. The water is drained from the CANISTER, and CANISTER cavity vacuum drying is performed. The CANISTER cavity is then backfilled with helium. Additional dose rates are measured, and the CANISTER vent port and drain port covers and structural lid are installed and welded. Non-destructive examinations are performed on the welds. Contamination measurements are completed prior to moving TRANSFER CASK and CANISTER in position to transfer the CANISTER to the CONCRETE CASK. After the CANISTER is transferred, the CONCRETE CASK is then moved to the ISFSI. Average CONCRETE CASK dose rates are measured at the ISFSI pad.

Backfilling of the CANISTER cavity with helium promotes heat transfer from the spent fuel to the CANISTER structure and the inert atmosphere protects the fuel cladding. Providing a helium pressure equal to atmospheric pressure ensures that there will be no in-leakage of air over the life of the CANISTER, which might be harmful to the heat transfer features of the NAC-UMS® SYSTEM and harmful to the fuel.

APPLICABLE SAFETY ANALYSIS

The confinement of radioactivity (including fission product gases, fuel fines, volatiles, and crud) during the storage of spent fuel in the CANISTER is ensured by the multiple confinement boundaries and systems. The barriers relied on are: the fuel pellet matrix, the metallic fuel cladding tubes where the fuel pellets are contained, and the CANISTER where the fuel assemblies are stored. Long-term integrity of the fuel and cladding depends on the ability of the NAC-UMS® SYSTEM to remove heat from the CANISTER and reject it to the

(continued)

C 3.1 NAC-UMS® SYSTEM Integrity

C 3.1.4 CANISTER Maximum Time in the TRANSFER CASK

BASES

BACKGROUND

A TRANSFER CASK with an empty CANISTER is placed into the spent fuel pool and loaded with fuel assemblies meeting the requirements of the Approved Contents limits. A shield lid is then placed on the CANISTER. The TRANSFER CASK and CANISTER are raised out of the spent fuel pool. The TRANSFER CASK and CANISTER are then moved to a preparation area, where dose rates are measured and the CANISTER shield lid is welded to the CANISTER shell and the lid weld is examined, pressure tested, and leak tested. The water is drained from the CANISTER, and CANISTER cavity vacuum drying is performed. The CANISTER cavity is then backfilled with helium. Additional dose rates are measured, and the CANISTER vent port and drain port covers and structural lid are installed and welded. Non-destructive examinations are performed on the welds. Contamination measurements are completed prior to moving TRANSFER CASK and CANISTER in position to transfer the CANISTER to the CONCRETE CASK. After the CANISTER is transferred, the CONCRETE CASK is then moved to the ISFSI. Average CONCRETE CASK dose rates are measured at the ISFSI pad.

Backfilling the CANISTER cavity with helium promotes heat transfer from the fuel and the inert atmosphere protects the fuel cladding. The cumulative time a loaded, helium backfilled CANISTER may remain in the TRANSFER CASK is limited to 600 hours. This limit ensures that the test duration of 30 days (720 hours) considered in PNL-4835 for Zircaloy clad fuel for storage in air is not exceeded and ensures that the TRANSFER CASK is used as intended. The time limit is established to preclude long-term storage of a loaded CANISTER in the TRANSFER CASK.

Intermediate time limits are established for CANISTERS with heat loads above 20 kW (PWR) or 17 kW (BWR) if they are not in either forced air cooling or in-pool cooling. These intermediate limits assure that the short-term temperature limits established in the Safety Analysis Report for the spent fuel cladding and CANISTER materials are not exceeded. Placing the CANISTER in either forced air cooling or in-pool cooling for a minimum of 24 hours maintains temperatures within the short-term limits. For heat loads less than or equal to 20kW (PWR) or 17kW (BWR), neither forced air cooling nor in-pool cooling is required.

(continued)

APPLICABLE SAFETY ANALYSIS

Analyses reported in the Safety Analysis Report conclude that for heat loads greater than 20 kW (PWR) or greater than 17 kW (BWR), spent fuel cladding and CANISTER material short-term temperature limits will not be exceeded for the total elapsed times specified in LCO 3.1.4. As shown in the LCO, for total heat loads not specified, the time limit for the next higher specified heat load is conservatively applied. The thermal analysis shows that the fuel cladding and CANISTER component temperatures are below their allowable temperatures for the time durations specified, with the CANISTER in the TRANSFER CASK and backfilled with helium, after completion of 24 hours of in-pool cooling or forced air cooling. For lower heat loads, the steady state fuel cladding and component temperatures are below the allowable temperatures.

The basis for forced air cooling is an inlet maximum air temperature of 76°F which is the maximum normal ambient air temperature in the thermal analysis. The specified 375 CFM air flow rate exceeds the CONCRETE CASK natural convective cooling flow rate by a minimum of 10 percent. This comparative analysis conservatively excludes the higher flow velocity resulting from the smaller annulus between the TRANSFER CASK and CANISTER, which would result in improved heat transfer from the CANISTER.

From calculated temperatures reported in the Safety Analysis Report, it can be concluded that spent fuel cladding and CANISTER material short-term temperature limits will not be exceeded for a total elapsed time of greater than 20 hours for PWR fuel or 30 hours for BWR fuel for high heat loads, if the loaded CANISTER backfilled with helium is in the TRANSFER CASK. A 2 hour completion time is provided to establish in-pool or forced airflow cooling to ensure cooling of the CANISTER.

For heat loads of 20 kW or less (PWR), or 17 kW or less (BWR), and with the CANISTER backfilled with helium, the analysis shows that the fuel cladding and CANISTER components reach a steady-state temperature below the short-term allowable temperatures. Therefore, the time in the TRANSFER CASK is limited to 600 hours. For heat loads greater than 20 kW (PWR) or greater than 17 kW (BWR), and if the intermediate time is exceeded, the analysis shows that if in-pool cooling or forced air cooling at 375 CFM with air at 76°F is used, the temperatures of the fuel cladding and CANISTER components will not exceed short-term temperature limits.

(continued)

APPLICABLE SAFETY ANALYSIS (Continued)	This limit ensures that the test duration of 30 days (720 hours) considered in PNL-4835 for Zircaloy clad fuel for storage in air is not exceeded and ensures that the TRANSFER CASK is used as intended. Since the 600 hours is significantly less than the 720 hours considered in PNL-4835, operation in the TRANSFER CASK to this period is acceptable. Since the cooling provided by the forced air is equivalent to the passive cooling provided by the CONCRETE CASK and TRANSPORT CASK, relocation of a loaded and helium-filled CANISTER to a CONCRETE CASK or TRANSPORT CASK ensures that the fuel cladding and CANISTER component short-term temperature limits are not exceeded.
LCO	For PWR heat loads less than or equal to 20 kW, and BWR heat loads less than or equal to 17 kW, the thermal analysis shows that the presence of helium in the CANISTER is sufficient to maintain the fuel cladding and CANISTER component temperatures below the short-term temperature limits. Therefore, forced air cooling or in-pool cooling is not required for these heat load conditions. For higher heat loads of these fuels, as shown in the LCO, once forced air cooling or in-pool cooling is established, the amount of time the CANISTER resides in the TRANSFER CASK is not limited by the intermediate time limits, since the cooling provided by the forced air or water is equivalent to the passive cooling that is provided by the CONCRETE CASK or TRANSPORT CASK. If forced air flow or in-pool cooling is continuously maintained for a period of 24 hours, or longer, then the temperatures of the spent fuel cladding and CANISTER components are at, or below, the values calculated for the CONCRETE CASK normal conditions. Therefore, forced air cooling or in-pool cooling may be ended, allowing a new entry into Condition A of this LCO. This provides a new period in which continuation of LOADING OPERATIONS, TRANSFER OPERATIONS or UNLOADING OPERATIONS for high heat load PWR and BWR fuel may occur. Similarly, in LOADING OPERATIONS, TRANSFER OPERATIONS or UNLOADING OPERATIONS for heat loads up to the design basis, continuous forced air cooling or in-pool cooling maintains the fuel cladding and CANISTER component temperatures below the short-term temperature limits. Therefore, the CANISTER may remain in the TRANSFER CASK for up to 600 hours, where the time limit is based on the test duration of 30 days (720 hours) considered in PNL-4835 for Zircaloy clad fuel for storage in air rather than on temperature limits.

(continued)

CANISTER Maximum Time in the TRANSFER CASK
C 3.1.4

APPLICABILITY	For LOADING OPERATIONS, the elapsed time restrictions on the loaded CANISTER apply from the completion point of the CANISTER helium backfilling through completion of the transfer from the TRANSFER CASK to the CONCRETE CASK. For TRANSFER OPERATIONS, the elapsed time restrictions on the loaded CANISTER apply from the completion point of the closing of the TRANSFER CASK shield doors through completion of the unloading of the CANISTER from the TRANSFER CASK. For UNLOADING OPERATIONS, the elapsed time restrictions on the loaded CANISTER apply from the completion point of the closing of the TRANSFER CASK shield doors through initiation of CANISTER cooldown.
ACTIONS	A note has been added to the ACTIONS, which states that, for this LCO, separate Condition entry is allowed for each NAC-UMS® SYSTEM. This is acceptable, since the Required Actions for each Condition provide appropriate compensatory measures for each NAC-UMS® SYSTEM not meeting the LCO. Subsequent NAC-UMS® SYSTEMS that do not meet the LCO are governed by subsequent Condition entry and application of associated Required Actions. A note has been added to Condition A that reminds users that all time spent in Condition A is included in the 600-hour cumulative limit. If LCO 3.1.4 intermediate time is exceeded: A.1.1 The TRANSFER CASK containing the loaded CANISTER shall be placed in the spent fuel pool having a maximum water temperature of 100°F. For in-pool cooling operations with the TRANSFER CASK and loaded CANISTER submerged, the annulus fill system is not required to be operating. If only the loaded CANISTER is submerged for in-pool cooling, the annulus fill system is required to be operating. AND A.1.2 The TRANSFER CASK and loaded CANISTER shall be kept in the spent fuel pool for a minimum of 24 hours prior to restart of LOADING OPERATIONS, TRANSFER OPERATIONS and UNLOADING OPERATIONS.

(continued)

CANISTER Maximum Time in the TRANSFER CASK
C 3.1.4

ACTIONS (continued)	OR A.2.1 A cooling air flow of 375 CFM at a maximum temperature of 76° F shall be initiated. The airflow will be routed to the annulus fill/drain lines in the TRANSFER CASK and will flow through the annulus and cool the CANISTER. AND A.2.2 The cooling air flow shall be maintained for a minimum of 24 hours prior to restart of LOADING OPERATIONS, TRANSFER OPERATIONS and UNLOADING OPERATIONS. If the LCO 3.1.4. 600-hour cumulative time limit is exceeded: B.1 The CANISTER shall be placed in an operable CONCRETE CASK. OR B.2 The CANISTER shall be placed in an operable TRANSPORT CASK. OR B.3 The CANISTER shall be unloaded. The 5-day Completion Time for Required Actions B.1, B.2, and B.3 assures that the PNL-4835 30-day test duration used to establish the LCO limit will not be exceeded, taking into account the 600 hours allowed by the LCO.
SURVEILLANCE REQUIREMENTS	SR 3.1.4.1 The elapsed time from entry into the LCO conditions of Applicability until placement of the CANISTER in an operable CONCRETE CASK or TRANSPORT CASK, or until CANISTER cooldown is initiated for UNLOADING OPERATIONS shall be monitored. This SR ensures that the fuel cladding and CANISTER component temperature limits are not exceeded.
REFERENCES	1. FSAR Sections 4.4, 8.1 and 8.2.

C 3.1 NAC-UMS® SYSTEM Integrity

C 3.1.5 CANISTER Helium Leak Rate

BASES

BACKGROUND

A TRANSFER CASK with an empty CANISTER is placed into the spent fuel pool and loaded with fuel assemblies meeting the requirements of the Approved Contents limits. A shield lid is then placed on the CANISTER. The TRANSFER CASK and CANISTER are raised out of the spent fuel pool. The TRANSFER CASK and CANISTER are then moved to a preparation area, where dose rates are measured and the CANISTER shield lid is welded to the CANISTER shell and the lid weld is examined, pressure tested, and leak tested. The water is drained from the CANISTER, and CANISTER cavity vacuum drying is performed. The CANISTER cavity is then backfilled with helium. Additional dose rates are measured, and the CANISTER vent port and drain port covers and structural lid are installed and welded. Non-destructive examinations are performed on the welds. Contamination measurements are completed prior to moving TRANSFER CASK and CANISTER in position to transfer the CANISTER to the CONCRETE CASK. After the CANISTER is transferred, the CONCRETE CASK is then moved to the ISFSI. Average CONCRETE CASK dose rates are measured at the ISFSI pad.

Backfilling the CANISTER cavity with helium promotes heat transfer from the fuel to the CANISTER shell. The inert atmosphere protects the fuel cladding. Prior to transferring the CANISTER to the CONCRETE CASK, the CANISTER helium leak rate is verified to meet leaktight requirements to ensure that the fuel and helium backfill gas is confined.

APPLICABLE SAFETY ANALYSIS

The confinement of radioactivity (including fission product gases, fuel fines, volatiles, and crud) during the storage of spent fuel in the CANISTER is ensured by the multiple confinement boundaries and systems. The barriers relied on are: the fuel pellet matrix, the metallic fuel cladding tubes where the fuel pellets are contained, and the CANISTER where the fuel assemblies are stored. Long-term integrity of the fuel and cladding depends on maintaining an inert atmosphere, and maintaining the cladding temperatures below established long-term limits. This is accomplished by removing water from the CANISTER and backfilling the cavity with helium. The heat-up of the CANISTER and contents will continue following backfilling the cavity and leak testing the shield lid-to-shell weld, but is controlled by LCO 3.1.4.

(continued)

ACTIONS (continued)	B.2 (continued) This Required Action must be completed in 12 hours. The Completion Time reflects a conservative total time period without any cooling of 24 hours. The results of the thermal analysis of this accident show that the fuel cladding temperature does not reach its short-term temperature limit for more than 24 hours. It is also unlikely that an unforeseen event could cause complete blockage of all four air inlets and outlets immediately after the last successful Surveillance.
SURVEILLANCE REQUIREMENTS	SR 3.1.6.1 The long-term integrity of the stored fuel is dependent on the ability of the CONCRETE CASK to reject heat from the CANISTER to the environment. The temperature rise between ambient and the CONCRETE CASK air outlets shall be monitored to verify operability of the heat removal system. Blocked air inlets or outlets will reduce air flow and increase the temperature rise experienced by the air as it removes heat from the CANISTER. Based on the analyses, provided the air temperature rise is less than the limits stated in the SR, adequate air flow and, therefore, adequate heat transfer is occurring to provide assurance of long-term fuel cladding integrity. The reference ambient temperature used to perform this Surveillance shall be measured at the ISFSI facility. The Frequency of 24 hours is reasonable based on the time necessary for CONCRETE CASK components to heat up to unacceptable temperatures assuming design basis heat loads, and allowing for corrective actions to take place upon discovery of the blockage of the air inlets and outlets.
REFERENCES	1. FSAR Chapter 4 and Chapter 11, Section 11.2.13.

C 3.2 NAC-UMS® SYSTEM Radiation Protection

C 3.2.1 CANISTER Surface Contamination

BASES

BACKGROUND	A TRANSFER CASK containing an empty CANISTER is immersed in the spent fuel pool in order to load the spent fuel assemblies. The external surfaces of the CANISTER are maintained clean by the application of clean water to the annulus of the TRANSFER CASK. However, there is potential for the surface of the CANISTER to become contaminated with the radioactive material in the spent fuel pool water. Contamination exceeding LCO limits is removed prior to moving the CONCRETE CASK containing the CANISTER to the ISFSI in order to minimize the radioactive contamination to personnel or the environment. This allows the ISFSI to be entered without additional radiological controls to prevent the spread of contamination and reduces personnel dose due to the spread of loose contamination or airborne contamination. This is consistent with ALARA practices.
APPLICABLE SAFETY ANALYSIS	The radiation protection measures implemented at the ISFSI are based on the assumption that the exterior surfaces of the CANISTER are not significantly contaminated. Failure to decontaminate the surfaces of the CANISTER to below the LCO limits could lead to higher-than-projected occupational dose and potential site contamination.
LCO	Removable surface contamination on the exterior surfaces of the CANISTER is limited to 10,000 dpm/100 cm^2 from beta and gamma sources and 100 dpm/100 cm^2 from alpha sources. Only loose contamination is controlled, as fixed contamination will not result from the CANISTER loading process. Experience has shown that these limits are low enough to prevent the spread of contamination to clean areas and are significantly less than the levels that could cause significant personnel skin dose.

(continued)

LCO (continued)

LCO 3.2.1 requires removable contamination to be within the specified limits for the exterior surfaces of the CANISTER. Compliance with this LCO may be verified by direct and/or indirect methods. The location and number of CANISTER and TRANSFER CASK surface swipes used to determine compliance with this LCO are determined based on standard industry practice and the user's plant-specific contamination measurement program for objects of this size. The objective is to determine a removable contamination value representative of the entire CANISTER surface area, while implementing sound ALARA practices.

Swipes and measurements of removable surface contamination levels on the interior surfaces of the TRANSFER CASK may be performed to verify the CANISTER LCO limits following transfer of the CANISTER to the CONCRETE CASK. These measurements will provide indirect indications regarding the removable contamination on the exterior surfaces of the CANISTER.

APPLICABILITY

Verification that the exterior surface contamination of the CANISTER is less than the LCO limits is performed during LOADING OPERATIONS. This occurs before TRANSPORT OPERATIONS and STORAGE OPERATIONS. Measurement of the CANISTER surface contamination is unnecessary during UNLOADING OPERATIONS, as surface contamination would have been measured prior to moving the subject CANISTER to the ISFSI.

(continued)

ACTIONS	A note has been added to the ACTIONS, which states that, for this LCO, separate Condition entry is allowed for each CANISTER LOADING OPERATION. This is acceptable, since the Required Actions for each Condition provide appropriate compensatory measures for each CANISTER not meeting the LCO. Subsequent CANISTERs that do not meet the LCO are governed by subsequent Condition entry and application of associated Required Actions. A.1 If the removable surface contamination of the CANISTER that has been loaded with spent fuel is not within the LCO limits, action must be initiated to decontaminate the CANISTER and bring the removable surface contamination to within limits. The Completion Time of prior TRANSPORT OPERATIONS is appropriate, given that the time needed to complete the decontamination is indeterminate and surface contamination does not affect the safe storage of the spent fuel assemblies.
SURVEILLANCE REQUIREMENTS	SR 3.2.1.1 This SR verifies (either directly or indirectly) that the removable surface contamination on the exterior surfaces of the CANISTER is less than the limits in the LCO. The Surveillance is performed using smear surveys to detect removable surface contamination. The Frequency requires performing the verification prior to initiating TRANSPORT OPERATIONS in order to confirm that the CANISTER can be moved to the ISFSI without spreading loose contamination.
REFERENCES	1. FSAR Section 8.1. 2. NRC IE Circular 81-07.