ENCLOSURE 2

FRAMATOME CALCULATION

AREVA DOCUMENT 32-5054699-00, "PALISADES CRDM NOZZLE IDTB J-GROOVE WELD FLAW EVALUATION," DATED NOVEMBER 2004 (NON PROPRIETARY)

82 Pages Follow

AREVA

CALCULATION SUMMARY SHEET (CSS)

Document Identifier 32 - 5054699 - 00

Title PALISADES CRDM NOZZLE IDTB J-GROOVE WELD FLAW EVALUATION - NP

PREPARED BY:		REVIEWED BY:	
		METHOD: ☒ DETAILED CHECK ☐ INDEPENDENT CALCULATION	
NAME D.E. KILLIAN		NAME B.R. GRAMBAU	
SIGNATURE		SIGNATURE	
TITLE ADVISORY ENGR.	DATE 11/29/04	TITLE SUPV. ENGR.	DATE 11/29/04
COST CENTER 41629	REF. PAGE(S) 48	TM STATEMENT: REVIEWER INDEPENDENCE	ADM

PURPOSE AND SUMMARY OF RESULTS:

This is a non-proprietary version of AREVA/FANP Document Number 32-5044161-02.

The purpose of the present analysis is to determine from a fracture mechanics viewpoint the suitability of leaving degraded J-groove weld and butter material in the Palisades reactor vessel head following the repair of a CRDM nozzle by the ID temper bead weld procedure. It is postulated that a small flaw in the head would combine with a large stress corrosion crack in the weld and butter to form a radial corner flaw that would propagate into the low alloy steel head by fatigue crack growth under cyclic loading conditions.

Based on an evaluation of fatigue crack growth into the low alloy steel head using ASME Section XI flaw acceptance standards for preventing non-ductile failure, a postulated radial crack in the [ ] J-groove weld and butter would be acceptable for 27 years of operation.

* This document consists of pages 1, 1a, 1b, and 2 through 80.

THE FOLLOWING COMPUTER CODES HAVE BEEN USED IN THIS DOCUMENT:		THE DOCUMENT CONTAINS ASSUMPTIONS THAT MUST BE VERIFIED PRIOR TO USE ON SAFETY-RELATED WORK
CODE/VERSION/REV	CODE/VERSION/REV	
		☐ YES ☒ NO

AREVA

DESIGN VERIFICATION CHECKLIST

Document Identifier 32 – 5054699 - 00

Title PALISADES CRDM NOZZLE IDTB J-GROOVE WELD FLAW EVALUATION - NP

1.	Were the inputs correctly selected and incorporated into design or analysis?	☒ Y	☐ N	☐ N/A
2.	Are assumptions necessary to perform the design or analysis activity adequately described and reasonable? Where necessary, are the assumptions identified for subsequent re-verifications when the detailed design activities are completed?	☐ Y	☐ N	☒ N/A
3.	Are the appropriate quality and quality assurance requirements specified? Or, for documents prepared per FANP procedures, have the procedural requirements been met?	☒ Y	☐ N	☐ N/A
4.	If the design or analysis cites or is required to cite requirements or criteria based upon applicable codes, standards, specific regulatory requirements, including issue and addenda, are these properly identified, and are the requirements/criteria for design or analysis met?	☒ Y	☐ N	☐ N/A
5.	Have applicable construction and operating experience been considered?	☐ Y	☐ N	☒ N/A
6.	Have the design interface requirements been satisfied?	☐ Y	☐ N	☒ N/A
7.	Was an appropriate design or analytical method used?	☒ Y	☐ N	☐ N/A
8.	Is the output reasonable compared to inputs?	☒ Y	☐ N	☐ N/A
9.	Are the specified parts, equipment and processes suitable for the required application?	☐ Y	☐ N	☒ N/A
10.	Are the specified materials compatible with each other and the design environmental conditions to which the material will be exposed?	☐ Y	☐ N	☒ N/A
11.	Have adequate maintenance features and requirements been specified?	☐ Y	☐ N	☒ N/A
12.	Are accessibility and other design provisions adequate for performance of needed maintenance and repair?	☐ Y	☐ N	☒ N/A
13.	Has adequate accessibility been provided to perform the in-service inspection expected to be required during the plant life?	☐ Y	☐ N	☒ N/A
14.	Has the design properly considered radiation exposure to the public and plant personnel?	☐ Y	☐ N	☒ N/A
15.	Are the acceptance criteria incorporated in the design documents sufficient to allow verification that design requirements have been satisfactorily accomplished?	☐ Y	☐ N	☒ N/A
16.	Have adequate pre-operational and subsequent periodic test requirements been appropriately specified?	☐ Y	☐ N	☒ N/A
17.	Are adequate handling, storage, cleaning and shipping requirements specified?	☐ Y	☐ N	☒ N/A
18.	Are adequate identification requirements specified?	☐ Y	☐ N	☒ N/A
19.	Is the document prepared and being released under the FANP Quality Assurance Program? If not, are requirements for record preparation review, approval, retention, etc., adequately specified?	☒ Y	☐ N	☐ N/A

AREVA

DESIGN VERIFICATION CHECKLIST

Document Identifier 32 - 5054699 - 00

Comments:

Verified By:	B.R. Grambau		11/29/04
(First, MI, Last)	Printed / Typed Name	Signature	Date

Framatome ANP, Inc., ***an AREVA and Siemens company***

RECORD OF REVISIONS

Revision	Affected Pages	Description of Revision	Date
0	All	Non-proprietary version of AREVA/FANP Document Number 32-5044161-02	11/04

CONTENTS

Section	Heading	Page
1.0	Introduction	4
2.0	Analytical Procedure	7
3.0	Material Properties	11
4.0	Stresses	13
	4.1 Residual Stresses	13
	4.2 Operational Stresses	16
5.0	Stress Intensity Factor Solution	17
	5.1 Finite Element Crack Model	19
	5.2 Stress Intensity Factor Influence Coefficients	19
6.0	Flaw Evaluations	21
7.0	Summary of Results	47
8.0	References	48

Appendix	Heading	Page
A	Development of Finite Element Crack Model	49
B	Development of Stress Intensity Factor Influence Coefficients	60
C	Comparison of Stress Intensity Factor Influence Coefficients for Uphill and Downhill Flaws	72
D	Verification of Computer Code ANSYS	75
E	Computer Files	76
F	Analysis to Address a Three Hour Hold during Cooldown at [ ] °F	77

1.0 Introduction

Due to the susceptibility of Alloy 600 reactor vessel head partial penetration nozzles to primary water stress corrosion cracking (PWSCC), an ID temper bead weld repair procedure has been developed for Palisades CRDM nozzles wherein the lower portion of the nozzle is removed by a boring procedure and the remaining portion of the nozzle is welded to the low alloy steel reactor vessel head above the original [ ] J-groove attachment weld, as shown in Figure 1. A lower replacement nozzle is attached to the remaining original nozzle by this same weld. The repair is more fully described by the design drawing [1] and the technical requirements document [2]. Except for a chamfer at the corner, the original J-groove weld will not be removed, as shown in Figure 2. Since a potential flaw in the J-groove weld can not be sized by currently available non-destructive examination techniques, it is assumed that the "as-left" condition of the remaining J-groove weld includes degraded or cracked weld material extending through the entire J-groove weld and [ ] butter material.

Since it is known from analysis of the Palisades CRDM reactor vessel head nozzle penetrations [12] that the hoop stress in the J-groove weld is greater than the axial stress at the same location, the preferential direction for cracking would be axial, or radial relative to the nozzle. It is postulated that a radial crack in the [ ] weld metal would propagate by PWSCC, through the weld and butter, to the interface with the head material, where it is fully expected that such a crack would then blunt, or arrest, as discussed in Reference 4 for interfaces with low alloy steels. Since the height of the original weld along the bored surface is about [ ]", a radial crack depth extending from the corner of the weld to the low alloy steel head would be very deep. Although primary water stress corrosion cracking would not extend into the head, it is further postulated that a small fatigue initiated flaw forms in the low alloy steel head and combines with the stress corrosion crack in the weld to form a large radial corner flaw that would propagate into the head by fatigue crack growth under cyclic loading conditions. An ASME Section XI fracture mechanics analysis is performed to evaluate this worst case flaw in the original J-groove weld and butter.

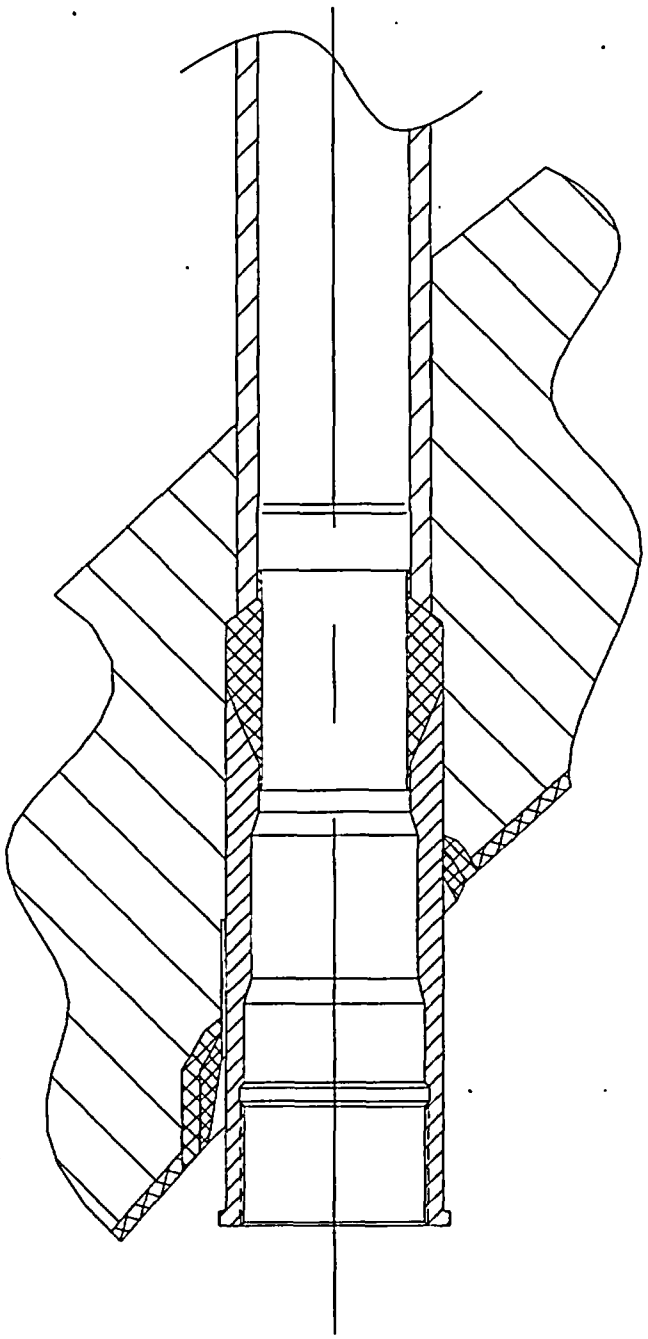

Figure 1. ID Temper Bead Weld Repair

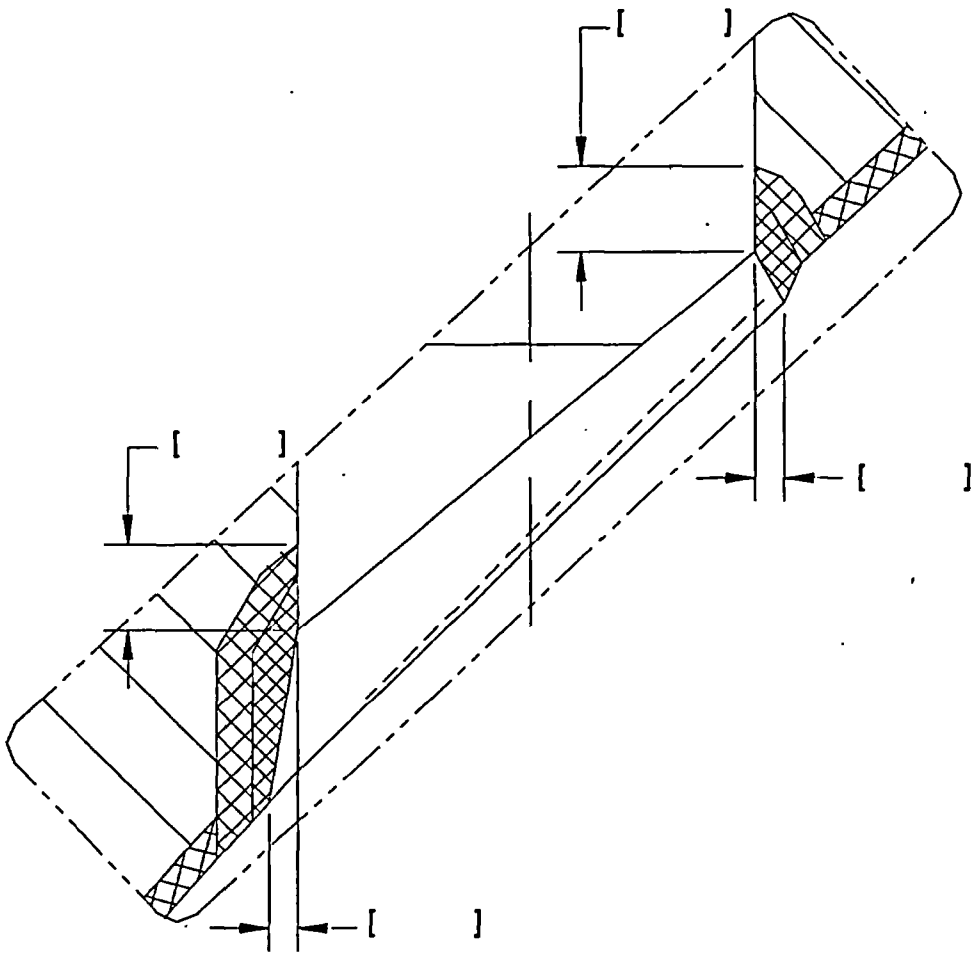

Figure 2. Remaining Portion of Original J-Groove Weld

2.0 Analytical Procedure

[ ]

Figure 3. Postulated Radial Corner Flaw

Figure 4. Analyzed Radial Corner Flaw

Figure 5. Finite Element Crack Model – Postulated Flaw

Figure 6. Finite Element Crack Model – Large Flaw

3.0 Material Properties

The portions of the reactor vessel head (dome and dome-to-shell transition sub-assembly) that contain the CRDM nozzles are fabricated from [ ] plate material [2]. The welds in the dome-to-shell transition sub-assembly and the welds between the dome and the transition sub-assembly are considered to be equivalent to the base material [2].

Yield Strength

From the ASME Code, Section III, Appendix I [8], the specified minimum yield strength for the head material is 50.0 ksi below 100 °F and 43.8 ksi at 600 °F. The value at 600 °F is used as a conservative lower bound for yield strengths at operating temperatures less than 600 °F.

Reference Temperature

A reference temperature of [ ] °F is used for the RT_{NDT} of the [ ] reactor vessel head material [2].

Fracture Toughness

The lower bound K_{Ia} curve of Section XI, Appendix A, Figure A-4200-1 [9], which can be expressed as

$$K_{Ia} = 26.8 + 1.233 \exp [0.0145 (T - RT_{NDT} + 160)] , \quad [7]$$

represents the fracture toughness for crack arrest, where T is the crack tip temperature and RT_{NDT} is the reference nil-ductility temperature of the material. K_{Ia} is in ksi√in, and T and RT_{NDT} are in °F. In the present flaw evaluations, K_{Ia} is limited to a maximum value of 200 ksi√in (upper-shelf fracture toughness). Using the above equation with an RT_{NDT} of [ ] °F, K_{Ia} equals 200 ksi√in at a crack tip temperature of [ ] °F.

Fatigue Crack Growth

Flaw growth due to cyclic loading is calculated using the fatigue crack growth rate model from Article A-4300 of Section XI [9],

$$\frac{da}{dN} = C_o(\Delta K_I)^n,$$

where ΔK_I is the stress intensity factor range in ksi√in and da/dN is in inches/cycle. The crack growth rates for a surface flaw will be used for the evaluation of the corner crack since it is assumed that the degraded condition of the J-groove weld and butter exposes the low alloy steel head material to the primary water environment.

Fatigue Crack Growth Rates for Low Alloy Ferritic Steels in a Primary Water Environment

The following equations (from the 1992 Edition) may be used to represent the fatigue crack growth rates in the 1989 Edition of Section XI [9].

$$\Delta KI = KI_{max} - KI_{min}$$
$$R = KI_{min} / KI_{max}$$

$0 \le R \le 0.25$: $\Delta K_I < 17.74$,

$$n = 5.95$$
$$C_o = 1.02 \times 10^{-12} \times S$$
$$S = 1.0$$

$\Delta K_I \ge 17.74$,

$$n = 1.95$$
$$C_o = 1.01 \times 10^{-7} \times S$$
$$S = 1.0$$

$0.25 \le R \le 0.65$: $\Delta K_I < 17.74\,[\,(3.75R + 0.06) / (26.9R - 5.725)\,]^{0.25}$,

$$n = 5.95$$
$$C_o = 1.02 \times 10^{-12} \times S$$
$$S = 26.9R - 5.725$$

$\Delta K_I \ge 17.74\,[\,(3.75R + 0.06) / (26.9R - 5.725)\,]^{0.25}$,

$$n = 1.95$$
$$C_o = 1.01 \times 10^{-7} \times S$$
$$S = 3.75R + 0.06$$

$0.65 \le R < 1.0$: $\Delta K_I < 12.04$,

$$n = 5.95$$
$$C_o = 1.02 \times 10^{-12} \times S$$
$$S = 11.76$$

$\Delta K_I \ge 12.04$,

$$n = 1.95$$
$$C_o = 1.01 \times 10^{-7} \times S$$
$$S = 2.5$$

4.0 Stresses

There are two categories of stress that need to be considered in the evaluation of J-groove weld flaws. When the original [ ] partial penetration attachment weld was made between the nozzle and the buttered J-groove weld prep in the head, residual stresses were created in the weld, butter, and adjacent portions of the nozzle and head. Since these stresses are secondary in nature, they would tend to be relieved as the flaw propagated through the weld and butter, as discussed in Section 2. In the present flaw evaluations, residual stresses are addressed by increasing the size of the postulated flaw so that it includes the region of tensile residual stress, and then neglecting residual stresses as the crack propagates further into the head. The second category of stress includes operational stresses due to pressure and thermal loads.

4.1 Residual Stresses

Three-dimensional elastic-plastic finite element analysis [3] was performed by Dominion Engineering, Inc. (DEI) to simulate the original welding of the Palisades outermost (45.5°) CRDM nozzle to the reactor vessel head, post-weld loading of the nozzle/head assembly, and modification of the original J-groove weld by the ID temper bead weld repair. The following steps were included in the analysis procedure to determine residual stresses in the nozzle, weld, and adjacent material:

- Deposition of the [ ] butter material on the original J-groove weld prep, using two weld passes, followed by a thermal stress relief of the head and butter at 1100 °F
- Deposition of the J-groove weld using two weld passes (analysis time 9000)
- Simulation of the ASME Code hydrostatic test conditions
- Return to ambient conditions
- Simulation of steady state temperature and pressure loads (analysis time 9004)
- Return to ambient conditions (analysis time 9005)
- Removal of the lower portion of the nozzle and simulation of the head boring and J-groove weld chamfering portions of the ID temper bead weld repair procedure (analysis time 9006). The stresses at the end of this step are the residual stresses considered in the present flaw evaluations.

The portion of the DEI finite element model shown in Figure 7 depicts the final simulated configuration of the repaired nozzle in the vicinity of the J-groove weld on the uphill side. Residual stresses are tabulated in Table 1 along the bored surface of the head, starting at the butter-to-head interface (node 82711). This location has been shown by finite element analysis to have the highest stress intensity factor along the postulated crack front (see Table A-1).

Although the residual hoop stress is still high at the butter/head interface (about [ ] psi), stresses decrease to zero at a distance of 0.640" into the head on the uphill side. As residual stresses would be relieved as a crack propagated through the weld and butter and past this distance into the head, the postulated flaw size will be increased by this amount so that it is not necessary to further consider residual stresses in the present flaw evaluations.

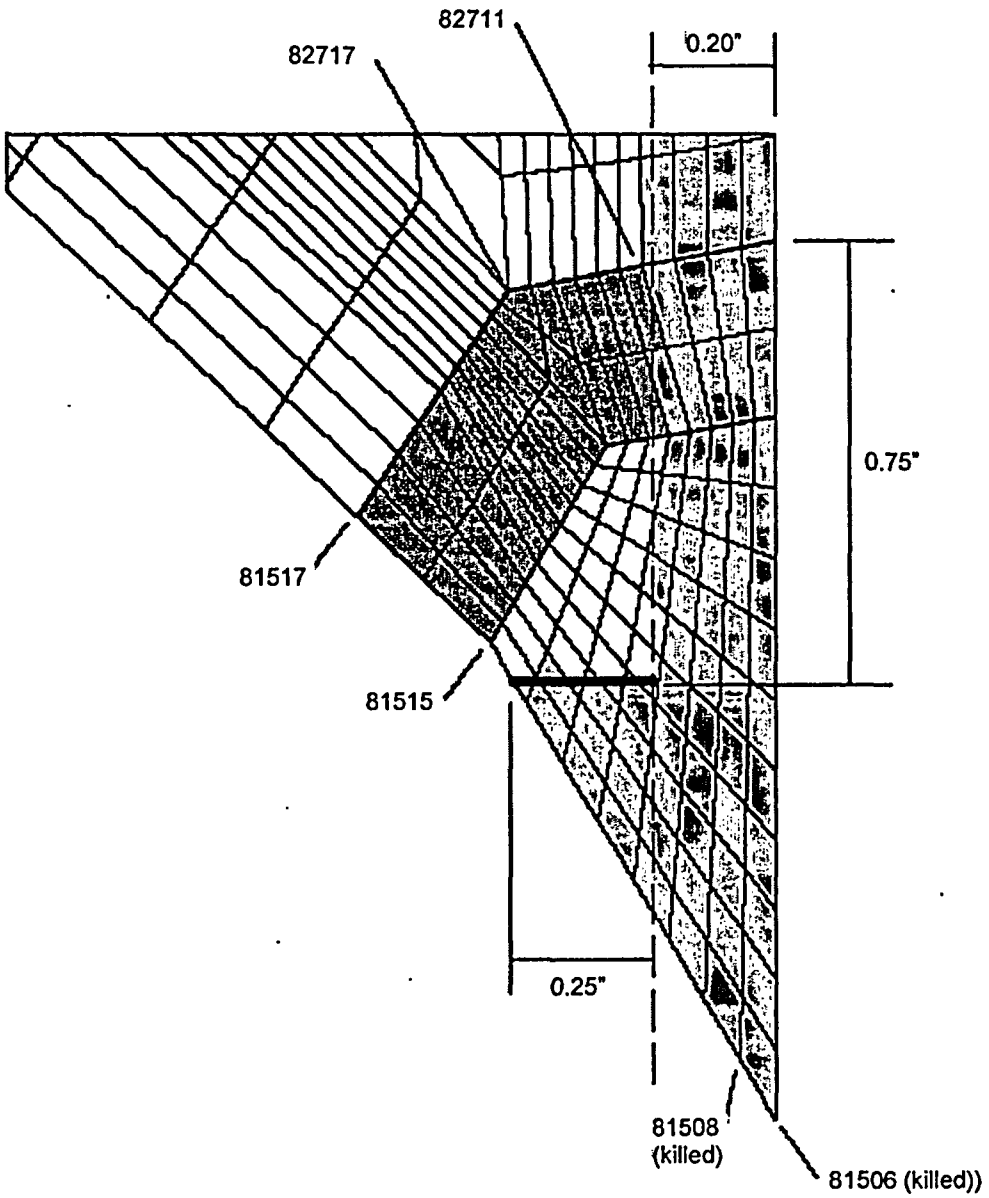

Figure 7. DEI Model of Uphill Weld Region for the Palisades Outermost CRDM Nozzle

Table 1.
Residual Hoop Stresses Along Bored Surface of Head - Uphill Side

Nozzle yield strength = 56 ksi

File: Pal-45B/CRDMcham.results.txt [3]
Time: 9006

Node	Global Coordinates X (in.)	Global Coordinates Z (in.)	Location	Hoop Stress (psi)	Distance into Head[1] (in.)
82711	1.9779	62.938	Butter/Head Interface		0.000
82811	1.9788	63.122	Head		0.184
82911	1.9799	63.339	Head		0.401
83011	1.9811	63.594	Head		0.656
83111	1.9826	63.894	Head		0.956

[1] Distance along a bore from the butter/head interface

Note: By interpolation, the hoop stress becomes compressive at a distance of 0.640" into the head.

4.2 Operational Stresses

Operational hoop stresses are obtained from the results of a three-dimensional linear finite element analysis [6] of the Palisades outermost CRDM nozzle penetration that models the final configuration of the nozzle after an ID temper bead weld repair. Hoop stresses are used since these stresses are perpendicular to the crack face and would therefore open the crack. Stresses are given in Reference 6 at fifteen locations[1] within the weld and adjacent material for the following transients:

1. Heatup and Cooldown (HUCD)
2. Normal Power Changes (NPCH)
3. Fast Power Changes (FPCH)
4. Normal Step Power Changes, or Plant Loading and Unloading (PLUL)
5. Loss of Load (LL)
6. Loss of Flow (LF)
7. Safety Valve Operations (SVO)
8. Leak Test (LT)

The operational stresses from Reference 6, calculated for the outermost CEDM nozzle location, conservatively bound the stresses at all other nozzle locations. Based on a review of stresses for the normal power change transient, the largest hoop stresses are found at the uphill side of the nozzle bore.

Stresses are tabulated in the flaw evaluations presented in Section 6.0, where the maximum and minimum hoop stresses are listed for each analyzed transient. These stresses will produce the largest stress intensity factor ranges and therefore maximize fatigue crack growth. The maximum stress is also used to calculate stress intensity factors at the final flaw size for comparison with the required Section XI fracture toughness. Additional stresses are considered as required to address the low temperature condition that occurs at the end of the cooldown ramp.

[1] These fifteen locations were selected to provide a good fit for the seven term bi-variant stress polynomial used to develop the stress intensity factor influence coefficient solution described in Section 5.0. Typical stress points are depicted in Figure B-5 for an uncracked finite element model.

5.0 Stress Intensity Factor Solution

Finite element analysis is used to develop stress intensity factors for radial flaws in the J-groove weld prep area of the reactor vessel head, utilizing crack tip elements along a crack front. [

]

The stress intensity factor at position "j" on the crack front of a J-groove weld flaw is expressed as

$K_{I,j} = [$]

where [

]

$\sigma(x,y) = [$]

describing the bi-variant stress distribution over the crack face, and A_p is the pressure on the crack face. The x,y crack face coordinate axes are shown in Figure 8 for a typical J-groove flaw shape, along with the defining flaw size parameters, "a" (J-groove width), and "b" (J-groove height).

Plastic Zone Correction

The Irwin plasticity correction is used to account for a moderate amount of yielding at the crack tip. For plane strain conditions, the increase in flaw size normal to the crack front is

$$\Delta n_e = \frac{1}{6\pi}\left(\frac{K_I(a,b)}{\sigma_y}\right)^2$$ [Ref. 5, Eqn. (2.63)]

where $K_I(a,b)$ = stress intensity factor based on the actual crack size

σ_y = material yield strength

A stress intensity factor, $K_I(a_e,b_e)$, is then calculated based on the effective crack size,

$$a_e = a + \Delta n_{e,1} \times n_{x,1}$$
$$b_e = b + \Delta n_{e,9}$$

and $n_{x,1}$ is the x-direction cosine of the normal vector at position 1 (see Figure 5 or 6). Additional details are provided in Table 3.

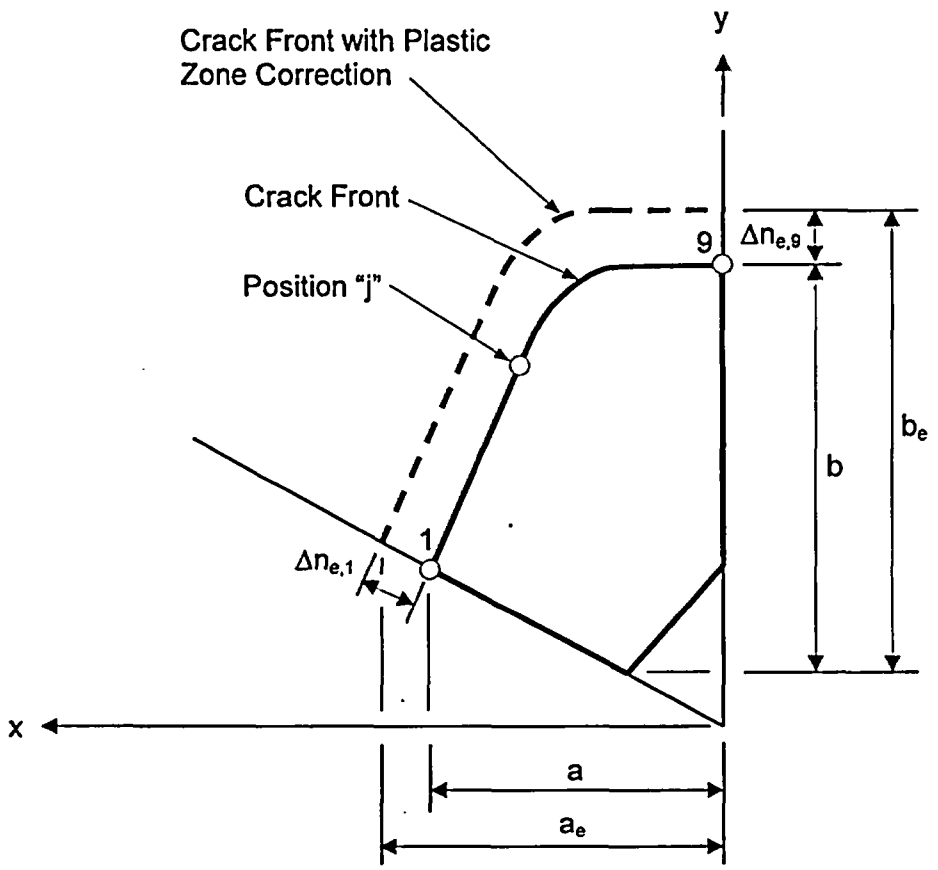

Figure 8. J-Groove Flaw Parameters (with Chamfer)

5.1 Finite Element Crack Model

To obtain accurate stress intensity factors for non-radial nozzle penetrations, a three-dimensional finite element model is developed with crack tip elements along the entire "J-shaped" crack front, extending from the inside surface of the cladding to the bored surface of the head. The original nozzle, J-groove weld and butter, and a portion of the bottom head and cladding are modeled with the ANSYS finite element computer program [10] and stress intensity factors are obtained using the program's KCALC routine.

[

]

Although a PWSCC flaw would only encompass the J-groove weld and butter, it is postulated that a fatigue flaw initiates in the low alloy steel head at the butter-to-head interface. Furthermore, to account for the presence of residual stresses from the welding process, the initial combined PWSCC and fatigue flaw is sized so that it extends into the head to a point where the residual stresses are compressive. As shown in Section 4.1, this penalty on flaw size is 0.640" on the uphill side of the nozzle.

Two finite element models were developed to investigate flaws on the uphill side of the nozzle, as shown in Figure 5 for a flaw at the butter-to-head interface, and in Figure 6 for a larger flaw that bounds the flaw size adjustment to account for residual stress. In these models, the crack front is along the line connecting the wedge shaped crack tip elements.

5.2 Stress Intensity Factor Influence Coefficients

Stress intensity factor influence coefficients are developed in Appendix B for a J-groove flaw in an arbitrary stress field. Table 2 presents influence coefficients for nine positions along the crack front, as indicated in Figure 5 for the postulated flaw and in Figure 6 for the large flaw. For other flaw sizes, influence coefficients are obtained by interpolation between the values in Table 2.

Table 2.
Stress Intensity Factor Influence Coefficients for J-Groove Weld Flaws

Postulated (Small) Flaw: a = [ ] in.
b = [ ] in.

Crack Front Position	Stress Distributions						
		X-direction			Y-direction		
	Uniform	Linear	Quadratic	Cubic	Linear	Quadratic	Cubic
	G_0	G_1	G_2	G_3	G_4	G_5	G_6
1							
2							
3							
4							
5							
6							
7							
8							
9							

Large Flaw: a = [ ] in.
b = [ ] in.

Crack Front Position	Stress Distributions						
		X-direction			Y-direction		
	Uniform	Linear	Quadratic	Cubic	Linear	Quadratic	Cubic
	G_0	G_1	G_2	G_3	G_4	G_5	G_6
1							
2							
3							
4							
5							
6							
7							
8							
9							

6.0 Flaw Evaluations

Fatigue crack growth analysis is performed using operational stresses from Reference 6 and the stress intensity factor solution summarized in Table 3. The actual flaw evaluations, presented in Tables 4 through 11, include a comparison of the final stress intensity factor for each transient with the fracture toughness requirements of Section XI. Article IWB-3612 [9] requires that a safety factor of $\sqrt{10}$ be used when comparing the applied stress intensity factor to the fracture toughness for crack arrest. Calculations are performed for a postulated radial corner crack on the uphill side of the Palisades outermost CRDM nozzle penetration. It is shown in Appendix C for the case of pressure loads that J-groove weld stress intensity factors are higher on the uphill side of the penetration than on the downhill side.

Fatigue crack growth is calculated in one-year increments for each of eight transients, using the following basis for accumulating cycles:

Transient	Cycles / 40 Years	Cycles / Year
Heatup and Cooldown	[ ]	[ ]
Normal Power Changes		
Fast Power Changes		
Plant Loading and Unloading		
Loss of Load		
Loss of Flow		
Safety Valve Operations		
Leak Test		

These cycles are distributed uniformly over the service life by linking the incremental crack growth between Tables 4 through 11.

Table 3.
Stress Intensity Factor Solution for Palisades CRDM Nozzle J-Groove Weld Flaw Evaluation

Stress intensity factor:

$KI(a,b) = [\quad\quad\quad

Table 4. Palisades CRDM Nozzle J-Groove Weld Flaw - Heatup/Cooldown

INPUT DATA

Initial Flaw Size:	Postulated J-groove width,	a_p =	[ ]	in. (at stress point 3 of Ref. 6)
	Postulated J-groove height,	b_p =	[ ]	in. (at stress point 13 of Ref. 6)
	Residual stress effect:	Δa =	0.468	in.
		Δb =	0.640	in.
	Effective flaw size:	a =	[ ]	in.
		b =	[ ]	in.
Material Data:	Yield strength,	S_y =	43.8	ksi
	Reference temperature,	RTndt =	[ ]	F
	Upper shelf toughness	=	200	ksi√in

$K_{Ia} = 26.8 + 1.233 \exp [0.0145 (T - RTndt + 160)]$

K_{Ia} is limited to the upper shelf toughness.

Applied Loads:

			Loading Conditions		
			CD1*	HU**	CD2***
			Temperature (F)		
			Pressure (ksi)		
			Kla (ksi√in)		
Stress Points					
ID	x	y	Hoop Stress		
	(in.)	(in.)	(psi)	(psi)	(psi)
1					
2					
3					
4					
5					
6					
7					
8					
9					
10					
11					
12					
13					
14					
15					

* Heatup/cooldown transient at 11.02 hours (during cooldown)
** Heatup/cooldown transient at 2.0 hours (during heatup)
*** Heatup/cooldown transient at 22.611 hours (low temperature at end of cooldown)

Table 4. Palisades CRDM Nozzle J-Groove Weld Flaw - Heatup/Cooldown

FATIGUE CRACK GROWTH OF J-GROOVE FLAW

Transient Description: [ ] cycles over 40 years

ΔN = [ ] cycles/year

				At cladding surface (position 1)					At bored surface (position 9)			
Operating Time (end of yr.)	Cycle	a (in.)	b (in.)	CD1 KI(a,b) (ksi√in)	HU KI(a,b) (ksi√in)	ΔKI (ksi√in)	Δn_1 (in.)	$\Delta a^{(1)}$ (in.)	CD1 KI(a,b) (ksi√in)	HU KI(a,b) (ksi√in)	ΔKI (ksi√in)	$\Delta b = \Delta n_9$ (in.)
0												
1												
2												
3												
4												
5												
6												
7												
8												
9												
10												
11												
12												
13												
14												
15												
16												
17												
18												
19												
20												
21												
22												
23												
24												
25												
26												
27												

Note 1: $\Delta a = \Delta n$ (at position 1) $\times n_x$

Table 4. Palisades CRDM Nozzle J-Groove Weld Flaw - Heatup/Cooldown

FRACTURE TOUGHNESS MARGINS

Period of Operation: Time = 27 years

Flaw Size: a = [ ] in.
b = [ ] in.

Margin = KIa / KI(a_e,b_e)

	Loading Conditions			
	CD1	HU	CD2	
Fracture Toughness, KIa				ksi√in
At cladding surface (position 1)				
KI(a,b)				ksi√in
Δn_e				in.
a_e				in.
At bored surface (position 9)				
KI(a,b)				ksi√in
Δn_e				in.
b_e				in.
At cladding interface (position 3)				
KI(a_e,b_e)				ksi√in
Margin	8.20	#N/A	4.63	
At bored surface (position 9)				
KI(a_e,b_e)				ksi√in
Margin	3.66	#N/A	4.35	

Table 5. Palisades CRDM Nozzle J-Groove Weld Flaw - Normal Power Changes

INPUT DATA

Beginning Flaw Size: Width, a = [ ] in.
Height, b = [ ] in.

Material Data: Yield strength, S_y = 43.8 ksi

Reference temp., RTndt = [ ] F
Upper shelf tough. = 200 ksi√in

KIa = 26.8 + 1.233 exp [0.0145 (T - RTndt + 160)]

KIa is limited to the upper shelf toughness.

Applied Loads:

			Loading Conditions	
			NPCDN*	NPCUP**
			Temperature (F)	
			Pressure (ksi)	
			KIa (ksi√in)	
Stress Points				
ID	x	y	Hoop Stress	
	(in.)	(in.)	(psi)	(psi)
1				
2				
3				
4				
5				
6				
7				
8				
9				
10				
11				
12				
13				
14				
15				

* Normal power change at 4.333 hours (down ramp)
** Normal power change at 0.333 hours (up ramp)

Table 5. Palisades CRDM Nozzle J-Groove Weld Flaw - Normal Power Changes

FATIGUE CRACK GROWTH OF J-GROOVE FLAW

Transient Description: [ ] cycles over 40 years

ΔN = [ ] cycles/year

				At cladding surface (position 1)					At bored surface (position 9)			
Year of Operation (yr.)	Cycle	a (in.)	b (in.)	NPCDN KI(a,b) (ksi√in)	NPCUP KI(a,b) (ksi√in)	ΔKI (ksi√in)	Δn_1 (in.)	$\Delta a^{(1)}$ (in.)	NPCDN KI(a,b) (ksi√in)	NPCUP KI(a,b) (ksi√in)	ΔKI (ksi√in)	$\Delta b = \Delta n_9$ (in.)
1												
2												
3												
4												
5												
6												
7												
8												
9												
10												
11												
12												
13												
14												
15												
16												
17												
18												
19												
20												
21												
22												
23												
24												
25												
26												
27												
28												

Note 1: $\Delta a = \Delta n$ (at position 1) $\times n_x$

Table 5. Palisades CRDM Nozzle J-Groove Weld Flaw - Normal Power Changes

FRACTURE TOUGHNESS MARGINS

Period of Operation: Time = 27 years

Flaw Size: a = [ ] in.
b = [ ] in.

Margin = KIa / KI(a_e,b_e)

	Loading Conditions		
	NPCDN	NPCUP	
Fracture Toughness, KIa			ksi√in
At cladding surface (position 1)			
KI(a,b)			ksi√in
Δn_e			in.
a_e			in.
At bored surface (position 9)			
KI(a,b)			ksi√in
Δn_e			in.
b_e			in.
At cladding interface (position 3)			
KI(a_e,b_e)			ksi√in
Margin	11.49	#N/A	
At bored surface (position 9)			
KI(a_e,b_e)			ksi√in
Margin	3.71	11.47	

Table 6. Palisades CRDM Nozzle J-Groove Weld Flaw - Fast Power Changes

INPUT DATA

Beginning Flaw Size: Width, a = [ ] in.
Height, b = [ ] in.

Material Data: Yield strength, S_y = 43.8 ksi

Reference temp., RTndt = [ ] F
Upper shelf tough. = 200 ksi√in

Kla = 26.8 + 1.233 exp [0.0145 (T - RTndt + 160)]

Kla is limited to the upper shelf toughness.

Applied Loads:

			Loading Conditions	
			FPCDN*	FPCUP**
			Temperature (F)	
			Pressure (ksi)	
			Kla (ksi√in)	
Stress Points				
ID	x	y	Hoop Stress	
	(in.)	(in.)	(psi)	(psi)
1				
2				
3				
4				
5				
6				
7				
8				
9				
10				
11				
12				
13				
14				
15				

* Fast power change at 4.143 hours (down ramp)
** Fast power change at 0.143 hours (up ramp)

Table 6. Palisades CRDM Nozzle J-Groove Weld Flaw - Fast Power Changes

FATIGUE CRACK GROWTH OF J-GROOVE FLAW

Transient Description: [ ] cycles over 40 years

ΔN = [ ] cycles/year

				At cladding surface (position 1)					At bored surface (position 9)			
Year of Operation (yr.)	Cycle	a (in.)	b (in.)	FPCDN KI(a,b) (ksi√in)	FPCUP KI(a,b) (ksi√in)	ΔKI (ksi√in)	Δn_1 (in.)	$\Delta a^{(1)}$ (in.)	FPCDN KI(a,b) (ksi√in)	FPCUP KI(a,b) (ksi√in)	ΔKI (ksi√in)	$\Delta b = \Delta n_9$ (in.)
1												
2												
3												
4												
5												
6												
7												
8												
9												
10												
11												
12												
13												
14												
15												
16												
17												
18												
19												
20												
21												
22												
23												
24												
25												
26												
27												
28												

Note 1: $\Delta a = \Delta n$ (at position 1) $\times n_x$

Table 6. Palisades CRDM Nozzle J-Groove Weld Flaw - Fast Power Changes

FRACTURE TOUGHNESS MARGINS

Period of Operation: Time = 27 years

Flaw Size: a = [ ] in.
b = [ ] in.

Margin = KIa / KI(a_e,b_e)

	Loading Conditions		
	FPCDN	FPCUP	
Fracture Toughness, KIa			ksi√in
At cladding surface (position 1)			
KI(a,b)			ksi√in
Δn_e			in.
a_e			in.
At bored surface (position 9)			
KI(a,b)			ksi√in
Δn_e			in.
b_e			in.
At cladding interface (position 3)			
KI(a_e,b_e)			ksi√in
Margin	33.33	#N/A	
At bored surface (position 9)			
KI(a_e,b_e)			ksi√in
Margin	4.35	7.80	

Table 7. Palisades CRDM Nozzle J-Groove Weld Flaw - Plant Loading/Unloading

INPUT DATA

Beginning Flaw Size: Width, a = [ ] in.
Height, b = [ ] in.

Material Data: Yield strength, S_y = 43.8 ksi

Reference temp., RTndt = [ ] F
Upper shelf tough. = 200 ksi√in

KIa = 26.8 + 1.233 exp [0.0145 (T - RTndt + 160)]

KIa is limited to the upper shelf toughness.

Applied Loads:

			Loading Conditions	
			PU*	PL**
			Temperature (F)	
			Pressure (ksi)	
			KIa (ksi√in)	
Stress Points				
ID	x	y	Hoop Stress	
	(in.)	(in.)	(psi)	(psi)
1				
2				
3				
4				
5				
6				
7				
8				
9				
10				
11				
12				
13				
14				
15				

* Plant loading/unloading transient at 3.120 hours (plant unloading)
** Plant loading/unloading transient at 0.138 hours (plant loading)

Table 7. Palisades CRDM Nozzle J-Groove Weld Flaw - Plant Loading/Unloading

FATIGUE CRACK GROWTH OF J-GROOVE FLAW

Transient Description: [ ] cycles over 40 years

ΔN = [ ] cycles/year

				At cladding surface (position 1)					At bored surface (position 9)			
Year of Operation (yr.)	Cycle	a (in.)	b (in.)	PU KI(a,b) (ksi√in)	PL KI(a,b) (ksi√in)	ΔKI (ksi√in)	Δn_1 (in.)	$\Delta a^{(1)}$ (in.)	PU KI(a,b) (ksi√in)	PL KI(a,b) (ksi√in)	ΔKI (ksi√in)	$\Delta b = \Delta n_9$ (in.)
1												
2												
3												
4												
5												
6												
7												
8												
9												
10												
11												
12												
13												
14												
15												
16												
17												
18												
19												
20												
21												
22												
23												
24												
25												
26												
27												
28												

Note 1: $\Delta a = \Delta n$ (at position 1) $\times n_x$

Table 7. Palisades CRDM Nozzle J-Groove Weld Flaw - Plant Loading/Unloading

FRACTURE TOUGHNESS MARGINS

Period of Operation: Time = 27 years

Flaw Size: a = [ ] in.
b = [ ] in.

Margin = KIa / KI(a_e,b_e)

	Loading Conditions		
	PU	PL	
Fracture Toughness, KIa	200	200	ksi√in
At cladding surface (position 1)			
KI(a,b)			ksi√in
Δn_e			in.
a_e			in.
At bored surface (position 9)			
KI(a,b)			ksi√in
Δn_e			in.
b_e			in.
At cladding interface (position 3)			
KI(a_e,b_e)			ksi√in
Margin	#N/A	#N/A	
At bored surface (position 9)			
KI(a_e,b_e)			ksi√in
Margin	5.38	5.73	

Table 8. Palisades CRDM Nozzle J-Groove Weld Flaw - Loss of Load

INPUT DATA

Beginning Flaw Size: Width, a = [ ] in.
Height, b = [ ] in.

Material Data: Yield strength, S_y = 43.8 ksi

Reference temp., RTndt = [ ] F
Upper shelf tough. = 200 ksi√in

KIa = 26.8 + 1.233 exp [0.0145 (T - RTndt + 160)]

KIa is limited to the upper shelf toughness.

Applied Loads:

			Loading Conditions	
			LL1*	LL2**
			Temperature (F)	
			Pressure (ksi)	
			KIa (ksi√in)	
Stress Points				
ID	x	y	Hoop Stress	
	(in.)	(in.)	(psi)	(psi)
1				
2				
3				
4				
5				
6				
7				
8				
9				
10				
11				
12				
13				
14				
15				

* Loss of load transient at 0.138 hours (maximum thermal gradient)
** Loss of load transient at 4.000 hours (minimum pressure)

Table 8. Palisades CRDM Nozzle J-Groove Weld Flaw - Loss of Load

FATIGUE CRACK GROWTH OF J-GROOVE FLAW

Transient Description: [ ] cycles over 40 years

ΔN = [ ] cycles/year

				At cladding surface (position 1)					At bored surface (position 9)			
Year of Operation (yr.)	Cycle	a (in.)	b (in.)	LL1 KI(a,b) (ksi√in)	LL2 KI(a,b) (ksi√in)	ΔKI (ksi√in)	Δn_1 (in.)	$\Delta a^{(1)}$ (in.)	LL1 KI(a,b) (ksi√in)	LL2 KI(a,b) (ksi√in)	ΔKI (ksi√in)	$\Delta b = \Delta n_9$ (in.)
1												
2												
3												
4												
5												
6												
7												
8												
9												
10												
11												
12												
13												
14												
15												
16												
17												
18												
19												
20												
21												
22												
23												
24												
25												
26												
27												
28												

Note 1: $\Delta a = \Delta n$ (at position 1) $\times n_x$

Table 8. Palisades CRDM Nozzle J-Groove Weld Flaw - Loss of Load

FRACTURE TOUGHNESS MARGINS

Period of Operation: Time = 27 years

Flaw Size: a = [ ] in.
b = [ ] in.

Margin = KIa / KI(a_e,b_e)

	Loading Conditions		
	LL1	LL2	
Fracture Toughness, KIa			ksi√in
At cladding surface (position 1)			
KI(a,b)			ksi√in
Δn_e			in.
a_e			in.
At bored surface (position 9)			
KI(a,b)			ksi√in
Δn_e			in.
b_e			in.
At cladding interface (position 3)			
KI(a_e,b_e)			ksi√in
Margin	13.75	#N/A	
At bored surface (position 9)			
KI(a_e,b_e)			ksi√in
Margin	3.98	6.64	

Table 9. Palisades CRDM Nozzle J-Groove Weld Flaw - Loss of Flow

INPUT DATA

Beginning Flaw Size: Width, a = [ ] in.
Height, b = [ ] in.

Material Data: Yield strength, S_y = 43.8 ksi

Reference temp., RTndt = [ ] F
Upper shelf tough. = 200 ksi√in

KIa = 26.8 + 1.233 exp [0.0145 (T - RTndt + 160)]

KIa is limited to the upper shelf toughness.

Applied Loads:

			Loading Conditions	
			LF1*	LF2**
			Temperature (F)	
			Pressure (ksi)	
			KIa (ksi√in)	
Stress Points				
ID	x	y	Hoop Stress	
	(in.)	(in.)	(psi)	(psi)
1				
2				
3				
4				
5				
6				
7				
8				
9				
10				
11				
12				
13				
14				
15				

* Loss of flow transient at 0.138 hours (maximum thermal gradient)
** Loss of flow transient at 4.000 hours (minimum pressure)

Table 9. Palisades CRDM Nozzle J-Groove Weld Flaw - Loss of Flow

FATIGUE CRACK GROWTH OF J-GROOVE FLAW

Transient Description: [ ] cycles over 40 years

ΔN = [ ] cycles/year

				At cladding surface (position 1)					At bored surface (position 9)			
Year of Operation (yr.)	Cycle	a (in.)	b (in.)	LF1 KI(a,b) (ksi√in)	LF2 KI(a,b) (ksi√in)	ΔKI (ksi√in)	Δn_1 (in.)	$\Delta a^{(1)}$ (in.)	LF1 KI(a,b) (ksi√in)	LF2 KI(a,b) (ksi√in)	ΔKI (ksi√in)	$\Delta b = \Delta n_9$ (in.)
1												
2												
3												
4												
5												
6												
7												
8												
9												
10												
11												
12												
13												
14												
15												
16												
17												
18												
19												
20												
21												
22												
23												
24												
25												
26												
27												
28												

Note 1: $\Delta a = \Delta n$ (at position 1) $\times n_x$

Table 9. Palisades CRDM Nozzle J-Groove Weld Flaw - Loss of Flow

FRACTURE TOUGHNESS MARGINS

Period of Operation: Time = 27 years

Flaw Size: a = [ ] in.
b = [ ] in.

Margin = KIa / KI(a_e,b_e)

	Loading Conditions		
	LF1	LF2	
Fracture Toughness, KIa			ksi√in
At cladding surface (position 1)			
KI(a,b)			ksi√in
Δn_e			in.
a_e			in.
At bored surface (position 9)			
KI(a,b)			ksi√in
Δn_e			in.
b_e			in.
At cladding interface (position 3)			
KI(a_e,b_e)			ksi√in
Margin	13.75	#N/A	
At bored surface (position 9)			
KI(a_e,b_e)			ksi√in
Margin	3.98	6.64	

Table 10. Palisades CRDM Nozzle J-Groove Weld Flaw - Safety Valve Operations

INPUT DATA

Beginning Flaw Size: Width, a = [ ] in.
Height, b = [ ] in.

Material Data: Yield strength, S_y = 43.8 ksi

Reference temp., RTndt = [ ] F
Upper shelf tough. = 200 ksi√in

Kla = 26.8 + 1.233 exp [0.0145 (T - RTndt + 160)]

Kla is limited to the upper shelf toughness.

Applied Loads:

			Loading Conditions	
			SVO1*	SVO2**
			Temperature (F)	
			Pressure (ksi)	
			Kla (ksi√in)	
Stress Points				
ID	x	y	Hoop Stress	
	(in.)	(in.)	(psi)	(psi)
1				
2				
3				
4				
5				
6				
7				
8				
9				
10				
11				
12				
13				
14				
15				

* Safety valve operation transient at 0.135 hours (maximum thermal gradient)
** Safety valve operation transient at 4.000 hours (minimum pressure)

Table 10. Palisades CRDM Nozzle J-Groove Weld Flaw - Safety Valve Operations

FATIGUE CRACK GROWTH OF J-GROOVE FLAW

Transient Description: [ ] cycles over 40 years

ΔN = [ ] cycles/year

				At cladding surface (position 1)					At bored surface (position 9)			
Year of Operation (yr.)	Cycle	a (in.)	b (in.)	SVO1 KI(a,b) (ksi√in)	SVO2 KI(a,b) (ksi√in)	ΔKI (ksi√in)	Δn_1 (in.)	$\Delta a^{(1)}$ (in.)	SVO1 KI(a,b) (ksi√in)	SVO2 KI(a,b) (ksi√in)	ΔKI (ksi√in)	$\Delta b = \Delta n_9$ (in.)
1												
2												
3												
4												
5												
6												
7												
8												
9												
10												
11												
12												
13												
14												
15												
16												
17												
18												
19												
20												
21												
22												
23												
24												
25												
26												
27												
28												

Note 1: $\Delta a = \Delta n$ (at position 1) $\times n_x$

Table 10. Palisades CRDM Nozzle J-Groove Weld Flaw - Safety Valve Operations

FRACTURE TOUGHNESS MARGINS

Period of Operation: Time = 27 years

Flaw Size: a = [ ] in.
b = [ ] in.

Margin = KIa / KI(a_e,b_e)

	Loading Conditions		
	SVO1	SVO2	
Fracture Toughness, KIa			ksi√in
At cladding surface (position 1)			
KI(a,b)			ksi√in
Δn_e			in.
a_e			in.
At bored surface (position 9)			
KI(a,b)			ksi√in
Δn_e			in.
b_e			in.
At cladding interface (position 3)			
KI(a_e,b_e)			ksi√in
Margin	11.95	#N/A	
At bored surface (position 9)			
KI(a_e,b_e)			ksi√in
Margin	3.87	6.64	

Table 11. Palisades CRDM Nozzle J-Groove Weld Flaw - Leak Test

INPUT DATA

Beginning Flaw Size: Width, a = [ ] in.
Height, b = [ ] in.

Material Data: Yield strength, S_y = 43.8 ksi

Reference temp., RTndt = [ ] F
Upper shelf tough. = 200 ksi√in

KIa = 26.8 + 1.233 exp [0.0145 (T - RTndt + 160)]

KIa is limited to the upper shelf toughness.

Applied Loads:

			Loading Conditions	
			LT*	SD**
			Temperature (F)	
			Pressure (ksi)	
			KIa (ksi√in)	
Stress Points				
ID	x	y	Hoop Stress	
	(in.)	(in.)	(psi)	(psi)
1				
2				
3				
4				
5				
6				
7				
8				
9				
10				
11				
12				
13				
14				
15				

* Leak test
** Shutdown

Table 11. Palisades CRDM Nozzle J-Groove Weld Flaw - Leak Test

FATIGUE CRACK GROWTH OF J-GROOVE FLAW

Transient Description: [ ] cycles over 40 years

ΔN = [ ] cycles/year

				At cladding surface (position 1)					At bored surface (position 9)			
Year of Operation (yr.)	Cycle	a (in.)	b (in.)	LT1 KI(a,b) (ksi√in)	LT2 KI(a,b) (ksi√in)	ΔKI (ksi√in)	Δn_1 (in.)	$\Delta a^{(1)}$ (in.)	LT1 KI(a,b) (ksi√in)	LT2 KI(a,b) (ksi√in)	ΔKI (ksi√in)	$\Delta b = \Delta n_9$ (in.)
1												
2												
3												
4												
5												
6												
7												
8												
9												
10												
11												
12												
13												
14												
15												
16												
17												
18												
19												
20												
21												
22												
23												
24												
25												
26												
27												
28												

Note 1: $\Delta a = \Delta n$ (at position 1) $\times n_x$

Table 11. Palisades CRDM Nozzle J-Groove Weld Flaw - Leak Test

FRACTURE TOUGHNESS MARGINS

Period of Operation: Time = 27 years

Flaw Size: a = [ ] in.
b = [ ] in.

Margin = KIa / KI(a_e,b_e)

	Loading Conditions		
	LT1	LT2	
Fracture Toughness, KIa			ksi√in
At cladding surface (position 1)			
KI(a,b)			ksi√in
Δn_e			in.
a_e			in.
At bored surface (position 9)			
KI(a,b)			ksi√in
Δn_e			in.
b_e			in.
At cladding interface (position 3)			
KI(a_e,b_e)			ksi√in
Margin	30.84	#N/A	
At bored surface (position 9)			
KI(a_e,b_e)			ksi√in
Margin	4.52	#N/A	

7.0 Summary of Results

A fracture mechanics analysis has been performed to evaluate a postulated radial crack in the remnants of the original J-groove weld and butter at the Palisades outermost CRDM nozzle reactor vessel head penetration. Results of this analysis are summarized below for the controlling transients.

Flaw Sizes

Initial flaw size,	a_i = [ ]	in.
	b_i =	in.
Final flaw size after 27 years,	a_f =	in.
	b_f =	in.
Flaw growth,	Δa =	in.
	Δb = [ ]	in.

During Cooldown (controlling operating condition)

Temperature,	T = [ ] °F
Fracture toughness,	K_{Ia} = [ ] ksi√in
Maximum stress intensity factor,	K_I = [ ] ksi√in (at bored surface)
Margin:	K_{Ia} / KI = 3.66* > √10 = 3.16

* Minimum margin is 3.51 at 17 years.

End of Cooldown (controlling low temperature condition)

Temperature,	T = [ ] °F
Fracture toughness,	K_{Ia} = [ ] ksi√in
Maximum stress intensity factor,	K_I = [ ] ksi√in (at bored interface)
Safety margin:	K_{Ia} / KI = 4.35 > √10 = 3.16

8.0 References

1. AREVA/FANP Proprietary Drawing 02-5038702E-3.
2. AREVA/FANP Proprietary Document 51-5039171-04.
3. AREVA/FANP Proprietary Document Number 32-5045855-00.
4. AREVA/FANP Proprietary Document 51-5012047-00.
5. T.L. Anderson, Fracture Mechanics: Fundamentals and Applications, CRC Press, 1991.
6. AREVA/FANP Proprietary Document 32-5044089-03.
7. Marston, T.U., "Flaw Evaluation Procedures – Background and Application of ASME Section XI, Appendix A," EPRI Report NP-719-SR, August 1978.
8. ASME Boiler and Pressure Vessel Code, Section III, Nuclear Power Plant Components, Division 1, Appendices, 1989 Edition with No Addenda.
9. ASME Boiler and Pressure Vessel Code, Section XI, Rules for Inservice Inspection of Nuclear Power Plant Components, 1989 Edition with No Addenda.
10. "ANSYS" Finite Element Computer Code, Version 7.1, ANSYS Inc., Canonsburg, PA.
11. Additional Drawings:

    a. Combustion Engineering Proprietary Drawing E 232-118-9.
    b. Combustion Engineering Proprietary Drawing E 232-120-3.

    References 11a and 11b are not retrievable from the Framatome ANP document control system but are referenced here in accordance with Framatome ANP Procedure 0402-01, Appendix 2.

    W.A. Thomas
    Project Manager

12. AREVA/FANP Proprietary Document Number 32-5046440-00.

Appendix A

Development of Finite Element Crack Model

[ ]

Appendix B

Development of Stress Intensity Factor Influence Coefficients

Appendix C

Comparison of Stress Intensity Factor Influence Coefficients for Uphill and Downhill Flaws

[ ]

Appendix D

Verification of Computer Code ANSYS

To verify that the ANSYS finite element computer program [10] is executing properly, two test cases the ANSYS set of verification problems that exercise the SOLID95 3-D 20-node structural solid element used in the present analysis. Test case VM148 analyzes a cantilevered, parabolic beam subjected to a static bending load. Test case VM143 calculates a stress intensity factor for a crack in a plate. Both test cases executed properly, as demonstrated below.

Verification Problem VM148

Bending of a Parabolic Beam

File: vm148.vrt

---------- VM148 RESULTS COMPARISON ----------

End Displacement

	TARGET	ANSYS	RATIO
Y Deflection (in.)	-0.01067	-0.01062	0.995

Verification Problem VM143

Fracture Mechanics Analysis of a Crack in a Plate

File: vm143.vrt

---------- VM143 RESULTS COMPARISON ----------

Stress Intensity Factor by Displacement Extrapolation

	TARGET	ANSYS	RATIO
3-D ANALYSIS	1.0249	1.0620	1.036

Appendix E

Computer Files

Computer output files of all analyses contained in this report are stored in the AREVA COLD storage system*, as listed below.

File Name	Description	Date
CRDM_Jgroove_Crack.output (used in Table A-1)	Stress intensity factors for J-groove weld (small) flaw	04-29-04
CRDM_Jgroove_Crack_Unit_Load.output (used in Table 2)	Influence coefficients for J-groove weld (small) flaw	05-01-04
CrkStr9.cfs (used in Table B-1)	Uncracked model stresses for J-groove weld (small) flaw	05-02-04
CRDM_Model_2_Crack.output (used in Table B-4)	Stress intensity factors for large J-shaped flaw	05-04-04
CRDM_Model_2_Crack_Unit_Load.output (used in Table 2)	Influence coefficients for large J-shaped flaw	05-04-04
CrkStr15.cfs (used in Table B-2)	Uncracked model stresses for large J-shaped flaw	06-23-04
CRDM_Downhill_Crack.output (used in Table C-1)	Stress intensity factors for J-groove weld (small) flaw on downhill side	05-25-04
vm148.vrt (used in Appendix D)	ANSYS verification problem for stress analysis	05-20-04
vm143.vrt (used in Appendix D)	ANSYS verification problem for stress intensity factor	05-20-04

* Note: These files are stored under Document Number 32-5044161-00.

Appendix F

Analysis to Address a Three Hour Hold during Cooldown at [ ] °F

F.1 Introduction

The purpose of this appendix is to document flaw evaluations for a three hour hold occurring at a temperature of [ ] °F during the cooldown transient. Earlier revisions to this document included calculations for a three hour hold at [ ] °F. Evaluating an upper limit of [ ] °F and a lower limit of [ ] °F should provide sufficient operational margin for performing the three hour hold between [ ] °F and [ ] °F.

F.2 Method of Analysis

Applying the same influence coefficient based solution methodology utilized in the fatigue crack growth analysis of Section 6.0, stress intensity factors are calculated at times during cooldown that are influenced by the new three hour hold. The flaw size considered for this analysis is the final flaw size (reported in Section 7.0) after 27 years of service for the eight design transients listed in section 6.0. The hold during cooldown does not affect the stress intensity factor range used for the heatup/cooldown transient to calculate fatigue crack growth since the maximum stress intensity factor occurs during cooldown prior to the hold (at [ ] °F), and the minimum stress intensity factor occurs during the heatup portion of the transient.

Stresses for the revised cooldown curve are provided in Reference 6. Three time points are evaluated to capture the effects of the three hour hold, as listed below.

Time (hr.)	Temperature (°F)	Pressure (psia)	Description
16.987	[ ]	[ ]	Start of three hour hold
19.987			End of three hour hold
21.987			End of [ ] °F/hr cooldown ramp

The additional flaw evaluations performed for the three hour hold are presented in Table F-1.

Table F-1. Palisades CRDM Nozzle J-Groove Weld Flaw - Cooldown with Hold at [ ] F

INPUT DATA

Material Data: Yield strength, S_y = 43.8 ksi

Reference temperature, RTndt = [ ] F
Upper shelf toughness = 200 ksi√in

KIa = 26.8 + 1.233 exp [0.0145 (T - RTndt + 160)]

KIa is limited to the upper shelf toughness.

Applied Loads:

			Loading Conditions		
			CD1*	CD2**	CD3***
			Temperature (F)		
			Pressure (ksi)		
			KIa (ksi√in)		
Stress Points					
ID	x	y	Hoop Stress		
	(in.)	(in.)	(psi)	(psi)	(psi)
1					
2					
3					
4					
5					
6					
7					
8					
9					
10					
11					
12					
13					
14					
15					

* Heatup/cooldown transient at 16.987 hours (start of 3 hour hold)
** Heatup/cooldown transient at 19.987 hours (end of 3 hour hold)
*** Heatup/cooldown transient at 21.987 hours (end of [ ] °F/hr cooldown)

Table F-1. Palisades CRDM Nozzle J-Groove Weld Flaw - Cooldown with Hold at [ ] F

FRACTURE TOUGHNESS MARGINS

Period of Operation: Time = 27 years

Flaw Size: a = [ ] in.
b = [ ] in.

Margin = KIa / KI(a_e;b_e)

	Loading Conditions			
	CD1	CD2	CD3	
Fracture Toughness, KIa				ksi√in
At cladding surface (position 1)				
KI(a,b)				ksi√in
Δn_e				in.
a_e				in.
At bored surface (position 9)				
KI(a,b)				ksi√in
Δn_e				in.
b_e				in.
At cladding interface (position 3)				
KI(a_e,b_e)				ksi√in
Margin	4.86	29.96	4.69	
At bored surface (position 9)				
KI(a_e,b_e)				ksi√in
Margin	3.71	9.12	4.40	

F.3 Summary of Results

Additional flaw evaluations has been performed for the case of a three hour hold during cooldown at [ ] °F. Since stresses at the three hour hold are such that the corresponding stress intensity factors do not affect fatigue crack growth, the magnitude of the stress intensity factors at the previously calculated final flaw size is compared to the Section XI required fracture toughness margin of √10 at the lower temperatures near the end of cooldown. The results of this analysis, summarized below, reveal that the minimum fracture toughness margin occurs at the start of the three hour hold.

Flaw Size at 27 Years of Service

Final flaw size (from page 47), a_f = [ ] in.

b_f = [ ] in.

Start of Three Hour Hold (controlling low temperature condition)

Temperature, T = [ ] °F

Fracture toughness, K_{Ia} = [ ] ksi√in

Maximum stress intensity factor, K_I = [ ] ksi√in (at bored surface)

Margin: K_{Ia} / KI = 3.71 > √10 = 3.16

End of Cooldown Ramp (lowest temperature)

Temperature, T = [ ] °F

Fracture toughness, K_{Ia} = [ ] ksi√in

Maximum stress intensity factor, K_I = [ ] ksi√in (at bored interface)

Margin: K_{Ia} / KI = 4.40 > √10 = 3.16