PSEG Nuclear LLC
P.O. Box 236, Hancocks Bridge, New Jersey 08038-0236

DEC 0 1 2004

LR-N04-0533

PSEG
Nuclear LLC

U.S. Nuclear Regulatory Commission
Attn: Document Control Desk
Washington, DC 20555-0001

RELIEF REQUEST HC-RR-I2-W01
PROPOSED ALTERNATIVE REPAIR METHOD
HOPE CREEK GENERATING STATION
FACILITY OPERATING LICENSE NO. NPF-57
DOCKET NO. 50-354

In accordance with 10 CFR 50.55a, Codes and Standards, paragraph (a)(3)(i), PSEG Nuclear LLC (PSEG) is submitting a proposed alternative to the requirements of the American Society of Mechanical Engineers (ASME) Boiler and Pressure Vessel Code, Section XI, Rules for Inservice Inspection of Nuclear Power Plant Components. This proposed alternative would permit the use of a full structural weld overlay repair for an indication identified in the N2K recirculation inlet nozzle safe-end to nozzle weld joint.

The Hope Creek Unit 1 Second Ten-Year Interval Inservice Inspection (ISI) Program complies with the requirements of the ASME Code Section XI, 1998 Edition, including Addenda through 2000. The second 10-year interval began at the end of Refueling Outage, RFO7 in November 1997 and is projected to end May 2006 (RFO13).

Due to the need to obtain approval of this alternative prior to startup of the unit from the current outage, we are requesting your review and approval prior to Operational Condition 2, which is currently scheduled to occur on December 24, 2004.

No new commitments are identified in this letter. If you have any questions or require additional information, please contact Mr. Michael Mosier at (856) 339-5434.

Sincerely,

Christina L. Perino
Director – Licensing and Nuclear Safety

Enclosure - Overview
Attachment - Relief Request HC-RR-I2-W01

A047

DEC 0 1 2004

C: Mr. S. Collins, Administrator - Region I
U. S. Nuclear Regulatory Commission
475 Allendale Road
King of Prussia, PA 19406

Mr. D. Collins, Project Manager – Hope Creek/Salem
U.S. Nuclear Regulatory Commission
Mail Stop 08C2
Washington, DC 20555-0001

USNRC Senior Resident Inspector – Hope Creek (X24)

Mr. K. Tosch
Manager IV
Bureau of Nuclear Engineering
P. O. Box 415
Trenton, NJ 08625

Overview of
Alternative Repair for the N2K Recirculation Inlet Nozzle Safe-end to Nozzle Weld

Introduction

During Refueling Outage (RFO) 12 Inservice Inspection (ISI) ultrasonic examinations (UT), the dissimilar weld metal joint at the N2K recirculation inlet nozzle safe-end to nozzle weld was examined as part of scheduled ISI population. This weld is a Code examination category B-F, Item No. B5.10 weld. The N2K weld was examined during RFO12 in accordance with Generic Letter 88-01, Category 'C', in conjunction with Risk Informed classification RA. This ASME Section II, Part C, SFA-5.14 ERNiCr-3 UNS N06082 (commercially known as Alloy 82) weld connects an approximately 14 inch outside diameter (OD) by 11 inch inside diameter (ID) stainless steel SA-182 Grade F316L safe-end buttered with ASME Section II, Part C, SFA-5.11 ENiCrFe-3, UNS W86182 (commercially known as Alloy 182) to the SA-508 Class 2 low alloy steel nozzle buttered with Alloy 182.

The weld was examined with an ASME Section XI, Appendix VIII qualified, Electric Power Research Institute (EPRI) - Performance Demonstration Initiative (PDI) procedure. The inspection was performed using automated UT with 45° longitudinal waves scanning in the clockwise (CW) and counter-clockwise (CCW) directions, which detected the flaw. As a result of this examination, an axial indication was identified at approximately 90° clockwise (3 o'clock) from top dead center looking into the nozzle and toward the Reactor Vessel (RV). Based on the UT data, the axial indication was classified as an ID connected planar flaw, contained solely within the safe-end to nozzle weld and buttering.

The flaw is believed not to extend through wall as verified by no observed leakage of the entire OD weld surface and adjacent areas. Estimates on indication depth provided from information available from the detection and length sizing examination data indicates that the flaw size estimates would exceed the acceptance criteria stated in IWB-3514-2.

Degradation Mechanism

Even though the apparent cause evaluation has not been completed, experience at the same joint on the core spray nozzle at Hope Creek in 1997 and at other Boiling Water Reactors (BWRs) in the last few years lead one to believe that the cause of the flaw is most likely due to stress corrosion cracking (SCC).

The original Construction Code for the reactor vessel is ASME Section III, 1968 Edition, including Addenda through Summer 1970 and Paragraph NB-3338.2(d)(4) of the Winter 1971 Addenda supersedes Paragraph I-613(d) of the 1968 Edition.

The original Construction Code for the safe-end is ASME Section III, 1977 Edition, including Addenda through Winter 1978.

Overview of
Alternative Repair for the N2K Recirculation Inlet Nozzle Safe-end to Nozzle Weld

The existing safe-end to nozzle weld is Alloy 82 and connects a stainless steel SA-182 Grade F316L safe-end buttered with Alloy 182, to the SA-508 Class 2 low alloy steel nozzle, also buttered with Alloy 182. A portion of the original Alloy 82/182 safe-end to nozzle weld remains on the nozzle side as a result of installing a modified safe-end with an integrally attached thermal sleeve prior to going into service (see Attachment 1, Figures 1 and 2). The N2K weld underwent Mechanical Stress Improvement Process (MSIP) treatment during RFO8 (1999).

The function of the N2K nozzle is to connect a portion of the recirculation system inlet piping to the reactor vessel (RV).

SCC Mitigation by Weld Overlay Repairs

PSEG Nuclear has decided to mitigate the flaw employing a weld overlay repair using machine gas tungsten arc welding (GTAW) and Alloy 52 weld metal. Weld overlay repairs have been used in the BWR industry since the late 1970s to repair flaws due to SCC, including safe-end to nozzle welds. The experience with weld overlays in the BWR industry has been excellent. It is approved as an effective SCC mitigating technique in USNRC Generic Letter 88-01/ NUREG-0313, Rev. 2.

Although MSIP was performed, as a further preventative measure, implementation of an overlay at the N2K safe-end to nozzle weld will provide further mitigation as discussed below:

1. The overlay is designed as a standard (full structural) overlay per the structural requirements in ASME Code Case N-504-2 using paragraph IWB-3640 of ASME Section XI. In the design of a standard overlay, a 360° degree "through the thickness" circumferential flaw is assumed and, therefore, no credit is taken for any portion of the original pipe wall. Hence, all the weld material, where flaw initiation is believed to have occurred, is essentially assumed to be completely flawed. The full ASME Section XI safety margins are restored after the application of a standard overlay.

2. The application of the overlay results in a favorable residual stress field on the inside of the component, which arrests further flaw growth. This is because the overlay establishes compressive residual stresses on the inner half of the pipe, which prevents further SCC.

3. The nickel based Alloy 52 weld rod / wire (ASME Section II, Part C, SFA-5.14, ERNiCrFe-7, UNS N06052), which is used for the GTAW overlay repair, has been shown to be highly resistant to SCC and has properties comparable to those of austenitic stainless steels. This alloy, containing nominally 30 wt. % chromium, and its corresponding wrought material, Alloy 690, have been

demonstrated in laboratory testing, in modeling studies, and in the field, to be highly resistant to SCC initiation and growth in the BWR environment. Alloy 152 electrode (ASME Section II, Part C, SFA-5.11, ENiCrFe-7, UNS W86152, containing the same amount of chromium, may also be utilized for local repairs to the underlying weld metal, if required for unexpected through wall defects.

Similar BWR Experience

The observed flaw at Hope Creek, Unit 1 is consistent with the documented SCC observed at Hope Creek in 1997 on the core spray safe-end to nozzle (N5B) weld. Similar flaws have been observed at other BWRs, including Duane Arnold, Perry, Nine Mile Point 2 and Susquehanna 1.

10 CFR 50.55a Relief Request HC-RR-I2-W01

Proposed Alternative In Accordance with 50.55a(a)(3)(i)
-Alternative Provides Acceptable Level of Quality and Safety-

1. ASME Code Components Affected

Code Class:	1
References:	ASME Section XI, 1998 Edition, including and through the 2000 Addenda ASME Section XI, Case N-504-2 ASME Section XI, Case N-638 NUREG-0313 Rev 2 Generic Letter 88-01
Examination Category:	B-F
Item Number:	B5.10
Description:	Alternative Repair for the N2K Recirculation Inlet Nozzle Safe-end to Nozzle Weld
Component Number:	N2K Recirculation Inlet Nozzle

2. Applicable Code Edition and Addenda

The Hope Creek Unit 1 Second Ten-Year Interval Inservice Inspection (ISI) Program complies with the requirements of the ASME Code Section XI, 1998 Edition, including Addenda through 2000. The second ten-year interval began November 1997 and is projected to end May 2006.

3. Applicable Code Requirements

The following information is from ASME Boiler and Pressure Vessel Code, Section XI, "Rules for Inservice Inspection of Nuclear Power Plant Components," 1998 Edition, including Addenda through 2000, which identifies the specific requirements included in this alternative:

IWA-4421(a) and IWA-4611.1(a) require removal of the detected flaw.

IWA-4610(a) requires that the area to be welded shall be preheated to 300°F minimum for GTAW.

IWA-4610(a) requires that thermocouples (TCs) shall be used to monitor process temperatures.

IWA-4631(b) specifies that the surface of the completed weld on the ferritic steel shall not exceed 100 square inches.

IWA-4632(b) specifies the base material and heat affected zone (HAZ) shall meet IWA-4622. IWA-4622 specifies that the average lateral expansion of the three HAZ impact tests shall be equal to or greater than the average of the three base metal tests.

IWA-4633.2(c) specifies that the first six layers of the weld shall be deposited with heat inputs within ±10% of that used in the procedure qualification test. Subsequent layers shall be deposited using heat input equal to or less than that used for layers beyond the sixth in the procedure qualification.

IWA-4633.2(c) also specifies that at least one layer of weld reinforcement shall be deposited and then this reinforcement shall be removed substantially flush with the surface surrounding the weld using mechanical means.

4. Reason for Request

The request is based on restoring the structural integrity of the N2K recirculation inlet nozzle safe-end to nozzle weld joint using technically sound welding practices and non-destructive examination (NDE), while limiting repair personnel exposure to the maximum extent practical. The following cited Code articles identify the actions that would be required if the repair were conducted in accordance with the Code without exception.

IWA-4421(a) and IWA-4611.1(a) require defect removal in this case. The repair cavity would extend through wall since OD removal would be required. ID removal of the indication would be impractical since it would require the removal of the thermal sleeve and jet pump from the reactor interior.

IWA-4610(a) requires the area to be welded shall be preheated to 300°F minimum for GTAW. Since the nozzle will remain full of water, establishing the 300°F minimum preheat temperature cannot be achieved.

IWA-4610(a) also requires the use of TCs to monitor process temperatures. Due to the personnel exposure associated with the installation and removal of the TCs, the nozzle configuration, and since the nozzle will be full of water, a contact pyrometer will be used in lieu of TCs to verify preheat and interpass temperature limits are met.

IWA-4631(b) specifies the surface of the completed weld on the ferritic steel shall not exceed 100 square inches. Restoring the structural integrity of the safe-end to nozzle

weld with the weld overlay will require welding on more than 100 square inches of surface on the low alloy steel base material.

IWA-4632(b) specifies the base material and HAZ shall meet IWA-4622. IWA-4622 specifies that the average lateral expansion of the three HAZ impact tests shall be equal to or greater than the average of the three base metal tests. The welding procedure qualification supporting the welding procedure specification for this weld overlay requires a 5°F increase to the RT_{NDT} for the low alloy steel nozzle base material.

IWA-4633.2(c) specifies the first six layers of the weld shall be deposited with heat inputs within ±10% of that used in the procedure qualification test. Subsequent layers shall be deposited using heat input equal to or less than that used for layers beyond the sixth in the procedure qualification. Sound welds and their HAZ on low alloy steel P-No.3 Group No. 3 base material can be achieved using machine gas tungsten arc welding (GTAW) with three layers (≥ 0.125 inches thick) using heat inputs within ±10% of that used in the procedure qualification test, with subsequent layers beyond the third using heat inputs that are equal to or less than the heat inputs used beyond the third layer in the procedure qualification test.

IWA-4633.2(c) also specifies that at least one layer of weld reinforcement shall be deposited and then this reinforcement shall be removed substantially flush with the surface surrounding the weld using mechanical means. The weld reinforcement will not removed flush to the surface.

Pursuant to 10 CFR 50.55a(a)(3)(i), an alternative is requested on the basis that the proposed repair will provide an acceptable level of quality and safety.

5. Proposed Alternative and Basis for Use

A full structural weld overlay repair is proposed for the safe-end to nozzle weldments. The nozzle material is SA-508 Class 2 low alloy steel. The safe-end is austenitic stainless steel SA-182 Grade F316L. The existing weld material is Alloy 82 with Alloy 182 buttering.

The weld overlay will be designed consistent with the requirements of NUREG-0313, Revision 2 (which was implemented by Generic Letter 88-01), Code Case N-504-2 "Alternative Rules for Repair of Classes 1, 2, and 3 Austenitic Stainless Steel Piping", Code Case N-638 "Similar and Dissimilar Metal Welding Using Ambient Temperature GTAW Temper Bead Technique", and IWB-3640, ASME SECTION XI 1998 Edition, including Addenda through 2000 with Appendix C.

Welder Qualification And Welding Procedures

All welders and welding operators will be qualified in accordance with ASME Section IX and any special requirements of ASME XI or applicable code cases. Qualified personnel under the AREVA Framatome ANP Welding Program will perform the weld overlay repair.

Welding Procedure Specification (WPS) No. 55-WP3/8/43/F43OLTBSCa3 (machine GTAW with cold wire feed) for welding SFA-5.14, ERNiCrFe-7, UNS N06052, F-No. 43 (commercially known as Alloy 52) will be used.

If repairs to the overlay are required, manual GTAW for welding SFA-5.14, ERNiCrFe-7, UNS N06052, F-No. 43 (commercially known as Alloy 52) or shielded metal arc welding (SMAW), for welding SFA-5.11, ENiCrFe-7, UNS W86152, F-No. 43 (commercially known as Alloy 152), will be used.

Welding Wire and Electrodes

A consumable welding wire highly resistant to SCC was selected for the overlay material. Alloy 52 contains a nominal 30 wt% Cr that imparts excellent resistance to SCC. Where localized repairs are required, Alloy 52 or Alloy 152 will be used. Alloy 152 also contains a nominal 30 wt% Cr that imparts excellent resistance to SCC.

Weld Overlay Design

The weld overlay will extend around the full circumference of the safe-end to nozzle weldment location in accordance with NUREG-0313, Rev. 2, Code Case N-504-2 and Generic Letter 88-01. The overlay length will extend across the projected flaw intersection with the outer surface beyond the extreme axial boundaries of the flaw. The design thickness and length has been computed in accordance with the guidance provided in Code Case N-504-2 and ASME Section XI, IWB-3640, 1998 Edition including Addenda through 2000 and Appendix C. The overlay will completely cover the area of the flaw and other Alloy 182 susceptible material with the highly resistant Alloy 52 weld filler material.

To provide the necessary weld overlay geometry, it will be necessary to weld on the low alloy steel nozzle base material. A temper bead welding approach will be used for this purpose following the guidance of ASME Section XI Code Case N-638 "Similar and Dissimilar Metal Welding Using Ambient Temperature Machine GTAW Temper Bead Technique". This Code Case provides for machine GTAW temper bead weld repairs to P-No. 3 Group No. 3 nozzle base material at ambient

temperature. The temper bead approach was selected because temper bead welding supplants the requirement for post weld heat treatment (PWHT) of the HAZ in welds on low alloy steel material. Also, the temper bead welding technique produces excellent toughness and ductility as demonstrated by welding procedure qualification in the HAZ of welds on low alloy steel materials, and, in this case, results in compressive residual stresses on the inside surface, which assists in inhibiting SCC. This approach provides a comprehensive weld overlay repair and increases the volume under the overlay that can be examined.

The overlay length conforms to the guidance of Code Case N-504-2, which satisfies the stress requirements.

Examination Requirements

The examination requirements for the weld overlay repair are summarized in Table 1. No final post weld examinations will be performed until 48 hours has elapsed after completion of welding. This is required to detect any possible hydrogen induced cracking that may occur in the low alloy steel nozzle HAZ.

NUREG-0313, Rev. 2, and Code Case N-504-2, specify UT using methods and personnel qualified in accordance with ASME Section XI, Appendix I. The UT techniques to be used for the final post-weld examination have been qualified through the EPRI NDE Center, which satisfies the requirements of ASME Section XI, Appendix I. Furthermore, NUREG-0313 states that the UT be performed in accordance with the requirements of the applicable Edition and Addenda of ASME Section XI. ASME Section XI, 1998 Edition including Addenda through 2000 is the Code of record for the 10-year Inservice Inspection Interval. Therefore the acceptance criteria that will be used for the UT will be IWB-3130, Inservice Volumetric and Surface Examinations and ASME Section XI Nonmandatory Appendix P, Weld Overlay Repair of Class 1, 2, and 3 Austenitic Stainless Steel Piping Weldments as clarified on page 13 under Exceptions to Code Case N-638 Paragraph 4.0(b).

Pressure Testing

The completed repair shall be given a system leakage test in accordance with ASME Section XI, IWA-5000, since the pressure boundary has not been penetrated (no leakage has occurred). In the event an unexpected through wall defect is identified, either before or during the repair, relief is requested from the hydrostatic pressure test requirements defined in Code Case N-504-2 and IWA-5000. A system leakage test will be performed in accordance with ASME Section XI, IWA-5000. Precedence

for use of a leak test at normal operating temperature and pressure in lieu of a hydrostatic test has been set with Code Case N416-1 that has been incorporated in the 2000 Addenda of ASME Section XI.

Preheat and PWHT Requirements

Preheat and PWHT are typically required for welding on low alloy steel material. ASME Section III specifies PWHT on P-No. 3 Group No. 3 base materials unless temper bead welding is performed under limited restrictions (area and depth limits). ASME SECTION XI, 1998 Edition including Addenda through 2000, specifies 300°F minimum preheat be used for temper bead welding. PWHT cannot be performed and the preheat requirements would necessitate draining the RV and a portion of the recirculation system piping. This would create unacceptable levels of airborne contamination. Therefore, consistent with ALARA practices and prudent utilization of outage personnel, the RV will not be drained for this activity. The nozzle and connected piping will be full of water.

Alternatives to Code Case N-504-2

Code Case N-504-2 Applicability to Nickel Based Austenitic Steel

Code Case N-504-2 was prepared specifically for austenitic stainless steel material. An alternate application for nickel based austenitic materials (Alloy 52 and Alloy 152) is needed due to the specific materials and configuration of the existing nickel based alloy weld and buttering.

Exception to Code Case N-504-2, Requirement (b)

Code Case N-504-2, Requirement (b) requires the weld overlay shall be low carbon (0.035% maximum) austenitic stainless steel. A nickel-based filler is required and Alloy 52 has been selected to be used.

Exception to Code Case N-504-2, Requirement (e)

Code Case N-504-2, Requirement (e) requires the first two layers of the weld overlay to have a ferrite content of at least 7.5 FN (Ferrite Number). These measurements will not be performed for this overlay since the nickel alloy filler is a fully austenitic material.

Exception to Code Case N-504-2, Requirement (h)

Code Case N-504-2, Requirement (h) specifies that a system hydrostatic test shall be performed in accordance with IWA-5000 if the flaw penetrates the pressure boundary. In the event the flaw becomes through wall, leak testing only, in accordance with ASME Section XI, IWA-5000, will be performed.

Alternatives to Code Case N-638

Exception to Code Case N-638 Paragraph. 1.0(a)

Code Case N-638 paragraph 1.0(a) specifies that the maximum weld area on the finished surface shall be 100 square inches. Restoring the structural integrity of the safe-end to nozzle weld with the weld overlay will require welding on more than 100 square inches of surface on the low alloy steel base material.

Exception to Code Case N-638 Paragraph. 2.0(j)

Code Case N-638 paragraph 2.0(j) specifies that the average lateral expansion of the three HAZ impact tests shall be equal to or greater than the average of the three unaffected base metal tests. This will not be met. The welding procedure qualification supporting the welding procedure specification for this weld overlay requires a 5°F increase to the RT_{NDT} for the low alloy steel nozzle base material.

Exception to Code Case N-638 Paragraph. 4.0(b)

Code Case N-638 paragraph 4.0(b) specifies that the final weld surface and band area (1.5T width) shall be examined using a surface and ultrasonic methods when the completed weld has been at ambient temperature for at least 48 hours. The ultrasonic examination shall be in accordance with ASME SECTION XI Appendix I. Full ultrasonic examination of the 1.5T band will not be performed.

Exception to Code Case N-638 Paragraph. 4.0(c)

Code Case N-638 paragraph 4.0(c) specifies that the area from which weld-attached thermocouples are used have been removed shall be ground and examined using a surface examination method. Thermocouples will not be used.

Basis For The Alternative

IWA-4421(a) and **IWA-4611.1(a)** require defect removal in this case. The repair cavity would extend through wall since OD removal would be required. The ID is inaccessible due to the thermal sleeve. Therefore the flaw will not be removed. Structural weld overlays covering flaws are permitted by Code Case N-504-2, provided the necessary weld overlay geometry is used. Therefore, this alternative provides an acceptable level of quality and safety.

IWA-4610(a) requires the area to be welded shall be preheated to 300°F minimum for GTAW. Since the nozzle will remain full of water, establishing the 300°F minimum preheat temperature cannot be achieved. Code Case N-638, paragraph 1.0(b) provides for machine gas tungsten arc welding (GTAW) temper bead weld repairs to P-No. 3 Group No. 3 nozzle base material at ambient temperature. The ambient temperature temper bead approach was selected because temper bead welding supplants the requirement for PWHT of the heat-affected zones in welds on low alloy steel material. Also, the temper bead welding technique produces excellent toughness and ductility, as demonstrated by welding procedure qualification, in HAZ of welds on low alloy steel materials. AREVA Framatome ANP welding procedure qualifications have been successfully performed using Alloy 52 welds on P-No. 3 Group No. 3 base material using the ambient temperature temper bead technique. Therefore, this alternative provides an acceptable level of quality and safety.

IWA-4610(a) also requires the use of TCs to monitor process temperatures. Due to the personnel exposure associated with the installation and removal of the TCs, the nozzle configuration, and since the nozzle will be full of water, TCs will not be used to verify that preheat and interpass temperature limits are met. In lieu of TCs, a contact pyrometer will be used to verify preheat temperature and interpass temperature compliance with the WPS requirements. The use of a contact pyrometer provides equivalent temperature monitoring capabilities and is recognized as acceptable calibrated measuring and test equipment (M&TE). Therefore, this alternative provides an acceptable level of quality and safety.

IWA-4631(b) specifies the surface of the completed weld on the ferritic steel shall not exceed 100 square inches. Restoring the structural integrity with the weld overlay of the safe-end to nozzle weld will require welding on more than 100 square inches of surface on the low alloy steel base material. If this limit were maintained the length of weld overlay extension on the nozzle base material would be limited to approximately 2.25 inches, including the taper. This distance could be justified as sufficient to provide load redistribution from the weld overlay back into the nozzle without violating ASME III stress limits for primary local and bending stresses, and

secondary and peak stresses. However, this length would not permit a complete UT of the outer 25% of the nozzle and safe-end thickness as specified by Code Case N-504-2. The overlay will extend to the transition taper of the low alloy steel nozzle so that qualified UT of the required volume can be performed. Therefore this alternative provides an acceptable level of quality and safety.

There have been temper bead weld overlay repairs applied to safe-end to nozzle welds in the nuclear industry. Some safe-end to nozzle welds have exceeded the 100 square inch limit. At V. C. Summer, the safe-end to nozzle repair was buttered using a temper bead machine GTAW process, and resulted in an overlay of approximately 300 square inches. At Three Mile Island, primary piping to pressurizer surge nozzle repair resulted in an overlay of approximately 200 square inches.

Code Case N-432 has always allowed temper bead welding on low alloy steel nozzles without limiting the temper bead weld surface area. The two additional conditions required by N-432 that are not required by Code Case N-638 are that temper bead welds have preheat applied and that the procedure qualification be performed on the same specification, type, grade and class of material. As previously discussed, elevated preheat necessitates draining of the RV and a portion of the recirculation system piping. This would create unacceptable levels of airborne contamination.

The ASME Code committees have recognized that the 100 square inches restriction on the surface area is excessive and a draft code case is currently in process with ASME Section XI to increase the surface area limit to 500 square inches. The code case attempts to combine the features of Code Case N-432 and N-638 into a single code case. The supporting analysis for the draft code case (EPRI Technical Report 1008454, Proposed Code Case, Expansion of Temper Bead Repair) concluded that the residual stresses are not detrimentally changed by increasing the surface area of the repair and increasing the HAZ tempering is unaffected by the weld overlay application. Therefore, this alternative provides an acceptable level of quality and safety.

IWA-4632(b) specifies the base material and HAZ shall meet IWA-4622. IWA-4622 specifies that the average lateral expansion of the three HAZ impact tests shall be equal to or greater than the average of the three base metal tests. The welding procedure qualification supporting the welding procedure specification for this overlay requires a 5°F increase to the RT_{NDT} for the low alloy steel nozzle base material at the nozzle HAZ location due to the overlay. This methodology is consistent with ASME Section III. Since the HAZ due to the weld overlay is on the

nozzle outside surface and outside the core region where fluence effects degrade impact properties over time, the RT_{NDT} increase required for the nozzle base material will not be a plant operational limitation. This conclusion assumes the nozzle base material initial RT_{NDT} value is consistent with the initial RT_{NDT} values of the low alloy steel material used in the core region pressure boundary. Therefore this alternative provides an acceptable level of quality and safety.

IWA-4633.2(c) specifies the first six layers of the weld shall be deposited with heat inputs within ±10% of that used in the procedure qualification test. Subsequent layers shall be deposited using heat input equal to or less than that used for layers beyond the sixth in the procedure qualification. Sound welds and their HAZ on low alloy steel P-No.3 Group No. 3 base material can be achieved using machine GTAW with three layers (≥0.125 inch thick) using heat inputs within ±10% of that used in the procedure qualification test with subsequent layers beyond the third using heat inputs that are equal to or less than the heat inputs used beyond the third layer in the procedure qualification test. Code Case N-638, paragraph 3.0(c) specifies this technique for machine GTAW temper bead welding on P-No. 3 Group No. 3 nozzle base material at ambient temperature. AREVA Framatome ANP procedure qualifications have been successfully performed using Alloy 52 welds on P-No. 3 Group No. 3 base material using the ambient temperature temper bead technique. Therefore, this alternative provides an acceptable level of quality and safety.

IWA-4633.2(c) also specifies that at least one layer of weld reinforcement shall be deposited and then this reinforcement shall be removed substantially flush with the surface surrounding the weld using mechanical means. The weld overlay is austenitic and there is no need to remove the final layer. Also, overlays cannot be substantially flush with the surrounding surface, and overlays are permitted per Code Case N-504-2. The toe of the weld on the low alloy steel nozzle shoulder will be indexed between layers such that proper HAZ tempering will result. Therefore, this alternative provides an acceptable level of quality and safety.

Code Case N-638 was approved for generic use in Regulatory Guide 1.147, Revision 13, and was developed for similar and dissimilar metal welding using ambient temperature machine GTAW temper bead technique. The welding methodology of Code Case N-638 will be followed for the overlay when within the 0.125-inch minimum distance from the low alloy steel nozzle base material.

Code Case N-504-2 was approved for generic use in Regulatory Guide 1.147, Revision 13, and was developed for welding on and using austenitic stainless steel material. An alternate application for nickel-based and low alloy steel materials is proposed due to the specific configuration of this weldment. The weld overlay

proposed is austenitic material having a mechanical behavior similar to austenitic stainless steel. It is also compatible with the existing weld and base materials. The methodology of Code Case N-504-2 is to be followed, except for the following:

Exception to Code Case N-504-2, Requirement (b)

A consumable welding wire highly resistant to SCC was selected for the overlay material. This material, designated as UNS N06052, F-No. 43, is a nickel based alloy weld filler material, commonly referred to as Alloy 52 and will be deposited using the machine GTAW process with cold wire feed. Alloy 52 contains about 30 wt% chromium, which imparts excellent corrosion resistance to the material. By comparison, Alloy 82 is identified as a SCC resistant material in NUREG-0313 Revision 2 and contains nominally 20 wt% chromium while Alloy 182 has a nominal chromium content of 15 wt%. With its higher chromium content than Alloy 82, Alloy 52 provides an even higher level of resistance to SCC consistent with the requirements of the Code Case. Therefore, this alternative provides an acceptable level of quality and safety.

Exception to Code Case N-504-2, Requirement (e)

The composition of nickel-based Alloy 52 is such that delta ferrite does not form during welding. Delta ferrite measurements will not be performed for this overlay because Alloy 52 welds are 100% austenitic and contain no delta ferrite due to the high nickel composition (approximately 60 wt% nickel). Therefore, this alternative provides an acceptable level of quality and safety.

Exception to Code Case N-504-2, Requirement (h)

Code Case N-504-2 requirement (h) specifies a system hydrostatic test shall be performed in accordance with IWA-5000 if the flaw penetrates the pressure boundary. Leak testing in accordance with ASME Section XI, IWA-5000, will be performed. Precedence for use of a leak test at normal operating temperature and pressure in lieu of a hydrostatic test has been set with Code Case N416-1 that has been incorporated in the 2000 Addenda of ASME Section XI. Therefore, this alternative provides an acceptable level of quality and safety.

Exception to Code Case N-638 Paragraph. 1.0(a)

Code Case N-638 paragraph 1.0(a) specifies that the maximum weld area on the finished surface shall be 100 square inches. Restoring the structural integrity with the weld overlay of the safe-end to nozzle weld will require welding on more than 100 square inches of surface on the low alloy steel base material. The weld overlay will cover approximately 180 square inches of the low alloy steel nozzle.

There have been temper bead weld overlay repairs applied to safe-end to nozzle welds in the nuclear industry. Two safe-end to nozzle welds have exceeded this limit. These include the safe-end to nozzle repair at V. C. Summer, where the end of the nozzle (approximately 30 inches OD x 3 inches thick wall) was buttered using a temper bead machine GTAW process (approximately 300 square inches) and to the Three Mile Island primary piping to pressurizer surge nozzle (approximately 200 square inches).

Code Case N-432 allows temper bead welding on low alloy steel nozzles without limiting the temper bead weld surface area. The two additional conditions required by N-432 that are not required by Code Case N-638 are that temper bead welds have preheat applied and that the procedure qualification be performed on the same specification, type, grade and class of material. As previously discussed, elevated preheat necessitates draining of the RV and a portion of the recirculation system piping. This would create unacceptable levels of airborne contamination.

The ASME Code committees have recognized that the 100 square inches restriction on the surface area is excessive and a draft code case is currently in process with ASME Section XI to increase the surface area limit to 500 square inches. The code case attempts to combine the features of Code Case N-432 and N-638 into a single code case. The supporting analysis for the draft code case (prepared by EPRI) concluded that the residual stresses are not detrimentally changed by increasing the surface area of the repair and increasing the HAZ tempering is unaffected by the weld overlay application. Therefore, this alternative provides an acceptable level of quality and safety.

Exception to Code Case N-638 Paragraph. 2.0(j)

Code Case N-638 Paragraph 2.0(j) specifies that the average lateral expansion of the three HAZ impact tests shall be equal to or greater than the average of the three unaffected base metal tests. The welding procedure qualification supporting the welding procedure specification for this weld overlay requires a 5°F increase to the RT_{NDT} for the low alloy steel nozzle base material. This methodology is consistent

with ASME Section III. Since the HAZ due to the weld overlay is on the nozzle outside surface and outside the core region where fluence effects degrade impact properties over time, the RT_{NDT} increase required for the nozzle base material will not be a plant operational limitation. This conclusion assumes the nozzle base material initial RT_{NDT} value is consistent with the initial RT_{NDT} values of the low alloy steel material used in the core region pressure boundary. Therefore, this alternative provides an acceptable level of quality and safety.

Exception to Code Case N-638 Paragraph. 4.0(b)

Code Case N-638 Paragraph 4.0(b) specifies that the final weld surface and band area (1.5T width) shall be examined using surface and ultrasonic methods when the completed weld has been at ambient temperature for at least 48 hours. The ultrasonic examination shall be in accordance with ASME SECTION XI, Appendix I. Surface exams will be performed. Full ultrasonic examination of the 1.5T band will not be performed. IWA-4634 requires UT of the weld only. Any laminar flaws in the weld overlay will be evaluated in accordance with ASME SECTION XI Nonmandatory Appendix P, except that as allowed by IWB-3132.3, any flaws that exceed the acceptance standards of Table IWB-3410-1 are acceptable for continued service without repair if an analytical evaluation, as described in IWB-3600, meets the acceptance criteria of IWB-3600. Therefore, this alternative provides an acceptable level of quality and safety.

Exception to Code Case N-638 Paragraph. 4.0(c)

Code Case N-638 paragraph 4.0(c) specifies that the area from which weld-attached thermocouples have been removed shall be ground and examined using a surface examination method. Due to the personnel exposure associated with the installation and removal of the TCs, the nozzle configuration, and since the nozzle will be full of water, TCs will not be used to verify that preheat and interpass temperature limits are met. In lieu of TCs, a contact pyrometer will be used to verify preheat temperature and interpass temperature compliance with the WPS requirements. Therefore, this alternative provides an acceptable level of quality and safety.

The use of overlay filler material that provides excellent resistance to SCC develops an effective barrier to flaw extension. Also, temper bead welding techniques produce excellent toughness and ductility in the weld HAZ low alloy steel materials, and in this case result in compressive residual stresses on the inside surface that help to inhibit SCC. The design of the overlay for the safe-end to nozzle weldment uses methods that are standard in the industry. There are no new or different approaches in this overlay design which are considered first of a kind or inconsistent

with previous approaches. The overlay will be designed as a full structural overlay in accordance with Code Case N-504-2. The temper bead welding technique that will be implemented in accordance with Code Case N-638 will produce a tough, ductile, corrosion-resistant overlay.

Use of Code Cases N-504-2 and N-638 has been accepted in Regulatory Guide 1.147, Revision 13, as providing an acceptable level of quality and safety.

PSEG concludes that the alternative repair approach described above presents an acceptable level of quality and safety to satisfy the requirements of 10CFR50.55a(a)(3)(i).

6. Duration of Proposed Alternative

This alternative repair is requested for the remainder of the plant life.

7. Precedents

The observed flaw at Hope Creek Unit 1 is consistent with the documented SCC observed at Hope Creek in 1997 on the core spray safe-end to nozzle (N5B) weld. Similar flaws have been observed at other BWRs including Duane Arnold (TAC NO. MA8663), Perry, Nine Mile Point 2 and Susquehanna 1.

TABLE 1
Examination Requirements

Exam Description	Method	Technique	Reference
As Found Flaw Detection	Auto UT	PDI Qualified Implementing ASME SECTION XI Appendix VIII Supplement 11	IWB-3514
Pre-weld UT Thickness	Manual UT	0°	N-504-2
Surface Prior to Welding	PT	Color Contrast (Visible) Penetrant	IWA-4611.1(a) N-504-2(c) N-638-4.0(a)
Final Weld Overlay Surface	PT	Color Contrast (Visible) Penetrant	IWA-4634 N-504-2(j) N-638-4.0(b)
Final Weld Overlay for Thickness	UT	0°	IWA-4634 N-504-2(j) N-638-4.0(b)
Final Weld Overlay and Outer 25% of the Underlying Wall Thickness Volumetric Preservice	Auto UT	PDI Qualified Implementing ASME SECTION XI Appendix VIII Supplement 11	IWA-4634 IWB-3514 N-504-2(j) N-638-4.0(b) Appendix P

Figure 1

N2K Recirculation Inlet Nozzle/Safe-end Configuration with Structural Overlay

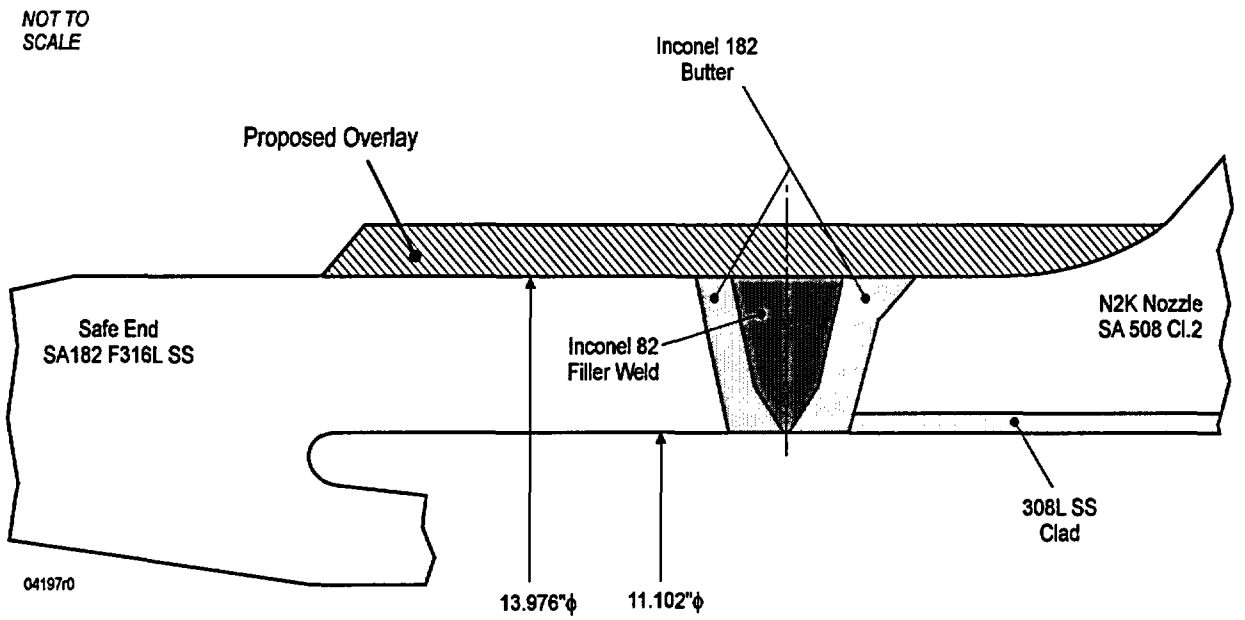

Figure 2

N2K Nozzle to Safe-End Field Configuration
(As Determined from Historical Documentation Research)

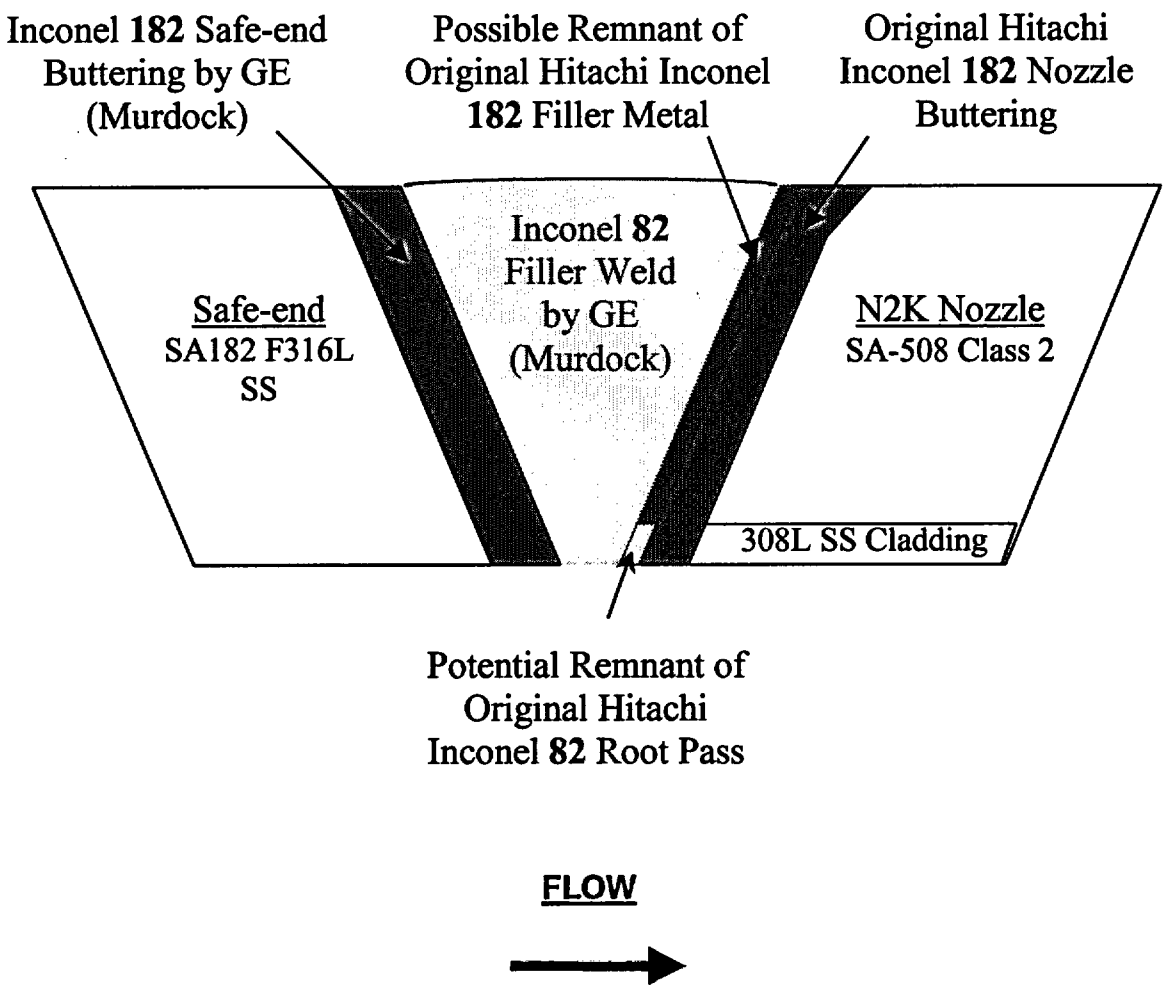

NOTE: Not to Scale