Entergy Nuclear Northeast
Indian Point Energy Center
450 Broadway, GSB
P.O. Box 249
Buchanan, NY 10511-0249
Tel 914 734 6700

Fred Dacimo
Site Vice President
Administration

November 18, 2004

Re: Indian Point Unit 3
Docket No. 50-286
NL-04-145

Document Control Desk
U.S. Nuclear Regulatory Commission
Mail Stop O-P1-17
Washington, DC 20555-0001

Subject: **Supporting Information for License Amendment Request Regarding Indian Point 3 Stretch Power Uprate (TAC MC 3552)**

Reference: 1. Entergy Letter NL-04-069 to NRC; "Proposed Changes to Technical Specifications: Stretch Power Uprate (4.85%) and Adoption of TSTF-339", dated June 3, 2004.

Dear Sir:

Entergy Nuclear Operations, Inc (Entergy) is submitting additional information to support NRC review of the stretch power uprate (SPU) license amendment request (Reference 1) for Indian Point 3 (IP3). This information is being provided as discussed during a meeting with the staff on September 14, 2004. Starting in May of 2004, NRC issued Requests for Additional Information (RAIs) regarding Entergy's SPU amendment request for Indian Point 2 (IP2). Since these RAIs were issued as the Reference 1 letter was being finalized or after submittal, those questions were not specifically addressed when Entergy prepared the SPU request for IP3. Entergy offered at the September 14 meeting to review the applicability of the IP2 RAIs to the IP3 request and provide additional information, where appropriate.

Attachment 1 is a summary listing of those RAIs that are being addressed in this letter. The responses to the RAIs are provided in Attachment 2, except for responses that contain proprietary information. The proprietary responses and the corresponding non-proprietary version of those responses are provided in Attachments 3 and 4, respectively.

As Attachment 3 contains information proprietary to Westinghouse Electric Company, it is supported by an affidavit signed by Westinghouse, the owner of the information. The affidavit sets forth the basis on which the information may be withheld from public disclosure by the Commission and addresses with specificity the considerations listed in paragraph (b)(4) of Section 2.390 of the Commission's regulations. Accordingly, it is respectfully requested that the information that is proprietary to Westinghouse be withheld from public disclosure in accordance

APOI

with 10 CFR 2.390 of the Commission's regulations. Westinghouse authorization letter dated November 17, 2004 (CAW-04-1923, Rev. 1), with the accompanying affidavit, Proprietary Information Notice, and Copyright Notice is provided in Enclosure A.

Correspondence with respect to the copyright on proprietary aspects of the items listed above or the supporting affidavit should reference CAW-04-1923 and should be addressed to J. A. Gresham, Manager, Regulatory Compliance and Plant Licensing, Westinghouse Electric Company LLC, P. O. Box 355, Pittsburgh, Pennsylvania 15230-0355.

In addition, Attachments 5 and 6 contain errata pages for the Stretch Power Uprate Licensing Report transmitted in the original license amendment request, Reference 1. A Table summarizing the changes is provided. Attachment 5 pages are for the proprietary version (WCAP-16212-P) and Attachment 6 pages are for the non-proprietary version (WCAP-16212-NP). Since there is no proprietary information on any of these pages, an application for withholding is not required for these replacement pages.

The additional supporting information and errata pages provided in this letter do not alter the conclusions of the no significant hazards evaluation that supports the subject license amendment request. There are no new commitments being made in this submittal. If you have any questions or require additional information, please contact Mr. Kevin Kingsley at (914) 734-6695.

I declare under penalty of perjury that the foregoing is true and correct. Executed on 11-18-04.

Sincerely,

Fred R. Dacimo
Site Vice President
Indian Point Energy Center

Attachment 1: Summary Listing of RAI Responses
Attachment 2: Additional Information for IP3 SPU License Amendment Request, Based on NRC RAIs Issued for IP2 SPU
Attachment 3: Additional Information for IP3 SPU License Amendment Request, Based on NRC RAIs Issued for IP2 SPU (with Proprietary Information)
Attachment 4: Additional Information for IP3 SPU License Amendment Request, Based on NRC RAIs Issued for IP2 SPU (non-Proprietary version of Attachment 3)
Attachment 5: Errata Pages for WCAP-16212-P
Attachment 6: Errata Pages for WCAP-16212-NP
Enclosure A: Westinghouse Withholding Request for Attachment 3 Proprietary Information

cc: next page

cc: Mr. Patrick D. Milano, Senior Project Manager
Project Directorate I
Division of Licensing Project Management
U.S. Nuclear Regulatory Commission
Mail Stop O 8 C2
Washington, DC 20555-0001

Mr. Samuel J. Collins (w/o Att 3 and Encl A)
Regional Administrator, Region 1
U.S. Nuclear Regulatory Commission
475 Allendale Road
King of Prussia, PA 19406-1415

Resident Inspector's Office (w/o Att 3 and Encl A)
Indian Point Unit 3
U.S. Nuclear Regulatory Commission
P.O. Box 337
Buchanan, NY 10511-0337

Mr. Peter R. Smith, President (w/o Att 3 and Encl A)
New York State Energy, Research
and Development Authority
17 Columbia Circle
Albany, NY 12203

Mr. Paul Eddy (w/o Att 3 and Encl A)
New York State Dept. of Public Service
3 Empire State Plaza
Albany, NY 12223-6399

ATTACHMENT 1 TO NL-04-145

SUMMARY LISTING OF RAI RESPONSES PROVIDED IN THIS LETTER

REGARDING STRETCH POWER UPRATE LICENSE AMENDMENT REQUEST

FOR INDIAN POINT 3

ENTERGY NUCLEAR OPERATIONS, INC.
INDIAN POINT NUCLEAR GENERATING UNIT NO. 3
DOCKET NO. 50-286

No.	RAI	Review Area	From Letter	IP3 Response
1	NL-04-073-FP-1	Fire Protection	NL-04-073	Later
2	NL-04-073-FP-2	Fire Protection	NL-04-073	Later
3	NL-04-073-FP-3a	Fire Protection	NL-04-073	Later
3	NL-04-073-FP-3b	Fire Protection	NL-04-073	Later
3	NL-04-073-FP-3c	Fire Protection	NL-04-073	Later
4	NL-04-073-EL-1	Electrical	NL-04-073	Later
5	NL-04-073-IC-1	Instrumentation and Controls	NL-04-073	Att 2 - Non-Proprietary
6	NL-04-073-IC-2	Instrumentation and Controls	NL-04-073	Att 2 - Non-Proprietary
7	NL-04-073-IC-3	Instrumentation and Controls	NL-04-073	Att 2 - Non-Proprietary
8	NL-04-073-IC-4	Instrumentation and Controls	NL-04-073	Att 2 - Non-Proprietary
9	NL-04-073-IC-5	Instrumentation and Controls	NL-04-073	Att 2 - Non-Proprietary
10	NL-04-073-IC-6	Instrumentation and Controls	NL-04-073	Not Applicable
11	NL-04-073-IC-7	Instrumentation and Controls	NL-04-073	Att 2 - Non-Proprietary
12	NL-04-073-PVM-1a	Pressure Vessel Materials	NL-04-073	Att 2 - Non-Proprietary
12	NL-04-073-PVM-1b	Pressure Vessel Materials	NL-04-073	Att 2 - Non-Proprietary
13	NL-04-073-PVM-2	Pressure Vessel Materials	NL-04-073	Att 2 - Non-Proprietary
14	NL-04-073-PVM-3a	Pressure Vessel Materials	NL-04-073	Not Applicable
14	NL-04-073-PVM-3b	Pressure Vessel Materials	NL-04-073	Att 2 - Non-Proprietary
14	NL-04-073-PVM-3c	Pressure Vessel Materials	NL-04-073	Att 2 - Non-Proprietary
15	NL-04-073-PVM-4a	Pressure Vessel Materials	NL-04-073	Att 2 - Non-Proprietary
15	NL-04-073-PVM-4b	Pressure Vessel Materials	NL-04-073	Att 2 - Non-Proprietary
15	NL-04-073-PVM-4c	Pressure Vessel Materials	NL-04-073	Later
15	NL-04-073-PVM-4d	Pressure Vessel Materials	NL-04-073	Att 2 - Non-Proprietary
16	NL-04-073-RSA-1	Reactor Systems and Analyses	NL-04-073	Att 2 - Non-Proprietary
17	NL-04-073-RSA-2a	Reactor Systems and Analyses	NL-04-073	Att 2 - Non-Proprietary
17	NL-04-073-RSA-2b	Reactor Systems and Analyses	NL-04-073	Att 2 - Non-Proprietary
18	NL-04-073-RSA-3	Reactor Systems and Analyses	NL-04-073	Att 2 - Non-Proprietary
19	NL-04-073-RSA-4	Reactor Systems and Analyses	NL-04-073	Not Applicable
20	NL-04-073-RSA-5	Reactor Systems and Analyses	NL-04-073	Not Applicable
21	NL-04-073-RSA-6	Reactor Systems and Analyses	NL-04-073	Att 3, 4 - Proprietary
22	NL-04-073-RSA-7	Reactor Systems and Analyses	NL-04-073	Att 3, 4 - Proprietary
23	NL-04-073-RSA-8	Reactor Systems and Analyses	NL-04-073	Att 2 - Non-Proprietary

No.	RAI	Review Area	From Letter	IP3 Response
24	NL-04-073-RSA-9a	Reactor Systems and Analyses	NL-04-073	Att 3, 4 - Proprietary
24	NL-04-073-RSA-9b	Reactor Systems and Analyses	NL-04-073	Att 3, 4 - Proprietary
25	NL-04-073-RSA-10a	Reactor Systems and Analyses	NL-04-073	Not Applicable
25	NL-04-073-RSA-10b	Reactor Systems and Analyses	NL-04-073	Att 2 - Non-Proprietary
25	NL-04-073-RSA-10c	Reactor Systems and Analyses	NL-04-073	Att 3, 4 - Proprietary
25	NL-04-073-RSA-10d	Reactor Systems and Analyses	NL-04-073	Att 3, 4 - Proprietary
25	NL-04-073-RSA-10e	Reactor Systems and Analyses	NL-04-073	Att 3, 4 - Proprietary
26	NL-04-073-RSA-11	Reactor Systems and Analyses	NL-04-073	Att 3, 4 - Proprietary
27	NL-04-073-RSA-12a	Reactor Systems and Analyses	NL-04-073	Att 2 - Non-Proprietary
27	NL-04-073-RSA-12b	Reactor Systems and Analyses	NL-04-073	Att 3, 4 - Proprietary
28	NL-04-073-RSA-13a	Reactor Systems and Analyses	NL-04-073	Att 2 - Non-Proprietary
28	NL-04-073-RSA-13b	Reactor Systems and Analyses	NL-04-073	Att 3, 4 - Proprietary
29	NL-04-073-RSA-14	Reactor Systems and Analyses	NL-04-073	Att 3, 4 - Proprietary
30	NL-04-073-RSA-15	Reactor Systems and Analyses	NL-04-073	Att 3, 4 - Proprietary
31	NL-04-073-RSA-16	Reactor Systems and Analyses	NL-04-073	Att 2 - Non-Proprietary
32	NL-04-073-RSA-17a	Reactor Systems and Analyses	NL-04-073	Att 2 - Non-Proprietary
32	NL-04-073-RSA-17b	Reactor Systems and Analyses	NL-04-073	Att 2 - Non-Proprietary
32	NL-04-073-RSA-17c	Reactor Systems and Analyses	NL-04-073	Att 2 - Non-Proprietary
33	NL-04-073-RSA-18	Reactor Systems and Analyses	NL-04-073	Att 2 - Non-Proprietary
34	NL-04-073-RSA-19	Reactor Systems and Analyses	NL-04-073	Att 2 - Non-Proprietary
35	NL-04-073-RSA-20	Reactor Systems and Analyses	NL-04-073	Att 2 - Non-Proprietary
36	NL-04-073-ENV-1	Environmental Considerations	NL-04-073	Not Applicable
37	NL-04-073-ENV-2	Environmental Considerations	NL-04-073	Not Applicable
38	NL-04-073-ENV-3	Environmental Considerations	NL-04-073	Later
39	NL-04-073-FAC-1a	Flow Accelerated Corrosion Program	NL-04-073	Att 2 - Non-Proprietary
39	NL-04-073-FAC-1b	Flow Accelerated Corrosion Program	NL-04-073	Att 2 - Non-Proprietary
39	NL-04-073-FAC-1c	Flow Accelerated Corrosion Program	NL-04-073	Att 2 - Non-Proprietary
39	NL-04-073-FAC-1d	Flow Accelerated Corrosion Program	NL-04-073	Att 2 - Non-Proprietary
39	NL-04-073-FAC-1e	Flow Accelerated Corrosion Program	NL-04-073	Att 2 - Non-Proprietary
40	NL-04-073-PCP-1a	Protective Coatings Program	NL-04-073	Att 2 - Non-Proprietary
40	NL-04-073-PCP-1b	Protective Coatings Program	NL-04-073	Att 2 - Non-Proprietary
40	NL-04-073-PCP-1c	Protective Coatings Program	NL-04-073	Att 2 - Non-Proprietary

No.	RAI	Review Area	From Letter	IP3 Response
41	NL-04-073-SG-1	Steam Generator Structural Integrity Evaluation	NL-04-073	Not Applicable
42	NL-04-073-SG-2a	Steam Generator Structural Integrity Evaluation	NL-04-073	Att 3, 4 - Proprietary
42	NL-04-073-SG-2b	Steam Generator Structural Integrity Evaluation	NL-04-073	Not Applicable
42	NL-04-073-SG-2c	Steam Generator Structural Integrity Evaluation	NL-04-073	Att 3, 4 - Proprietary
43	NL-04-073-SG-3a	Steam Generator Structural Integrity Evaluation	NL-04-073	Att 3, 4 - Proprietary
43	NL-04-073-SG-3b	Steam Generator Structural Integrity Evaluation	NL-04-073	Att 3, 4 - Proprietary
44	NL-04-073-SG-4	Steam Generator Structural Integrity Evaluation	NL-04-073	Att 3, 4 - Proprietary
45	NL-04-073-SG-5	Steam Generator Structural Integrity Evaluation	NL-04-073	Att 2 - Non-Proprietary
46	NL-04-073-SG-6	Steam Generator Structural Integrity Evaluation	NL-04-073	Att 2 - Non-Proprietary
47	NL-04-073-SG-7	Steam Generator Structural Integrity Evaluation	NL-04-073	Att 2 - Non-Proprietary
48	NL-04-073-DOS-1	Dose Assessments	NL-04-073	Att 2 - Non-Proprietary
49	NL-04-073-DOS-2	Dose Assessments	NL-04-073	Att 2 - Non-Proprietary
50	NL-04-073-DOS-3	Dose Assessments	NL-04-073	Att 2 - Non-Proprietary
51	NL-04-073-DOS-4	Dose Assessments	NL-04-073	Att 2 - Non-Proprietary
52	NL-04-073-DOS-5	Dose Assessments	NL-04-073	Att 2 - Non-Proprietary
53	NL-04-086-FDF-1	Fuel Design Features and Components	NL-04-086	Att 3, 4 - Proprietary
54	NL-04-086-FDF-2	Fuel Design Features and Components	NL-04-086	Att 3, 4 - Proprietary
55	NL-04-086-FDF-3	Fuel Design Features and Components	NL-04-086	Att 3, 4 - Proprietary
56	NL-04-086-FDF-4	Fuel Design Features and Components	NL-04-086	Att 3, 4 - Proprietary
57	NL-04-086-FDF-5	Fuel Design Features and Components	NL-04-086	Att 2 - Non-Proprietary
58	NL-04-086-FDF-6	Fuel Design Features and Components	NL-04-086	Not Applicable
59	NL-04-095-LOC-1	LOCA Transients	NL-04-095	Att 2 - Non-Proprietary
60	NL-04-095-LOC-2	LOCA Transients	NL-04-095	Not Applicable
	NL-04-100-LOC-3	LOCA Transients	NL-04-100	Later. See NL-04-100-LOC-3
	NL-04-100-LOC-4	LOCA Transients	NL-04-100	Later. See NL-04-100-LOC-4
	NL-04-100-LOC-5	LOCA Transients	NL-04-100	Later. See NL-04-100-LOC-5
61	NL-04-095-NFS-1	NSSS Fluid Systems	NL-04-095	Att 2 - Non-Proprietary
62	NL-04-095-MDT-1	Mechanical Equipment Design Transients	NL-04-095	Not Applicable
63	NL-04-095-PS-1	Piping and Supports	NL-04-095	Later
64	NL-04-095-GIP-1	Generic Issues and Programs	NL-04-095	Att 2 - Non-Proprietary
65	NL-04-095-GIP-2	Generic Issues and Programs	NL-04-095	Not Applicable
66	NL-04-095-GIP-3	Generic Issues and Programs	NL-04-095	Att 2 - Non-Proprietary

No.	RAI	Review Area	From Letter	IP3 Response
67	NL-04-095-GIP-4	Generic Issues and Programs	NL-04-095	Att 2 - Non-Proprietary
68	NL-04-095-GIP-5	Generic Issues and Programs	NL-04-095	Att 2 - Non-Proprietary
69	NL-04-095-GIP-6	Generic Issues and Programs	NL-04-095	Att 2 - Non-Proprietary
70	NL-04-095-GIP-7	Generic Issues and Programs	NL-04-095	Att 2 - Non-Proprietary
71	NL-04-095-GIP-8	Generic Issues and Programs	NL-04-095	Att 2 - Non-Proprietary
72	NL-04-095-GIP-9	Generic Issues and Programs	NL-04-095	Not Applicable
73	NL-04-095-GIP-10	Generic Issues and Programs	NL-04-095	Att 2 - Non-Proprietary
74	NL-04-095-GIP-11	Generic Issues and Programs	NL-04-095	Later
75	NL-04-095-GIP-12	Generic Issues and Programs	NL-04-095	Later
76	NL-04-095-GIP-13	Generic Issues and Programs	NL-04-095	Later
77	NL-04-095-GIP-14	Generic Issues and Programs	NL-04-095	Later
78	NL-04-100-LOC-3	LOCA Transients	NL-04-100	Later
79	NL-04-100-LOC-4	LOCA Transients	NL-04-100	Later
80	NL-04-100-LOC-5	LOCA Transients	NL-04-100	Later
81	NL-04-100-PVM-3a -1	Pressure Vessel Materials	NL-04-100	Att 2 - Non-Proprietary
81	NL-04-100-PVM-3a -2	Pressure Vessel Materials	NL-04-100	Att 2 - Non-Proprietary
81	NL-04-100-PVM-3a -3	Pressure Vessel Materials	NL-04-100	Att 2 - Non-Proprietary
81	NL-04-100-PVM-3a -4	Pressure Vessel Materials	NL-04-100	Att 2 - Non-Proprietary
82	NL-04-100-PVM-4a -1	Pressure Vessel Materials	NL-04-100	Att 2 - Non-Proprietary
82	NL-04-100-PVM-4d -1	Pressure Vessel Materials	NL-04-100	Later
82	NL-04-100-PVM-4d -2	Pressure Vessel Materials	NL-04-100	Later
82	NL-04-100-PVM-4d -3	Pressure Vessel Materials	NL-04-100	Later
83	NL-04-100-SG-1	Steam Generator Structural Integrity Evaluation	NL-04-100	Not Applicable
84	NL-04-100-SG-3	Steam Generator Structural Integrity Evaluation	NL-04-100	Not Applicable
85	NL-04-121-NRC-1	Mechanical Equipment Design Transients	NL-04-121	Att 2 - Non-Proprietary
86	NL-04-121-NRC-2	Piping and Supports	NL-04-121	Later
87	NL-04-121-NRC-3	LOCA Transients	NL-04-121	Att 2 - Non-Proprietary
88	NL-04-121-NRC-4	Steam Generator Structural Integrity Evaluation	NL-04-121	Att 2 - Non-Proprietary
89	NL-04-121-NRC-5	NSSS Fluid Systems	NL-04-121	Att 2 - Non-Proprietary
90	NL-04-121-NRC-6	Pressure Vessel Materials	NL-04-121	Att 2 - Non-Proprietary
91	NL-04-121-NRC-7	Reactor Systems and Analyses	NL-04-121	Later
92	NL-04-121-NRC-8	Pressure Vessel Materials	NL-04-121	Later

ATTACHMENT 2 TO NL-04-145

ADDITIONAL INFORMATION FOR IP3 SPU LICENSE AMENDMENT REQUEST

BASED ON NRC RAIs ISSUED FOR IP2 SPU

(Refer to Attachments 3 and 4 for other responses involving proprietary information)

ENTERGY NUCLEAR OPERATIONS, INC.
INDIAN POINT NUCLEAR GENERATING UNIT NO. 3
DOCKET NO. 50-286

Question NL-04-073-FP-1:

In NRR RS-001, Revision 0, "Review Standard for Extended Power Uprates," Attachment 2 to Matrix 5, "Supplemental Fire Protection Review Criteria," states that "... power uprates typically result in increases in decay heat generation following plant trips. These increases in decay heat usually do not affect the elements of a fire protection program related to (1) administrative controls, (2) fire suppression and detection systems, (3) fire barriers, (4) fire protection responsibilities of plant personnel, and (5) procedures and resources necessary for the repair of systems required to achieve and maintain cold shutdown. In addition, an increase in decay heat will usually not result in an increase in the potential for a radiological release resulting from a fire. However, the licensee's application should confirm that these elements are not impacted by the extended power uprate..."

Section 10.1, "Fire Protection (10CFR50 Appendix R) Program," of application report (Attachment III to the January 29 letter) does not address these items. At a minimum, provide a statement to address each of these items.

Response NL-04-073-FP-1:

Response to be provided later.

Question NL-04-073-FP-2:

In NRR RS-001, Attachment 2 to Matrix 5, states that "... where licensees rely on less than full capability systems for fire events..., the licensee should provide specific analyses for fire events that demonstrate that (1) fuel integrity is maintained by demonstrating that the fuel design limits are not exceeded and (2) there are no adverse consequences on the reactor pressure vessel integrity or the attached piping. Plants that rely on alternative/dedicated or backup shutdown capability for post-fire safe shutdown should analyze the impact of the power uprate on the alternative/dedicated or backup shutdown capability ... The licensee should identify the impact of the power uprate on the plant's post-fire safe shutdown procedures."

Section 10.1, of application report does not address the items above. As a minimum, provide a statement to address each of these items.

Response NL-04-073-FP-2:

Response to be provided later.

Question NL-04-073-FP-3:

Section 10.1 of Attachment III (WCAP-16157-P) to the License Amendment Request, states that "for the SPU, the steam generator dryout time provides adequate time for the operator to supply feedwater to the secondary side of the steam generator. The Appendix R plant cooldown analysis under SPU conditions shows that IP2 complies with the Appendix R requirement that cold shutdown be achieved within 72 hours after reactor trip following a fire."

a. Provide a discussion, including numerical values, of the change, if any, in steam generator dry-out time as a result of the SPU, and reference to the calculations performed to determine there is adequate time for the required operator action.

b. Provide a discussion, including numerical values, of the change, if any, in time to achieve cold shutdown as a result of the SPU, and reference to the calculations performed to determine that it can be achieved within the required time frame.

c. Provide corresponding references, including appropriate extracts from the Updated Final Safety Analysis Report (UFSAR), plant-specific Appendix R evaluation, etc., that justify these claims.

Response NL-04-073-FP-3a:

Response to be provided later.

Response NL-04-073-FP-3b:

Response to be provided later.

Response NL-04-073-FP-3c:

Response to be provided later.

Question NL-04-073-EL-1:

Address the compensatory measures that the licensee would take to compensate for the depletion of the nuclear unit megavolt-ampere reactive (MVAR) capability on a grid-wide basis.

Response NL-04-073-EL-1:

Response to be provided later.

Question NL-04-073-IC-1:

Item 5 (Instrumentation & Controls) of Attachment III to the April 12 letter indicates that Allowable Values (AVs) are determined by a methodology based upon Method 2 of Instrument Society of America (ISA) Standard 67.04.02. Section 5.12.1 (page 60) of Entergy Specification FIX-95-001, Revision 1, clearly shows that an AV is computed from Limiting Setpoint (LSP), not directly from Analytical Limit (AL). Since the computation appears to match Method 3 rather than Method 2, explain this apparent difference. In addition, the NRC staff has not accepted the Entergy Specification FIX-95-001, Revision 1, methodology during its review of Amendment No. 238 dated November 21, 2003 (IP2 Improved Technical Specification conversion), which method has been used to determine the AVs for stretch power uprate application?

Response NL-04-073-IC-1:

The question posed is specific to IP2 instrument uncertainty determination procedures and documents. However, the intent of the question is to gain clarification as to the strategies used to determine appropriate Allowable Values (AVs) for the RPS/ESFAS Setpoint/AV changes identified in the IP3 SPU LAR. To that end, the following IP3 specific information is provided:

The Allowable Value determination procedure is part of the IP3 IES-3B setpoint methodology which was used prior to and also for the Improved Technical Specification conversion effort. The AV method in that plant technical standard is a conservative application of the ISA 67.04 Method 3 procedure. The conservatism is rooted in the fact that not all the existing "sensed" uncertainty factors are allowed to be considered when computing the AV value. This approach results in a more restrictive AV value than would be computed if the ISA Method 3 approach were applied as described in the industry standard. However, in addition for those RPS/ESFAS functions identified as being changed in the SPU LAR, we also computed AV values in accordance with ISA Method 2 guidelines. In all cases of the LAR identified RPS/ESFAS functions, the AV values presented for SPU license acceptance are conservatively bounding relative to the requirements of the ISA standard for determining appropriate AV values by both the Method 2 and Method 3 approaches. In some cases, due to considerations of historical Technical Specification values and for desires to bring IP3 and IP2 into closer license alignment, the AV values presented for acceptance are more restrictive than the calculated limiting nominal setpoints, thereby further insuring a bounding condition relative to both of the ISA AV methods mentioned.

Appropriate sections of the IP3 setpoint calculations which show these AV determinations are being provided for your information as part of the response to I&C RAI Question 4.

Question NL-04-073-IC-2:

Explain how the component test procedure acceptance criteria are determined, and how the criteria provide adequate assurance that the channel AVs are suitably protected. In addition, explain how this approach meets the requirements of 10 CFR 50.36, which requires that the limiting safety system settings be specified in the Technical Specifications (TSs). Since channel performance is not assessed against the TS AVs unless some other criterion indicates that closer examination is warranted, those other criteria, which are not controlled by the TSs, can result in the TS criteria not being applied.

Response NL-04-073-IC-2:

The component test procedure acceptance criterion is the "As-Found" tolerance. According to IES-3B Rev. 0 the "As-Found" Tolerance is composed of component uncertainty terms associated with calibration CU_{cal} and is calculated as follows:

$AFT = \pm \sqrt{(RA^2 + DR^2 + ALT^2)}$

RA = Reference Accuracy (zero if historical drift is used)

DR = Drift ALT = As Left Tolerance

When as test fails its "As-Found" criteria this triggers an evaluation of the entire loop to determine if the Allowable Value has been exceeded. In many instances, the surveillance procedure identified "As-Found" tolerance is less than the "As-Found" allowance calculated in the loop specific setpoint calculation. This is the case because most test criteria were developed prior to development of formal IES-3B setpoint calculation guidelines.

Testing and calibration of transmitter and rack components typically occurs in two different surveillance tests. The transmitter is tested as a lone component and the rack components are

either tested as a string or as discrete components, depending on the loop structure. Actuation data is taken from a DVM placed either at the input to the rack or at a point of input to an individual component. There are some cases where the instrument loops are divided into as many as 4 surveillance tests. These transmitter and rack tests are not done at the same time and are usually done at different intervals; for example, transmitters are calibrated on a refueling basis and the rack components, up to and including the bistables are tested quarterly or semiannually. It is this diverse scheduling condition that precludes the possibility of directly exercising any Allowable Value that is a true "Loop Allowable Value" as licensed for IP3. Therefore when one test is done, the state of the remainder of the loop is assumed to be within its acceptance band based on previous acceptable "As-Left" conditions. This condition will be re-evaluated if the part of the loop under test fails its As-Found allowance to a degree that depletes the total positive margin included in the implemented trip setpoint. If margin is found to still exist for the particular UNSAT As-Found condition, then the Loop Allowable Value is considered to be still protected based on the previous acceptance condition for the part of the loop not being tested. The component or string that failed the As-Found tolerance will be evaluated under the Performance Monitoring Program relative to its present and previous performance data. The component or components involved in the test UNSAT condition will be either replaced or included in the program's degraded components watch list (components that can not be brought into their required As-Left Tolerance bands are replaced automatically).

Since ISA-RP67.04 Method 2 establishes the Allowable Value without regard for the magnitude of CU_{cal}, the "As-Found" tolerance for a component or string theoretically could exceed the Allowable Value. Were this to be the case, the component or string could be found beyond the Allowable Value and no Condition Report would be initiated for further evaluation. Ten setpoints, corresponding "As-Found" values, and the Allowable Values have been reviewed for each parameter in the IP3 submittal. No component or string in the IP3 submittal has an "As Found" tolerance that exceeds the Allowable Value.

Since the "As-Found" tolerance is composed of CU_{cal} terms (sensible) only, no terms of the Method 2 Allowable Value (unsensed CU_{noncal} terms) are imbedded in it. It is this specific difference, i.e. testing to sensible terms and declaring operability based on non-sensible terms that creates a higher (than necessary in our judgment) potential for INOPERABLE declarations.

For any acceptable As-Found surveillance results to protect a Method 2 Allowable Value with 95/95 certainty, the distance between the Trip Setpoint and the Method 2 Allowable Value would have to be equal to or greater than CU_{cal} since the value is the distance to a less restrictive Method 3 Allowable Value which is based on the sensible conditions we deal with in the surveillances. Doing this is equivalent to an ISARP67.04 Method 1 setpoint and Allowable Value determination, which provides the least operating margin of all ISA methods.

The NRC has endorsed the use of Method 2, which is more restrictive than Method 3, which is under review. In the IP3 implementation of Method 2 (for SPU LAR identified parameters), the LSSS is protected because when a component or string under test is found to perform outside of its uncertainty expectations by more than available setpoint margin, an investigation into the uncertainty condition of the rest of the loop will be performed. When completed, this investigation will provide reliable assessment of the operability of the loop.

Question NL-04-073-IC-3:

The description of the determination of operability in Item 5 of Attachment III refers to the consideration of "actual" errors. Because measurement and test equipment (M&TE) is not perfect and the performance of test procedures is often influenced by setting or reading tolerances and by noise or other inherent errors, the exact magnitude of "actual" errors cannot be determined. At best, device errors can only be statistically bounded. Uncertainty in the assessment of the measurement error introduced by a device is often not insignificant when compared with the uncertainty in the device itself. Some procedures allow the M&TE uncertainty to be as large as 25% or more of the composite uncertainty of the device(s) being tested. Therefore, explain what is meant by the consideration of "actual" errors, and describe how these errors are determined and how they are used in the referenced analyses.

Response NL-04-073-IC-3:

It is recognized that the exact errors cannot be determined when computing loop uncertainties but can only be statistically bounded. However, when engaging in determinations of operability, measurements are taken as needed on components in the affected loop in addition to the UNSAT data of the component that failed. When this measurement data is needed to complete the operability analysis, it is typically collected utilizing the calibration surveillance procedures.

All the "actual" collected component data is included in the analysis of channel error to determine if the entire loop was within the Allowable Value limit. At this point, all error terms are combined algebraically to determine actual operability as opposed to being combined statistically to predict total uncertainty. If the Allowable Value is exceeded, then the instrument loop is declared to have been inoperable.

Question NL-04-073-IC-4:

Provide setpoint calculation documents for the following protection system trip functions listed in Table 6.10-1 of application report:

- Overtemperature delta-T Reactor Trip and Overpower delta-T Reactor Trip functions.
- Reactor Coolant System (RCS) Flow Low Reactor Trip function.
- Steam Generator Water Level-Low-Low Reactor Trip function.
- Steam Generator Water Level-High-High Feedwater Isolation function.
- Steamline Pressure Low (safety injection/steamline [SI/SL] actuation).
- Steam Flow in Two Steamline-High (SI/SL actuation)
- T_{avg}-Low (SI/SL actuation).

Response NL-04-073-IC-4:

The Entergy setpoint uncertainty summaries for all protection system trip functions submitted for the stretch uprate amendment are attached in Table NL-04-073-IC-4-1. This table summarizes

the existing and uprate values for the safety analysis limits (AL), nominal trip setpoints, technical specification allowable values (AV), as well as the uncertainty calculation total implemented allowance (TA) which represents the installed trip value, Total Channel Uncertainty (CU), and setpoint Margin for the SPU. As supporting information for Table NL-04-073-IC-4-1, applicable sections of the specific uncertainty calculations are also included. These attachments include calculation of the allowable values based on Entergy methodology IES-3B with ancillary computations for bounding ISA Method 2 AV determination requirements. The list of included RPS/ESFAS functions for Unit 3 SPU, however, is the following:

- NIS Power Range High Setpoint Reactor Trip
- Overtemperature ΔT Reactor Trip and Overpower ΔT Reactor Trip functions.
- Pressurizer Pressure Low Reactor Trip
- Pressurizer Pressure Low SI Initiation
- Steam Flow in Two Steamlines-High (SI/SL actuation)
- T_{avg}-Low (SI/SL actuation).

TABLE NL-04-073-IC-4-1: INDIAN POINT UNIT 3 STRETCH POWER UPRATE COMPARISON OF EXISTING AND UPRATED RPS/ESFAS PARAMETERS

Protection Function	Safety Analysis Limit(AL)		Nominal Trip Setpoint		TA	CU	Margin	TS Allowable Value	
	Existing	SPU	Existing	SPU	SPU			Existing	SPU
NIS Power Range Reactor Trip High Setpoint	118% RTP	118% RTP	108% RTP	108% RTP	8.3% span	5.4% span	2.9% span	≤109% RTP	≤111% RTP
Overtemperature Delta T Reactor Trip					14.4% ΔT span	12.9% ΔT span	1.5% ΔT span		
K1 max	1.40	1.42							
K1 nominal			1.20	1.22				≤1.285	≤1.26
Overpower Delta T Reactor Trip					6.48% ΔT span	5.99% ΔT span	0.49% ΔT span		
K4 max	1.162	1.164							
K4 nominal			1.1	1.074				≤1.154	≤1.10
Pressurizer Pressure Low Reactor Trip	1735.3 psig	1835.3 psig	1820 psig	1930 psig	11.8% span	8.7% span	3.1% span	≥1790 psig	≥1900 psig
Pressurizer Pressure Low SI initiation	1635.3 psig	1634 psig	1720 psig	1780 psig	18.2% span	8.0% span	10.2% span	≥1690 psig	≥1710 psig
Steam Flow in Two Steamlines – High (SI/SL Actuation)	(1)	(2)	(3)	(4)	9.7% span(high) 28.4% span(low)	6.77% span (high) 16.36% span low)	2.93% span (high) 12.11% span (low)	(5)	(5)
Tavg – Low (SI/SL Actuation)	535°F	535°F	542°F	542°F	9.3% span	2.8% span	6.2% span	≥538.0°F	≥540.5°F

(1) 64% full flow between 0 and 20% load, increasing linearly to 134% full flow at 100% load
(2) 78% full flow between 0 and 20% load, increasing linearly to 144% full flow at 100% load
(3) 40.82% full flow between 0 and 20% load, increasing linearly to 109.87% full flow at 100% load
(4) 43% full flow between 0 and 20% load, increasing linearly to 110% full flow at 100% load
(5) ≤54% full flow between 0 and 20% load, increasing linearly to ≤120% full flow at 100% load

74 pages of supporting documents are provided, following this Table. The next question begins on Page 8, following these documents.

NIS POWER RANGE - HIGH FULL POWER FLUX REACTOR TRIP SETPOINT

6.0 LOOP (BLOCK) DIAGRAM (Typical)

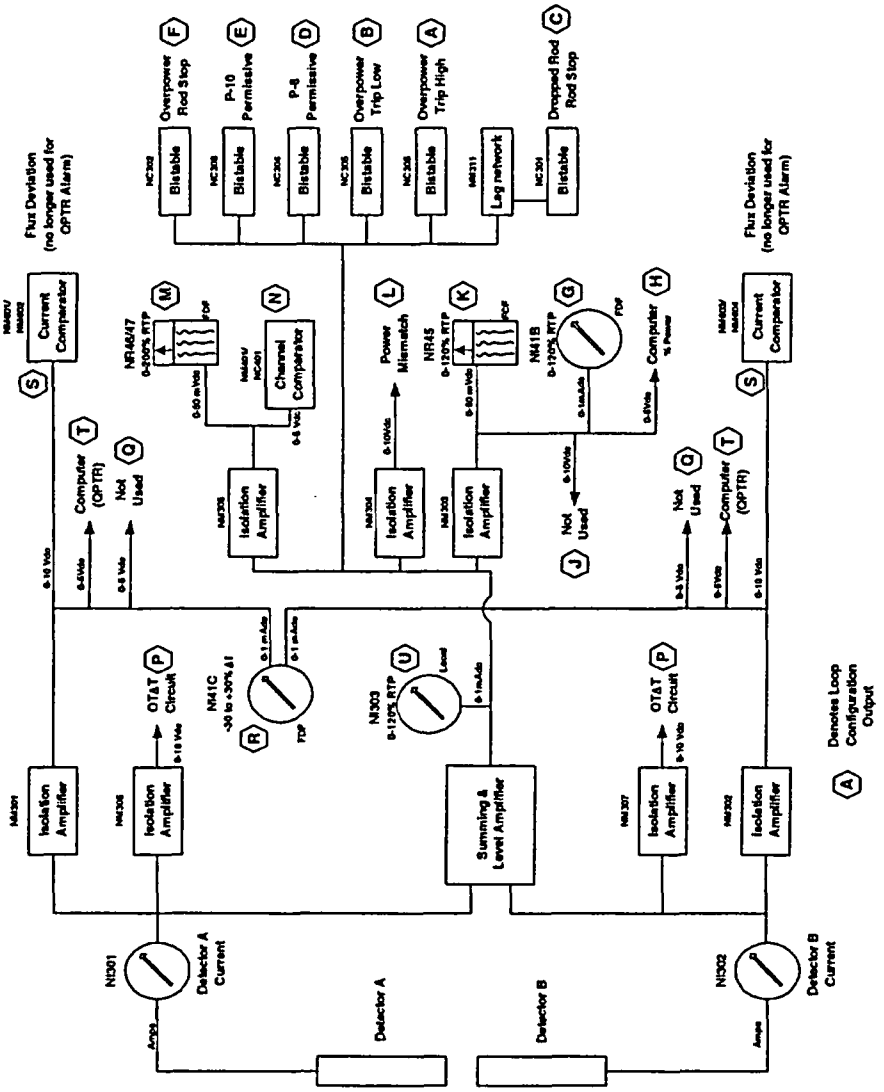

7.4 Calculation of Loop Uncertainties

7.4.1 $LOOP_A$ (Overpower High Range Trip)

Loop configuration A includes the following components and errors (Sections 1.4, 4.4.2):

NM310 Summing & Level Amplifier (SUM)
NC306 Bistable Relay Driver (BRD)

Reference Accuracy (RA_A)

RA_{SUM} = ±0.2% span
RA_{BRD} = ±0.05% span

RA_A = $\pm(0.2^2 + 0.05^2)^{1/2}$ % span
= ±0.21% span

Temperature Effect (TE_A)

TE_{SUM} = ±0.29% span
TE_{BRD} = ±0.00% span

TE_A = ±0.29% span

Drift Effect (DR_A)

DR_{SUM} = ±1.48% span
DR_{BRD} = ±1.1% span

DR_A = $\pm(1.48^2 + 1.1^2)^{1/2}$ % span
= ±1.85% span

MTE Effect (MTE_A)

Per Section 4.5, the error for the M&TE used to calibrate the channel is:

MTE_A = ± 2.93% span

Bistable Setting Tolerance (CAL_A)

Per Section 4.5, the setting tolerance error for the bistable is:

CAL_A = ± 0.417% span

Other Effects

All other effects are either negligible or not applicable.

Total Loop Uncertainty ($LOOP_A$)

The total loop uncertainty is the SRSS combination of all uncertainties associated with the loop.

$$LOOP_A = \pm [(CAL_A)^2 + (RA_A)^2 + (DR_A)^2 + (TE_A)^2 + (MTE_A)^2]^{1/2}$$
$$= \pm [(0.417)^2 + (0.21)^2 + (1.85)^2 + (0.29)^2 + (2.93)^2]^{1/2}$$
$$= \pm 3.51\% \text{ span}$$

Total Calibration Uncertainty ($LOOP_{A\text{-}CAL}$)

The total loop uncertainty is the SRSS combination of all uncertainties associated with the loop as seen during calibration (Ref. 3.2.1).

$$LOOP_{A\text{-}CAL} = \pm [(RA_A)^2 + (DR_A)^2 + (CAL_A)^2]^{1/2}$$
$$= \pm [(0.21)^2 + (1.85)^2 + (0.417)^2]^{1/2}$$
$$= \pm 1.91\% \text{ span}$$

7.4.2 $LOOP_B$ (Overpower Low Range Trip)

Loop configuration B includes the following rack components and errors (Sections 1.4, 4.4.2):

NM310 Summing & Level Amplifier (SUM)
NC305 Bistable Relay Driver (BRD)

Reference Accuracy (RA_B)

$RA_{SUM} = \pm 0.2\%$ span
$RA_{BRD} = \pm 0.05\%$ span

$RA_B = \pm(0.2^2 + 0.05^2)^{1/2}$ % span
$= \pm 0.21\%$ span

Temperature Effect (TE_B)

$TE_{SUM} = \pm 0.29\%$ span
$TE_{BRD} = \pm 0.00\%$ span

$TE_B = \pm 0.29\%$ span

Drift Effect (DR_B)

$DR_{SUM} = \pm 1.48\%$ span
$DR_{BRD} = \pm 3.0\%$ span

$DR_B = \pm(1.48^2 + 3.0^2)^{1/2}$ % span
$= \pm 3.35\%$ span

MTE Effect (MTE_B)

Per Section 4.5, the error for the M&TE used to calibrate the channel is:

$MTE_B = \pm 2.93\%$ span

Bistable Setting Tolerance (CAL_B)

Per Section 4.5, the setting tolerance error for the bistable is:

$CAL_B = \pm 0.417\%$ span

Other Effects

All other effects are either negligible or not applicable.

7.5 Channel Error Analysis

7.5.1 Loop Configuration A Channel Uncertainty (Overpower High Range Trip)

PM = ± 4.531% span
PE = ± 0.000% span
$LOOP_A$ = ± 3.51% span

CU_A = $\pm(4.531^2 + 3.51^2)^{1/2}$
= ± 5.732% span
= ± 6.88% RTP

Loop Configuration A Channel Calibration Uncertainty

$LOOP_{A\text{-}CAL}$ = ± 1.91% span

$CU_{A\text{-}CAL}$ = ± $LOOP_{A\text{-}CAL}$
= ± 1.91% span
= ± 2.29% RTP

7.5.2 Loop Configuration B Channel Uncertainty (Overpower Low Range Trip)

PM = ± 4.531% span
PE = ± 0.000% span
$LOOP_B$ = ± 4.49% span

CU_B = $\pm(4.531^2 + 4.49^2)^{1/2}$
= ± 6.379% span
= ± 7.66% RTP

Loop Configuration B Channel Calibration Uncertainty

$LOOP_{B\text{-}CAL}$ = ± 3.39% span

$CU_{B\text{-}CAL}$ = ± $LOOP_{B\text{-}CAL}$
= ± 3.39% span
= ± 4.06% RTP

7.5.3 Loop Configuration D Channel Uncertainty (P-8 Permissive)

PM = ± 4.531% span
PE = ± 0.000% span
$LOOP_D$ = ± 3.77% span

CU_D = $\pm(4.531^2 + 3.77^2)^{1/2}$
= ± 5.895% span
= ± 7.08% RTP

8.0 CALCULATION OF SETPOINTS

8.1 Calculated Setpoints Based on Channel Uncertainties

8.1.1 Power Range High Flux Reactor Trip High Setpoint (Loop A)

Existing Setpoint	= 108.0% RTP	(Ref. 3.1.3)
Analytical Limit (AL)	= 118.0% RTP	(Section 5.2)
Allowable Value (AV)	= ≤109.0% RTP	(Section 5.2)
Channel Uncertainty (CU_A)	= 6.88% RTP	(Section 7.5.1)
Calculated Setpoint (TS_A)	= AL - CU_A = 118.0 - 6.88% RTP = 111.12% RTP	(Ref. 3.2.1)

A positive margin of 3.12% RTP exists between the calculated and existing setpoints. Therefore, the existing setpoint of 108% RTP is acceptable.

8.1.2 Power Range High Flux Reactor Trip Low Setpoint (Loop B)

Existing Setpoint	= 24.0% RTP	(Ref. 3.1.3)
Analytical Limit (AL)	= 35.0% RTP	(Section 5.2)
Allowable Value (AV)	= ≤25.0% RTP	(Section 5.2)
Channel Uncertainty (CU_B)	= 7.66% RTP	(Section 7.5.2)
Calculated Setpoint (TS_B)	= AL - CU_B = 35.0 - 7.66% RTP = 27.34% RTP	(Ref. 3.2.1)

A positive margin of 3.34% RTP exists between the calculated and existing setpoints. Therefore, the existing setpoint of 24% RTP is acceptable.

8.1.3 Permissives P-8 and P-10 Setpoints (Loops D and E)

The P-8 and P-10 setpoints enable or disable various setpoints based on reactor power. The current setpoints are nominal values which are conservative with respect to the values specified by Westinghouse (Ref. 3.2.9). The current P-8 setpoint is 35% RTP, which is less (more conservative) than the Westinghouse PLS setpoint of 50% RTP. The current P-10 setpoint is 9% RTP, which is less than (more conservative) than the Westinghouse PLS setpoint of 10% RTP. No formal setpoints arguments are required for the permissives. Therefore, the current setpoints are acceptable. However, the P10 setpoint and associated manual (operator-actuated) blocks serve to avoid a reactor trip by IR (HI) and PR (LO) during power increases, and automatically unblocks on power decreases. Therefore, it is desirable that the P10 setpoint actuate before the IR (HI) and PR (LO) reactor trip setpoints on power increases and automatically unblock below the trips on power decreases. This calculation will consider the implemented IR (HI) and PR (LO) reactor trip setpoints (nominal 24% RTP), minus an allowance for instrumentation uncertainty associated with the trip setpoint, as the process limit for the P10 setpoint.

9.0 CALCULATION OF ALLOWABLE VALUES

9.1 Calculated Allowable Values Based on Channel Calibration Uncertainties

Of the various functions and outputs associated with the Power Range Nuclear Instrumentation System, only the Power Range High Flux Reactor Trip (High and Low) and the Overtemperature ΔT trip have allowable values listed in the Improved Technical Specifications (Ref. 3.2.44, Table 3.3.1-1). The OTΔT trip is adequately addressed in Reference 3.2.18, including consideration of the allowable value, and therefore will not be addressed further in this calculation. Additionally, no allowable values will be considered for those functions not listed in the Technical Specifications.

9.1.1 Power Range High Flux Reactor Trip High Setpoint (Loop A)

Existing Setpoint	= 108.0% RTP	(Ref. 3.1.3)
Analytical Limit (AL)	= 118.0% RTP	(Section 5.2)
TS Allowable Value (AV)	= ≤109.0% RTP	(Section 5.2)
Calibration Uncertainty ($CU_{A\text{-}CAL}$)	= 1.59% RTP	(Section 7.5.1)
Calculated AV_A	$= TS_A + CU_{A\text{-}CAL}$ = 112.09 + 2.29% RTP = 114.38% RTP	(Ref. 3.2.1)

A positive margin of 5.38% RTP exists between the calculated and Technical Specification Allowable Value. Therefore, the Technical Specification Allowable Value of ≤109.0% RTP is acceptable.

9.1.2 Power Range High Flux Reactor Trip Low Setpoint (Loop B)

Existing Setpoint	= 24.0% RTP	(Ref. 3.1.3)
Analytical Limit (AL)	= 35.0% RTP	(Section 5.2)
TS Allowable Value (AV)	= ≤25.0% RTP	(Section 5.2)
Calibration Uncertainty ($CU_{B\text{-}CAL}$)	= 1.59% RTP	(Section 7.5.2)
Calculated AV_B	$= TS_B + CU_{B\text{-}CAL}$ = 29.19 + 4.06% RTP = 33.25% RTP	(Ref. 3.2.1)

A positive margin of 8.25% RTP exists between the calculated and Technical Specification Allowable Values. Therefore, the Technical Specification Allowable Value of ≤25.0% RTP is acceptable.

11.0 SUMMARY

11.1 Setpoints

All existing NIS Power Range setpoints are considered acceptable with respect to their calculated setpoints with the exception of the P-10 permissive setpoint. **The margin between the P-10 permissive setpoint (9% RTP) and the Intermediate Range Reactor Trip (III) setpoint (24% RTP) is insufficient to state with certainty that the setpoints will not overlap.** The following table summarizes the setpoint parameters. These values pertain to normal conditions only.

Setpoint	Loop	Existing Setpoint	Calculated Setpoint	Existing Allowable Value	Calculated Allowable Value
		% RTP	% RTP	% RTP	% RTP
Overpower Trip High	A	108	111.12	109	114.38
Overpower Trip Low	B	24	27.34	25	33.25
P-8	D	35	N/A	N/A	N/A
P-10	E	9	20.88 / 8.2	N/A	N/A
Overpower Rod Stop	F	106	106.04	N/A	N/A

OVERPOWER AND OVERTEMPERATURE DELTA T REACTOR TRIP SETPOINTS

5.2 Block Diagram

Uncertainty Allowances To Address;
(1) Process Measurement Effect
(2) Equipment Uncertainties
(3) Calibration Uncertainties
(4) Other Uncertainties

The following block diagram is typical for Reactor Coolant Temperature loops T-421, T-431, T-441, Pressurizer Pressure loops P-456, P-457 and P-474 and Nuclear Power Range channels N42, N43 and N44. (Ref. 3.4.5)

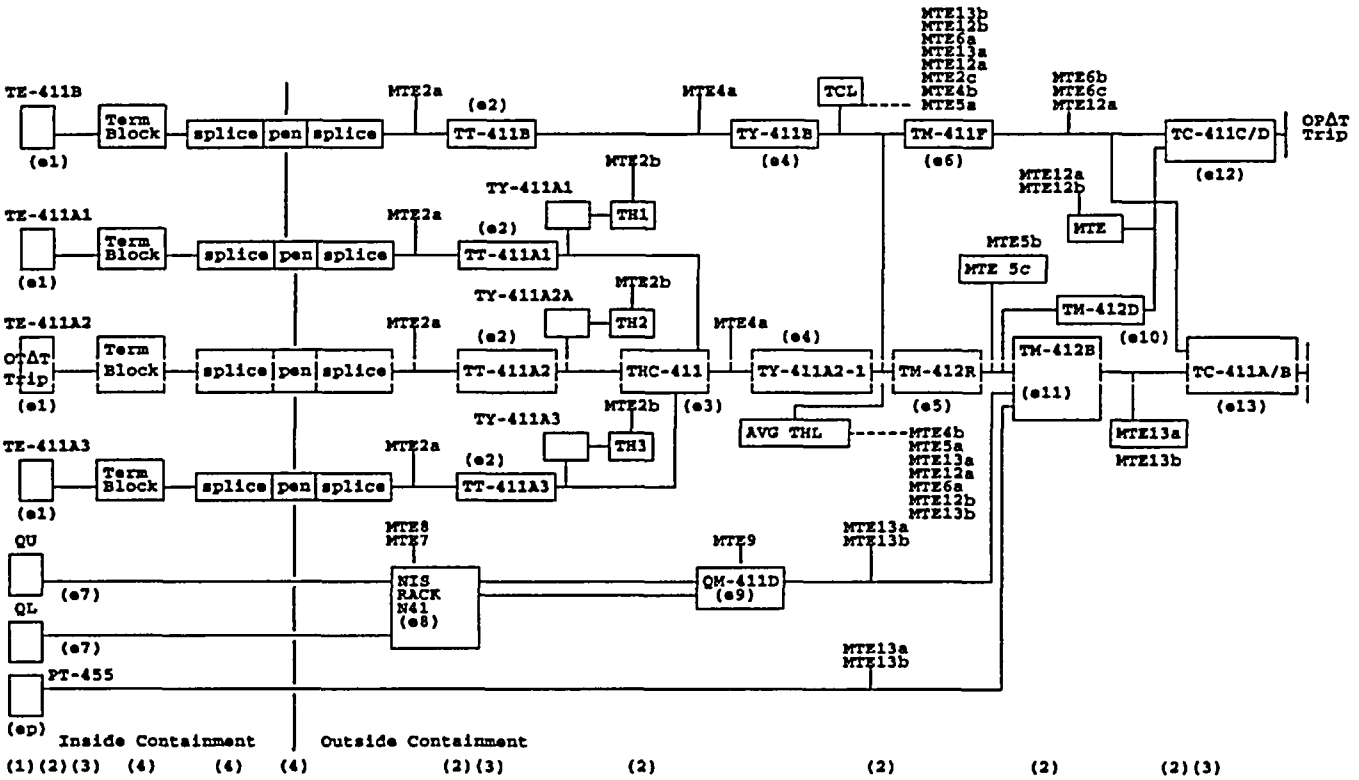

7.17 Calculate Total OPΔT Channel Uncertainty ($CU_{OP\Delta T}$)

The total OPΔT channel uncertainty ($CU_{OP\Delta T}$) is determined from the following;

$$CU_{OPDT} = \pm [PM^2 + e^2_1 + e^2_2 + e^2_3 + e^2_4 + e^2_5 + e^2_6 + PM^2_{cal} + e^2_{10} + e^2_{12}]^{1/2} \pm B$$

The above combination of terms $[PM^2 + e_1^2 + e_2^2 + e_3^2 + e_4^2]$ represents the total channel uncertainties of both the T_{avg} and ΔT portions of the hot and cold leg temperature circuits. Therefore, replacing this term with CU_{Tavg} and $CU_{\Delta T}$, $CU_{OP\Delta T}$ becomes;

$$CU_{OPDT} = \pm [(CU_{Tavg}*K_6)^2 + CU^2_{\Delta T} + e^2_5 + e^2_6 + PM^2_{cal} + e^2_{10} + e^2_{12}]^{1/2} \pm B(T_{avg}*K_6, \Delta T, IRE_{Tavg}*K_6, IRE_{\Delta T})$$

Where,	CU_{Tavg}	=	±1.633%, - 0.5%(PM_1) Bias of T_{avg} Span	(Sect. 7.16.3 & 7.1.1)
	$CU_{\Delta T}$	=	±3.267%, - 1.0%(PM_1) Bias of ΔT Span	(Sect. 7.16.4 & 7.1.1)
	e_5	=	±1.654% of ΔT Span	(Sect. 7.7.11)
	e_6	=	±1.765% of ΔT Span	(Sect. 7.7.12)
	e_{10}	=	±1.000% of ΔT Span	(Sect. 7.12.4)
	e_{12}	=	±0.941% of ΔT Span	(Sect. 7.14.11)
	EA_{IRE}	=	IRE_{Tavg} = - 0.477% Bias of ΔT Span	(Sect.7.15)
		=	$IRE_{\Delta T}$ = - 0.613% Bias of ΔT Span	(Sect. 7.15)
	K_6	=	0.0015 ΔT Span/°F T_{avg}	(Ref. 3.3.4 & Sect. 4.1)
	PM_{cal}	=	± 0.907% of ΔT Span	(Sect. 7.1.2)

$$CU_{OPDT} = \pm [(1.633*.0015)^2 + 3.267^2 + 1.654^2 + 1.765^2 + 0.94^2 + 1.00^2 + 0.907^2]^{1/2} (-0.5*0.0015), -1.0, (-0.477*0.0015), -0.613$$

$CU_{OP\Delta T}$ = ± 4.385%, -1.614% ΔT Span

$CU_{OP\Delta T}$ = + 4.358%, - 5.999% ΔT Span (the higher negative uncertainty will be used to determine the OPΔT setpoint)

7.18 Calculate Total OTΔT Channel Uncertainty ($CU_{OT\Delta T}$)

The total OTΔT channel uncertainty ($CU_{OT\Delta T}$) is determined from the following;

$$CU_{OTDT} = [PM^2 + PE^2 + e^2_1 + e^2_2 + e^2_3 + e^2_4 + e^2_5 + e^2_6 + PM^2_{cal} + e^2_P + PM^2_I + PM^2_{I/e} + e^2_7 + e^2_8 + e^2_9 + e^2_{11} + e^2_{13}]^{1/2} \pm \text{Biases}$$

Similarly to Section 7.17, the CU_{Tavg} and $CU_{\Delta T}$ combination replaces the terms $[PM^2 + PE^2 + e_1^2 + e_2^2 + e_3^2 + e_4^2]$ to obtain a new $CU_{OT\Delta T}$;

$$CU_{OTDT} = [(CU_{Tavg}*K_2)^2 + CU^2_{\Delta T} + e^2_5 + e^2_6 + PM^2_{cal} + (e_P*K_3)^2 + PM^2_I + PM^2_{I/e} + e^2_7 + e^2_8 + e^2_9 + e^2_{11} + e^2_{13}]^{1/2}$$
$\pm$Biases ($T_{avg}*K_2$, ΔT, e_P*K_3)

Where,	CU_{Tavg}	=	±1.633%, - 0.5% Bias of T_{avg} Span	(Sect. 7.16.3 & 7.1.1
	$CU_{\Delta T}$	=	±3.267%, - 1.0% Bias of ΔT Span	(Sect. 7.16.4 & 7.1.1
	e_5	=	±1.654% of ΔT Span	(Sect. 7.7.11
	e_6	=	±1.765% of ΔT Span	(Sect. 7.7.12
	PM_{cal}	=	±0.907% of ΔT Span	(Sect. 7.1.2
	e_P	=	±18.69 PSI, +2.4PSI Bias	(Sect. 7.8.3
	PM_I	=	±3.744% of ΔT Span	(Sect. 7.9.1
	$PM_{I/e}$	=	±8.645% of ΔT Span	(Sect. 7.9.1
	e_7	=	±5.184% of ΔT Span	(Sect. 7.9.2.2
	e_8	=	±2.45% of ΔT Span	(Sect. 7.10.4
	e_9	=	±0.978% of ΔT Span	(Sect. 7.11.4
	e_{11}	=	±1.000% of ΔT Span	(Sect. 7.13.4
	e_{13}	=	±0.952% of ΔT Span	(Sect. 7.14.12
	K_2	=	0.022 ΔT Span/°F T_{avg}	(Ref. 3.3.4 & Sect. 4.2
	K_3	=	0.0007 ΔT Span/ PSI	(Ref. 3.3.4 & Sect. 4.2
	$CU_{OT\Delta T}$	= ±11.909, -1.01268		
	$CU_{OT\Delta T}$	= +11.909%, -12.922% of ΔT Span		

9.0 DETERMINE SETPOINT (TS)

The nominal trip setpoint can be calculated from the following equation;

TS = AL ± (CU + Margin) (Refs. 3.1.3 & 3.2.1)

If from Assumption 2.4, Margin = 0

9.1 OPΔT (K_4) Trip Setpoint

For OPΔT, the relationship of the Analytical Limit ($K_{4\,(MAX)}$), Trip Setpoint ($K_{4\,(TS)}$) and Channel Uncertainty ($CU_{OP\Delta T}$) is as follows;

$$K_{4\,(max)}\,\Delta T_o - K_{4(TS)}\,\Delta T_o = CU_{OP\Delta T}$$

$$K_{4\,(max)} - K_{4\,(TS)} = \frac{CU_{OP\Delta T}}{\Delta T_o}$$

Solving for the Trip Setpoint ($K_{4(TS)}$)

$$TS = K_{4(TS)} = K_{4\,(max)} - \frac{CU_{OP\Delta T}}{\Delta T_o}$$

From Section 7.17, $CU_{OP\Delta T} = -5.999\ \%\ of\ \Delta T\ Span$

The above OPΔT uncertainty is the instrumentation uncertainty at a condition of measured Full Power ΔT (equaling 75°F, or 100% of Span). However, IP3's full power ΔT will be assumed to be 54°F, which is a bounding lowest loop measured ΔT compared to a ΔT calibrated Span of 75°F. The following may be determined for; (Ref. 3.5.12)

$\frac{CU_{OP\Delta T}}{\Delta T_o}$ (Refs. 3.2.22 & 3.2.23)

Given, ΔT_o = ΔT at 100% Full Power

ΔT Span = (75/54) * 100 ΔT_o = 138.888% of ΔT_o

$$\frac{CU_{OP\Delta T}}{\Delta T_o} = -\frac{(5.999\%\ of\ \Delta T\ Span)*(138.888\%\ Full\ Power)}{(100\%\ Full\ Power)*(100\%\ \Delta T\ Span)}$$

$$\frac{CU_{OP\Delta T}}{\Delta T_o} = -0.0833$$

The negative value of $\frac{CU_{OP\Delta T}}{\Delta T_o}$ is used to determine TS since the process is increasing towards the analytical limit. Therefore, calculating the trip setpoint for OPΔT; (Ref. 3.1.3)

$$TS_{(OP\Delta T)} = AL - \frac{CU_{OP\Delta T}}{\Delta T_o}$$

$TS_{(OP\Delta T)}$ = 1.164 - 0.0833 (Refs. 3.2.13 & 3.2.26)

$TS_{(OP\Delta T)}$ = 1.0807 (OPΔT)

9.2 OTΔT (K_1) Trip Setpoint

For OTΔT, the relationship of Analytical Limit (K_{1max}), Trip Setpoint (K_{1TS}) and Channel Uncertainty ($CU_{OT\Delta T}$) are as follows;

$$K_{1(max)}\,\Delta T_o - K_{1(TS)}\,\Delta T_o = CU_{OT\Delta T}$$

$$K_{1(max)} - K_{1(TS)} = \frac{CU_{OT\Delta T}}{\Delta T_o}$$

Solving for the Trip Setpoint ($K_{1(TS)}$),

$$TS = K_{1(TS)} = K_{1(max)} - \frac{CU_{OT\Delta T}}{\Delta T_o}$$

From Section 7.18,

$$CU_{OT\Delta T} = -12.922\%\ of\ \Delta T\ Span$$

The above OTΔT uncertainty is the instrumentation uncertainty for at a condition of a measured Full Power ΔT equaling 75°F. Similarly to OPΔT, OTΔT is also based on a Full Power Rating of 138.888% for 54°F, which is the lowest loop measured ΔT compared to a ΔT calibrated Span of 75°F.

The following may be determined for; $\frac{CU_{OT\Delta T}}{\Delta T_o}$ (Ref. 3.2.22)

Given, ΔT_o = ΔT at 100% Full Power

ΔT Span = (75/54) * 100 ΔT_o = 138.888% of ΔT_o

$$\frac{CU_{OT\Delta T}}{\Delta T_o} = -\frac{(12.922\%\ of\ \Delta T\ Span)*(138.888\%\ Full\ Power)}{(100\%\ Full\ Power)*(100\%\ \Delta T\ Span)}$$

$$\frac{CU_{OT\Delta T}}{\Delta T_o} = -0.1795$$

Therefore, calculating for the trip setpoint for OTΔT;

TS = 1.42 - 0.1795 (Refs. 3.2.13 & 3.2.26)

TS = 1.241 (OTΔT)

10.0 DETERMINE ALLOWABLE VALUE (AV)

The Allowable Value (AV) can be calculated from the following equation; (Refs. 3.1.3 & 3.2.1)

$$AV = TS \pm CU_{CAL}$$

Where,

TS = Trip Setpoint

CU_{CAL} = Channel Uncertainty (CU) as seen during calibration. Therefore, uncertainties due to a harsh environment, process measurement, or primary element are not considered. For conservatism, only RA, DR and ALT uncertainties are considered. The following use AFT and $e_{n\,CAL}$ interchangeably. CU_{CAL} is based on;

$$CU_{CAL} = \pm\sqrt{e_1 CAL^2 + e_2 CAL^2 \ldots}$$

Where;

$$e_{nCAL} = \pm\sqrt{RA_i^2 + DR_i^2 + ALT_i^2}$$

The AV will be calculated using the SRSS method consistent with the method used for the determination of the trip setpoint. Therefore, a check calculation is not required. (Ref. 3.1.3)

10.1 Determine e_{cal}

10.1.1 Determine AFT_1 (Ref. 3.2.17)

As defined above CU_{CAL} only considers the normal uncertainties as seen during calibration, therefore, the module uncertainty equation e_1 reduces to;

$$AFT_1 = \pm\sqrt{RA_i^2 + DR_i^2 + ALT_i^2 + SH_i^2}$$

The e_1 effects for RA, DR and ALT are substituted in the above equation.

$$AFT_1 = \pm\sqrt{0.03^2 + 0.045^2 + 0.07^2 + 0.0015^2}$$

$$AFT_1 = \pm 0.089\ \%\ of\ Span$$

The calibrated span for e_1 is 30-700°F, therefore;

$$AFT_1 = (\pm 0.089\ \%) * (670°F)$$

$$AFT_1 = \pm 0.592\ °F$$

Converting "°F" to "% of ΔT Span", given ΔT = 75°F;

$$AFT_1 = \pm\frac{0.592}{75} * (100) = \pm 0.790\ \%\ of\ \Delta T\ Span$$

Similarly for modules e_2, e_3, e_4, e_5 and e_6, the uncertainty associated with the module calibration is;

10.1.2 Determine AFT_2,

$$AFT_2 = \pm\sqrt{0.5^2 + 0.41^2 + 0.5^2}$$ (Ref. 3.2.17)

$$AFT_2 = \pm 0.817\ \%\ of\ Span$$

e_2 Calibration Span = 120°F

$$AFT_2 = (\pm 0.817\,\%) * (120\,°F)$$

$$AFT_2 = \pm 0.980\,°F$$

Converting "°F" to "% of ΔT Span", given ΔT = 75°F;

$$AFT_2 = \pm \frac{0.980}{75} * (100) = \pm 1.307\%\ of\ \Delta T\ Span$$

10.1.3 Determine AFT_3 (Refs. 3.2.17 & 3.5.13)

The only microprocessor test requirements are for a software check. Therefore there is no As-Found Tolerance.

Therefore,

$AFT_3 = 0$

10.1.4 Determine AFT_4,

$$AFT_4 = \pm\sqrt{0.5^2 + 0.25^2 + 0.5^2}$$ (Ref. 3.2.17)

$$AFT_4 = \pm 0.75\,\%\ of\ Span$$

e_4 Calibration Span = 120°F

$$AFT_4 = (\pm 0.75\,\%) * (120\,°F)$$

$$AFT_4 = \pm 0.90\,°F$$

Converting "°F" to "% of ΔT Span", given ΔT = 75°F;

$$AFT_4 = \pm \frac{0.90}{75} * (100) = \pm 1.20\,\%\ of\ \Delta T\ Span$$

10.1.5 Determine AFT_5

$$AFT_5 = \pm\sqrt{0.2^2 + 0.65^2 + 0.5^2}\ (8/5)$$ (Sect. 7.7)

$$AFT_5 = 1.350\,\%\ of\ Span$$

e_5 Calibration Span = 75°F

$$AFT_5 = (1.350\,\%) * (75\,°F)$$

$$AFT_5 = \pm 1.013\,°F$$

Converting "°F" to "% of ΔT Span" given ΔT = 75°F,

$$AFT_5 = \pm \frac{01.013}{75} * (100) = \pm 1.350\%\ of\ \Delta T\ Span$$

10.1.6 Determine AFT_6

$$AFT_6 = \pm\sqrt{0.2^2 + 0.65^2 + 0.63^2}\ (8/5)$$ (Sect. 7.7)

$$AFT_6 = \pm 1.483\,\%$$

e_6 Calibration Span = 75°F

$$AFT_6 = (\pm 1.483\,\%) * (75\,°F)$$

$$AFT_6 = \pm 1.112\,°F$$

Converting "°F" to "% of ΔT Span", given ΔT = 75°F;

$$AFT_6 = \pm \frac{1.112}{75} * (100) = \pm 1.483\% \text{ of } \Delta T \text{ Span}$$

10.1.7 Determine AFT_P

$$AFT_P = \pm\sqrt{1.6^2 + 0.5^2} + 0.3 \text{ (Drift Bias)}$$ (Sect. 7.8)

$$AFT_P = \pm 1.676\,\%, +0.3 \text{ of Span}$$

e_p Process Span = 800 PSI

$$AFT_P = \pm (1.676\,\%) * (800) + (0.3\%) * (800)$$

$$AFT_P = \pm 13.408 \text{ P.S.I.}, +2.4 \text{ P.S.I.}$$

10.1.8 Determine AFT_7

The uncertainty for e_7 is a "lumped" term given as 1.5% Power. For purposes of determining an AFT value, we will consider only 1.0% as sensible during calibration. Therefore, AFT will be taken as the following:

AFT = [1.5*54/75]*4.0*1.2

$$AFT_7 = \pm 5.184\% \text{ of } \Delta T \text{ Span}$$ (Sect. 7.9)

10.1.9 Determine AFT_8

$$AFT_8 = \pm\sqrt{0.5^2 + 0.5^2}$$ (Sect. 7.10)

$$AFT_8 = \pm 0.707\,\% \text{ Power}$$

$$AFT_8 = [0.707 * 54/75] * 4.0 * 1.2$$

$$AFT_8 = \pm 2.443\% \text{ of } \Delta T \text{ Span}$$

10.1.10 Determine AFT_9

$$AFT_9 = \pm\sqrt{0.8^2 + 0.8^2}$$ (Sect. 7.11)

$$AFT_9 = \pm 1.131\,\% \text{ Power}$$

$$AFT_9 = [1.131 * 54/75] * 4.0 * 1.2$$

$AFT_9 = \pm 3.910\%$ of ΔT Span

10.1.11 Determine AFT_{10}

$$AFT_{10} = \pm\sqrt{0.866^2 + 0.5^2}$$ (Sect. 7.12)

$$AFT_{10} = \pm 1.0\% \text{ of } \Delta T \text{ Span}$$

10.1.12 Determine AFT_{11}

$$AFT_{11} = \pm\sqrt{0.866^2 + 0.5^2}$$ (Sect. 7.13)

$$AFT_{11} = \pm 1.0\% \text{ of } \Delta T \text{ Span}$$

10.1.13 Determine AFT_{12}

$$AFT_{12} = \pm\sqrt{0.5^2 + 0.2^2 + 0.5^2}$$ (Sect. 7.14)

$$AFT_{12} = \pm 0.735\% \text{ of } \Delta T \text{ Span}$$

10.1.14 Determine AFT_{13}

$$AFT_{13} = \pm\sqrt{0.5^2 + 0.2^2 + 0.5^2}$$ (Sect. 7.14)

$$AFT_{13} = \pm 0.735\% \text{ of } \Delta T \text{ Span}$$

10.2 Determine CU_{CAL} for OPΔT

Given the above CU_{CAL} definition, the channel uncertainty equation for OPΔT from Section 7.17 reduces to;

$$CU_{CAL} = \pm\sqrt{AFT_1^2 + AFT_2^2 + AFT_3^2 + AFT_4^2 + AFT_5^2 + AFT_6^2 + AFT_{10}^2 + AFT_{12}^2} \quad (OP\Delta T)$$

10.2.1 Since CU_{CAL} is a function of the T_{HOT} and T_{COLD} parameters of ΔT, the T, CU_{THOT}, CU_{TCOLD} and CU_{Tavg} equations must be calculated for the calibration portion of the loop. Therefore, solving for T_{CAL};

$$T_{CAL} = \pm\frac{\sqrt{3(AFT_1^2 + AFT_2^2)}}{3}$$

$$T_{CAL} = \pm\frac{\sqrt{3(0.790^2 + 1.307^2)}}{3}$$

$$T_{CAL} = \pm 0.881\% \text{ of } \Delta T \text{ Span}$$

10.2.2 Solving for CU_{THOT} calibration;

$$CU_{THOT}(CAL) = \pm\sqrt{T_{CAL}^2 + AFT_3^2 + AFT_4^2}$$

$$CU_{THOT}(CAL) = \pm\sqrt{0.881^2 + 0.0^2 + 1.20^2}$$

$$CU_{THOT}(CAL) = \pm 1.488\% \text{ of } \Delta T \text{ Span}$$

10.2.3 Solving for CU_{TCOLD} calibration;

$$CU_{TCOLD}(CAL) = \pm\sqrt{T_{CAL}^2 + AFT_2^2 + AFT_4^2}$$

$$CU_{TCOLD}(CAL) = \pm\sqrt{0.881^2 + 1.307^2 + 1.20^2}$$

$$CU_{TCOLD}(CAL) = \pm 1.981\% \text{ of } \Delta T \text{ Span}$$

10.2.4 Solving for CU_{Tavg} calibration;

$$CU_{TAVG}(CAL) = \pm\frac{\sqrt{CU^2_{THOT}(CAL) + CU^2_{TCOLD}(CAL)}}{2}$$

$$CU_{TAVG}(CAL) = \pm\frac{\sqrt{1.488^2 + 1.981^2}}{2}$$

$$CU_{TAVG}(CAL) = \pm 1.238\,\%\ of\ \Delta\ T\ \ Span$$

10.2.5 Solving for CU ΔT calibration ($CU_{\Delta TCAL}$);

$$CU\ \Delta T(CAL) \pm \sqrt{CU^2_{THOT}(CAL) + CU^2_{TCOLD}(CAL)}$$

$$CU_{\Delta T(CAL)} = \pm\sqrt{1.488^2 + 1.981^2}$$

$$CU_{\Delta T(CAL)} = \pm 2.477\,\%\ of\ \Delta\ T\ \ Span$$

10.2.6 The term above $[AFT_1^2 + AFT_2^2 + AFT_3^2 + AFT_4^2]$ represents the total Calibration Uncertainties of T_{avg} and ΔT circuits. Therefore, this term can be replaced with; $[CU^2_{TAVG}(CAL) + CU^2_{\Delta T}(CAL)]$.

$$CU_{CAL(OP\Delta T)} = \pm\sqrt{CU^2_{TAVG}(CAL) + CU^2_{\Delta T}(CAL) + AFT_5^2 + AFT_6^2 + AFT_{10}^2 + AFT_{12}^2}$$

$$CU_{CAL\ (OP\Delta T)} = \pm\sqrt{1.238^2 + 2.477^2 + 1.350^2 + 1.483^2 + 1.00^2 + 0.735^2}$$

$$CU_{CAL\ (OP\Delta T)} = \pm 3.637\%\ of\ \Delta T\ Span$$

10.3 Determine CU_{CAL} for OTΔT

Given the above CU_{CAL} definition, the Channel Uncertainty equation for OTΔT from Section 7.18 reduces to;

$$CU_{CAL} = \pm\sqrt{AFT_1^2 + AFT_2^2 + AFT_3^2 + AFT_4^2 + AFT_5^2 + AFT_6^2 + (AFT_P * K_3)^2 + AFT_7^2 + AFT_8^2 + AFT_9^2 + AFT_{11}^2 + AFT_{13}^2}\ (OT\Delta T)$$

Since $\lfloor AFT_1^2 + AFT_2^2 + AFT_3^2 + AFT_4^2 \rfloor = \lfloor CU^2_{TAVG}(CAL) + CU^2_{DELTAT}(CAL) \rfloor$

$$CU\ CAL(OT\Delta T) = \pm\sqrt{CU^2_{TAVG}(CAL) + CU^2_{\Delta T}(CAL) + AFT_5^2 + AFT_6^2 + (AFT_P * K_3)^2 + AFT_7^2 + AFT_8^2 + AFT_9^2 + AFT_{11}^2 + AFT_{13}^2}$$

$$CU\ CAL\ (OTDT) = \pm[1.238^2 + 2.477^2 + 1.350^2 + 1.483^2 + (13.408*0.0007)^2 + 5.184^2 + 2.443^2 + 3.910^2 + 1.0^2 + 0.735^2]^{1/2} + 2.4*0.0007$$

$$CU_{CAL(OT\Delta T)} = \pm 7.835\,\%\ of\ \Delta T\ Span$$

10.4 OPΔT Allowable Value (AV) Calculation

Calculating for OPΔT (K_4) Allowable Value (AV)

Given,

TS = 1.0807 (Sect. 9.1)

$CU_{CAL\ (OP\Delta T)}$ = ±3.637% of ΔT Span

Using the conversion 1.3888, from Section 7.9.1

$CU_{CAL\ (OP\Delta T)}$ = (±3.637%) * (1.3888)

$CU_{CAL\ (OP\Delta T)}$ = ±5.048% Power

The magnitude of CU_{CAL} is combined with the Trip Setpoint in an appropriate direction to determine AV for an increasing signal.

Therefore,

AV = TS - CU_{CAL}

AV = 1.0807 + 0.0505

AV = 1.131 (OPΔT)

Therefore the allowance for uncertainties between AL and AV is:

1.164 – 1.131 = 0.0328 (OPΔT) See ATTACHMENT 5

10.5 OTΔT Allowable Value (AV) Calculation

Calculating for OTΔT (K_1) Allowable Value (AV)

Given, TS = 1.42 - 0.1795

TS = 1.241 (Sect. 9.2)

$CU_{CAL\ (OT\Delta T)}$ = ±7.835% of ΔT Span

Converting "% of ΔT Span" to a value based on 138.88% full power

$CU_{CAL\ (OT\Delta T)}$ = (±7.835%) * (1.3888)

$CU_{CAL\ (OT\Delta T)}$ = ±10.88% Power

The magnitude of CU_{CAL} is combined with the Trip Setpoint in an appropriate direction to determine AV for an increasing signal. Therefore,

AV = 1.241 + 0.1088

AV = 1.3498 (OTΔT)

Therefore the allowance for uncertainties between AL and AV is:

1.42 – 1.35 = 0.08 (OTΔT) See ATTACHMENT 5

Calculation No. IP3-CALC-RPC-00290	Revision 3	Project: ER No. 04-3-027
Title: Instrument Loop Accuracy / Setpoint Calculation, Overpower Delta-T (OPDT) and Overtemperature Delta-T (OTDT), Reactor Trip		

Allowable value (AV)

1.0 PURPOSE

As describe in ISA-RP67.04.2-2000 and NRC Regulatory Guide 1.105, the relationships between the Safety Limit **(SL)**, Analytical Limit **(AL)**, Trip Setpoint **(TS)**, As-Left Tolerance **(ALT)** and **AV** are shown in figure 1 below. The purpose of the **AV** is to identify a value that, if exceeded, may mean that an instrument has not performed within the assumptions of the calculation. The **AV** is a value that the trip setpoint **(TS)** might have when tested periodically, beyond which the instrument channel should be evaluated for operability, taking into account the setpoint calculation methodology. An "as-found" **TS** within the **AV** ensures that sufficient allocation exists between this actual setpoint and the analytical limit **(AL)** to account for instrument uncertainties, such as design-basis accident temperature and radiation effects or process-dependent effects, that either are not present or are not measured during periodic testing. This will provide assurance that the analytical limit will not be exceeded if the **AV** is satisfied. The **AV** also provides a means to identify unacceptable instrument performance that may require corrective action.

— 25 — ANSI/ISA–S67.04.01–2000

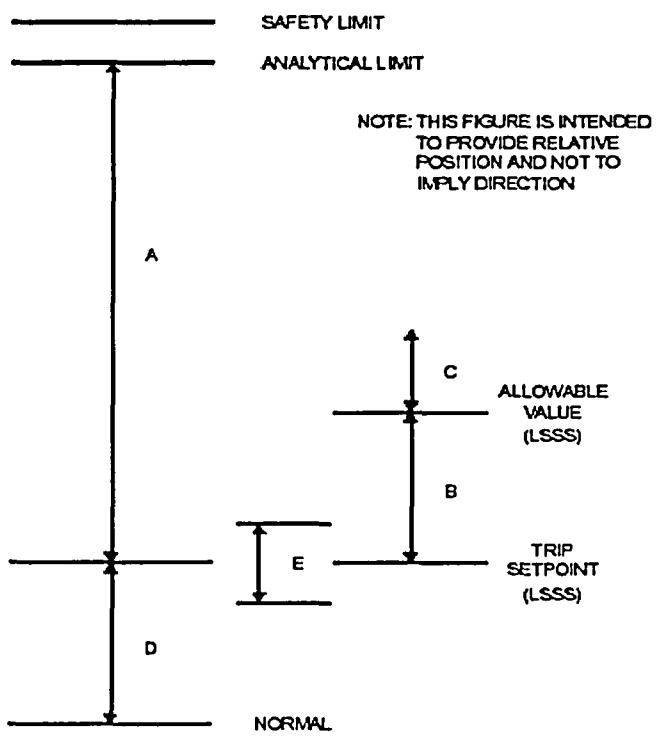

A. ALLOWANCE DESCRIBED IN PARAGRAPH 4.3.1
B. ALLOWANCE DESCRIBED IN PARAGRAPH 4.3.2
C. REGION WHERE CHANNEL MAY BE DETERMINED INOPERABLE
D. PLANT OPERATING MARGIN
E. REGION OF CALIBRATION TOLERANCE (ACCEPTABLE AS LEFT CONDITION) DESCRIBED IN PARAGRAPH 4.3.1

Figure 1 — Nuclear safety-related setpoint relationships

2.0 METHODOLOGIES

Many methods for determining the allowable value have been developed. Any acceptable method shall provide enough allowance between the between the **AL** and **AV** to assure that the **AL** will be protected. Uncertainty values used to determine AV shall be applied consistently in accordance with the methodology to yield a conservative result.

Calculation No. IP3-CALC-RPC-00290 Revision 3 Project: ER No. 04-3-027
Title: Instrument Loop Accuracy / Setpoint Calculation, Overpower Delta-T (OPDT) and Overtemperature Delta-T (OTDT), Reactor Trip

Three methods for determining **AV** are illustrated in figure 6 of ISA-RP67.04.2-2000. For all three methods the uncertainties included in the allowance between **AL** and the **TS**, as a minimum, must include or address as applicable those uncertainties discussed in "A)" and "B)" below. This value is total channel uncertainty (CU). Margin may be added to the CU to increase the allowance between **AL** and the **TS**.

ISA-RP67.04.02-2000 — 52 —

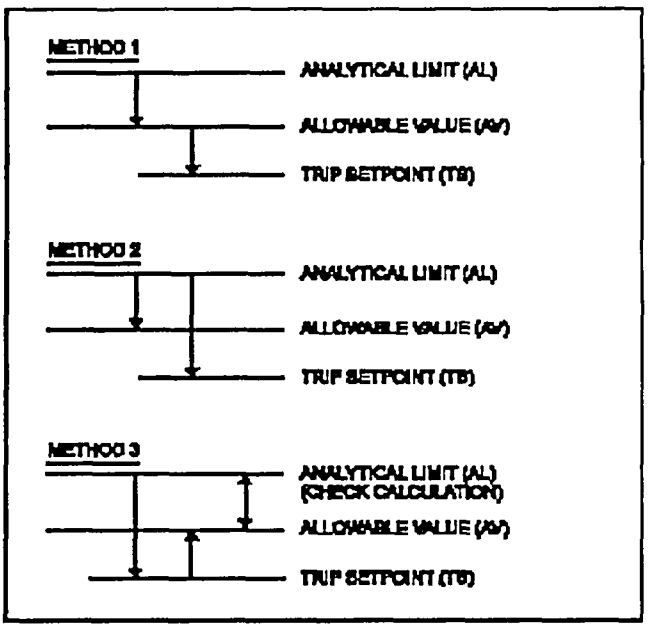

Figure 6 — Methods for determining the allowable value

In figure 6 and the discussion that follows, it is assumed that the process increases toward the **AL**. If the process decreases toward the **AL**, the directions given would be reversed.

In method 1, the **AV** is determined by calculating, in accordance with the setpoint methodology, **uncertainties between the AV and the AL (See "B" below)**. This result is then subtracted from the **AL** to establish the **AV**. For this method the **TS** is then determined by subtracting from the **AV**; margin and those **Uncertainties between the AV and the TS (See "A" below)**.

In method 2, the **AV** is determined by calculating, in accordance with the setpoint methodology, **uncertainties between the AV and the AL (See "B" below)**. **TS** is then determined by subtracting Channel Uncertainty (CU) and margin from the **AL**. **CU** is equal to those **uncertainties between AV and the TS (See "A" below)** and those **Uncertainties between AV and the AL (See "B" below)**.

TS = AL = ± (CU + Margin). Where:
TS = trip setpoint;
AL = analytical limit;
CU = channel uncertainty, including "A" and "B" below.
Margin = an amount chosen, if desired, by the user for conservatism of the trip setpoint.

In method 3, the **TS** is determined by subtracting form the **AL**; margin, those **uncertainties between AV and the TS (See "A" below)** and those **uncertainties between AV and the AL (See "B" below)**. **Again as in method 2, TS = AL ±(CU + margin)**. The method 3 **AV** is established by determining an acceptable allowance based on **uncertainties between AV and the TS**. This allowance is then added to the **TS** to establish a conservative calculated **AV**.

Calculation No. IP3-CALC-RPC-00290	Revision 3	Project: ER No. 04-3-027
Title: Instrument Loop Accuracy / Setpoint Calculation, Overpower Delta-T (OPDT) and Overtemperature Delta-T (OTDT), Reactor Trip		

For method 3 excluding any of the uncertainties identified in "A" below, when determining the Technical Specification **AV** is conservative since the difference between the **AL** and the Technical Specification **AV** will increase. Thus, decreasing the difference between the **TS** and **AV** results in a smaller allowance for drift for the channel being tested. This smaller allowance for drift increases the probability that a degrading instrument will be identified during periodic surveillance. However, the difference between the **AV** and the **TS** must be at least as large as the calibration tolerance (As-Left Tolerance). At IPEC, method 3 is used and only 1-c, 2-a, and 3 or 1-b, 1-c, 2-a, and 3 (See "A" below) being evaluated to conservatively determine the **AV**. Justification for this practice is based on ISA-RP67.04.02-2000 Annex I (for excerpts see page 4).

Therefore, depending on the setpoint methodology used, the uncertainties included in the allowance between Technical Specification **AV** and **TS**, as a maximum, will include, when applicable, those uncertainties identified in "A)" below for the portion of the instrument channel being tested but as a minimum this allowance must be greater then or equal to "A) 1)-c" below).

A) Uncertainties Between Allowable Value and the Trip Setpoint

The allowance between the **AV** and the **TS** should contain that portion of the instrument channel being tested for the surveillance interval and should account for no more than:

1) Instrument calibration uncertainties caused by the
   - -a) calibration standard,
   - -b) **calibration equipment (MTE)**, or
   - -c) **calibration method / as-left tolerance (ALT).**

2) Instrument uncertainties during normal operation caused by;
   - -a) ***reference accuracy (deadband, linearity, hysteresis, and repeatability),***
   - -b) power supply voltage changes,
   - -c) power supply frequency changes,
   - -d) temperature changes,
   - -e) humidity changes,
   - -f) pressure changes,
   - -g) vibration (in-service),
   - -h) radiation exposure,
   - -i) analog-to digital (A-D) conversion, and
   - -j) digital-to analog (D-A) conversion.

3) Instrument Drift
   Instrument drift used shall be based on the instrument-specific calibration intervals.

B) Uncertainties between the Allowable value and the Analytical Limit

Any other uncertainties will be identified as being between the Allowable Value and the Analytical Limit. The calculation will, when applicable, include or address the following:

1) Instrument uncertainties caused by design-basis events

Note: Only uncertainties specific to the event and required period of service should be used. The use of different uncertainty components for the same process equipment for different events is permitted. Any residual effects of a design-basis event shall also be included. The following are examples of these effects (but are not limited to them):

a) Temperature effects

Note: The uncertainties associated with event-specific temperature profiles shall be used where possible. If these are not available, use the uncertainty associated with the limiting temperature.

b) Radiation effects
Note: The uncertainties associated with event-specific radiation exposure shall be used where possible. If these are not available, use the uncertainty associated with the limiting radiation exposure (including TID and rate effect).

c) Seismic/vibratory effects
Note: The uncertainties associated with safe shutdown or operating basis earthquake shall be used, as appropriate.

2) Process-dependent effects
Note: The determination of the trip setpoint allowance shall account for uncertainties associated with the process variable. Examples are (but not limited to) the effect of fluid stratification on temperature measurements, the effect of changing density on level instruments, and process oscillations or noise.

3) Calculation effects
Note: The determination of the trip setpoint allowance shall account for uncertainties resulting from the use of a mathematical model to calculate a variable from measured process variables. An example is (but is not limited to) the determination of primary side power via the secondary side power calorimetric.

4) Dynamic effects
Note: The behavior of a channel's output as a function of the input with respect to time shall be accounted for, either in the determination of the TS or included in the safety analyses. Normally, these effects are accounted for in the safety analyses.

5) Calibration and installation bias accounting
Note: Any bias of fixed magnitude and known direction due to equipment installation or calibration method shall be either eliminated during calibration or accounted for in the setpoint calculation.

3.0 RECOMMENDATIONS FOR INCLUSION OF INSTRUMENT UNCERTAINTIES DURING NORMAL OPERATION IN THE AV DETERMINATION

For method 3, ISA-S67.04.01-2000 allows the use of instrument calibration uncertainties, instrument uncertainties during normal operation, and instrument drift in the determination of the AV. These uncertainties during normal operation are listed in "A" above. It is not always appropriate to include all of these uncertainties in the allowance between the AV and the TS. The following discussion provides recommendations for their inclusion in the determination of the AV.

AV is a parameter used by the plant to verify channel performance at prescribed surveillance intervals, Therefore, only uncertainties associated with events expected to cause changes that would be discernible during those periodic surveillances (as opposed to cycle recalibrations) should be included in the allowance between the AV the TS.

The following items should be considered when determining whether or not to include the effects of each of these uncertainties in the allowance between the AV and TS.

1). Reference Accuracy – The reference accuracy should be included in the allowance between the AV and TS. The reference accuracy of various devices should be combined in the sane fashion when determining AV as when the total CU was determined.

2). Power Supply Voltage and Frequency Changes – These may be included if it is determined that their effects are significant and are likely to be observed. Typically, however, these effects are small and are not usually measured, in which case, their inclusion in AV may be non-conservative.

3). Temperature Changes – If the temperature change expected between periodic surveillances has an uncertainty that is significant, it may be included in the allowance between the AV and TS. If the temperature at the time of surveillance is expected to be relatively constant with respect to the temperature change assumed in the setpoint calculation, the uncertainty due to temperature changes should not be included in this allowance.

4). Humidity Changes – If the humidity change expected between periodic surveillances has an uncertainty that is significant, it may be included in the allowance between the AV and TS. If the humidity at the time of surveillance is expected to be relatively constant with respect to the humidity change assumed in the setpoint calculation, the uncertainty due to humidity changes should not be included in this allowance. Typically Instrumentation constructed of non-organic components and EQ instrumentation (i.e., electronic instrumentation and switches with metallic, rubber, plastic sensing elements) are unaffected by normal changes in ambient humidity. For the purpose of this methodology, Humidity Effects (HE), during normal plant operation, may be considered to be indistinguishable from drift. It is assumed that any effect would be calibrated out on a periodic basis.

5). Pressure Changes – If the pressure change is expected between periodic surveillances has an uncertainty that is significant, it may be included in the allowance between the AV and TS. If the pressure at the time of surveillance is expected relatively constant with respect to the pressure change assumed in the setpoint calculation, the uncertainty due to pressure changes should not be included in this allowance.

6). Vibration – Effects due to the in-service vibration, if expected to be significant between periodic surveillances, may be considered for inclusion in the allowance between the AV and TS. Effects of seismic vibration should not be included since this is not a normal occurrence between periodic surveillances. It is assumed, that when properly installed, the effects on plant instrumentation resulting from exposure to normal vibration levels, are calibrated out on a periodic basis, are not cumulative and, therefore, by engineering judgment are considered to be negligible.

7). Radiation Exposure – Effects due to radiation exposure during normal operation, if expected to be significant between periodic surveillances, may be considered for inclusion in the allowance between the AV and TS. It is assumed, that when properly installed, the effects on plant instrumentation resulting from exposure to normal radiation levels from calibration to calibration are calibrated out on a periodic basis, are not cumulative and, therefore, by engineering judgment are considered to be negligible.

8). Analog-to-Digital Conversion – If analog-to-digital conversion is part of the "tested" portion of the channel, uncertainties due to the A/D conversion should be included in the allowance between the AV and the TS.

At Indian Point Unit 3, **AV** and the **TS** are determined as discussed above for Method 3. For each **AL** relate loop component; the Component Reference Accuracy (RA), Drift (DR) and the As-Left Tolerance (ALT) are combined using SRSS. This value for each component is the As-Found Tolerance (AFT). The AFT is the maximum value that may be used in the surveillance or calibration procedure for the component. The AFT for each **AL** related loop component is then combined using SRSS. This value is then added to the **TS** to establish the **AV**.

Method 2 will be used below to evaluate the adequacy of the **AV** documented in calculation IP3-CALC-ESS-00290. In the method 2 below, "U_{TOTAL}", will represent the total uncertainty that will be combined with the **AL** to determine **AV**. U_N will be determined for each module; these values will be combined using SRSS and will be combined with any applicable bias to determine U_{TOTAL}. $AV = AL \pm (U_{TOTAL})$

Calculation No. IP3-CALC-RPC-00290 Revision 3 Project: ER No. 04-3-027
Title: Instrument Loop Accuracy / Setpoint Calculation, Overpower Delta-T (OPDT) and Overtemperature Delta-T (OTDT), Reactor Trip

4.0 IP3-CALC-RPC-00290 Uncertainties between the Allowable value and the Analytical Limit (AV/AL)

1) Instrument uncertainties caused by design-basis events
Note: Only uncertainties specific to the event and required period of service should be used. The use of different uncertainty components for the same process equipment for different events is permitted. Any residual effects of a design-basis event shall also be included. The following are examples of these effects (but are not limited to them):

a) Temperature effects
Note: The uncertainties associated with event-specific temperature profiles shall be used where possible. If these are not available, use the uncertainty associated with the limiting temperature. It should be noted that the value of Normal Temperature effect is include in the uncertainty value between the AV and the TS. Therefore for Method 2, the Normal Temperature effect will be subtracted from the Accident Temperature effect to determine the value applicable for the zone between the of the AV and the AL.

Module 1, $\pm U_{NTE1} = TE_{1accident} - TE_{1normal}$ (Ref IP3-CALC-ESS-00281, 7.3.3)
Module 1, $\pm U_{NTE1}$ = 0.0096% of span – 0.0% of span
Module 1, $\pm U_{NTE1}$ = ±0.0096% of span (±.0.0096% X 670°F = ±0.06432°F)
Module 1, $\pm U_{NTE1}$ = ±0.06432°F ACCIDENT & (0.00°F NORMAL, Located in zone between AV and TS, See 3.3 above)

Module 2, $\pm U_{NTE2} = TE_{2accident} - TE_{2normal}$ (Ref IP3-CALC-ESS-00281, 7.4.3)
Module 2, $\pm U_{NTE2}$ = 0.58% of span – 0.27% of span
Module 2, $\pm U_{NTE2}$ = ±0.31% of span (± .0.31% X 120°F = ±0.372°F ACC)
Module 2, $\pm U_{NTE2}$ = ±0.372°F ACCIDENT & (0.00°F NORMAL, See 3.3 above)

Module 3, $\pm U_{NTE3} = TE_{3accident} - TE_{3normal}$ (Ref IP3-CALC-ESS-00281, 7.5.3)
Module 3, $\pm U_{NTE3}$ = 0.0% of span – 0.0% of span
Module 3, $\pm U_{NTE3}$ = 0.0% of span
Module 3, $\pm U_{NTE3}$ = 0.00°F ACCIDENT & (0.00°F NORMAL, See 3.3 above)

Module 4, $\pm U_{NTE4} = TE_{4accident} - TE_{4normal}$ (Ref IP3-CALC-ESS-00281, 7.6.3)
Module 4, $\pm U_{NTE4}$ = 0.52% of span – 0.243% of span
Module 4, $\pm U_{NTE4}$ = ±0.277% of span (±0.227% X 120°F = ±0.3324°F)
Module 4, $\pm U_{NTE4}$ = ±0.3324 ACCIDENT & (0.00°F NORMAL, See 3.3 above)

Module 5, $\pm U_{NTE5} = TE_{5accident} - TE_{5normal}$ (Ref IP3-CALC-ESS-00281, 7.7.3)
Module 5, $\pm U_{NTE5}$ = 0.65% of span – 0.30% of span
Module 5, $\pm U_{NTE5}$ = ±0.35% of span (±.0.35% X 75°F = ±0.2625°F)
Module 5, $\pm U_{NTE5}$ = ±0.2625°F ACCIDENT & (0.00°F NORMAL, See 3.3 above)

Module 6, $\pm U_{NTE6} = TE_{6accident} - TE_{6normal}$ (Ref IP3-CALC-ESS-00281, 7.8.3)
Module 6, $\pm U_{NTE6}$ = 0.52% of span – 0.243% of span
Module 6, $\pm U_{NTE6}$ = ±0.277% of span (±0.277% X 75°F = ±0.20775°F)
Module 6, $\pm U_{NTE6}$ = ±0.20775 ACCIDENT & (0.00°F NORMAL, See 3.3 above)

PZR XMTR, $\pm U_{NTEXTR}$ = 0.0 Not Applicable (Considered Normal Only) (Ref IP3-CALC-RPC-00290, 7.8.3)
Module 7, $\pm U_{NTE7}$ = 0.0 Not Applicable (Considered Normal Only) (Ref IP3-CALC-RPC-00290, 7.9.2)
Module 8, $\pm U_{NTE8}$ = 0.0 Not Applicable (Considered Normal Only) (Ref IP3-CALC-RPC-00290, 7.10.4)
Module 9, $\pm U_{NTE9}$ = 0.0 Not Applicable (Considered Normal Only) (Ref IP3-CALC-RPC-00290, 7.11.4)
Module 10, $\pm U_{NTE10}$ = 0.0 Not Applicable (Considered Normal Only) (Ref IP3-CALC-RPC-00290, 7.12.4)
Module 11, $\pm U_{NTE11}$ = 0.0 Not Applicable (Considered Normal Only) (Ref IP3-CALC-RPC-00290, 7.13.4)
Module 12, $\pm U_{NTE12}$ = 0.0 Not Applicable (Considered Normal Only) (Ref IP3-CALC-RPC-00290, 7.9.2)
Module 13, $\pm U_{NTE13}$ = 0.0 Not Applicable (Considered Normal Only) (Ref IP3-CALC-RPC-00290, 7.9.2)

Calculation No. IP3-CALC-RPC-00290 Revision 3 Project: ER No. 04-3-027
Title: Instrument Loop Accuracy / Setpoint Calculation, Overpower Delta-T (OPDT) and Overtemperature Delta-T (OTDT), Reactor Trip

b) Radiation effects

Note: The uncertainties associated with event-specific radiation exposure shall be used where possible. If these are not available, use the uncertainty associated with the limiting radiation exposure (including TID and rate effect).

Module 1, $\pm U_{NRE1}$ =0.0% Not Applicable (Considered Normal Only)	(Ref IP3-CALC-ESS-00281, 7.3.4)
Module 2, $\pm U_{NRE2}$ =0.0% Not Applicable (Considered Normal Only)	(Ref IP3-CALC-ESS-00281, 7.4.4)
Module 3, $\pm U_{NRE3}$ =0.0% Not Applicable (Considered Normal Only)	(Ref IP3-CALC-ESS-00281, 7.5.4)
Module 4, $\pm U_{NRE4}$ =0.0% Not Applicable (Considered Normal Only)	(Ref IP3-CALC-ESS-00281, 7.6.4)
Module 5, $\pm U_{NRE5}$ =0.0% Not Applicable (Considered Normal Only)	(Ref IP3-CALC-ESS-00281, 7.7.4)
Module 6, $\pm U_{NRE6}$ =0.0% Not Applicable (Considered Normal Only)	(Ref IP3-CALC-ESS-00281, 7.8.4)
PZR XMTR, $\pm U_{NREXTR}$ = 0.0% Not Applicable (Considered Normal Only)	(Ref IP3-CALC-RPC-00290, 7.8.3)
Module 7, $\pm U_{NRE7}$ = 0.0% Not Applicable (Considered Normal Only)	(Ref IP3-CALC-ESS-00281, 7.5.3)
Module 8, $\pm U_{NRE8}$ = 0.0% Not Applicable (Considered Normal Only)	(Ref IP3-CALC-ESS-00281, 7.5.3)
Module 9, $\pm U_{NRE9}$ = 0.0% Not Applicable (Considered Normal Only)	(Ref IP3-CALC-ESS-00281, 7.5.3)
Module 10, $\pm U_{NRE10}$ =0.0% Not Applicable (Considered Normal Only)	(Ref IP3-CALC-ESS-00281, 7.6.3)
Module 11, $\pm U_{NRE11}$ = 0.0% Not Applicable (Considered Normal Only)	(Ref IP3-CALC-ESS-00281, 7.5.3)
Module 12, $\pm U_{NRE12}$ = 0.0% Not Applicable (Considered Normal Only)	(Ref IP3-CALC-ESS-00281, 7.5.3)
Module 13, $\pm U_{NRE13}$ = 0.0% Not Applicable (Considered Normal Only)	(Ref IP3-CALC-ESS-00281, 7.7.3)

c) Seismic/vibratory effects

Note: The uncertainties associated with safe shutdown or operating basis earthquake shall be used, as appropriate.

Module 1 thru 6, $\pm U_{NSE1\ THRU\ NSE6}$ = 0.0%	(Ref IP3-CALC-ESS-00281, 2.1)
PZR XMTR, $\pm U_{NSEXTR}$ = 0.0%	(Ref IP3-CALC-RPC-00290, 2.1)
Module 7 thru 13, $\pm U_{NSE7\ THRU\ NSE13}$ = 0.0%	(Ref IP3-CALC-RPC-00290, 2.1)

2) Process-dependent effects

Note: The determination of the trip setpoint allowance shall account for uncertainties associated with the process variable. Examples are (but not limited to) the effect of fluid stratification on temperature measurements, the effect of changing density on level instruments, and process oscillations or noise.

Module 1, $\pm U_{NPDE1}$ = 0.0% Not Applicable (Considered Normal Only)	(Ref IP3-CALC-ESS-00281, 7.3.4)
Module 2, $\pm U_{NPDE2}$ = 0.0% Not Applicable (Considered Normal Only)	(Ref IP3-CALC-ESS-00281, 7.4.4)
Module 3, $\pm U_{NPDE3}$ = 0.0% Not Applicable (Considered Normal Only)	(Ref IP3-CALC-ESS-00281, 7.5.4)
Module 4, $\pm U_{NPDE4}$ = 0.0% Not Applicable (Considered Normal Only)	(Ref IP3-CALC-ESS-00281, 7.6.4)
Module 5, $\pm U_{NPDE5}$ = 0.0% Not Applicable (Considered Normal Only)	(Ref IP3-CALC-ESS-00281, 7.7.4)
Module 6, $\pm U_{NPDE6}$ = 0.0% Not Applicable (Considered Normal Only)	(Ref IP3-CALC-ESS-00281, 7.8.4)
PZR XMTR, $\pm U_{NPDEXTR}$ = 0.0% Not Applicable (Considered Normal Only)	(Ref IP3-CALC-RPC-00290, 7.8.3)
Module 7, $\pm U_{NPDE7}$ = 0.0% Not Applicable (Considered Normal Only)	(Ref IP3-CALC-ESS-00281, 7.5.3)
Module 8, $\pm U_{NPDE8}$ = 0.0% Not Applicable (Considered Normal Only)	(Ref IP3-CALC-ESS-00281, 7.5.3)
Module 9, $\pm U_{NPDE9}$ = 0.0% Not Applicable (Considered Normal Only)	(Ref IP3-CALC-ESS-00281, 7.5.3)
Module 10, $\pm U_{NPDE10}$ =0.0% Not Applicable (Considered Normal Only)	(Ref IP3-CALC-ESS-00281, 7.6.3)
Module 11, $\pm U_{NPDE11}$ = 0.0% Not Applicable (Considered Normal Only)	(Ref IP3-CALC-ESS-00281, 7.5.3)
Module 12, $\pm U_{NPDE12}$ = 0.0% Not Applicable (Considered Normal Only)	(Ref IP3-CALC-ESS-00281, 7.5.3)
Module 13, $\pm U_{NPDE13}$ = 0.0% Not Applicable (Considered Normal Only)	(Ref IP3-CALC-ESS-00281, 7.7.3)

PM Hot Leg streaming =$\pm U_{NHOTLEG}$ = ±1.333% of ΔT span	(Ref IP3-CALC-RPC-00290, 7.16.2)
PM Cold Leg streaming =$\pm U_{NCOLDLEG}$ = ±2.25% of ΔT span	(Ref IP3-CALC-RPC-00290, 7.16.2)

PM_{ie} Incore/Excore = $\pm U_{Ni/e}$ = ±8.645% of ΔT span & PM_i Incore Flux Map = $\pm U_{Ni}$ = ±3.744% of ΔT span are related to process measurement accuracy (PMA) and are not considered as completely Process-dependent effects (Ref IP3-CALC-RPC-00290, 7.9.1). For conservatism, 60% of these values will be treated as between the AV and the AL. The

Calculation No. IP3-CALC-RPC-00290 Revision 3 Project: ER No. 04-3-027
Title: Instrument Loop Accuracy / Setpoint Calculation, Overpower Delta-T (OPDT) and Overtemperature Delta-T (OTDT), Reactor Trip

other 40% is treated as uncertainty between the AV and the TS. Half of 60% will be will be Identified as Process dependent effects, and half will be identified as Calculation effects. The other$U_{Ni/e1}$ = ±2.594, U_{Ni1} = ±1.123

3) Calculation effects
Note: The determination of the trip setpoint allowance shall account for uncertainties resulting from the use of a mathematical model to calculate a variable from measured process variables. An example is (but is not limited to) the determination of primary side power via the secondary side power calorimetric.

Secondary Side Calorimetric to Reactor Power = PM_{calc} = ±0.907% of ΔT span (Ref IP3-CALC-RPC-00290, 7.1.2)

$U_{Ni/e2}$ = ±2.594, U_{Ni2} = ±1.123 (See 2) above)

4) Dynamic effects
Note: The behavior of a channel's output as a function of the input with respect to time shall be accounted for, either in the determination of the **TS** or included in the safety analyses.

N/A, These effects are accounted for in the safety analyses for the determination of **AL**.

5) Calibration and installation bias accounting
Note: Any bias of fixed magnitude and known direction due to equipment installation or calibration method shall be either eliminated during calibration or accounted for in the setpoint calculation.

CU ΔT Bias = $U_{N\Delta TCUBIAS}$ = -1.0% of ΔT span (-0.75°F) (Ref IP3-CALC-RPC-00290, 7.16.2)
CU Tavg Bias, = $U_{NTAVCUBIAS}$ = -0.50% of ΔT span (0.375°F) (Ref IP3-CALC-RPC-00290, 7.16.2)
IRE ΔT Bias, = $U_{NTAVEIREBIAS}$ = -0.613% of ΔT span (Ref IP3-CALC-RPC-00290, 7.15)
IRE Tavg Bias = $U_{NTAVIREBIAS}$ = - 0.477% of ΔT span (Ref IP3-CALC-RPC-00290, 7.15)
PZR XMTR, +U_{EPBISA} = +0.3% of Span = 2.4 psi (Ref IP3-CALC-RPC-00290, 7.8.3)

Calculate AV/AL T Hot Channel U (U_{THOT})
To calculate AV/AL U_{THOT}, first the average AV/AL UT_{HOT} uncertainty (TU) must be determined with individual random uncertainties of modules U_{NTE1} and U_{NTE2} propagated through the AV/ALUT_{HOT} circuit using the SRSS as Follows:
$TU = \pm[3(U_{NTE1}^2 + U_{NTE2}^2)]^{1/2} /3$
$TU = \pm[3(0.06432°F^2 + 0.372°F^2)]^{1/2} /3$ for accident
TU = ± 0.21796°F for accident, & 0.00°F for normal

Hot leg and cold leg IRE effects will be included in the overall U uncertainty later

The AV/AL total T_{hot} uncertainty (U_{THOT}) will be determined by including PM, U_{NTE3} and U_{NTE4}
$U_{THOT} = \pm(PM^2 + T^2 + U_{NTE3}^2 + U_{NTE4}^2)]^{1/2}$ ±Bias
$U_{THOT} = \pm(1.00°F^2 + 0.21796°F^2 + 0°F^2 + 0.3324°F^2)^{1/2} \pm 0$
U_{THOT} = ±1.0761°F for accident, and ±1.00°F for normal

Calculate AV/AL T Cold Channel U (U_{TCOLD})
To calculate U_{TCOLD} the random uncertainties of U_{NTE1}+ U_{NTE2} and U_{NTE4} are combined using SRSS U_{NTE2}^2

$U_{TCOLD} = \pm(PM^2 + U_{NTE1}^2 + U_{NTE2}^2)^2 + U_{NTE4}^2)^{1/2}$ ±Bias
$U_{TCOLD} = \pm(0.0^2 + 0.06432°F^2 + 0.372°F^2 + 0.3324°F^2)^{1/2} - 0.75°F$
U_{TCOLD} = 0.503°F, -0.75°F for accident, and +0.00, -0.75°F for normal

Calculate T_{AVG} U Uncertainty (U_{TAVG})
To calculate U_{TAVG} the U_{THOT} and the U_{TCOLD} random uncertainties must be propagated through the UT_{AVG} circuit using SRSS as follows:
$U_{TAVG} = \pm[(U_{HOT}^2 + U_{COLD}^2)^{1/2} \pm B]/2$
$U_{TAVG} = \pm[(1.0761^2 + 0.503^2)^{1/2} - 0.75] /2$
U_{TAVG} = ± 0.5939°F, -0.375°F for accident and ±0.5°F, -0.375°F for normal

Calculation No. IP3-CALC-RPC-00290 Revision 3 Project: ER No. 04-3-027
Title: Instrument Loop Accuracy / Setpoint Calculation, Overpower Delta-T (OPDT) and Overtemperature Delta–T (OTDT), Reactor Trip

Calculate the AV/AL Channel Uncertainty U for IP3-CALC-ESS-00281

To calculate Total U for IP3-CALC-00281 ($U_{TOTAL281}$), modules U_{NTE5} and U_{NTE6} and IRE_{TAVG} of -1.2°F (IRE for accident only) for are combined with U_{TAVG} using SRSS

$U_{TOTAL281} = \pm (U_{TAVG}^2 + U_{NTE5}^2 + U_{NTE6}^2)^{1/2} \pm Bias$
$U_{TOTAL281} = \pm(0.5939°F^2 + 0.2625°F^2 + 0.2077°F^2)^{1/2} +0, -1.2°F, -0.375°F$
$U_{TOTAL281} = \pm 0.68177°F, + 0°F, -1.575°F$
$U_{TOTAL281} = + 0.68177°F, - 2.23677°F$ for accident
$U_{TOTAL281} = + 0.50°F, - 0.875°F$ for normal

The negative uncertainty of accident $U_{TOTAL281}$ will not be used to determine AV for LO T_{AVG} AL of 535°F because the process is decreasing toward the AL

$AV = AL + U_{TOTAL281}$
$AV = 535°F + 0.68177°F$
$AV = 535.68177°F$

NOTE:	TS	= 537.10°F	Ref:	IP3-CALC-ESS-00281 Rev. 2 Sect. 9.1
	METHOD 3 AV	= 535.925°F	Ref:	IP3-CALC-ESS-00281 Rev. 2 Sect. 10.3
	METHOD 2 AV	= 535.68177°F		
	AL	= 535°F	Ref:	IP3-CALC-ESS-00281 Rev. 2 Sect. 8.1

Therefore, Method 3, when applied using the IP3 methodology provides greater assurance that the AL is protected then Method 2.

The positive uncertainty of normal $U_{TOTAL281}$ will not be used to determine AV for HI T_{AVG} AL of 574.8°F because the process is increasing toward the AL

$AV = AL + U_{TOTAL281}$
$AV = 574.8°F - 0.875°F$
$AV = 573.925°F$

NOTE:	AL	= 535°F	Ref:	IP3-CALC-ESS-00281 Rev. 2 Sect. 8.2
	METHOD 2 AV	= 573.925°F		
	METHOD 3 AV	= 573.725°F	Ref:	IP3-CALC-ESS-00281 Rev. 2 Sect. 10.3
	TS	= 572.55°F	Ref:	IP3-CALC-ESS-00281 Rev. 2 Sect. 9.2

Therefore, Method 3, when applied using the IP3 methodology provides greater assurance that the AL is protected then Method 2.

Calculation No. IP3-CALC-RPC-00290 Revision 3 Project: ER No. 04-3-027
Title: Instrument Loop Accuracy / Setpoint Calculation, Overpower Delta-T (OPDT) and Overtemperature Delta-T (OTDT), Reactor Trip

Solving for U T_{avg} and U ΔT Normal

In order to solve for total U for both OPΔT and OTΔT; the following information is extracted from the Lo T_{avg} setpoint calculation. U_{TCOLD} above includes the cold leg gradient (streaming) phenomena, of -0.75°F or -1.0% of ΔT Span. A U_{THOT} streaming PM random effect is also included above;

U_{THOT} = ±1.00°F

U_{TCOLD} = ±0.00°F, -0.75°F

Converting each of the above to "% of ΔT Span" given a ΔT calibration range of 0 to 75°F results in the following;

$U_{THOT} = \pm (1.00\,°F / 75\,°F)^* 100 = \pm 1.33$ % of ΔT Span

$U_{TCOLD} = [(\pm 0.00\,°F, -0.75\,°F) / 75]^* 100 = \pm 0.00, -1.0$ % of ΔT Span

The following represents the total U_{Tavg} uncertainty at the input to module e_5;

$U_{Tavg} = \pm [(U^2_{THOT} + U^2_{TCOLD})^{1/2}]/2$ - Bias/2

$U_{Tavg} = \pm [(1.33^2 + 0.00^2)^{1/2}]/2 - 1.00/2$

$U_{Tavg} = \pm 0.665\%, -0.5\%$ of T_{avg} span

Given the above, the total ΔT channel uncertainty at the input of module e_6 is as follows ($U_{\Delta T}$);

$U_{\Delta T} = \pm [(U^2_{THOT} + U^2_{TCOLD})^{1/2}]$ - Bias

$U_{\Delta T} = \pm [(1.33^2 + 0.00^2)^{1/2}] - 1.0\%$ of ΔT Span

$U_{\Delta T} = \pm 1.33\%, -1.0\%$ of ΔT Span

Calculate AV/AL OPΔT Channel Uncertainty ($U_{OP\Delta T}$)

The total OPΔT channel uncertainty ($U_{OP\Delta T}$) is determined from the following;

$U_{OPDT} = \pm [PM^2 + Ue^2_1 + Ue^2_2 + Ue^2_3 + Ue^2_4 + Ue^2_5 + Ue^2_6 + PM^2_{cal} + Ue^2_{10} + Ue^2_{12}]^{1/2} \pm B$

In the above combination of terms $[PM^2 + Ue^2_1 + Ue^2_2 + Ue^2_3 + Ue^2_4]$ represents the U total channel uncertainties of both the T_{avg} and ΔT portions of the hot and cold leg temperature circuits. Therefore, replacing this term with U_{Tavg} and $U_{\Delta T}$, $U_{OP\Delta T}$ becomes;

$U_{OPDT} = \pm [(U_{Tavg}{}^*K_6)^2 + U^2_{\Delta T} + Ue^2_5 + Ue^2_6 + PM^2_{cal} + e^2_{10} + e^2_{12}]^{1/2} \pm B(T_{avg}{}^*K_6, \Delta T, IRE_{Tavg}{}^*K_6, IRE_{\Delta T})$

Where from above,	U_{Tavg}	=	±0.665%, - 0.5%(PM_1) Bias of T_{avg} Span	
	$U_{\Delta T}$	=	±1.33%, - 1.0%(PM_1) Bias of ΔT Span	
	Ue_5	=	±0.00% of ΔT Span	
	Ue_6	=	±0.00% of ΔT Span	
	Ue_{10}	=	±0.00% of ΔT Span	
	Ue_{12}	=	±0.00% of ΔT Span	
	EA_{IRE}	=	IRE_{Tavg} = - 0.477% Bias of ΔT Span	(Sect. 7.15)
		=	$IRE_{\Delta T}$ = - 0.613% Bias of ΔT Span	(Sect.7.15)
	K_6	=	0.0015 ΔT Span/°F T_{avg} (Ref. 3.3.4 & Sect. 4.1)	
	PM_{cal}	=	± 0.907% of ΔT Span	(Sect. 7.1.2)

$U_{OPDT} = \pm [(0.665^*.0015)^2 + 1.33^2 + 0.00^2 + 0.00^2 + 0.907^2 + 0.00^2 + 0.00^2]^{1/2}$ (-0.5*0.0015), -1.0, (-0.477*0.0015), -0.613

$U_{OP\Delta T}$ = ± 1.610%, -1.614% ΔT Span

$U_{OP\Delta T}$ = + 1.610%, - 3.224% ΔT Span (The process is increasing toward the AL, therefore, the negative uncertainty value will be subtracted from the AL to determine the OPΔT AV)

Determine Allowable Value for OPΔT

Given: OPΔT (K_4) AL = 1.164 OPΔT

$U_{OP\Delta T}$ = + 1.610%, - 3.224% ΔT Span

For OPΔT, the relationship of the AL ($K_{4(MAX)}$), AV ($K_{4(AV)}$), and the AV/AL Channel Uncertainty ($U_{OP\Delta T}$) are as follows;

$K_{4(MAX)}\ \Delta T_O - K_{4(AV)}\ \Delta T_O = U_{OP\Delta T}$

$K_{4(MAX)} - K_{4(AV)} = U_{OP\Delta T} / \Delta T_O$

Solving for the Allowable Value ($K_{4(AV)}$

AV = $K_{4(AV)}$ = $K_{4(MAX)} - (U_{OP\Delta T} / \Delta T_O)$

The above AV/AL OPΔT uncertainty is the instrumentation uncertainty at a condition of measured Full Power ΔT (equaling 75°F, or 100% of Span). However, IP3's full power ΔT will be assumed to be 54°F, which is a bounding lowest loop measured ΔT compared to a ΔT calibrated Span of 75°F. The following may be determined for;

$U_{OP\Delta T} / \Delta T_O$ = ΔT at 100% Full Power

ΔT Span = (75 / 54) X 100 ΔT_O = 138.888% of ΔT_O

$U_{OP\Delta T} / \Delta T_O$ = -[(3.224% of ΔT Span X 138.888% Full Power) / (100% Full Power X 100% ΔT Span)]

$U_{OP\Delta T} / \Delta T_O$ = -0.0448

The negative value of $U_{OP\Delta T} / \Delta T_O$ is used to determine AV since the process is increasing towards the AL. Therefore, calculation the AV for OPΔT;

$AV_{OP\Delta T}$ = AL - $(U_{OP\Delta T} / \Delta T_O)$

$AV_{OP\Delta T}$ = 1.164 – 0.0448

$AV_{OP\Delta T}$ = **1.1192 OPΔT**

NOTE: AL = 1.164 (OPΔT K4)
METHOD 3 AV = 1.131
METHOD 2 AV = 1.119
Tech Spec AV = 1.100
TS (calculated) = 1.0807
TS (implementing) = 1.074

Therefore, Method 2, when applied using the IP3 methodology provides greater assurance that the AL is protected then Method 3.

Calculation No. IP3-CALC-RPC-00290 Revision 3 Project: ER No. 04-3-027
Title: Instrument Loop Accuracy / Setpoint Calculation, Overpower Delta-T (OPDT) and Overtemperature Delta-T (OTDT), Reactor Trip

Calculate AV/AL OTΔT Channel Uncertainty ($U_{OT\Delta T}$)

Similarly to above, the CU_{Tavg} and $CU_{\Delta T}$ combination replaces the terms $[PM^2 + PE^2 + e_1^2 + e_2^2 + e_3^2 + e_4^2]$ to obtain a new $CU_{OT\Delta T}$; the total OTΔT channel uncertainty ($U_{OT\Delta T}$) is determined from the following;

$CU_{OTDT} = [(CU_{Tavg}*K_2)^2 + CU^2_{\Delta T} + e^2_5 + e^2_6 + PM^2_{cal} + (e_P*K_3)^2 + U_{NI1}^2 + U_{NI/E1}^2 + U_{NI2}^2 + U_{NI/E2}^2 + e^2_7 + e^2_8 + e^2_9 + e^2_{11} + e^2_{13}]^{1/2}$
±Biases ($T_{avg}*K_2$, ΔT, e_P*K_3) Where:

$CU_{\Delta T}$	=	±1.33%, - 1.0% Bias of ΔT Span	(Sect. 7.16.4 & 7.1.1)
e_5	=	±0.00% of ΔT Span	(Sect. 7.7.11)
e_6	=	±0.00% of ΔT Span	(Sect. 7.7.12)
PM_{cal}	=	±0.907% of ΔT Span	(Sect. 7.1.2)
e_P	=	±0.00 PSI, +2.4PSI Bias	(Sect. 7.8.3)
U_{NI1}	=	±1.123% of ΔT Span	(See Above)
$U_{NI/E1}$	=	±2.594% of ΔT Span	(See Above)
U_{NI2}	=	±1.123% of ΔT Span	(See Above)
$U_{NI/E2}$	=	±2.594% of ΔT Span	(See Above)
e_7	=	±0.00% of ΔT Span	(Sect. 7.9.2.2)
e_8	=	±0.00% of ΔT Span	(Sect. 7.10.4)
e_9	=	±0.00% of ΔT Span	(Sect. 7.11.4)
e_{11}	=	±0.00% of ΔT Span	(Sect. 7.13.4)
e_{13}	=	±0.00% of ΔT Span	(Sect. 7.14.12)
K_2	=	0.022 ΔT Span/°F T_{avg}	(Ref. 3.3.4 & Sect. 4.2)
K_3	=	0.0007 ΔT Span/ PSI	(Ref. 3.3.4 & Sect. 4.2)

$U_{OPDT} = \pm [(0.665*.022)^2 + 1.33^2 + 0.00^2 + 0.00^2 + 0.907^2 + 0.00^2 + 1.123^2 + 2.594^2 + 1.123^2 + 2.594^2 + 0.00^2 + 0.00^2 + 0.00^2 + 0.00^2 + 0.00^2]^{1/2}$ ± bias (-0.5*0.022), -1.0, (+2.4*0.0007)

$CU_{OT\Delta T}$ = ±4.3095, +0.00168, -1.011

$CU_{OT\Delta T}$ = +4.311%, -5.320% of ΔT Span (The process is increasing toward the AL, therefore, the negative uncertainty value will be subtracted from the AL to determine the OPΔT AV)

Determine Allowable Value for OTΔT

Given: OTΔT (K_1) AL = 1.420 OTΔT

$U_{OT\Delta T}$ = +4.311, - 5.320% ΔT Span

For OTΔT, the relationship of the AL ($K_{1(MAX)}$), AV ($K_{1(AV)}$), and the AV/AL Channel Uncertainty ($U_{OT\Delta T}$) is as follows;

$K_{1(MAX)}\,\Delta T_O - K_{1(AV)}\,\Delta T_O = U_{OT\Delta T}$

$K_{1(MAX)} - K_{1(AV)} = U_{OT\Delta T} / \Delta T_O$

Solving for the Allowable Value ($K_{(AV)}$

AV = $K_{1(AV)}$ = $K_{1(MAX)} - (U_{OT\Delta T} / \Delta T_O)$

The above AV/AL OTΔT uncertainty is the instrumentation uncertainty at a condition of measured Full Power ΔT (equaling 75°F, or 100% of Span). Similar to OPΔT, OTΔT is also based on 138.888% for 54°F, which is a bounding lowest loop measured ΔT compared to a ΔT calibrated Span of 75°F.

Calculation No. IP3-CALC-RPC-00290 Revision 3 Project: ER No. 04-3-027
Title: Instrument Loop Accuracy / Setpoint Calculation, Overpower Delta-T (OPDT) and Overtemperature Delta-T (OTDT), Reactor Trip

The following may be determined for; $U_{OT\Delta T} / \Delta T_O$

ΔT_O = ΔT at 100% Full Power

ΔT Span = (75 / 54) X 100 ΔT_O = 138.888% of ΔT_O

$U_{OT\Delta T} / \Delta T_O$ = -[(5.320% of ΔT Span X 138.888% Full Power) / (100% Full Power X 100% ΔT Span)]

$U_{OT\Delta T} / \Delta T_O$ = -0.0739

The negative value of $U_{OT\Delta T} / \Delta T_O$ is used to determine AV since the process is increasing towards the AL. Therefore, calculation the AV for OTΔT;

$AV_{OT\Delta T}$ = AL - ($U_{OP\Delta T} / \Delta T_O$)

$AV_{OT\Delta T}$ = 1.420 – 0.0739

$AV_{OT\Delta T}$ = **1.346 OTΔT**

NOTE: AL = 1.420 (OTΔT K1)
METHOD 3 AV = 1.3498
METHOD 2 AV = 1.346
Tech Spec AV = 1.260
TS (calculated) = 1.241
TS (implementing) = 1.22

Therefore, Method 2, when applied using the IP3 methodology provides greater assurance that the AL is protected then Method 3.

PRESSURIZER PRESSURE LOW REATOR TRIP AND SI ACTUATION SETPOINTS

5.0 LOOP DIAGRAM (Ref. 3.2.26)

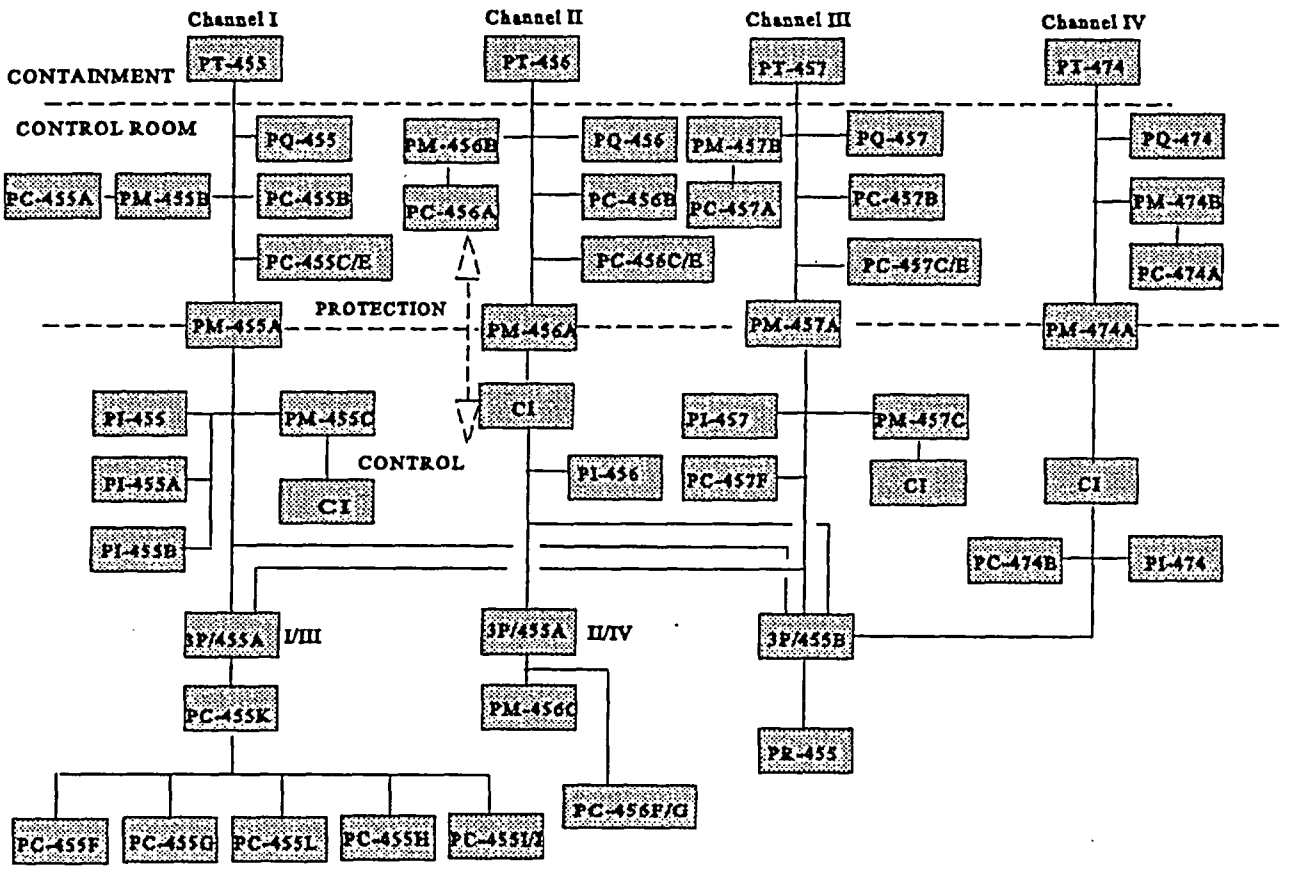

Pressurizer pressure transmitters PT-455, PT-456, PT-457, and PT-474 are mounted on Rack #19, inside containment at the 68' Elevation outside the crane wall (Refs. 3.1.3 and 3.2.27). Pressure indicator PI-455A is mounted on the 18' Elevation of the Aux Building (Ref. 3.1.3) and PI-455 is mounted on the 53' Elevation of the Control Building (Ref. 3.1.3). All other components are mounted inside the Control Room.

5.1 Bistable loops: Low Pressure Reactor Trip (Ref. 3.2.21.1, .2, .3, &.4)
(PTs / e_1 , PMs / e_3 , PCs / e_4)

P-455	P-456	P-457	P-474
PT-455	PT-456	PT-457	PT-474
PM-455B	PM-456B	PM-457B	PM-474B
PC-455A	PC-456A	PC-457A	PC-474A

5.2 Bistable loops: High Pressure Reactor Trip (Ref. 3.2.21.1, .2, .3, &.4)
(PTs / e_1 , PCs / e_4)

P-455	P-456	P-457
PT-455	PT-456	PT-457
PC-455B	PC-456B	PC-457B

5.3 Bistable loops: Low Pressure Safety Injection and Unblock (Ref. 3.2.21.1, .2, .3, &.4)
(PTs / e_1 , PCs / e_4)

P-455	P-456	P-457
PT-455	PT-456	PT-457
PC-455C/E	PC-456C/E	PC-457C/E

5.4 Pressure Indication

The P-455, P-456, P-457 and P-474 loops provide pressurizer pressure indication in the Control Room via pressure indicators and a pressure recorder, and, pressure indication in the PA Building and Aux Building via pressure indicators.

The analysis of the Control Room pressure indicators includes the following loop components: (Ref. 3.2.21.1 & .6)

P-455	P-456	P-457	P-474
PT-455	PT-456	PT-457	PT-474
PQ-455	PQ-456	PQ-457	PQ-474
PM-455A	PM-456A	PM-457A	PM-474A
Selector Switch 3P/455A			
PI-455	PI-456	PI-457	PI-474

The analysis of the PA Building and Aux Building pressure indicators includes the following loop components: (Ref. 3.2.21.1 & .6)

P-455	
PT-455	
PQ-455	
PM-455A	
Selector Switch 3P/455B	
PI-455A	PI-455B

I_t = Minimum Transmitter Current = 10 ma DC (Ref. 3.3.2.1)

X_s = Transmitter Span = 40 ma DC

$$IRE = \frac{86 - (600)(0.01)}{(7.74 \times 10^4 + 600)(0.04)} \times 100$$

$$= \frac{80}{3120}(100)$$

$IRE_{(harsh)}$ = +2.56% of span

IRE is a bias component in the positive direction.

8.4 Bistable loops: Pressurizer Low

Referencing Section 5.1, the loop is comprised of:

P-455	P-456	P-457	P-474
PT-455	PT-456	PT-457	PT-474
PM-455B	PM-456B	PM-457B	PM-474B
PC-455A	PC-456A	PC-457A	PC-474A

The random, independent, and bias uncertainties include: (Assum. 2.25)

PM	= -0.15% of span	(Sect. 8.1.2)
PM	= +0.08% of span	(Sect. 8.1.3)
PE	= 0.00% of span	(Sect. 8.2)
IRE	= +2.56% of span	(Sect. 8.3.2)
e_{1a}	= ±4.99, +0.30, -2.89% of span	(Sect. 8.0)
e_3	= ±0.93%, ±0.30 of span	(Sect. 8.0)
e_4	= ±0.96% of span	(Sect. 8.0)

Solving for CU:

$$CU = \pm\sqrt{4.99^2 + 0.93^2 + 0.96^2} + 0.08 - 0.15 + 0.30 + 2.56, -2.89, \pm 0.30$$

$$= \pm 5.166, +3.54, -3.34\% \ of\ span$$

CU = +8.71, -8.51% of Span

These channels require checking/re-calibration after a seismic event. (Assum. 2.11)

8.5 Bistable loops: Pressurizer High

Referencing Section 5.2, the loop is comprised of:

P-455	P-456	P-457
PT-455	PT-456	PT-457
PC-455B	PC-456B	PC-457B

The random, independent, and bias uncertainties include: (Assum. 2.26)

PM	= 0.00% of span	(Sect. 8.1.1)
PM	= +0.08% of span	(Sect. 8.1.3)
PE	= 0.00% of span	(Sect. 8.2)
IRE	= 0.00% of span	(Sect. 8.3.1)
e_{1n}	= ±2.34, +0.30% of span	(Sect. 8.0)
e_4	= ±0.96% of span	(Sect. 8.0)

Solving for CU:

$$CU = \pm\sqrt{2.34^2 + 0.96^2} + 0.08 + 0.30$$

$$= \pm 2.53, +0.38\% \ of\ span$$

CU = +2.91, -2.53% of Span

These channels require checking/re-calibration after a seismic event. (Assum. 2.11)

8.6 Bistable loops: Safety Injection and Unblock

Referencing Section 5.3, the loop is comprised of:

P-455	P-456	P-457
PT-455	PT-456	PT-457
PC-455C/E	PC-456C/E	PC-457C/E

The random, independent, and bias uncertainties include: (Assum. 2.25)

PM	= 00% of span	(Sect. 8.1.1)
PM	= -0.15% of span	(Sect. 8.1.2)
PM	= +0.08% of span	(Sect. 8.1.3)
PE	= 0.00% of span	(Sect. 8.2)
IRE	= 0.00% of span	(Sect. 8.3.1)
IRE	= +2.56% of span	(Sect. 8.3.2)
e_{1n}	= ±2.34%, +0.30% of span	(Sect. 8.0)
e_{1a}	= ±4.99, +0.30, -2.89% of span	(Sect. 8.0)
e_4	= ±0.96% of span	(Sect. 8.0)

8.6.1 Solving for CU (normal)

$$CU = \pm\sqrt{2.34^2 + 0.96^2} + 0.08 + 0.30$$

$$= \pm 2.53, +0.38\% \ of\ span$$

CU = +2.91, -2.53% of Span

8.6.2 Solving for CU (accident)

$$CU = \pm\sqrt{4.99^2 + 0.96^2} + 0.08 - 0.15 + 0.30 + 2.56 - 2.89$$

$$= \pm 5.08, +2.94, -3.04\% \ of\ span$$

CU = +8.02, -8.12% Span

These channels require checking/re-calibration after a seismic event. (Assum. 2.11)

8.7 Indicator loops

Referencing Section 5.4, the loop is comprised of:

P-455	P-456	P-457	P-474
PT-455	PT-456	PT-457	PT-474
PM-455A	PM-456A	PM-457A	PM-474A
PI-455, A, B	PI-456	PI-457	PI-474

The random, independent, and bias uncertainties include:

PM	= 0.00% of span	(Sect. 8.1.1)
PM	= -0.15% of span	(Sect. 8.1.2)
PM	= +0.08% of span	(Sect. 8.1.3)
PE	= 0.00% of span	(Sect. 8.2)
IRE	= 0.00% of span	(Sect. 8.3.1)
IRE	= +2.56% of span	(Sect. 8.3.2)
e_{1n}	= ±2.34, +0.30% of span	(Sect. 8.0)
e_{1a}	= ±4.99, +0.30, -2.89% of span	(Sect. 8.0)
e_{1pa}	= ±2.17, +0.30, -2.89% of span	(Sect. 8.0)
e_{2n}	= ±1.54% of span	(Sect. 8.0)
e_{2a}	= ±2.04%, of span	(Sect. 8.0)
e_5	= ±2.58% of span	(Sect. 8.0)

8.7.1 Solving for CU (normal)

$$CU = +\sqrt{2.34^2 + 1.54^2 + 2.58^2} + 0.08 + 0.30 - 0.15$$

$$= +3.808, +0.38, -0.15\% \ of\ span$$

CU = +4.19, -3.96% of Span

8.7.2 Solving for CU (accident)

$$CU = \pm\sqrt{4.99^2 + 2.04^2 + 2.58^2} + 0.08 - 0.15 + 0.30 + 2.56 - 2.89$$

$$= \pm 5.976, +2.94, -3.04\% \ of\ span$$

10.0 DETERMINE SETPOINT (TS)

The nominal trip setpoint can be calculated from the following equation:

TS = AL* ± (CU + Margin) (Section 6.4)

From assumption 2.8, Margin = 0, unless otherwise stated

*Note: For the SI Unblock function, AL is substituted by NPL (Nominal Process Limit)

10.1 RPS Low Pressurizer Pressure TS:

The positive value of CU is used to determine TS, since the process is decreasing towards the analytical limit. (Ref. 3.2.1)

CU = 8.71%* (Section 8.4)
8.71% x 800 psi = 69.68 psi

*Note: This percentage uncertainty was developed considering harsh conditions which are prevalent during LOCA events. However, the LBLOCA event does not assume rods drop into the core and thus reactor trip and the effects of environment on the trip function are not relavent. In the case of a SBLOCA the probability of adverse effect on the incontainment pressure transmitters is considered negligible. This contention is supported by the short time frame that the trip function is assumed to occur in (worst case time is 107.68 seconds for 1.5 inch break size) and the low volume blowdowns inherent in these events. The harsh uncertainty will be used, however, to ensure conservatism and preclude the need to separately disposition the conditions of timing and environment posed by the various SBLOCA class breaks. (Ref 3.2.37.6 and 3.2.37.7)

Therefore, TS = 1835.3 psig + 69.68 psi
= 1904.98 psig (RPS Low Pressure Trip)

TS =1904.98 psig

From this value, a bistable surveillance limit will be determined which will be the surveillance procedure acceptance value, beyond which a trip function operability determination will be performed by Design Engineering.

The limit value is calculated in the following mannner:.

TS_{sl} = TS +/- AFT

AFT = 0.73% Span = 5.84 psi (Ref Sect 8.13.2)

TS_{sl} = 1904.98 psig - 5.84 psi

TS_{sl} = **1899.14 psig** = (199.57 mV DC)

Since the above value is below the new ITS AV, the new AV value will also be the bistable surveillance limit.

TS_{sl} = **1900.00 psig** = (200.00 mV DC)

For the purpose of providing setpoint margin and being more closely aligned with the IP2 Nominal Trip Setpoint for this function, a value of 1930 psig will be chosen for implementation.

TS = 1930 psig = (330.00 mvdc)

10.2 RPS High Pressurizer Pressure TS:

The negative value of CU is used to determine TS, since the process is increasing towards the analytical limit. (Ref. 3.2.1)

CU = 2.53%* (Section 8.5)
2.53% * 800 psi = 20.24 psi

*Note: This uncertainty was developed without consideration of harsh environment effects. No harsh conditions are present as a result of the Loss of Electrical Load event. (Ref 3.2.37.1)

Therefore, TS = 2455.3 psig - (20.24 + 49.71) psi [49.71 psi margin]
= 2385.35 psig (RPS High Pressure Trip)

TS = 2385.35 psig

49.71 psi margin is added to provide conservatism and value stability to the ITS AV value in section 11.2.

The actual limiting trip setpoint is:

TS = 2455.3 psig - 20.24 psi = 2435.06 psig

From this value, a bistable surveillance limit will be determined which will be the surveillance procedure acceptance value, beyond which a trip function operability determination will be performed by Design Engineering.

The limiting value is calculated in the following manner:

TS_{sl} = TS +/- AFT

AFT = 0.73% Span = 5.84 psi (Ref Sect 8.13.2)

TS_{sl} = 2435.06 psig + 5.84 psi

TS_{sl} = **2440.9 psig** = (470.45 mV DC)

Since the above value is above the ITS AV, the AV value will also be the bistable surveillance limit.

TS_{sl} = **2400.00 psig** = (450.00 mV DC)

The existing implemented trip setpoint for this function is 2365 psig and as such is conservative relative to the calculated value. Therefore, the implemented setpoint will remain this value.

TS = 2365.00 psig = (432.5 mVDV)

10.3 Low Pressure Safety Injection TS:

The positive value of CU is used to determine TS for a decreasing parameter, since the process is decreasing towards the analytical limit. (Ref. 3.2.1)

CU = 8.02%* [accident uncertainty] (Section 8.6.2)
8.02% * 800 psi = 64.16 psi

*Note: This uncertainty was developed with consideration of harsh environment effects for application to the conditions of the MSLB - Core Response Analysis (CRA).

Therefore:

TS (CRA) = 1634.0 psig + 64.16 psi
= 1698.16 psig

TS =1698.16 psig

From this value, a bistable surveillance limit will be determined which will be the surveillance procedure acceptance value, beyond which a trip function operability determination will be performed by Design Engineering.

The limit value is calculated in the following mannner:

TS_{sl} = TS +/- AFT

AFT = 0.73% Span = 5.84 psi (Ref Sect 8.13.2)

TS_{sl} = 1698.16 psig - 5.84 psi

TS_{sl} = 1692.32 psig = (96.16 mV DC)

Since the above value is below the ITS AV, the AV value will also be the bistable surveillance limit.

TS_{sl} = 1710.00 psig = (105.00 mV DC)

For the purpose of providing setpoint margin and being more closely aligned with the IP2 Nominal Trip Setpoint for this function, a value of 1780 psig will be chosen for implementation.

TS = 1780.00 psig = (140 mVDC)

10.4 Unblock Safety Injection TS:

11.0 ALLOWABLE VALUE (AV)

The Allowable Value (AV) can be determined as follows: (Section 6.6)

$$AV = TS \pm CU_{CAL}$$

$$CU_{CAL} = \pm\sqrt{AFT_{e1}^2 + AFT_{e2}^2 + \ldots\ldots\ldots + AFT_{en}^2} + B$$

Whereas:

TS	=	Trip Setpoint (zero margin)
CU_{CAL}	=	The Channel Uncertainty (CU) as seen during calibration. Therefore, uncertainties due to a harsh environment, process measurement, or primary element are not considered. For conservatism, only RA, DR, and ALT uncertainties are considered.

CU_{CAL} will be calculated using the Square Root Sum of Squares (SRSS) method which is consistent with the method used for the determination of the trip Setpoint. (Section 6.6)

NOTE: The method for AV determination described above is consistent with ISA 67.04 Method 3 (sensed allowances during surveillance subtracted from the limiting Nominal Trip Setpoint)

11.1 RPS Low Pressurizer Pressure AV:

$$CU_{CAL} = \pm\sqrt{AFT_{e1}^2 + AFT_{e3}^2 + AFT_{e4}^2} + B$$

$$= \pm\sqrt{1.68^2 + 0.00^2 + 0.73^2} + 0.3 = +2.131, -1.831$$ (Section 8.13)

TS =1904.98 psig (Section 10.1)
CU_{CAL}= 800.00 psig x (0.02131*) = ±17.05 psi
CU_{CAL}= ±17.05psi

*positive value of CU_{CAL} is subtracted form the Calculated TS for decreasing setpoints

AV = TS - CU_{CAL}
= 1904.98 psig - 17.05 psi
= 1887.93 psig

AV =1888 PSIG

This AV determination will now be repeated using ISA 67.04 Method 2. This alternate process for AV determination is being used for AVs in this calculation which are being changed as part of the SPU LAR submittal to the NRC. For conservatism, all the uncertainty allowances not considered in the Method 3 determination above will now be considered as un-sensed allowances thus computing the most restrictive AV value.

$$AV = AL + CU_{uncal}$$

Where:

AL = 1835.3 psig (Section 9.1)

$$Cu_{uncal} = [\, e^2_{1uncal} + e^2_{3uncal} + e^2_{4uncal} \,]^{1/2} + B$$

$e^2_{1uncal} = (4.60^2 + 0.10^2 + 0.95^2)^{1/2} = 4.69\%$ (Section 7.1)

$e^2_{3uncal} = (0.40^2 + 0.50^2)^{1/2} = 0.64\%$ (Section 7.3)

$e^2_{4uncal} = (0.32^2 + 0.50^2 + 0.15^2)^{1/2} = 0.61\%$ (Section 7.4)

B (cal span error) = 0.08% (Section 8.1.3)
B (IRE) = 2.56% (Section 8.3)

B (THD) = 0.30% (Section 7.3)

$$Cu_{uncal} = [\, 4.69^2 + 0.64^2 + 0.61^2 \,]^{1/2} + 0.08 + 2.56 + 0.30$$

$$= \pm 4.77 + 0.08 + 2.56 + 0.30$$

$$= +7.71\%$$

*positive value of $CUun_{CAL}$ is added to the AL for decreasing setpoints

$$AV = AL + Cu_{uncal}$$

$$= 1835.3 \text{ psig} + (0.0771 \times 800) \text{ psi}$$

$$= 1835.3 \text{ psig} + 61.68 \text{ psi}$$

$$= 1896.98 \text{ psig}$$

This value is more restrictive than the Method 3 value and thus will be used as the basis for the Tech Spec Allowable Value for SPU power levels.

Rounding upwards yields a Human Factored value (with margin) for the Tech Spec of :

AV = ≥ 1900 psig

11.2 RPS High Pressurizer Pressure AV:

The AL and AV for this function are not changing for the SPU LAR submittal and thus only the customary ISA Method 3 process will be used to calculate the loop AV.

$$CU_{CAL} = \pm\sqrt{AFT_{e1}^2 + AFT_{e4}^2} + B$$

$$= \pm\sqrt{1.68^2 + 0.73^2} + 0.3 = +2.131, -1.831$$ (Section 8.13)

TS =2385.35 psig (margin enhanced value)
TS =2435.06 psig (actual calculated limiting setpoint value) (Section 10.2)
CU_{CAL}= 800.00 psig x (0.01831*) = ±14.648 psi
CU_{CAL}= ±14.65 psi

*negative value of CU_{CAL} is added for increasing setpoints

$$AV = TS + CU_{CAL}$$
$$= 2385.35 \text{ psig} + 14.65 \text{ psi}$$
$$= 2400 \text{ psig}$$

AV = 2400 PSIG

The actual calculated AV is the following:

AV = 2435.06 psig + 14.65 psi = 2449.71 psig

11.3 Low Pressurizer Pressure Safety Injection AV:

$$CU_{CAL} = \pm\sqrt{AFT_{e1}^2 + AFT_{e4}^2}$$
$$= \pm\sqrt{1.68^2 + 0.73^2} = \pm 1.831 \qquad \text{(Section 8.13)}$$

TS = 1698.16 psig (Section 10.3)
CU_{CAL} = 800.00 psig x (0.0183) = ±14.64 psi
CU_{CAL} = ±14.64 psi

*positive value of CU_{CAL} is subtracted from the calculated TS for decreasing setpoints

$$AV = TS - CU_{CAL}$$
$$= 1698.16 \text{ psig} - 14.64 \text{ psi}$$
$$= 1683.52 \text{ psig}$$

AV = 1683.52 PSIG

This AV determination will now be repeated using ISA 67.04 Method 2. This alternate process for AV determination is being used for AVs in this calculation which are being changed as part of the SPU LAR submittal to the NRC. For conservatism, all the uncertainty allowances not considered in the Method 3 determination above will now be considered as un-sensed allowances thus computing the most restrictive AV value.

$$AV = AL + CU_{uncal}$$

Where:

AL = 1634.00 psig (Section 9.1)

$$CU_{uncal} = [e^2_{1uncal} + e^2_{4uncal}]^{1/2} + B$$

$$e^2_{1uncal} = (4.60^2 + 0.10^2 + 0.95^2)^{1/2} = 4.69\% \qquad \text{(Section 7.1)}$$

$$e^2_{4uncal} = (0.32^2 + 0.50^2 + 0.15^2)^{1/2} = 0.61\% \qquad \text{(Section 7.4)}$$

B (cal span error) = 0.08% (Section 8.1.3)
B (IRE) = 2.56% (Section 8.3)

B (THD) = 0.30% (Section 7.3)

$$CU_{uncal} = [4.69^2 + 0.61^2]^{1/2} + 0.08 + 2.56 + 0.30$$

$= \pm 4.73 + 0.08 + 2.56 + 0.30$

$= +7.67\%$

The positive value of CU_{uncal} is added to the AL for decreasing setpoints.

$AV = AL + Cu_{uncal}$

$= 1634$ psig + (0..0767 x 800 psi)

$= 1634$ psig + 61.36 psi

$= 1695.36$ psig

This value is more restrictive than the Method 3 value and thus will be used as the basis for the Tech Spec Allowable Value for SPU power levels. However, the AVs calculated by both methods yields values that are below the bottom of scale of the Pressurizer Pressure instrument loops. Since the bottom of scale is 1700 psig, we will arbitrarily choose a value of 1710 psig for the AV. This value is conservative relative to both calculated values and provides significant surveillance margin to the implemented setpoint of 1780 psig. The Tech Spec AV will therefore be the following:

AV = ≥ 1710 psig

11.4 Unblock Safety Injection AV:

The value at which the interlock actuates is not modeled in any of the IP3 Accident Analyses. The IP3 Accident Analyses only assumes that the permissive has activated since the analyses are performed at Reactor Critical / Power conditions. Therefore there is no true Allowable Value. Thus, no value is calculated for this function.

12.0 SCALING

12.1 Calibration Procedures

Referencing the scaling equation from Section 5.11:
(input/input span) x output span + output offset = output

12.1.1 PT-455, PT-456, PT-457 & PT-474

The transmitter span is 1700 to 2500 psig. It is calibrated from 1720 to 2520 psig to account for impulse line static head offset. Rewriting for input in terms of input psig and output in terms of mvdc:

Whereas:
input = 1720.00, 1920.00, 2120.00, 2320.00 & 2520.00 psig
input span = 800.00 psig
output span = 400.00 mvdc
output offset = 100.00 mvdc

(input - bottom of scale psi / 800.00 psi) x 400.00 mvdc + 100.00 mvdc = output in mvdc
Calculating the output for each input:

HIGH STEAM FLOW IN TWO STEAM LINES SAFETY INJECTION ACTUATION

6.0 LOOP (BLOCK) DIAGRAM

6.1 Block Diagram (High Steam Flow Trip) (Refs. 3.2.21 and 3.2.30)

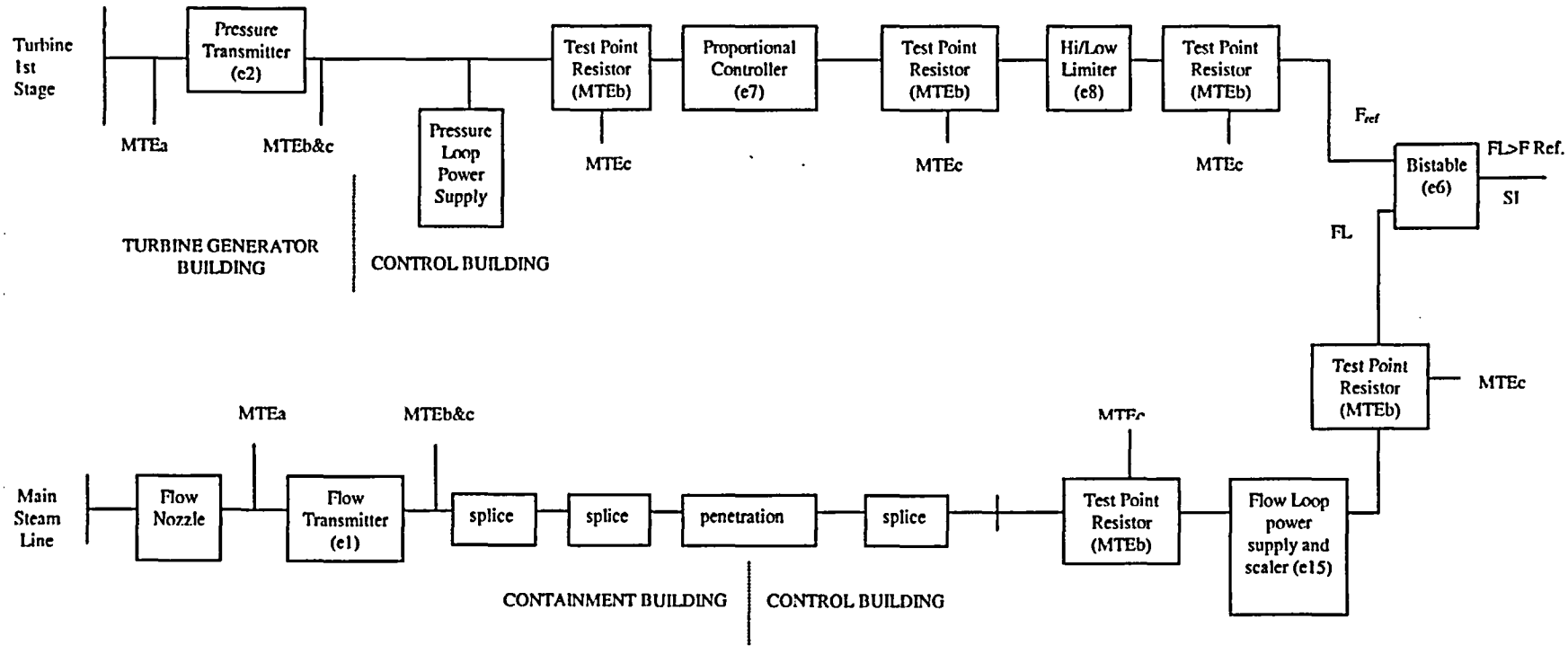

The function that uses the Steam Pressure input is not required to mitigate an accident and therefore per Assumption 2.9:

IRE_{SP} = 0.00% of Span

9.4 High Steam Flow: FC-419A, B, FC-429A, B, FC-439A, B & FC-449A, B

Referencing Section 6.1, the loop is comprised of:

F-419A, B	**F-429A, B**	**F-439A, B**	**F-449A, B**
FT-419A, B	FT-429A, B	FT-439A, B	FT-449A, B
FQ/FM-419A, B	FQ/FM-429A, B	FQ/FM-439A, B	FQ/FM-449A, B
PT-412A, B	PT-412A, B	PT-412A, B	PT-412A, B
PM-412C, D	PM-412C, D	PM-412C, D	PM-412C, D
PM-412F, G	PM-412F, G	PM-412F, G	PM-412F, G
FC-419A, B	FC-429A, B	FC-439A, B	FC-449A, B

The random, independent, and bias uncertainties include:

PM_{SF}	= ±0.50% of Span	(Section 9.1.1)
PM_{TP}	= 0.00% of Span	(Section 9.1.2)
PE_{SF}	= ±0.20% of Span	(Section 9.2.1)
PE_{TP}	= 0.00% of Span	(Section 9.2.2)
IRE_{SF}	= +0.89% of Span	(Section 9.3.2)
IRE_{TP}	= 0.00% of Span	(Section 9.3.3)
e_{1a}	= ±7.83, -2.89% of Span	(Section 9.0)
e_{15}	= ±1.65% of Span	(Section 9.0)
e_2	= ±2.80% of Span	(Section 9.0)
e_7	= ±1.59% of Span	(Section 9.0)
e_8	= ±1.22% of Span	(Section 9.0)
e_6	= ±1.09% of Span	(Section 9.0)

11.0 DETERMINE SETPOINT (TS)

The nominal trip setpoint can be calculated from the following equation:

$$TS = AL \pm (CU + Margin) \qquad \text{(Section 7.4)}$$

11.1 Weight Rate of Flow (PPH) through the flow nozzle is calculated as follows:

The setpoint, given in mA, can best be evaluated by calculating the differential produced by the Flow Nozzle at the corresponding steam flows.

$$PPH = 359.1 \times d^2 \times K \times Y \times Fa \times (\Delta P \times \rho)^{1/2} \qquad \text{(Ref. 3.3.8)}$$

Where: d = 16 in., Throat diameter

k = 1.072 (Sec. 3.1 of Ref. 3.3.8)

Y ~ .99 (0 - 78% Flow), Adiabatic Expansion Factor

~ .975 (100 - 110% Flow) (Fig. 9.2 of Ref. 3.3.8)

Fa ~ 1.0095 (0 - 78% Flow), Thermal Expansion Factor

~ 1.0090 (100 - 110% Flow) (Fig. 9.1 of Ref. 3.3.8)

11.2 Solving for ΔP:

$$\Delta P = (PPH / 359.1 \times 16^2 \times 1.072 \times Y \times Fa)^2 \times (1/\rho)$$

Where ρ is the steam density at upstream conditions.

11.3 Values for Δ P and the corresponding flow transmitter output are tabulated below, as a basis for an evaluation of the high steam flow trip Setpoints:

Steam Flow (%)	Steam Flow (PPH)	Steam Gen. Pressure (PSIA)	Steam Temp. (°F)	Steam Density (lbm/ft^3) (Note 5)	Δ P (inWC) (Note 3)	Steam Flow PIR Module Output (mA) (Note 3)	NOTES
144	5,040,000	-	-	NOTE 1	1601.68	73.38	NPL / AL (100% Load)
138.00	4,830,031			NOTE 1	1471.01	68.21	AV cal (100% Load)
135.68	4,748,960			NOTE 1	1422.04	66.27	TS cal 100% (Sec 11.6.2)
120	4,200,000	-	-	NOTE 1	1112.34	54.02	SPU AV(100% Load)
114.28	4,000,000	-	-	NOTE 1	1010.8	50 (Note 4)	Top of Normal SF Span
110.52	3,868,400			NOTE 1	943.58	47.34	Surv Limit (100%) Implem
110.00	3,850,000	-	-	NOTE 1	934.62	46.98	TS (100%) Implemented For SPU (Ref. 3.2.20.1)
100	3,500,000	770	513.8	1.6873	772.42	40.57	**100% Plant Load**
78	2,730,000	-	-	NOTE 2	335.14	23.26	AL (0-20% Load) (Sec 10.1)
65.10	2,278,665	-	-	NOTE 2	233.49	19.24	AV cal (0-20% Load)
57.89	2,026,490			NOTE 2	184.67	17.30	TS cal 0-20% (Sec 11.6.1)
54	1,890,000	-	-	NOTE 2	160.63	16.36	SPU AV (0-20% Load)
44.87	1,570,619			NOTE 2	110.93	14.39	Surv. Limit (0-20%) Impl
43.00	1,505,000	-	-	NOTE 2	101.85	14.03	TS (20%) implemented for SPU (Ref. 3.2.20.1)
20	700,000	-	-	NOTE 2	22.03	10.87	**20% Plant Load**
0	0	1019.7	547	2.2925	0	10	0% Plant Load

NOTES:

1) Steam generator pressure and temperature at 100% load are used in this calculation as initial conditions for a steam line break above 78% load.

2) Steam generator pressure and temperature at 0% load are used in this calculation as initial conditions for a steam line up to and including 78% load.

3) For a given % Flow, ΔP is calculated using the equation in section 11.2. The corresponding "normalized" PIR Module mA output is proportional to ΔP . The transmitter top of scale calibration point (50 madc) will occur at 4.3 million #/hr. The PIR module applies a gain factor that re-establishes the correlation of 50 madc to 4.0 million #/hr. The PIR module has an extended output calibration so as to allow for accurate tracking of steam flow conditions up to the 4.3 million #/hr top of scale condition of the transmitter. This configuration provides required accident tracking while maintaining the calibration relationship between Steam flow and Feedwater flow. Additionally, the need for rescaling displays and computer inputs is obviated.

4) This PIR module output of 50 madc will occur at a transmitter output of 44.61 madc which is the 1010.8 inWC (4E6 #/hr) point on the original scale basis. There is, however, associated with this scaling, a small non-conservative calibration offset equal to 0.19% or 0.076 ma which is apparent when the equation in Section 11.2 is solved for the 4E6 #/hr flow case. The actual computed value is equal to 1008.87 inWC. Therefore a Process Measurement bias will be included at all flow rates:

$$PM_{cal} = -0.19\%$$

5) At Stretch Power Uprate the 100% load point steam density will be slightly lower than shown in the Section 11.3 Table. This is a conservative condition since steam mass flow values will actually be lower at the corresponding electrical setpoints. This conservatism remains valid for cases where Full Tavg remains the same or is decreased. However, for cases where FL Tavg is increased (thereby increasing Steam Pressure / Steam Density), there is an additional component of mass flow change in the non-conservative direction. The net effect of these counter acting influences for a maximum FL Tavg increase of 3 deg F (570 F) is a final highest Steam Generator Pressure of 786 psia (SG # 33 for 3.2% Uprate) (Ref. 3.3.19. page 18 Case 6a). This value will be used without adjustment for pressure losses between

the SG dome and the inlet to the BIF flow nozzle. This will yield a conservative estimate the PMa shift in developed DP due to the density change caused by the shift from 770 psia (benchmarked Steam Pressure) to 786 psia.

Steam Density @ 770 psia = 1.6873 #/ft^3

Steam Density @ 786 psia = 1.7889 #/ft^3

Recalculating Dp using the equation in Section 11.2 yields a new Dp at the 4E6 #/hr flow point of 951.5 inWC. This equates to a non-conservative bias of 5.87% Dp.

Therefore:

$$PM_{dp} = -5.87\%$$

6) An additional uncertainty also exists relative to the HZP case in that the estimate of turbine inlet pressure at loads below 25% NSSS power (x) may be inaccurate by as much as 20% of the estimated inlet pressure. The estimated pressure (psia) is calculated using the following formula:

$$y = 0.000014x^2 + 0.170885x - 13.152620$$

The 20% power level in thermal megawatts is the following:

$$P20 = 3216\ (0.20) + 12.6 = 655.8 \text{ Mth}$$

solving for the 20% NSSS power case we get:

$$y = 0.000014(655.8)^2 + 0.170885(655.8) - 13.15260$$

$$y = 104.9348 \text{ psia}$$

An uncertainty (PM_{inlet}) of 20% of this value is the following:

$$PM_{inlet} = 104.9348 \times 0.20$$

$$= 20.987 \text{ psi}$$

This is equivalent to +/- 2.998% of the Inlet Pressure instrument span.

Therefore:

$$PM_{inlet} = +/- 3.0\%$$

11.4 Given that the steam flow instrument loop span is 40 mA (10-50 mA):

CU = +9.69, -11.69% (Section 9.4)

However we must also consider the PM_{dp} effect for flows at 100% load and higher, the PM_{inlet} effect below 25% load, and the PM_{cal} bias which is relevant at all flow rates.

Therefore, for the Hot Zero Power setpoint determination, the uncertainty is the following:

CU = 40 ma x (-0.1169) + 40 ma x (-0.0019) + 40 ma x (-0.03)

CU = -5.952 ma

For the Hot Full Power setpoint determination, the uncertainty is the following:

CU = 40 ma x (-0.1169) + 40 ma x (-0.0587) + 40 ma x (-0.0019)

CU = -7.106 ma

These CUs are then combined with their associated AL and NPL to determine the madc trip setpoint values as shown below.

11.5 In previous revisions of this calculation, line break at 70% load was considered and evaluate using an extrapolated Analytical Limit between the HZP and HFP cases. However, the concern at the 70 load point is relevant only to the Containment Response analysis which credits, for event mitigation, the Containment Pressure trip setpoints and not the HSF SI intiation. For Core Response the HZP MSLB is bounding and thus higher power level cases do not have true SALs. For these reasons the 70% power case will not be evaluated further for the HSF SI initiation function.

11.6 0% to20% and 100% Load Trip Setpoint Evaluations

11.6.1 For a line break at 0% to 20% load (HZP case) and the Analytical Limit of 78%, and the corresponding flow PIR module output values from the Table in Section 11.3, the trip setpoint is calculated as follows:

78% corresponds to 23.26 mA

TS = AL ± (CU)

= 23.26 mA - 5.952 mA = 17.308 mA

17.308 mA corresponds to 57.89% flow (Sec 11.3)

(17.308 ma / 40 ma) x 400 mvDC = 173.08 mvDC

TS_{cal} = 173.0 mvDC

11.6.2 For a line break at 100% Load, a Nominal Process Limit of 144%, and the corresponding flow transmitter output values from the Table in Section 11.3, the trip setpoint is calculated as follows:

144% corresponds to 73.38 mA

$$TS = AL \pm (CU)$$

$$= 73.38 \text{ mA} - 7.106 \text{ mA} = 66.27 \text{ mA}$$

66.27 mA corresponds to 135.68% flow (Sec 11.3)

$$(66.27 \text{ ma} / 40 \text{ ma}) \times 400 \text{ mvDC} = 662.7 \text{ mvDC}$$

$$\mathbf{TS_{cal} = 662.7 \text{ mvDC}}$$

11.7 For a line break at 20% load, the steam density is lower than at 0% load (which was used for computing steam flows up to 78%). This causes a given break's steam flow to generate more ΔP than anticipated in this calculation, thereby generating higher milliamp flow signals than predicted. This causes channel trips to be generated at lower steam flows than calculated. This is a purposely applied conservative effect which increases as flow increases from greater than zero to 78% steam flow.

11.8 For conditions from greater than 78% to 144 % steam flow, the full load pressure and temperature conditions are used. This is appropriate since these flows are break flows which cannot significantly change pressure and temperature prior to a trip being generated. See Note 5, Section 11.3.

ALLOWABLE VALUE (AV)

For SPU license purposes, considering the ongoing regulatory reservations regarding ISA calculation methods for Allowable Value determinations, we will compute AVs here by both the ISA Method 3 (IES-3B approach) and the ISA Method 2 approach.. The value designated for Tech Spec usage will be a value that conservatively bounds both the calculation results.

The Allowable Value (AV) via Method 3, which has traditionally been used for IP3 in accordance with IES-3B (Ref. 3.2.1 is determined as follows: (Section 7.5)

$$AV = TS \pm CU_{CAL}$$

$$CU_{CAL} = \pm (AFT_{e1}^2 + AFT_{e2}^2 + AFT_{en}^2)^{1/2}$$

For this application, i.e. increasing setpoint, the Method 3 AV formula becomes the following:

$$AV = TS + CU_{CAL}$$

Where:

TS = Trip Setpoint

CU_{CAL} = The Channel Uncertainty (CU) as seen during calibration. Therefore, uncertainties due to a harsh environment, process measurement, or primary element are not considered. For conservatism, only RA, DR, and ALT uncertainties are considered.

12.1 Allowable Value (High Steam Flow)

$$CU_{CAL} = \pm (AFT_{e1}^2 + AFT_{e15}^2 + AFT_{e2}^2 + AFT_{e7}^2 + AFT_{e8}^2 + AFT_{e6}^2)^{1/2}$$

$$= \pm [(5.95 \times 1.156)^2 + (1.13 \times 1.156)^2 + 1.00^2 + 1.29^2 + 1.16^2 + 0.92^2)^{1/2}$$

$$= \pm 7.34\ \%$$

Note: AFT_{e1} and AFT_{e15} must be adjusted for the gain factor used in the FQ/FM module for the extension of the DP scale in the flow transmitters.

Converting "% of Δ P span" to ma

CU_{CAL} = (±7.30%) (40 ma span)

CU_{CAL} = ±2.94 ma,

For 0 to 20% load,

$AV_{Calulated} = TS_{Calulated} + CU_{CAL} = 17.30 + 2.94 =$ **20.24 ma**

20.24 mA corresponds to **68.52%** (Sec 11.3)

$AV_{ITS/SPU}$ = **54%**

54% corresponds to **16.36 mA** (Sec 11.3)

$AV_{ITS/SPU}$ = **163.9 mvDC, 54%**

For 100% load,

$AV_{Calulated} = TS_{Calulated} + CU_{CAL} = 66.27 + 2.94 =$ **69.21 ma**

69.21mA corresponds to **139.18%** (Sec 11.3)

$AV_{ITS/SPU}$ = **120%**

120% corresponds to **54.02 mA** (Sec 11.3)

AV_{ITS} = **540.2 mvDC, 120%**

The Allowable Value (AV) via Method 2, which is now being applied for the reasons stated above, will be conservatively calculated by using all uncertainty components not used in Method 3, even given the fact that they are, in some instances, sensed uncertainties and thus not necessary to be included. The formula for the Method 2 AV determination is the following:

$AV = AL \pm CU_{uncal}$

For this application, i.e. increasing setpoint, the Method 2 AV formula becomes the following:

$$AV = AL - CUun_{CAL}$$

$$CU_{uncal} = \pm (PM^2 + PE^2 + e^2_{1uncal} + e^2_{2uncal} + \ldots + e^2_{nuncal})^{1/2} + Bias_e + Bias_{misc}$$

and

$$e_{nuncal} = \pm (TE^2_n + RE^2_n + SE^2_n + SP^2_n + OP^2_n + PS^2_n + MTE^2_n + R^2_n)^{1/2} + B_e$$

$$CU_{uncal} = \pm (PM^2_{SF} + PE^2_{SF} + e^2_{1uncal} + e^2_{15uncal} + e^2_{2uncal} + e^2_{7uncal} + e^2_{8uncal} + e^2_{6uncal})^{1/2}$$

$$- Be_{1a} - PM_{cal} - PM_{dp100} - PM_{inlet20}$$

where B is biases applicable at the 20% and 100% plant load conditions

$$e_{1auncal} = [(3.0^2 + 1.12^2 + 0.1^2 + 0.40^2)^{1/2} - 2.5] \times 1.156 \quad \text{Sect. 8.1}$$

$$= \pm 3.23, -2.89$$

$$e_{15uncal} = (0.70^2 + 0.50^2 + 0.15^2)^{1/2} \times 1.156 \quad \text{Sect. 8.16}$$

$$= \pm 1.01$$

$$e_{2uncal} = \pm (1.0^2 + 1.2^2 + 0.1^2 + 0.52^2)^{1/2} \quad \text{Ref. 3.2.18.1}$$

$$\pm 1.65$$

$$e_{7uncal} = \pm (0.875^2 + 0.25^2 + 0.15^2)^{1/2}$$

$$= \pm 0.92$$

$$e_{8uncal} = \pm (0.25^2 + 0.25^2 + 0.15^2)^{1/2}$$

$$= \pm 0.38$$

$$e_{6uncal} = \pm (0.25^2 + 0.50^2 + 0.15^2)^{1/2}$$

$$= \pm 0.58$$

$PM_{SF} = \pm 0.50$, $PE_{SF} = \pm 0.20$, $PM_{cal} = -0.19$, $PM_{dp100} = -5.87$, $PM_{inlet20} = -3.00$

For the AV at the 100% power condition, CU_{uncal} becomes the following:

$$CU_{uncal} = -(0.50^2 + 0.20^2 + 3.23^2 + 1.01^2 + 1.65^2 + 0.92^2 + 0.38^2 + 0.58^2) - 2.89 - 0.19$$

$$- 5.87$$

$$= -3.97 - 2.89 - 0.19 - 5.87$$

$$= -12.92\% \text{ span}$$

Converting "% of Δ P span" to ma:

$CU_{uncal} = (-12.92\%)$ (40 ma span)

$CU_{uncal} = -5.168$ ma,

Therefore AV for the 100% case is:

$AV_{100} = AL_{100} - CU_{uncal100}$

$= 73.38 - 5.168$

$= 68.212$ ma (this value will be document ed as the bounding calculated AV since it is more conservative than the AV calculated via ISA method 3 i.e. 69.21ma)

For the AV at the 20% power condition, CU_{uncal} becomes the following:

$CU_{uncal} = -(0.50^2 + 0.20^2 + 3.23^2 + 1.01^2 + 1.65^2 + 0.92^2 + 0.38^2 + 0.58^2) - 2.89 - 0.19 - 3.0$

$= -3.97 - 2.89 - 0.19 - 3.00$

$= -10.05\%$ span

Converting "% of Δ P span" to ma:

$CU_{uncal} = (-10.05\%)$ (40 ma span)

$CU_{uncal} = -4.02$ ma,

Therefore AV for the 20% case is:

$AV_{20} = AL_{20} - CU_{uncal20}$

$= 23.26 - 4.02$

$= 19.24$ ma (this value will be document ed as the bounding calculated AV since it is more conservative than the AV calculated via ISA method 3 i.e. 20.24ma)

LOW TAVG COINCIDENT INTERLOCK WITH HIGH STEAM FLOW SAFETY INJECTION ACTUATION AND STEAM LINE ISOLATION

5.0LOOP (BLOCK) DIAGRAM

5.2 Block Diagram (ref 3.4.5)

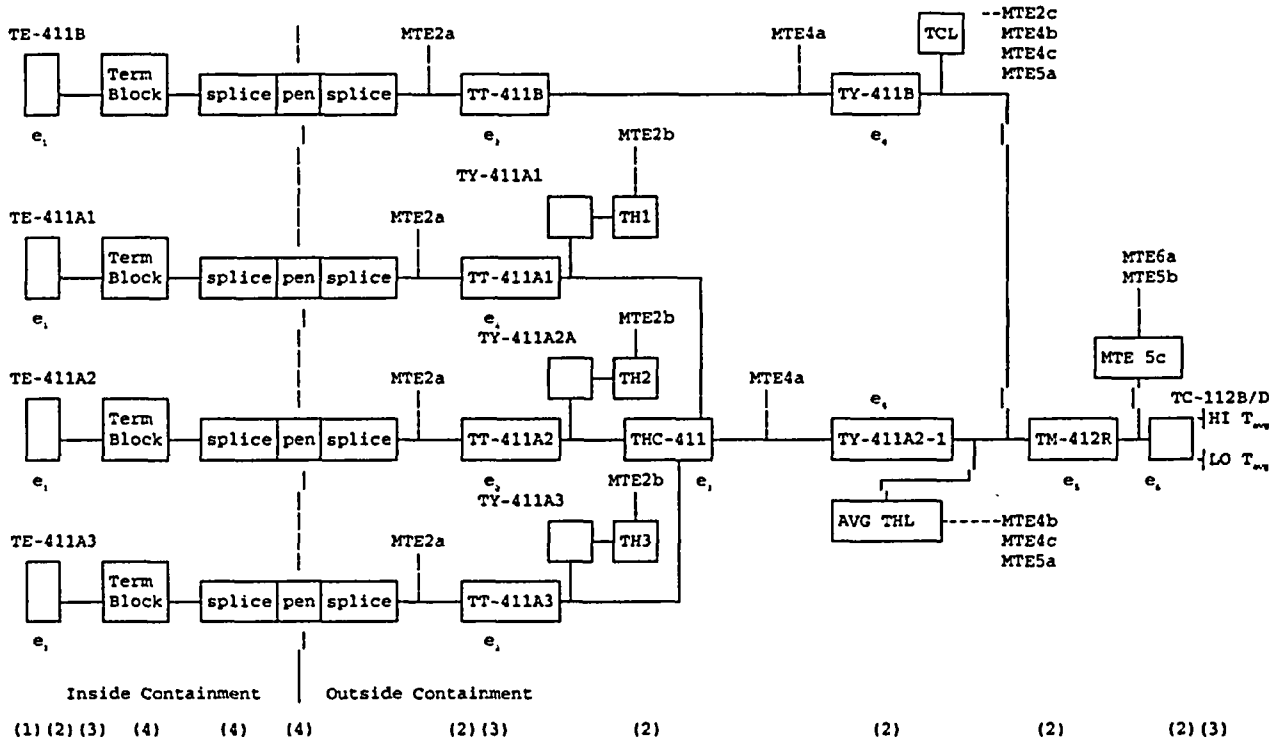

Uncertainty Allowances To Address

(1) Process Measurement Effect
(2) Equipment Uncertainties
(3) Calibration Uncertainties
(4) Other Uncertainties

The above loop diagram is typical for Loops T-421, T-431, T-441.

The random and independent errors include:

ACCICENT	NORMAL	
PM_{hot} = ± 1.00°F	PM_{hot} = ±1.00°F	(sec. 7.1)
PM_{cold} = -0.75°F	Bias PM_{cold} = -0.75°F Bias	(sec. 7.1)
PE = 0.0	PE = 0.0	(sec. 7.2)
e_1 = ± 0.64 °F	e_1 = ± 0.63 °F	(sec. 7.3.12)
e_2 = ± 1.25 °F	e_2 = ± 1.08 °F	(sec. 7.4.11)
e_3 = ± 0.612 °F	e_3 = ± 0.612 °F	(sec. 7.5.11)
e_4 = ± 1.26 °F	e_4 = ± 1.13 °F	(sec. 7.6.11)
e_5 = ± 1.42 °F	e_5 = ± 1.24 °F	(sec. 7.7.11)
e_6 = ± 0.78 °F	e_6 = ± 0.70 °F	(sec. 7.8.11)

The channel uncertainty (CU) is determined by calculating the propagation of the individual error components through the Lo T_{avg} circuit.

Lo T_{avg} is determined by the following:

$T_{HOT} = (T_1 + T_2 + T_3) / 3$, T_{Avg} $(T_{HOT} + T_{COLD}) / 2$

Where, $T_1 + T_2 + T_3$ = Hot Leg RTD/Transmitter Output

T_{HOT} = Hot Leg Average Temperature

T_{COLD} = Cold Teg Temperature

T_{Avg} = T_{HOT} and T_{COLD} Average Temperature

7.10.1 Calculate Total T_{HOT} Channel Uncertainty (CU_{THOT})

To calculate the total T_{HOT} channel uncertainty (CU_{THOT}), first, the average T_{HOT} uncertainty (T) must be determined with individual random uncertainties of modules e_1 and e_2 propagated through the T_{HOT} circuit using the Square Root Sum of Squares (SRSS), as follows:

$$T = \pm[(e^2_1 + e^2_2) + (e^2_1 + e^2_2) + (e^2_1 + e^2_2)]^{1/2} / 3$$

Where,

T = Average Uncertainty of the three Hot Leg measurements.

$$T = \pm[3(e^2_1 + e^2_2)]^{1/2} / 3$$

$$T\ (ACCIDENT) = \pm[3(0.64^2 + 1.25^2)]^{1/2} / 3$$

T (ACCIDENT)= ± 0.811°F

$$T\ (NORMAL) = \pm[3(0.63^2 + 1.08^2)]^{1/2} / 3$$

T (NORMAL)= ± 0.722°F

Please note that the Hot and Cold Leg IRE effects are included in the overall CU uncertainty determination of Section 7.10.4.

The total T_{HOT} Channel Uncertainty (CU_{THOT}) is calculated by including PM, e_3 and e_4 module uncertainties in SRSS as follows:

$$CU_{THOT} = \pm(PM^2 + T^2 + e_3^2 + e_4^2)^{1/2} \pm B$$

Where bias = 0

ACCIDENT $CU_{THOT} = \pm(1.00^2 + 0.811^2 + 0.612^2 + 1.26^2)^{1/2}$

ACCIDENT $CU_{THOT} = \pm 1.90°F$

NORMAL $CU_{THOT} = \pm(1.00^2 + 0.722^2 + 0.612^2 + 1.13^2)^{1/2}$

NORMAL $CU_{THOT} = \pm 1.78°F$

≅ NORMAL CU_{THOT} not including PM = ±1.474°F

7.10.2 Calculate T_{COLD} Uncertainty (CU_{TCOLD})

To calculate CU_{TCOLD}, the random uncertainties of modules e_1, e_2 and e_4 are combined using SRSS:

$CU_{TCOLD} = \pm (Pm^2 + e^2_1 + e^2_2 + e^2_4)^{1/2}$ + Bias

ACCIDENT $CU_{TCOLD} = \pm (0.64^2 + 1.25^2 + 1.26^2)^{1/2} - 0.75$

ACCIDENT $CU_{TCOLD} = \pm 1.89°F - 0.75°F$

NORMAL $CU_{TCOLD} = \pm (0.63^2 + 1.08^2 + 1.13^2)^{1/2} - 0.75$

≅ NORMAL $CU_{TCOLD} = \pm 1.69°F - 0.75°F$

7.10.3 Calculate T_{avg} Uncertainty (CU_{Tavg})

To calculate CU_{TAVG} the CU_{THOT} and CU_{TCOLD} random uncertainties must be propagated through the T_{avg} circuit using SRSS as follows:

$CU_{TAVG} = \pm(CU^2_{THOT} + CU^2_{TCOLD})^{1/2} / 2$

ACCIDENT $CU_{TAVG} = [\pm(1.90^2 + 1.89^2)^{1/2} - 0.75] / 2$

ACCIDENT $CU_{TAVG} = [\pm 2.68°F - 0.75°F] / 2$

ACCIDENT $CU_{TAVG} = \pm 1.34°F, - 0.375°F$

NORMAL $CU_{TAVG} = [\pm(1.78^2 + 1.69^2)^{1/2} - 0.75] / 2$

NORMAL $CU_{TAVG} = [\pm 2.45°F - 0.75°F] / 2$

NORMAL $CU_{Tavg} = \pm 1.23°F - 0.375°F$

7.10.4 Calculate the Total Channel Uncertainty (CU)

To calculate Total CU, modules e_5, e_6 and IRE (IRE for ACCIDENT only) are combined with CU_{Tavg} using SRSS.

$CU_{TOTAL} = \pm (CU^2_{TAVG} + e^2_5 + e^2_6)^{1/2} \pm B$

ACCIDENT $CU_{TOTAL} = \pm (1.34^2 + 1.42^2 + 0.78^2)^{1/2} +0,-1.2,-0.375$

ACCIDENT $CU_{TOTAL} = \pm 2.10°F +0, -1.575$

ACCIDENT $CU_{TOTAL} = +2.10°F, -3.675°F$

NORMAL $CU_{TOTAL} = \pm (1.23^2 + 1.24^2 + 0.70^2)^{1/2} -0.375$

NORMAL $CU_{TOTAL} = \pm 1.88°F, -0.375°F$

NORMAL $CU_{TOTAL} = +1.88°F, -2.25°F$

9.0 DETERMINE SETPOINTS(TS)AND RTD CONVERTER CALIBRATIONS

The nominal trip setpoint can be calculated from the following equation:

TS = AL ± (CU + Margin) (ref. 3.1.2)

If Margin = 0.0

Channel Uncertainty is:

ACCIDENT CU = +2.10°F, -3.675°F (Section 7.10.4)

NORMAL CU = +1.88°F, -2.25°F

9.1 LO T_{avg} TS calculation:

The negative value of CU is not used to determine TS since the process is decreasing towards the analytical limit. Accident conditions are possible during a LO T_{avg} event. Therefore,

TS = 535°F +2.10°F

TS= 537.10°F (DEC),or when scaled for 400mV and 75°F span, the decreasing mV signal is [400 mV(537.10-540) / 75]+100 = 84.5mV(DEC)which is below scale. NOTE: The existing setpoint is conservatively set at 542°F or 110.67 mV decreasing (Ref. 3.5.7).

9.2 HI T_{avg} TS calculation:

The positive value of CU is not used to determine HI T_{avg} TS since the process increases towards the alarm limit. Also, harsh environment accident conditions are not considered present during a HI Tavg event. Therefore:

TS = 574.8°F –2.25°F

TS = 572.55°F (INC), or when scaled for a 400mV and 75°F span the increasing mV signal is [400 mV(572.55-540) / 75]+100 = 273.6 mV (INC). NOTE: The existing setpoint is conservatively set at 569.89°F or 259.46 mV increasing. (Ref. 3.5.7).

The above setpoint at 569.89°F adequately supports the current operating Full Load Tavg of 567°F as well as the Hi Tavg alarm NPL of 574.8°F. However, it may be necessary to increase Full Load Tavg as much as 3 degs to achieve adequate Main Steam Pressure for acceptable turbine first stage performance . Potential changes will be considered in 1 deg increments, specifically at 568, 569, and 570°F. We will therefore configure the following setpoint changes if and at what value the full load condition is actually changed to:

FL Tavg (°F)	Hi Tavg Setpoint (°F)	Hi Tavg Setpoint (mV)
568	570.90	264.80
569	571.90	270.13
570	572.55	273.60

10.0 DETERMINE ALLOWABLE VALUE (AV)

The Allowable Value (AV) for(L0 T_{avg}) the ACCIDENT CU (can be calculated from the following equation (Method 3 of ref 3.1.2).

$$AV = TS \pm CU_{CAL}$$

Where,

TS = Trip Setpoint

CU_{CAL} = Channel Uncertainty (CU) as seen during Loop calibration. Therefore, uncertainties due to a harsh environment, process measurement, or primary element are not considered. For conservatism, only RA, DR and ALT uncertainties are considered.

Therefore CU_{CAL} will be based on:

$$CU_{CAL} = \pm[(e_{1CAL})^2 + (e_{2CAL})^2 + \square + \square + (e_{nCAL})^2]^{1/2} \quad \text{where;}$$

$$e_{nCAL} = \pm(RA_n^2 + DR_n^2 + ALT_n^2)^{1/2}$$

The AV will be calculated using the SRSS method which is consistent with the method used for the determination of the trip setpoint. Therefore, a check calculation is not required. (ref. 3.1.2)

10.1 Determine e_{CAL}

As defined above CU_{CAL} only considers the normal uncertainties as seen during calibration, therefore, the module uncertainty equation e_1 reduces to:

$e_{nCAL} = \pm (RA^2_n + DR^2_n + ALT^2_n + SH^2_n)^{1/2}$ where the additional "SH"

contributor is the RTD Self Heating effect.

The e_1 effects for RA, DR, ALT and SH (from Section 7.3) are

substituted in the above equation.

$$e_{1CAL} = \pm (0.03^2 + 0.045^2 + .07^2 + 0.0015^2_1)^{1/2}$$

$$e_{1CAL} = \pm 0.088\% \text{ of span}$$

The calibrated span for e_1 is 30-700°F, therefore,

$$e_{1CAL} = \pm (0.088\%)(670°F)$$

$$e_{1CAL} = \pm 0.593°F$$

Similarly for modules e_2, e_3, e_4, e_5 and e_6 the uncertainty associated with the module calibration is:

$$e_{2CAL} = \pm (0.50^2 + 0.41^2 + 0.50^2)^{1/2}$$

$$e_{2CAL} = \pm 0.817\% \text{ of span}$$ (Sec. 7.4)

The bounding calibration span is 120°F. However, to maintain conservatism for this calculation, we will assume the previous 105°F span for e_{2CAL}, therefore:

$$e_{2CAL} = \pm (0.817\%)(105°F)$$

$$e_{2CAL} = \pm 0.858°F$$

$$e_{3CAL} = \pm (0.10^2 + 0.00^2 + 0.00^2)^{1/2}$$

$e_{3CAL} = \pm 0.10\%$ of span (Sec. 7.5)

The considered calibration span for e_3 is 105°F, therefore,

$e_{3CAL} = \pm (0.10\%)(105°F)$

$e_{3CAL} = \pm 0.10°F$

$e_{4CAL} = \pm (0.5^2 + 0.25^2 + 0.5^2)^{1/2}$

$e_{4CAL} = \pm 0.75\%$ of span (Sec. 7.6)

The calibrated span for e_4 is 105°F, therefore,

$e_{4CAL} = \pm (0.75\%)(105°F)$

$e_{4CAL} = \pm 0.788°F$

$e_{5CAL} = \pm (0.20^2 + 0.65^2 + 0.5^2)^{1/2}$

$e_{5CAL} = \pm 0.844\%$ of span (Sec. 7.7)

The calibrated span for e_5 is 75°F, therefore,

$e_{5CAL} = \pm (0.844\%)(75°F)$

$e_{5CAL} = \pm 0.633°F$

$e_{6CAL} = \pm (0.50^2 + 0.20^2 + 0.5^2)^{1/2}$

$e_{6CAL} = \pm 0.735\%$ of span (Sec. 7.8)

The calibrated span for e_6 is 75°F , therefore,

$e_{6CAL} - \pm (0.735\%)(75°F)$

$e_{6CAL} - \pm 0.551°F$

10.2 Determine CU_{CAL}

Given the above CU_{CAL} definition, the channel uncertainty equation from Section 7.10 reduces to:

$CU_{CAL} = \pm (e^2_{1CAL} + e^2_{2CAL} + e^2_{3CAL} + e^2_{4CAL} + e^2_{5CAL} + e^2_{6CAL})^{1/2}$

Since CU_{CAL} is a function of the T_{HOT} and T_{COLD} parameters of Lo Tavg, the T, CU_{THOT}, CU_{TCOLD} and CU_{TAVG} equations must be calculated for the calibration portion of the loop. Therefore, solving for T_{CAL},

$T_{CAL} = \pm [3(e^2_{1CAL} + e^2_{2CAL})]^{1/2} / 3$

$T_{CAL} = \pm [3(0.593^2_{1CAL} + 0.858^2_{2CAL})]^{1/2} / 3$

$T_{CAL} = \pm 0.602°F$

Solving for CU_{THOT} calibration,

$CU_{THOT\,CAL} = \pm (T^2_{CAL} + e^2_{3CAL} + e^2_{4CAL})^{1/2}$ (Sec. 7.10.1)

$CU_{THOT\,CAL} = \pm (0.602^2 + 0.10^2 + 0.788^2)^{1/2}$

$CU_{THOT\ CAL} = \pm 0.997°F$

Solving for CU_{TCOLD} calibration,

$CU_{TCOLD\ CAL} = \pm (e^2_{1CAL} + e^2_{2CAL} + e^2_{4CAL})^{1/2}$ (Sec. 7.10.2)

$CU_{TCOLD\ CAL} = \pm (0.593^2 + 0.858^2 + 0.788^2)^{1/2}$

$CU_{TCOLD\ CAL} = \pm 1.307°F$

Solving for CU_{TAVG} calibration,

$CU_{TAVG\ CAL} = \pm (CU^2_{TCOLD} + CU^2_{THOT})^{1/2} /2$ (Sec. 7.10.3)

$CU_{TAVG\ CAL} = \pm (1.307^2 + 0.997^2)^{1/2} /2$

$CU_{TAVG\ CAL} = \pm 0.822°F$

Solving for CU calibration (CU_{CAL}),

$CU_{CAL} = \pm (CU^2_{TAVG} + e^2_{5CAL} + e^2_{6CAL})^{1/2}$ (Sec. 7.10.4)

$CU_{CAL} = \pm (0.822^2 + 0.633^2 + 0.551^2)^{1/2}$

$CU_{CAL} = \pm 1.175°F$

10.3 Allowable Value (AV) Calculation

10.3.1 Calculating for L0 T_{avg} Allowable Value (AV_{LO})

given, TS_{LO} = 537.10°F (Sec. 9.1)

CU_{CAL} = ± 1.175°F

The magnitude of CU_{CAL} is combined with the Trip Setpoint in an appropriate direction to determine AV_{LO} for a decreasing signal. Therefore,

$AV_{LO} = TS - CU_{CAL}$

AV_{LO} = 537.10 - 1.175°F

AV_{LO} = 535.925°F

NOTE: AV_{LO} is greater than AL, 535.925°F is greater than 535°F. The Tech Spec AV will be conservatively identified as 540.5°F to assure the value is on scale.

10.3.2 Calculating for HI T_{avg} Nominal Allowable Value (NAV_{HI})

given, TS_{HI} = 572.55°F (Sec. 9.1)

CU_{CAL} = ± 1.175°F

The magnitude of CU_{CAL} is combined with the Trip Setpoint in an appropriate direction to determine NAV_{HI} for a increasing signal. Therefore,

$NAV_{HI} = TS + CU_{CAL}$

NAV_{HI} = 572.55 + 1.175°F

NAV_{HI} = 573.725°F

Allowable value (AV)

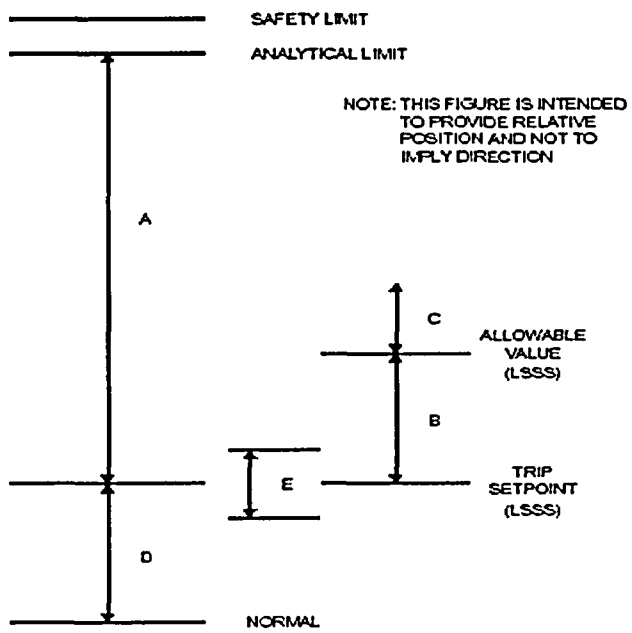

A. ALLOWANCE DESCRIBED IN PARAGRAPH 4.3.1
B. ALLOWANCE DESCRIBED IN PARAGRAPH 4.3.2
C. REGION WHERE CHANNEL MAY BE DETERMINED INOPERABLE
D. PLANT OPERATING MARGIN
E. REGION OF CALIBRATION TOLERANCE (ACCEPTABLE AS LEFT CONDITION) DESCRIBED IN PARAGRAPH 4.3.1

Figure 1 — Nuclear safety-related setpoint relationships

The **AV** is a value that the trip setpoint might have when tested periodically, beyond which the instrument channel should be evaluated for operability. An "as-found" trip setpoint **(TS)** within the **AV** ensures that sufficient allocation exists between this actual setpoint and the analytical limit **(AL)** to account for instrument uncertainties, such as design-basis accident temperature and radiation effects or process-dependent effects, that either are not present or are not measured during periodic testing. This will provide assurance that the analytical limit will not be exceeded if the **AV** is satisfied. The **AV** also provides a means to identify unacceptable instrument performance that may require corrective action.

Three methods for determining **AV** are illustrated in figure 6. The allowance between the **AV** and the trip setpoint should contain that portion of the instrument channel being tested for the surveillance interval and should account for no more than:

a) drift (based on surveillance interval);
b) instrument calibration uncertainties for the portion of the instrument channel tested; and
c) instrument uncertainties during normal operation that are measured during testing

Excluding any of these parameters from the allowance between the **AV** and the **TS** is conservative since the difference between the **AL** and the **AV** will increase. Thus, decreasing the difference between the **TS** and AV results in a smaller allowance for drift for the channel being tested. However, in all cases the difference between the **AV** and the **TS** must be at least as large as the calibration tolerance (As-Left Tolerance).

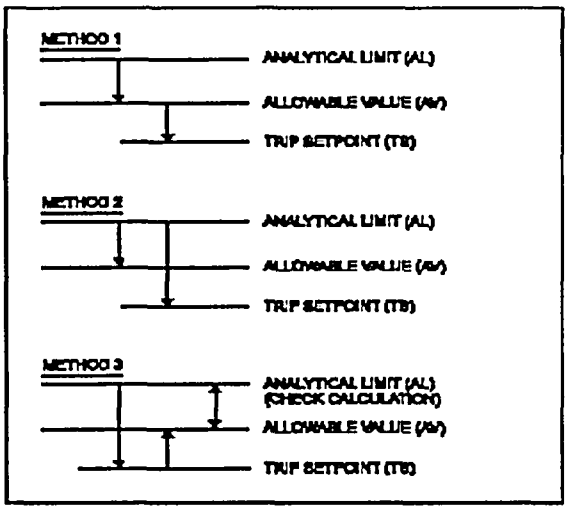

Figure 6 — Methods for determining the allowable value

In figure 6 and the discussion that follows, it is assumed that the process increases toward the **AL**. If the process decreases toward the **AL**, the directions given would be reversed. In the first and second methods shown in figure 6, the **AV** is determined by calculating the instrument channel uncertainty without including the items identified above (drift, calibration uncertainties, and uncertainties observed during normal operations). This result is then subtracted from the **AL** to establish the **AV**. In the first method the **TS** is then determined by subtracting from the **AV** the combination of the uncertainties: drift, calibration uncertainties, and uncertainties observed during normal operation. In the second method shown in figure 6, the **TS** is calculated as $\mathbf{TS = AL \pm (CU + margin)}$. Where:
TS = trip setpoint;
AL = analytical limit;
CU = channel uncertainty;
margin = an amount chosen, if desired, by the user for conservatism of the trip setpoint.

The third method to calculate the **AV** illustrated in figure 6 first calculates the **TS** as $\mathbf{TS = AL \pm (CU + margin)}$. Then, an allowance for the three categories of instrument uncertainty (drift, calibration uncertainty, and uncertainties during normal operation) is calculated. This allowance is then added to the **TS** to establish the **AV**.

At Indian Point Unit 3, **AV** and the **TS** are determined as discussed above for Method 3. For each **AL** relate loop component; the Component Reference Accuracy (RA), Drift (DR) and the As-Left Tolerance (ALT) are combined using SRSS. This value for each component is the As-Found Tolerance (AFT). The AFT is the maximum value that may be used in the surveillance or calibration procedure for the component. The AFT for each **AL** related loop component is then combined using SRSS. This value is then added to the **TS** to establish the **AV**.

When the uncertainty values used to determine AV are applied consistently the method 1, 2, or 3 will each yield a conservative result. Method 2 will be used below to evaluate the adequacy of the **AV** documented in calculation IP3-CALC-ESS-00281. In the Method 2 below, "U_{TOTAL}", will represent the total uncertainty that will be combined with the **AL** to determine **AV**. U_N will be determined for each module; these values will be combined using SRSS and will be combined with any applicable bias to determine U_{TOTAL}. $AV = AL \pm (U_{TOTAL})$

1.3 Determine U_3, from the calculation, e_3 was reduced to:

$e_3 = \pm(RA_3^2 + PS_3^2)^{1/2} \pm B_3$ (ref. 3.1.2)

Where: Bias = 0

$e_3 = \pm(0.10^2 + 0.50^2)^{1/2} \pm 0$

$e_3 = \pm 0.51\%$ of span, Without RA, DR & ALT $U_3 = \pm 0.50\%$ of span

Given that the calibrated span of the R/E will be bounded by 120°F, e_3 effect in terms of "°F " is,
$e_3 = (120°F)\ (0.51\%) = \pm\ 0.612°F$, $U_3 = \pm 0.600°F$

AFT_3 is N/A

1.4 Determine U_3, from the calculation, e_4 was reduced to:

$e_4 = \pm(RA_4^2 + DR_4^2 + TE_4^2 + PS_4^2 + MTE_4^2 + ALT_4^2)^{1/2} \pm B_4$

Where: Bias = 0

For Accident LO T_{Avg} setpoint $e_4 = \pm(0.5^2 + 0.25^2 + 0.52^2 + 0.5^2 + 0.11^2 + 0.50^2)^{1/2} \pm 0$

$e_4 = \pm 1.05\%$ of span, Without RA, DR & ALT $U_4 = \pm 0.73\%$ of span

$AFT_4 = 0.75\%$ of span

For Normal HI T_{Avg} setpoint $e_4 = \pm(0.5^2 + 0.25 + 0.243^2 + 0.50^2 + 0.11^2 + 0.50^2)^{1/2} \pm 0$

$e_4 = \pm 0.94$ % of span, Without RA, DR & ALT $U_4 = \pm 0.57\%$ of span

$AFT_4 = 0.75\%$ of span

Given the E/I (Cold Leg and Hot Leg) calibrated span will be bounded by 120 °F degrees,
e_4 effect in terms of "°F " is,
Accident for LO T_{Avg} setpoint $e_4 = \pm(1.05\%)(120°F)$

$e_4 = \pm 1.26°F$, $U_4 = \pm 0.876°F$

Normal for HI T_{Avg} setpoint $e_4 = \pm(0.94\%)(120°F)$

$e_4 = \pm 1.13°F$, $U_4 = \pm 684°F$

1.5 Determine U_5, from the calculation, e_5 was reduced to:

$e_5 = \pm(RA_5^2 + DR_5^2 + TE_5^2 + PS_5^2 + MTE_5^2 + ALT_5^2)^{1/2} \pm B_5$ (ref.3.1.2)

Where: Bias = 0

For Accident LO T_{Avg} setpoint,

$e_5 = \pm(0.20^2 + 0.65^2 + 0.65^2 + 0.50^2 + 0.12^2 + 0.50^2)^{1/2} \pm 0$

$e_5 = \pm 1.18\%$ of span,

Because this module generates its full output electrical span using only 5/8th of its input (i.e 5 volts in for 8 volts out), we will multiple the uncertainty by 8/5 to account for the gain effect on uncertainty. Therefore:

$e_5 = \pm 1.89\%$ of span, Without RA, DR & ALT $U_5 = \pm 1.32\%$ of span

$AFT_5 = 1.35\%$ of span

For Normal HI T_{Avg} setpoint,

$e_5 = \pm(0.20^2 + 0.65^2 + 0.30^2 + 0.50^2 + 0.12^2 + 0.50^2)^{1/2} \pm 0$

$e_5 = \pm 1.03\%$

Because of the input to output relationship discussed above, we will also multiply this uncertainty by 8/5 to account for the gain effect. Therefore:

$e_5 = \pm 1.65\%$ of span, Without RA, DR & ALT $U_5 = \pm .95\%$ of span

$AFT_5 = 1.35\%$ of span

Given the dynamic compensator (Cold Leg and Hot Leg) calibrated span is 540 to 615°F or 75°F, e_5 effect in terms of "°F " is, (ref. 3.5.4)

Accident for LO T_{Avg} setpoint $e_5 = \pm(1.89\%)(75°F)$

$e_5 = \pm 1.42°F$, $U_5 = \pm .99°F$

Normal for HI T_{Avg} setpoint $e_5 = \pm(1.65\%)(75°F)$

$e_5 = \pm 1.24°F$, $U_5 = \pm .712°F$

1.6 Determine U_6, from the calculation, e_6 was reduced to:

$e_6 = \pm(RA_6^2 + DR_6^2 + TE_6^2 + PS_6^2 + MTE_6^2 + ALT_6^2)^{1/2} \pm B_6$ (ref.3.1.2)

Where: Bias = 0

Accident for LO T_{Avg} setpoint $e_6 = \pm(0.5^2 + 0.20^2 + 0.52^2 + 0.50^2 + 0.11^2 + 0.50^2)^{1/2} \pm 0$

$e_6 = \pm 1.04\%$ of span, Without RA, DR & ALT $U_6 = \pm .73\%$ of span

$AFT_6 = 0.73\%$ of span

Normal for HI T_{Avg} setpoint $e_6 = \pm(0.5^2 + 0.20^2 + 0.243^2 + 0.50^2 + 0.11^2 + 0.50^2)^{1/2} \pm 0$

$e_6 = \pm 0.93\%$ of span, Without RA, DR & ALT $U_6 = \pm .57\%$ of span

$AFT_6 = 0.73\%$ of span

Given the bistable (Cold Leg and Hot Leg) calibrated span is 540°F to 615°F or 75°F, e_6 effect in terms of "°F " is,(ref.3.5.4)

Accident for LO T_{Avg} setpoint $e_6 = \pm(1.04\%)(75°F)$

$e_6 = \pm 0.78°F$, $U_6 = \pm .548°F$

Normal for HI T_{Avg} setpoint $e_6 = \pm(0.93\%)(75°F)$

$e_6 = \pm 0.70°F$, $U_6 = \pm .428°F$

2.0 Determine U_{TOTAL}

Since we are considering Loop uncertainty, the applicable $U_{TOTAL\ NORMAL}$ is a function of the T_{HOT} and T_{COLD} parameters of Lo Tavg, the T, U_{THOT}, U_{TCOLD} and U_{TAVG} equations must be calculated for the calibration portion of the loop. Therefore, solving for T_U,

2.1 Determine U_{TOTAL} NORMAL

$T_U = \pm [3(U_1^2 + U_2^2)]^{1/2} / 3$

$T_U = \pm [3(0.2°F^2 + 0.456°F^2)]^{1/2} / 3$

$T_U = \pm 0.287°F$

Solving for U_{THOT} calibration,

$U_{THOT} = \pm (T_U^2 + U_3^2 + U_4^2)^{1/2}$

$U_{THOT} = \pm (0.287°F^2 + 0.60°F^2 + 0.684°F^2)^{1/2}$

$U_{THOT} = \pm 0.954°F$

Solving for U_{TCOLD} calibration,

$U_{TCOLD} = \pm (U_1^2 + U_2^2 + U_4^2)^{1/2}$

$U_{TCOLD} = \pm (0.2°F^2 + 0.456°F^2 + 0.684°F^2)^{1/2}$

$U_{TCOLD} = \pm 0.846°F$

Solving for U_{TAVG} calibration,

$U_{TAVG} = \pm (U^2_{TCOLD} + U^2_{THOT})^{1/2} /2$ (Sec. 7.10.3)

$U_{TAVG} = \pm (0.846^2 + 0.954^2)^{1/2} /2$

$U_{TAVG} = \pm 0.638°F$

Solving for U_{TOTAL} calibration (CU_{CAL}),

$U_{TOTAL} = \pm (U^2_{TAVG} + U_5^2 + U_6^2 + PM_{RANDOM}^2)^{1/2}$ +bias, - bias (Sec. 7.10.4)

$U_{TOTAL} = \pm (0.638^2 + 0.712°F^2 + 0.428°F^2 + 1.0^2)^{1/2}$ +0.0, -0.375

$U_{TOTAL} = + 1.448°F, - 1.422$ NORMAL

2.2 Determine U_{TOTAL} ACCIDENT

Using values for accident conditions yields the following:

$\pm(0.2°F^2 + 0.768°F^2 + 0.60°F^2 + 0.876°F^2 + 0.99°F^2 + 0.548°F^2)^{1/2}$

$T_U = \pm [3(U_1^2 + U_2^2)]^{1/2} / 3$

$T_U = \pm [3(0.2°F^2 + 0.768°F^2)]^{1/2} / 3$

$T_U = \pm 0.458°F$

Solving for CU_{THOT} calibration,

$U_{THOT} = \pm (T_U^2 + U_3^2 + U_4^2)^{1/2}$

$U_{THOT} = \pm (0.458°F^2 + 0.60°F^2 + 0.876°F^2)^{1/2}$

$U_{THOT} = \pm 1.156°F$

Solving for CU_{TCOLD} calibration,

$U_{TCOLD} = \pm (U_1^2 + U_2^2 + U_4^2)^{1/2}$

$U_{TCOLD} = \pm (0.2°F^2 + 0.768°F^2 + 0.876°F^2)^{1/2}$

$U_{TCOLD} = \pm 1.182°F$

Solving for U_{TAVG} calibration,

$U_{TAVG} = \pm (U^2_{TCOLD} + U^2_{THOT})^{1/2} /2$

$U_{TAVG} = \pm (1.182^2 + 1.156^2)^{1/2} /2$

$U_{TAVG} = \pm 0.827°F$

Solving for U_{TOTAL}

$U_{TOTAL} = \pm (U^2_{TAVG} + U_5^2 + U_6^2 + PM_{RANDOM}^2)^{1/2}$ +bias, - bias

$U_{TOTAL} = \pm (0.827^2 + 0.99°F^2 + 0.548°F^2 + 1.0^2)^{1/2}$ +0.0, -1.2,-0.375

$U_{TOTAL} = \pm 1.72°F$ +0.0, -1.2, -0.375 ACCIDENT

$U_{TOTAL} = +1.72°F, -3.30$ ACCIDENT

3.0 Allowable Value (AV) Calculation AV = AL ± (U_{TOTAL})

3.1 AV For the AL LOW of 535°F will be determined using U_{TOTAL} NORMAL. Since the process is decreasing toward the setpoint, the Negative error will be evaluated.

U_{TOTAL} Normal = + 1.047°F, - 1.422

AV_{LO} U_{TOTAL} Normal = 535 + 1.422

AV_{LO} U_{TOTAL} Normal = 536.422

NOTE: AV_{LO} is less than the calculated setpoint (TS) and is therefore conservative for the parameter decreasing to the TS. AV, 536.422°F is less than 537.10°F. The Tech Spec AV will be identified as 540.5°F to assure the value on scale.

3.2 NAV For the NPL LOW of 574.8°F will be determined using U_{TOTAL} ACCIDENT. Since the process is increasing toward the setpoint, the Positive error will be evaluated.

U_{TOTAL} Accident = +1.72°F, –3.30

NAV_{HI} U_{TOTAL} Accident = 574.8 – 1.72

NAV_{HI} U_{TOTAL} Accident = 573.08

NOTE: NAV_{HI} is greater than the calculated setpoint (TS) and is therefore conservative for the parameter increasing to the TS (NAV, 573.08°F is greater than 572.55°F).

Question NL-04-073-IC-5:

In Table 2, "Cross-Map of Technical Specification Changes to WCAP-16157-P Analyses," of Attachment I to April 12 letter, the comments on Function 9, "Reactor Coolant Flow - low," and Function 13, "Steam Generator water level - low-low," stated that "since one of the non-tested uncertainties (process measurement accuracy) changed slightly for the SPU, a revised allowable value was calculated." Provide a further explanation of the uncertainty and the revised value.

Response NL-04-073-IC-5:

This question is not directly applicable to the Unit 3 SPU LAR since the RPS/ESFAS matrix of changes does not include entries for Reactor Coolant Flow and Steam Generator Water Level which were unaffected by SPU changes. However, separate from the SPU context, any information notices received relative to generic re-estimates of PMAs, or any other error effects, are evaluated for impact on implemented setpoints, Allowable Values and surveillance acceptance limits. In the unlikely event that a Tech Spec AV is subsequently found to be non-bounding due to the changed error component (IP3 AVs typically include margin to the calculated limiting value) appropriate notification and corrective actions would be initiated.

Question NL-04-073-IC-6:

In Attachment III to April 12, Item 6, "RTD [resistance temperature detector] Replacement Project," stated, in part, that each RCS hot leg and cold leg has three narrow-range RTDs, the existing direct-immersion RTDs will be removed, and new well-mounted dual-element RTDs will be inserted into two of the three thermowells. The third thermowell will be capped for future use. Because these RTDs provide inputs to the protection system, provide additional detailed information of the RTD design modification and the supporting safety analyses for the modification.

Response NL-04-073-IC-6:

This question does not apply to IP3.

IP3 was originally provided with RCS Loop RTD Bypass Manifolds which were subsequently abandoned. The Narrow Range RTD installations were then reconfigured as "well-resident" elements.

Question NL-04-073-IC-7:

Provide a statement to clarify that no modification to exiting instrumentation and controls are required for the SPU, except for certain reactor trip system/engineered safety feature actuation system nominal trip setpoint and TS AV changes, and that the IP2 instrumentation and control systems will continue perform their intended safety functions.

Response NL-04-073-IC-7:

The IP3 instrumentation and control systems will continue to perform their intended safety functions. Specifically, as identified in the LAR submittal, specific Reactor trip and ESFAS nominal trip setpoints and TS AV changes will be implemented to support SPU power level

conditions. However, in addition to these calibration/administrative changes, we are also implementing a modification to the Main Steam Flow monitoring instrument channels and are replacing a number of isolating and scaling modules to improve performance in various other loops.

Specifically with respect to the Main Steam Flow channels, SPU analyses of the postulated HFP MSLB event prompted a recommendation that the calibrated span of the Main Steam Flow transmitters be increased from the current 4 million lbm/hr to 4.3 million lbm/hr. In conjunction with implementing this change, a qualified scaling module will be added to each of the 8 flow monitoring channels to ensure accurate tracking of steam flow conditions under both normal and accident conditions (resulting from the above steam line break analysis). The added scaling modules, which will receive their inputs from the recalibrated flow transmitters, will have a scaling factor chosen to replicate the existing 4 million lbm/hr span (for normal operation) while at the same time, accurately follow and propagate signal levels proportional to the new 4.3 million lbm/hr span (for accident mitigation purposes). The use of these scaling modules ensures continued support of intended safety functions while at the same time provides the benefit of being able to retain the existing scaling of all associated instrument systems such as SG level Control and all Main Steam and Main Feedwater Flow indicators, recorders and computer inputs. Also, redundant isolation modules which were unnecessarily installed in each channel will be removed to provide enhanced accuracy, signal response and loop reliability.

Specifically with respect to replacing other modules, we are replacing 7 isolators and 1 summing module in the Pressurizer Pressure (4 isolators), Pressurizer Level (3 isolators) and Average Tavg (1 summer) monitoring loops to maintain required accuracy for Operations surveillance of system parameters to ensure compliance with the initial conditions assumed in various of the Accident and Transient Safety Analyses.

Question NL-04-073-PVM-1:

Table 5.1-3 of the application report indicates that all beltline materials will have Charpy upper-shelf energy (USE) greater than 50 ft-lbs. Paragraph IV.A.1.a of Appendix G to 10 CFR Part 50 requires the Charpy USE to be greater than 50 ft-lbs throughout the life of the vessel unless it is demonstrated in a manner approved by the Director, Office of Nuclear Reactor Regulation, that lower values of Charpy USE will provide margins of safety against fracture equivalent to those required by Appendix G of Section XI of the American Society of Mechanical Engineers Boiler and Pressure Vessel Code (ASME Code).

The reduction in Charpy USE from neutron irradiation may be calculated using methods described in Regulatory Guide (RG) 1.99, "Radiation Embrittlement of Reactor Vessel Material," Revision 2. This RG indicates that the reduction in Charpy USE should be determined from surveillance data when two or more credible surveillance data sets become available from the reactor. IP2 has Charpy test data from four surveillance capsules.

a. Provide the results of an evaluation of each IP2 surveillance material (Intermediate Shell Plate B-2002-1, Intermediate Shell Plate B-2002-2, Intermediate Shell Plate B-2002-3, and Intermediate Shell Axial Welds 2-042 A/C) to determine its percent drop in Charpy USE and projected USE value at the end of life (EOL) at the power uprate conditions using the methodology in RG 1.99, Revision 2, Section 2.2. Provide all surveillance data and analysis of the data.

b. If the projected Charpy USE value is less than 50 ft-lbs, provide an analysis in accordance with paragraph IV.A.1.a of Appendix G of 10 CFR Part 50. The analysis should be performed using the criteria and methodology in RG 1.161, "Evaluation of Reactor Pressure Vessels with Charpy Upper Shelf Energy less than 50 ft-lb," and Appendix K of Section XI of the ASME Code. The analysis should be performed at EOL including the effects of the power uprate for all materials with Charpy USE values less than 50 ft-lbs.

Response NL-04-073-PVM-1a:

The measured % decrease in USE from the surveillance material tests were used to determine the predicted % decrease in USE for the Lower Shell Plate B-2803-3. The measured values are documented in Table 5-10 of WCAP-16251-NP [*No other beltline material has more than one set of surveillance data, thus can not be used to determine percent decrease in USE*]. As a result, all predicted USE values at EOL remain above the 50 ft-lb screening criteria. The following table provides the requested results.

Table NL-04-073-PVM-1-1

Predicted 27.1 EFPY USE Calculations for all the Beltline Region Materials with Bounding (3216 MWt) SPU Fluences

Material	Weight % of Cu	1/4T EOL Fluence (10^{19} n/cm^2)	Unirradiated USE (ft-lb)	Projected USE Decrease (%)[1]	Projected EOL USE (ft-lb)
Intermediate Shell Plate B2802-1	0.20	0.550	102	25	77
Intermediate Shell Plate B2802-2	0.22	0.550	97	27	71
Intermediate Shell Plate B2802-3	0.20	0.550	95	25	71
Lower Shell Plate B2803-1	0.19	0.550	72	24	55
Lower Shell Plate B2803-2	0.22	0.550	94	27	69
Lower Shell Plate B2803-3	0.24	0.550	68	23[2]	52[2]
Intermediate and Lower Shell Weld Longitudinal Weld Seams (heat 34B009)	0.19	0.550	112	28	80
Intermediate to Lower Shell Circumferential weld Seams (heat 13253)	0.22	0.550	111	31	77

Notes:

1. Values are deduced from Figure 2 of Regulatory Guide 1.99, Revision 2, Predicted Decrease in Upper Shelf Energy as a Function of Copper and Fluence.
2. Using Surveillance Capsule Data from previously analyzed Capsules T, Y, Z and X (All measured data summarized in WCAP-16251-NP). Note that these values has been updated from the WCAP-16212-P to account for the surveillance test result for Capsule X and updating the Charpy plots using CVGraph.

Response to NL-04-073-PVM-1b:

All predicted USE values are greater than 50 ft-lbs at EOL, therefore no further USE analysis is required.

Question NL-04-073-PVM-2:

Section 5.1.2.2 of the application report indicates the slight change in fluence due to the updated power distributions (the stretch power uprate fluence) also had no effect on the applicability date of the existing Pressure-Temperature (P-T) limit curves. The IP2 P-T curves are applicable for 25 effective full power years (EFPY) and are contained in WCAP-15629, Revision 1. The limiting material for establishing the IP2 P-T limit curves is the Intermediate Shell Plate B-2002-3 with an adjusted reference temperature (ART) at the 1/4 thickness (T) location at 25 EFPY of 195°F, which was calculated using surveillance data in accordance with RG 1.99, Revision 2, Position 2.1.

Provide the ART at the 1/4 T location at 25 EFPY including the effect of the proposed power uprate. If the ART for the power uprate condition exceeds 195°F, provide updated P-T limit curves. In addition, provide the values for neutron fluence at the 1/4 T location, 3/4 T location, and chemistry factor for plate B-2002-3.

Response NL-04-073-PVM-2:

The effect of the SPU was determined by calculating a new applicability date, not by calculating new ART values. Therefore, new ART values do not exist. The new applicability date was 0.7 EFPY different, thus a reduction in EFPY to 34.0 EFPY was established. Pressure-temperature curves for 34 EFPY were developed for IP3. These 34 EFPY curves were submitted in IP3 Amendment 220 with a labeled limit of 20 EFPY to match the limit for the OPS arming temperature. Future TS amendments to the IP3 pressure-temperature specifications will only involve changes to the LTOPS arming temperature, which will increase with lifetime burnup. The curves themselves are valid for a lifetime burnup of up to 34.0 EFPY and will not change before that time."

Question NL-04-073-PVM-3:

Note 1 of Table 5.9-3 of the application report references RG 1.99, Revision 2, to indicate the justification for a 1/5 thickness (T) defect for the outlet nozzle to shell weld based on the use of highly reliable non-destructive inspection techniques that assure the capability of detecting such a flaw and that the probability of detecting a flaw 0.50 inch into the base material of the nozzle inner radius is greater than 99.9%. Section 5.9.3.2 of the licensee's submittal indicates Welding Research Bulletin 175, "PVRC [Pressure Vessel Research Committee] Recommendations on Toughness Requirements for Ferritic Materials," provides procedures for considering postulated defect sizes smaller than 1/4 T. RG 1.99, Revision 2 does not discuss flaw size and reliability of non-destructive inspection.

a. Identify the references for the report that justifies the use of a 1/5 T defect for the outlet nozzle to shell weld. Identify whether the analysis satisfies the requirements of Article G-2220 of Section XI of the ASME Code.

b. Describe the non-destructive inspection technique which will be utilized to examine the nozzle inner radius at the outlet nozzle to shell region.

c. Provide the data and describe the analysis that the probability of detecting a flaw with a depth of 0.5-inch is greater than 99.9%.

Response NL-04-073-PVM-3a:

For IP3, Note 1 of Table 5.9-3 does not refer to RG 1.99. Therefore this RAI does not apply to IP3.

Response NL-04-073-PVM-3b:

The reactor vessel nozzle inside radius (Welds 21IR through 28IR), are ASME Category B-D, Item B3.100. These locations require volumetric examination as per ASME Section XI 1989 Edition, no Addenda. Based on the excellent operating history of the Indian Point Unit 3 reactor vessel, as well as the reliability of UT examinations previously conducted, Entergy is adopting Code Case N-648-1 to perform a VT-1 visual examination in lieu of a volumetric exam for the Third 10-Year Interval, which ends in July 2009. Code Case N-648-1 was approved in Regulatory Guide 1.147 with a condition. Implementation of the Code Case, as approved in the Reg. Guide, entails performing a visual examination with enhanced magnification that has a resolution sensitivity to detect a one mil width wire or crack, utilizing the allowable flaw length criteria of Table IWB-3512-1 with limiting assumptions on the flaw aspect ratio.

Response NL-04-073-PVM-3c:

The probability of detection (POD) of a flaw using volumetric inspections in the reactor vessel nozzle inner radius is provided in the following reference: "Proceedings of ASME 2001 Pressure Vessels and Piping Conference, Atlanta, GA, "Technical Basis for Elimination of Reactor Vessel Nozzle Inner Radius Inspections", W. H. Bamford, et. al., July 2001". Based on Figure NL-04-073-PVM-3-1 shown below, the probability of detection for a flaw with depth equal to 0.5 inch into the base metal is approximately 99.9%.
The following text, which describes the analysis, was taken directly from that document.

Nozzle Inner Radius Examination Capability from the Inside Surface

Regulatory Guide 1.150 stimulated improvement in examinations of the clad to base-metal interface. The same techniques have been used for more than 10 years for Nozzle inner radius examinations performed from the bore (PWR case). Capability demonstrations for the clad to base-metal interface have been conducted at the EPRI NDE Center since 1983. These demonstrations were performed primarily for the belt-line region. However, the same techniques are used for both the vessel belt-line and the nozzle from the inside surface.

PDI Appendix VIII demonstrations were initiated in 1994, for Supplements 4 and 6. Vendors performing these PDI demonstrations found that few if any changes were required to achieve high success rates for the clad to base-metal interface, Supplement 4.

Five inspection vendors and more than 50 personnel have completed Appendix VIII Supplement 4, clad to base metal demonstrations. In this time no individual, even those who failed the test, failed to detect cracks larger than approximately 0.25 inch. Sizing

capability was also very good. The mean sizing error was 0.12 inch RMS. Sizing errors for the lead personnel, who normally make acceptability decisions, were even better, at 0.08 inch RMS.

Figure NL-04-073-PVM-3-1 depicts the expected rejection probability as a function of flaw size. Correct rejection probability considers the detection capability and the sizing capability for flaws. For example, as shown in Figure NL-04-073-PVM-3-1, the probability of detecting and rejecting a flaw 0.25 inch into the base material is equal to or greater than 90%.

Examinations using modern technology have been performed industry-wide since 1989, and so these examinations have been compiled in Table NL-04-073-PVM-3-1.
In addition to these examinations, some 2500 examinations have been completed using earlier technologies, with no indications ever being discovered.

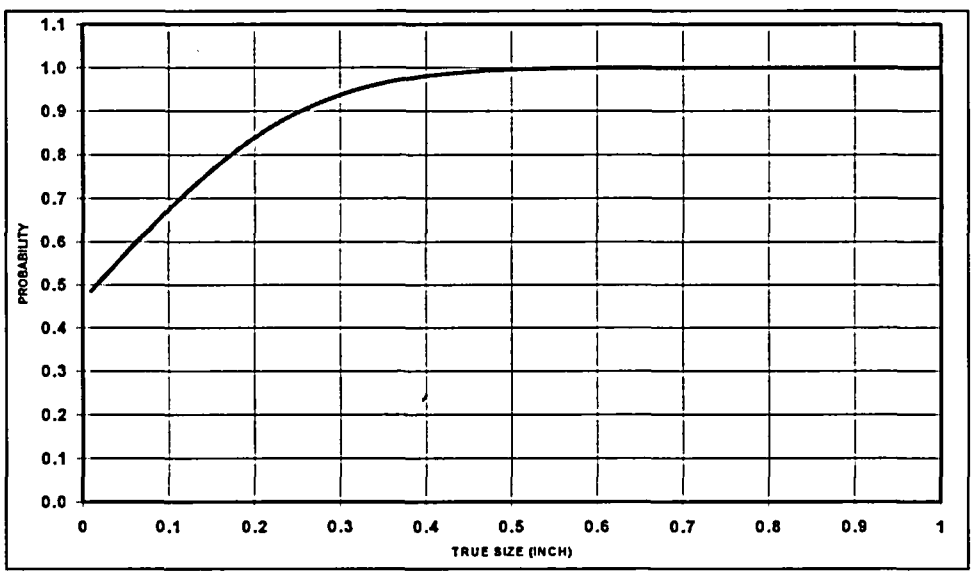

Figure NL-04-073-PVM-3-1
Probability of Correct Rejection
Sizing, Std. Dev. = 0.12, Acceptable Flaw Size 0.15

Table NL-04-073-PVM-3-1. Inspection Results Using Modern Technology

Inspection Agency	Number of Nozzles Inspected	Indications
Westinghouse	210	0
IHI – Southwest	196	0
Framatome Technologies	148	0
Total	554	0

Question NL-04-073-PVM-4:

Table 5.9-5 of the application report indicates a flaw depth of 0.50-inch for safety and relief nozzle (corner) and 0.15-inch for upper shell meet the fracture toughness requirements of Appendix G of the ASME Code (NOTE: Table 5.9-5 indicates K_I/K_{IR} is 0.94 for the safety and relief nozzle (corner) and 1.0 for the upper shell).

a. Describe the analysis that determined a 0.50-inch flaw depth for the safety and relief nozzle (corner) and a 0.15-inch flaw depth for the upper shell will meet the fracture toughness requirements of Appendix G of the ASME Code.

b. Identify whether the analysis satisfies the requirements of Article G-2220 of Section XI of the ASME Code. Does the analysis for the safety and relief nozzles and upper shell satisfy these structural factors?

c. Describe the non-destructive examination technique which will be utilized to inspect the safety and relief nozzles and upper shell.

d. Provide the data, a description of the analysis, and the probability of detection of flaws with a depth of 0.50-inch for the safety and relief nozzle and 0.15-inch for the upper shell.

Response NL-04-073-PVM-4a:

In order to quantify the acceptable flaw size for the IP3 pressurizer upper shell and the safety and relief nozzles, an analysis using the ASME Code Section III, Appendix G requirements was performed. This analysis was recently revised. The fracture mechanics analysis for the IP3 pressurizer upper shell has been revised to consider an updated technical evaluation of the spray characteristic of the inadvertent spray transient based on tests and analytical solutions that showed the spray droplet envelope remains well removed from the pressurizer wall at pressures above 1030 psia. This fracture mechanics analysis also included modified through-wall stresses for the governing location. Since the section thickness for the upper shell is 4.1875 inches, a 1/4t (1.05 inches) deep defect was conservatively postulated per Paragraph G-2120 of the ASME Code, Appendix G 1998 Edition. The analysis for the safety and relief nozzle was also revised using modified through-wall stresses. A defect of 1 inch was again postulated since the section thickness of the governing location for the pressurizer safety and relief nozzle is less than 4 inches. The results show that the maximum stress intensity factor K_I for the governing transient is less than K_{IR}. Therefore, it is concluded that the Indian Point Unit 3 Pressurizer Upper Shell and Safety & Relief Nozzle are in compliance with the ASME Code, Section III, Appendix G 1998 Edition requirements for the SPU conditions. Since the postulated flaw sizes meet the requirements of Appendix G (1/4t or 1 inch), the ASME Code does not require specific demonstration that the flaw sizes can be detected with the use of highly reliable non-destructive inspection techniques. The results are summarized below.

Fracture Integrity Evaluation Summary Indian Point Unit 3 – Pressurizer Upper Shell and Safety & Relief Nozzle			
Location	**Governing Transient**	**Flaw Depth (inch)**	**K_I/K_{IR}**
Upper Shell	Loss of Load	1/4t (1.05)	0.73
Safety & Relief Nozzle	Loss of Load	1	0.66

Response NL-04-073-PVM-4b:

Yes, the analysis performed satisfies the requirements of Article G-2220 of Section XI of the ASME Code. Structural factors, i.e., a factor of 2 for normal and upset conditions, and a factor of 1.5 for test conditions, were applied to the primary stresses as specified in Section XI of the ASME Code.

Response NL-04-073-PVM-4c:

Response to be provided later.

Response NL-04-073-PVM-4d:

Since the postulated flaw sizes meet the requirements of Appendix G (1/4t or 1 inch), the ASME Code does not require specific demonstration that the flaw sizes can be detected with the use of highly reliable non-destructive inspection techniques.

Question NL-04-073-RSA-1:

Provide a table listing the computer codes and evaluation methodologies used in the re-analysis of non-loss-of-coolant accident (non-LOCA) transients. The table should include the NRC-approval status, conditions and limitations, and how they are satisfied for SPU application at IP2.

Response NL-04-073-RSA-1:

The computer codes and methodologies used in each of the non-LOCA transient analyses are listed in Table NL-04-073-RSA-1-1. As indicated by Tables NL-04-073-RSA-1-2 through NL-04-073-RSA-1-5 and NL-04-073-RSA-1-9, the NRC staff has approved all codes that were used in the non-LOCA transient analyses for IP3. As for the applicable non-LOCA transient analysis methodologies, these have been reviewed and approved by the NRC staff via transient-specific topical reports (WCAPs) and/or through the review and approval of plant-specific safety analysis reports. Code and methodology restrictions are specified in applicable SERs. Tables NL-04-073-RSA-1-2 through NL-04-073-RSA-1-6 and NL-04-073-RSA-1-9 provide SER conditions and restriction information for computer codes and application for events listed in Table NL-04-073-RSA-1-1. Similarly, Tables NL-04-073-RSA-1-7 and NL-04-073-RSA-1-8 identify the SER conditions and restrictions for each analysis methodology that has an approved topical report associated with it. Tables NL-04-073-RSA-1-2 through NL-04-073-RSA-1-9 also provide the justifications for how each SER condition/restriction is satisfied in the IP3 analyses.

Table NL-04-073-RSA-1-1: Computer Codes and Methodologies Used in Non-LOCA Transient Analyses for IP3

UFSAR Section	Event Description	Applicable Code(s)	Applicable Methodology
14.1.1	Uncontrolled RCCA Withdrawal from a Subcritical or Low-Power Startup Condition	TWINKLE FACTRAN VIPRE	SAR submittals
14.1.2	Uncontrolled RCCA Withdrawal at Power	RETRAN	SAR submittals
14.1.3/ 14.1.4	RCCA Drop/Misoperation	LOFTRAN ANC VIPRE	WCAP-11394-P-A
14.1.5	Chemical and Volume Control System Malfunction	N/A	SAR submittals
14.1.6	Loss of Reactor Coolant Flow	RETRAN VIPRE	SAR submittals
14.1.6	Locked Rotor	RETRAN VIPRE	SAR submittals
14.1.7	Startup of an Inactive Reactor Coolant Loop	N/A	Event precluded by Tech Specs
14.1.8	Loss of External Electrical Load	RETRAN	SAR submittals
14.1.9	Loss of Normal Feedwater	RETRAN	SAR submittals
14.1.10	Excessive Heat Removal Due to Feedwater System Malfunctions	RETRAN VIPRE	SAR submittals
14.1.11	Excessive Load Increase Incident	N/A	SAR submittals
14.1.12	Loss of AC Power to the Plant Auxiliaries	RETRAN	SAR submittals
14.2.5	Steam Line Break	RETRAN ANC VIPRE	SAR submittals
14.2.6	Rupture of a Control Rod Drive Mechanism Housing (RCCA Ejection)	TWINKLE FACTRAN	WCAP-7588, Rev. 1-A
N/A	Anticipated Transients Without Scram	LOFTRAN	NS-TMA-2182

Code Approval	Methodology Approvals
TWINKLE WCAP-7979-P-A	As applicable to Transient/Code
FACTRAN WCAP-7908-A	As applicable to Transient/Code
LOFTRAN WCAP-7907-P-A	As applicable to Transient/Code
RETRAN (EPRI) NP-1850-CCM-A	WCAP-14882-P-A
VIPRE (EPRI) NP-2511-CCM-A	WCAP-14565-P-A

Table NL-04-073-RSA-1-2: Approval Status & SER Requirements for Non-LOCA Transient Analysis Codes – RETRAN

Computer Code: **Transients:**	RETRAN Various
Computer Code Acceptance:	RETRAN-02 Mod 005.0, Thadani (NRC), Boatwright (Texas Utilities Electric Co.), November 1, 1991 (Code Restrictions addressed in WCAP-14882-P-A).
Licensing Topical Report:	WCAP-14882-P-A, "RETRAN-02 Modeling and Qualification for Westinghouse Pressurized Water Reactor Non-LOCA Safety Analyses," April 1999.
Date of NRC Acceptance:	February 11, 1999 (SER from F. Akstulewicz (NRC) to H. Sepp (Westinghouse))

Safety Evaluation Report (SER) Conditions & Justification for IP3

1.	***"The transients and accidents that Westinghouse proposes to analyze with RETRAN are listed in this SER (Table 1) and the NRC staff review of RETRAN usage by Westinghouse was limited to this set. Use of the code for other analytical purposes will require additional justification."*** **Justification** The transients listed in Table 1 of the SER are: *1 Feedwater system malfunctions,* *2 Excessive increase in steam flow,* *3 Inadvertent opening of a steam generator relief or safety valve,* *4 Steam line break,* *5 Loss of external load/turbine trip,* *6 Loss of offsite power,* *7 Loss of normal feedwater flow,* *8 Feedwater line rupture,* *9 Loss of forced reactor coolant flow,* *10 Locked reactor coolant pump rotor/sheared shaft,* *11 Control rod cluster withdrawal at power,* *12 Dropped control rod cluster/dropped control bank,* *13 Inadvertent increase in coolant inventory,* *14 Inadvertent opening of a pressurizer relief or safety valve,* *15 Steam generator tube rupture.* *The transients analyzed for IP3 using RETRAN are:* *Uncontrolled RCCA withdrawal at power (UFSAR 14.1.2), (#11 above)* *Loss of reactor coolant flow (UFSAR 14.1.6), (#9 above)* *Locked rotor (UFSAR 14.1.6), (#10 above)* *Loss of external electrical load (UFSAR 14.1.8), (#5 above)* *Loss of normal feedwater (UFSAR 14.1.9), (#7 above)* *Excessive heat removal due to feedwater system malfunctions (UFSAR 14.1.10), (#1 above)* *Loss of AC power to the plant auxiliaries (UFSAR 14.1.12), (#6 above)* *Steam line break (UFSAR 14.2.5) (#4 above)* Each transient analyzed for IP3 using RETRAN is included in Table 1 of WCAP-14882-P-A.
2.	***"WCAP-14882 describes modeling of Westinghouse designed 4-, 3, and 2-loop plants of the type that are currently operating. Use of the code to analyze other designs, including the Westinghouse AP600, will require additional justification."***

Table NL-04-073-RSA-1-2: Approval Status & SER Requirements for Non-LOCA Transient Analysis Codes – RETRAN	
	Justification IP3 is a 4-loop Westinghouse-designed plant that was "currently operating" at the time the SER was written (February 11, 1999). Therefore, additional justification is not required.
3.	***"Conservative safety analyses using RETRAN are dependent on the selection of conservative input. Acceptable methodology for developing plant-specific input is discussed in WCAP-14882 and in Reference 14 [WCAP-9272-P-A]. Licensing applications using RETRAN should include the source of and justification for the input data used in the analysis."***
	Justification The input data used in the RETRAN analyses performed by Westinghouse came from both Entergy Nuclear Northeast (ENN) and Westinghouse sources. A quality assurance program is in place that required documentation of the input data sources and justification for use. Consistent with the Westinghouse Reload Evaluation Methodology described in WCAP-9272-P-A, the safety analysis input values used in the IP3 analyses were selected to conservatively bound the values expected in subsequent operating cycles.

Table NL-04-073-RSA-1-3: Approval Status & SER Requirements for Non-LOCA Transient Analysis Codes – TWINKLE	
Computer Code:	TWINKLE
Licensing Topical Report:	WCAP-7979-P-A, "TWINKLE – A Multidimensional Neutron Kinetics Computer Code," January 1975.
Date of NRC Acceptance:	July 29, 1974 (SER from D. B. Vassallo (U.S. Atomic Energy Commission) to R. Salvatori (Westinghouse))
Safety Evaluation Report (SER) Conditions & Justification for IP3	
	There are no conditions, restrictions, or limitations cited in the TWINKLE SER.
	Justification Not Applicable

Table NL-04-073-RSA-1-4: Approval Status & SER Requirements for Non-LOCA Transient Analysis Codes – FACTRAN

Computer Code:	FACTRAN
Licensing Topical Report:	WCAP-7908-A, "FACTRAN – A FORTRAN IV Code for Thermal Transients in a UO_2 Fuel Rod," December 1989.
Date of NRC Acceptance:	September 30, 1986 (SER from C. E. Rossi (NRC) to E. P. Rahe (Westinghouse))

Safety Evaluation Report (SER) Conditions & Justification for IP3	
1.	***"The fuel volume-averaged temperature or surface temperature can be chosen at a desired value which includes conservatisms reviewed and approved by the NRC."***
	Justification The FACTRAN code was used in the analyses of the following transients for IP3: Uncontrolled RCCA Withdrawal from a Subcritical or Low Power Condition (UFSAR 14.1.1) and RCCA Ejection (UFSAR 14.2.6). Conservative initial fuel temperatures were used as FACTRAN input in the RCCA Ejection analyses. The bounding fuel temperatures for these transients were calculated using the PAD 4.0 computer code (see WCAP-15063-P-A). As indicated in WCAP-15063-P-A, the method of determining uncertainties for PAD 4.0 fuel temperatures has been approved by the NRC.
2.	***"Table 2 presents the guidelines used to select initial temperatures."***
	Justification In summary, Table 2 of the SER specifies that the initial fuel temperatures assumed in the FACTRAN analyses of the following transients should be "High" and include uncertainties: Loss of Flow, Locked Rotor, and Rod Ejection. As discussed above, fuel temperatures were used as input to the FACTRAN code in the RCCA Ejection analyses for IP3. The assumed fuel temperatures, which were based on bounding temperatures calculated using the PAD 4.0 computer code (see WCAP-15063-P-A), include uncertainties and are conservatively high.
3.	***"The gap heat transfer coefficient may be held at the initial constant value or can be varied as a function of time as specified in the input."***
	Justification The gap heat transfer coefficients applied in the FACTRAN analyses are consistent with SER Table 2. For the RCCA Withdrawal from a Subcritical Condition transient, the gap heat transfer coefficient is kept at a conservative constant value throughout the transient; a high constant value is assumed to maximize the peak heat flux (for DNB concerns) and a low constant value is assumed to maximize transient fuel temperatures. For the RCCA Ejection transients, the initial gap heat transfer coefficient is based on the predicted initial fuel surface temperature, and is ramped rapidly to a very high value at the beginning of the transient to simulate clad collapse onto the fuel pellet.
4.	***"...the Bishop-Sandberg-Tong correlation is sufficiently conservative and can be used in the FACTRAN code. It should be cautioned that since these correlations are applicable for local conditions only, it is necessary to use input to the FACTRAN code which reflects the local conditions. If the input values reflecting average conditions are used, there must be sufficient conservatism in the input values to make the overall method conservative."***
	Justification Local conditions related to temperature, heat flux, peaking factors and channel information were input to FACTRAN for each transient analyzed for IP3 (RCCA Withdrawal from a Subcritical Condition (UFSAR 14.1.1) and RCCA Ejection (UFSAR 14.2.6)).

Table NL-04-073-RSA-1-4: Approval Status & SER Requirements for Non-LOCA Transient Analysis Codes – FACTRAN

Computer Code:	FACTRAN
Licensing Topical Report:	WCAP-7908-A, "FACTRAN – A FORTRAN IV Code for Thermal Transients in a UO_2 Fuel Rod," December 1989.
Date of NRC Acceptance:	September 30, 1986 (SER from C. E. Rossi (NRC) to E. P. Rahe (Westinghouse))

Safety Evaluation Report (SER) Conditions & Justification for IP3	
5.	***"The fuel rod is divided into a number of concentric rings. The maximum number of rings used to represent the fuel is 10. Based on our audit calculations we require that the minimum of 6 should be used in the analyses."***
	Justification At least 6 concentric rings were assumed in FACTRAN for each transient analyzed for IP3 (RCCA Withdrawal from a Subcritical Condition (UFSAR 14.1.1) and RCCA Ejection (UFSAR 14.2.6)).
6.	***"Although time-independent mechanical behavior (e.g., thermal expansion, elastic deformation) of the cladding are considered in FACTRAN, time-dependent mechanical behavior (e.g., plastic deformation) is not considered in the code. ...for those events in which the FACTRAN code is applied (see Table 1), significant time-dependent deformation of the cladding is not expected to occur due to the short duration of these events or low cladding temperatures involved (where DNBR Limits apply), or the gap heat transfer coefficient is adjusted to a high value to simulate clad collapse onto the fuel pellet."***
	Justification The two transients that were analyzed with FACTRAN for IP3 (RCCA Withdrawal from a Subcritical Condition (UFSAR 14.1.1) and RCCA Ejection (UFSAR 14.2.6)) are included in the list of transients provided in Table 1 of the SER; each of these transients is of short duration. For the RCCA Withdrawal from a Subcritical Condition transient, relatively low cladding temperatures are involved, and the gap heat transfer coefficient is kept constant throughout the transient. For the RCCA Ejection transient, a high gap heat transfer coefficient is applied to simulate clad collapse onto the fuel pellet. The gap heat transfer coefficients applied in the FACTRAN analyses are consistent with SER Table 2.
7.	***"The one group diffusion theory model in the FACTRAN code slightly overestimates at beginning of life (BOL) and underestimates at end of life (EOL) the magnitude of flux depression in the fuel when compared to the LASER code predictions for the same fuel enrichment. The LASER code uses transport theory. There is a difference of about 3 percent in the flux depression calculated using these two codes. When [T(centerline) – T(Surface)] is on the order of 3000°F, which can occur at the hot spot, the difference between the two codes will give an error of 100°F. When the fuel surface temperature is fixed, this will result in a 100°F lower prediction of the centerline temperature in FACTRAN. We have indicated this apparent nonconservatism to Westinghouse. In the letter NS-TMA-2026, dated January 12, 1979, Westinghouse proposed to incorporate the LASER-calculated power distribution shapes in FACTRAN to eliminate this non-conservatism. We find the use of the LASER-calculated power distribution in the FACTRAN code acceptable."***
	Justification The condition of concern (T(centerline – T(surface) on the order of 3000°F) is expected for transients that reach, or come close to, the fuel melt temperature. As this applies only to the RCCA ejection transient, the LASER-calculated power distributions were used in the FACTRAN analysis of the RCCA ejection transient for IP3.

Table NL-04-073-RSA-1-5: Approval Status & SER Requirements for Non-LOCA Transient Analysis Codes – LOFTRAN

Computer Code:	LOFTRAN
Licensing Topical Report:	WCAP-7907-P-A, "LOFTRAN Code Description," April 1984.
Date of NRC Acceptance:	July 29, 1983 (SER from C. O. Thomas (NRC) to E. P. Rahe (Westinghouse))
Safety Evaluation Report (SER) Conditions & Justification for IP3	
1.	***"LOFTRAN is used to simulate plant response to many of the postulated events reported in Chapter 14 of FSARs, to simulate anticipated transients without scram, for equipment sizing studies, and to define mass/energy releases for containment pressure analysis. The Chapter 14 events analyzed with LOFTRAN are:*** ***1- Feedwater System Malfunction*** ***2- Excessive Increase in Steam Flow*** ***3- Inadvertent Opening of a Steam Generator Relief or Safety Valve*** ***4- Steamline Break*** ***5- Loss of External Load*** ***6- Loss of Offsite Power*** ***7- Loss of Normal Feedwater*** ***8- Feedwater Line Rupture*** ***9- Loss of Forced Reactor Coolant Flow*** ***10- Locked Pump Rotor*** ***11- Rod Withdrawal at Power*** ***12- Rod Drop*** ***13- Startup of an Inactive Pump*** ***14- Inadvertent ECCS Actuation*** ***15- Inadvertent Opening of a Pressurizer Relief or Safety Valve*** ***This review is limited to the use of LOFTRAN for the licensee safety analyses of the Chapter 15 events listed above, and for a steam generator tube rupture..."***
	Justification The LOFTRAN code was only used in the analysis of the Rod Drop transient (USAR 14.1.3) for IP3. As this transient matches #12 of the transients listed above.

Table NL-04-073-RSA-1-6: Approval Status & SER Requirements for Core Analysis Code – VIPRE

Computer Code:	VIPRE
Licensing Topical Report:	WCAP-14565-P-A/WCAP-15306-NP-A, VIPRE-01 *Modeling and Qualification for Pressurized Water Reactor Non-LOCA Thermal-Hydraulic Safety Analysis*, Y. Sung, et al., October 1999.
Date of NRC Acceptance:	*January 19, 1999 (SER* from T. H. Essig (NRC) to H. Sepp (Westinghouse),.
Safety Evaluation Report (SER) Conditions & Justification for IP3	
1.	***"Selection of the appropriate CHF correlation, DNBR limit, engineered hot channel factors for enthalpy rise and other fuel-dependent parameters for a specific plant application should be justified with each submittal."*** **Justification** The NRC-approved WRB-1 correlation was used in the DNBR analyses. Justification of the WRB-1 correlation limit of 1.17 with the VIPRE code is provided in WCAP-14565-P-A. For the IP3 SPU DNBR analyses, the plant specific hot channel factors for enthalpy rise and other fuel-dependent parameters that have been previously approved by the NRC have been assumed in these analyses.
2.	***"Reactor core boundary conditions determined using other computer codes are generally input into VIPRE for reactor transient analyses. These inputs include core inlet coolant flow and enthalpy, core average power, power shape and nuclear peaking factors. These inputs should be justified as conservative for each use of VIPRE."*** **Justification** The core boundary conditions for the VIPRE calculations are all generated from NRC-approved methodologies and computer codes, such as RETRAN and ANC. Conservative reactor core boundary conditions were justified for use as input to VIPRE as discussed in the safety evaluations. Continued applicability of the input assumptions is verified on a cycle-by-cycle basis using the Westinghouse reload methodology described in WCAP-9272/9273.
3.	***"The NRC Staff's generic SER for VIPRE (Reference 2 of the SER) set requirements for use of new CHF correlations with VIPRE. Westinghouse has met these requirements for using WRB-1, WRB-2 and WRB-2M correlations. The DNBR limit for WRB-1 and WRB-2 is 1.17. The WRB-2M correlation has a DNBR limit of 1.14. Use of other CHF correlations not currently included in VIPRE will require additional justification."*** **Justification** Justification on use of the WRB-1 correlation with the VIPRE code is provided in WCAP-14565-P-A. There is no new DNB correlation used for the IP3 SPU.

Table NL-04-073-RSA-1-6: Approval Status & SER Requirements for Core Analysis Code – VIPRE

Computer Code:	VIPRE
Licensing Topical Report:	WCAP-14565-P-A/WCAP-15306-NP-A, VIPRE-01 *Modeling and Qualification for Pressurized Water Reactor Non-LOCA Thermal-Hydraulic Safety Analysis*, Y. Sung, et al., October 1999.
Date of NRC Acceptance:	*January 19, 1999 (SER* from T. H. Essig (NRC) to H. Sepp (Westinghouse),.

Safety Evaluation Report (SER) Conditions & Justification for IP3

4.	***"Westinghouse proposes to use the VIPRE code to evaluate fuel performance following postulated design-basis accidents, including beyond-CHF heat transfer conditions. These evaluations are necessary to evaluate the extent of core damage and to ensure that the core maintains a coolable geometry in the evaluation of certain accident scenarios. The NRC Staff's generic review of VIPRE (Reference 2 of the SER) did not extent to post CHF calculations. VIPRE does not model the time-dependent physical changes that may occur within the fuel rods at elevated temperatures. Westinghouse proposes to use conservative input in order to account for these effects. The NRC Staff requires that appropriate justification be submitted with each usage of VIPRE in the post-CHF region to ensure that conservative results are obtained."*** **Justification** For the IP3 SPU analyses, the use of VIPRE in the post-CHF region is limited to the peak clad temperature calculations for the locked rotor transient. The calculation demonstrated that the peak clad temperature in the reactor core is well below the allowable limit to prevent clad embrittlement. VIPRE modeling of the fuel rod is consistent with the model described in WCAP-14565-P-A and included the following conservative assumptions: • DNB was assumed to occur at the beginning of the transient; • Film boiling was calculated using the Bishop-Sandberg-Tong correlation; • The Baker-Just correlation accounted for heat generation in fuel cladding due to zirconium-water reaction. Conservative results were further ensured with the following inputs: • Fuel rod input based on the maximum fuel temperature at the given power; • The hot spot power factor was equal to or greater than the design linear heat rate; • Uncertainties were applied to the initial operating conditions in the limiting direction.

Table NL-04-073-RSA-1-7: Approval Status & SER Requirements for Non-LOCA Transient Analysis Methods – Dropped Rod

Transient:	RCCA Misalignment (Dropped Rod)
Licensing Topical Report:	WCAP-11394-P-A, "Methodology for the Analysis of the Dropped Rod Event," January 1990.
Date of NRC Acceptance:	October 23, 1989 (SER from A. C. Thadani (NRC) to R. A. Newton (WOG))
Safety Evaluation Report (SER) Conditions & Justification for IP3	
1.	***"The Westinghouse analysis, results and comparisons are reactor and cycle specific. No credit is taken for any direct reactor trip due to dropped RCCA(s). Also, the analysis assumes no automatic power reduction features are actuated by the dropped RCCA(s). A further review by the staff (for each cycle) is not necessary, given the utility assertion that the analysis described by Westinghouse has been performed and the required comparisons have been made with favorable results."***
	Justification For the reference cycle assumed in the IP3 SPU program, it is affirmed that the methodology described in WCAP-11394-P-A was performed and the required comparisons have been made with acceptable results (DNB limits are not exceeded).

Table NL-04-073-RSA-1-8: Approval Status & SER Requirements for Non-LOCA Transient Analysis Methods – RCCA Ejection	
Transient:	RCCA Ejection
Licensing Topical Report:	WCAP-7588 Rev. 1-A, "An Evaluation of the Rod Ejection Accident in Westinghouse Pressurized Water Reactors Using Spatial Kinetics Methods," January 1975.
Date of NRC Acceptance:	August 28, 1973 (SER from D. B. Vassallo (AEC) to R. Salvatori (Westinghouse))
Safety Evaluation Report (SER) Conditions & Justification for IP3	
1.	***"The staff position, as well as that of the reactor vendors over the last several years, has been to limit the average fuel pellet enthalpy at the hot spot following a rod ejection accident to 280 cal/gm. This was based primarily on the results of the SPERT tests which showed that, in general, fuel failure consequences for UO_2 have been insignificant below 300 cal/gm for both irradiated and unirradiated fuel rods as far as rapid fragmentation and dispersal of fuel and cladding into the coolant are concerned. In this report, Westinghouse has decreased their limiting fuel failure criterion from 280 cal/gm (somewhat less than the threshold of significant conversion of the fuel thermal energy to mechanical energy) to 225 cal/gm for unirradiated rods and 200 cal/gm for irradiated rods. Since this is a conservative revision on the side of safety, the staff concludes that it is an acceptable fuel failure criterion."***
	Justification The maximum fuel pellet enthalpy at the hot spot calculated for each IP3-specific RCCA Ejection case is less than 200 cal/gm. These results satisfy the fuel failure criterion accepted by the staff.
2.	***"Westinghouse proposes a clad temperature limitation of 2700°F as the temperature above which clad embrittlement may be expected. Although this is several hundred degrees above the maximum clad temperature limitation imposed in the AEC ECCS Interim Acceptance Criteria, this is felt to be adequate in view of the relatively short time at temperature and the highly localized effect of a reactivity transient."***
	Justification As discussed in Westinghouse letter NS-NRC-89-3466 written to the NRC (W. J. Johnson to R. C. Jones, dated October 23, 1989), the 2700°F clad temperature limit was historically applied by Westinghouse to demonstrate that the core remains in a coolable geometry during an RCCA ejection transient. This limit was never used to demonstrate compliance with fuel failure limits and is no longer used to demonstrate core coolability. The RCCA ejection acceptance criteria applied by Westinghouse to demonstrate long term core coolability and compliance with applicable offsite dose requirements are those defined in the suggested revisions to the IP3 UFSAR Section 14.2.6 (fuel pellet enthalpy, RCS pressure, and fuel melt).

Table NL-04-073-RSA-1-9: Approval Status & SER Requirements for Core Analysis Codes – ANC

Computer Code:	ANC
Licensing Topical Report:	WCAP-10965-P-A, "ANC: A Westinghouse Advanced Nodal Computer Code," September 1986.
Date of NRC Acceptance:	June 23, 1986 (SER from C. Berlinger (NRC) to E. P. Rahe (Westinghouse))
Safety Evaluation Report (SER) Conditions & Justification for IP2	
1.	***"Although there are no conditions, restrictions, or limitations explicitly cited in the ANC SER, the SER does conclude that 'the ANC code provides an accurate calculation of core reactivity, reactivity coefficients critical boron, rod worths and core power distribution for use in design and safety analyses.'"*** **Justification** In support of the IP2 SPU, the ANC code was used to calculate power distributions for normal (design) and off-normal (safety analysis) conditions, and was also used for reactivity calculations. As these code applications are consistent with those listed in the SER, additional justification is not required.

Question NL-04-073-RSA-2:

In its re-analysis of the non-LOCA transients for the SPU, the NRC-approved RETRAN Code (WCAP-14482-P-A) was used for the first time.

a. Explain the quality assurance process used to verify RETRAN was adequately used at IP2.

b. Show that the IP2 nodalization modeling is consistent with the Westinghouse 4-loop plant nodalization model of WCAP-14882-P-A. If the modeling of IP2 deviated from the plant model in the WCAP-14882-P-A, explain why and how these deviations were addressed.

Response NL-04-073-RSA-2a:

The Westinghouse Quality Assurance Program computer software development, maintenance and configuration control process is in accordance with procedures and instructions that comply with ASME NQA-1 and ISO 9001 and is required for all safety-related applications.

The RETRAN-02 computer code approved for use in performing Westinghouse safety analyses (WCAP-14882-P-A) is validated and documented under the Westinghouse software configuration control process governed by the NRC-Approved Westinghouse Quality Management System (QMS).

When documenting the non-LOCA safety analyses, analysts document the software code input and version used in performing the event analysis calculations. The event analysis verification includes confirming that the validated/verified version of RETRAN-02 is appropriately applied to the event analysis calculations performed for each event as was done for IP3.

Response NL-04-073-RSA 2b:

A pre-processor is used to generate a RETRAN deck with the modeling scheme (i.e. nodalization) approved for use in WCAP-14882-P-A. The pre-processor computer code is validated and documented under the Westinghouse software configuration control process governed by the NRC-Approved Westinghouse Quality Management System (QMS).

In performing the IP3 non-LOCA safety analyses, verified/validated versions of the RETRAN-02 pre-processor and RETRAN-02 computer codes were documented and used based on IP3 plant specific data. By using controlled and configured versions of RETRAN-02 and the RETRAN-02 pre-processor computer codes, the 4-loop modeling scheme used in performing the IP3 non-LOCA safety analyses calculations are consistent with the 4-loop nodalization model approved for use in WCAP-14882-P-A. Therefore, the IP3 non-LOCA analyses did not deviate from the plant model documented in WCAP-14882-P-A.

Question NL-04-073-RSA-3:

The NRC staff is interested in the degradation of margin to the regulatory limits for the SPU at IP2. With regard to the non-LOCA transient re-analyses, provide a table listing each event and its corresponding acceptance criteria. In this table, also quantify the change in calculated results relative to current operation.

Response NL-04-073-RSA-3:

The table listing each event and its corresponding acceptance criteria are provided in Table 6.3-18 of WCAP-16212-P (proprietary) and WCAP-16212-NP (non-proprietary).

Question NL-04-073-RSA-4:

In Table 2.1-2 the application report, the core bypass flow for the SPU is the same as the current plant parameter. Note 3 of this table states that the core bypass flow includes 2.0 percent due to thimble plug removal and intermediate flow mixing (IFM) grids. Provide an explanation for whether the 2.0 percent value was accounted for previously, and if not, how is it accounted for in the uprated power condition.

Response NL-04-073-RSA-4:

This question does not apply to IP3.

Question NL-04-073-RSA-5:

Provide the technical justification for the reduction in the design limit departure from nucleate boiling ratio (DNBR) from its current value of 1.26 to the SPU value of 1.22 for both the typical flow channel and the thimble flow channel.

Response NL-04-073-RSA-5:

This question does not apply to IP3.

Question NL-04-073-RSA-6:

As a result of the increased core thermal power for the SPU, the safety analysis limit DNBR and core thermal safety limits were revised. Specifically, the safety analysis limit (SAL) DNBR was revised from [ ]^{a,c} to [ ]^{a,c}. Provide the technical justification for the revision of the DNBR from [ ]^{a,c} to [ ]^{a,c}.

Response NL-04-073-RSA-6:

The question and response this question contains proprietary information. The proprietary and non-proprietary versions of the response are provided in Attachments 3 and 4 of this letter, respectively.

Question NL-04-073-RSA-7:

Provide a table listing the DNBR margin summary. The values would include the DNBR correlation limit, DNBR design limit, SAL DNBR, DNBR retained margin, rod bow DNBR penalty, transition core DNBR penalty, and available DNBR margin left after the uprate.

Response NL-04-073-RSA-7:

The response this question contains proprietary information. The proprietary and non-proprietary versions of the response are provided in Attachments 3 and 4 of this letter, respectively.

Question NL-04-073-RSA-8:

In the uncontrolled rod cluster control assembly (RCCA) withdrawal from a subcritical or low power startup condition transient, the minimum DNBR remained above the SAL. Provide the DNBR quantitative result which shows the minimum DNBR remained above the SAL for the SPU analysis.

Response NL-04-073-RSA-8:

The table listing each event and its corresponding acceptance criteria are provided in Table 6.3-18 of WCAP-16212-P (proprietary) and WCAP-16212-NP (non-proprietary).

Question NL-04-073-RSA-9:

Regarding the re-analysis of the uncontrolled RCCA withdrawal at power transient:

a. RETRAN (a system code) rather than a subchannel code such as VIPRE is used for the DNBR analysis. The use of the RETRAN DNBR model requires certain user-input values (not listed here because this is shown as proprietary on page 55 of WCAP-14882-P-A). Discuss how this user-input was determined for IP2.

b. One of the acceptance criteria for this event is that fuel centerline temperature remains less than the melting temperature. Provide the quantitative result which demonstrates the fuel centerline temperature acceptance criteria is met.

Response NL-04-073-RSA-9:

The response this question contains proprietary information. The proprietary and non-proprietary versions of the response are provided in Attachments 3 and 4 of this letter, respectively.

Question NL-04-073-RSA-10:

Regarding the RCCA drop/misoperation transient re-analysis:

a. The licensee states automatic rod withdrawal has been physically disabled at IP2. Provide the technical justification for this statement and how it affects the transient analysis.

b. The licensee states generic transient statepoints designed to bound specific plant types were examined and found to be applicable to IP2 at SPU conditions. Please reference the document from which these generic statepoints were derived from and explain how these are applicable to IP2.

c. Provide the quantitative results demonstrating the minimum DNBR remained above the SAL DNBR and the peak fuel centerline melt temperature criteria is met for the RCCA dropped event at SPU conditions in section 6.3.4.5.

d. The licensee addressed the misaligned RCCA transient and stated the DNBR did not fall below the SAL value when analyzed at the SPU conditions. Provide the quantitative

analysis that shows DNBR did not fall below the SAL when analyzed at the SPU conditions for one RCCA fully withdrawn and one RCCA fully inserted.

e. Provide the analytical justification that shows the resulting linear heat generation rate was below that which would cause fuel melting in the RCCA misalignment transient analysis.

Response NL-04-073-RSA-10a:

This part of the question does not apply to IP3.

Response NL-04-073-RSA-10b:

The methodology for the dropped rod event, WCAP-11394 (Reference 7 of licensing report Section 6.3.16) is based on establishing bounding sets of generic dropped rod statepoints dependent on the plant type being analyzed. This method was developed for Westinghouse plants (i.e., 2-loop, 3-loop and 4-loop plants) having Westinghouse designed rod control and protection systems. The methodology addresses three analysis areas, 1) the statepoints, i.e., the reactor power, temperature and pressure at the most limiting time in the transient (transient analysis), 2) the DNB (thermal-hydraulic) analysis performed at the conditions established by the first step which determines limiting (FΔH) conditions which will exceed DNBR limits, and 3) the nuclear analysis which verified that the potential combinations of dropped rods, over the core life, will not result in exceeding the limiting (FΔH) conditions (established in step 2).

All three analyses are performed using a parametric approach so that cycle dependent conditions can be determined. While the nuclear analysis and thermal-hydraulic analyses are performed at plant specific (and cycle dependent) conditions, the transient analysis statepoints are performed on a generic basis (i.e., intended to bound cycle-specific variations).

As part of the WCAP-11394 Drop Rod Methodology (NRC approval dated October 23, 1989), a series of generic transient analysis statepoints were generated with conservative assumptions designed to bound 2-loop, 3-loop or 4-loop Westinghouse plants. The statepoints used for IP3 are based on a 4-loop plant having a 12 ft. (height) core while assuming rod withdrawal block, as well as a failure in the rods-on-bottom signal that blocks automatic rod withdrawal, to bound all conditions possible for IP3. The generic statepoints are generated for a range of dropped rod worths and moderator temperature coefficients that bound the range of parameters applicable to IP3.

Response NL-04-073-RSA-10c:

The response this question contains proprietary information. The proprietary and non-proprietary versions of the response are provided in Attachments 3 and 4 of this letter, respectively.

Response NL-04-073-RSA-10d:

The response this question contains proprietary information. The proprietary and non-proprietary versions of the response are provided in Attachments 3 and 4 of this letter, respectively.

Response NL-04-073-RSA-10e:

The response this question contains proprietary information. The proprietary and non-proprietary versions of the response are provided in Attachments 3 and 4 of this letter, respectively.

Question NL-04-073-RSA-11:

Regarding the chemical volume control system malfunction re-analysis, define what the interim operating procedures are, and how they address dilution during hot and cold shutdown.

Response NL-04-073-RSA-11:

The response this question contains proprietary information. The proprietary and non-proprietary versions of the response are provided in Attachments 3 and 4 of this letter, respectively.

Question NL-04-073-RSA-12:

Regarding the loss of normal feedwater (LONF) transient analysis:

a. In the analysis of record, the turbine driven auxiliary feedwater (TDAFW) pump is not credited to mitigate this transient. What is the consequence on the plant if the TDAFW pump is not aligned and there is less auxiliary feedwater (AFW) being fed to the system under the SPU? Provide the technical justification to show there is sufficient heat sink provided for the SPU condition. Also provide the justification to show 10 minutes is adequate time for the operator to align the TDAFW pump. Demonstrate the operators are capable of performing this action in 10 minutes and how plant procedures have been updated to address the operator action.
b. The licensee states with respect to DNB, the LONF transient is bounded by the loss of load transient. Provide the technical basis for this statement and provide the quantitative result demonstrating the DNBR limit remains above the SAL and is bounded by the loss of load transient in the RCCA drop/misoperation transient analysis.

Response NL-04-073-RSA-12a:

IP3 has 2 MDAFW pumps and 1 TDAFW pump. All three of these automatically start on a trip signal such as low SG level. However, the TDAFW pump needs to be manually aligned by opening its discharge valves to deliver flow to the SGs. The analysis of record for the LONF/LOAC transients assumes the failure of one MD AFW pump. Consequently, only one MDAFW pump would be available initially and would supply two steam generators. For the SPU analysis, credit is now taken for operator action to initiate additional AFW flow to the SGs from either the TD AFW pump or from the other MDAFW pump at 10 minutes. This additional flow is only equivalent to that which the other motor-driven AFW pump can supply (the TD AFW pump has twice the capacity of the MDAFW pump). This assumption bounds the possibility of a failure in one of the motor-driven AFW pumps or in the turbine-driven AFW pump.

Using Licensing assumptions, the additional AFW flow at 10 minutes is needed to prevent the pressurizer from going water solid. Preventing the pressurizer from going solid is a conservative criterion to assure that a Condition II event, an incident of moderate frequency,

does not result in a more serious plant condition without other faults occurring independently. Even if the TD AFW pump is not aligned, the pressurizer water solid condition occurs late in the event and would result in the PORVs discharging water for some period of time, with the transient being terminated when the decay heat drops to the level where available AFW flow is sufficient to remove it. EPRI testing has shown that the PORVs are capable of reseating following liquid discharge. Thus the water solid pressurizer will not result in a more serious plant condition for this event.

As noted, the above discussion is pertinent to the "licensing" transient scenario. A near "best-estimate" LONF analysis that assumes nominal conditions was performed and shows that in the event of a complete LONF transient (and LOAC), the AFW system is sufficiently sized, assuming only one motor-driven AFW pump, to remove decay heat and pump heat and preclude a pressurizer water-solid condition. Nevertheless, Emergency Operating Procedure (EOP) E-O, "Reactor Trip or Safety Injection" is being changed to reflect the "licensing" transient scenario.

EOP E-O provides actions to verify proper response of the automatic protection systems following manual or automatic actuation of a reactor trip or safety injection, to assess plant conditions, and to identify the appropriate recovery procedure. The AFW verification is performed very early in this Procedure (at Step 4). Verification of the operator response time was performed on the plant simulator and operator response time to complete step 4 was 3 minutes and 30 seconds.

Response NL-04-073-RSA-12b:

The response this question contains proprietary information. The proprietary and non-proprietary versions of the response are provided in Attachments 3 and 4 of this letter, respectively.

Question NL-04-073-RSA-13:

Regarding the loss of AC power (LOAC) to the station auxiliaries transient analysis:

a. The licensee states the TDAFW pump needs to be manually aligned before AFW can be delivered to the steam generators. How is this addressed in the plant procedures and what is the technical basis for the 10-minute completion time?

b. Provide the DNBR value which demonstrates the minimum DNBR remained above the SAL and the technical justification demonstrating the minimum DNBR for LOAC is bounded by the complete loss of flow transient.

Response NL-04-073-RSA-13a:

IP3 Emergency Operating Procedure E-O provides actions to verify proper response of the automatic protection systems following manual or automatic actuation of a reactor trip or safety injection, to assess plant conditions, and to identify the appropriate recovery procedure. The AFW verification is performed very early in this Procedure (at Step 4). Verification of the operator response time was performed on the plant simulator and operator response time to complete step 4 was 3 minutes and 30 seconds.

Response NL-04-073-RSA-13b:

The response this question contains proprietary information. The proprietary and non-proprietary versions of the response are provided in Attachments 3 and 4 of this letter, respectively.

Question NL-04-073-RSA-14:

Regarding the excessive heat removal due to feedwater system malfunction re-analysis, the licensee states the case initiated at hot zero power (HZP) conditions with manual rod control was less limiting than the HZP steamline break analysis. Provide the technical basis for this statement.

Response NL-04-073-RSA-14:

The response this question contains proprietary information. The proprietary and non-proprietary versions of the response are provided in Attachments 3 and 4 of this letter, respectively.

Question NL-04-073-RSA-15:

Regarding the excessive load increase incident, the analysis of record states the LOFTRAN computer code was used to analyze this transient. The application report does not describe how this incident was analyzed. State the methodology used to analyze this transient and provide the results obtained, including pressurizer pressure, nuclear power, DNB ratio and core average temperature over time which show the acceptance criteria is met.

Response NL-04-073-RSA-15:

The response this question contains proprietary information. The proprietary and non-proprietary versions of the response are provided in Attachments 3 and 4 of this letter, respectively.

Question NL-04-073-RSA-16:

Westinghouse Report, NS-TMA-2182, "Anticipated Transients Without Scram [ATWS] for Westinghouse Plants, December 1979," was used in performing ATWS analysis. Provide the technical justification that demonstrates there is a linear correlation in going from 10 percent to 60 percent in reduced AFW flow which yields a 76 psi increase in peak RCS pressure. In addition, provide the technical justification that demonstrates the moderator temperature coefficient is valid for 95 percent core life under uprate conditions and that the power uprate remains limited by the ATWS analysis of NS-TMA-2182.

Response NL-04-073-RSA-16:

Part 1 – AFW flow sensitivity and power uprate

This part of this question does not apply to IP3. The two most limiting ATWS events were explicitly analyzed for IP3 at SPU conditions, as discussed in Section 6.8 of WCAP-16212-P and WCAP-16212-NP.

Part 2 - MTC applicability

The IP3 Technical Specifications (Section 3.1.3) indicate the MTC upper limit shall be < 0 Δk/k/°F (0 pcm/°F) at hot zero power. This "negative" MTC requirement (limit) is currently applicable to IP3 and is being retained for the uprate. At startup, Low Power Physics testing is performed to verify the accuracy of the core design, which includes a zero power MTC measurement that ensures the MTC upper limit Technical Specification, is satisfied. If the measured MTC is not within the upper limit, administrative withdrawal limits for control banks to maintain a MTC within the limit must be established. This measurement criterion ensures that a negative MTC condition is met.

The ATWS methodology is based on assuming the MTC will be more negative than -7 pcm/°F for 99% and more negative than -8 pcm/°F for 95% of the time that the core power is greater than 80%. This methodology is based on conservative assumptions that a plant measuring a negative (non-positive) MTC at zero power (no xenon conditions) will result in a reduced MTC at hot full power, equilibrium xenon conditions of at least -8 pcm/°F. This is based on the assumption that with higher fuel average temperatures at full power and a reduced boron concentration due to xenon, the MTC is conservatively assumed to be lower by (at least) 8 pcm/°F when going from zero power (no xenon) to full power equilibrium xenon conditions. This assumption bounds the calculated MTC result for IP3 which is on the order of an 8.5 pcm/°F MTC reduction when going from zero power (no xenon) to full power equilibrium xenon conditions.

As part of the SPU analyses, specific calculations were done examining the MTC conditions for future uprate cycles. These calculations show that the fuel performance characteristics for future cycles will result in a zero power (no xenon) MTC of no more than 0 pcm/°F throughout core life. These checks have been performed for the uprate and are addressed each cycle as part of the Westinghouse Reload Safety Evaluation Methodology that is employed for IP3 (Reference 2 of Section 6.3.16). Based on the SPU calculations and a MTC reduction to full power equilibrium xenon conditions, the MTC at uprate conditions will be ≤ 8 pcm/°F for the entire core life of future cycles. To ensure that the MTC upper limit Technical Specification will continue to be met for each future operating cycle, the MTC upper limit is included with the limiting conditions examined for every cycle as part of the Westinghouse Reload Safety Evaluation Methodology.

Therefore the basis for the ATWS rule, as applied to IP3, is preserved through Tech Spec requirements, physics testing and design basis change controls (i.e., Reload Safety Evaluation Methodology, 50.59 process) which ensures that the ATWS analysis methodology of NS-TMA-2182 is applicable for SPU uprate conditions and will be checked and confirmed for future cycles. In the event an increase to the zero power MTC Technical Specification Limit is considered such that the ATWS MTC assumptions are no longer met, the ATWS analysis and methodology will be revised and approval through the NRC will be required.

Question NL-04-073-RSA-17:

Describe the measures taken to ensure that: (a) the operators will be able to terminate the break flow from the faulted steam generator within the 60 minutes LOFTTR2 analyzed time, (b) no overfilling occurs, and (c) the radioactivity release will remain within regulatory limits. Provide the results of the steam generator tube rupture thermal-hydraulic analysis over time to demonstrate that the steam generator will not overfill during this event for the 60-minute analyzed condition.

Response NL-04-073-RSA-17a:

Operators are currently required to terminate break flow within 60 minutes. This is required to be demonstrated on the plant simulator as part of operator training. Thus, achieving termination in 60 minutes is assured.

Response NL-04-073-RSA-17b:

The UFSAR Section 14.2.4.4 discusses an evaluation of increased operator action time and margin to overfill. This evaluation was repeated for the stretch power uprate with the LOFTTR2 code to evaluate the impact on the radiological consequences of the SGTR break flow continuing longer than the 30 minutes considered in the licensing basis and to evaluate the potential for steam generator overfill. Consistent with the evaluation currently included in the UFSAR nominal operating conditions are assumed and uncertainties or a single failure are not included.

The sequence of events for the LOFTTR2 margin-to-overfill evaluation is presented in Table NL-04-073-RSA-17-1. Figures showing the pressurizer pressure, intact and ruptured steam generators' pressures, break flow, and ruptured steam generator water volume transients are provided in the following Figures NL-04-073-RSA-17-1 through NL-04-073-RSA-17-4, respectively. As shown in Figure NL-04-073-RSA-17-4, SG overfilling will not occur if the break flow is terminated by 60 minutes

Response NL-04-073-RSA-17c:

Tables NL-04-073-RSA-17-2 and NL-04-073-RSA-17-3 provide a comparison of the offsite and control room doses calculated using the licensing basis analysis and calculated using the LOFTTR2 thermal hydraulic analysis. As shown in these Tables, the LOFTTR2 dose consequences are bounded by the 'licensing' analysis, and are well within regulatory limits.

TABLE NL-04-073-RSA-17-1

SEQUENCE OF EVENTS

Margin to Steam Generator Overfill Analysis

Event	Time, seconds
SGTR	0
Reactor Trip (Overtemperature-ΔT)	143
AFW Initiated	173
SI Actuated (Low Pressurizer Pressure)	405
Ruptured Steam Generator AFW Flow Isolated	720
Ruptured Steam Generator Steamline Isolated	960
RCS Cooldown Initiated	1,500
RCS Cooldown Terminated	2,170
RCS Depressurization Initiated	2,410
RCS Depressurization Terminated	2,498
ECCS Flow Terminated	2,738
Break Flow Terminated	3,650

TABLE NL-04-073-RSA-17-2

PRE-ACCIDENT IODINE SPIKE RADIOLOGICAL CONSEQUENCE RESULTS COMPARISON

Total Effective Dose Equivalent (TEDE) Results	**Licensing Basis 30-Minute Hand Calculation**	**LOFTTR2 60-Minute Calculation**
Exclusion Area Boundary TEDE (rem)	4.9	1.7
Low Population Zone TEDE (rem)	1.9	0.7
Control Room TEDE (rem)	2.2	0.9

TABLE NL-04-073-RSA-17-3

ACCIDENT INITITATED IODINE SPIKE RADIOLOGICAL CONSEQUENCE RESULTS COMPARISON

Total Effective Dose Equivalent (TEDE) Results	**Licensing Basis 30-Minute Hand Calculation**	**LOFTTR2 60-Minute Calculation**
Exclusion Area Boundary TEDE (rem)	1.9	0.7
Low Population Zone TEDE (rem)	0.8	0.4
Control Room TEDE (rem)	0.9	0.4

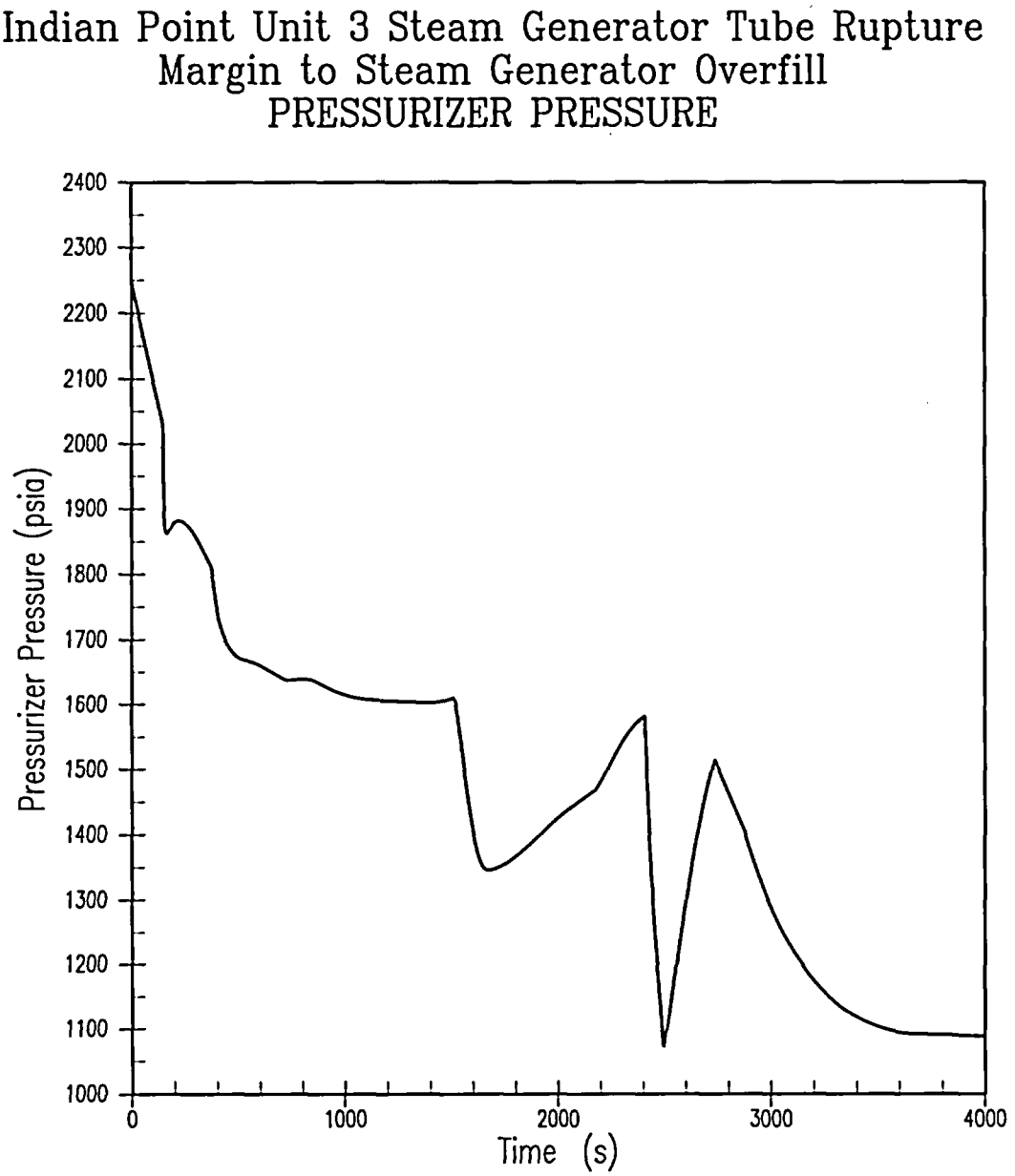

FIGURE NL-04-073-RSA-17-1: Primary Pressure

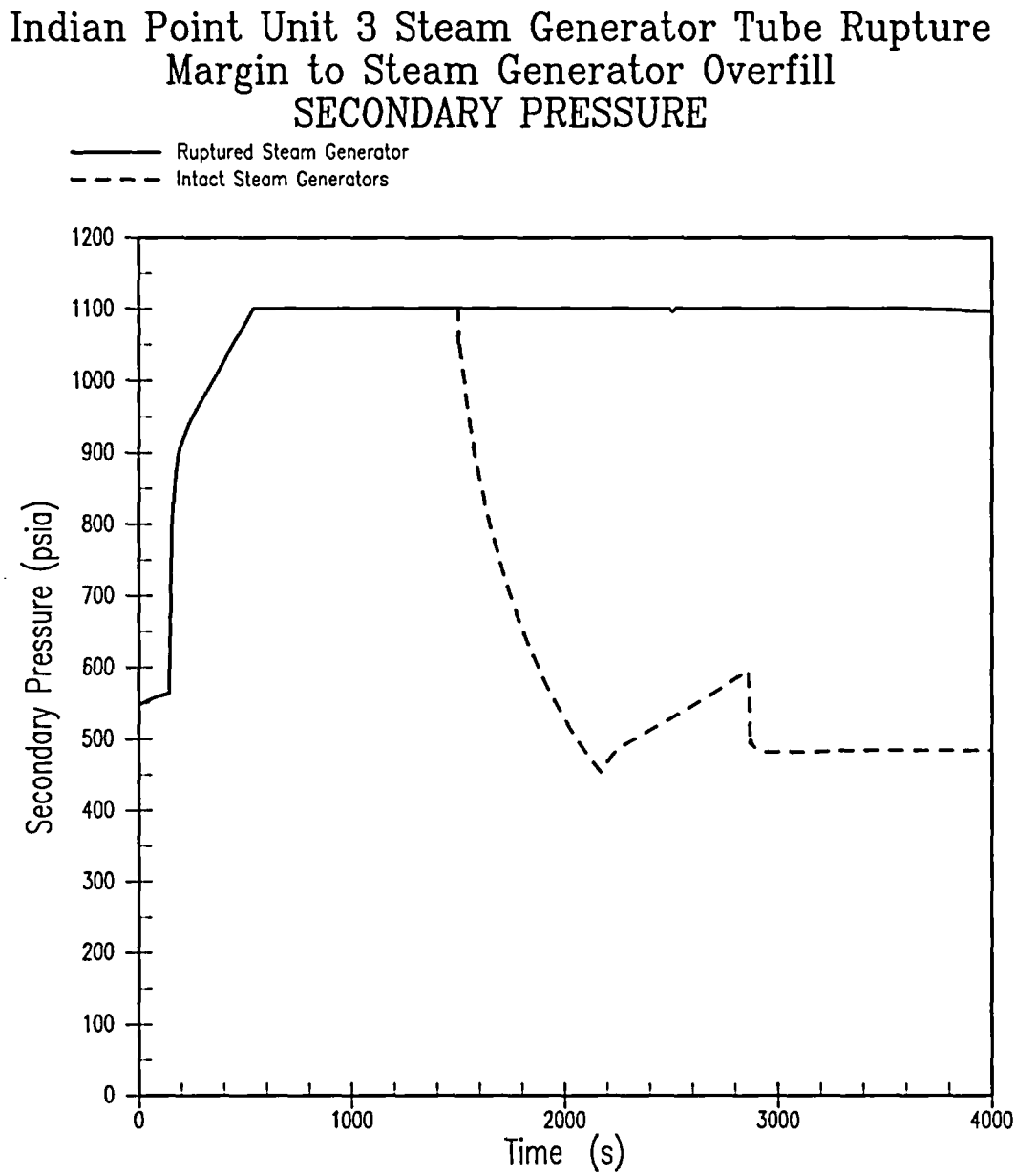

FIGURE NL-04-073-RSA-17-2: Secondary Pressures

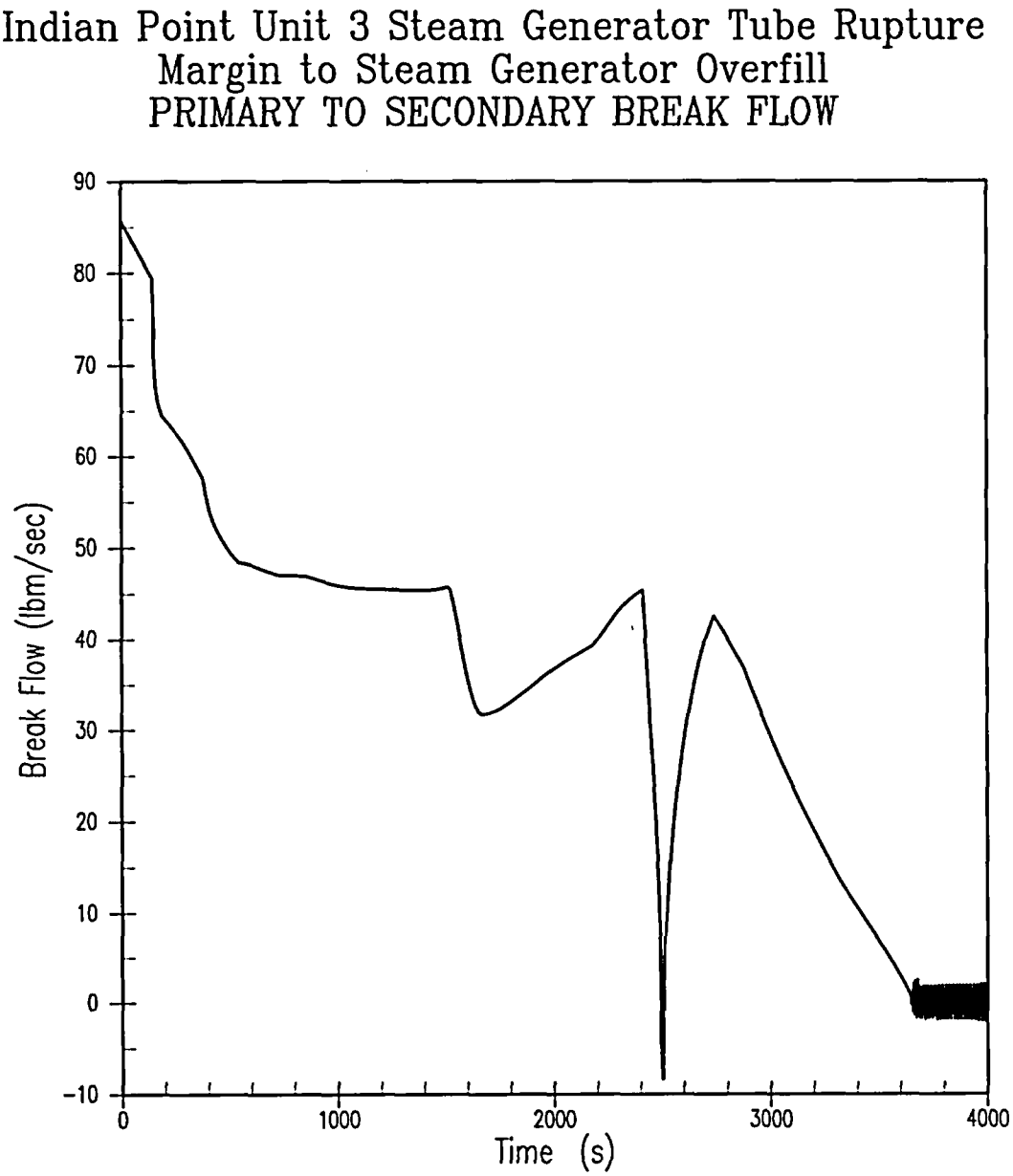

FIGURE NL-04-073-RSA-17-3: Primary-to-Secondary Break Flow

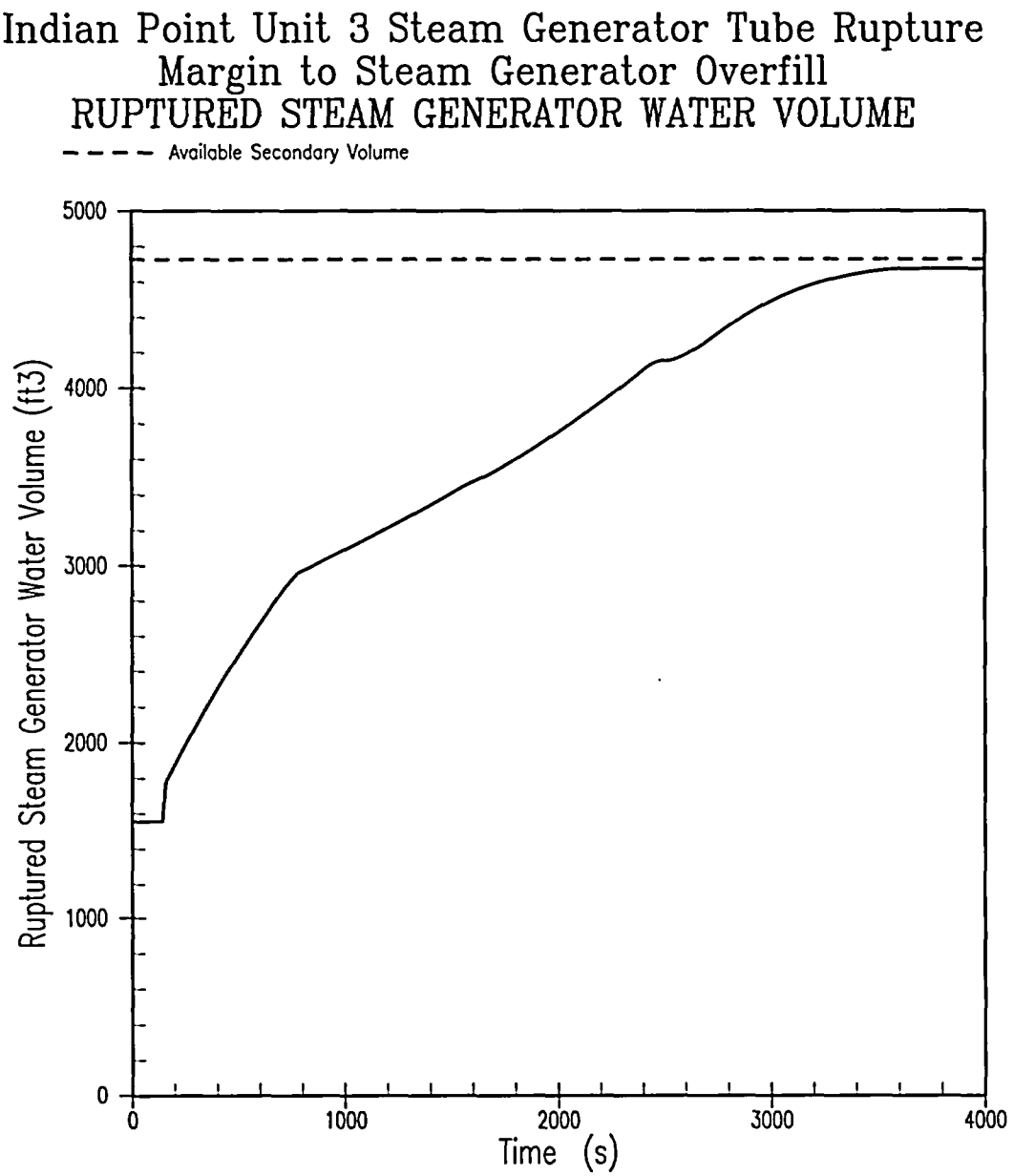

FIGURE NL-04-073-RSA-17-4: Ruptured Steam Generator Water Volume

Question NL-04-073-RSA-18:

The licensee states the volume of water in the condensate storage tank (CST) required for 8 hours of decay heat removal and primary system cooldown was determined to be acceptable in a station blackout (SBO) for the SPU. Provide the volume of the CST and the margin available between the actual volume and minimum TS limit which shows IP2 remains above the minimum TS requirement during an SBO for the SPU.

Response NL-04-073-RSA-18:

The condensate inventory for decay heat removal was determined using the methodology in NUMARC 87-00, Section 7.2.1 (Reference 1), which provides a bounding analysis for assessing condensate inventory. For the stretch power uprate (3230 MWt NSSS power), the volume of water required for 8 hours of decay heat removal and primary system cooldown to 320°F was determined to be nominally 148,000 gallons. Technical Specification 3.7.6 requires that a minimum of 360,000 gallons of water must be available in the Condensate Storage Tank (CST) during plant operation above 350°F. Accordingly, there is a large margin between the minimum required volume of water in the CST and the volume of water required for coping with an SBO event.

The design basis for IP3 is hot shutdown. The licensing basis for the CST volume is the CST inventory required to bring the plant from full-power to hot-standby conditions in the event of a loss-of-offsite-power, and maintain the plant at hot standby for 24 hours. Since the duration of the SBO event is less than 24 hours, it is bounded by maintaining hot standby for 24 hours. This is assured by the TS requirement of a minimum CST inventory of 360,000 gallons. The analysis of Section 4.2.4.1 demonstrates that the SPU requires a minimum useable inventory of 288,500 gallons (based on 0.6% power uncertainty) or of 292,200 gallons (based on 2.0% power uncertainty) to satisfy the licensing basis requirement. Thus, considering the unavailable volume and other margins for the CST, the licensing basis requirement remains satisfied by the existing TS CST volume of 360,000 gallons.

The auxiliary feedwater pumps can draw from an alternative supply of water to provide for long-term cooling. This alternative supply is from the 1.5 million gallon city water storage tank. This supply is manually aligned to the auxiliary feedwater pumps in the event of unavailability of the condensate storage tank and the city water system.

Reference:

1. NUMARC 87-00, "Guidelines and Technical Bases for NUMARC Initiatives Addressing Station Blackout at Light Water Reactors," Rev. 1.

Question NL-04-073-RSA-19:

Entergy proposed to change the AVs of several reactor protection system (RPS) trip functions and engineered safety feature actuation system (ESFAS) actuation functions specified in Tables 3.3.1-1 and 3.3.2-1, respectively. For each of those RPS and ESFAS functions that is proposed to have its AV changed, please provide the calculation of the channel statistical allowance for instrumentation uncertainties, and the current and revised (if revised) safety analysis limits (SAL) and nominal setpoint values.

Response NL-04-073-RSA-19:

Please refer to the response to I&C Question 4, which provides the Entergy setpoint methodology uncertainty calculation tables for all protection system trip functions affected by the uprate, the calculation of the allowable values based on Entergy specification IES-3B "Instrument Loop Accuracy and Setpoint Calculations" Revision 0, and a summary table which identifies the current and revised SALs, nominal trip setpoints, and allowable values.

Question NL-04-073-RSA-20:

Many cycle-specific parameters have been relocated to the core operating limits report (COLR), which was not submitted with the SPU application. These include the values of the constants in the over-temperature and over-power ΔT functions, respectively (Notes 1 and 2 in Table 3.3.1-1), and the DNBR limiting values of the pressurizer pressure, RCS average temperature, and RCS total flow rate (LCO 3.4.1). Provide either the COLR or the values of these parameters.

Response NL-04-073-RSA-20:

The IP3 Licensing Report (Attachment III of NL-04-069) provides the values for DNB-related constants and limiting values in Section 6.3.1 on pages 6.3-3 through 6.3-6. Additional information regarding the limiting Safety Analysis Limits (SALs) and Nominal Trip Setpoints (NTSs) is provided in Table 6.10-1 of WCAP-16212-P and WCAP-16212-NP for those items that changed as a result of the SPU. Items not listed in Table 6.10-1 were not changed by the SPU. Table 6.10-1 is reproduced below as Table NL-04-073-RSA-20-6.10-1. Additional comparative information is also provided in the response to I&C item NL-04-073-IC-4 Table NL-04-073-IC-4-1 which provides comparison of before and after values for the RPS and ESFAS parameters that changed as a result of the SPU.

The cycle-specific values for the COLR are not yet available (the reload design process will complete the revised COLR in February 2005), but will be bounded by the SAL and NTS values provided in Table 6.10-1 of WCAP-16212-P and WCAP-16212-NP. The preliminary COLR values for pressurizer pressure, RCS average temperature, and RCS total flow rate are pressurizer pressure of ≥ 2204 psia, RCS average T_{avg} temperature of ≤ 576.7°F for a full power T_{avg} of 572°F, and RCS total flow rate of ≥ 364,700 gpm.

Table NL-04-073-RSA-20-6.10-1
IP3 SPU Summary of RTS/ESFAS Setpoint Calculations

Protection Function	NTS	SAL Value	Tech. Spec. AV
Nuclear Instrumentation System (NIS) Power Range Reactor Trip High Setpoint	≤108% rated thermal power (RTP)	118% RTP	≤111% RTP
Overtemperature ΔT Reactor Trip			
K_1 Max		1.42	
K_1 Nominal	≤1.22		≤1.26
K_2	0.022 /°F	0.022 /°F	
K_3	0.00070 /psi	0.00070 /psi	
Overpower ΔT Reactor Trip			
K_4 Max		1.164	
K_4 Nominal	≤1.074		≤1.10
K_5 (decreasing T_{avg})	0	0	
K_5 (increasing T_{avg})	0.0175/°F	0.0175/°F	
K_6 (T≥T")	0.0015/°F	0.0015/°F	
K_6 (T<T")	0	0	
Pressurizer Pressure Low (Reactor Trip)	1930 psig	1850 psia	1900 psig
Pressurizer Pressure Low (SI Initiation)	1780 psig	1648.7 psia	1710 psig
Steam Flow in Two Steamlines – High (SI/SL actuation)	≤43% full flow between 0 and 20% load, increasing linearly to ≤110% full flow at 100% load	78% full flow between 0 and 20% load, increasing linearly to 144% full flow at 100% load (1)	≤54% full flow between 0 and 20% load, increasing linearly to ≤120% full flow at 100% load
T_{avg} – Low Coincidence with High Steam Flow (SI/SL actuation)	≥542°F	535°F (1)	≥540.5°F

Note:

1. Although the SAL is beyond the instrument range, the uncertainty calculation confirmed that all uncertainties subject to saturation can be accommodated between the NTS and the instrument span limit.

Question NL-04-073-ENV-1:

Section 5.7 of the application report states that the "original environmental evaluations were conducted at 3216.5 MWt (AEC SER dated 10/19/1970)." Confirm the correctness of this statement.

Response NL-04-073-ENV-1:

This RAI does not apply to IP3.

Question NL-04-073-ENV-2:

Section 5.7 states that no environmental impact statement or environmental evaluation was required for the 1990 power uprate. On December 6, 1989, the NRC staff published an environmental assessment (see 54 FR 50459) for the March 3, 1990, power uprate. Provide a change to the statement in Section 5.7.

Response NL-04-073-ENV-2:

This RAI does not apply to IP3.

Question NL-04-073-ENV-3:

Section 5.7 states that the current power uprate qualifies for a categorical exclusion under 10 CFR 51.22(c)(9). Provide the environmental evaluation performed for the proposed power uprate in accordance with Appendix B of the facility operating license. The response should include a discussion of the radiological and non-radiological impacts of the proposed uprate.

Response NL-04-073-ENV-3:

Response to be provided later.

Question NL-04-073-FAC-1:

Section 10.3 addresses the flow-accelerated corrosion (FAC) program for IP2. The program consists of inspecting selected components and using the inspection results to qualify all the FAC-susceptible components for further service. In order to evaluate the FAC program, the staff requests that the applicant provide the following additional information:

a. Describe the program used in evaluating FAC for IP2. Specify the predictive code used and its application in the FAC program.

b. Describe the criteria used in the FAC program for selecting components for inspection.

c. Describe the criteria for repair or replacement of components that become damaged as a result of FAC.

d. For the five components most susceptible to FAC, provide the changes in velocity and temperature that result from the SPU.

e. For the five components most susceptible to FAC, provide the changes in predicted wear rate that result from the SPU.

Response NL-04-073-FAC-1a:

The program used in evaluating FAC for IP3 is described in Entergy procedure ENN-DC-315, "Flow Accelerated Corrosion Program." This procedure was established to consolidate information and plans concerning wet steam corrosion issues in a single document. It implements the inspection program cited in the Indian Point Unit 3 UFSAR, Section 10.4, "Tests and Inspections." The predictive code used in the FAC program is EPRI Checworks Flow Accelerated Corrosion Application Version 1.0G.

The approach of this program is based on a comprehensive and continual engineering review of the plant design, available technical information, and experience at Indian Point 3 and other plants. The program was developed consistent with the guidelines provided by INPO, NRC, and EPRI and includes the following:

Identification of susceptible systems – A detailed engineering review was performed to identify all FAC susceptible piping systems. Screening criteria used to exclude non-susceptible piping segments from further FAC analysis include: low temperature, piping material other than carbon steel, systems other than water or wet steam, raw water systems, and systems with no flow or which operate less than 2% of operating time.

Checworks Modeling – EPRI's Checworks computer model is used for pipe wear predictions when the piping can be modeled. Input to the model includes heat balance information, steam cycle data, water chemistry, operating time, and piping and component data to analytically identify trouble areas for inspection. When the Checworks model accurately reflects the plant, inspection results are added into the model. A wear rate analysis is performed to generate predicted FAC rates and calculated life expectancies of uninspected components. Inspection results are compared to predicted results to ensure accurate model calibration. Results that do not fall within specified limits as per the Checworks user guide are investigated as to the reason and to determine if an updated FAC analysis should be performed and/or additional inspection locations specified.

Large Bore Non-Checworks (LBNCW) Systems – These systems are large bore (>2") FAC susceptible systems that are not suitable for Checworks modeling (i.e., vent lines, gland steam, auxiliary steam, recirculation lines, high level dump lines, bypass lines, etc.) In general, these systems have usage and flow rates that cannot be accurately quantified because demand and operating conditions greatly vary or are controlled by a remote level, pressure, or temperature signal. LBNCW FAC susceptible systems are determined through the screening process described above. The intent of this methodology is to ensure adequate inspection coverage of LBNCW FAC susceptible systems and assure the structural adequacy of uninspected components.

Typically the most susceptible components include, but are not limited to:

- Downstream of Control Valves
- Vent Lines
- High Level Dump Lines
- Bypass lines
- Discharge Nozzles
- Orifices
- Areas with Concentrated Geometry Changes (i.e. fitting bound elbows, etc.)
- Drain Tanks, Shells of MSRs, Feedwater Heaters, etc.
- Normally closed valves with a potential for leakage.

Small-Bore Systems – These systems are small bore (<2") FAC susceptible systems that are determined by the screening process previously described. These systems include socket-welded piping that cannot be accurately modeled using Checworks due to the many uncertainties such as unknown operating conditions, percent of usage, and fit-up gaps between the piping and sockets. Systems determined to be high wear are considered for complete replacement with a FAC resistant material.

Component Reinspection, UT Trending – Components that have been inspected are re-examined at a frequency consistent with the calculated component remaining service life based on the inspection results. Components are also reinspected for other reasons, including suspect or questionable inspection results, predicted life less than the time to the next refueling outage, baseline inspection after component repair or replacement, and monitoring of component wear at a specified time interval. A computerized database is utilized to record historical component inspection data, help schedule components for reinspection and record other important component information.

Closed and Low Usage Boundary Valves – Industry experience has identified seat leakage problems with valves that are closed or see very low usage during normal operation. The leakage can cause FAC in lines that were previously screened out of the FAC program due to low usage.

Plant and Industry Experience – Plant specific experience is taken into consideration in the identification of susceptible systems and components. Plant experience considered includes: historical UT data, maintenance records, repair and replacement data, and interviews with plant personnel to solicit specific operational and maintenance information. Industry experience is obtained directly from industry sources, such as the Checworks Users Group (CHUG) or INPO. It is also obtained from discussions with peer engineers at other nuclear facilities. Documents that contain industry experience include USNRC Information Notices, EPRI Reports, and Nuclear Network Reports.

The inspection points derived from the above are used to ultimately produce a Largebore and Smallbore inspection list of inspection points for a particular inspection period.

Response NL-04-073-FAC-1b:

The FAC program draws on the following sources to determine the components selected for inspection.

Large Bore Components from Checworks Analysis - Checworks inspection locations are selected based on the following criteria:

Components predicted to have a service life less than the time to the next inspection interval. These include components identified for reinspection, as well as components with a negative "time to t_{crit}" ranking in the Checworks Pass 2 analysis.

At least one of the highest wear components inspected during the previous inspection interval.

Additional high wear components predicted by Checworks.

Large Bore Non-Checworks Systems - LBNCW inspection locations are selected based on the following criteria:

Potential for susceptibility is based on FAC engineering judgment, plant experience, and industry experience. In addition, a review of historical inspection and replacement data is performed to ensure the most susceptible components are inspected.

If the most susceptible component(s) has been previously inspected, the next highest ranked component is selected for inspection. Relative susceptibility as determined by the FAC engineer normally includes materials, operational experience, plant experience, industry experience, and FAC judgment considerations.

Additional locations are considered for inspection on sub-segments where it is determined that there are an insufficient number of inspections to adequately identify susceptibility or if there have been a number of replacements on the segment.

Discussions are held with the operations/systems/maintenance personnel regarding susceptible systems to determine current operational/functional parameters. This may identify specific locations that are highly susceptible which should be added as inspection points.

Determination is made whether the line or similar lines in a parallel train have had any historical component operational failures such as oscillating control valves or eroded orifices. This may greatly influence flow velocities and conditions and is considered in the selection of inspection locations.

Small Bore Systems – Small bore piping system inspection locations are based on the following criteria:

The inspection location selection process consists of a review of the susceptible systems including review of the isometric drawing(s) and flow diagrams for each small bore system to ensure adequate coverage of highly susceptible areas. Highly susceptible areas include, but are not limited to:

- Control Valves
- Discharge Nozzles
- Orifices
- Steam Traps
- Areas with Concentrated Geometry Changes
- Normally closed valves with leakage potential

As with the Large Bore Non-Checworks systems, inspections are based on FAC engineering judgment, plant experience, and industry experience, and a review of historical inspection and replacement data is performed to ensure the most susceptible components are inspected.

Based on the amount of piping, the operating conditions, the extent of coverage of susceptible areas and previous inspection results, a judgment is made as to the adequacy of inspection coverage.

On lines with adequate inspection coverage, a judgment is made as to the susceptibility of the line as either high or low. Repeat inspection of several components may be required before an accurate judgment of susceptibility can be made.

Systems that lack coverage of highly susceptible components have additional locations specified to determine the level of susceptibility. The inspection sample includes the areas detailed above and as many other locations as necessary to adequately judge the susceptibility of the system.

Systems determined to be high wear should be considered for complete replacement with a FAC resistant material as soon as reasonably possible. If replacement cannot be performed

before the unit is returned to service, inspection will be expanded to quantify the extent of wear in the system. Additional inspection should be performed in future outages until replacement can be completed.

Systems determined to be low wear require minimal future monitoring of the highest ranked components to ensure the level of susceptibility does not change. If significant wear is found during future inspections, the system should be reclassified as high wear.

Prior to each inspection interval, the susceptible systems are discussed with representatives from operations, maintenance and system engineering to determine current operational/functional parameters. The discussions may identify specific locations that are highly susceptible which should be added as inspection points. Consideration is also given to areas where industry experience has demonstrated a potential for susceptibility.

Component Reinspection Considerations - Components are scheduled for reinspection for several reasons:

- Suspect or questionable inspection results, which require confirmation.
- The predicted life is less than the time to the next RFO (i.e., prior to replacement).
- Baseline inspection after component repair or replacement.
- Monitoring of component wear at a specified time interval.

A component is scheduled for reinspection based on the time of component inspection, the calculated remaining service life and the refueling outage schedule for the plant. The time of reinspection (T_{reinsp}) is determined by the sum of the time of the component inspection and the calculated remaining service life. The component will be reinspected prior to the calculated T_{reinsp}.

Closed and Low Usage Boundary Valves - A review is performed to identify all valves that are closed during normal operation and which act as a FAC susceptibility boundary. The plant Thermal Efficiency Reports are reviewed prior to each refueling outage. These reports identify leaking valves and components. From this list, the components with the highest susceptibility are selected for inspection.

Prior to each refueling outage, a Condition Report System search encompassing the previous operating cycle is performed to identify seat leakage on all valves on the closed and low usage boundary list. Valves identified with seat leakage are considered for inspection during the next refueling outage.

Plant and Industry Experience - The nature and criteria for any particular review cannot be codified in advance. A form entitled "Plant and Industry Experience" is filled out to maintain a consistent process. Various actions may be required as a result of the evaluation process on any given topic. The following are examples:

Inspection Plan Modification – A specific location identified as a potential problem area may be added to the inspection scope for the next refueling outage to determine FAC susceptibility. The results of the inspection will determine the need for future inspection consideration.

Checworks Model Modification – The Checworks model for a system or portion of a system determined to be operated differently than currently modeled would be updated to determine the potential effects on FAC.

Susceptibility Screening Update – A system or portion of a system currently screened out of scope, that is identified as having an operational change which may affect FAC potential, will be considered for inclusion in the FAC program.

Response NL-04-073-FAC-1c:

Using the inspection results, the wear rate and predicted thickness at a future inspection date, usually the next refueling outage, is calculated. If the predicted thickness is greater than or equal to 87 ½ % of the component nominal thickness (T_{nom}), the component is acceptable for continued service. The 87 ½ % of T_{nom} represents the thinnest pipe wall allowed by the pipe manufacturer's tolerances ($\pm$ 12 ½ % T_{nom}). If the predicted thickness is less than or equal to 30% of T_{nom}, for safety related piping or 20% of T_{nom} for non-safety related piping, the component is to be repaired or replaced.

For instances when the predicted thickness is between the two extreme cases (87 ½% and 30% (or 20%) of T_{nom}), and less than the minimum required thickness per the code of construction, a structural evaluation is required. The structural evaluation is to satisfy the pipe code stress requirements for both hoop and axial directions. Based on the structural evaluation, if the component meets both the hoop and axial stress requirements for the predicted wall thickness at the end of the operating cycle, the component is acceptable for continued operation. For localized defects, a local wall thinning evaluation, using the methods described in the applicable ASME Code Cases may also be performed to determine the structural capabilities of the thinned component using the predicted wall thickness for the end of the operating cycle. Components that are found to be unacceptable for continued operation by either of the above two methods, are repaired or replaced prior to continued operation.

Response NL-04-073-FAC-1d and NL-04-073-FAC-1e:

IP3 uses the EPRI developed Checworks program to predict Flow Accelerated Corrosion in large bore piping systems. Due to the power uprate, the Checworks program will be updated to reflect the new operating conditions resulting from the uprate.

As part of this update, Wear Rate Analysis (WRA) will be run on every component so that the predicted wear rates include the post-uprate conditions. The results of this task can be used to assess the likely effect the design changes will have on FAC wear rates.

Based on the WRA output, a table of results will be compiled to compare the historical predicted wear rates to current predicted (post-uprate) wear rates. The table will include both actual results and percentage differences for representative components and lines so that detailed comparisons can be made.

This wear rate comparison is currently in progress, and will be completed by the end of 2004.

Question NL-04-073-PCP-1:

Discuss how the SPU affects the protective coatings program at IP2. If changes in the protective coatings program occur, describe them in detail and explain what steps are taken to address them. The discussion should include:

a. How the qualification of the Service Level 1 coatings are impacted by SPU temperature and pressure conditions.

b. Whether the qualification parameters (e.g., temperature, pressure, etc.) for Service Level 1 coatings will continue to be bounded by SPU design-basis accident (DBA) conditions.

c. Actions that will be taken if the qualification of Service Level 1 coatings are not bounded by the SPU/DBA conditions, since coating failure could threaten performance of the ECCS sump after a LOCA.

Response NL-04-073-PCP-1a:

The SPU temperature and pressure conditions are below or bounded by the DBA test parameters in ANSI N101.2. Since the Service Level I coatings used at IP3 have been tested to ANSI N101.2 there is no impact from the SPU temperature and pressure conditions.

Response NL-04-073-PCP-1b:

The Service Level 1 coatings at IP3 will continue to be bounded by the DBA parameters specified in ANSI N101.2.

Response NL-04-073-PCP-1c:

Considering that the Service Level 1 coatings have been tested to the DBA parameters specified in ANSI N101.2, which are more stringent than the SPU temperature and pressure conditions, no actions are required.

Question NL-04-073-SG-1:

Section 5.6 (Results) of the application report (page 5.6-7) states "The results of the evaluation show that all components analyzed meet ASME Code Section III limits for a 40-year design life." However, the results table (Table 5.6-2) indicate that the fatigue usage factor for the secondary manway bolts increases from 0.979 to 1.165 (the design limit is 1.0) as a result of the SPU, and a footnote on the table states that the bolts "... must be replaced after 34 years of operation, or sooner."

Provide a technical basis for the 34-year target for replacement of the secondary manway bolts. Describe how the bolt replacement target will be incorporated into your plant maintenance procedures.

Response NL-04-073-SG-1:

The IP3 replacement steam generators use studs, not bolts. As indicated in Table 5.6-2, the fatigue usage factor for SG manway studs is less than 1.0. This RAI does not apply to IP3.

Question NL-04-073-SG-2:

With regard to mechanical plugs, the application report states on page 5.6-10 (Conclusions) that, "... both the long and short mechanical plug designs satisfy all applicable stress and retention acceptance criteria at the SPU condition with up to 10-percent tube plugging.", and

that, "... mechanical plugs have been previously qualified for the SPU condition with up to 25-percent tube plugging." The licensee states on page 5.6-10 (Results) that, "The plug meets the Class 1 fatigue exemption requirements per N-415.1 of the ASME Code..."

a. Provide a table (similar to Table 5.6-2 for the primary and secondary side components) which summarizes the load conditions, stress categories, ASME allowables, and all applicable stress- and fatigue-related calculation results that support your conclusions for the mechanical plugs. Show the calculation results which indicate that ASME allowables were met.

b. Provide calculation results which show that the mechanical plugs are qualified for the SPU condition with up to 25% tube plugging.

c. Provide the basis and calculation results (if any) for satisfying the ASME Class 1 fatigue exemption requirements

Response NL-04-073-SG-2a:

The response this question contains proprietary information. The proprietary and non-proprietary versions of the response are provided in Attachments 3 and 4 of this letter, respectively.

Response NL-04-073-SG-2b:

This RAI does not apply to IP3. The work performed for the IP3 SPU project (See page 5.6-10 of WCAP-16212-p and WCAP-16212-NP and responses to NL-04-073-SG-2a and NL-04-073-SG-2c in Attachments 3 and 4) demonstrates qualification for 10% tube plugging, but does not cover tube plugging greater than 10%.

Response NL-04-073-SG-2c:

The response this question contains proprietary information. The proprietary and non-proprietary versions of the response are provided in Attachments 3 and 4 of this letter, respectively.

Question NL-04-073-SG-3:

With regard to shop weld plugs, the licensee states on page 5.6-11 (Conclusions) that, "All primary stresses are satisfied for the weld between the weld plug and the tubesheet cladding.", and, "The overall maximum primary-plus-secondary stresses for the enveloping transient case of 'steady-state fluctuation' were determined to be acceptable.", and, "It was determined that the fatigue exemption rules were met, and, therefore, fatigue conditions are acceptable."

a. Provide a table (similar to Table 5.6-2 for the primary and secondary side components) which summarizes the load conditions, stress categories, ASME Code allowables, and all applicable stress- and fatigue-related calculation results that support your conclusions for the shop weld plugs. Show the calculation results which indicate that ASME allowables were met.

b. Provide the basis and calculation results (if any) for satisfying the ASME fatigue exemption requirements.

Response NL-04-073-SG-3a:

The response this question contains proprietary information. The proprietary and non-proprietary versions of the response are provided in Attachments 3 and 4 of this letter, respectively.

Response NL-04-073-SG-3b:

The response this question contains proprietary information. The proprietary and non-proprietary versions of the response are provided in Attachments 3 and 4 of this letter, respectively.

Question NL-04-073-SG-4:

With regard to the tube undercut qualification, the licensee states on page 5.6-12 (Conclusions) that, "The results of the stress evaluation of the IP2 model 44F steam generators determined that the stresses are within ASME Code allowable values. Also, fatigue usage factors were determined to remain less than 1.0."

Provide a table (similar to Table 5.6-2 for the primary and secondary side components) which summarizes the load conditions, stress categories, ASME allowables, and all applicable stress- and fatigue-related calculation results that support your conclusions for the tube undercut qualification. Show the calculation results which indicate that ASME allowables were met.

Response NL-04-073-SG-4:

The response this question contains proprietary information. The proprietary and non-proprietary versions of the response are provided in Attachments 3 and 4 of this letter, respectively.

Question NL-04-073-SG-5:

In Section 5.6.5 (RG 1.121 Analysis), the licensee summarized the results of an analysis that was performed to define the structural limits for various regions of the steam generator tube. The licensee also refers to RG 1.121 as providing guidance on calculating the allowable tube repair limit (i.e., utilizing the structural limit, a growth allowance, and eddy current measurement uncertainty allowance). However, the licensee did not conclude whether the revised structural limits support the tube repair limit currently in the TSs.

Confirm that the existing tube repair limit remains appropriate for operation under SPU conditions, and discuss your technical basis for reaching this conclusion. If the tube repair limit currently documented in the TSs needs to be modified, submit an appropriate TS change.

Response NL-04-073-SG-5:

The existing tube repair limit of 40% remains appropriate under the proposed SPU conditions. The SG operational assessment for IP3 is documented in IP3-RPT-SG-03842. That report uses an uncertainty of 8.32%TW and a growth rate of 12% TW over a 40 year service life. As of the last SG inspection, no service related degradation had been found. The service time was 8.8 effective full power years.

The existing tube repair limit of 40% remains appropriate under the proposed SPU conditions. To date, there is no AVB wear identified in the IP3 replacement steam generators, therefore, the AVB contact points have no detectable wear as predicted in the post fabrication stress report. The detection limit for wear at AVB intersections is 5% TW or less so it can be assumed that the maximum growth rate for AVB wear for the tubes in service is 5% TW per cycle.

RG 1.121 provides guidance on calculating the allowable tube repair limit that takes into account operational degradation and measurement uncertainty. Under SPU conditions the tube structural limits for the Straight Leg, AVB, FDB and TSP provided in Table 5.6-3 of WCAP-16212-P are reduced slightly from the structural limits calculated in the original RSG RG 1.121 analysis. The Low T_{avg} limits are bounding. The eddy current uncertainty of 5% (Technique plus Analyst) is unaffected by the SPU. Calculations for the SPU have estimated the potential increase in wear due to changes in thermal/hydraulic conditions at the AVBs to be 87%. If that change is applied to the maximum AVB growth of less than 5% per cycle for the tubes remaining in service the resulting potential growth rates under SPU conditions is <10% TW per cycle. In accordance with improved technical specifications, the steam generators must be inspected after every refueling cycle. The maximum expected growth in AVB wear for one cycle is <10% under SPU conditions. When this growth and the 5% measurement uncertainty are subtracted from the tube structural limit at AVB supports, the resulting tube repair limit is above the improved technical specification limit of 40% TW.

For the remaining locations in the steam generator, no degradation has been found and the industry has found none to very limited degradation. In addition, the conditions for SPU will have a negligible effect on those areas. Therefore, the margin between the tube structural limits under SPU conditions and the current technical specification repair limit does not change and remains adequate. The tube repair limit of 40% currently documented in the Technical Specifications remains appropriate for operation under SPU conditions and does not need to be modified.

Question NL-04-073-SG-6:

In Section 5.5.6 (Tube Vibration and Wear), the licensee described the potential effects of the SPU on steam generator tube vibration and wear. Discuss the potential effects of the SPU on other modes of steam generator tube degradation (e.g., axial and/or circumferential cracking, pitting, etc.).

Response NL-04-073-SG-6:

Over a period of time, some tubes can become degraded locally under the influence of the operating loads and chemical environment in the steam generator. Degradation mechanisms observed in the first generation steam generators (for example, those using mill annealed [MA] Alloy 600 tubing) include OD stress corrosion cracking (ODSCC), primary water stress corrosion cracking (PWSCC), pitting, as well as tube wear at AVBs and TSPs due to tube vibration, and potentially at other locations such as the FDB, due to maintenance operations. The potential for these degradation mechanisms affecting the IP3 steam generators due to the SPU is discussed below.

The IP3 steam generators are Model 44F steam generators that use Alloy 690TT (thermally treated) tubes, and other design features (discussed below) that minimize the potential for tube degradation. Comparative studies (Reference NL-04-073-SG-6-1) of the performance of Alloy 690TT, Alloy 600TT and Alloy 600MA have shown Alloy 690TT has superior resistance to

corrosion compared to both Alloy 600TT and Alloy 600MA. Plants using Alloy 690TT, beginning in 1989 with Cook 2 and IP3, have operated without evidence of ODSCC and PWSCC for over 10 effective full-power years (EFPYs) at hot leg operating temperatures of up to 620°F. The IP3 hot leg operating temperature is expected to be limited to 603.0 °F (compared to the currently approved temperature of 600.8° F) following an NSSS power uprating to 3216 MWt.

Secondary side steam generator chemistry has contributed to tube cracking in a number of Alloy 600MA units and several Alloy 600TT units. Concentration of caustic solutions in areas of stress concentration aids the initiation of cracking. Stress corrosion cracking of Alloy 600 tubing is believed to follow an Arrhenius relationship, therefore, the reduction of maximum temperatures in the steam generator (T_{hot}) should decrease the propensity for development of stress corrosion cracking.

ODSCC was reported in 2 plants with Alloy 600TT tubing (Seabrook and Braidwood 2) after about 9.7 EFPYs of operation. The cause for the ODSCC in those plants has been attributed to an off-nominal tube material condition created during tube processing prior to bundle assembly; it is believed to be applicable to tubes manufactured at Blairsville. The presence of the condition is believed to be observable using bobbin-coil eddy current inspection. The Alloy 690TT tubing supplied for the IP3 SGs was manufactured by Sandvik, and all tubes were stress relieved after bending. Nonetheless, if any tubes in the IP3 steam generators contain a similar material condition, these tubes can be identified and effectively monitored by nondestructive examination (NDE).

Based on field experience and on laboratory studies designed to challenge tubing materials by exposure to severe environmental conditions, Alloy 690TT is regarded as not susceptible to primary water stress corrosion cracking (PWSCC) under transient or normal plant operating conditions.

Available laboratory information on the corrosion performance of Alloy 690TT shows improved resistance in nearly all categories relative to Alloy 600 (TT as well as MA - mill annealed). The primary basis for the selection of Alloy 690TT as the preferred tube material is its corrosion resistance. Available laboratory data demonstrate improved performance relative to Incoloy 800 and Alloy 600TT tubing with respect to almost all prevalent tube corrosion mechanisms in SG environments, especially PWSCC. The testing of Alloy 690TT has exhibited total immunity to PWSCC. Secondary side test environments, faulted in both acidic and alkaline ranges, have shown improved resistance to cracking in most environments; only in lead-contaminated caustic solutions does Alloy 690 lose its relative advantage with respect to outside diameter stress corrosion cracking (ODSCC), but none of the alternative materials were significantly better. With regard to environments that could produce pitting as the damage mechanism (typically aerated acid chloride solutions doped with cuprous oxide), none of the materials were immune, but Alloy 690TT was superior to the others in resisting pitting. Alloy 690TT was superior to all other candidate tubing materials except stainless steel with respect to wastage by acid sulfate solutions. In short, the overall performance of Alloy 690TT with respect to corrosion resistance in relevant SG environments indicates that the service experience should represent an improvement over previous material selections. Thus inspection programs should be designed to permit early detection of secondary side degradation mechanisms.

In addition to enhanced tube materials of construction, the IP3 steam generators use design features that have been shown effective to reduce the potential for stress corrosion cracking (SCC) initiation. These include; hydraulically expanded tubes in the tubesheet region,

quatrefoil-broached tube hole design with stainless steel TSP material, and supplemental thermal treatment of the row 1 through 8 U-bends following bending. Hydraulic expansion of the tubes in the tubesheet region results in reduced residual stresses compared to mechanical roll expansion and a more uniform expansion compared to explosively expanded tubes. The broached tube hole condition results in reduced potential for contaminant concentration at TSP intersections by decreasing the crevice area. Supplemental thermal treatment of the row 1 through 8 U-bends following bending is expected to reduce residual stresses to near straight leg region levels. In response to rapid PWSCC initiation in small-radius U-bends in plants with Alloy 600MA tubing, an in situ heat treatment process was developed in the 1980s. Application of this process in plants prior to operation has resulted in a greatly reduced potential for PWSCC initiation in Alloy 600 tubing; Alloy 690TT tubing is regarded as practically immune to PWSCC. The experience of plants with Alloy 600MA tubing stress relieved after bending is no evidence of PWSCC initiation in operation for up to 14 EFPY at hot leg temperatures up to 620°F.. The supplemental thermal treatment process, performed in the manufacturing phase for the IP3 steam generators, is expected to ensure the expected performance of the Alloy 690TT U-bends with respect to PWSCC.

The existing steam generator eddy current inspection program is in place to detect SCC and all other potential degradation mechanisms identified in IP3 Degradation Assessments. The condition monitoring assessment is used to confirm adequate tube integrity has been maintained since the prior inspection meeting the performance criteria. The operational assessment demonstrates reasonable assurance that the tube integrity performance criteria will be met throughout the period prior to the next scheduled tube inspection.

Reference:

NL-04-073-SG-6-1. EPRI TR-108501, "Predicted Tube Degradation for Westinghouse Models D5 and F-Type Steam Generators," 9/97.

Question NL-04-073-SG-7:

In Section 5.5.6 (Tube Vibration and Wear), the licensee states that thirteen tubes were identified with anti-vibration bar (AVB) wear during the steam generator inspections for refueling outage 15 (RFO-15), and that these thirteen tubes were administratively plugged. The licensee stated that, "The small number of tubes with AVB wear were judged to be outliers and not typical of the general tube behavior." In fact, the licensee's steam generator inservice inspection report for RFO-15 (ADAMS Accession No. ML023580031) stated that three of the plugged tubes experienced 20% through wall wear in three locations over two tubes.

Discuss the likely reasons for the anomalous wear in these two tubes, and discuss how increased vibrations due to SPU conditions might influence similar anomalously high AVB wear rates in tubes during future SPU operation

Response NL-04-073-SG-7:

As of the most recent SG ISI at IP3 – RFO12 (2003), performed after 8.9 EFPY operation of the replacement SGs, no evidence of AVB wear has been detected. Significant AVB wear in the IP3 RSGs is unlikely. The design and manufacturing of the U-bend region and AVB supports was modified from the first generation SG AVB design to eliminate the potential for wear to the degree practicable. AVB wear was determined to be due to fluid induced tube vibration causing the tubes to impact on the adjacent AVBs. The key parameter for the fluidelastic vibration of the

tubes was determined to be the length of the unsupported span of tubing, by implication, the effectiveness of the AVBs in supporting the tubes. Given the absence of detectable wear through RFO12, it is concluded that the design philosophy was effectively implemented in the IP3 RSGs.

The driving mechanism for AVB wear, fluidelastic excitation of the u-bends resulting from cross-flow over the tubes, has been considered in the design of all models of Westinghouse steam generators, as evidenced the installation of anti-vibration bars (AVB) in the U-bend region. Nevertheless, the observation of significant AVB wear in the Model 51 steam generators led to a detailed study in the early to mid-1980s of the conditions leading to the wear. This study concluded that the dimensions of the tubes and AVBs, together with the limitations of the assembly methods could lead to local conditions where the AVBs might not provide support at one, or more, tube to AVB intersections. The first generation SG AVB design included a clearance between the tubes predicated on the degree of ovalization of the tubes during bending and the AVB dimensional tolerances required for manufacture of the AVBs.

The initial data points for the effectiveness of the design improvements were derived from the SGs with replacement AVBs, which pioneered the improved AVB design philosophy. Field replacement of AVBs was implemented in numerous steam generators, which eliminated as much of the clearance between the tubes and the AVBs as practicable. This field repair was very successful in eliminating AVB wear; very few AVB indications were reported after field replacement of AVBs in the first generation SGs. Factory implementation of the revised design philosophy permitted even better controls on the remaining AVB/tube gaps than the field replacement. Thus, the second generation RSGs are expected to be virtually free from AVB wear over extended operating intervals.

The RSG AVB and U-bend design is based on elimination of gaps to the minimum required for manufacturing assembly of the U-bend region. This was accomplished by very tight controls on the ovalization of the tubes during bending. All U-bends are required to fall within a narrow tolerance range; this was achieved by managing the diameter of the starting tubing material. Further, tight dimensional controls were imposed on the AVBs and a manufacturing process was utilized to eliminate the twist during bending of the AVBs. Finally, the U-bend assembly process was tightly controlled to assure that the AVBs were installed in the design position and to the design depth.

Also, the RSG AVB design includes 3 sets (up to 6 intersections per adjacent tube) of AVBs instead of the 2 utilized in the first generation Farley SGs. The AVBs are also wider than the original SG AVBs and manufactured from 405SS, which has a significantly lower wear rate in conjunction with the Alloy 690 TT tube material, than the original SG Alloy 600/Alloy 600 material couple. All of the design improvements noted above minimize the probability of an unsupported tube span of sufficient length to create the potential for tube vibration. Further, should vibration occur at isolated tubes, the wear rate of tubes will be significantly reduced compared to early industry operating experience.

The operating experience for the improved AVB design has been flawless at IP3 and similar SGs in US plants. A single non-US plant with Westinghouse-design replacement SGs (Model D60) manufactured under contract, whose AVBs were to have been installed under similar controls, has reported significant AVB wear; this was detected within 2 cycles operation. Investigation of the assembly practices is expected to identify departures from the AVB assembly specifications.

Question NL-04-073-DOS-1:

For the fuel handling accident (FHA) the licensee assumed gap fractions from RG 1.25, which are higher than those in RG 1.183, because it could not ensure that all fuel would meet the limitations in Footnote 11 to RG 1.183 Table 3. However, RG 1.183 Table 3 gap fractions were utilized in the analysis of the locked rotor accident. Explain the basis for the different treatment of the fuel gap activity between the two accident analyses. Also, explain why the fuel subject to the FHA is not ensured to meet the RG 1.183 Table 3 footnote.

Response NL-04-073-DOS-1:

Analysis of the IP3 core shows that with the 15 x 15 fuel design, combined with the current fuel cycle length and the stretch power uprate, it can be expected that there will be high-burnup fuel that does not meet the limitations identified in Footnote 11 of RG 1.183 regarding the applicability of the Table 3 gap fractions. It is possible that certain fuel assemblies may have all fuel rods outside the Footnote 11 guidelines of ≤6.3 kw/ft peak rod average power combined with a burnup >54,000 MWD/MTU. The FHA analysis may involve any fuel assembly in the core and thus needs to consider the possibility that the accident may involve an assembly that has a burnup in excess of 54,000 MWD/MTU together with peak rod average power >6.3 kw/ft.

For the locked rotor accident, the fuel rods that would potentially be damaged due to violation of the DNB limit are those fuel rods operating at high power levels relative to core average. The high-burnup fuel rods would not be among the fuel rods operating at high power levels. Thus, it is appropriate to use the gap fractions from Table 3 of RG 1.183 for the locked rotor accident. For IP3, there is no predicted fuel damage. The assumption of 5% fuel damage has been adopted for the radiological consequences analysis in order to provide an analysis that would bound possible future changes. It is noted that if a large fraction of the core were predicted to fail, this argument would need to be examined further to confirm continued applicability.

Question NL-04-073-DOS-2:

The FHA is analyzed for fuel that has decayed 84 hours. By what means is an FHA prevented before that time?

Response NL-04-073-DOS-2:

The current IP3 licensing basis for the FHA uses an 84-hour decay period. Facility administrative controls prevent fuel movement prior to 84 hours.

Question NL-04-073-DOS-3:

The steam generator alkali metal partition coefficient (0.001) used in several analyses is based on the steam generator moisture carryover percentage. How was the moisture carryover determined?

Response NL-04-073-DOS-3:

As stated in Section 5.6 of the report, the performance of steam generator moisture separator packages is primarily determined by three operating parameters: steam flow (power), steam

pressure, and water level. For the moisture separator performance data evaluation, steam flow and steam pressure are combined into a single parameter designated as the separator parameter (SP). A correlation for moisture carryover as a function of SP is used to predict the moisture carryover at defined conditions. The SP values for the IP3 SPU conditions were calculated using the results of the GENF program. The moisture carryover was calculated at the SPU conditions with 10-percent steam generator tube plugging and was determined to have a maximum value below the 0.10 percent design limit.

Question NL-04-073-DOS-4:

How were the LOCA dose emergency core cooling system (ECCS) leakage iodine airborne fractions determined? Provide a detailed explanation of the calculation or the calculation itself.

Response NL-04-073-DOS-4:

The calculations utilized the same methodology as contained in the Polestar calculations provided in the supplemental IP2 (Docket 50-247) AST Pilot Program submittal provided April 13, 2000 in response to NRC Requests for Additional Information. As discussed in that submittal, the calculations determined iodine partition coefficients both with and without credit for boundary layer effects.

For the IP3 SPU application, the calculation inputs were revised to reflect an earlier switchover time to hot-leg recirculation (i.e. bringing ECCS recirculation fluid outside containment at 6.5 hours as opposed to the 14 hours assumed previously) including changes in fluid temperature. The results presented in the IP3 SPU LAR do not credit the boundary layer effect. As presented in the April 13, 2000 submittal, crediting boundary layer effect produces an additional DF of 10, reducing the resultant dose from ECCS leakage by a factor of 10.

Question NL-04-073-DOS-5:

For the volume control tank, gas decay tank and holdup tank failure dose analyses, the results were compared to a criterion of 0.5 rem total effective dose equivalent (TEDE). If a licensee chooses to change to a TEDE dose criterion for these non-design-basis accidents, the NRC staff's position is that these systems are evaluated against the dose limits for individual members of the public in 10 CFR 20.1301, and the regulatory dose criterion should be 0.1 rem TEDE. If the licensee would prefer to remain in its current licensing basis, the dose criterion remains 0.5 rem whole body. If Entergy chooses to update the licensing basis to TEDE for these analyses, the current analyses do not meet the regulatory criteria. Discuss how this issue is being addressed.

Response NL-04-073-DOS-5:

These non-design basis accidents will not report TEDE doses, but will report thyroid, whole body and beta-skin (control room only) doses. Therefore, the doses for the three events are:

	Gas Decay Tank Doses (rem)			Volume Control Tank Doses (rem)			Holdup Tank Doses (rem)		
	Whole Body	Thyroid	Beta-Skin	Whole Body	Thyroid	Beta-Skin	Whole Body	Thyroid	Beta-Skin
Site boundary	0.32	NA	NA	0.42	0.061	NA	0.38	0.07	NA
LPZ	0.12	NA	NA	0.16	0.023	NA	0.14	0.03	NA
Control Room	0.021	NA	3.4	0.022	0.018	2.5	0.03	0.05	3.6

The offsite whole body doses are below the 0.5 rem limit defined in RG 1.26. The thyroid dose equivalent to 0.5 rem whole body is determined based on the organ dose-weighting factor of 0.03; this results in a thyroid dose limit of 16.7 rem. The offsite thyroid doses are all below this value.

The control room whole body doses are below the 5.0 rem limit defined in GDC 19. The thyroid and beta-skin dose limits in the control room have been defined in Section 6.4 of the SRP as 30 rem. The control room thyroid and beta-skin doses are below this value.

Question NL-04-086-FDF-1:

In Section 7.1 of Attachment III (Application Report) to the January 29 letter, the licensee states the fuel assembly structural integrity is not affected and the core coolable geometry is maintained for the 15x15 Vantage+ fuel assembly design and the 15x15 upgraded fuel assembly for IP2 under SPU conditions.

Provide the technical basis that shows the upgraded fuel assembly's structural integrity and the core coolable geometry are maintained under the SPU conditions

Response NL-04-086-FDF-1:

The response this question contains proprietary information. The proprietary and non-proprietary versions of the response are provided in Attachments 3 and 4 of this letter, respectively.

Question NL-04-086-FDF-2:

Regarding the fuel core design description of analyses and evaluations in Section 7.3.3, it states that conceptual models were developed that followed the uprate transition to an equilibrium cycle and that the SPU evaluation assumed a core thermal power level of 3216 MWt during the three transition cycles.

State whether the core is being treated as a mixed core during the transition cycles. Also, explain how fuel damage was analyzed in a seismic event for the mixed core as it transitions to

a homogeneous 15x15 upgraded fuel loading and describe the worst case scenario analyzed. In addition, provide the technical justification that shows structural integrity at the SPU condition for the mixed core is maintained in a loss-of-coolant accident (LOCA) coincident with a seismic event at IP2.

Response NL-04-086-FDF-2:

The response this question contains proprietary information. The proprietary and non-proprietary versions of the response are provided in Attachments 3 and 4 of this letter, respectively.

Question NL-04-086-FDF-3:

In Section 7.1 of the Application Report, the licensee states the level of fuel rod fretting, oxidation and hydriding of thimbles and grids, fuel rod growth gap, and guide thimble wear was acceptable.

Provide a reference to the document which provides the analytical results, and list the numerical values for these parameters along with their acceptable limit for the SPU conditions. Also, explain how the analysis performed for IP2 SPU conditions met the applicable regulatory criteria and indicate whether the methodology used has been previously approved by the staff.

Response NL-04-086-FDF-3:

The response this question contains proprietary information. The proprietary and non-proprietary versions of the response are provided in Attachments 3 and 4 of this letter, respectively.

Question NL-04-086-FDF-4:

In Section 7.1 of the Application Report, the licensee states that analyses verified the fuel assembly holddown spring's capability to maintain contact between the fuel assembly and the lower core plate at normal operating conditions for the SPU.

Describe the analyses performed to justify this statement. Additionally, provide the numerical values that show the design criteria are met.

Response NL-04-086-FDF-4:

The response this question contains proprietary information. The proprietary and non-proprietary versions of the response are provided in Attachments 3 and 4 of this letter, respectively.

Question NL-04-086-FDF-5:

In the Fuel Criterion Evaluation Process (FCEP) Notification of the 15x15 Upgrade Designs submitted by Westinghouse Electric Company to the NRC on February 6, 2004, Westinghouse states that evaluations of the 15x15 upgraded fuel assembly design for seismic and LOCA loading at IP2 have been performed in accordance with the "Reference Core Report 17x17 Optimized Fuel Assembly" methodology.

Provide the technical justification showing that the 17x17 design/method referenced is applicable to the 15x15 fuel design.

Response NL-04-086-FDF-5:

On page 7 of 15, under Section e. "Fuel Assembly Structural response to Seismic/LOCA Loads" of the FCEP notification to the NRC regarding the 15 x 15 upgrade design (LTR-NRC-04-8 Dated February 6, 2004) Westinghouse states: *"Evaluations of the Upgrade fuel assembly design for seismic and LOCA loading at Indian Point Unit 2 has been performed in accordance with approved methodologies [(6)]."*

Although the NRC notification letter specifically makes the statement for Indian Point Unit 2, the seismic and LOCA loading evaluations performed for Indian Point Unit 3 utilized the same approved methodologies.

The indicated reference 6 cites:

6. *Davidson, S. L and Iorii, J. A. (Eds), et al., "Reference Core Report 17 x 17 Optimized Fuel Assembly," WCAP_9500-A, May 1982; Beaumont, M. D. and Skaritka, J. (Eds.), et al., "Verification testing and Analysis of the 17 x 17 Optimized Fuel Assembly," WCAP-9401-P-A March 1979; and Davidson, S. L, and Iorii, J.A (Eds.), et. Al. "Supplement Acceptance Information for NRC Approved Version of WCAP9401/9402 and WCAP-9500," February 1983.*

The references cited were approved by the NRC for the intended application in WCAP-12488–P-A; "Westinghouse Fuel Criteria Evaluation Process" by the NRC. On page 5.3 of the SER/TER "Technical Evaluation Report of the Topical Report WCAP-12488, Westinghouse Fuel Criteria Evaluation Process" by C.E. Beyer dated March 1993, under 5.4 "Fuel assembly Structural damage from External Forces"; Evaluation, it states: *"Generic analysis methods for performing combined LOCA-seismic loading analysis have been described by W in WCAP 9401-P-A (and WCAP-9402-A (Reference 26). These analysis methods not only include the fuel assembly structural response, but also fuel rod cladding loads. These methods have been approved by the NRC and therefore, PNL concludes they remain acceptable for application to W fuel design changes."*

In the SER for WCAP-9500 and WCAP-9401-P-A the NRC discusses the generic analysis methodology used to evaluate the 17 x 17 Optimized Fuel Assembly. The Methodology essentially consisted of four mathematical models: a system model, a detailed core model, a lateral Fuel Assembly model, and an Axial Fuel Assembly Model. Details of the methodology are described in WCAP-9401-P-A.

In the NRC's SER approval for WCAP-9500-A, the following statement was made:

"The methodology described applies not only to 3 and 4 loop 17 x 17 plants but generically for plants having other standard arrays (e.g., 14 x 14, 15 x 15 and 16 x 16)."

This methodology was captured in Chapter 18 of WCAP-9500-A, and included seismic and LOCA loads. The methodology was further described in WCAP-9401-P-A. For each fuel transition, the "new" design has been compared to the previous design. For the analysis of the combined seismic and LOCA loads, there has been no change that would invalidate the original methodology that was shown and stated to be applicable to all Westinghouse fuel arrays.

WCAP-12488 -P-A "FCEP" is not limited to any specific fuel design or geometry, and has been in use since March 1993 based on the NRC approval of this methodology for evaluating Westinghouse fuel changes. Westinghouse has been following the methodology described and approved for Seismic and LOCA Analysis. While the methodology used for IP3 is the same as that referenced in WCAP-9500/WCAP-9401, separate calculations and evaluations were conducted for IP3 based on the SPU conditions.

Further discussion of the methodology and interfaces for the fuel structural analysis methodology is provided in responses to NL-04-086-FDF-1 and NL-04-086-FDF-2.

Question NL-04-086-FDF-6:

In Section 7.4 of the Application Report, the licensee states rod internal pressure and clad fatigue criteria were met for the SPU condition. The licensee also states a vessel average temperature of 549°F resulted in violation of the clad fatigue criterion.

Provide the technical justification explaining how maintaining a vessel temperature of 562 ± 3°F will meet the rod internal pressure and clad fatigue criteria for the SPU operation. Also, provide the analytical basis that shows the clad fatigue criterion is met under SPU core conditions with a vessel average temperature of 562 ± 3°F.

Response NL-04-086-FDF-6:

This RAI does not apply to IP3. It addresses specific results for the Indian Point Unit 2 analysis.

Question NL-04-095-LOC-1:

Provide a statement indicating that, prior to operating at the uprated power level, emergency operating procedures will be in place and operator training will be completed to ensure that the actions for switchover to hot leg injection will occur consistent with the stated times.

Response NL-04-095-LOC-1:

As stated on page 10-35 of WCAP-16212-P, training will be implemented prior to the SPU. Revised Emergency Operating Procedure (EOP) changes will be in place and operator training will be completed prior to operating at the uprated power level. This includes EOP changes for switchover to hot leg injection at 6.5 hours, and addition of additional auxiliary feedwater within 10 minutes, and training for these changes.

Question NL-04-095-LOC-2:

In Attachment III to the April 12 letter, the licensee stated that new well-mounted dual-element resistance temperature detectors (RTDs) will be inserted into two of the three thermowells and that the third thermowell will be capped for future use.

Provide a justification for the insertion of only two of the three thermowells. Explain if there will be any configuration changes to the current design and if there are any effects on the temperature measurement for the SPU condition.

Response NL-04-095-LOC-3:

The RTDs for IP3 are not being replaced. This RAI does not apply to IP3.

Question NL-04-095-LOC-3:

The LOCA submittals did not address slot breaks at the top and side of the pipe.
Justify why these breaks are not considered for the IP2 LBLOCA response

Response NL-04-095-LOC-3:

See response NL-04-100-LOC-3. (Response to be provided later.)

Question NL-04-095-LOC-4:

Provide the LBLOCA analysis results (tables and graphs, as appropriate) to the time that stable and sustained quench is established.

Response NL-04-095-LOC-4:

See response NL-04-100-LOC-3. (Response to be provided later.)

Question NL-04-095-LOC-5:

Tables 6.2-3 and 6.2.5 in the Application Report provide LBLOCA and SBLOCA analyses results for the IP2 SPU.

Provide all results (peak clad temperature, maximum local oxidation, and total hydrogen generation) for both LBLOCA and SBLOCA. For maximum local oxidation include consideration of both pre-existing and post-LOCA oxidation, and cladding outside and post-rupture inside oxidation. Also include the results for fuel resident from previous cycles.

Response NL-04-095-LOC-5:

See response NL-04-100-LOC-3. (Response to be provided later.)

Question NL-04-095-NFS-1:

In Section 4.1.7 of the Application Report, the licensee discusses the spent fuel pool (SFP) cooling system. However, the information is only described in general terms and conditions.

Describe the specific methods and controls that will be used to perform the cycle specific calculations required to determine that the SFP cooling system can remove the additional heat load and maintain operating conditions within current design. Are these calculations done in accordance with approved methods?

Response NL-04-095-NFS-1:

At IP3, procedural restrictions are established to ensure that the Spent Fuel Pit Cooling System will maintain SFP bulk temperature to within the maximum allowable 200°F and that the time to boil upon loss of SFP cooling will be no less than 49.2 minutes, as noted in the FSAR.

The procedural restrictions shall be prepared on a cycle-by-cycle basis and shall consider the decay heat load from the offloaded core and the residual heat from previously discarded fuel in the SFP. Decay heat is calculated using the methodology of Branch Technical Position ASB 9-2 in the NRC Standard Review Plan. A penalty of 10% on heat source term is applied as recommended by the BTP. Because the vast majority of decay heat in the SFP comes from the recently-discharged core, the 10% penalty more than compensates for any non-conservatism associated with decay heat calculation for very old fuel in the SFP.

The earliest time at which a fuel assembly may be removed from the core is 84 hours. Entergy recognizes that the heat load from a single assembly, or a small group of assemblies, has little effect on SFP heat load. The most significant impact comes toward the end of core offload, at which time the core has been unloaded and the greatest amount of heat has been added to the SFP. Accordingly, the procedural controls focus more upon the latter part of the offload process, and a curve is prepared showing the maximum allowable number of fuel assemblies discharged versus time after shutdown. This curve is prepared in accordance with standard Entergy procedures, it is controlled by Reactor Engineering and it shall be formally incorporated into refueling procedures.

The curve is calculated by balancing the normal reduction of heat load due to decay with the heat added to the SFP by the transfer of each individual fuel assembly to the SFP. As the core is unloaded, the SFP integral heat load increases, but as the fuel decays, the heat load from each assembly decreases.

In most cases, the normal delays associated with execution of core offload will ensure that the maximum number of offloaded assemblies vs. time will be consistent with the limitations of the curve. However, in the event that core offload proceeds in a rapid manner without delays, the curve allows Entergy to anticipate when offload must be suspended to ensure SFP heat load stays within FSAR limits (i.e., 35 MBTU/hr for a full core offload). If it becomes necessary to suspend core offload, other activities shall be scheduled during this suspension (e.g., extraction of a reactor vessel capsule) until it becomes practical to resume core offload.

Question NL-04-095-MDT-1:

Table 3.1-1 of the Application Report compares the design parameters used in the existing design transient development and for the stretch power uprate. The licensee indicated that the current design transients remain bracketing and applicable for the SPU. In addition, these IP2 specific design transients have been used in the NSSS component stress analyses and evaluations presented in Section 5 of this report. The licensee further stated that even though the existing design transients bracket the SPU Program, all of the design transients were

redeveloped based on the SPU Program design parameters shown in Table 3.1-1 and re-transmitted to the analysts for use in the IP2 SPU Program.

In light of Table 3.1-1, the cold leg temperature range (between 514.3 to 538.2°F) appears to be more severe than the current design basis cold leg temperature range. Provide a comparison of the design basis transients used in the current design basis transients and the stretch power uprate conditions for NSSS components stress and fatigue analysis. Clarify how the current design basis transients are applicable for the SPU conditions.

Response NL-04-095-MDT-1:

This RAI does not apply to IP3.

Question NL-04-095-PS-1:

In Section 9.9.3 of the Application Report, the justifications provided on page 9.9-3 for not evaluating the piping and support systems where the increase in temperature, pressure and flow rate are less than 5 percent of the current rated design basis condition are qualitative and nonspecific. For instance, the licensee stated that these increases are some what offset by conservatism in analytical methods used. The licensee also indicated that conservatism may include the enveloping of multiple thermal operating conditions.

Provide the technical basis for not evaluating these piping and support systems. The technical justifications should be based on specific quantitative assessment or intuitively conservative deduction. Also, discuss how the flow effects on the transient loads, which may increase non-proportional to the ratio of flow rate change, are considered (see page 9.9.2).

Response NL-04-095-PS-1:

Response to be provided later.

Question NL-04-095-GIP-1:

On page 10-22, the licensee indicated that the effect of the SPU on the current pressure locking and thermal binding (PLTB) evaluation of safety-related motor-operated valves (MOVs) and air-operated valves (AOVs) was reviewed. It was determined that the SPU does not introduce any increased challenge for thermal binding and/or pressure locking and does not effect the results and conclusions of the current evaluation.

Provide a summary of the evaluation of SPU effects on PLTB in response to Generic Letter (GL) 95-07 for power-operated valves (POVs) including MOVs and AOVs, with respect to the changes of the parameters such as maximum open and close differential pressure, maximum open and close line pressure, flow rate, fluid, fluid temperature, and ambient temperature, that might affect the valve performance.

Response NL-04-095-GIP-1:

Evaluation of the effect of the SPU on the potential for thermal binding and pressure locking of safety-related power-operated valves in response to GL 95-07 is contained in the response to Generic Issues and Programs, Question 12.

Question NL-04-095-GIP-2:

On page 10-23, the licensee indicated that an isolated water condition is assumed to exist between 2 MOVs in the return line from loop no. 2 hot leg to the suction of the residual heat removal (RHR) pumps inside containment. The curve for containment temperature as a function of time following a LBLOCA is an input used in the analysis of this piping segment. Due to the relatively small differences between the containment temperature profile used in this analysis and the containment temperature profile for a LBLOCA under SPU conditions, and a greater than 30-percent margin between the calculated maximum pressure and the maximum allowable pressure under Updated Final Safety Analysis Report (UFSAR) criteria, the stresses in this line under SPU conditions continue to remain within UFSAR allowable.

Discuss quantitatively how much the pressure will increase due to the increased temperature for the stretch power uprate since the increase in pipe stress is not linearly proportional to the increase in temperature in the isolated piping segment.

Response NL-04-095-GIP-2:

This RAI does not apply to IP3.

Question NL-04-095-GIP-3:

In item 49 of the April 12 letter, the licensee indicated that piping systems (i.e., main steam, extract steam, feedwater heater drain and vents, moisture separator and reheater drains, boiler feedwater, and condensate systems) affected by flow increase associated with stretch power uprate, were visually observed to determine if any existing vibration concerns exist. As a follow-up to this visual inspection, walkdowns will be conducted during the increase to SPU power. The acceptance criteria are based on displacement or velocity screening criteria.

Provide a summary of the evaluation for flow effects on the main steam line vibration, which will be increased for the SPU condition. Discuss the plan and schedule of the vibration monitoring program with regard to the power ascension, monitoring methods (installing accelerometers, using hand-held devices), strategic locations of monitoring, and acceptance criteria. Confirm whether the vibration monitoring will be performed for the affected system piping and components in accordance with the American Society of Mechanical Engineers Operations and Maintenance (OM) Code.

Response NL-04-095-GIP-3:

The response to Reference 1, Item 49, includes the Indian Point Piping Vibration (PV) Plan Logic to be implemented in support of the IP3 SPU. The PV Plan Logic identifies activities to be performed prior to implementation of the uprate and activities to be performed in coordination with the testing program for increasing power to the uprate power level. Activities which have been completed include: (1) Review of PV Condition Reports (CRs) and interviews of key plant personnel regarding PV issues, (2) Documentation of PV acceptance criteria, and (3) Performance of drawing reviews and walkdowns of selected piping systems to identify any existing pre-uprate vibration concerns.

The flow effects on Main Steam System lines are not expected to increase the piping vibration. However, vibration monitoring will address any piping vibration not meeting the piping vibration acceptance criteria.

Vibration monitoring methods will be addressed in the test plan developed in support of the IP3 PV Plan.

The IP3 PV Plan utilizes the guidelines of Reference 2.

References:

1. Indian Point Unit 2 Letter to the NRC, "Supporting Information for License Amendment Request Regarding Indian Point 2 Stretch Power Uprate (TAC MC 1865), April 12, 2004.

2. ASME OM-S/G, "Standards and Guides for Operation and Maintenance of Nuclear Power Plants," Part 3, "Requirements for Preoperational and Initial Start-Up Vibration Testing of Nuclear Power Plant Piping Systems."

Question NL-04-095-GIP-4:

Provide a summary evaluation of the effect of the stretch power uprate on the design basis analysis for high energy line breaks, intermediate energy line breaks, jet impingement and pipe whip restraints.

Response NL-04-095-GIP-4:

Applicable rupture postulation criteria and related design basis documents for Indian Point Unit 3 were reviewed and changes to piping system stress levels resulting from SPU were reconciled against these design basis documents. The evaluations performed concluded that the SPU does not result in any new or revised break locations, and the design basis for pipe break, jet impingement, and pipe whip considerations remains valid for SPU.

Question NL-04-095-GIP-5:

Section 10.2, "Generic Letter 89-10 Motor-Operated Valve Program," states that the flowrate for the feedwater pump discharge isolation valves will increase due to SPU conditions at IP2. Discuss the evaluation of the increased flowrate on the performance of these MOVs.

Response NL-04-095-GIP-5:

Section 10.2 of the IP3 LAR states the following:

> Evaluation of the impact of the SPU on the differential pressure (DP) calculations for GL 89-10 MOVs in Balance-of-Plant systems shows that the SPU has no impact on the maximum differential pressures / line pressures determined in the current MOV DP calculations for MOVs in the Main Feedwater System (refer to Section 9.4).

Main Feedwater System MOVs included in the GL 89-10 MOV Program include the Main Feedwater Pump (MFP) discharge isolation valves, main feed regulating valve isolation valves, and the low-flow (bypass) regulating valve isolation valves.

Design inputs utilized in the current Main Feedwater System MOV DP calculations include MFP minimum suction pressure setpoint, MFP head on recirculation, MFP speed controller maximum

discharge pressure setpoint, Condensate Pump shutoff head, Condensate Pump pressure at design point, and MFP head during coastdown. These inputs are not affected by the SPU.

Also used as an input in the MOV DP calculations is steam generator pressure following a MSLB inside containment. It was verified that the values for this parameter used in the calculations were conservative with respect to SG pressure following a MSLB inside containment under SPU conditions.

Although there will be a small increase in feedwater flowrate under SPU conditions, flowrate is not utilized as a design input in the Main Feedwater System MOV DP calculations.

Question NL-04-095-GIP-6:

Section 10.2 states that the changes in system flows, pressures, and temperatures in the NSSSs resulting from the SPU have been documented, and that there are no changes that affect the conclusions of the MOV Program for the NSSS MOVs.

Discuss the changes in system flows, pressure, and temperatures, and the evaluation of the impact on the performance of those MOVs.

Response NL-04-095-GIP-6:

Section 10.2 of the IP3 LAR states the following:

> For MOVs in Nuclear Steam Supply System (NSSS) systems, the changes in system flows, pressures, and temperatures resulting from the SPU have been documented. Changes in NSSS System parameters resulting from the SPU do not affect the conclusions of the MOV Program for MOVs in NSSS Systems.

The following is a discussion of changes in flows, pressures, and temperatures resulting from the SPU for the IP3 Nuclear Steam Supply System (NSSS) fluid systems, and the impact of any changes on the conclusions of the MOV Program for the GL 89-10 MOVs in these systems.

Reactor Coolant System (RCS)

As discussed in Section 4.1.1, the revised parameters that affect RCS performance are core power and the resulting full-load T_{cold} and T_{hot} temperatures. The RCS operating pressure and no-load RCS temperature have not changed. Based on the SPU RCS parameters, the RCS design temperature and pressure continue to bound the SPU operating conditions. The RCS System MOV calculations use pressurizer code safety relief valve setpoint pressure as an input; this parameter is not affected by the SPU. Therefore, the SPU does not affect the conclusions of the MOV Program for MOVs in the RCS.

Chemical & Volume Control System (CVCS)

As noted above, the RCS operating pressure has not changed. With respect to RCS/CVCS interfaces, temperature changes are as noted above for the RCS (Section 4.1.2). Changes in CVCS flow (relative to the slight temperature changes) are considered to be negligible. Based on changes in system parameters being slight / negligible, the SPU does not affect the conclusions of the MOV Program for MOVs in the CVCS.

Residual Heat Removal (RHR) System

There are no changes in the RHR System operating temperatures, pressures, flows, or RHR Pump head performance under SPU conditions. Therefore, the SPU does not affect the conclusions of the MOV Program for MOVs in the RHR System.

Component Cooling Water (CCW) System

There are no changes in the CCW System operating pressures or flows under SPU conditions during normal plant operation, plant cooldown, or post-accident operation (Section 4.1.6). The bounding CCW System temperatures have not changed as a result of the SPU. The bounding post-LOCA containment sump temperature has not changed. Accordingly, the SPU does not affect the conclusions of the MOV Program for MOVs in the CCW System.

Safety Injection System

High Head Safety Injection (HHSI) System

The HHSI Pump maximum flow limits have not changed. The RWST maximum temperature remains unchanged at 110°F. The HHSI Pump maximum head has not increased. As discussed in Section 4.1.4, HHSI hot leg and cold leg flows will increase under SPU conditions. However, since the system MOV calculations use HHSI Pump shutoff head as an input, and not system flowrates, the SPU does not affect the conclusions of the MOV Program for MOVs in the HHSI System.

Low Head Safety Injection (LHSI) System

The LHSI Pump maximum flow limits have not changed. The RWST maximum temperature remains unchanged at 110°F. As indicated above, RHR Pump head performance has not changed under SPU conditions. As discussed in Section 4.1.4, LHSI cold leg flows will increase under SPU conditions. However, since the system MOV calculations use LHSI pump shutoff head as an input, and not system flowrates, the SPU does not affect the conclusions of the MOV Program for MOVs in the LHSI System.

Recirculation System

Recirculation System pump performance is not affected by the SPU. Since the system MOV calculations use Recirculation Pump shutoff head and developed head as inputs, the SPU does not affect the conclusions of the MOV Program for MOVs in the Recirculation System.

Containment Spray System (CSS)

The RWST maximum temperature remains unchanged at 110°F. The CSS Pump head performance has not changed. Since the system MOV calculations use CSS pump shutoff head as an input, the SPU does not affect the conclusions of the MOV Program for MOVs in the CSS.

Primary Sampling System (PSS)

As noted above, the RCS operating pressure has not changed. No system flow changes are expected. With respect to RCS/CVCS interfaces with the PSS, temperature changes are as noted above for the RCS (Section 4.1.5). The PSS System MOV calculations use Recirculation Pump shutoff head as an input; this parameter is not affected by the SPU. Therefore, the SPU does not affect the conclusions of the MOV Program for MOVs in the Primary Sampling System.

Question NL-04-095-GIP-7:

Section 10.2 states that the effect of MOV operating parameter changes on related GL 89-10 parameters (e.g., valve dynamic thrust values) has been evaluated and determined to be acceptable.

Discuss the MOV operating parameter changes, the related GL 89-10 parameters, and the evaluation that found those changes to be acceptable.

Response NL-04-095-GIP-7:

As addressed in the response to NL-04-095-GIP-5, parameters used in the MOV DP calculations for MOVs in the Main Feedwater System are either not affected by the SPU, or parameter values are conservative with respect to similar parameter values under SPU conditions

As addressed in the response to NL-04-095-GIP-6, changes to parameters in the MOV DP calculations for MOVs in NSSS systems do not affect the conclusions of the MOV Program for MOVs in these systems.

Question NL-04-095-GIP-8:

Section 10.2 states that the environmental data review determined that the changes in maximum ambient temperatures at MOV locations are acceptable.

Discuss the maximum ambient temperature changes, and the evaluation that determined the impact on MOV performance to be acceptable (including consideration of Limitorque Technical Update 93-03, as applicable).

Response NL-04-095-GIP-8:

Section 10.2 of the IP3 LAR states the following:

> The impact of the SPU on peak ambient temperatures in plant locations containing environmentally qualified equipment is addressed in Section 10.8 of this report. Review of the environmental data in this section shows that accident peak ambient temperatures under SPU conditions are bounded by the accident peak ambient temperatures under existing (pre-uprate) conditions. Accordingly, the SPU does not affect the results of current evaluations of MOV motor torque degradation due to elevated ambient temperatures.

The IP3 evaluation of the effects of reduced motor output torque due to elevated ambient temperatures for MOVs included in the GL 89-10 Program used the following maximum ambient temperatures:

- For MOVs located inside containment, the peak temperature under pre-uprate design basis accident (DBA) conditions documented in the EQ Program was used.
- For MOVs located outside containment in the Service Water Pipe Chase area, the peak temperature under pre-uprate steam generator blowdown high energy line break (HELB) conditions documented in the EQ Program was used.
- For MOVs located outside containment in the Pipe Penetration Area, Safety Injection Pump Room, Feedwater Regulating Valve Area, and the Post-Accident Sampling Area, temperatures equal to or greater than the peak temperature under normal operating conditions documented in the EQ Program were used.
- For MOVs located outside containment in the Turbine Building, the maximum ambient temperature specified in Reference NL-04-095-GIP-8-1 was used.

Evaluation of the impact of the SPU on the above follows:

- As indicated in Section 10.8.2.2, the pre-uprate accident temperature profile documented in the EQ Program bounds the LOCA temperature profile under SPU conditions.
- As indicated in Section 10.8.3.2, for areas affected by the steam generator blowdown HELB, no change in accident temperatures is necessary.
- As indicated in Section 10.8.3.1, temperatures during normal operation remain unchanged.

Accordingly, the SPU does not affect the conclusions of the evaluation of motor torque degradation / motor de-rate due to elevated ambient temperature for MOVs inside and outside Containment.

Reference:

NL-04-095-GIP-8-1 Specification TS-MS-003, Rev. 7, "Technical Specification for Piping and Equipment Insulation," Rev. 7.

Question NL-04-095-GIP-9:

Section 10.2 states the analysis of a steamline break inside containment under SPU conditions takes credit for operation of the feedwater control valve isolation MOVs, and that these MOVs will be added to the GL 89-10 program.

Provide the analysis that verifies the capability of the feedwater control valve isolation MOVs to perform their credited function under design-basis conditions (including procurement and maintenance history, actuator sizing and setup calculations, and static and dynamic diagnostic test results).

Response NL-04-095-GIP-9:

The feedwater control valve isolation MOVs (BFD-5 valves) have previously been included in the GL-89-10 program. This RAI does not apply to IP3.

Question NL-04-095-GIP-10:

Section 10.7, "In-Service Inspection/In-Service Testing Programs," states that the effect of changes on these programs from the SPU will be evaluated as part of the engineering change process.

Discuss, with examples, the evaluation of the impact of the SPU conditions on the performance of safety-related pumps, POVs (including air-operated valves), check valves, and safety or relief valves. Discuss any resulting adjustments to the in-service testing program.

Response NL-04-095-GIP-10:

The following response addresses impact of the SPU on the performance of IP3 safety-related pumps and valves in Nuclear Steam Supply System (NSSS) fluid systems and applicable Balance of Plant (BOP) systems, including impact on the IST Program:

NSSS Fluid Systems

As addressed in the response to RAI GIP-6, the SPU has no / negligible impact on system operating pressures / flowrates or pump performance for the following systems: Reactor Coolant System, Chemical & Volume Control System, Primary Sampling System, Residual Heat Removal System, Component Cooling Water System, Recirculation System, and Containment Spray System. Accordingly, the SPU has no impact on IST Program requirements for safety-related pumps and valves in these NSSS Systems.

As discussed in Sections 1.5 and 4.1.4, High Head Safety Injection (HHSI) System hot leg and cold leg flows, and Low Head Safety Injection (LHSI) System cold leg flows, will increase under SPU conditions. The IST procedures for affected valves in these systems will be revised for the SPU to reflect the changes in HHSI and LHSI branch line flows.

BOP Systems

Auxiliary Feedwater (AFW) System

No changes are being implemented under SPU conditions for the safety-related pumps and valves in the AFW System that would impact IST Program requirements for these components (Section 9.12).

Service Water (SW) System

As addressed in Section 9.6, the SPU does not affect the flow requirements for any safety-related equipment cooled by the SW System. The SW System remains capable of performing its heat removal functions (safety and nonsafety) specified for each component for all applicable operating modes. Accordingly, the SPU has no impact on IST Program requirements for safety-related pumps and valves in the SW System.

Containment Purge and Pressure Relief System

Safety-related valves in the Containment Purge and Pressure Relief System include the Containment Building Inside and Outside Pressure Relief Valves. These valves are not included within the ISI Code boundary and are tested as part of Augmented IST. As addressed in Section 9.11.5, operation under SPU conditions will not affect operation of the Containment Purge and Pressure Relief System. The containment purge and make-up capability are not impacted by the SPU. Accordingly, the SPU has no impact on IST Program requirements for safety-related valves in this system.

Main Steam (MS) System

Safety-related valves in the MS System include the Main Steam Isolation Valves (MSIVs), MS Non-Return Valves, Main Steam Safety Valves (MSSVs), MS Atmospheric Steam Relief Valves, and the Turbine Driven Auxiliary Feedwater (AFW) Pump Pressure Reducing Valve. As addressed in Section 9.1:

- The MSIVs and Non-Return Valves are of a check valve design, reverse-mounted in series on the MS headers. Reverse steam flow will assist in closing these valves. Accordingly, under SPU conditions of increased steam flow, the valves will continue to meet their design requirement of closing in 5 seconds or less.

- Maximum steam flow rate at 100 percent power under SPU conditions is significantly below the MSSV capacity. Also, MSSV setpoints are acceptable for operation under SPU conditions.

- Neither the capacity nor the setpoints of the Atmospheric Steam Relief Valves are changing under SPU conditions.

- The Turbine Driven AFW Pump Steam Control Valve reduces the supply pressure to the Turbine Driven AFW Pump to 600 psig or less when MS line pressure is higher than 600 psig. Under SPU conditions at full load, the pressure of the MS supply upstream of the control valve remains above 600 psig, thus providing sufficient pressure for normal operation of the valve.

Based on the above, the SPU has no impact on IST Program requirements for these MS System valves.

Main Feedwater (FW) System

Safety-related valves in the FW System include the Feedwater Pump Discharge Isolation Valves, the Main Feedwater Flow Control Valves, and the SG Feedwater Inlet Check Valves.

As addressed in the response to RAI GIP-5, the SPU does not impact the maximum differential pressures determined in the GL 89-10 MOV calculations for the Feedwater Pump Discharge Isolation Valves. These valves are not included within the ISI Code boundary and are tested as part of Augmented IST. The small increase in feedwater flowrate under SPU conditions will not affect IST Program requirements for these valves.

The Main Feedwater Regulating Valves will continue to operate within the acceptable control range under SPU conditions (Section 9.4). These valves are not included within the ISI Code boundary and are tested as part of Augmented IST. The small increase in feedwater flowrate under SPU conditions will not affect IST Program requirements for these valves.

The SG Feedwater Inlet Check Valves function to prevent leakage of water from the AFW System into the FW System. This function is not affected by the SPU, and therefore the SPU has no impact on IST Program requirements for these valves.

Steam Generator Blowdown (SGBD) System

Safety-related valves in the Steam Generator Blowdown System include the SGBD Containment Isolation Valves. As addressed in Section 9.5, the SPU does not affect the SG blowdown flowrates under current operating conditions or the established maximum flow limits for blowdown flowrate from the steam generators. Accordingly, the SPU has no impact on IST Program requirements for SGBD System valves.

Question NL-04-095-GIP-11:

Section 10.8.4, "SPU Equipment Qualification Evaluation," states that accident temperatures outside containment in the steam and feedline penetration area have been reanalyzed and result in higher temperatures, and that all equipment outside containment required for accident response have been justified as qualified.

Discuss the evaluation of any safety-related pumps and valves located in the steam and feedline penetration area, and the impact on their performance from higher temperature due to SPU conditions.

Response NL-04-095-GIP-11:

Response to be provided later.

Question NL-04-095-GIP-12:

Section 10.10, "Generic Letter 95-07," states that the effect of the SPU on the current pressure locking and thermal binding evaluation was reviewed, and that the SPU does not introduce any increased challenge for thermal binding and/or pressure locking and does not effect the results and conclusions of the current evaluation.

Discuss, with examples, the evaluation of the effect of the SPU on the potential for thermal binding and pressure locking of safety-related POVs, including consideration of increased ambient temperatures in applicable locations.

Response NL-04-095-GIP-12:

Response to be provided later.

Question NL-04-095-GIP-13:

Section 10.15.4, "Startup Testing," states that power escalation will be controlled by a specific procedure that includes controls for power escalation, hold points, and data collection requirements. Section 10.15.4 also states that a vibration monitoring activity will be initiated to monitor plant response at various power levels.

Discuss the plans for power escalation including specific hold points and duration, inspections, and plant walkdowns. Also, discuss the vibration monitoring activity including data collection methods and locations, baseline vibration measurements, and planned data evaluation.

Response NL-04-095-GIP-13:

Response to be provided later.

Question NL-04-095-GIP-14:

Discuss the evaluation of potential flow vibration effects resulting from SPU conditions for reactor pressure vessel internals, and steam and feedwater systems and their associated components, including impact on structural capability and performance during normal operations, anticipated transients (initiation and response), and design-basis conditions; and preparation for responding to the potential occurrence of loose parts as a result of the power uprate.

Response NL-04-095-GIP-14:

Response to be provided later.

Question NL-04-100-LOC-3:

The LOCA submittals did not address slot breaks at the top and side of the pipe. Justify why these breaks are not considered for the IP2 LBLOCA response

Response NL-04-100-LOC-3:

Response to be provided later.

Question NL-04-100-LOC-4:

Provide the LBLOCA analysis results (tables and graphs, as appropriate) to the time that stable and sustained quench is established.

Response NL-04-100-LOC-4:

Response to be provided later.

Question NL-04-100-LOC-5:

Tables 6.2-3 and 6.2.5 in the Application Report provide LBLOCA and SBLOCA analysis results for the IP2 SPU. Provide all results (peak clad temperature, maximum local oxidation and total hydrogen generation) for both LBLOCA and SBLOCA. For maximum local oxidation include

consideration of both pre-existing and post-LOCA oxidation, cladding outside and post-rupture inside oxidation. Also include the results for fuel resident from previous cycles.

Response NL-04-100-LOC-5:

Response to be provided later.

Regarding prior response to PVM RAI 3a provided in NL-04-073:

Question NL-04-100-PVM-3a-1:

When was the last time the Reactor Vessel nozzles were volumetrically examined?

Response NL-04-100-PVM-3a-1:

The Reactor Vessel Nozzle welds (B-D) consist of the following:
8 – Nozzle-to-Vessel welds (B3.90) 21 thru 28
8 – Nozzle Inside Radius Sections (B3.100) 21IR thru 28IR
The last volumetric inspection performed on these nozzle welds was September 1999.

Table 5.9-3 of WCAP-16212-P (transmitted in the initial license amendment request, NL-04-069 dated June 3, 2004) includes the Fracture Integrity Evaluation Summary for the outlet nozzle-to-shell region.

Question NL-04-100-PVM-3a-2:

Was the inspection technique qualified to ASME Section 8?

Response NL-04-100-PVM-3a-2:

No, the technique was not qualified to ASME Section 8. However, Ultrasonic examiners were qualified and certified to Level II or Level III in accordance with ASNT SNT-TC-1A as supplemented by the requirements of ASME Section XI, Subarticle IWA-2300, Appendix VII. Additionally, some of the UT Level III examiners had Appendix VIII Supplement 4 and 6 qualifications.

Question NL-04-100-PVM-3a-3:

What was the largest flaw?

Response NL-04-100-PVM-3a-3:

A total of 3 indications were recorded as subsurface flaws and found to be acceptable to the limits of ASME Section XI 1983 Edition up to and including Summer 1983 Addenda. The indications were evaluated to Subsection IWB-3512-1. 1 indication was recorded in Weld 22 and 2 indications were recorded in Weld 28.

Question NL-04-100-PVM-3a-4:

Provide comparison of the inspection technique / qualification from 1995 to today, for Reactor vessel nozzles.

Response NL-04-100-PVM-3a-4:

The applicability of inspections conducted in 1995 to the EPRI Performance Demonstration Initiative (PDI) is addressed in the following ASME technical paper: "Technical Basis for Elimination of Reactor Vessel Nozzle Inner Radius Inspections" from Proceedings of ASME 2001 Pressure Vessels and Piping Conference (Atlanta, Ga). The section entitled: "Nozzle Inner Radius Examination Capability from the Inside Surface" states that inspection capabilities were improved significantly in response to RG 1.150, in the time frame of 1983 through the late 80's and that those techniques were used directly without change to meet the PDI requirements brought forth recently.

Therefore, an examination of the reactor vessel conducted in 1999 used essentially the same techniques that would be used today, and called "PDI qualified".

Regarding prior response to PVM RAI 4a provided in NL-04-073:

Question NL-04-100-PVM-4a-1:

What is the temperature difference for the water entering the pressurizer shell for inadvertent aux. spray? Compare to the analysis of record. If the temperature difference between the SPU and current analysis increases, then provide the reanalysis.

Response NL-04-100-PVM-4a-1:

The temperature difference (delta-T) considered in the original analysis for inadvertent auxiliary spray is 621°F, which is the difference between pressurizer steam temperature of 653°F (saturation temperature at 2250 psia) and a conservatively low spray temperature of 32°F. These temperatures did not change due to IP3 Stretch Power Uprate. Moreover, the delta-T considered for inadvertent auxiliary spray (621°F) is significantly larger than those encountered during other transients, and hence envelopes all transient changes for the IP3 Stretch Power Uprate. Therefore, no re-analysis is required.

Regarding prior response to PVM RAI 4d provided in NL-04-073:

Question NL-04-100-PVM-4d-1:

When was the last time the pressurizer nozzles were volumetrically examined?

Response Question NL-04-100-PVM-4d-1:

Response to be provided later.

Question NL-04-100-PVM-4d-2:

Was the technique equivalent to VIP-108?

Response NL-04-100-PVM-4d-2::

Response to be provided later.

Question NL-04-100-PVM-4d-3:

What was the size of the largest flaw?

Response NL-04-100-PVM-4d-3::

Response to be provided later.

Questions regarding steam generator manway closure per conference call of July 29, 2004:

Question NL-04-100-SG-1:

Regarding prior response to SG structural integrity RAI 1 provided in NL-04-073:
Attachment I, page 67 of 76 of the response to RAI Question 1:

The licensee's application stated in Table 5.6-2 that, under SPU operating conditions, the fatigue usage factor for the secondary manway bolts was [ ] [a,c] (the design limit is 1.0), and that the bolts would have to be replaced after 34 years of operation, or sooner. Table 5.6-2 also stated that the fatigue usage factor for secondary manway studs was [ ] [a,c]. The licensee was asked to provide a basis for the 34-year target for secondary manway bolt replacement, and to describe how the bolt replacement target would be incorporated into the plant maintenance procedures. The licensee responded that the IP-2 replacement steam generators use secondary manway studs, not secondary manway bolts. The staff notes that Table 5.6-2 from the application is confusing since it contains entries for both secondary manway bolts and secondary manway studs, but the licensee states in the RAI response that only secondary manway studs are applicable to IP-2's replacement steam generators. Based on the licensee's response, the staff concludes that Table 5.6-2 contains information that is not relevant to the IP-2 SPU application (i.e., the information regarding secondary manway bolts).

A. Confirm that you are using secondary manway studs, not secondary manway bolts, in your replacement steam generators, and that the fatigue usage factor for these components is [ ][a,c].

B. Provide a cross-sectional drawing, which shows how the secondary manway studs are positioned in the licensee's replacement steam generators. The drawing should include the important dimensions and design features of a secondary manway stud and its location relative to the adjoining components.

C. Indicate on the drawing the areas of highest stress on a secondary manway stud.

Response NL-04-100-SG-1:

The IP3 replacement steam generators were installed with studs for secondary manway closure. This RAI does not apply to IP3.

Question NL-04-100-SG-3:

The licensee was asked to provide a table of primary stress calculation results for the shop welded plugs. The licensee responded by providing the table, which included a column for loading condition (design, operating, and test), a column of the calculated maximum stress intensities, and a column with the ASME Code limits. In the table for the "test" loading condition, the PL+Pb+Q maximum stress intensity term was calculated to be 41,962 psi. However, the ASME Code limit for this term was given as 34,950 psi. Apparently, the PL+Pb+Q maximum stress intensity calculated value is not within the ASME Code allowable value.

Explain why the calculation for PL+Pb+Q maximum stress intensity for the "test" loading condition is satisfactory, even though it exceeds the ASME Code requirement. Include a technical basis in your explanation.

Response NL-04-100-SG-3:

This RAI does not apply to IP3.

Question NL-04-121-NRC Item 1:

Recognizing the small decrease in the T_{cold} lower design value corresponding to a lower bound full-power programmed T_{avg} of 549°F for some components could be significant for fatigue evaluation, verify that the current design basis calculations have sufficient margin for all RCS components (RV, RVIs, piping/supports, pressurizer, RCPs, and SGs).

Response NL-04-121- NRC Item 1:

NSSS component fatigue evaluations are performed at either T_{cold} or T_{hot}, depending on whether T_{cold} or T_{hot} conditions are limiting. If T_{cold} is limiting, the T_{cold} value for a T_{avg} of 549°F is used. If T_{hot} is limiting, the T_{hot} value for a T_{avg} of 572°F is used. Nevertheless, as indicated in Note 12 for Table 2.1-2 (of WCAP 16212 submitted by NL-04-069), actual operation of Indian Point 3 (IP3) is limited to a minimum T_{cold} of 525°F to support the vessel integrity calculations discussed in subsection 5.1.2 of the WCAP. Based on this limit, evaluations of NSSS components for a T_{cold} of 517°F bound the actual operation of IP3 at the SPU power level. Structural evaluations of individual NSSS components are documented in Chapter 5 of the WCAP and show that stress and fatigue limits are met for the SPU evaluation conditions.

Question NL-04-121-NRC Item 2:

The Entergy response for Piping and Supports Question 1, in letter NL-04-095 dated August 3, 2004, provides a stress summary table for main steam piping. Please provide similar quantitative results for evaluations performed for other balance-of-plant (BOP) piping systems.

Response NL-04-121- NRC Item 2:

Response to be provided later.

Question NL-04-121-NRC Item 3:

Verify that controls are in place to assure that PCT sensitive parameters used in LOCA analyses bound plant-operating conditions.

Response NL-04-121- NRC Item 3:

Entergy Nuclear Operations, Inc. and Westinghouse have on-going processes which assure that the ranges and values of LOCA analyses inputs for Peak Cladding Temperature (PCT) sensitive parameters bound the as-operated plant ranges and values for those parameters.

Question NL-04-121-NRC Item 4:

The Entergy response for Steam Generator structural integrity RAI 3 in letter NL-04-073, dated June 16, 2004 applies a quality factor of 0.5 for determining the stress acceptance criteria. Please explain the use of this factor.

Response NL-04-121- NRC Item 4:

The shop weld plug is welded to the tube end using a full penetration weld. This weld geometry is similar to a corner weld configuration as shown in Figure N-462.3 (2) of the 1965 ASME Code, Section III, Article 4 (Equivalent to Figure NB-3352.3-1, Type 1b of later code years). The ASME Code of Record for the design of the steam generator is the 1965 ASME Code, through the Summer 1966 Addenda. The ASME Code, Section III, Article 4 (Section NB of later codes) does not require or specify a factor to be applied to the stress allowable values to reduce the values due to weld quality. It has been Westinghouse's approach to apply a weld quality factor to this weld of the shop weld plug to a tube. This is a conservative approach since the ASME Code is silent on applying a weld quality factor. The weld was analyzed based on the ASME Code, Section III, Article 4 and all stresses are found acceptable.

Question NL-04-121-NRC Item 5:

The Licensing Report (WCAP 16212 submitted by NL-04-069) describes the time to boil upon loss of cooling to the spent fuel pool changing from 1.8 hours to 1.67 hours. Discuss this change which the staff considers a change to the licensing basis needing prior NRC approval.

Response NL-04-121- NRC Item 5:

At IP3, the conservative estimate of maximum equilibrium Spent Fuel Pit bulk temperature is 200°F. This is immediately subsequent to full-core offload and takes no credit for auxiliary SFP cooling. The maximum allowable decay heat load is 35 MBTU/hour, which results in a time to boil of 49 minutes subsequent to a postulated loss of SFP cooling. This time interval was independently confirmed and approved by the NRC in Amendment No 90 to the IP3 Technical Specifications.

The 49-minute interval allows the operators time to either restore SFP cooling or to compensate for water loss through evaporation. Upon implementation of the Stretch Power Uprate Program, the maximum SFP bulk temperature and the time to boil will remain unchanged. This is because cycle-specific calculations will be prepared, in accordance with formal Entergy procedures, to determine the time controls needed to maintain SFP decay heat load to <35

MBTU/hr at all times. The calculations will be controlled by Reactor Engineering procedures and shall be incorporated into refueling procedures.

By maintaining SFP decay heat load below 35 MBTU/hr, the peak equilibrium temperature and the minimum time to boil, as specified in the FSAR, will be protected.

It should be noted that the estimate of 200°F for peak bulk temperature is conservatively high and presumes a river temperature of 95°F. In order to maintain a workable poolside environment, auxiliary cooling is routinely employed to maintain SFP bulk temperature below the alarm limit of 135°F during full-core offload conditions. In case of SFP cooling failure, the time to boil is significantly greater than two hours, assuming an initial temperature of <135°F.

Question NL-04-121-NRC Item 6:

Table 5.9-5 of WCAP 16212-P provides information regarding the fracture integrity evaluation for the pressurizer. The table indicates use of a flaw depth less than "¼ t " for the corner region of the safety and relief nozzles (0.5 inch flaw size used) and for the upper shell (0.15 inch flaw size used). Since these values do not meet the requirements of Appendix G of Section III of the ASME Code please cite the staff safety evaluation that approved the use of flaw sizes less than "¼ t " or provide other explanation regarding use of the specified flaw sizes.

Response NL-04-121-NRC Item 6:

In order to quantify the acceptable flaw size for the IP3 pressurizer upper shell and the safety and relief nozzles, an analysis using the ASME code Section III, Appendix G requirements was performed. This analysis was recently revised. The fracture mechanics analysis for the IP3 pressurizer upper shell has been revised to consider an updated technical evaluation of the spray characteristic of the inadvertent spray transient based on tests and analytical solutions that showed the spray droplet envelope remains well removed from the pressurizer wall at pressures above 1030 psia. This fracture mechanics analysis also included modified through-wall stresses for the governing location. Since the section thickness for the upper shell is 4.1875 inches, a 1/4t (1.05 inches) deep defect was conservatively postulated per Paragraph G-2120 of the ASME Code, Appendix G 1998 Edition. The analysis for the safety and relief nozzle was also revised using modified through-wall stresses. A defect of 1 inch was again postulated since the section thickness of the governing location for the pressurizer safety and relief nozzle is less than 4 inches. The results show that the maximum stress intensity factor K_I for the governing transient is less than K_{IR}. Therefore, it is concluded that the Indian Point Unit 3 Pressurizer Upper Shell and Safety & Relief Nozzle are in compliance with the ASME Code, Section III, Appendix G 1998 Edition requirements for the SPU conditions. Since the postulated flaw sizes meet the requirements of Appendix G (1/4t or 1 inch), the ASME Code does not require specific demonstration that the flaw sizes can be detected with the use of highly reliable non-destructive inspection techniques. The results are summarized below.

Fracture Integrity Evaluation Summary Indian Point Unit 2 – Pressurizer Upper Shell and Safety & Relief Nozzle			
Location	**Governing Transient**	**Flaw Depth (inch)**	**K_I/K_{IR}**
Upper Shell	Loss of Load	1/4t (1.05)	0.73
Safety & Relief Nozzle	Loss of Load	1	0.66

Question NL-04-121-NRC Item 7:

During a CVCS malfunction to induce a boron dilution transient, Entergy chose to use a mixing volume that is equal to the RHR and RCS volumes. This appears to be non-conservative. The staff feels that the transient involves, conservatively, only diluted water from the primary water storage tank is injected into the cold leg through the charging lines at maximum letdown rate. This flow would then only mix with the volume of water in the cold leg and downcomer and lower plenum provided the RCPs were on. If they are not on, then there is less justification for mixing and it may be a dilute slug entering the core to cause a local power spike. The staff questions why the licensee is assuming RHR and RCS volume as the mixing volumes.

Response NL-04-121-NRC Item 7:

Response to be provided later.

Question NL-04-121-NRC Item 8:

Section 5.10.4 of the Stretch Power Uprate Licensing Report (WCAP-16212) provides an estimated increase in PWSCC susceptibility of 22 percent for the reactor pressure vessel head penetrations as a result of the stretch power uprate. An increase of greater than 20 percent is considered by the NRC staff to be significant. Please provide additional information regarding the estimated increase in PWSCC susceptibility and is there a plan for RPV head replacement.

Also, Section 5.10.4 of the Stretch Power Uprate Licensing Report provides an estimated increase in PWSCC susceptibility of 9 percent for the RV hot leg nozzle weld as a result of SPU. How will the 9 percent increase be accommodated in the future?

Response NL-04-121-NRC Item 8:

Response to be provided later.

ATTACHMENT 4 TO NL-04-145

ADDITIONAL INFORMATION FOR IP3 SPU LICENSE AMENDMENT REQUEST

BASED ON NRC RAIs ISSUED FOR IP2 SPU

Non-Proprietary version of responses containing proprietary information (from Westinghouse transmittal PU3-W-04-153)

ENTERGY NUCLEAR OPERATIONS, INC.
INDIAN POINT NUCLEAR GENERATING UNIT NO. 3
DOCKET NO. 50-286

Question NL-04-073-RSA- 6:

As a result of the increased core thermal power for the SPU, the safety analysis limit DNBR and core thermal safety limits were revised. Specifically, the safety analysis limit (SAL) DNBR was revised from [ ]^{a,c} to [ ]^{a,c}. Provide the technical justification for the revision of the DNBR from [ ]^{a,c} to [ ]^{a,c}.

Response NL-04-073-RSA-6:

For the IP3 SPU, the SAL DNBR has been revised from [ ]^{a,c} in support of the proposed OTΔT trip setpoint revisions.

Sufficient DNBR margin has been maintained by performing the safety analyses to a SAL DNBR of [ ]^{a,c}, which retains [ ]^{a,c} DNBR margin as shown in the DNBR summary table provided in the response section for RSA RAI #7. Sufficient DNBR margin was conservatively maintained in the SAL DNBR to offset the rod bow, potential transition core, and plant operating parameter bias DNBR penalties.

Question NL-04-073-RSA-7:

Provide a table listing the DNBR margin summary. The values would include the DNBR correlation limit, DNBR design limit, SAL DNBR, DNBR retained margin, rod bow DNBR penalty, transition core DNBR penalty, and available DNBR margin left after the uprate.

Response NL-04-073-RSA-7:

The DNBR margin summary table for IP3 SPU is provided in the following table, which includes the DNBR correlation limit, DNBR design limit, SAL DNBR, DNBR retained margin, different DNBR penalties, and available DNBR margin after the SPU.

DNBR Margin Summary for IP3 SPU RTDP Analyses	
DNB Correlation	WRB-1
DNB Correlation Limit	1.17
Design Limit DNBR Typical Cell Thimble Cell	 1.23 1.22
Safety Analysis Limit DNBR Typical Cell Thimble Cell	a,c
DNBR Margin (between design and safety analysis limit DNBR) Typical Cell Thimble Cell	
DNBR Penalties Pressure Bias Temperature Bias Rod Bow[1] Transition Core[2]	
Net DNBR Margin after SPU (minimum)	

Notes: 1. Applicable to the grid spans without IFM grids.
2. DNBR margin is reserved to offset the potential transition core DNBR penalty if the upgraded fuel is used with the VANTAGE+ fuel.

Question NL-04-073-RSA-9:

Regarding the re-analysis of the uncontrolled RCCA withdrawal at power transient:

a. RETRAN (a system code) rather than a subchannel code such as VIPRE is used for the DNBR analysis. The use of the RETRAN DNBR model requires certain user-input values (not listed here because this is shown as proprietary on page 55 of WCAP-14882-P-A). Discuss how this user-input was determined for IP2.

b. One of the acceptance criteria for this event is that fuel centerline temperature remains less than the melting temperature. Provide the quantitative result which demonstrates the fuel centerline temperature acceptance criteria is met.

Response NL-04-073- RSA-9a:

a, c

[ ]

Response NL-04-073- RSA-9b:

The basis for the fuel centerline temperature acceptance criterion is described in WCAP-8745-P-A. As long as the maximum power level of the core limit does not exceed a prescribed heat flux limit ([ ]^{a,c} of rated thermal power as described above) for a wide range of reactivity insertion rates, initial power levels and minimum / maximum reactivity feedback conditions, the fuel centerline temperature acceptance criterion will be satisfied. The peak heat flux calculated in the Uncontrolled RCCA Withdrawal at Power analysis is [ ]^{a,c}, which is less than the prescribed limit.

Reactor Systems Question NL-04-073-RSA-10:

Regarding the RCCA drop/misoperation transient re-analysis:

a. The licensee states automatic rod withdrawal has been physically disabled at IP2. Provide the technical justification for this statement and how it affects the transient analysis.

b. The licensee states generic transient statepoints designed to bound specific plant types were examined and found to be applicable to IP2 at SPU conditions. Please reference the document from which these generic statepoints were derived from and explain how these are applicable to IP2.

c. Provide the quantitative results demonstrating the minimum DNBR remained above the SAL DNBR and the peak fuel centerline melt temperature criteria is met for the RCCA dropped event at SPU conditions in section 6.3.4.5.

d. The licensee addressed the misaligned RCCA transient and stated the DNBR did not fall below the SAL value when analyzed at the SPU conditions. Provide the quantitative analysis that shows DNBR did not fall below the SAL when analyzed at the SPU conditions for one RCCA fully withdrawn and one RCCA fully inserted.

e. Provide the analytical justification that shows the resulting linear heat generation rate was below that which would cause fuel melting in the RCCA misalignment transient analysis.

Response NL-04-073-RSA-10a and NL-04-073-RSA-10b:

Refer to Attachment 2

Response NL-04-073-RSA-10c:

The Westinghouse method for analysis of the dropped rod event confirms that the DNBR design basis is met by verifying that the conditions associated with the limiting pre-drop FΔH value are prevented by the initial conditions permitted by the technical specification FΔH value during a dropped rod event. The limiting pre-drop FΔH value during a dropped rod event includes the effects of the SPU conditions, through the use of plant-specific DNB limit lines, which would result in safety analysis limit DNBR being reached at the technical specification RTDP FΔH limit. These methods are more fully described in WCAP-11394-P-A, and have been approved. The limiting pre-drop FΔH value during a dropped rod event was calculated to be [ ]^{a,c} during the SPU analysis. The Technical Specification FΔH limit is 1.70 (which corresponds to a RTDP FΔH limit of 1.635 and a best-estimate FΔH limit of 1.574 when appropriate uncertainty factors are applied). Since the Technical Specification FΔH limit would prevent a pre-drop FΔH value reaching [ ]^{a,c}, the minimum DNBR during the dropped RCCA event remains above the SAL DNBR.

In addition, the maximum calculated linear heat rate for the dropped rod event was determined to be [ ]^{a,c} kW/ft, which is less than the fuel centerline melt limit of [ ]^{a,c} kW/ft at SPU conditions. Therefore, the peak fuel centerline melt temperature criterion is confirmed to be met.

It should be noted that the calculated limiting pre-drop FΔH contains uncertainty factors which make it comparable to an RTDP FΔH limit. Therefore, since the calculated limiting pre-drop FΔH [ ]^{a,c} is greater than the RTDP FΔH limit (1.635), the RTDP FΔH limit would prevent a pre-drop FΔH value that would violate the SAL DNBR criteria during a dropped rod event.

Response NL-04-073-RSA-10d:

There were no explicit DNBR calculations performed for the static misaligned rod event. Instead, an allowable FΔH limit was calculated that would result in the safety analysis DNBR limit being reached, and this was then compared to actual calculated FΔH values corresponding to misaligned rod conditions. The allowable FΔH limit which would result in safety analysis limit DNBR being reached, was calculated to be 2.10. The maximum calculated FΔH for one RCCA fully withdrawn was [ ]^{a,c} (including uncertainty). The maximum calculated FΔH for one RCCA fully inserted was [ ]^{a,c} (including uncertainty). Since both values are less than the FΔH limit of 2.10, this demonstrates that the minimum DNBR for the static misaligned rod event is above the SAL DNBR.

Response NL-04-073-RSA-10e:

The maximum calculated linear heat rate for the dropped rod or RCCA misalignment transient is [ ]^{a,c} kW/ft. This is less than the fuel centerline melt limit of [ ]^{a,c} kW/ft, which was established during the SPU analysis. The [ ]^{a,c} kW/ft limit was developed using the NRC approved PAD

4.0 code (WCAP-15063-P-A), and will maintain the fuel centerline temperature below the UO_2 fuel melt limit (5080°F, decreasing by 58°F per 10,000 MWD/MTU, WCAP-12610-P-A).

Question NL-04-073-RSA-11:

Regarding the chemical volume control system malfunction re-analysis, define what the interim operating procedures are, and how they address dilution during hot and cold shutdown.

Response NL-04-073-RSA-11:

Boron Dilution Interim Operating Procedures are administrative procedures designed to address an inadvertent boron dilution in Modes 4 and 5 for plants that have received their SER prior to the issuance of Regulatory Guide 1.70 Revision 2 (previously the boron dilution analysis only addressed Modes 1, 2 and 6, i.e., IP3). The procedures have been generated in response to Westinghouse concerns regarding the change in regulatory guidance. Notification of this procedure was issued to the Nuclear Regulatory Commission and applicable Westinghouse plants (i.e. IP3) in Westinghouse letter NS-TMA-2273 (July 8, 1980).

The Boron Dilution Interim Operating Procedure addresses inadvertent boron dilution during plant shutdown (hot and cold, Modes 4 and 5, respectively). The operating procedure is based upon a generic boron dilution analysis assuming active RCS and RHR volumes which are conservative with respect to IP3. Additionally, the operating procedure accommodates mid-loop cold shutdown operations. The operating procedure is applicable for maximum dilution flowrates up to [ ]^{a,c} gal/min and minimum RHR flowrates of [ ]^{a,c} gal/min. In the event of a boron dilution accident during plant shutdown, use of the operating procedure provides the plant operator with sufficient information to maintain an appropriate boron concentration and will conservatively assure (at least) [ ]^{a,c} minutes will be available for operator action to terminate the dilution, prior to the reactor reaching a critical condition (hence, mitigating the consequences of the event).

Question NL-04-073-RSA-12:

Regarding the loss of normal feedwater (LONF) transient analysis:

c. In the analysis of record, the turbine driven auxiliary feedwater (TDAFW) pump is not credited to mitigate this transient. What is the consequence on the plant if the TDAFW pump is not aligned and there is less auxiliary feedwater (AFW) being fed to the system under the SPU? Provide the technical justification to show there is sufficient heat sink provided for the SPU condition. Also provide the justification to show 10 minutes is adequate time for the operator to align the TDAFW pump. Demonstrate the operators are capable of performing this action in 10 minutes and how plant procedures have been updated to address the operator action.

d. The licensee states with respect to DNB, the LONF transient is bounded by the loss of load transient. Provide the technical basis for this statement and provide the quantitative result demonstrating the DNBR limit remains above the SAL and is bounded by the loss of load transient in the RCCA drop/misoperation transient analysis.

Response NL-04-073-RSA-12a:

Refer to Attachment 2.

Response NL-04-073-RSA-12b:

a, c

[ ]

Question NL-04-073-RSA-13:

Regarding the loss of AC power (LOAC) to the station auxiliaries transient analysis:

c. The licensee states the TDAFW pump needs to be manually aligned before AFW can be delivered to the steam generators. How is this addressed in the plant procedures and what is the technical basis for the 10-minute completion time?

d. Provide the DNBR value which demonstrates the minimum DNBR remained above the SAL and the technical justification demonstrating the minimum DNBR for LOAC is bounded by the complete loss of flow transient.

Response NL-04-073-RSA-13a:

Refer to Attachment 2.

Response NL-04-073-RSA-13b:

a, c

[ ]

Question NL-04-073-RSA-14:

Regarding the excessive heat removal due to feedwater system malfunction re-analysis, the licensee states the case initiated at hot zero power (HZP) conditions with manual rod control was less limiting than the HZP steamline break analysis. Provide the technical basis for this statement.

Response NL-04-073-RSA-14:

It has been demonstrated that the DNB related statepoint parameters (i.e. pressure, heat flux fraction, flow, and inlet temperature) for the most limiting case of Feedwater Malfunction (FWM) event are less limiting than those for the most limiting case of HZP steamline break (SLB) event. The following table compares the key limiting parameters between the FWM event and the analyzed HZP SLB events. This table shows that the HZP SLB event results in a higher return to power level and significantly lower RCS pressures, which will cause a much larger DNBR penalty than the DNBR benefit gained due to a larger cooldown. Therefore, the FWM event is less limiting than the HZP SLB.

Key Parameter Comparisons between FWM and HZP SLB

Parameter	FWM	HZP SLB
Pressure (psia)		
Coldest Inlet Temp (°F)		
Hottest Inlet Temp (°F)		
Heat Flux Fraction		
Core Flow Fraction		

a.c

Question NL-04-073-RSA-15:

Regarding the excessive load increase incident, the analysis of record states the LOFTRAN computer code was used to analyze this transient. The application report does not describe how this incident was analyzed. State the methodology used to analyze this transient and provide the results obtained, including pressurizer pressure, nuclear power, DNB ratio and core average temperature over time which show the acceptance criteria is met.

Response NL-04-073-RSA-15:

The Excessive Load Increase Incident was evaluated using a simplified method developed to determine whether a reanalysis is required. This method applies conservatively bounding conditions in generating statepoints that are compared directly to the IP3 SPU core limits. If the minimum DNBR statepoint conditions remain above the SPU safety analysis DNBR limit, no further analysis is required. For the SPU, the IP3 initial (SPU) conditions when applying conservatively bounding conditions for the Excessive Load Increase Incident found that the corresponding minimum DNBR statepoint conditions were above the SPU safety analysis DNBR limit. A summary of the method follows.

Bounding initial conditions for plant parameters which impact DNBR conditions (i.e., power, temperature, pressure and flow) were determined for IP3 at SPU conditions consistent with

RTDP DNB methods employed for IP3. The initial conditions were the licensed uprate core power (3216 MWt), high nominal Tavg temperature (572°F), nominal RCS pressure (2250 psia) and minimum measured flow (364,700 gpm), consistent with the RTDP DNB methods.

Conservatively bounding deviations in plant parameters are applied to the IP3 initial conditions. The deviations are derived from a bounding set of plant analysis results with appropriate conservatisms applied. By applying these deviations to the IP3 initial conditions, a conservative set of statepoints are generated for each case examined. The following shows the deviations applied to the initial conditions that address various cases examined (note that a constant RCS flow rate is assumed).

Case	Feedback	Rod Control	Core Power	Vessel Average Temperature	Pressurizer Pressure
1	Minimum	Manual	[		]
2	Maximum	Manual			
3/4	Min and Max	Automatic			

a,c

The combined IP3 SPU initial conditions and bounding deviations (i.e. statepoints) were compared directly to the IP3 SPU limiting DNB core limit lines that represent the limiting DNBR conditions for the uprate. The comparison showed that margin exists between the bounding statepoint conditions and DNB core limits which demonstrates that the minimum DNBR conditions associated with an Excessive Load Increase Incident for IP3 at SPU conditions meet SPU safety analysis DNBR limit.

Question NL-04-073-SG-2:

With regard to mechanical plugs, the application report states on page 5.6-10 (Conclusions) that, "... both the long and short mechanical plug designs satisfy all applicable stress and retention acceptance criteria at the SPU condition with up to 10-percent tube plugging.", and that, "... mechanical plugs have been previously qualified for the SPU condition with up to 25-percent tube plugging." The licensee states on page 5.6-10 (Results) that, "The plug meets the Class 1 fatigue exemption requirements per N-415.1 of the ASME Code..."

a. Provide a table (similar to Table 5.6-2 for the primary and secondary side components) which summarizes the load conditions, stress categories, ASME allowables, and all applicable stress- and fatigue-related calculation results that support your conclusions for the mechanical plugs. Show the calculation results which indicate that ASME allowables were met.

b. Provide calculation results which show that the mechanical plugs are qualified for the SPU condition with up to 25% tube plugging.

c. Provide the basis and calculation results (if any) for satisfying the ASME Class 1 fatigue exemption requirements

Response NL-04-073-SG-2a:

The requested tables are provided as follows. The results show that the allowables were met.

Table NL-04-073-SG-2-1
Mechanical Plug Stress Summary

Condition	Stress Intensity Classification	Calculated Value	ASME Code Allowable
Design	P_m P_L+P_b		a,c Sm = 23.3 ksi 1.5Sm = 34.95 ksi
Faulted (Feedwater Line Break)	P_m P_L+P_b		0.7Su = 56.0 ksi 1.05 Su = 84.0 ksi
Test (Primary Side Hydrostatic)	P_m P_L+P_b		0.9Sy = 0.9x35.0 = 31.5 ksi 1.35Sy = 1.35x35.0 = 47.3 ksi

Note: Normal, and abnormal conditions are enveloped by design conditions. Maximum allowed delta-P across tubesheet is 1700 psi (Per Steam Generator Specification). Design case is based on applying a primary pressure of 2485 psi across tubesheet. The maximum ΔP across the tubesheet is [ ]^{a,c} psi for normal conditions, and [ ]^{a,c} psi for upset conditions. Also, the ASME Code limit for normal and upset condition is $3S_m$ = 3x23.3 = 69.9 ksi.

Table NL-04-073-SG-2-1

Mechanical Plug Retention

Condition	Dislodging Stress (psi)	Bearing Stress (psi)	Total (Dislodging plus bearing stress) (psi)	Allowable Unloading Stress (psi)
Primary Side Hydrostatic Test			a,c	[ ]+ac (With plug expander in place)
Secondary Side Hydrostatic Test				[ ]+ac (With plug expander in place)

Note: The hydrostatic tests bound all subsequent service conditions (normal, abnormal, test) for plug retention.

Response NL-04-073-SG-2b:

The statement "... mechanical plugs have been previously qualified for the SPU condition with up to 25-percent tube plugging..." does not apply to IP3.

Response NL-04-073-SG-2c:

The following table provides the basis and results for satisfying the ASME Class 1 fatigue exemption requirements.

Table NL-04-073-SG-2-3

Mechanical Plug Fatigue Evaluation based on Fatigue Exemption rules of ASME code Section N-474-1

N-474-1 Fatigue Condition	Description	Limits	Actual
1	Comparison of Transients with Atmospheric to Service Pressure Cycles	Allowable number of cycles for this condition is []a,c.	Actual number of cycles for this condition is []a,c.
2	Comparison of transients with significant pressure fluctuations	Allowable limiting pressure range for this condition is [ ]a,c psi	Maximum service pressure range was found to be [ ]a,c psi.
3	Temperature difference startup and shutdown	Allowable ΔT is 407°F between any two regions.	The startup and shutdown transient is limited to < 100°F/hr. Therefore, metal temperature between any two regions will be lower than the permitted limit.
4	Temperature difference normal service (Exclusive of startup and shutdown)	Allowable ΔT is 299.9°F.	Largest change in temperature was found for the Loss of Flow transient, which is 115°F.
5	Temperature difference dissimilar materials	The significant ΔT for temperature fluctuations was found to be 201.6°F.	
6	Non-pressure external mechanical loads.	There are no non-pressure external mechanical loads on the plugs.	

Question NL-04-073-SG-3 :

With regard to shop weld plugs, the licensee states on page 5.6-11 (Conclusions) that, "All primary stresses are satisfied for the weld between the weld plug and the tubesheet cladding.", and, "The overall maximum primary-plus-secondary stresses for the enveloping transient case of 'loss of load' were determined to be acceptable.", and, "It was determined that the fatigue exemption rules were met, and, therefore, fatigue conditions are acceptable."

a. Provide a table (similar to Table 5.6-2 for the primary and secondary side components) which summarizes the load conditions, stress categories, ASME Code allowables, and all applicable stress- and fatigue-related calculation results that support your conclusions for the shop weld plugs. Show the calculation results which indicate that ASME allowables were met.

b. Provide the basis and calculation results (if any) for satisfying the ASME fatigue exemption requirements.

Response NL-04-073-SG-3a:

The requested table is provided as follows.

Table NL-04-073-SG-3-1

Stress Summary for Shop Welded Plugs

Loading Condition	Calculated Maximum Stress Intensity (psi)	ASME Code Limit (psi)
Design	[ ] a,c	0.5Sm = 0.5x23,300 = 15,750 psi 0.5(1.5Sm) = 0.5x1.5x23,300 = 23,625 psi
Operating (Normal and Upset Conditions)		0.5(3.0Sm) = 0.5x3.0x23,300 = 34,950 psi
Test		0.5(0.9Sy) = 0.5x0.9x35,000 = 15,750 psi 0.5(1.35Sy) = 0.5x1.35x35,000 = 23,625 psi (3.0Sm) = 3.0x23,300 = 69,900 psi

Response NL-04-073-SG-3b:

The following table provides the basis and results for satisfying the ASME fatigue exemption requirements.

Table NL-04-073-SG-3-2

Shop Welded Plug Fatigue Evaluation based on Fatigue Exemption rules of ASME code Section N-474-1

N-474-1 Fatigue Condition	Description	Limits	Actual
1	Comparison of Transients with Atmospheric to Service Pressure Cycles	Allowable number of cycles for this condition is [ ]^{a,c}.	Actual number of cycles for this condition is [ ]^{a,c}.
2	Comparison of transients with significant pressure fluctuations	Allowable limiting pressure range for this condition is [ ]^{a,c} psi.	Maximum service pressure range was found to be [ ]^{a,c} psi.
3	Temperature difference startup and shutdown	Allowable ΔT is 413°F between any two regions.	The startup and shutdown transient is limited to < 100°F/hr. Therefore, metal temperature between any two regions will be lower than the permitted limit.
4	Temperature difference normal service (Exclusive of startup and shutdown)	Allowable ΔT is 276°F.	Largest change in temperature was found for the Loss of Flow transient, which is 115°F.
5	Temperature difference dissimilar materials	The significant ΔT for temperature fluctuations was found to be 575°F.	
6	Non-pressure external mechanical loads.	There are no non-pressure external mechanical loads on the plugs.	

Question NL-04-073-SG-4:

With regard to the tube undercut qualification, the licensee states on page 5.6-12 (Conclusions) that, "The results of the stress evaluation of the IP2 model 44F steam generators determined that the stresses are within ASME Code allowable values. Also, fatigue usage factors were determined to remain less than 1.0."

Provide a table (similar to Table 5.6-2 for the primary and secondary side components) which summarizes the load conditions, stress categories, ASME allowables, and all applicable stress-

and fatigue-related calculation results that support your conclusions for the tube undercut qualification. Show the calculation results which indicate that ASME allowables were met.

Response NL-04-073-SG-4:

Stress evaluation results of IP3 Model 44F series steam generator tube end machining are all found to be within allowable limits. Also, the fatigue usage values have been found to be less than the 1.0 fatigue limit. Summary results for the maximum normal design condition are provided in Table NL-04-073-SG-4-1, and results for fatigue are provided in Table NL-04-073-SG-4-2.

TABLE NL-04-073-SG-4-1
Indian Point Unit 3 Steam generators
Summary of Maximum Normal Design Stresses

Maximum Normal Operation Primary Pressure – Secondary Pressure = 1700 Psi												
Location	PM (Ksi)	ASME Allow Sm (Ksi) a,c	Ratio	PI+Pb (Ksi)	ASME Allow 1.5Sm (Ksi) a,c	Ratio	Triaxial Stress P1+P2+P3 (Ksi)	ASME Allow 4Sm (Ksi) a,c	Ratio	Max Shear (Bending) (Ksi)	ASME Allow 0.6Sm (Ksi) a,c	Ratio
Horizontal section between the end of tube and the weld		26.6			39.9			106.4			15.96	
Vertical section between the weld and cladding/ tubesheet		26.6			39.9			106.4			15.96	

a,c

Table NL-04-073-SG-4-2
Indian Point Unit 3 Steam Generators
Summary of Fatigue Usage Factors

Location	Surface	Usage Factor
Horizontal section between the end of tube and the weld	Inside (Weld Root)	[ ][a,c]
Vertical section between the weld and cladding/ tubesheet	Inside (Weld Root)	[ ][a,c]

Note: Maximum usage factor occurs at a point that is common to both sections.

Question NL-04-086-FDF-1:

In Section 7.1 of Attachment III (Application Report) to the January 29 letter, the licensee states the fuel assembly structural integrity is not affected and the core coolable geometry is maintained for the 15x15 Vantage+ fuel assembly design and the 15x15 upgraded fuel assembly for IP2 under SPU conditions.

Provide the technical basis that shows the upgraded fuel assembly's structural integrity and the core coolable geometry are maintained under the SPU conditions

Response NL-04-086-FDF-1:

Detailed site specific fuel assembly analyses for Indian Point Unit 3 have been performed at SPU conditions in accordance with approved methodologies. These methodologies were approved by NRC in WCAP 9401-P-A, WCAP-9500-A, WCAP-12610-P-A and WCAP-12488-P-A. Results from these analyses demonstrate that for the limiting loading condition (combined seismic and LOCA loading), the fuel assembly structural integrity is maintained and the grid impact loads and component stresses remain below the allowable limits. Therefore, the requirements to maintain a coolable core geometry are met. These analyses were performed for homogenous cores of 15 x 15 upgrade fuel and transition cores with both 15 x 15 upgrade fuel and 15 x 15 VANTAGE + fuel (current resident fuel). The transition core analyses were performed considering various fuel assembly loading combinations to determine the limiting conditions. The transition core loading pattern that is limiting for the upgrade fuel occurs when the upgrade fuel is located at [ ]^{a,c} and the VANTAGE+ fuel is located at [ ]^{a,c}. The transition core loading pattern that is limiting for the VANTAGE + fuel occurs when the VANTAGE+ fuel is located at [ ]^{a,c} and the upgrade fuel is located at [ ]^{a,c}. In both limiting cases, significant margins remain for both the upgrade fuel assemblies and the VANTAGE + fuel assemblies considering combined seismic and LOCA loading.

The maximum calculated load for the combined seismic and LOCA loads was compared to the maximum load which can be applied before plastic deformation occurs in the subject grid (called the allowable limit in the analysis). In all cases the postulated load was well below the allowable limit, the closest ratio of combined seismic and LOCA loading to limit load is [ ]^{a,c} and occurs in [ ]^{a,c} fuel. This means that the strength of the [ ]^{a,c} is [ ]^{a,c} the maximum loading it is expected to experience for the combined seismic and LOCA loading. The minimum ratio (greatest margin) is [ ]^{a,c} and occurs in [ ]^{a,c}. All other grid margins are between these values. For thimble tubes and fuel rods, the range of values is narrower but the minimum margin is greater - there is no case for which the strength of the thimble tubes and fuel rods is not at least [ ]^{a,c} the calculated loading for the combined seismic and LOCA loading condition. Because all of the fuel assembly components will experience loading below their strength limit, the fuel assembly geometry is maintained for this limiting loading combination and the coolable geometry conclusions of the LOCA ECCS analyses are not affected.

Question NL-04-086-FDF-2:

Regarding the fuel core design description of analyses and evaluations in Section 7.3.3, it states that conceptual models were developed that followed the uprate transition to an equilibrium

cycle and that the SPU evaluation assumed a core thermal power level of 3216 MWt during the three transition cycles.

State whether the core is being treated as a mixed core during the transition cycles. Also, explain how fuel damage was analyzed in a seismic event for the mixed core as it transitions to a homogeneous 15x15 upgraded fuel loading and describe the worst case scenario analyzed. In addition, provide the technical justification that shows structural integrity at the SPU condition for the mixed core is maintained in a loss-of-coolant accident (LOCA) coincident with a seismic event at IP2.

Response NL-04-086-FDF-2:

The use of the 15 x 15 upgrade fuel assembly design is virtually transparent for the core analysis of the transition cycles. For neutronic applications, the only change resulting from the upgrade fuel design is a small change in grid mass. Since the grids are composed of ZIRLO™ material with a low neutron absorption cross section, small changes in grid mass will have no noticeable effect on the core models.

The fuel assembly transition is important in the core thermal hydraulic design. In order to account for the small differences in pressure drop and flow characteristics between the current and upgrade fuel assembly designs, a transition core DNBR penalty was established by Westinghouse. For the two transition cycles leading to a full core of the upgrade fuel assembly design, the largest transition core DNBR penalty was determined to be [ ]^{a,c}. Sufficient DNB margin is available to account for the DNBR transition core penalties, and there was no need to reduce peaking factor limits to aid in the fuel management of the transition cores.

The licensing basis for fuel structural integrity requires that the loading conditions address seismic loading, LOCA loading, and the combination of LOCA and seismic loading as required by the NRC. The seismic analysis of the reactor pressure vessel system was performed for the SPU conditions, including the generation of the core plate seismic motions that were used in the IP3 analysis of 15 x 15 VANTAGE + fuel and 15 x 15 upgrade fuel. The LOCA analysis of the reactor pressure vessel system was performed for the SPU conditions, including the generation of the core plate motions that were used in the IP3 analysis of 15 x 15 VANTAGE + fuel and 15 x15 upgrade fuel. These analyses are discussed in Attachment III of the IP3 SPU LAR, Section 5.2.4 of WCAP-16212-P. The LOCA analysis used LOCA hydraulic forcing functions calculated using the MULTIFLEX computer code (See LAR Attachment III Section 6.7 of WCAP-16212-P) and crediting Leak-Before-Break (LBB) for the reactor coolant loop piping. Section 5.4.2 of WCAP-16212-P evaluates the continued applicability of LBB for the IP3 SPU conditions and concludes that LBB still applies. Accordingly, the LOCA hydraulic forcing functions used for the fuel analyses are based on postulated breaks of the largest branch lines attached to the RCS. The specific analyses performed for the fuel assembly structural considerations are described in the response to RAI #1 above. The approval of the methodology is discussed in RAI # 5. As noted in the response to RAI # 1, the mixed core configuration resulted in the limiting loads for all loading conditions and had significant margin.

Question NL-04-086-FDF-3:

In Section 7.1 of the Application Report, the licensee states the level of fuel rod fretting, oxidation and hydriding of thimbles and grids, fuel rod growth gap, and guide thimble wear was acceptable.

Provide a reference to the document which provides the analytical results, and list the numerical values for these parameters along with their acceptable limit for the SPU conditions. Also, explain how the analysis performed for IP2 SPU conditions met the applicable regulatory criteria and indicate whether the methodology used has been previously approved by the staff.

Response NL-04-086-FDF-3:

This RAI discusses several issues as they apply to fuel rods and to fuel assembly structures. All design criteria have been shown to be met and are documented in proprietary calculation notes that can be made available for audit.

A series of hydraulic tests were performed by Westinghouse to confirm fuel assembly vibratory and fretting design performance. Based on these tests, the 15 x 15 upgrade design shows a significant performance improvement compared to the 15 x 15 VANTAGE + design. (See Letter LTR-NRC-04-8 for additional discussion of the evaluations of the 15 x 15 upgrade design changes. These evaluations used NRC-approved methods referenced in WCAP-12488-P-A.)

The fuel assembly structure formerly had a hydriding pickup limit of [ ]^{a,c}. This hydride pickup limit was recently replaced as indicated in the review and approval by the NRC of WCAP-12488-A, Addendum 1-A, January 2002. The upper bound value as specified in the topical addendum is [ ]^{a,c} Maximum grid strap and thimble thinning at IP3 is calculated at SPU conditions to be [ ]^{a,c} thus the 15 x 15 upgrade assembly meets this design criterion.

The Westinghouse criteria for fuel rods are [ ]^{a,c} for clad hydriding and [ ]^{a,c} for clad oxide steady state interface temperature. All design criteria have been shown to be met and are documented in proprietary calculation notes that are available for audit. These criteria were approved by NRC in WCAP-12610-P-A, which is applicable to the ZIRLO cladding used on the 15x15 upgrade design.

The space between the fuel rod end plugs and the fuel assembly nozzles needs to be sufficient to prevent interference of these members. All aspects of the 15 x 15 upgrade design that affect this requirement are identical to the 15 x 15 VANTAGE + design features currently in the core and have already been shown to be acceptable. These criteria were approved by NRC in WCAP-12610-P-A, which is applicable to the ZIRLO cladding used on the 15x15 upgrade design.

The W design bases and criteria for guide thimble wear are that no localized perforation of the tube wall should occur and that the integrity of the guide thimble tube should be maintained throughout the normal life of a fuel assembly. These criteria were approved by NRC in WCAP-12610-P-A, which is applicable to the ZIRLO guide thimble tube used on the 15x15 upgrade design. Since the tube wall thickness has not changed and the material strengths (yield and ultimate) do not differ significantly between the Zircaloy and ZIRLO™ alloys, a negligible change would be expected in the guide thimble wear performance for the SPU.

Question NL-04-086-FDF-4:

In Section 7.1 of the Application Report, the licensee states that analyses verified the fuel assembly holddown spring's capability to maintain contact between the fuel assembly and the lower core plate at normal operating conditions for the SPU.

Describe the analyses performed to justify this statement. Additionally, provide the numerical values that show the design criteria are met.

Response NL-04-086-FDF-4:

The fuel assembly holddown spring analysis was performed on the 15 x 15 upgrade assembly using the same standard holddown spring methodology approved in WCAP-12488. The analysis that was completed evaluates the net holddown force on the fuel assembly throughout its design lifetime taking into account fuel assembly growth and spring relaxation on a cycle-by-cycle basis. The analysis accounts for the opposing forces that act on each fuel assembly due to assembly weight, buoyancy, spring forces, and lift force. The analysis assures that there is a positive net fuel assembly holddown force on the bottom core plate at all times except during a pump over-speed at hot conditions. During a postulated pump over-speed event, the assembly holddown force acceptance criterion allows assemblies to lift off the lower core plate but not enough to plastically deform the holddown spring during the event. This criterion is satisfied for the 15 x 15 upgrade fuel design.

The holddown spring for the 15 x 15 upgrade design satisfies all of the standard fuel assembly holddown spring requirements and provides [ ]^{a,c} holddown during normal operation.

ATTACHMENT 6 TO NL-04-145

ERRATA PAGES FOR WCAP-16212-NP

INDIAN POINT NUCLEAR GENERATING UNIT 3
STRETCH POWER UPRATE NSSS AND BOP LICENSING REPORT

Refer to Entergy letter NL-04-069, dated June 3, 2004

ENTERGY NUCLEAR OPERATIONS, INC.
INDIAN POINT NUCLEAR GENERATING UNIT NO. 3
DOCKET NO. 50-286

Errata List for IP3 SPU License Amendment Request
(WCAP-16212-NP, transmitted by Entergy letter NL-04-069, dated June 3, 2004)

Section	Page	Location of Revision	Revision
4.2	4.2-9	Subsection 4.2.4, last paragraph	Revise value for CST useable volume to 292,200 gallons (twice)
4.2	4.2-11	Subsection 4.2.6 under "Auxiliary Feedwater System"	Revise value for CST useable volume to 292,200 gallons (twice)
4.3	4.3-5	Subsection 4.3.1.3.3, first paragraph	Revise full-power T_{avg} values to 565°F
4.3	4.3-6	First paragraph on page	Revise T_{avg} value to 565°F
4.3	4.3-6	Subsection 4.3.1.4.3, first paragraph	Revise pressurizer pressure to 2335 psia (2320 psig)
4.3	4.3-7	Subsection 4.3.1.5.3, first paragraph	Revise minimum T_{avg} to 546°F and minimum steam pressure to 617 psia
4.3	4.3-8	First paragraph on page	Revise level dropped to 18.9-percent, and minimum steam pressure reached to 630 psia
4.3	4.3-9	Subsection 4.3.1.6.3, first paragraph after bulleted list	Delete the word "both" prior to "35-percent power," and revise peak-pressurizer pressures to 2330 and 2290 psia
4.3	4.3-10	Second paragraph on page	Revise full-power T_{avg} values to 565°F
4.3	4.3-12	First paragraph after bulleted list	Revise peak pressurizer pressure to 2335 psia
4.3	4.3-13	First paragraph after bulleted list	Revise high-pressurizer pressure reactor trip setpoint to 2380 psia
9.4	9.4-6	Subsection 9.4.5, fifth paragraph, first sentence	To clarify cross reference section, change text to read: "...(see Section 10.8 for EQ discussion)."
9.4	9.4-7	Subsection 9.4.6 under "Component and Piping Design Pressures and Temperatures"	To correct typographical error, change "...design temperature (10°F) by 12°F." to read "...design temperature (100°F) by 12°F."
9.4	9.4-10	Subsection 9.4.7, Reference 2	To remain consistent with the text in subsection 9.4.5, fifth paragraph, first sentence, change Reference 2 to read: 10CFR50.49, *Environmental Qualification of Electric Power Plants*, 66FR64738, January 24, 1983.
9.12	9.12-6	Subsection 9.12.6, second sentence	Revise value for CST useable volume to 292,200 gallons

Section	Page	Location of Revision	Revision
10.8	10-23	Subsection 10.8.3.2 under "MSLBs in Steam and Feedline Penetration Area"	To clarify cross reference information, change text to read: "The spectrum of MSLBs has been evaluated in subsection 6.6.4 for both summer and winter conditions at 70-percent and 102-percent SPU power levels. The break isolation time has been evaluated for 600 and 900 seconds. The peak temperature for the MSLB under winter conditions is 481°F resulting from a 1.2-square-foot break (header section of main steam). The peak area temperature of 484°F results from a 1.4-square-foot break in summer conditions (also from a header break). Equipment in the break area that is required to respond to these breaks has been evaluated using thermal lag analysis. The thermal lag of the equipment results in equipment temperatures that are less than the equipment qualification test temperatures."

- The steam generators are filled back up to 52-percent narrow range water level.

- The CST operating fluid temperature is at the maximum allowable value (120°F).

The analysis concluded that a minimum required useable inventory of 292,200 gallons is required to meet the plant licensing bases for the range of NSSS design parameters approved for SPU. As discussed in Section 9.12, the CST *Technical Specification* requirement of 360,000 gallons ensures a usable volume of 292,200 gallons to meet the limiting design basis requirement.

4.2.5 Steam Generator Blowdown System

The Steam Generator Blowdown System (SGBS) is used to control the chemical composition of the steam generator secondary side water within the specified limits. The SGBS also controls the buildup of solids in the steam generator secondary side.

The blowdown flow rates required during plant operation are based on chemistry control and tube-sheet sweep requirements to control the buildup of solids. The blowdown flow rate required to control chemistry and the buildup of solids in the steam generators is based on allowable condenser in-leakage, total dissolved solids in the plant circulating water, and the allowable primary to secondary leakage. Since these variables are not affected by the SPU, the blowdown required to control secondary chemistry and steam generator solids will not be affected by the SPU.

The inlet pressure to the SGBS varies with steam generator operating pressure. Therefore, as steam generator full-load operating pressure decreases, the inlet pressure to the SGBS control valves decreases and the valves must open to maintain the required blowdown flow rate into the system flash tank. The 1.4-percent MUR NSSS design parameters (Table 2.1-1) evaluate a maximum decrease in steam pressure from no-load to full-load of 258 psi (that is, from 1020 to 762 psia). Based on the revised range of SPU NSSS design parameters, the no-load steam pressure (1020 psia) remains the same, and the minimum full-load steam pressure (567 psia) decreases about 26 percent. As noted in the footnote to Table 2.1-2, steam pressure will be limited to 650 psia during actual operation. This decrease in blowdown system inlet pressure is evaluated in Section 9.5 of this report.

Condensate and Feedwater System

The hydraulic evaluation of the C&FS for the range of design parameters approved for the SPU indicates the lift of the FRVs at full power will increase by as much as 11.3 percent (from 80 to 91.3 percent at T_{avg} of 572°F) with the present Feedwater Pump Speed Control Program. See Section 9.4 of this document for a discussion of the hydraulic evaluation of the C&FS for a large load rejection.

Auxiliary Feedwater System

The AFWS is capable of delivering the minimum flow requirements for the SPU (see Section 6 of this report).

The CST minimum useable inventory of 292,200 gallons is required to meet the plant licensing bases for the range of NSSS design parameters approved for SPU. The current *Technical Specification* value of 360,000 gallons ensures a usable volume of 292,200 gallons.

Steam Generator Blowdown System

The blowdown flow required to control secondary chemistry and steam generator solids is not affected by the SPU.

4.2.7 References

1. *Indian Point Nuclear Generating Unit No.3 1.4-Percent Measurement Uncertainty Recapture Power Uprate License Amendment Request Package*, Entergy Nuclear Operations, Inc., May 2002.

2. *ASME Boiler and Pressure Vessel Code*, Section III, "Rules for Construction of Nuclear Vessels," 1965 Edition with Winter 1965 Addenda, The American Society of Mechanical Engineers, New York, NY.

3. *Indian Point Nuclear Generating Unit No. 3, Updated Final Safety Analysis Report*, Rev. 18, Docket No. 50-286.

4.3.1.3.2 Acceptance Criteria

The 50-percent load rejection from full power should provide adequate margins to the nominal trip setpoints (see subsection 4.3.1.2). The plant response should be stable and non-oscillatory. There should be adequate pressurizer PORV capacity to prevent the transient from reaching the high-pressurizer pressure reactor trip setpoint.

4.3.1.3.3 Results

The initial analyses were performed for the low T_{avg} range of operation as noted in subsection 4.3.1.2. While the results showed margin was needed for the overtemperature ΔT (OTΔT) trip setpoint (limiting protection system function), at the lower limiting T_{avg} of 550.6°F, as the full-power T_{avg} is increased to the range expected for future SPU operations, larger load rejections can be successfully handled without resulting in a reactor trip. The analyses results indicated that, for full-power T_{avg} values of 565°F and above, the 50-percent design basis load rejection could be accommodated. Therefore, for the full-power T_{avg} value of 567°F at which the plant will operate with the SPU implementation, a 50-percent load rejection can be accommodated.

As the full-power T_{avg} value is increased, the load rejection transient becomes less limiting. This is due to a combination of reasons:

- Higher values of T_{avg} result in more of an initial temperature error to the steam dump control logic, thereby increasing the initial steam dump opening.
- Higher values of T_{avg} result in higher steam pressures, thereby increasing the steam dump flow for a given steam dump valve position.
- Higher values of T_{avg} result in a more negative value of the fuel MTC, thereby producing greater fuel reactivity effects to mitigate the transient.

The control system response was smooth during the transient with no oscillatory response noted. All parameters responded smoothly with no sustained or divergent oscillations.

The peak-pressurizer pressure was controlled by the pressurizer power-operated relief valve (PORV) actuation, thereby preventing the pressurizer pressure from reaching the high-pressurizer pressure reactor trip setpoint and showing acceptable capacity for the pressurizer PORVs. The peak steam pressure was no higher than the no-load steam pressure, so the steam generator atmospheric relief valves (ARVs) were not challenged.

In summary, the 50-percent load rejection transient can be successfully accommodated when the T_{avg} is 565°F or higher.

4.3.1.4 Ten-Percent Step-Load Decrease from Full-Power Transient

4.3.1.4.1 Description of Analysis and Evaluations

A 10-percent step-load decrease from full-power transient was analyzed using the IP3 model of the LOFTRAN code (Reference 1). Since the 10-percent step-load decrease transient is loop-symmetric, a single-loop version of the LOFTRAN code was used. This computer code is a system-level program code and models the overall NSSS, including the detailed modeling of the control and protection systems.

The 10-percent step-load decrease was initiated from 100-percent power. Secondary side steam pressure and temperature initially increased, lagged by an increase in the primary side average temperature (T_{avg}) and RCS pressure. The power mismatch between the turbine load and nuclear power, and the resultant temperature error between the T_{avg} and reference temperature (T_{ref}) caused the rods to move into the core, reducing core power. Reactor coolant temperature and pressure were then restored to their equilibrium values.

This transient should not result in the pressurizer pressure reaching the pressurizer PORV actuation setpoint. Stability of the Rod Control System was also assessed.

4.3.1.4.2 Acceptance Criteria

During the 10-percent step-load decrease transient, the PORV actuation setpoint should not be challenged. Therefore, the maximum pressure reached during this transient should be below the PORV actuation setpoint of 2350 psia (2335 psig).

4.3.1.4.3 Results

This transient is the same one that was used to verify acceptability of the pressurizer spray capacity in subsection 4.3.2 in this report. The analyses performed for the spray capacity included additional conservatisms not normally used in the plant operability analyses (that is, T_{avg} uncertainty of 7.5°F), and therefore bracketed the best-estimate analyses normally used in the plant operability analyses. The results indicated that no reactor trip setpoints were challenged and the control system response was stable and non-oscillatory. Pressurizer pressure reached a maximum of 2335 psia (2320 psig) for the high T_{avg} case and the PORVs were not challenged. Therefore, the plant response for the 10-percent step-load decrease transient is acceptable for the SPU.

4.3.1.5 Ten-Percent Step-Load Increase from 90-Percent Power Transient

4.3.1.5.1 Description of Analysis and Evaluations

A 10-percent step-load increase from 90-percent power transient was analyzed using the IP3 model of the LOFTRAN code (Reference 1). Since the 10-percent step-load increase transient is loop-symmetric, a single-loop version of the LOFTRAN code was used. This computer code is a system-level program code and models the overall NSSS, including the detailed modeling of the control and protection systems.

The 10-percent step-load increase was initiated from 90-percent power. Secondary steam pressure and temperature decreased initially, followed by a decrease in the primary side T_{avg} and pressurizer pressure. Pressurizer heaters are actuated to restore system pressure. The power mismatch between the turbine load and nuclear power, and the resultant temperature error between T_{avg} and T_{ref} would cause the rods to move out of the core, increasing core power until the final 100-percent power condition is reached.

Since the 10-percent step-load increase transient will result in the lowest steam pressure of any of the operational transients, it is analyzed in order to demonstrate that ESF actuation will not occur on low steam pressure.

4.3.1.5.2 Acceptance Criteria

The 10-percent step-load increase was analyzed to demonstrate that ESF actuation would not occur due to the plant cooldown. The critical function is the ESF actuation on high steamline flow coincident with low steamline pressure (616 psig or 631 psia) or low T_{avg} (542°F). While the transient will not actuate the high steamline flow trip setpoint at 100-percent power, partial actuation of the other functions could occur. Analyses were performed at the lower range of T_{avg} since this operating condition has the lowest margin to the low steamline pressure or low T_{avg} setpoints. The limiting case is for the minimum full-power steam pressure of 650 psia, the 0-percent SGTP conditions that resulted in a minimum full-power T_{avg} of 550.6°F.

4.3.1.5.3 Results

The results for the limiting case, in which the full-power T_{avg} is 550.6°F with a minimum full-power steam pressure of 650 psia and 0-percent SGTP conditions, indicated that the plant would experience a plant cooldown. The minimum T_{avg} was 546°F, which is just above the low T_{avg} setpoint of 542°F portion of the high-steamline flow ESF function. The minimum steam pressure was 617 psia, below the low-steam pressure setpoint of 631 psia portion of the high steamline flow ESF function. The RCS cooldown was enough to potentially result in shutoff of

the pressurizer heaters since the level dropped to 18.9-percent, just above the low-level heater cutoff setpoint of 18-percent of span. The 10-percent step-load increase transient was also performed at a full-power T_{avg} of 567°F, which resulted in a RCS cooldown but there was greater margin to the various functions except the low-steamline pressure portion of the high steamline flow ESF function. For this case, the minimum steam pressure reached was 630 psia, which is just below the low-steamline pressure setpoint of 631 psia; however, the Engineered Safety Feature Actuation System (ESFAS) actuations are partial actuations that require a high-steamline flow measurement, which will not be reached during this transient. Also, for this case, the pressurizer level drops due to the cooldown but remains above the low-level heater cutoff setpoint of 18-percent of span.

4.3.1.6 Turbine Trip without Reactor Trip from P-8 Setpoint or Below

4.3.1.6.1 Description of Analysis and Evaluations

A turbine trip without reactor trip transient from the P-8 setpoint or below was analyzed using the IP3 model of the LOFTRAN code (Reference 1). Since the turbine trip transient is loop-symmetric, a single-loop version of the LOFTRAN code was used. This computer code is a system-level program code and models the overall NSSS, including the detailed modeling of the control and protection systems.

The turbine and reactor trip logic was coupled with the P-8 permissive. If a turbine trip occurs from a power level above the P-8 permissive, the turbine trip would actuate a reactor trip. If a turbine trip occurs from a power level at or below the P-8 permissive, no immediate reactor trip would occur. The nominal analysis value for the P-8 setpoint was 35-percent power, but analyses were also performed below the P-8 setpoint, at 20-percent power. Therefore, a turbine trip without reactor trip transient (that is, turbine trip from power level at or below the P-8 setpoint) can be considered as being a load rejection, and the 50-percent load rejection analyses described in subsection 4.3.1.3 of this report would cover this transient. However, another acceptability requirement of this transient is that the pressurizer PORVs are not actuated. This requirement is the limiting requirement for transient acceptability.

4.3.1.6.2 Acceptance Criteria

The turbine trip without reactor trip transient from the P-8 setpoint or lower power level should provide adequate margins to the nominal trip setpoints (see subsection 4.3.1.2). The plant response should be stable and non-oscillatory. The pressurizer PORVs should not be actuated during this transient. While not a requirement, it is desirable that the steam generator ARVs are not challenged during this transient.

4.3.1.6.3 Results

The following assumptions were made besides those described in subsection 4.3.1.2.

- The Rod Control System was assumed to be in manual; no credit was taken for rod motion.

- The analyses were performed for both the 0-percent SGTP (full-power T_{avg} = 550.6°F) and 10-percent SGTP (full-power T_{avg} = 563.7°F) cases for the minimum acceptable full-power steam pressure of 650 psia. Normally, the higher SGTP case is limiting, but the lower SGTP case would have the lower (T_{avg} - $T_{no\ load}$) signal to the steam dump valves and, therefore, the greater amount of plant heatup (and resulting higher pressurizer insurge and peak pressurizer pressure). Analyses for these low extremes of full-power T_{avg} would bound the results for higher values of T_{avg}.

The turbine trip without reactor trip analyses from 35-percent power (that is, the P-8 setpoint) showed unacceptable results (that is, there was not adequate margin to the PORV actuation setpoint) for the 0-percent STGP case; however, the analyses from 20-percent power showed acceptable results. For the 10-percent SGTP case, the turbine trip without reactor trip analyses showed acceptable results from 35-percent power and 20-percent power, where the peak-pressurizer pressures were 2330 and 2290 psia, respectively.

The above analyses were performed at the lower limiting T_{avg} values for plant operation at the minimum acceptable full-power steam pressure of 650 psia. As the full-power T_{avg} (and consequentially the full-power steam pressure) was raised above this lower limit, the peak-pressurizer pressure was reduced. Therefore, a turbine trip without reactor trip transient is acceptable with the P-8 setpoint set to 20-percent power for T_{avg} values of 550.6°F and above, or with the P-8 setpoint set to 35-percent power for T_{avg} values of 564°F and above. A P-8 setpoint of 35-percent power is acceptable for the full-power T_{avg} value of 567°F, at which the plant will operate for the SPU implementation.

4.3.1.7 Conclusions of the Control Systems Operability Analyses

The control systems operability analyses were performed for the entire full-power T_{avg} window (see subsection 4.3.1.2); however, the plant will operate at a full power T_{avg} of 567°F following the SPU implementation. The following was concluded from the plant operability analyses performed for this expected 567°F operating point:

The 10-percent step-load decrease transient can be accommodated successfully without challenging the pressurizer PORVs for the full-power T_{avg} window.

The 10-percent step-load increase transient can be accommodated successfully without challenging any reactor trip setpoints for full-power T_{avg} values of 564°F and above. The low-steamline pressure portion of the high steamline flow ESF actuation could be actuated while performing this transient with a full-power T_{avg} of 564°F or higher; however, the ESFs actuations are partial actuations that require a high steamline flow coincident measurement, which will not be reached during this transient.

The 50-percent load rejection can be successfully accommodated for full-power T_{avg} values of 565°F and above.

The turbine-trip-without-reactor trip from a power level corresponding to the P-8 setpoint or lower can be successfully accommodated with the P-8 setpoint set to 35-percent power for full-power T_{avg} values of 564°F and above.

The control systems are stable and support the SPU for all normal condition transients; no long-term, continuous, or diverging plant parameter oscillations were noted during any of the operational transients.

4.3.2 Pressurizer Pressure Control System Component Sizing

The various NSSS pressure control components are intended to maintain the pressurizer pressure at the nominal setpoint during steady-state operation, and to control the pressure excursions that occur during design basis transients to an extent that a reactor trip, ESFAS actuation, or a pressurizer safety valve actuation would not occur. This assessment shows that the installed capacity of the various pressure control components remains acceptable for the SPU conditions.

The following pressure control components were evaluated:

- Pressurizer heaters
- Pressurizer spray valves
- Pressurizer PORVs

4.3.2.1 Pressurizer Heaters

The pressurizer heaters are sized to be able to heat up the pressurizer liquid at a 200°F/hr rate during the initial plant heatup phase from cold shutdown. In addition, they are intended to assist the plant in controlling the pressurizer pressure decrease that would occur during design basis transients that result in pressurizer outsurge events. These include the initial part of a 10-percent step-load increase transient, a 5-percent-per-minute-plant-unloading transient, or

- Credit is taken for automatic operation of all normally functioning NSSS control systems (reactor control, pressurizer pressure and level control, and feedwater control; steam dump is not credited for a 10-percent step-load transient).

- The installed spray capacity analyzed is 325 gpm/valve for a total of 650 gpm.

The limiting case is for the plant operating at the upper limit T_{avg} of 572°F. For this case, the peak pressurizer pressure was 2335 psia, which is below the pressurizer PORV setpoint of 2350 psia. Therefore, the installed pressurizer spray capacity meets the acceptance criterion at the SPU conditions.

4.3.2.3 Pressurizer PORVs

The design basis for the pressurizer PORV capacity is to be able to handle a 50-percent load decrease transient without resulting in the pressure increasing to the high-pressurizer pressure reactor trip setpoint. The limiting case is a 50-percent load decrease from 100- to 50-percent power at 200 percent per minute.

The pressurizer PORV sizing analysis was performed at the IP3 SPU operating conditions defined in Section 2.1. The analysis was intended to bracket the window of operating conditions, a full-power T_{avg} of 549° to 572°F, and 0- to 10-percent SGTP levels. However, at the lower end of the T_{avg} window (that is, 549°F), the corresponding full-power steam pressure of 591 psia (Table 2.1-2) would violate the minimum acceptable full-power steam pressure of 650 psia that is required to avoid violating the primary-to-secondary pressure differential of 1700 psid. Thus, this PORV sizing analysis brackets the following window of operating conditions, with full-power T_{avg} ranging from 550.6° to 572°F, and 0- to 10-percent SGTP levels.

With the SPU NSSS power of 3230-MWt, the demand on the pressurizer PORVs would tend to increase. Therefore, the pressurizer PORV sizing was analyzed to ensure acceptability. The analysis included the following assumptions:

- The plant is initially at 102 percent (100-percent nominal power with 2-percent uncertainty) of the 3216-MWt SPU power level.

- The plant is initially at nominal T_{avg} + 7.5°F uncertainty.

- The transient is a load decrease from the noted 102-percent turbine load to 50-percent load at 200-percent per minute.

- The initial pressurizer pressure is at nominal pressure of 2250 psia.

- The initial pressurizer water level is at nominal values.

- The steam generator heat transfer coefficient increases to the maximum credible value (0-percent fouling, 0-percent SGTP).

- The fuel reactivities are at conservative BOL conditions.

- Credit is taken for automatic operation of all NSSS control systems (reactor control, pressurizer pressure and level control, feedwater control, and steam dump control).

- The installed PORV capacity analyzed is 179,000 lb/hr per PORV.

The limiting case for this sizing analysis occurs for the plant operating at the upper limit T_{avg} of 572°F. For this case, the pressurizer PORVs had sufficient capacity to avoid the pressurizer pressure from rising to the implemented high-pressurizer pressure reactor trip setpoint of 2380 psia.

The 50-percent step-load decrease was modeled as a 50-percent load rejection at a maximum turbine-unloading rate of 200-percent/minute. With this modeling, the pressurizer PORV capacity was sufficient to avoid a reactor trip on high-pressurizer pressure.

4.3.2.4 Conclusions

Based on this review, the existing pressurizer pressure control component sizing (pressurizer heaters, spray, and PORVs) meets the acceptance criterion at the SPU conditions.

4.3.3 Overpressure Protection System

As a result of the IP3 SPU, the plant operating parameters have changed from the present licensed parameters. The affected parameters are shown in Table 2.1-2. These are at-power parameters. However, the Overpressure Protection System (OPS) only comes into operation during zero-power operation during plant heatup, cooldown, or any operation between cold shutdown and hot standby.

The OPS setpoints would only be required to be evaluated and potentially revised for reasons such as:

- Changes in the design basis transients for which the OPS provides protection (that is, changes in the design basis mass input or heat input transients). There are no changes in the design basis transients.

the intent of the newer criteria. SPU operation does not affect the ability of the C&FS to meet these requirements. Therefore, the C&FS continues to meet the criterion requirements.

In addition to AEC Criterion 2 (*Performance Standards*), New York Power Authority (NYPA) committed to the requirements of Sections III.G, III.J, III.L, and III.O of 10CFR50, Appendix R (Reference 1). Evaluation of IP3 fire protection features against the requirements of Section III.G of Appendix R to 10CFR50 was completed and the report submitted to NRC on August 16, 1984. SPU operation does not affect the ability of the C&FS to meet these requirements. Therefore, the C&FS continues to meet the criterion requirements.

Environmental qualification (EQ) of C&FS electrical equipment important to safety is demonstrated in EQ packages compiled in accordance with the requirements of 10CFR50.49 (Reference 2) and Division of Operating Reactors (DOR) Guidelines (see Section 10.8 for EQ discussion). Monitoring of the C&FS is provided as a result of the Three Mile Island 2 (TMI-2) accident investigation and the requirements of Regulatory Guide (RG) 1.97 (Reference 3). The C&FS is designed with provisions to allow post-accident sampling in accordance with the post-TMI requirements of NUREGs 0578 and 0737 (References 4 and 5). The Technical Specification requirements for sampling provisions were deleted by Amendment 210, dated February 6, 2002. SPU operation does not affect the ability of the C&FS to meet these requirements. Therefore, the C&FS continues to meet the criterion requirements.

Criterion as it relates to the accident analyses and NSSS/BOP interface can be found in Sections 4 and 5 of this document.

Other criteria required to meet SPU conditions are listed in subsection 9.4.4, of this section.

9.4.6 Results and Conclusions

Specific results of each evaluation are discussed in the following paragraphs.

Hydraulic Analysis of Condensate, Feedwater, and Associated Heater Drain Pump System

The feedwater/condensate/associated heater drain pump system is capable of providing the required heat balance flow rate and pressure to steam generators at 100-percent SPU power level and transient conditions with sufficient margin in control valve open position and feedwater pump turbine speed.

The analysis also confirmed that the CBPs, condensate, feedwater, and heater drain pumps will have sufficient NPSHA with margin over NPSHR in all modes of system operation.

The analysis also confirmed that the feedwater pump suction header pressures are higher than the pump speed runback set pressures with sufficient margin.

Component and Piping Design Pressures and Temperatures

The maximum sustained operating pressures and temperatures for piping at SPU conditions are enveloped by the existing piping design pressures and temperatures, except for the maximum normal sustained operating temperatures for the condensate pump suction piping and DCT outlet piping to condenser (112°F @ 3.0 inch HgA condenser pressure) exceeds design temperature (100°F) by 12°F. The maximum sustained operating temperature for these piping will be 89°F @ 1.5 inch HgA condenser pressure and 77°F @ 1.0 inch HgA condenser pressure respectively. The IP3 operating test data indicates that condensate pressure varies from 1.0 inch HgA to 2.50 inch HgA at current conditions. The maximum sustained operating temperature for these piping will be 104°F @ 2.50 inch HgA condenser pressure. The C&FS has been evaluated based on 3.00 inch HgA condenser pressure heat balance for conservatism and additional margin. The materials of this piping are A155, grade C55, Class 2 for pipe 30-inch-to-54-inch, A53, grade B for 3-inch-to-24-inch and A106, grade B for 2-1/2 inch and smaller. The pipe walls of condensate pumps suction piping from condenser and DCT outlet piping to condenser are acceptable at SPU since the stress value of carbon steel piping material remains unchanged in the temperature range of -20° to 650°F and the existing pipe walls/schedules will remain unchanged based on maximum normal sustained SPU temperature (112°F) and design pressure (30 psig). Also, the rated temperature of the valves and flanges in this piping (that is, −20 to 150°F) bounds the maximum normal sustained temperature (that is, 112°F).

The maximum sustained operating pressures and temperatures at SPU conditions are enveloped by the rated/design pressures and temperatures of valves, flanges, FWH tubes, and pump casings.

Velocity and FAC of Condensate, Feedwater, and Heater Drain Pump Piping

The majority of the piping experiences velocities below the standard industry pipe velocity guideline. The temperature criterion for FAC susceptibility is greater than 200°F. All the piping from feedwater heaters 31A/B/C outlet to steam generators with temperatures exceeding 165°F are presently in the FAC Program. The limited number of pipes with velocities above the applicable guideline are considered susceptible to FAC and are presently in the FAC Program.

NRC Generic Letter 89-10 MOV Program – MOV Program Review

The design inputs in the calculations such as condensate pump shutoff head, maximum MFP discharge pressure/minimum MFP suction pressure/minimum MFP speed of MFP speed control system, steam generator pressure at which AFW pump starts, MFP coast down head, condenser high water level set point etc., for maximum design basis opening and closing differential pressures and line pressures of MOVs are not affected by the SPU conditions.

Condenser Hotwell Volume

The condenser hotwell volume of 114,000 gallons provides for more than 5 minutes of storage at SPU that exceeds the 4 minutes requirement to accept full-condensate flow at SPU conditions. Hence, the condenser hotwell will contain free volume for condensate surge protection and to accommodate system surges during load rejection.

Condensate Polishing System

The CPS operates during plant startup and infrequently during normal power operation to maintain the required purity of the condensate for the steam generators. The system is designed for a continuous operation at maximum flow of 24,000 gpm with inlet maximum pressure of 700 psig and temperature of 140°F. The 140°F temperature is based on precluding thermal degradation of the resin. The maximum allowable flow/pressure/temperature of CPS design envelopes the SPU flow/pressure/temperature of 20,328 gpm, 496 psig and 112°F through CPS.

9.4.7 References

1. 10CFR50, Appendix R, *Fire Protection Program for Nuclear Power Facilities Operating Prior to January 1979,* June 20, 2000.

2. 10CFR50.49, *Environmental Qualification of Electric Equipment Important to Safety for Nuclear Power Plants*, 66FR64738, January 24, 1983.

3. NRC Regulatory Guide 1.97, *Instrumentation of Light-Water-Cooled Nuclear Power Plants to Assess Plant and Environs Conditions During and Following an Accident* (Errata published July 1981) (Draft RS 917-4, Proposed Revision 2, published December 1979) (Rev. 3, ML003740282).

4. NUREG-0578, *TMI Lessons Learned Task Force Status Report and Short Term Recommendations*, July 1979.

5. NUREG-0737, *Clarification of TMI Action Plan Requirements*, November 1980.

Accident analyses acceptance criteria are provided in each subsection in Section 6 for those accidents for which AFW is credited for mitigation. Interface guidelines for the Nuclear Steam Supply Systems (NSSS) and balance-of-plant (BOP) interface are discussed in Section 4.2.

Acceptance criteria required to meet SPU conditions are listed in the subsection 9.12.4.

9.12.6 Results and Conclusions

Since the required CST inventory is a function of plant-rated power and other NSSS design parameters, a new analysis was performed to determine the required inventory for the range of NSSS design parameters approved for the SPU. The analysis concluded that a minimum required useable inventory of 292,200 gallons is required to meet the plant licensing bases for the range of NSSS design parameters approved for the SPU. Thus, considering the unavailable volume and other margins, the design basis requirement remains satisfied by the existing *Technical Specification* CST volume of 360,000 gallons. The volume of water contained in the IP3 CST is adequate to support the SPU (see Sections 4.2 and 10.6).

The AFW pumps can draw from an alternative supply of water to provide for long-term cooling. This alternate supply is from city water storage tank. This alternative supply is manually aligned to the AFW pumps in the event of unavailability of the CST.

The worst single failure modeled in the SPU LONF and LOAC analyses is the loss of one of the two MDAFWPs. This results in the availability of only one MDAFWP automatically supplying a minimum total AFW flow of 343 gpm, distributed equally between two of the four steam generators. Additional flow from a second MDAFWP or the TDAFWP is assumed to be available only following operator action to start a second MDAWFP or align the TDAFWP discharge valves. This operator action is assumed to provide an additional 343 gpm of AFW flow distributed equally to the other two steam generators not receiving AFW automatically, and is assumed to occur at 10 minutes after the reactor trip due to a low-low steam generator water level signal (see subsections 6.3.7 and 6.3.8).

The SPU ATWS analysis assumes normal conditions consistent with the requirements outlined by the NRC. In consideration of the low probability of an ATWS, the NRC permitted normal initial conditions, normal system parameters and the availability of all system functions except reactor trip to be assumed. The SPU ATWS analysis conservatively assumes AFW flow of 343 gpm per pump from two MDAFWPs and no credit for the TDAFWP. The RCS pressure service level C limit of 3215 psia is not exceeded at SPU conditions.

MSLBs in Steam and Feedline Penetration Area

The spectrum of MSLBs has been evaluated in subsection 6.6.4 for both summer and winter conditions at 70- and 102-percent SPU power levels. The break isolation time has been evaluated for 600 and 900 seconds. The peak temperature for the MSLB under winter conditions is 481°F resulting from a 1.2-square-foot break (header section of main steam). The peak area temperature of 484°F results from a 1.4-square-foot break in summer conditions (also from a header break).

Equipment in the break area that is required to respond to these breaks has been evaluated using thermal lag analysis. The thermal lag of the equipment results in equipment temperatures that are less than the equipment qualification test temperatures.

10.8.3.3 Radiation

The SPU effect on radiation outside containment has been evaluated. The beta radiation dose to EQ equipment outside containment is negligible. The radiation sources are inside process equipment and piping. In the event of a LOCA inside containment, the highly radioactive water is recirculated within process equipment and piping in the Primary Auxiliary Building and pipe tunnel. This water has a slightly higher radiation dose than before the SPU, but the effect on EQ is acceptable.

10.8.3.4 Humidity

The SPU does not change the normal operational humidity or the accident humidity outside containment.

10.8.3.5 Flooding

Flooding outside the containment is addressed in Section 10.4 of this document.

ENCLOSURE A TO NL-04-145

Westinghouse authorization letter dated November 17, 2004 (CAW-04-1923, Rev. 1), with the accompanying affidavit, Proprietary Information Notice, and Copyright Notice

ENTERGY NUCLEAR OPERATIONS, INC.
INDIAN POINT NUCLEAR GENERATING UNIT NO. 3
DOCKET NO. 50-286

Westinghouse

Westinghouse Electric Company
Nuclear Services
P.O. Box 355
Pittsburgh, Pennsylvania 15230-0355
USA

Direct tel: (412) 374-4643
Direct fax: (412) 374-4011
e-mail: greshaja@westinghouse.com

U.S. Nuclear Regulatory Commission
Document Control Desk
Washington, DC 20555-0001

Our ref: CAW-04-1923 Rev. 1

November 17, 2004

APPLICATION FOR WITHHOLDING PROPRIETARY
INFORMATION FROM PUBLIC DISCLOSURE

Subject: Westinghouse Transmittal PU3-W-04-153 (INT-04-203), Indian Point Nuclear Generating Unit No. 3 Stretch Power Uprate Project, Westinghouse Responses to RAIs, November 16, 2004.

The proprietary information for which withholding is being requested in the above-referenced report is further identified in Affidavit CAW-04-1923 signed by the owner of the proprietary information, Westinghouse Electric Company LLC. The affidavit, which accompanies this letter, sets forth the basis on which the information may be withheld from public disclosure by the Commission and addresses with specificity the considerations listed in paragraph (b)(4) of 10 CFR Section 2.390 of the Commission's regulations.

Accordingly, this letter authorizes the utilization of the accompanying affidavit by Entergy Nuclear Operations.

Correspondence with respect to the proprietary aspects of the application for withholding or the Westinghouse affidavit should reference this letter, CAW-04-1923, and should be addressed to J. A. Gresham, Manager, Regulatory Compliance and Plant Licensing, Westinghouse Electric Company LLC, P.O. Box 355, Pittsburgh, Pennsylvania 15230-0355.

Very truly yours,

J. A. Gresham, Manager
Regulatory Compliance and Plant Licensing

Enclosures

cc: W. Macon
E. Peyton

CAW-04-1923

AFFIDAVIT

COMMONWEALTH OF PENNSYLVANIA:

ss

COUNTY OF ALLEGHENY:

Before me, the undersigned authority, personally appeared J. A. Gresham, who, being by me duly sworn according to law, deposes and says that he is authorized to execute this Affidavit on behalf of Westinghouse Electric Company LLC (Westinghouse), and that the averments of fact set forth in this Affidavit are true and correct to the best of his knowledge, information, and belief:

J. S. Galembush, Acting Manager
Regulatory Compliance and Plant Licensing

Sworn to and subscribed
before me this 16th day
of November, 2004

Sharon L Fiori
Notary Public

Notarial Seal
Sharon L. Fiori, Notary Public
Monroeville Boro, Allegheny County
My Commission Expires January 29, 2007
Member, Pennsylvania Association Of Notaries

(1) I am an Acting Manager, Regulatory Compliance and Plant Licensing, in Nuclear Services, Westinghouse Electric Company LLC (Westinghouse), and as such, I have been specifically delegated the function of reviewing the proprietary information sought to be withheld from public disclosure in connection with nuclear power plant licensing and rule making proceedings, and am authorized to apply for its withholding on behalf of Westinghouse.

(2) I am making this Affidavit in conformance with the provisions of 10 CFR Section 2.390 of the Commission's regulations and in conjunction with the Westinghouse "Application for Withholding" accompanying this Affidavit.

(3) I have personal knowledge of the criteria and procedures utilized by Westinghouse in designating information as a trade secret, privileged or as confidential commercial or financial information.

(4) Pursuant to the provisions of paragraph (b)(4) of Section 2.390 of the Commission's regulations, the following is furnished for consideration by the Commission in determining whether the information sought to be withheld from public disclosure should be withheld.

(i) The information sought to be withheld from public disclosure is owned and has been held in confidence by Westinghouse.

(ii) The information is of a type customarily held in confidence by Westinghouse and not customarily disclosed to the public. Westinghouse has a rational basis for determining the types of information customarily held in confidence by it and, in that connection, utilizes a system to determine when and whether to hold certain types of information in confidence. The application of that system and the substance of that system constitutes Westinghouse policy and provides the rational basis required.

Under that system, information is held in confidence if it falls in one or more of several types, the release of which might result in the loss of an existing or potential competitive advantage, as follows:

(a) The information reveals the distinguishing aspects of a process (or component, structure, tool, method, etc.) where prevention of its use by any of Westinghouse's competitors without license from Westinghouse constitutes a competitive economic advantage over other companies.

(b) It consists of supporting data, including test data, relative to a process (or component, structure, tool, method, etc.), the application of which data secures a competitive economic advantage, e.g., by optimization or improved marketability.

(c) Its use by a competitor would reduce his expenditure of resources or improve his competitive position in the design, manufacture, shipment, installation, assurance of quality, or licensing a similar product.

(d) It reveals cost or price information, production capacities, budget levels, or commercial strategies of Westinghouse, its customers or suppliers.

(e) It reveals aspects of past, present, or future Westinghouse or customer funded development plans and programs of potential commercial value to Westinghouse.

(f) It contains patentable ideas, for which patent protection may be desirable.

There are sound policy reasons behind the Westinghouse system which include the following:

(a) The use of such information by Westinghouse gives Westinghouse a competitive advantage over its competitors. It is, therefore, withheld from disclosure to protect the Westinghouse competitive position.

(b) It is information that is marketable in many ways. The extent to which such information is available to competitors diminishes the Westinghouse ability to sell products and services involving the use of the information.

(c) Use by our competitor would put Westinghouse at a competitive disadvantage by reducing his expenditure of resources at our expense.

(d) Each component of proprietary information pertinent to a particular competitive advantage is potentially as valuable as the total competitive advantage. If competitors acquire components of proprietary information, any one component may be the key to the entire puzzle, thereby depriving Westinghouse of a competitive advantage.

(e) Unrestricted disclosure would jeopardize the position of prominence of Westinghouse in the world market, and thereby give a market advantage to the competition of those countries.

(f) The Westinghouse capacity to invest corporate assets in research and development depends upon the success in obtaining and maintaining a competitive advantage.

(iii) The information is being transmitted to the Commission in confidence and, under the provisions of 10 CFR Section 2.390, it is to be received in confidence by the Commission.

(iv) The information sought to be protected is not available in public sources or available information has not been previously employed in the same original manner or method to the best of our knowledge and belief.

(v) The proprietary information sought to be withheld in this submittal is that which is appropriately marked in Attachment A to PU3-W-04-153, "Indian Point Nuclear Generating Unit No. 3 Stretch Power Uprate Westinghouse Responses to RAIs" (Proprietary) dated November 16, 2004, being transmitted by the Entergy Nuclear Northeast letter and Application for Withholding Proprietary Information from Public Disclosure, to the Document Control Desk. The proprietary information as submitted for use by Westinghouse for the Indian Point Nuclear Generating Unit No. 3 is expected to be applicable for other licensee submittals

in response to certain NRC requirements for justification of Stretch Power Uprate License Amendment Request.

This information is part of that which will enable Westinghouse to:

(a) Provide information in support of plant power uprate licensing submittals.

(b) Provide plant specific calculations.

(c) Provide licensing documentation support for customer submittals.

Further this information has substantial commercial value as follows:

(a) Westinghouse plans to sell the use of similar information to its customers for purposes of meeting NRC requirements for licensing documentation associated with power uprate licensing submittals.

(b) Westinghouse can sell support and defense of the technology to its customers in the licensing process.

(c) The information requested to be withheld reveals the distinguishing aspects of a methodology which was developed by Westinghouse.

Public disclosure of this proprietary information is likely to cause substantial harm to the competitive position of Westinghouse because it would enhance the ability of competitors to provide similar calculations, evaluations, analyses and licensing defense services for commercial power reactors without commensurate expenses. Also, public disclosure of the information would enable others to use the information to meet NRC requirements for licensing documentation without purchasing the right to use the information.

The development of the technology described in part by the information is the result of applying the results of many years of experience in an intensive Westinghouse effort and the expenditure of a considerable sum of money.

In order for competitors of Westinghouse to duplicate this information, similar technical programs would have to be performed and a significant manpower effort, having the requisite talent and experience, would have to be expended.

Further the deponent sayeth not.

PROPRIETARY INFORMATION NOTICE

Transmitted herewith are proprietary and/or non-proprietary versions of documents furnished to the NRC in connection with requests for generic and/or plant-specific review and approval.

In order to conform to the requirements of 10 CFR 2.390 of the Commission's regulations concerning the protection of proprietary information so submitted to the NRC, the information which is proprietary in the proprietary versions is contained within brackets, and where the proprietary information has been deleted in the non-proprietary versions, only the brackets remain (the information that was contained within the brackets in the proprietary versions having been deleted). The justification for claiming the information so designated as proprietary is indicated in both versions by means of lower case letters (a) through (f) located as a superscript immediately following the brackets enclosing each item of information being identified as proprietary or in the margin opposite such information. These lower case letters refer to the types of information Westinghouse customarily holds in confidence identified in Sections (4)(ii)(a) through (4)(ii)(f) of the affidavit accompanying this transmittal pursuant to 10 CFR 2.390(b)(1).

COPYRIGHT NOTICE