NUREG/CR-6595, Rev. 1
BNL-NUREG-52539, Rev. 1

An Approach for Estimating the Frequencies of Various Containment Failure Modes and Bypass Events

Final Report

Brookhaven National Laboratory

U.S. Nuclear Regulatory Commission
Office of Nuclear Regulatory Research
Washington, DC 20555-0001

AVAILABILITY OF REFERENCE MATERIALS IN NRC PUBLICATIONS

NRC Reference Material

As of November 1999, you may electronically access NUREG-series publications and other NRC records at NRC's Public Electronic Reading Room at http://www.nrc.gov/reading-rm.html. Publicly released records include, to name a few, NUREG-series publications; *Federal Register* notices; applicant, licensee, and vendor documents and correspondence; NRC correspondence and internal memoranda; bulletins and information notices; inspection and investigative reports; licensee event reports; and Commission papers and their attachments.

NRC publications in the NUREG series, NRC regulations, and *Title 10, Energy*, in the Code of *Federal Regulations* may also be purchased from one of these two sources.

1. The Superintendent of Documents
   U.S. Government Printing Office
   Mail Stop SSOP
   Washington, DC 20402–0001
   Internet: bookstore.gpo.gov
   Telephone: 202-512-1800
   Fax: 202-512-2250
2. The National Technical Information Service
   Springfield, VA 22161–0002
   www.ntis.gov
   1–800–553–6847 or, locally, 703–605–6000

A single copy of each NRC draft report for comment is available free, to the extent of supply, upon written request as follows:

Address: Office of the Chief Information Officer,
Reproduction and Distribution
Services Section
U.S. Nuclear Regulatory Commission
Washington, DC 20555-0001
E-mail: DISTRIBUTION@nrc.gov
Facsimile: 301–415–2289

Some publications in the NUREG series that are posted at NRC's Web site address http://www.nrc.gov/reading-rm/doc-collections/nuregs are updated periodically and may differ from the last printed version. Although references to material found on a Web site bear the date the material was accessed, the material available on the date cited may subsequently be removed from the site.

Non-NRC Reference Material

Documents available from public and special technical libraries include all open literature items, such as books, journal articles, and transactions, *Federal Register* notices, Federal and State legislation, and congressional reports. Such documents as theses, dissertations, foreign reports and translations, and non-NRC conference proceedings may be purchased from their sponsoring organization.

Copies of industry codes and standards used in a substantive manner in the NRC regulatory process are maintained at—

The NRC Technical Library
Two White Flint North
11545 Rockville Pike
Rockville, MD 20852–2738

These standards are available in the library for reference use by the public. Codes and standards are usually copyrighted and may be purchased from the originating organization or, if they are American National Standards, from—

American National Standards Institute
11 West 42nd Street
New York, NY 10036–8002
www.ansi.org
212–642–4900

Legally binding regulatory requirements are stated only in laws; NRC regulations; licenses, including technical specifications; or orders, not in NUREG-series publications. The views expressed in contractor-prepared publications in this series are not necessarily those of the NRC.

The NUREG series comprises (1) technical and administrative reports and books prepared by the staff (NUREG–XXXX) or agency contractors (NUREG/CR–XXXX), (2) proceedings of conferences (NUREG/CP–XXXX), (3) reports resulting from international agreements (NUREG/IA–XXXX), (4) brochures (NUREG/BR–XXXX), and (5) compilations of legal decisions and orders of the Commission and Atomic and Safety Licensing Boards and of Directors' decisions under Section 2.206 of NRC's regulations (NUREG–0750).

DISCLAIMER: This report was prepared as an account of work sponsored by an agency of the U.S. Government. Neither the U.S. Government nor any agency thereof, nor any employee, makes any warranty, expressed or implied, or assumes any legal liability or responsibility for any third party's use, or the results of such use, of any information, apparatus, product, or process disclosed in this publication, or represents that its use by such third party would not infringe privately owned rights.

NUREG/CR-6595, Rev. 1
BNL-NUREG-52539, Rev. 1

An Approach for Estimating the Frequencies of Various Containment Failure Modes and Bypass Events

Final Report

Manuscript Completed: September 2004
Date Published: October 2004

Prepared by
W. T. Pratt, V. Mubayi, T.L. Chu,
G. Martinez-Guridi, J. Lehner

Brookhaven National Laboratory
Energy Science and Technology Department
Upton, NY 11973-5000

D.M. O'Neal, NRC Project Manager

Prepared for
Division of Risk Analysis and Applications
Office of Nuclear Regulatory Research
U.S. Nuclear Regulatory Commission
Washington, DC 20555-0001
NRC Job Code Y6103

ABSTRACT

This report is Revision 1 of NUREG/CR-6595, "An Approach for Estimating the Frequencies of Various Containment Failure Modes and Bypass Events," which the U.S. Nuclear Regulatory Commission (NRC) published in January 1999. The focus of the report is to provide a simplified approach for using a probabilistic risk assessment to estimate the frequency of containment failure and bypass events that result in radioactive releases to the environment with the potential for causing early fatalities. The approach uses the large, early release frequency (LERF) as a measure of the risk of early fatality.

This revision of NUREG/CR-6595 updates the guidance for full-power operation and provides additional guidance for estimating LERF under low power and shutdown conditions. The NRC staff issued a draft of this report for comment in August, 2003, and has appropriately addressed comments received in preparing the final report. The full power analyses in this revision reflect information gained from recent containment studies and the individual plant examination studies. The guidance provided in this revision is intended to encompass the likelihood of containment failure for most nuclear power plants.

CONTENTS

Page

ABSTRACT iii
LIST OF FIGURES vi
LIST OF TABLES vii
EXECUTIVE SUMMARY ix
FOREWORD xiii
ACKNOWLEDGMENTS xv
NOMENCLATURE xvii

1. INTRODUCTION 1-1
   1.1 Background 1-1
   1.2 Objective 1-1
   1.3 Approach 1-2
   1.4 Scope and Limitations 1-3
   1.5 Organization of Report 1-4
   1.6 References 1-4

2. SIMPLIFIED EVENT TREES FOR PWRs 2-1
   2.1 PWR Large Volume Containment 2-1
   2.2 PWR Ice Condenser Containment 2-7
   2.3 PWR Late Containment Failure 2-10
   2.4 References 2-12

3. SIMPLIFIED EVENT TREES FOR BWRs 3-1
   3.1 BWR Mark I Containment 3-1
   3.2 BWR Mark II Containment 3-6
   3.3 BWR Mark III Containment 3-9
   3.4 BWR Late Containment Failure 3-11
   3.5 References 3-13

4. SIMPLIFIED EVENT TREES DURING SHUTDOWN 4-1
   4.1 Simplified Containment Event Trees for PWRs 4-1
      4.1.1 PWR Large Dry and Sub-atmospheric Containment Shutdown Event Tree 4-1
      4.1.2 PWR Ice Condenser Containment Shutdown Event Tree 4-6
   4.2 Simplified Containment Event Trees for BWRs 4-7
      4.2.1 BWR Mark I and II Containment Shutdown Event Tree 4-8
      4.2.2 BWR Mark III Containment Shutdown Event Tree 4-10
   4.3 References 4-12

APPENDIX A. DEFINITION AND POTENTIAL SPECIFICATION OF LERF A-1

APPENDIX B. CASE STUDIES B-1

APPENDIX C. CASE STUDIES BASED ON SHUTDOWN PRAs C-1

LIST OF FIGURES

		Page
2.1	PWR Large Dry Containments	2-1
2.2	PWR Ice Condenser Containments	2-8
2.3	Late Containment Failure for PWRs	2-10
3.1	BWR Mark I Containments	3-2
3.2	BWR Mark II Containments	3-7
3.3	BWR Mark III Containments	3-10
3.4	Late Containment Failure for BWRs	3-12
4.1	POS and Time Windows for PWRs at Shutdown	4-2
4.2	PWR Large Dry and Sub-Atmospheric Containment Event Tree	4-2
4.3	PWR Ice Condenser Containment Event Tree	4-6
4.4	POS and Time Windows for BWRs at Shutdown	4-8
4.5	BWR Mark I and II Containment Event Trees	4-9
4.6	BWR Mark III Containment Event Tree	4-11

LIST OF TABLES

Page

3-1 Mark I Conditional Probabilities of Containment Failure at Vessel Breach 3-5

3-2 Mark II Conditional Containment Failure Probabilities 3-8

3-3 Mark III Conditional Containment Failure Probabilities 3-11

EXECUTIVE SUMMARY

NUREG/CR-6595, "An Approach for Estimating the Frequencies of Various Containment Failure Modes and Bypass Events," was published in January 1999. Since that time, Draft Regulatory Guide DG-1061 has been replaced by Regulatory Guide (RG) 1.174 which references NUREG/CR-6595 as an approach for estimating LERF. NUREG/CR-6595 was revised and published as a draft-for-comment revision of this report in August 2003. The draft report contains: (1) some new severe accident information in Chapter 2 and Chapter 3 and (2) a new Chapter 4 on a simplified approach to shutdown risk. This final report incorporates comments received.

Background

The U.S. Nuclear Regulatory Commission (NRC) Policy Statement [1] related to Probabilistic Risk Analysis (PRA) encourages greater use of PRA techniques to improve safety decisionmaking and enhance regulatory efficiency. One activity in response to this policy statement is the use of PRA in support of decisions related to modifying a plant's current licensing basis (CLB). Draft Regulatory Guide DG-1061 [2], which was published for public comment, includes staff guidance for using risk information from plant-specific PRA study findings and insights. The guide also recommends risk metrics, such as core damage frequency (CDF) and Large Early Release Frequency (LERF), for use in making risk-informed regulatory decisions and also establishes acceptance guidelines. In cases where only a Level-1 PRA of a plant is available, Appendix B of Draft DG-1061 provides a simplified approach for estimating LERF, and changes in LERF resulting from changes to a plant's CLB. The approach uses simplified event trees to process information obtained from a Level-1 PRA into an estimate of the frequency of a large and early release.

Subsequent to publishing DG-1061, the simplified approach was applied [3, 4] to nine plants with different containment types. The applications utilize information from the Level-1 PRAs documented in the Individual Plant Examination (IPE) submittals for the plants. The objective of these case studies is to determine if the simplified approach in DG-1061 provides a reasonably accurate estimate of LERF, identify needed modifications to the approach, extend the scope of Draft DG-1061 guidance to include external events and modes of operation other than full power, identify improvements in the documentation, and document the lessons learned from the applications.

The recommendations of the case studies as well as the public comments received on Draft DG-1061were incorporated into NUREG/CR-6595 published in January 1999. Since that time, Draft Regulatory Guide DG-1061 has been replaced by Regulatory Guide 1.174 [5] which references NUREG/CR-6595 as an approach for estimating LERF. In August 2003, NUREG/CR6595 was revised and published for comment, i.e., a draft version of this report, to incorporate updated information on direct containment heating and information gathered from the Individual Plant Examination Level-2 studies, and add a separate chapter for shutdown conditions.

This final report incorporates the comments received from the public on the draft report. In addition to improved guidance, more important changes were made to the guidance on shutdown conditions and pressurized water reactor (PWR) late containment failure event tree. Additional case studies based on shutdown PRAs were also performed and summarized in Appendix C.

Approach

This report describes a simplified approach designed to supplement Level-1 PRAs submitted in support of risk-informed decisionmaking. The intent is to use accident sequence information provided in the Level-1 PRA to estimate the frequencies of various containment failure modes. In order to allow comparison with the acceptance guidelines identified in Regulatory Guide 1.174, the approach has to distinguish between containment failure modes that might lead to early fatalities versus those failure modes that will not cause early fatalities. Consequently, the failure modes were categorized as follows:

- Early containment failure or bypass (potentially leading to large early release, i.e., early fatalities likely)

- Late containment failure or containment intact (potentially not leading to large early release, i.e., early fatalities unlikely)

- Late containment failure with potential for early fatalities due to impeded evacuation by seismic events and high winds (For the purpose of estimating LERF, this category is considered a contributor to LERF.)

Once established, the frequencies of these categories can be determined and changes in the frequencies due to changes in a plant's CLB compared against the acceptance guidelines. Five simplified CETs have been developed to process the Level-1 results of full power operation and allocate the output into one of the above categories. In order to consider the category with late containment failure and potential for early fatalities, a late containment failure event tree was developed for each of the PWR and BWR types, with transfers from those sequences without early containment failure. The following five types of plants are represented by these CETs:

- Pressurized water reactors (PWRs) with a large volume containment
- PWRs with an ice condenser containment
- Boiling water reactors (BWRs) with a Mark I containment
- BWRs with a Mark II containment
- BWRs with a Mark III containment

Each accident sequence is allocated to a risk category based on the status of the plant. The intent is that the split fractions for most of the questions in the trees will be determined from plant-specific accident sequences and plant characteristics. The CETs include recommended split fractions for questions related to the likelihood of early containment failure. These split fractions reflect reasonable estimates of the likelihood of early containment failure for the five containment types given various plant conditions. However, as the split fractions are intended to encompass the likelihood of containment failure for most of the plants within a particular containment type they are somewhat bounding in nature. Consequently, an alternative split fraction (less bounding) could be used for a particular plant provided sufficient justification is given.

For accidents during shutdown, three plant operational states (POSs) were defined based on the configuration of the plant and further divided into time windows based whether they take place before or after refueling operation. These POSs are defined by general characteristics. Similar to full power operation, simplified CETs were developed for each of the five types of plants, with the Mark I and Mark II plants having the same CET structure and slightly different guidance on split fractions. The late containment failure event trees for power operation are also used for shutdown conditions. The CETs are applicable to all POSs during shutdown.

Application

The advantage of this approach is that it allows LERF to be calculated very quickly, though approximately, without the need for performing a detailed Level-2 PRA. The intent is to use this approach to initially estimate LERF. If the estimated LERF is significantly below (about an order of magnitude or more) the acceptance guideline established in RG 1.174 [5], then further analysis is not necessary. However, if the LERF estimated from this simplified approach is close to or larger than the acceptance guideline, further analysis may be necessary.

References

1. USNRC, "Use of Probabilistic Risk Assessment Methods in Nuclear Regulatory Activities; Final Policy Statement," Federal Register: Volume 60, Number 158, August 16, 1995.

2. USNRC, "An Approach for Using Probabilistic Risk Assessment in Risk-Informed Decisions on Plant-Specific Changes to the Current Licensing Basis," Draft Regulatory Guide DG-1061, June 1997.

3. Chu, T-L., Azarm, M.A., "An Evaluation of the Simplified Event Trees Described in Appendix B of Draft Regulatory Guide (DG-1061)," BNL Technical Report, JCN W-6234, July 1998.

4. Chu, T-L., Azarm, M.A., "Extension of Scope of the Simplified Event Trees Described in Appendix B of Draft Regulatory Guide (DG-1061)," BNL Technical Report, JCN W-6234, July 1998.

5. Regulatory Guide 1.174, "An Approach for Using Probabilistic Risk Assessment in Risk-Informed Decisions on Plant-Specific Changes to the Licensing Basis" Revision 1, November 2002.

FOREWORD

NUREG/CR-6595, Revision 1, "An Approach for Estimating the Frequencies of Various Containment Failure Modes and Bypass Events," was prepared by Brookhaven National Laboratory under contract to the U.S. Nuclear Regulatory Commission (NRC). The focus of this report is to provide a simplified approach for use in estimating the frequency of containment failure and bypass events that result in radioactive releases to the environment with the potential to cause early fatalities. This approach uses the large, early release frequency (LERF) as a measure of the risk of early fatality. LERF is a risk measure considered in the NRC's Regulatory Guide (RG) 1.174, "An Approach for Using Probabilistic Risk Assessment in Risk-Informed Decisions on Plant-Specific Changes to the Licensing Basis," Revision 1, dated November 2002. RG 1.174 references NUREG/CR-6595 as providing a simplified approach for use in estimating LERF using a probabilistic risk assessment.

This revision of NUREG/CR-6595 updates and expands upon the simplified approach presented in the original report, which was published in January 1999 and mainly related to full-power operation. Risk analysts can use this revision as guidance for estimating LERF in support of risk-informed applications, consistent with RG 1.174 principles. This revision updates the full-power guidance with information from recent containment studies and the individual plant examination studies, and it provides additional guidance for low power and shutdown operation. The guidance is intended to encompass the likelihood of containment failure for most nuclear power plants. However, the simplified approach provided in this revision is somewhat bounding and should only be used as a first-step scoping study in estimating LERF. Less-bounding probabilities may be used for a particular plant given that sufficient justification is provided.

ACKNOWLEDGMENTS

The authors wish to acknowledge discussions on the original version of this report with Dr. R. Youngblood, Dr. J. Lehner, and Dr. A. Camp on the development of the event trees presented in this report. In addition, Dr. T-L. Chu and Dr. M.A. Azarm applied the original event trees to nine plants and provided valuable comments on the guidance and event tree structure.

J. Guttmann and B. Hardin of the NRC staff were heavily involved with the original version of this report and their support is greatly appreciated.

The authors wish to acknowledge D. Storan and J. Frejka for their excellence in the preparation of this document and also thank C. Conrad for preparing the figures.

The latest revision of this report has benefitted greatly from discussions with the NRC monitor, Dan O'Neal, who also performed supporting MACCS calculations.

NOMENCLATURE

APB	Accident Progression Bin
APET	Accident Progression Event Tree
ATWS	Anticipated Transient Without Scram
AWE	Atomic Weapons Establishment
BNL	Brookhaven National Laboratory
BWR	Boiling Water Reactor
BWROG	BWR Owners Group
CCI	Core-Concrete Interaction
CD	Core Damage
CDF	Core Damage Frequency
CET	Containment Event Tree
CFM	Containment Failure Mode
CHR	Containment Heat Removal
CLB	Current Licensing Basis
CP	Conditional Probability
CRD	Control Rod Drive
DCH	Direct Containment Heating
EAL	Emergency Action Level
ECCS	Emergency Core Cooling System
EPG	Emergency Procedures Guide
HPME	High Pressure Melt Ejection
IPE	Individual Plant Examination
IPEEE	Individual Plant Examination for External Events
ISGTR	Induced steam generator tube rupture
ISLOCA	Interfacing system loss of coolant accident
LERF	Large Early Release Frequency
LOCA	Loss-of-Coolant Accident
MSIV	Main Steam Isolation Valve
MTC	Moderator Temperature Coefficient
NRC	U.S. Nuclear Regulatory Commission
PCA	Probabilistic Consequence Assessment
PDS	Plant Damage State
PORV	Power Operated Relief Valve
PRA	Probabilistic Risk Assessment/Analysis
PSA	Probabilistic Safety Assessment/Analysis
PWR	Pressurized Water Reactor
QHO	Quantitative Health Objective

NOMENCLATURE (Cont'd)

RCP	Reactor Coolant Pump
RCS	Reactor Coolant System
RHR	Residual Heat Removal
RPV	Reactor Pressure Vessel
SBO	Station Blackout
SGTR	Steam Generator Tube Rupture
SRV	Safety Relief Valve
TW	Time Window
TW-E	Time Window Early
TW-L	Time Window Late
VB	Vessel Breach

1. INTRODUCTION

NUREG/CR-6595, "An Approach for Estimating the Frequencies of Various Containment Failure Modes and Bypass Events," was published in January 1999. Since that time, Draft Regulatory Guide DG-1061 has been replaced by Regulatory Guide (RG) 1.174 which references NUREG/CR-6595 as an approach for estimating LERF. NUREG/CR-6595 was revised and published as a draft-for-comment revision of this report in August 2003. The draft report contains: (1) some new severe accident information in Chapter 2 and Chapter 3 and (2) a new Chapter 4 on a simplified approach to shutdown risk. This final report incorporates comments received.

1.1 Background

The August 1995 U.S. Nuclear Regulatory Commission's (NRC's) Policy Statement [1] related to Probabilistic Risk Analysis (PRA) encourages greater use of PRA techniques to improve safety decision making and enhance regulatory efficiency. One activity in response to this policy statement is the use of PRA in support of decisions related to modifying a plant's current licensing basis (CLB). Draft Regulatory Guide DG-1061 [2] includes staff guidance for using risk information from plant specific PRA study findings and insights, as well as risk metrics, such as core damage frequency (CDF) and Large Early Release Frequency (LERF), in making risk-informed regulatory decisions. The basis for the risk metrics and their relationship to the NRC safety goals are described in its Appendix A. In those cases where only the Level-1 PRA analysis is available, Appendix B of Draft DG-1061 provides a simplified approach to estimate LERF, and change in LERF resulting from changes to a plant's CLB.

It was decided to test the guidance in Appendix B of Draft DG-1061 by performing several case studies [3, 4]. One objective of the case studies is to use information from the Level-1 PRAs documented in Individual Plant Examinations (IPEs) together with the simplified approach to estimate LERF for several different plants. These estimates were in turn compared against LERF estimates obtained directly from the Level-2 results reported in the IPEs for the same plants. The purpose of these comparisons was to identify causes for discrepancies, especially in cases where guidance leads to underestimation or significant over estimation of LERF. The objective is also to identify special PRA assumptions and/or design and operational features that are driving the results and the estimates of split fractions recommended in Draft DG-1061. The results of this exercise are described in Reference [3] and summarized in Appendix B to this report.

Another important recommendation of Reference [4] is to extend the scope of Draft DG-1061 guidance to include external events and modes of operation other than full power. Ways in which the guidance in Draft DG-1061 were expanded to cover a wider scope are described in Reference [4] and also summarized in Appendix B to this report. Based on the results of the case studies, improvements to the guidance and potential modifications to the event trees were developed. These recommendations are presented in Appendix B.

The recommendations of the case studies as well as the public comments received on Draft DG-1061were incorporated into NUREG/CR-6595 published in January 1999. Since that time, Draft Regulatory Guide DG-1061 has been replaced by Regulatory Guide 1.174 [5] which references NUREG/CR-6595 as an approach for estimating LERF. In August 2003, NUREG/CR-6595 was revised and published for comment. The draft version of this report incorporated updated information on direct containment heating and information gathered from the Individual Plant Examination Level-2 studies, and added a separate chapter for shutdown conditions. This final report incorporates the comments received. In addition to improved guidance, more important changes were made to the guidance on shutdown conditions and pressurized water reactor (PWR) late containment failure event tree.

1.2 Objective

This report describes in detail an approach for estimating the frequencies of large and early releases of radioactivity from accidents at nuclear power plants that have the potential for causing early fatalities. The objective is to develop a relatively simple approach that can be interfaced with a Level 1 PRA with a minimum of additional work. The approach is based on Appendix B of Draft DG-1061 and uses simplified containment event trees (CETs) to process information obtained from a Level-1 PRA into an estimate of LERF. The event trees described in this report reflect lessons learned

from the nine case studies described above and in more detail in Appendix B, public comments received on Draft DG-1061 that are pertinent to the simplified approach, additional severe accident information gathered since the original version of NUREG/CR-6595 was published in 1999, and comments received on draft version of NUREG/CR-6595, Revision 1. The guidance of this report was applied to additional case studies on shutdown PRAs as documented in Appendix C.

1.3 Approach

This report describes an approach, which utilizes simplified event trees, designed to supplement Level 1 PRAs submitted in support of risk-informed decisionmaking. The interface between the accident sequence information obtained from a Level-1 PRA and the simplified event trees is crucial and depends, to some extent, upon the system model used. When a large fault tree approach is used, different cutsets of the same accident sequence may have a different impact on the progression of the accident. Therefore, the information associated with each cutset has to be used along with the sequence definition to respond to questions in the simplified event trees. After the dominant cutsets of a sequence are considered, it can be determined if all cutsets of the sequence have the same response to the questions. If not, it is possible to develop basic event based rules that can be applied to the remaining cutsets to determine the response to the questions. In doing so, all core damage cutsets can be included in the simplified event tree analysis. This process is similar to that used for determining plant damage states.

If a large event tree approach is used, the sequence definition should provide sufficient detail to quantify the questions in the simplified event tree. However, with a large number of sequences to be considered, it may also be necessary to determine rules based on the sequence logic to apply to all sequences that contribute significantly to the total core damage frequency.

Once the interface between a Level-1 PRA and the simplified approach has been established, the accident sequence information can be processed through the CETs. However, not all of the information necessary to quantify the event trees is available from a Level-1 PRA. The report indicates what information can be expected from a Level-1 PRA versus what will have to be generated as part of this approach.

In order to allow comparison with the acceptance guidelines identified in RG 1.174 [5], the approach has to distinguish between containment failure modes that might lead to early fatalities versus those failure modes that will not cause early fatalities. Various containment failure mode classes used in this report are defined below:

- Early structural failure – involves failure of the containment structure before, during, or slightly after reactor vessel failure, usually within a few hours of the start of core damage. A variety of mechanisms can cause early structural failure, such as direct contact of the core debris with steel containments, rapid pressure and temperature loads, hydrogen combustion and missiles generated by fuel-coolant interactions.

- Containment bypass – involves failure of the pressure boundary between the high-pressure reactor coolant system and a low-pressure auxiliary system. For pressurized water reactors (PWRs), it can also occur because of the failure of the steam generator tubes, either as an initiating event or as a result of severe accident conditions. In these scenarios, if core damage occurs, a direct path to the environment can exist.

- Containment isolation failure – failure to isolate lines that penetrate the containment (the frequency of containment isolation failure includes the frequency of pre-existing unisolable leaks).

- Late structural failure – involves failure of the containment structure several hours after reactor vessel failure. A variety of mechanisms can cause late structural failure such as gradual pressure and temperature increases due to loss of containment heat removal, hydrogen combustion, and basemat melt-through by the core debris.

- Containment venting – venting is classified as either late or early depending upon when the vents are opened.

The failure modes were categorized as follows:

- Early containment failure, bypass isolation failure or early venting (potentially leading to large early release, i.e., early fatalities likely)
- Late containment failure or late venting (potentially leading to a large release but with sufficient warning time to allow effective evacuation of the surrounding population, i.e., early fatalities unlikely) or containment intact (early fatalities unlikely)
- Late containment failure with potential for early fatalities due to impeded evacuation by seismic events and high winds (For the purpose of estimating LERF, this category is considered a contributor to LERF.)

Once established, the frequencies of these categories can be determined and changes in the frequencies due to changes in a plant's CLB compared against the acceptance guidelines. Five simplified CETs, have been developed to process the Level-1 results of full power operation and allocate the output into one of the above categories. In order to consider the category with late containment failure and potential for early fatalities, a late containment failure event tree was developed for each of the PWR and boiling water reactor (BWR) types, with transfers from those sequences without early containment failure. The following five types of plants are represented by these CETs:

- PWRs with a large volume containment
- PWRs with an ice condenser containment
- BWRs with a Mark I containment
- BWRs with a Mark II containment
- BWRs with a Mark III containment

Each accident sequence is allocated to a risk category based on the status of the plant. The intent is that the split fractions for most of the questions in the trees will be determined from plant-specific accident sequences and plant characteristics. The CETs include recommended split fractions for questions related to the likelihood of early containment failure. These split fractions reflect reasonable estimates of the likelihood of early containment failure for the five containment types given various plant conditions. However, as the split fractions are intended to encompass the likelihood of containment failure for most of the plants within a particular containment type they are somewhat bounding in nature. Consequently, an alternative split fraction (less bounding) could be used for a particular plant provided sufficient justification is given.

For accidents during shutdown, we defined three plant operational states (POSs) based on the configuration of the plant, and further divided them into time windows based whether or not they take place before or after refueling operation. Similar to full power operation, we developed simplified CETs for each of the five types of plants, with the Mark I and II plants having the same CET structure and slightly different guidance on split fractions. The late containment failure event trees of power operation are also used for shutdown conditions. The CETs are applicable to all POSs during shutdown.

1.4 Scope and Limitations

The simplified CETs presented in this report use information provided in a Level-1 PRA to estimate LERF. The trees are structured to interface with Level-1 PRAs for accidents initiated during full power operation and other modes of operation. Accidents initiated by events internal to the plant and external events (such as seismic) can also be processed through the event trees.

The simplified CETs are based on the results of severe accident research performed over the last several years. This research has been incorporated into Level-2 PRAs for numerous nuclear power plants. The CETs were constructed to capture the most important characteristic of severe accident progression that influence the potential for early containment failure or bypass. This focus on estimating early loss of containment integrity allows significant simplification of the CETs but also means that later modes of containment failure are generally not estimated. The exception is those accident sequences that are initiated by external events which can impede evacuation of the population. Under these

circumstances, it is possible that late containment failures could result in early health effects and consequently separate CETs are provided for these accident sequences.

As noted in Section 1.3 above, most of the questions will be determined from information provided in the Level-1 PRA supplemented by additional analysis and information. The CETs include split fractions only for questions dealing with the likelihood of containment failure. These split fractions are intended to encompass the likelihood of containment failure for most plants in each of the five containment types. Consequently, the CETs are somewhat bounding in nature and should only be used as a first step scoping study to determine the proximity of LERF to the decision criteria established in Reference [5]. If the estimated LERF is significantly below (about an order of magnitude or more) the acceptance guideline then expenditure of additional resources to obtain a detailed Level-2 model and a more accurate estimate of LERF is not warranted. However, if the LERF estimated from this simplified approach is close to or larger than the acceptance guideline, further analysis may be necessary to obtain a more accurate LERF for the purpose of risk-informed decisionmaking.

1.5 Organization of Report

The report is organized into three major chapters. Simplified event trees for full power operation are developed for PWR containments in Chapter 2. Two event trees are developed for large volume and ice condenser containments. Similar event trees for full power operation are developed for BWRs in Chapter 3. A total of three BWR event trees are developed for Mark I, Mark II, and Mark III containments. Simplified event trees for shutdown operation are developed in Chapter 4 for both BWRs and PWRs. Two event trees are developed for BWRs, one for Mark I and Mark II containments and another for Mark III containments. Two event trees are developed for PWRs, one for large volume and subatmospheric containments and one for ice condenser containments. Appendix A provides the basis for the LERF risk metrics used in Reference [2] and describes their relationship to the NRC safety goals. Appendix B includes a summary of the nine case studies performed using the original guidance in Draft DG-1061. Appendix C is a summary of the case studies on shutdown conditions carried out using the guidance of this report.

1.6 References

1. USNRC, "Use of Probabilistic Risk Assessment Methods in Nuclear Regulatory Activities; Final Policy Statement," Federal Register: Volume 60, Number 158, August 16, 1995.

2. USNRC, "An Approach for Using Probabilistic Risk Assessment in Risk-Informed Decisions on Plant-Specific Changes to the Current Licensing Basis," Draft Regulatory Guide DG-1061, November 1996.

3. Chu, T-L., Azarm, M.A., "An Evaluation of the Simplified Event Trees Described in Appendix B of Draft Regulatory Guide (DG-1061)," BNL Technical Report, JCN W-6234, July 1998.

4. Chu, T-L., Azarm, M.A., "Extension of Scope of the Simplified Event Trees Described in Appendix B of Draft Regulatory Guide (DG-1061)," BNL Technical Report, JCN W-6234, July 1998.

5. Regulatory Guide 1.174, "An Approach for Using Probabilistic Risk Assessment in Risk-Informed Decisions on Plant-Specific Changes to the Licensing Basis" Revision 1, November 2002.

2. SIMPLIFIED EVENT TREES FOR PWRS

In this chapter, simplified event trees are developed for PWRs. Reactors of this design are housed in one of three containment designs (i.e., large volume, subatmospheric, or ice condenser containments). Large dry and subatmospheric containments rely on large internal volumes and relatively high design pressures to mitigate the consequences of accidents. On the other hand, ice condenser containments are termed "pressure suppression" designs and rely on ice to condense steam released from the reactor coolant system (RCS) during an accident. Ice condenser containments are smaller and have lower design pressures than large dry and subatmospheric designs. Consequently, ice condenser containments have been found to respond to severe accidents differently than large dry and subatmospheric designs. Two simplified event trees are, therefore, developed, one for large dry and subatmospheric containments and a second for ice condenser containments. If the containment did not fail early during an external event such as seismic events and high winds, it is possible that the evacuation be impeded and a late containment failure may still result in early fatality. For this type of sequences, a transfer to the late containment failure event tree has to be followed. The late containment failure event tree considers the potential of a late containment failure caused by core concrete interaction (CCI) and hydrogen combustion.

The approach described in Chapter 1 has been followed with emphasis on minimizing the size of the event trees and on the Level-of prescription provided. Guidance is provided for each question (or top event) in the event trees. Guidance is provided for all initiating events.

2.1 PWR Large Volume Containment

Figure 2.1 presents an event tree for PWRs with large volume or subatmospheric containments that allows allocation of accident sequences to one of two categories (i.e., large early release or no large early release). Each accident sequence in a Level 1 PRA would be allocated to one of these categories based on the plant status as defined by the various accident sequences. This approach prescribes only a single question concerning the likelihood of containment failure at vessel breach (i.e., Question 6). The split fraction for this question reflects a reasonable estimate of the likelihood of early containment failure for large-volume containments given a high or low pressure core meltdown accident. However, an alternative split fraction (less bounding) could be used for a particular plant provided sufficient justification is given. Given that the containment had failed, no credit for the scrubbing of fission products by the containment spray system should be given.

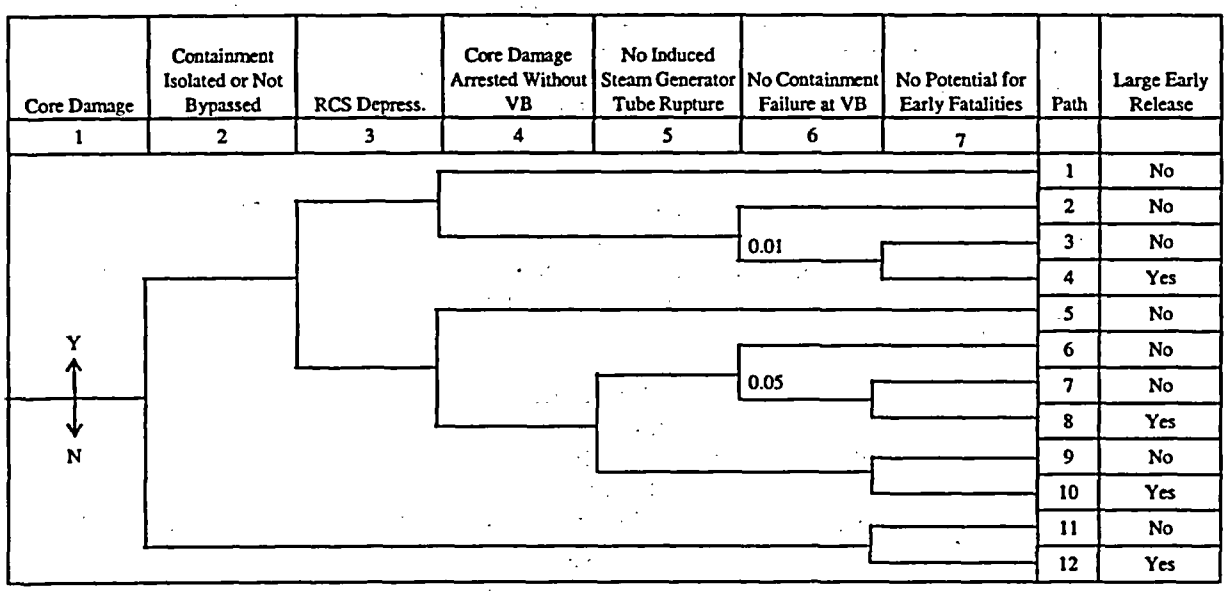

Figure 2.1 PWR Large Dry Containments

2. Simplified Event Trees for PWRs

If the containment structure is predicted to survive (i.e., upper branch of Question 6) and the initiating event can impede evacuation of the close-in population, then the likelihood of long-term containment performance should be investigated by using the event tree in Section 2.3.

Question 1: Core Damage

This is the interface between the Level-1 PRA results and the simplified CETs. Refer to Chapter 1 for a discussion on this interface. The frequency and characteristics of the accident sequence under consideration are required.

Question 2: Containment Isolated or Not Bypassed?

This question addresses the status of containment integrity at the start of the accident. A negative response to this question means containment integrity is lost and the flow path out of containment is sufficiently large (leakage rates greater than 100 percent containment volume per day have been found risk significant in past studies [1,2,3,4]) such that early health effects are likely if core damage occurs. Accident sequences that follow this path (negative response) bypass all other questions in the tree until the question on the potential for early fatalities (refer to Question 7 below).

A positive response to this question means that containment integrity is intact or that the leakage rate is below the threshold necessary for causing early health effects. Accident sequences that follow this path are processed through each of the remaining questions in the tree.

Loss of containment integrity can be caused by internal and external initiating events. Consequently, separate guidance is provided below for different initiating events. In addition, this question is intended to apply only to accidents that bypass containment at accident initiation. Accident sequences that cause containment bypass (such as induced steam generator tube rupture) during accident progression after core damage are not included in this category.

Internal Events and Internal Floods

The following accidents could potentially (depending on the leakage rate) result in a negative response to this question.

- Failure of containment to isolate – These events are not normally modeled as part of a Level-1 PRA so that additional work is needed to quantify this type of accident sequence. In some PRAs, the likelihood of containment isolation failure has been estimated from data. However, given the focus of the simplified event trees on LERF and recognizing that several IPEs [5] found isolation failure to be an important LERF contributor, the containment isolation system should be modeled using a Level-1 type of system analysis, in order to determine the likelihood of containment isolation failure.

- Interfacing systems loss-of-coolant accident (ISLOCA) – These accident sequences are normally quantified as part of the Level-1 PRA so that little additional work should be needed for processing them through the CETs. It is necessary to determine the magnitude of the leakage rate and whether or not the flow path is submerged in order to estimate the potential for a large release. An example of this may be an ISLOCA which results in flooding a room or area.

- Steam generator tube ruptures (SGTR) – Accident sequences initiated by an SGTR are normally quantified as part of the Level-1 PRA, so again, little additional work (to determine the potential for large release) should be needed for processing them through the CETs. However, the condition of the secondary side of the steam generators (SGs) needs also to be addressed under this question, since degraded tubes may increase the potential for a pressure induced rupture. If the pressure differential across the steam generator tubes is increased during the accident progression, there is a probability that pre-existing flaws in the free span of the steam generator tubes will cause a tube to rupture, creating a containment bypass. The probability of induced steam generator tube rupture (ISTGR), at normal temperatures, depends on the degree of tube degradation being experienced by the plant, the degree to which this degradation can be detected by inspection and repaired (or removed from service) during shutdowns, and the rate of degradation during the operating cycle. For plants experiencing rapid tube degradation, the probability of pressure-induced STGR may be significant, and should be evaluated on a plant-specific basis.

In determining the probability of such a pressure induced rupture, the timing of several possible depressurization mechanisms should be addressed. These include operator actions directed by Emergency Operating Procedures (EOPs) or Severe Accident Management Guidelines (SAMGs), steam line relief that valves may become stuck in the open position, and leakage of main steam line (or other) isolation valves that may not be capable of maintaining secondary side steam pressure once the water inventory has been depleted. If the steam side of one or more SGs depressurizes before the RCS depressurizes by a similar amount, the differential pressure across the tubes is increased.

If at least one steam generator has experienced a pressure-induced tube rupture, the lower branch of this question should be followed, and Question 7 is asked. If the depressurized steam generator(s) that experience(s) SGTR(s) is (are) filled with water, sufficient scrubbing may occur to prevent a "large release" of radioactive material to the atmosphere. Water may be present on the steam side of depressurized steam generators in cases where the depressurization was directed by procedures to allow feed by low pressure systems such as condensate, service water or fire water.

If the SGTR has not been induced by depressurization of one or more steam generators with the RCS still pressurized, it is still possible that the tubes will fail later in the accident sequence if they are heated to very high temperatures as the core oxidizes and melts. This scenario is explored in Question 5 below.

- Anticipated transient without scram (ATWS) – These accidents are normally quantified in a Level-1 PRA and have the potential to cause a pressure transient leading to a failure of the steam generator tubes, or a rupture of the RCS pipe with over pressurization failure of the containment. ATWS contributes to containment bypass caused by unfavorable moderator temperature coefficient (MTC). The unfavorable MTC was also evaluated in the IPEs. It is recommended to assume that ATWS sequences with unfavorable MTC would lead to a presssure-induced SGTR and that plant-specific unfavorable MTC fractions be used. It is possible that recent fuel loads might increase the fraction by a significant factor. If so, plant-specific evaluation may be warranted.

- Loss of containment heat removal (CHR) – In these sequences, the containment fails before core damage due to overpressurization, which means that radionuclide release occurs with the containment open. These accident sequences are normally quantified as part of the Level-1 PRA so that little additional work should be needed for processing them through the CETs.

Seismic Events and Internal Fires

A number of external events can cause loss of containment integrity and hence, a negative response to this question.

- Internal fire – A fire can potentially cause a containment isolation valve to fail to close. The potential of this type of accident sequences has to be evaluated using the method of Level-1 internal fire PRA.

- Seismic event – An earthquake can potentially cause structural failure of the containment or its penetration. These events are normally quantified as part of a Level-1 seismic PRA, so that little additional work should be needed for processing them through the CET.

Question 3: RCS Depressurized?

This question addresses the pressure in the reactor coolant system (RCS) during severe accident progression. A negative response to this question implies that the RCS is at high pressure during core meltdown which has implications for the pressure loads at vessel meltthrough (refer to Question 6 below). Conversely, a positive response implies that the RCS is a low pressure. Separate guidance is provided below for different initiating events.

Internal Events

The following accidents defined in the Level-1 PRA could potentially result in a negative response to this question.

- Transients and small break LOCAs – The reactor coolant system will remain at high pressure for these accident sequences unless the operators depressurize the RCS or the RCS pressure boundary fails.

The following accidents defined in the Level-1 PRA could potentially result in a positive response to this question.

- Intermediate and large break LOCAs – These accident sequences are expected to result in a RCS below 200 psi and would, therefore, be allocated to the depressurized branch.

The following are not normally modeled in a Level-1 PRA but could be considered during quantification of the simplified event trees.

- Depressurization by the operator – For accidents initiated by transients, a licensee may wish to take credit for depressurization of the RCS after core damage by the operators. Justification should be provided if such a procedure is assumed. For example, the capacity of relief valves, and the availability of steam generator heat removal should be taken into consideration. Supporting thermal hydraulic analysis may also be needed to determine the RCS pressure.

- Temperature induced hot leg failure – For accidents initiated by transients, a plant may wish to take credit for depressurization of the RCS by temperature induced hot leg failure after core damage. Justification should again be provided if such a failure mechanism is assumed.

Question 4: Core Damage Arrested Without Vessel Breach?

This question addresses any recovery actions taken after the start of core damage to restore coolant injection into the vessel prior to core meltdown and reactor vessel breach. A negative response to this question implies that recovery actions were unsuccessful and the core debris melts through the reactor vessel. A positive response implies that recovery actions were successful and that core damage is terminated and reactor vessel meltthrough is prevented. Separate guidance is provided below for different initiating events.

Internal Events

- Loss of power – Recovery actions to restore injection to the vessel prior to core damage, should have been modeled in the Level-1 PRA. This question addresses recovery actions after core damage but prior to vessel breach. Justification should be provided for any recovery actions assumed. The power recovery curve developed for the Level-1 PRA can be used together with estimates of the time between the start of core damage and vessel failure.

- Depressurization by the operator – For high pressure sequences, a plant may wish to take credit for depressurization of the RCS after core damage to allow injection by low pressure systems. Justification should be provided if such a procedure is assumed.

Seismic Events and Tornados

- Loss of power – For these initiating events, it is unlikely that power will be recovered in the time frame available to prevent core meltdown.

Question 5: No Induced Steam Generator Tube Rupture?

This question applies to accident sequences in which the combination of thermal-hydraulic conditions in the primary and secondary systems during core oxidation and melt creates a potential for creep failure of SG tubes[6].

Thermally-induced tube ruptures are not probable if the steam side of the SGs remains pressurized, even if it is dry. In determining the probability that the RCS will not depressurize sufficiently to prevent thermally-induced SGTR, the effect of the accumulators should be considered. In addition to holding the RCS pressure up by injecting water at their set pressure, the injection of water to the overheated core region may induce pressure spikes. Also, depending on the flow paths that are causing the RCS depressurization, the steam created by injection of water to the lower core region may displace the superheated gases from the upper core region into other portions of the RCS, including the steam generator tubes. Thus, intermediate RCS pressures, in conjunction with depressurized SGs, may still induce SGTR, particularly if there are preexisting flaws in the tubes. There may also be a dependency between this question and Question 4 because recovery of RCS injection capability and its use to arrest core damage before vessel breach may also produce pressure spikes and concurrent hot gas displacements in the RCS that could threaten SG tube integrity.

A negative response to this question implies that thermally ISGTR occurs after the steam generators have dried out and very hot gas is circulating and before any other part of the RCS pressure boundary has failed in a manner that sufficiently depressurizes the RCS to remove stress on the tubes. These accident sequences typically have not been modeled as part of a Level-1 PRA so that additional work is needed to respond to this question in the CET. The likelihood of a temperature-induced creep rupture of the steam generator tubes depends on several factors including the thermal-hydraulic conditions at various locations in the primary and secondary systems, which determine the temperatures and the pressures to which the steam generator tubes and other components in the RCS pressure boundary are subjected as the accident progresses. Phenomena that may affect the temperature of the SG tubes include full loop natural circulation due to RCS loop seal clearing and, for U-tube SGs, partial loop, counter-current circulation. As noted above, other relevant factors include the material properties of the steam generator tubes and other parts of the RCS pressure boundary and the presence of tube defects which increase the likelihood of rupture. Typically, the integrity of SG tubes during the core damage phase of accident sequences is assessed with plant-specific thermal-hydraulic calculations that track these phenomena and compute creep damage to multiple RCS components to determine which is likely to fail first.

There is a dependency between this part of the question and Question 6 below which addresses in-vessel steam explosions. If in-vessel steam explosions occur when the molten core pours or slumps into water pooled in the lower head, the steam generator tubes may fail from the pressure pulse. Similarly, if injection capability is regained before vessel breach and water is injected to arrest core damage, the integrity of the tubes should be assessed against the pressure and temperature conditions created by that process. Thus, this question is intended to cover steam generator tube integrity up until the time of vessel meltthrough or successful stabilization of the core.

If ISGTR occurs, a potential bypass of the containment can result if the secondary system is open or is opened by the effects of the SGTR.

The probability of induced SGTR has been found [5] to be significant in several IPEs. Additional review of these issues has been conducted by the Advisory Committee for Reactor Safeguards, and the results of this review have been documented in NUREG-1740 [7]. Quantification of these issues should consider the latest information and codes since NUREG-1570 [6]. The issue of ISGTR is continuing to be researched[8], and more specific guidance may be developed in the future.

Question 6: No Containment Failure at Vessel Breach?

This question addresses whether or not containment failure occurs at vessel breach. A positive response to this question implies that the containment structure survives the loads at vessel breach and the accident is allocated to the no large release category. If the containment structure is predicted to survive (i.e., upper branch of Question 6) and the initiating

event (i.e., seismic or high wind) can impede an evacuation of the close-in population, then the likelihood of long-term containment performance should be investigated by using the event tree in Section 2.3.

A negative response implies containment failure with the potential for a large release depending upon the response to Question 7. The likelihood of containment failure depends upon several factors such as the pressure in the primary system, the amount and temperature of the core debris exiting the vessel, the size of the hole in the vessel, the amount of water in the cavity, the configuration of the cavity, the operability of the containment spray system, and the structural capability of the containment building. In the simplified event tree, only the pressure in the primary system is distinguished so that all other considerations have to be folded into the split fractions for high- and low-pressure sequences. Each possibility is discussed below.

Low-Pressure Sequences?

Under these circumstances, various mechanisms could challenge containment integrity. These include in-vessel steam explosions, rapid steam generation caused by core debris contacting water in the cavity, and hydrogen combustion. On the basis of previous PRAs [1, 9, 10], a probability of early containment failure of 0.01 was selected. An alternative split fraction could be used for a particular plant provided sufficient justification is given.

High-Pressure Sequences?

Several mechanisms could challenge containment under these circumstances. The most important failure mechanisms for high-pressure core meltdown sequences are associated with high pressure melt ejection (HPME). Ejection of the core debris at high-pressure can cause the core debris to form fine particles that can directly heat the containment atmosphere (i.e., direct containment heating [DCH]) and cause rapid pressure spikes. During HPME, the hot particles could also ignite any combustible gases in containment, thereby adding to the pressure pulse. The potential for DCH to cause containment failure depends on several factors, such as the primary system pressure, the size of the opening in the vessel, the temperature and composition of the core debris exiting the vessel, the amount of water in the cavity, and the dispersive characteristics of the reactor cavity. In-vessel steam explosions are a potential failure mechanism, but it is more difficult to trigger steam explosions at high pressure than at low pressure. More recent research (documented in Reference [11]), since the first version of this document was published, indicates that HPME and DCH are not important to risk in plants with large volume dry and sub-atmospheric containments and the conditional probability of containment failure given HPME is less than 0.01. Reference [11] indicates that in-vessel steam explosions are very unlikely and also have insufficient energy to launch the reactor head or the vessel as a rocket and damage containment. Ex-vessel fuel-coolant interactions that could lead to a steam explosion depend on plant geometry, pool conditions (size, shape, temperature and pressure), and corium conditions (temperature, pour rate and pour composition). The only consideration that could affect the potential for energetic fuel coolant interactions is the presence or absence of the ability to put water below the reactor vessel. The probability of early containment failure is a composite of each of these potential failures modes and a value of 0.05 was selected based on References [5] and [11]. Again, an alternative split fraction could be used for a particular plant provided sufficient justification is given.

Question 7: No Potential for Early Fatalities?

This question addresses whether or not early fatalities are likely given a loss of containment integrity. The potential for early fatalities depends on the magnitude and timing of the radionuclide release. The magnitude of the release is important because there is a threshold below which the doses from the early exposure pathways will be unlikely to cause an early fatality. This threshold is discussed in more detail in Appendix A to this report. The timing of release is also important because of radionuclide decay and because of its relation to the time required for evacuation of the close-in population around a nuclear power plant.

Accident sequences that feed into this question have a flow path out of containment that is sufficiently large so that early health effects are likely. In order to respond to this question, the time from the declaration of a general emergency to the time of the start of the release has to be determined and compared to the time required to effectively warn and evacuate the population in the vicinity of the plant. In some accident sequences, containment failure occurs hours after

the declaration of a general emergency giving time for evacuation of the population. However, for other accident sequences loss of containment integrity occurs prior to or closely after the start of core damage allowing relatively short times for evacuation.

Seismic Events and High Wind

For some initiating events, it is possible that effective warning and evacuation may be precluded due to the disruption of warning systems and evacuation paths. These types of initiating events should in general be allocated to the potential for early fatality branch on the event tree. In order to place a sequence on the branch labeled no potential for early fatalities, a licensee should provide information, specific to the sequence, concerning when a general emergency would be declared and whether or not the population could in fact be evacuated.

2.2 PWR Ice Condenser Containment

Figure 2.2 provides a CET for ice condenser plants. As with large volume containments, outcomes of the CET for ice condenser plants are placed in a large early release or no large early release category. Late failures, which generally occur as a result of failure of the long-term CHR systems, and on all other accidents are assigned a low consequence category. There is considerable similarity in the event trees for large dry and ice condenser containments, and many of the questions are similar.

If the containment structure is predicted to survive (i.e., upper branch of Question 7) and the initiating event can impede an evacuation of the close-in population, then the likelihood of long-term containment performance should be investigated by using the event tree in Section 2.3.

Question 1: Core Damage

This is the interface between the Level-1 PRA results and the simplified CETs. Refer to Chapter 1 for a discussion on this interface. The frequency and characteristics of the accident sequence under consideration are required.

Question 2: Containment Isolated or Not Bypassed?

This top event is similar to the question asked in the event tree for large volume containments. The guidance provided for Question 2 in Section 2.1 should be used to respond to this question.

Question 3: Hydrogen Igniters Operating Before Top of Active Fuel?

The smaller volume containments, such as ice condensers, are critically dependent on the availability of hydrogen igniters to control pressure loads resulting from hydrogen combustion involving both static and dynamic loads. The annular design of the ice compartments lends itself to build up of hydrogen concentrations. There is a significant probability of a hydrogen combustion event causing containment failure if the igniters are not operating before the level reaches the top of active fuel (TAF).

The information needed to address this question is generally not modeled in a Level-1 PRA. The igniters require ac power to operate and are usually started manually. In principle, a detailed fault tree could be developed for the igniter system and integrated into the Level-1 model. Without developing a fault tree, a way to quantify this question is to simply assume that the igniters are available as long as ac power is available. If a plant installed a dedicated power supply for the igniters, then the likelihood that the igniters would lose their power supply would be significantly reduced.

2. Simplified Event Trees for PWRs

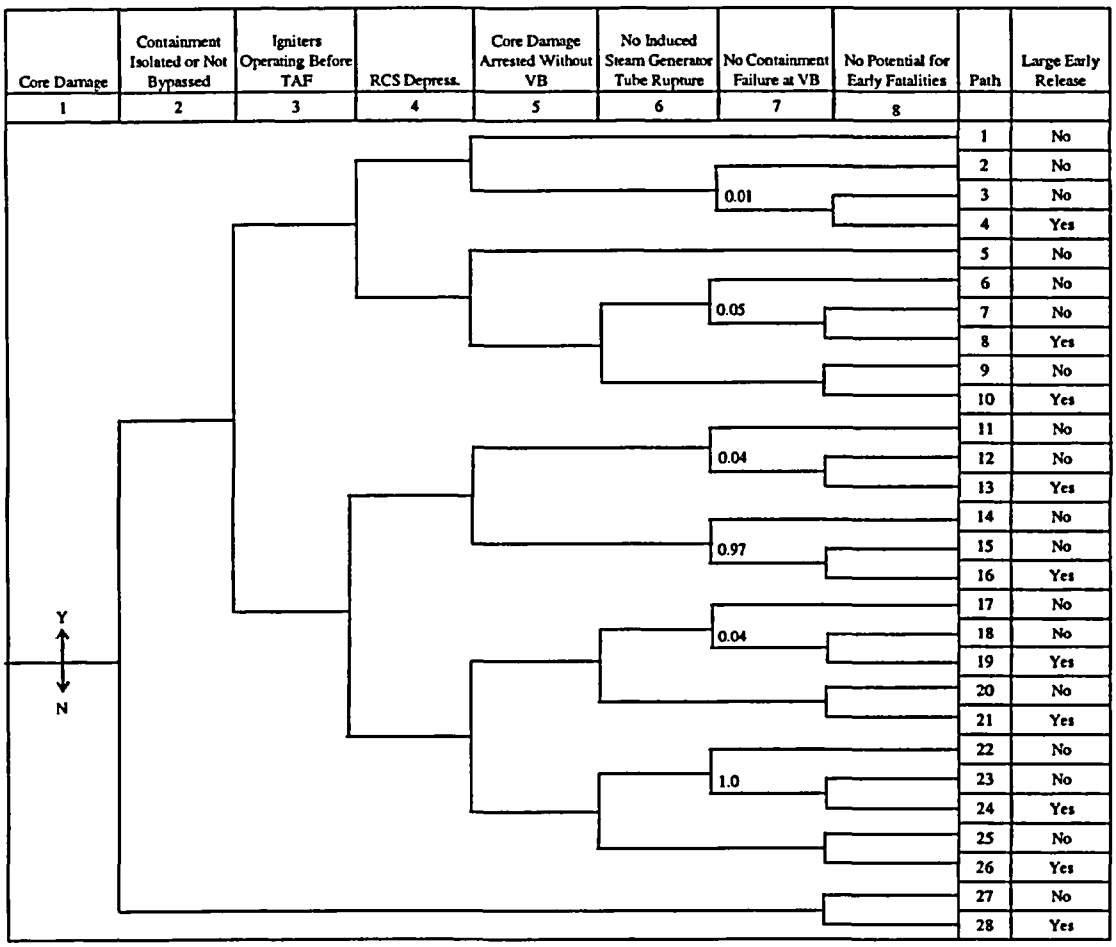

Figure 2.2 PWR Ice Condenser Containments

Question 4: RCS Depressurized?

This top event is similar to the question asked in the event tree for large volume containments. The guidance provided for Question 3 in Section 2.1 should be used to respond to this question.

Question 5: Core Damage Arrested Before Vessel Failure?

This top event is similar to the question asked in the event tree for large volume containments. The guidance provided for Question 4 in Section 2.1 should be used to respond to this question.

Question 6: No Induced Steam Generator Tube Rupture?

This top event is similar to the question asked in the event tree for large volume containments. The guidance provided for Question 5 in Section 2.1 should be used to respond to this question.

Question 7: No Containment Failure at or Before Vessel Breach?

If the igniters are not available or not operating, the potential exists for failure of the containment as a result of hydrogen combustion before the vessel breach. This failure can, therefore, occur even if the core damage is arrested in the vessel. The probability of a hydrogen combustion event causing containment failure before the vessel breach was determined to be 0.04 based on the results in References [5] and [12]. An alternative split fraction could be used for a particular plant provided sufficient justification is given. If the igniters are operating, the containment is assumed not to fail before the vessel breach. As for the large dry containments, the likelihood of containment failure at vessel breach depends on several factors, such as the pressure in the primary system, the amount and temperature of the core debris exiting the vessel, the size of the hole in the vessel, the operability of the containment spray system, whether or not the igniters are operating, the amount of ice left in the ice chests, the amount of water in the cavity, the configuration of the cavity, and the structural capability of the containment building. In the simplified event tree in Figure 2.2, the pressure in the primary system, and the operability of the igniters, are considered so that all other considerations have to be folded into the appropriate split fractions in the event tree. Recently, a detailed study [13] of severe accident phenomena in ice condenser plants focused on the direct containment heating issue has been published. The study considered all the significant early containment failure issues discussed in NUREG-1150 including: (1) DCH overpressure (O/P) failures, (2) thermal failures of the containment liner resulting from accumulation of the dispersed core debris against the containment liner following HPME, (3) non-DCH hydrogen combustion O/P failures in scenarios where core damage is arrested in vessel or when the RPV fails at low pressure, and (4) non-DCH steam spike O/P failures when the vessel lower head fails at low (<200 psi) RCS pressures. The study used the CONTAIN code and the results of the calculations indicate that the ice condenser containment integrity is challenged mainly in station blackout (SBO) accident sequences (no igniters available) that are associated with high hydrogen concentrations.

Low-Pressure Sequences?

Under these circumstances, various mechanisms could challenge containment integrity including in-vessel steam explosions, rapid steam generation caused by core debris contacting water in the cavity, and hydrogen combustion. For ice condenser containments, as shown in Reference [13], the likelihood of these failure modes depends mainly upon the operability of the igniters. On the basis of Reference [13], for low pressure (non-DCH) events, the mean conditional probability of early containment failure across all ice condenser plants for SBO sequences ranges from 0.2 to 0.97 mainly from hydrogen combustion events. Initial screening could be performed conservatively with the highest value of 0.97, or the plant specific conditional probability of early containment failure at vessel breach estimated in Reference [13], could be used. An alternative split fraction could be used for a particular plant provided sufficient justification is given.

High-Pressure Sequences?

Reference [13] indicates that the average conditional containment failure probability across all ice condenser plants due to hydrogen combustion during SBO accidents at high pressure ranges from 0.82 to 1.0. Another failure mechanism associated with HPME in ice condenser containments is impingement of corium on the containment wall, which can lead to failure and a direct path out of containment.

The probability of early containment failure at or before vessel breach is, therefore, a composite of each of these potential failure modes. Initial screening could be performed with the value of 1.0, or the plant specific conditional probability of early containment failure at or before vessel breach estimated in Reference [13], could be used. An alternative split fraction could be used for a particular plant provided sufficient justification is given.

Question 8: No Potential for Early Fatalities?

This top event is similar to the question asked in the event tree for large volume containments. The guidance provided for Question 7 in Section 2.1 should be used to respond to this question.

2.3 PWR Late Containment Failure

If a late containment failure is predicted to occur for accidents where evacuation is not effective, e.g., seismic events and high winds, it is assumed that early fatalities are possible. The purpose of the CET in Figure 2.3 is to provide an estimate of the likelihood of late containment failure. The focus is on structural failure of the containment above grade. Two types of failure causes are considered, core concrete interaction(CCI) and hydrogen combustion. CCI is a concern for those sequences with VB, and late hydrogen combustion is applicable to ice condenser plants only. Penetration of the basemat by the core debris is a potential late failure mode but as the release occurs very late and below ground early fatalities are extremely unlikely even if evacuation is impeded. The CET should only be used for accident sequences initiated by those external events that can impede evacuation of the close-in population, i.e., seismic and high wind. The fraction of these accident sequences that did not result in containment failure in the previous CET are processed through the CET in this section. The endstates of the late containment event tree represent whether or not the release is large enough to cause early fatality.

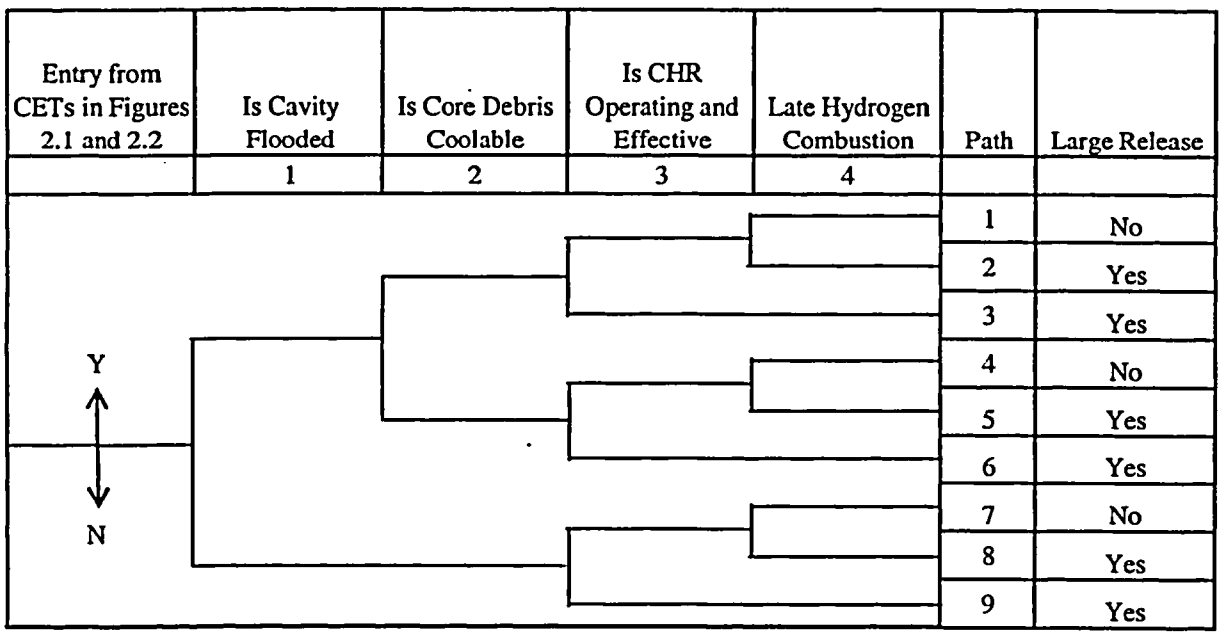

Figure 2.3 Late Containment Failure for PWRs

Question 1: Is Cavity Flooded?

It is important to know if the region under the vessel is flooded. A flooded cavity could cool the core debris and prevent core-concrete interactions (coolable debris bed) and eliminate noncondensible gas release from this mechanism. The main source of containment pressurization is from steam if the debris bed is coolable. If the cavity is dry, extensive core-concrete interactions can occur resulting in significant release of noncondensible gases leading to high pressures and temperatures in containment.

The question cannot usually be answered directly from a Level-1 PRA. The containment layout and the accident sequence definitions need to be combined to assess the potential for a flooded cavity. For example, in some containment designs if the water in the refueling water storage tanks is injected into containment, then the reactor cavity will be flooded. However, in other containment designs, accident management strategies are needed to ensure that sufficient water is injected into containment in order to flood the reactor cavity. It is also important that replenishment to the cavity be established such that the cavity can remain flooded for an extended period of time.

Question 2: Is Core Debris Coolable?

This question addresses the likelihood of coolability of the core debris released into the reactor cavity. Coolability of the core debris requires that the cavity region under the vessel be flooded (positive response to Question 1) and that the molten core materials are fragmented into particles of sufficient size to form a coolable configuration. Debris bed coolability is an important issue because if the debris forms a coolable geometry, the only source for containment pressurization will be the generation of steam from boiloff of the overlying water. Under these circumstances, if containment heat removal systems are available (Question 3), then late containment failure would be prevented. Even in the absence of containment heat removal, pressurization from water boiloff is a relatively slow process and would result in very late containment failure allowing time for remedial actions.

There is, however, a significant likelihood that, even if a water supply is available, the core debris will not be coolable and, therefore, will attack the concrete basemat. Under these circumstances, noncondensible gases would be released in addition to steam and add to containment pressurization.

Formation of a coolable debris bed depends on several factors, such as the mode of contact between the core debris and water, the size distribution of the core debris particles, the depth of the debris bed, and the water pool. As a general rule, unless the debris bed is calculated to be thin, both a coolable and noncoolable configuration should be considered for the purposes of CET quantification.

Question 3: Is CHR Operating and Effective?

This question addresses whether or not a CHR system, i.e., containment spray system, is available and effective a long time after vessel breach. A positive response implies that containment integrity will be maintained whereas a negative response results in containment failure. The ability of a CHR system to operate effectively depends upon the containment environmental conditions, which in turn depend upon whether or not the cavity is dry. Each possibility is, therefore, discussed below.

Dry Cavity

If the cavity is dry, the core debris will generally not be coolable and Question 2 is irrelevant. Extensive core-concrete interaction (CCI) will occur and noncondensible gases, steam and radionuclides will be released to containment. In addition, combustible gases (H_2 and CO) will also be released during CCI and could result in combustion events. A dry cavity results in an extremely harsh environment in which the CHR system must operate. Under these circumstances, the ability of the available CHR system to operate effectively needs to be carefully assessed.

Flooded Cavity

If the cavity is flooded, then the response to Question 2 (core debris coolability) is important to CET quantification. Each possibility is discussed below.

Core debris coolable. If the core debris is coolable, CCI does not occur and all of the decay heat goes into boiling water. If the containment heat removal systems are operating, then late containment failure by overpressurization will be prevented. If the containment heat removal systems are not operating, then containment failure will eventually occur unless remedial actions are taken.

Core debris uncoolable. If the core debris is not coolable, CCI will occur and the impact of noncondensible and combustion gases will have to be taken into account for CET quantification.

2. Simplified Event Trees for PWRs

Question 4: Is There Late Hydrogen Combustion?

This question is only applicable to ice condenser plants. For those sequences with igniters not available and hydrogen combustion did not happen early, a late hydrogen combustion could cause failure of the containment. It is recommended that a probability of 1 be used. For those sequences with igniters available, this question needs not be considered.

2.4 References

1. "Review of Light Water Reactor Regulatory Requirements," NUREG/CR-4330, April 1986.

2. "Performance-Based Containment Leak-Test Program," NUREG-1493, January 1995.

3. "Risk Importance of Containment and Related ESF System Performance Requirements," NUREG/CR-6418, November 1998.

4. USNRC, "Basis Document for large Early Release Frequency (LERF) Significance Determination Process (SDP), Inspection Findings that May Affect LERF," NUREG-1765, December 2002.

5. USNRC, "Individual Plant Examination Program: Perspectives on Reactor Safety and Plant Performance," NUREG-1560, November 1996.

6. USNRC, "Risk Assessment of Severe Accident-Induced Steam Generator Tube Rupture," NUREG-1570, May 1998.

7. USNRC, "Voltage-Based Alternative Criteria," NUREG-1740, March, 2001.

8. USNRC, "Update of the Risk-Informed Regulation Implementation Plan," SECY-04-0068, U. S. Nuclear Regulatory Commission, April 23, 2004.

9. Park, C.K., et al., "Evaluation of Severe Accident Risks: Zion Unit 1," NUREG/CR-4551, Vol. 7, Rev. 1, BNL-NUREG-52029, Brookhaven National Laboratory, March 1993.

10. Breeding, R.J., et al., "Evaluation of Severe Accident Risks: Surry Unit 1," NUREG/CR-4551, SAND86 1309, Vol. 3, Rev. 1, Part 1, Sandia National Laboratories, October 1990.

11. US NRC, "Resolution of the Direct Containment Heating Issue for All Westinghouse Plants with Large Dry Containments or Subatmospheric Containments", NUREG/CR-6338, February 1996.

12. Gregory, J.J., et al., "Evaluation of Severe Accident Risks: Sequoyah, Unit 1," NUREG/CR-4551, Vol. 5, Rev. 1, Parts 1 and 2, Sandia National Laboratories, December 1990.

13. Pilch, M.M., et al., "Assessment of the DCH Issue for Plants with Ice Condenser Containments," NUREG/CR-6427, April 2000.

3. SIMPLIFIED EVENT TREES FOR BWRs

In this chapter, simplified event trees are developed for BWRs. Reactors of this design are housed in one of three containment designs (i.e., Mark I, Mark II and Mark III containments). All BWR containments are termed "pressure suppression" designs and rely on water to condense steam released from the reactor coolant system (RCS) during an accident. Mark I and Mark II containments are smaller than Mark III containments. Consequently, Mark I and Mark II containments are inerted during operation to minimize the threat from combustion events. Mark III containments are similar (in terms of internal volume and design pressure) to PWR ice condenser containments and therefore have igniter systems installed. The three different BWR containment designs have been found to respond to severe accidents differently and, therefore, three simplified event trees are developed and described in this chapter.

The approach described in Chapter 1 has been followed with emphasis on minimizing the size of the event trees and on the level of prescription provided. Guidance is provided for each question (or top event) in the event trees. The guidance is intended to apply to all initiating events.

3.1 BWR Mark I Containment

Figure 3.1 provides an event tree allowing allocation of accident sequences to one of two consequence categories (i.e., large early release or no large early release) for use with probabilistic risk assessments (PRAs) for BWRs with Mark I containments. The structure of the event tree is based on the premise that all early releases that are scrubbed by the suppression pool are sufficiently low that, by themselves, they will not result in individual early fatality risk. The event tree models different ways this scrubbing function of the suppression pool becomes ineffective. For each of the sequences that lead to the "Yes" endstate, the containment had failed in such a way the scrubbing function is not assured. Given that the containment had failed, no credit for the scrubbing of containment spray system should be given without supporting justification. The approach prescribes only a single question concerning the likelihood of containment failure at vessel breach (i.e., Question 6). The split fraction for this question reflects a reasonable estimate of the likelihood of early containment failure for a Mark I containment. However, an alternative split fraction (less bounding) could be used for a particular plant provided sufficient justification is given.

If the containment structure is predicted to survive (i.e., upper branch of Questions 6 and 7) and the initiating event can impede evacuation of the close-in population, then the likelihood of long-term containment performance should be investigated by using the event tree in Section 3.4.

Question 1: Core Damage

This is the interface between the Level-1 PRA results and the simplified containment event trees (CETs). Refer to Chapter 1 for a discussion on this interface. The frequency and characteristics of the accident sequence under consideration are required.

Question 2: Containment Isolated or Not Bypassed?

This question addresses the status of containment integrity at the start of the accident. A negative response to this question means containment integrity is lost and the flow path out of containment is sufficiently large (leakage rates greater than 100 percent containment volume per day have been found risk significant in past studies [1,2,3,4]) such that early health effects are likely if core damage occurs.

3. Simplified Event Trees for BWRs

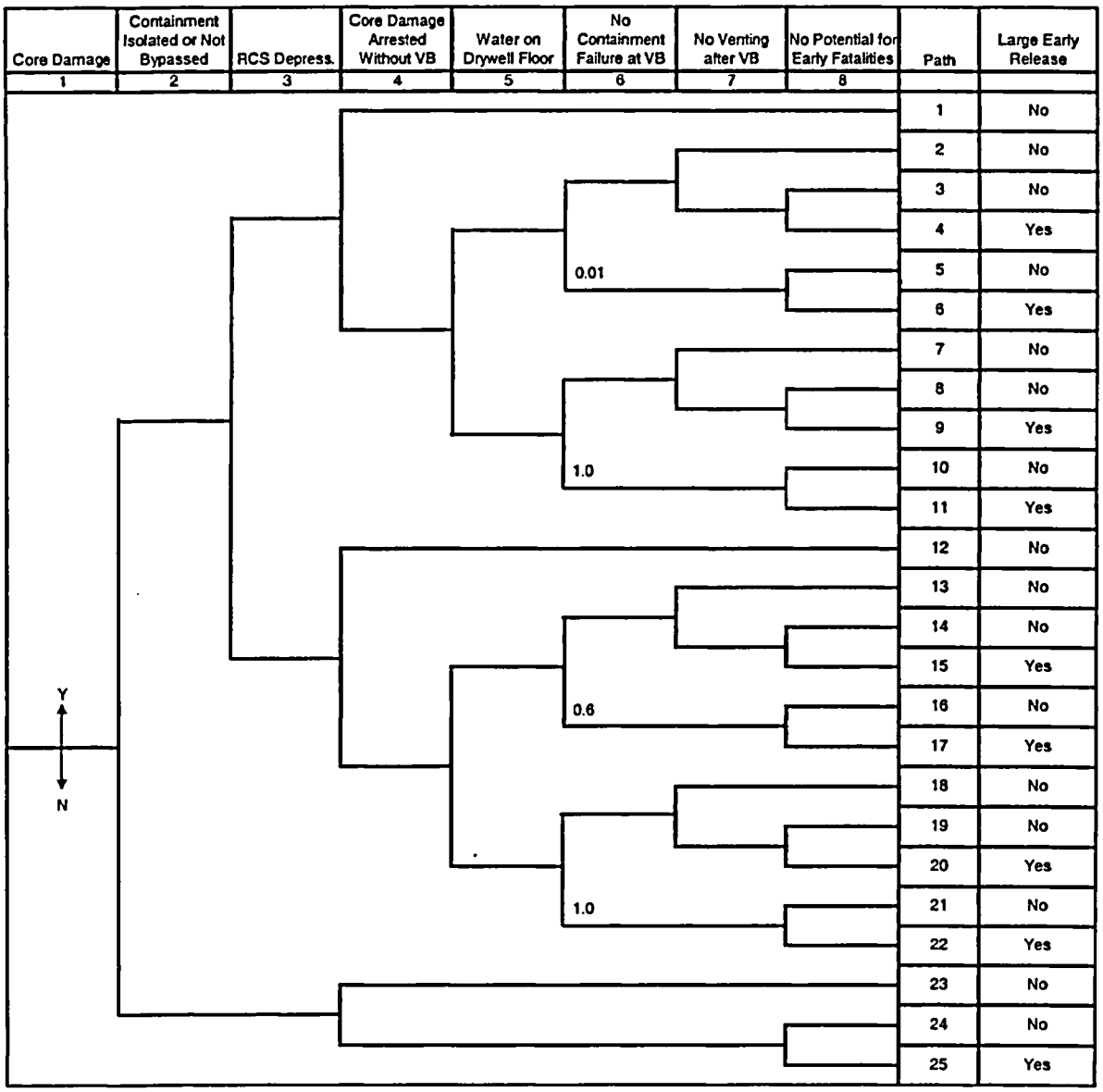

Figure 3.1 BWR Mark I Containments

A positive response to this question means that containment integrity is intact or that the leakage rate is below the threshold necessary for causing early health effects. Accident sequences that follow this path are processed through each of the remaining questions in the tree.

Loss of containment integrity can be caused by internal and external initiating events. Consequently, separate guidance is provided below for different initiating events and modes of operation. In addition, this question is intended to apply only to accidents that bypass containment at accident initiation. Accident sequences that cause containment bypass during accident progression after core damage are not included in this category.

Internal Events and Internal Floods

The following accidents could potentially (depending on the leakage rate) result in a negative response to this question.

- Failure of containment to isolate – These events are not normally modeled as part of a Level-1 PRA so that additional work would be needed to quantify this type of accident sequence. In general, all lines penetrating the containment, including vacuum breakers between drywell and wetwell, should be considered. However, because Mark I containments are inert during operation this failure mode is generally not important for this class of containments. Special consideration should be given to those lines that are normally open and have to be closed in a severe accident, e.g., feedwater lines and main steam lines. A Level-1 type of analysis should be performed to evaluate the likelihood of isolation failures.

- Interfacing systems loss-of-coolant accident (ISLOCA) – These accident sequences are normally quantified as part of the Level-1 PRA so that little additional work should be needed for processing them through the CETs. Breaks outside the containment should be included as ISLOCAs, e.g., main steam line break and feedwater line break. It is necessary to determine the magnitude of the leakage rate and whether or not the flow path is submerged (i.e., the release is scrubbed) in order to estimate the potential for a large release. Examples of submerged ISLOCA paths may include those to an area flooded as a result of the ISLOCA.

- Anticipated transient without scram (ATWS) and Loss of containment heat removal (CHR) – These accident sequences are normally quantified as part of the Level-1 PRA so that little additional work should be needed for processing them through the CETs. In these sequences, the containment fails before core damage due to overpressurization, and, if the suppression pool is bypassed, this may result in a large, early release. For Mark I containments, data generated in the IPE program [5] estimated a conditional probability equal to 0.3 of early containment failure and suppression pool bypass due to ATWS events.

Seismic Events and Internal Fires

A number of external events can cause loss of containment integrity and hence, a negative response to this question.

- Internal fire – A fire can potentially cause a containment isolation valve to fail to close. The potential of this type of accident sequences has to be evaluated using the method of Level-1 internal fire PRA.

- Seismic event – An earthquake can potentially cause structural failure of the containment or its penetration. Again, these events are normally quantified as part of a Level-1 seismic PRA.

Question 3: RCS Depressurization?

This question addresses the pressure in the RCS during severe accident progression. A negative response to this question implies that the RCS is at high pressure during core meltdown which has implications for the pressure loads at vessel meltthrough (refer to Question 6 below). Conversely, a positive response implies that the RCS is a low pressure. Separate guidance is provided below for different initiating events.

Internal Events

The following accidents defined in the Level-1 PRA could potentially result in a negative response to this question.

- Transients and small break LOCAs – The reactor coolant system will remain at high pressure for these accident sequences unless the operators depressurize the RCS or the RCS pressure boundary fails.

3. Simplified Event Trees for BWRs

The following accidents defined in the Level-1 PRA could potentially result in a positive response to this question.

- Intermediate and large break LOCAs – These accident sequences are expected to result in a RCS below 200 psi and would, therefore, be allocated to the depressurized branch.

The following are not normally modeled in a Level-1 PRA but could be considered during quantification of the simplified event trees.

- Depressurization by the operator – A plant may wish to take credit for depressurization of the RCS after core damage by the operators. Justification should be provided if such a procedure is assumed.

Question 4: Core Damage Arrested Without Vessel Breach?

This question addresses any recovery actions taken after the start of core damage to restore coolant injection into the vessel prior to core meltdown and reactor vessel breach. A negative response to this question implies that recovery actions were unsuccessful and the core debris melts through the reactor vessel. A positive response implies that recovery actions were successful and that core damage is terminated and reactor vessel meltthrough is prevented. Separate guidance is provided below for different initiating events.

Internal Events

- Loss of power – Recovery actions to restore injection to the vessel prior to core damage, should have been modeled in the Level-1 PRA. This question addresses recovery actions after core damage but prior to vessel breach. Justification should be provided for any recovery actions assumed. The power recovery curve developed for the Level-1 PRA can be used together with estimates of the time between the start of core damage and vessel failure.

- Depressurization by the operator – For high pressure sequences, a plant may wish to take credit for depressurization of the RCS after core damage to allow injection by low pressure systems. Justification should be provided if such a procedure is assumed.

Seismic Events and Tornados

- Loss of power – For these initiating events, it is unlikely that power will be recovered in the time frame available to prevent core meltdown.

Question 5: Water on the Drywell Floor?

Water in the drywell will affect both the likelihood of ex-vessel steam explosions and the likelihood and consequences of liner meltthrough. Small amounts of water will have limited mitigating effects. It is believed that water levels in excess of 12" will be effective in substantially reducing the probability of melt through and/or partially scrubbing the releases. In taking credit for the presence of water, factors, such as the height of the downcomers, pumping capacity, and power availability, must be considered. For this question, the top branch is the fraction of the remaining sequences (excluding sequences accounted for by previous questions) in which at least 12" of water will be available, and the bottom branch is the fraction where 12" of water will not be available.

Question 6: Containment Failure at Vessel Breach (VB)?

Depending on the answers to Questions 3 and 5, the containment failure probability is assigned. These failure probabilities implicitly account for the following phenomena: in-vessel explosions, ex-vessel steam explosions, vessel blowdown, liner meltthrough, and direct heating. They do not consider long-term failure modes, such as core-concrete interactions or long-term drywell heatup. Bypass events have been accounted for previously. The conditional

probability of containment failure at vessel breach for Mark I plants is strongly influenced by two factors as shown in NUREG-1765 [4]: (1) whether the RCS is at high or low pressure, and (2) for low pressure sequences whether water is available for ex-vessel cooling of the core debris on the drywell floor. If the RCS is at high pressure when the vessel fails that has important implications for the pressure loads on the containment structure. Water on the floor of the drywell will considerably reduce the chances of liner melt through as documented in NUREG/CR-5423 [6] and NUREG/CR-6025 [7]. Suggested branch probabilities for the conditional probability of early failure derived from Reference [4] for these questions are given in Table 3-1.

Table 3-1 Mark I Conditional Probabilities of Containment Failure at Vessel Breach

Path	RPV Pressure	Water	Total Failure Probability
6	Lo	Yes	0.01
11	Lo	No	1.0
17	Hi	Yes	0.6
22	Hi	No	1.0

An NRC-sponsored study on DCH in Mark I containments examined this issue for the Peach Bottom plant and concluded that it added about 2% to the conditional containment failure probability for high pressure failures of the RCS [8]. In the context of the values in Table 3.1, this additional vulnerability does not add significantly to the conditional containment failure probability.

Plant-specific features that increase the containment failure probability should be considered and not only those plant-specific features that mitigate severe accidents. For example, in some individual plant examinations (IPEs) for BWRs with isolation condensers, a potential was found to exist in some IPEs [5] for an induced failure of the condenser tubes (this is a similar failure mode to induced failure of steam generator tubes). This failure mode should be considered for BWRs with an isolation condenser.

Question 7: No Venting After Vessel Breach?

The BWR owner's group have developed [5] emergency procedure guidelines (EPGs) that instruct the operators to flood the drywell after vessel breach, and vent the drywell using drywell vents or vent the reactor pressure vessel (RPV) by opening the main steam isolation valves (MSIVs). This operator action is an accident management strategy that was found [5] to contribute to large early release frequency (LERF) in several IPEs. If such an operator action is performed after vessel breach in an accident scenario, the lower branch under this top event should be followed. The latest plant specific procedures which may incorporate revisions to the BWR owner's group EPGs should be used in answering this question. Wetwell venting is the only effective way of preventing containment overpressurization without bypassing the suppression pool. If a plant performs drywell venting and uses drywell sprays to reduce the releases, technical justification to credit its effectiveness should be provided.

Question 8: No Potential for Early Fatalities?

This top event is similar to the question asked in the event tree for PWR large volume containments. The guidance provided for Question 7 in Section 2.1 should be used.

Internal Events

Accident sequences that feed into this question have a flow path out of containment that is sufficiently large so that early health effects are likely. For a BWR Mark I containment this implies that the suppression pool has been bypassed (i.e., an unscrubbed release). In order to respond to this question, the time from the declaration of a general emergency to

the time of the start of the release has to be determined and compared to the time required to effectively warn and evacuate the population in the vicinity of the plant. In some accident sequences, containment failure occurs hours after the declaration of a general emergency giving time for evacuation of the population. However, for other accident sequences loss of containment integrity occurs prior to core damage allowing relatively short times for evacuation.

Seismic Events and High Wind

For some initiating events, it is possible that effective warning and evacuation may be precluded due to the disruption of warning systems and evacuation paths. These types of initiating events should in general be allocated to the potential for early fatality branch on the event tree. In order to place a sequence on the branch labeled no potential for early fatalities, a licensee should provide information, specific to the sequence, concerning when a general emergency would be declared and whether or not the population could in fact be evacuated.

3.2 BWR Mark II Containment

Figure 3.2 provides an event tree which allows accident sequences to be allocated to one of two consequence categories (i.e., large early release or no large early release) for use with PRAs for BWRs with Mark II containments. The structure of the event tree is based on the premise that all early releases that are scrubbed by the suppression pool are sufficiently low that, by themselves, they will not result in individual early fatality risk. The event tree models different ways this scrubbing function of the suppression pool becomes ineffective. For each of the sequences that lead to the "Yes" endstate, the containment had failed in such a way the scrubbing function is not assured. Given that the containment had failed, no credit for the scrubbing of containment spray system should be given without supporting justification. Each top event question in the event tree is discussed below. The approach prescribes only a single question concerning the likelihood of containment failure at vessel breach (i.e., Question 6). The split fraction for this question reflects a reasonable estimate of the likelihood of early containment failure for a Mark II containment. However, an alternative split fraction (less bounding) could be used for a particular plant provided sufficient justification is given. This event tree is identical to the event tree for a Mark I containment and, therefore, only guidance unique to a Mark II containment is provided.

If the containment structure is predicted to survive (i.e., upper branch of Questions 6 and 7) and the initiating event can impede evacuation of the close-in population, then the likelihood of long-term containment performance should be investigated by using the event tree in Section 3.4.

Question 1: Core Damage

This is the interface between the Level-1 PRA results and the simplified CETs. Refer to Chapter 1 for a discussion on this interface. The frequency and characteristics of the accident sequence under consideration are required.

Question 2: Containment Isolated or Not Bypassed?

This top event is similar to the question asked in the event tree for Mark I containments. The guidance provided under Question 2 in Section 3.1 should be used to respond to this question. Data generated in the IPE program indicates that the conditional probability of early containment failure and suppression pool bypass due to ATWS events is 0.4 in BWR Mark II containment plants.

Question 3: RCS Depressurized?

This top event is similar to the question asked in the event tree for Mark I containments. The guidance provided under Question 3 in Section 3.1 should be used to respond to this question.

Question 4: Core Damage Arrested Before Vessel Breach?

This top event is similar to the question asked in the event tree for Mark I containments. The guidance provided under Question 4 in Section 3.1 should be used to respond to this question.

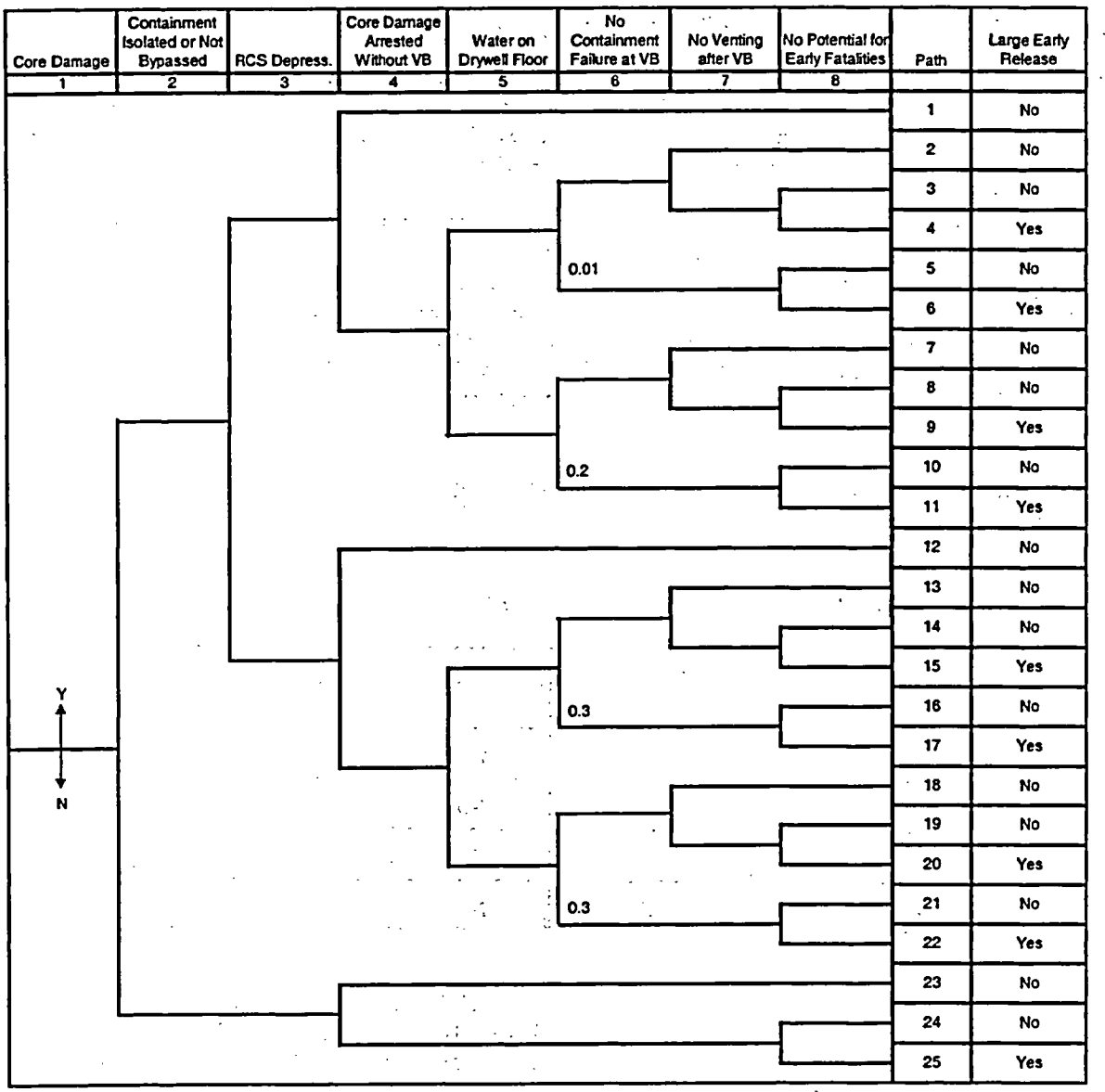

Figure 3.2 BWR Mark II Containments

Question 5: Water on the Pedestal or Drywell Floor?

Water in the pedestal will affect the likelihood of ex-vessel steam explosions in the pedestal and drain line (and downcomers, when located directly below the vessel). For this question, the top branch is the fraction of the remaining sequences (excluding sequences accounted for by previous questions) in which the pedestal is flooded, and the bottom branch is the fraction where the pedestal is not flooded.

Question 6: Containment Failure At Vessel Breach?

Depending on the answers to Questions 3 and 5, the containment failure probability is assigned (refer to Table 3-2). These failure probabilities implicitly account for the following phenomena: in-vessel steam explosions, ex-vessel steam explosions (in-pedestal and drain lines or downcomers), vessel blowdown, and direct heating. The likelihood of containment failure at vessel breach is about 0.3 if the RCS is at high pressure. This probability is relatively independent of whether or not the drywell floor is flooded. For transients with low RCS pressure at vessel breach, IPE data indicate that the conditional probability of early containment failure is approximately 0.2 if the drywell floor is dry and small (about 0.01) if the drywell floor is flooded. These failure probabilities do not include steel shell failure by melt impingement from core debris ejected from the pedestal cavity nor do they include failures in free standing steel shell containments from dynamic loads as a result of ex-vessel steam explosions in the suppression pool that can potentially occur if molten core debris exits the pedestal cavity and enters the pool through the downcomers (this latter failure mode was addressed by the Containment Loads Working Group and is discussed in Reference [9]). Plants that are vulnerable to these failures should modify the failure probabilities, taking into account the plant specific features that contribute to the vulnerability. The failure probabilities also do not consider long-term failure modes, such as core-concrete interactions or long-term drywell heatup. Bypass and events with containment failure or drywell venting have been accounted for previously. The branch probabilities for these questions were derived from References [5] and [10] and are given in Table 3-2. An alternative split fraction could be used for a particular plant provided sufficient justification is given.

Table 3-2 Mark II Conditional Containment Failure Probabilities

Path	Pressure	Water	Total Failure Probability
6	Lo	Yes	0.01
11	Lo	No	0.2
17	Hi	Yes	0.3
22	Hi	No	0.3

Plant-specific features that increase the containment failure probability such as melt impingement by core debris for the steel shelled containments should also be considered and not only those plant-specific features that mitigate severe accidents. For example, the pedestal cavity and the drywell floor are connected by drain lines that may be further connected to the reactor water clean up system outside the containment. The conditions under which this containment bypass path will be open should be identified. The contribution of this failure mode to the containment failure probability should be added to the probabilities in Table 3-2.

Question 7: No Venting After Vessel Breach?

This top event is similar to the question asked in the event tree for Mark I containments. The guidance provided under Question 7 in Section 3.1 should be used to respond to this question.

Question 8: No Potential for Early Fatalities?

This top event is similar to the question asked in the event tree for Mark I containments. The guidance provided under Question 8 in Section 3.1 should be used to respond to this question.

3.3 BWR Mark III Containment

Figure 3.3 provides an event tree which allows accident sequences to be allocated to one of two consequence categories (i.e., large early release or no large early release) for use with PRAs for BWRs with Mark III containments. The structure of the event tree is based on the premise that all early releases that are scrubbed by the suppression pool are sufficiently low that, by themselves, they will not result in individual early fatality risk. The event tree models different ways this scrubbing function of the suppression pool becomes ineffective. For each of the sequences that lead to the "Yes" endstate, the containment had failed in such a way the scrubbing function is not assured. Given that the containment had failed, no credit for the scrubbing of containment spray system should be given. It is assumed that the population will evacuate before substantial core concrete interaction releases take place, except for those initiating events that may impede evacuation. Each top event question in the event tree is discussed below. The approach prescribes only a single question concerning the likelihood of containment failure at vessel breach (i.e., Question 6). The split fraction for this question reflects a reasonable estimate of the likelihood of early containment failure for a Mark III containment. However, an alternative split fraction (less bounding) could be used for a particular plant provided sufficient justification is given.

If the containment structure is predicted to survive (i.e., upper branch of Questions 6 and 7) and the initiating event can impede evacuation of the close-in population, then the likelihood of long-term containment performance should be investigated by using the event tree in Section 3.4.

Mark III containments essentially have a double layer containment, with the drywell and suppression pool forming one layer and the outer containment structure forming the other layer. In the questions below, the term containment failure refers to containment *functional* failure and requires the following two conditions to *both* be met:

- The outer containment is breached and
- Either the drywell pressure boundary integrity is breached (e.g., by stuck-open drywell vacuum breaker, overpressure failure, or failure to isolate) or the suppression pool drains sufficiently to negate the scrubbing function of the suppression pool.

Question 1: Core Damage

This is the interface between the Level-1 PRA results and the simplified CETs. Refer to Chapter 1 for a discussion on this interface. The frequency and characteristics of the accident sequence under consideration are required.

Question 2: Containment Isolated or Not Bypassed?

This top event is similar to the question asked in the event tree for Mark I containments. The guidance provided under Question 2 in Section 3.1 indicates that a containment leak rate of about 100 percent containment volume per day is an approximate threshold beyond which the leak may become significant to LERF. However, in Mark III plants, the impact of suppression pool decontamination factors (DF) has to be taken into account when considering leakage from these containments. Conservatively, a DF of 10 has historically been used to represent the impact of pool scrubbing over the entire accident period. While this is extremely conservative for an "early release," incorporating this DF to determine the containment leakage criterion of importance to LERF implies a wetwell to environment leak rate of about 1000% containment volume per day.

3. Simplified Event Trees for BWRs

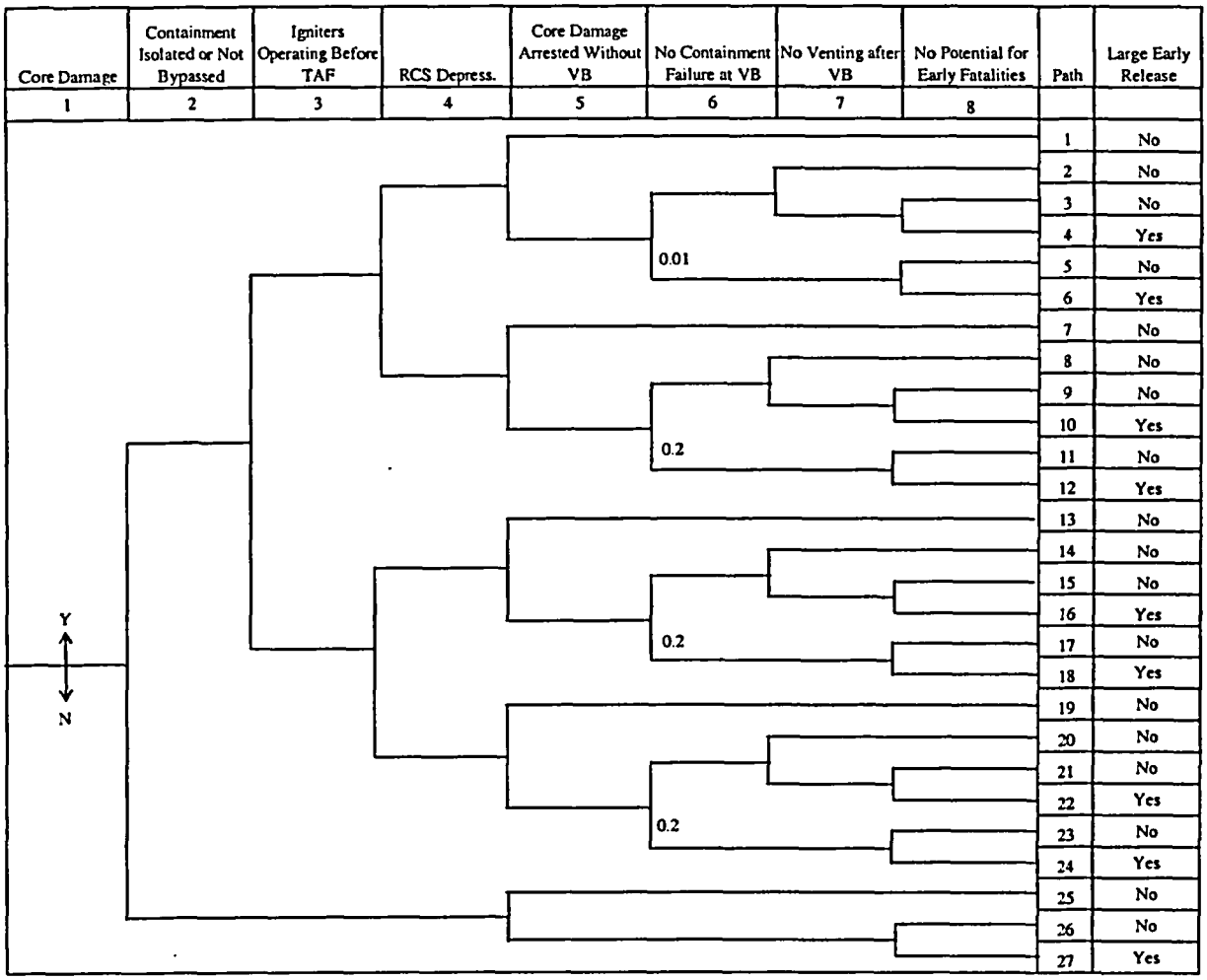

Figure 3.3 BWR Mark III Containments

Question 3: Hydrogen Igniters Operating Before Top of Active Fuel?

Mark III containment buildings are critically dependent on the availability of hydrogen igniters to control pressure loads resulting from hydrogen combustion involving both static and dynamic loads. The Mark III containment layout lends itself to build up of hydrogen concentrations. There is a significant probability of a hydrogen combustion event causing containment failure if the igniters are not operating before the level reaches the top of active fuel (TAF).

The information needed to address this question is generally not modeled in a Level-1 PRA. The igniters require ac power to operate and are usually started manually. In principle, a detailed fault tree could be developed for the igniter system and integrated into the Level-1 model. Without developing a fault tree, a way to quantify this question is to simply assume that the igniters are available as long as ac power is available. If a plant installed a dedicated power supply for the igniters, then the likelihood that the igniters would lose their power supply would be significantly reduced.

Question 4: RPV Depressurization?

This top event is similar to the question asked in the event tree for Mark I containments. The guidance provided under Question 3 in Section 3.1 should be used to respond to this question.

Question 5: Core Damage Arrested Without Vessel Breach?

This top event is similar to the question asked in the event tree for Mark I containments. The guidance provided under Question 4 in Section 3.1 should be used to respond to this question.

Question 6: Containment Failure Before or At VB?

Depending on the answer to Questions 3 and 4, the containment failure probability is assigned. These failure probabilities (refer to Table 3-3 below) implicitly account for the following phenomena: hydrogen burns before and at vessel failure, in-vessel steam explosions, ex-vessel steam explosions, vessel blowdown, and direct heating. They do not consider long-term failure modes, such as core-concrete interactions or long-term pedestal erosion. Bypass events have been accounted for previously. As discussed in NUREG-1765 [4], the accident sequences that contribute to LERF (that require failure of the drywell in addition to containment failure and/or bypass of the suppression pool) are sensitive to the pressure in the RCS at the time of vessel breach and the availability of hydrogen igniters that require AC power (i.e., station blackout vs. non-station blackout sequences). The branch probabilities for these questions are discussed in detail in [4] and are given in Table 3-3. An alternative split fraction could be used for a particular plant provided sufficient justification is given.

Table 3-3 Mark III Conditional Containment Failure Probabilities

Path	Igniters	Pressure	Total Failure Probability
6	Yes	Low	0.01
12	Yes	High	0.2
18	No	Low	0.2
24	No	High	0.2

Question 7: No Venting After Vessel Breach?

This top event is similar to the question asked in the event tree for Mark I containments. The guidance provided under Question 7 in Section 3.1 should be used to respond to this question.

Question 8: No Potential for Early Fatalities?

This top event is similar to the question asked in the event tree for Mark I containments. The guidance provided under Question 8 in Section 3.1 should be used to respond to this question.

3.4 BWR Late Containment Failure

If a late containment failure is predicted to occur for accidents where evacuation is not effective, e.g., seismic events and high winds, it is assumed that early fatalities are possible. The purpose of the CET in Figure 3.4 is to provide an estimate of the likelihood of late containment failure. The focus is on structure failure of the containment above grade. Penetration of the basemat by the core debris is a potential late failure mode but as the release occurs very late and below ground early fatalities are extremely unlikely even if evacuation is impeded. The CET should be used for accident sequences initiated by external events (i.e., seismic and high wind) that can impede evacuation of the close-in population. The fraction of these accident sequences that do not result in containment failure in the previous CET are processed through the CET in this section. The endstates of the late containment event tree represent whether or not the release is large enough to cause early fatalities.

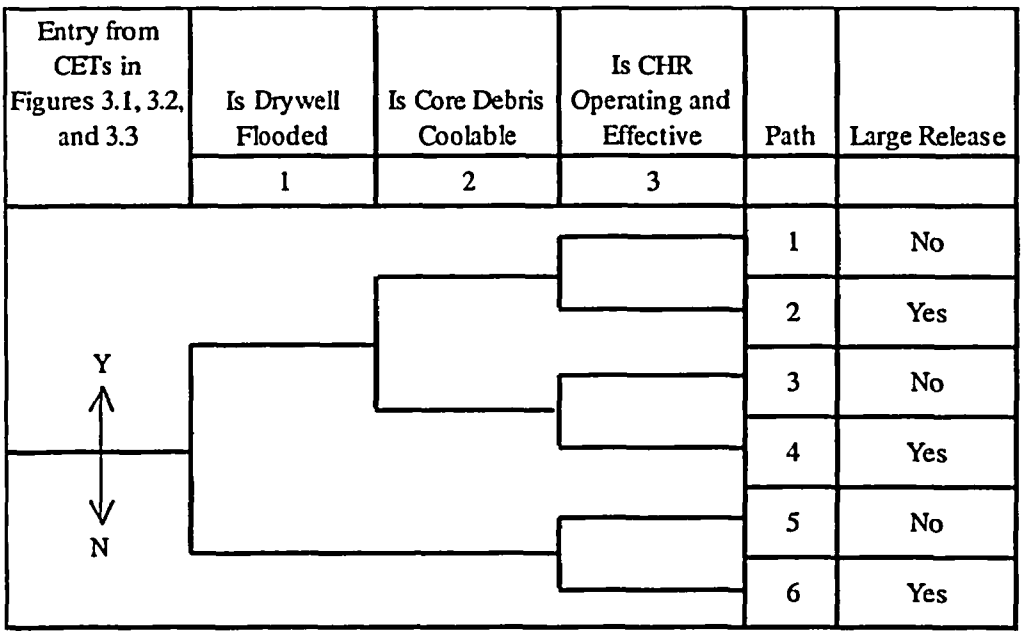

Figure 3.4 Late Containment Failure for BWRs

Question 1: Is Drywell Flooded?

It is important to know if the region under the reactor vessel is flooded. A flooded drywell floor could cool the core debris and prevent core-concrete interactions (coolable debris bed) and eliminate noncondensible gas release from this mechanism. The main source of containment pressurization is from steam if the debris bed is coolable. If the cavity is dry, extensive core-concrete interactions can occur resulting in significant release of noncondensible gases leading to high pressures and temperatures in containment. The question cannot usually be answered directly from a Level1 PRA. The containment layout and the accident sequence definitions need to be combined to assess the potential for a flooded cavity.

Question 2: Is Core Debris Coolable?

This question addresses the likelihood of coolability of the core debris released onto the drywell floor. Coolability of the core debris requires that the region under the vessel be flooded (positive response to Question 1) and that the molten core materials are fragmented into particles of sufficient size to form a coolable configuration. Debris bed coolability is an important issue because if the debris forms a coolable geometry, the only source for containment pressurization will be the generation of steam from boiloff of the overlying water. Under these circumstances, if containment heat removal systems are available (Question 3), then late containment failure would be prevented. Even in the absence of containment heat removal, pressurization from water boiloff is a relatively slow process and would result in very late containment failure allowing time for remedial actions.

There is, however, a significant likelihood that, even if a water supply is available, the core debris will not be coolable and, therefore, will attack the concrete basemat. Under these circumstances, noncondensible gases would be released in addition to steam and add to containment pressurization.

Formation of a coolable debris bed depends on several factors, such as the mode of contact between the core debris and water, the size distribution of the core debris particles, the depth of the debris bed, and the water pool. As a general rule,

unless the debris bed is calculated to be thin, both a coolable and noncoolable configuration should be considered for the purposes of CET quantification.

Question 3: Is CHR Operating and Effective?

This question addresses whether or not a CHR system, e.g., containment spray system, is available and effective a long time after vessel breach. A positive response implies that containment integrity will be maintained where as a negative response results in containment failure. The ability of a CHR system to operate effectively depends upon the containment environmental conditions, which in turn depend upon whether or not the core debris is flooded. Each possibility is therefore discussed below. An alternative means of preventing a large release is using wetwell venting, maintaining suppression pool cooling and makeup. If successful, this method of preventing a large release does not require water in the drywell, nor debris coolability.

Dry Core Debris

If the core debris is not flooded, it will generally not be coolable and Question 2 is irrelevant. Extensive CCI will occur and noncondensible gases, steam and radionuclides will be released to containment. This results in an extremely harsh environment and it is unlikely that failure of a Mark I containment can be prevented even if a CHR system is available. If spray operation can be restored and a coolable debris bed achieved, then perhaps containment failure can be prevented.

Flooded Core Debris

If the core debris is flooded, then the response to Question 2 (core debris coolability) is very important to CET quantification. Each possibility is discussed below.

Core debris coolable. If the core debris is coolable, CCI does not occur and all of the decay heat goes into boiling water. If the containment heat removal systems are operating, then late containment failure by overpressurization will be prevented. If the containment heat removal systems are not operating, then containment failure will eventually occur unless remedial actions are taken.

Core debris uncoolable. If the core debris is not coolable, CCI will occur and the impact of noncondensible will have to be taken into account for CET quantification. Noncondensible gas generation can cause Mark I containment to overpressurize because of their relatively small volumes even if a CHR is operating.

3.5 References

1. "Review of Light Water Reactor Regulatory Requirements," NUREG/CR-4330, April 1986.

2. "Performance-Based Containment Leak-Test Program," NUREG-1493, January 1995.

3. "Risk Importance of Containment and Related ESF System Performance Requirements," NUREG/CR-6418, November 1998.

4. USNRC, "Basis Document for large Early Release Frequency (LERF) Significance Determination Process (SDP), Inspection Findings that May Affect LERF," NUREG-1765, December 2002.

5. USNRC, "Individual Plant Examination Program: Perspectives on Reactor Safety and Plant Performance," NUREG-1560, November 1996.

6. Theofanous, T. G., Amarasooriga, W. H., Yan, H., and Ratnam, U., "The Probability of Liner Failure in a Mark I Containment," NUREG/CR-5423, August 1991.

7. Theofanous, T. G., et al., "The Probability of Mark I Containment Failure by Melt Attack of the Liner," NUREG/CR-6025, November 1993.

8. H. Esmaili, M. Khatib-Rahbar and Z. Yuan, "The Probability of High Pressure Melt Ejection-Induced Direct Containment Heating Failure in Boiling Water Reactors with Mark I Containment," ERI/NRC 03-204, November 2003.

9. USNRC, "Estimates of Early Containment Loads from Core Melt Accidents," Draft NUREG-1079, December 1985. Copies are available for inspection or copying for a fee from the NRC Public Document Room at 2120 L Street NW., Washington, DC; the PDR's mailing address is Mail Stop LL-6, Washington, DC 20555; telephone (202) 634-3273; fax (202) 634-3343.

10. Payne, A.C., et al., "Integrated Risk Assessment for the LaSalle Unit 2 Nuclear Power Plant: Phenomenology and Risk Uncertainty Evaluation Program (PRUEP)," NUREG/CR-5305, SAND90-2765, 3 volumes, 1990.

4. SIMPLIFIED EVENT TREES DURING SHUTDOWN

In this chapter, simplified event trees are developed for PWRs and BWRs during shutdown. The approach described in Chapter 1 has been followed with emphasis on minimizing the size of the event trees and the level of prescription provided. Guidance is provided for each question (or top event) in the event trees. The guidance is intended to apply to all initiating events during shutdown.

The simplified approach that is developed below is not meant to provide a detailed picture of the risk through the entire low power and shutdown period from reactor scram through hot shutdown, followed by cold shutdown, refueling (in case of a scheduled, refueling outage), and then back to startup. A complete or comprehensive description of the plant operational states, the decay heat levels, and the temperature and pressure in the reactor coolant system as the plant goes through these modes is provided in Reference [1] for PWRs and Reference [2] for BWRs.

The simplified approach developed below is focused on LERF and applies to the period after the plant is placed on the residual heat removal (RHR) system to remove decay heat. Before the RHR plant condition is entered, decay heat is removed through the steam generators and the RCS configuration is similar to that of power operation. Hence the risk of a large early release before the RHR system is placed in service can be represented, at least to a first approximation, by the full power event trees described in Chapters 2 and 3 above, with recognition of technical specifications in this condition may not be identical to those of power operation. For example, containment inerting is not required in Modes other than Mode 1 for BWR/4 plants, and hydrogen igniters are only required in Modes 1 and 2 for BWR/6 plants. Therefore, without containment inerting, the answer to Question 6 of Figures 3.1 and 3.2 should be yes; and without hydrogen igniters, the lower branch under Question 3 of Figures 3.3 and 2.2 has to be followed.

4.1 Simplified Containment Event Trees for PWRs

In this section, simplified event trees at shutdown are developed for PWRs. The approach is based on the template for a generic PWR [3]. Based on Reference [3], the shutdown period is divided into time windows (TW) and plant operating states (POS) as shown in Figure 4.1.

Figure 4.1 shows the applicable time windows and POS groups for a generic PWR. POS 1 in TW-E starts with the initiation of RHR with the reactor in the hot shutdown mode and extends into the cold shutdown mode to the start of draining. The RHR entry condition occurs around 345 psig (Reference [1]). POS 2 in TW-E starts in the cold shutdown mode when draining of the reactor inventory begins. Mid-loop operations are carried out in this state. POS 2 in TW-E ends with the level at 23' above the reactor vessel flange. Based on the sequence of operations at shutdown during a refueling outage, containment could be open during portions of POS 1/TW-E in cold shutdown. Containment may also be open in POS 2/TW-E. In POS 3, containment may be open except in the period when the fuel offload occurs.

4.1.1 PWR Large Dry and Sub-atmospheric Containment Shutdown Event Tree

Figure 4.2 shows an event tree for PWRs with large dry or sub-atmospheric containment that allows determination if a CD sequence would result in a large early release with potential of early fatality. Similar to the full power CET, for those initiating events with the potential of impeding evacuation, a sequence in which the containment did not fail at vessel breach has to be transferred to the late containment failure event tree, i.e., Figure 2.3.

Question 1: Core Damage

This is the interface between the Level-1 PRA results and the simplified containment event trees (CETs). Refer to Chapter 1 for a discussion on this interface. The frequency and characteristics of the accident sequence under consideration are required.

4. Simplified Event Trees During Shutdown

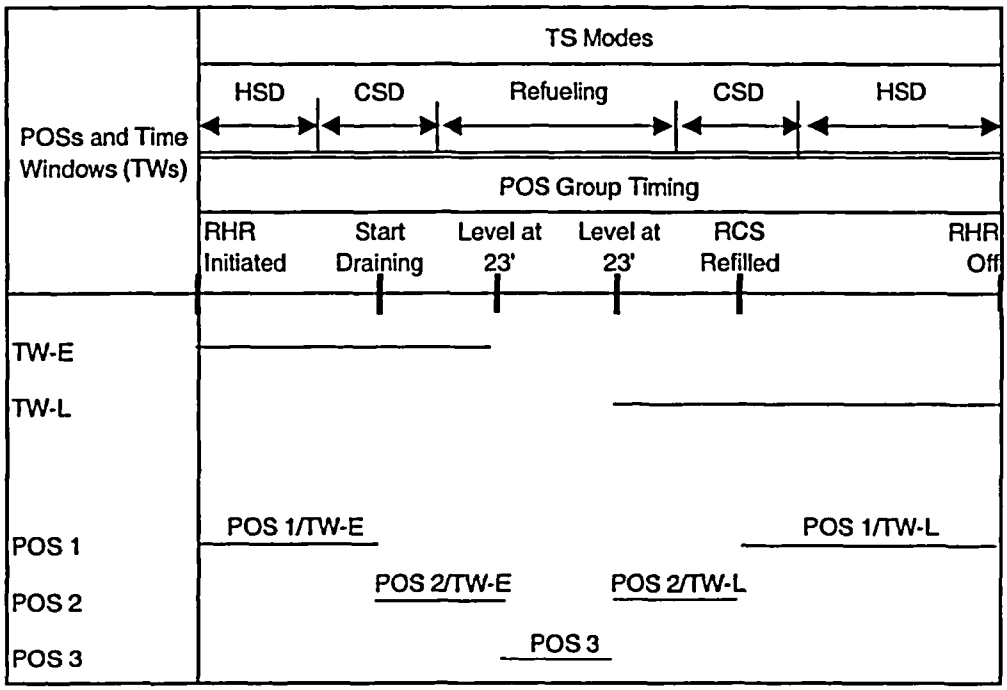

TS = Technical Specifications; HSD = Hot Shutdown; CSD = Cold Shutdown

Figure 4.1 POSs and TWs for PWRs at Shutdown

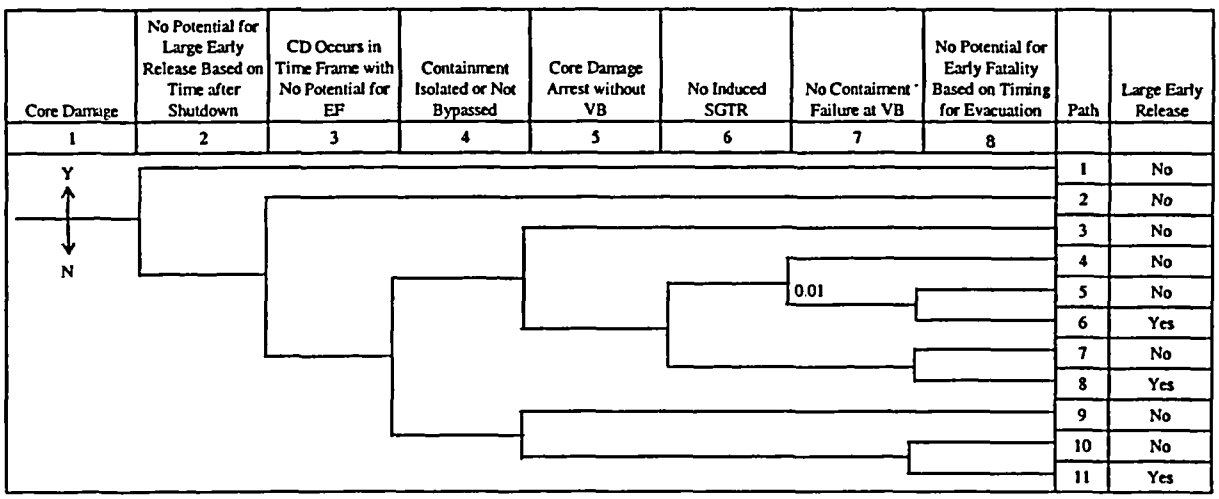

Figure 4.2 PWR Large Dry and Sub-atmospheric Containment Event Tree

Question 2: No potential for large early release based on time after shutdown

For accidents that occur a certain time, i.e., number of days, after shutdown, it is possible that the core inventory may have decayed to a level low enough such that releases from an accident lead to offsite doses that are below the threshold for an early fatality. This cut-off time for LERF after shutdown will, in general, depend on a number of plant, site, and

accident specific factors. These factors include: (1) plant size and burnup, i.e., factors that impact the magnitude of the total core inventory at scram, (2) site weather factors affecting transport and dilution of the release, (3) accident source terms such as fractions of the core inventory of different radionuclides released in the accident, especially radionuclides such as iodine and tellurium that are relatively volatile and have a large impact on early health effects, (4) the timing and duration of the release, and (5) the energy and height of the release. Since a large number of factors affect the calculation of LERF, only some very general guidance on the LERF cut-off time can be provided here. For many releases characteristic of severe accidents, 8 days after shutdown is a reasonably conservative estimate of the LERF cut-off time; however, if releases of very large source terms are involved the time could conceivably extend over the entire outage.* Alternatively, if it is desired to take credit for a LERF cut-off time of less than 8 days, justification should be provided through an appropriate Level 3 probabilistic consequence calculation. It is recognized in this context that the recent practice of the nuclear power industry has been that the duration of refueling outages is becoming shorter.

Question 3: Does Core Damage Occur in a Time Frame with a Potential for Early Fatality?

This question relates to the type of core damage accident that occurs. CD accident sequences that occur within a time frame such that evacuation of the close-in population is possible are assumed not to have the potential for a large early release. The time available for evacuation is the time from declaration of a general emergency** to the onset of core damage. For the purpose of screening core damage accident sequences, no credit is given for evacuation beyond the onset of core damage, regardless of the initial status of containment isolation. CD accident sequences that occur in a time frame such that an effective evacuation of the close-in population is not possible have the potential for a large early release. Due to the fact that human errors are often important contributors to core damage accidents during shutdown, and may impact evacuation timeliness, the potential of delayed evacuation has to be taken into consideration. In particular, if core damage was caused by diagnostic errors, no credit for evacuation should be taken.

---

*This conclusion is based on limited screening-type calculations of centerline doses at the site boundary as a function of time after shutdown using the NRC sponsored MACCS code [4]. These calculations assume a reactor inventory corresponding to the highest power rating of 3800 MWth, site weather data for the 80th percentile weather site defined in NUREG/CR-6295[5], and the release fractions of the source term groups (STGs) from the Surry and Grand Gulf shutdown PRAs [1, 2]. No evacuation or other mitigative measures are credited in the calculations. The mean centerline doses are compared with the early fatality dose thresholds for the target organs (lungs and red marrow) in the MACCS early fatality model to estimate the LERF cut-off time. The LERF cut-off time is taken to be when the calculated mean centerline dose falls below the threshold dose. Below the threshold dose, the release will not contribute to the risk of early fatality. The results indicate that source terms which involve a release of about 10% or less of the core iodine inventory (10% iodine releases are associated with early fatalities in accidents that occur at full-power), offsite doses generally fall below the early fatality threshold approximately 8 days or less after shutdown. Other STGs can fall below the threshold dose in 8 days, but generally have longer times after shutdown, some of which have times exceeding 32 days. (However, of those releases from the Grand Gulf shutdown PRA which resulted in doses greater than the threshold at times equal to or exceeding 8 days, many have warning times that are greater than about 4 hours that could lead to their exclusion under Question 3). An uncertainty associated with the source term that affects the LERF cut-off time is the potential for increased releases of ruthenium (Ru) that does not decay over the length of the outage and also has an impact on early fatality doses. Air ingress into the fuel could increase the release of Ru. This phenomenon is a subject of research.

**Draft Regulatory Guide DG-1075, "Emergency Planning and Preparedness for Nuclear Power Reactors," provides related information on declaration of a general emergency.

Seismic Events and High Wind

For these initiating events, it is possible that effective warning and evacuation may be precluded due to the disruption of warning systems and evacuation paths. These types of initiating events should in general be allocated to the potential for early fatality branch on the event tree.

Question 4: Containment isolated or not bypassed

This question relates to the status of the containment at core damage. During shutdown, there are two reasons the containment may not be isolated, i.e., containment may be opened when cold shutdown is reached, and containment isolation may have failed or containment is bypassed. The former reason is unique to shutdown conditions. The latter is similar to that discussed for power operation, can be accounted for following the guidance developed for power operation, but may become more likely due to lack of isolation requirements during shutdown. For example, if a single isolation valve is used during shutdown instead of two isolation valves used during power operation, then the increased likelihood of isolation failure has to be accounted for.

For shutdown conditions, containment isolated means that the containment was initially isolated or can be re-closed before core damage such that it will hold design pressure. The fraction of time that the containment is open due to either a removed equipment hatch or an open containment penetration, should be evaluated using plant operating experience or information in relevant procedures. Any credit given to closing the containment prior to core damage should be supported by procedures and operator training. Guidance on containment times can be found in Reference [6].

In some shutdown conditions, containment closure may be maintained by barriers with lower pressure capabilities, e.g., use of temporary hatch in reduced inventory conditions. In order to credit the lower pressure capability in delaying and reducing releases, technical justification should be provided such as by performing a MELCOR or MAAP calculation and a source terms evaluation.

The Level-1 analysis may not have used containment status in defining the POSs. Therefore, it may be necessary to determine the fraction of the time in the POS the containment is open for each of the core damage sequences/cutsets.

In a shutdown condition with the containment closed, the RHR system may become a potential containment bypass pathway during a severe accident. The RHR relief valve may open and stick open during the accident, and the RHR suction MOVs have to be closed to prevent release from occurring.

Seismic Events and High Wind

For these initiating events, it is possible that effective warning and evacuation may be precluded due to the disruption of warning systems and evacuation paths. These types of initiating events should in general be allocated to the potential for early fatality branch on the event tree. In order to place a sequence on the branch labeled no potential for early fatalities, a licensee should provide information, specific to the sequence, concerning when a general emergency would be declared and whether or not the population could in fact be evacuated.

Question 5: Core damage arrest without vessel breach

This question is the same as that of power operation. Follow the guidance provided for question 4 of Section 2.1.

Question 6: Induced steam generator tube rupture

Induced SGTR could lead to a containment bypass at shutdown, when the containment is initially closed, i.e., early in POS 1 before refueling and late in POS 1 after refueling. Similar to power operation, two types of ISGTR are possible during shutdown, pressure induced and thermally induced. The reactor coolant system boundary may be closed at times during shutdown operation for use of the steam generators. This condition could exist during normal shutdown operation, e.g., in POS 1, as well as the result of trying to establish reflux cooling. If the reactor coolant system boundary was closed for use of the SGs, primary side pressure could be limited by such considerations as the design pressure of the RHR system, the lower PORV set point, or operator actions. The discussion for Section 2.1, Question 5 should be consulted for important phenomenological considerations.

Question 7: No containment failure at vessel breach

If the containment is closed at shutdown, there is a small conditional probability of early failure of 0.01. This value is based on the response to Question 6 in Figure 2.1 of Chapter 2 for low RCS pressure sequences. High reactor pressure is not expected to occur due to lowered PORV set point at shutdown, removal of pressurizer safety valves, and possibly induced failures of hot leg and surge line. The Surry mid-loop study did not identify any high pressure scenarios in Level-2 analysis [1]. In the rare situations if a high pressure scenario is found, the high pressure probabilities estimated for full power should be used. For those initiating events which may impede evacuation, i.e., seismic events and high winds, a transfer from the upper branch of this question to the late containment failure event tree, i.e., Figure 2.3, has to be followed.

Question 8: No potential for early fatality based on timing for evacuation

This question addresses whether or not early fatalities are likely given a loss of containment integrity. The potential for early fatalities depends on the magnitude and timing of the radionuclide release. The magnitude of the release is important because there is a threshold below which the doses from the early exposure pathways will be unlikely to cause an early fatality, and is addressed by question 2. The threshold is discussed in more detail in Appendix A to this report. The timing of release is also important because of radionuclide decay and because of its relation to the time required for evacuation of the close-in population around a nuclear power plant. It is addressed by this question.

Accident sequences that feed into this question have a flow path out of containment that is sufficiently large so that early health effects are possible, i.e., negative responses to Questions 4, 6, and 7. In order to respond to this question, the time from the declaration of a general emergency to the time of the start of the release has to be determined and compared to the time required to effectively warn and evacuate the population in the vicinity of the plant. In some accident sequences, containment failure occurs hours after the declaration of a general emergency giving time for evacuation of the population. However, for other accident sequences loss of containment integrity occurs prior to or closely after the start of core damage allowing relatively short times for evacuation. Due to the fact that human errors are often important contributors to core damage accidents during shutdown and may impact evacuation timeliness, the potential of delayed evacuation has to be taken into consideration. In particular, if core damage was caused by diagnoses errors, no credit for evacuation should be taken.

Seismic Events and High Wind

For some initiating events, it is possible that effective warning and evacuation may be precluded due to the disruption of warning systems and evacuation paths. These types of initiating events should in general be allocated to the potential for early fatality branch on the event tree. In order to place a sequence on the branch labeled no potential for early fatalities, a licensee should provide information, specific to the sequence, concerning when a general emergency would be declared and whether or not the population could in fact be evacuated.

4.1.2 PWR Ice Condenser Containment Shutdown Event Tree

Figure 4.3 shows an event tree for PWRs with an ice condenser containment that allows determination if CD sequences would result in a large early release with potential of early fatality. Similar to the full power CET, for those initiating events with the potential of impeding evacuation, a sequence in which the containment did not fail at vessel breach has to be transferred to the late containment failure event tree, i.e., Figure 2.3.

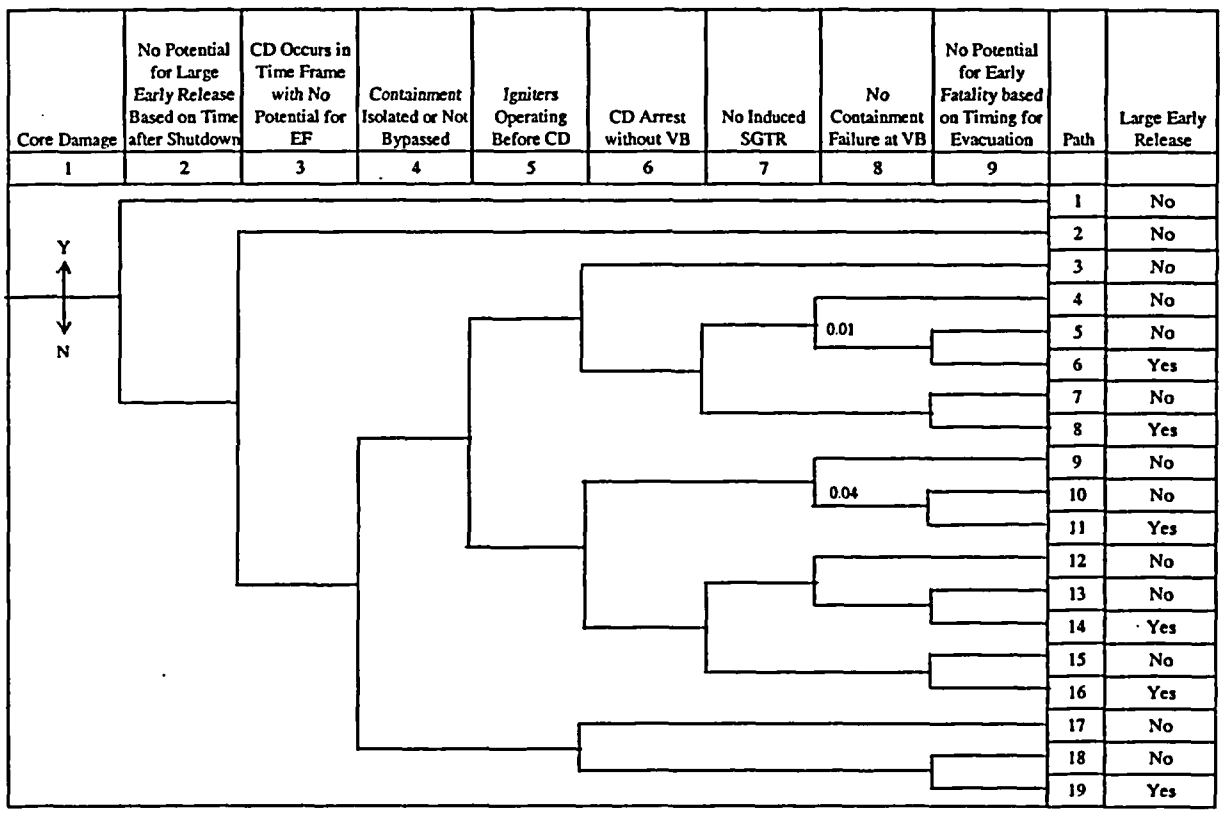

Figure 4.3 PWR Ice Condenser Containment Event Tree

Question 1: Core Damage

This is the interface between the Level-I PRA results and the simplified containment event trees (CETs). Refer to Chapter 1 for a discussion on this interface. The frequency and characteristics of the accident sequence under consideration are required.

Question 2: No potential for large early release based on time after shutdown

This question is identical to the same question of a PWR with a large dry or sub-atmospheric containment. Follow the guidance provided in Section 4.1.1.

Question 3: Does Core Damage Occur in a Time Frame with a Potential for Early Fatality?

This question is identical tot he same question of a PWR with a large dry or sub-atmospheric containment. Follow the guidance provided in Section 4.1.1.

Question 4: Containment isolated or not bypassed

This question is identical to the same question of a PWR with a large dry or sub-atmospheric containment. Follow the guidance provided in Section 4.1.1.

Question 5: Igniters operating before core damage

For PWR ice condenser plants, with containment closed, there are no technical specifications for the hydrogen igniter system to be operable once shutdown is entered. The operability of the igniter system has a strong influence on the conditional probability of containment failure as discussed in Section 2.2.

Question 6: Core damage arrest without vessel breach

This question is identical to the same question of a PWR with a large dry or sub-atmospheric containment. Followed the guidance provided in Section 4.1.1.

Question 7: Induced steam generator tube rupture

This question is identical to the same question of a PWR with a large dry or sub-atmospheric containment. Followed the guidance provided in Section 4.1.1.

Question 8: No containment failure at vessel breach

This question is the same as the same question of power operation, i.e., Question 7 of Figure 2.2. Follow the guidance provided for the same question in Section 2.2. The probabilities of containment failure are based on the response to the low RCS pressure sequences of power operation.

Question 9: No potential for early fatality based on timing for evacuation

This question is identical to the same question of a PWR with a large dry or sub-atmospheric containment. Followed the guidance provided in Section 4.1.1.

4.2 Simplified Containment Event Trees for BWRs

In this section, simplified event trees at shutdown are developed for BWRs. The approach is based on the template for a generic BWR [7]. Based on Reference [7], the shutdown period is divided into time windows and plant operating states as shown in Figure 4.4 below. TW-E is defined to represent the time before POS 3 is entered. The reactor is either in POS 1 or POS 2 and the decay heat is relatively high. The late time window, TW-L is defined to represent the time after POS 3. The reactor is either in POS 1or 2 and the decay heat is relatively low.

Figure 4.4 shows the applicable time windows and POS groups for a generic BWR as defined in the template in Reference [7]. POS 1 in TW-E starts with RHR initiation and RCS pressure reduced below 135 psig with the MSIVs closed. POS 1 extends from Mode 3 in hot shutdown through the end of cold shutdown (Mode 4). POS 2 in TW-E starts with the detension of the drywell head and removal of the RPV head and extends into the refueling mode until the RCS level is at 23' above the vessel flange. POS 3 starts when the RCS level is at 23' above the vessel flange and extends until the start of POS 2 in TW-L as shown in Figure 4.4. A very large amount of coolant inventory is available in POS 3 which occurs during Mode 5.

4. Simplified Event Trees During Shutdown

Once the cold shutdown condition is entered, the containment may be open. Also, there is no technical specification requirement for the containment to be inerted in cold shutdown. In the small volume Mark I and II plants, inerting plays an important role in reducing the risk of containment failure from deflagration/detonation of hydrogen evolved in a core damage accident.

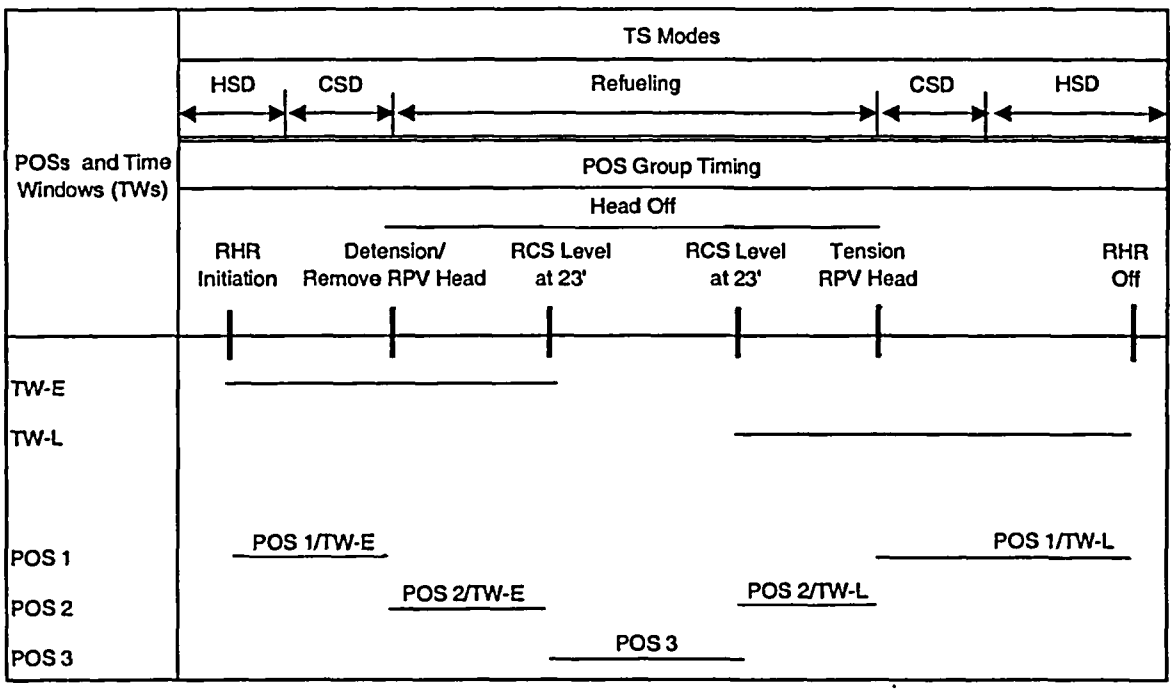

TS = Technical Specifications; HSD = Hot Shutdown, CSD = Cold Shutdown

Figure 4.4 POSs and TWs for BWRs at Shutdown

4.2.1 BWR Mark I and II Containment Shutdown Event Tree

Figure 4.5 shows an event tree for BWR Mark I and II plants that allows determination if a CD sequence would result in a large early release with potential of early fatality. Similar to the full power CETs, for those initiating events with the potential of impeding evacuation, a sequence in which the containment did not fail at vessel breach has to be transferred to the late containment failure event tree, i.e., Figure 3.4.

Question 1: Core Damage

This is the interface between the Level-I PRA results and the simplified containment event trees (CETs). Refer to Chapter 1 for a discussion on this interface. The frequency and characteristics of the accident sequence under consideration are required.

4. Simplified Event Trees During Shutdown

Question 2: No potential for large early release based on time after shutdown

This question is identical to the same question of a PWR with a large dry or sub-atmospheric containment. Follow the guidance provided in Section 4.1.1.

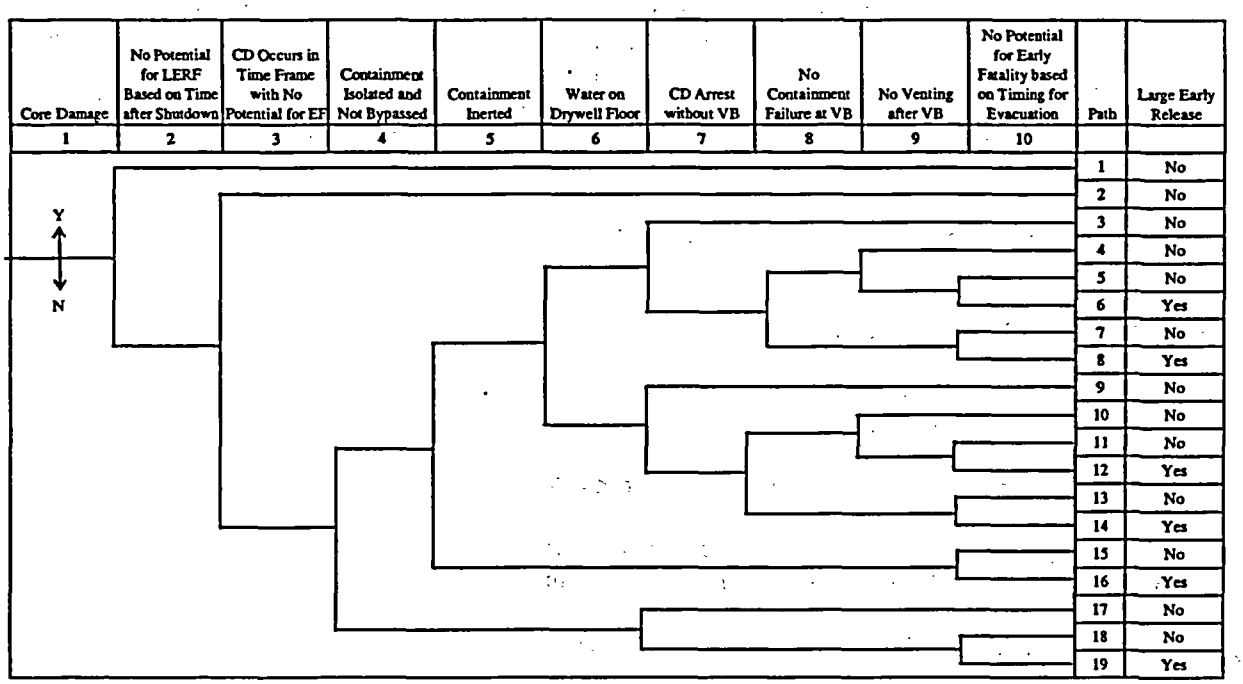

Figure 4.5 BWR Mark I and II Containment Event Tree

Question 3: *Does Core Damage Occur in a Time Frame with a Potential for Early Fatality?*

This question is identical tot he same question of a PWR with a large dry or sub-atmospheric containment. Follow the guidance provided in Section 4.1.1.

Question 4: Containment isolated or not bypassed

This question relates to the status of the containment at core damage. During shutdown, there are two possible reasons the containment may not be isolated, i.e., containment may be opened when cold shutdown is reached, and containment isolation may have failed or containment is bypassed. The latter reason is the same as that discussed for power operation, and the guidance of Chapter 3 should be used. The former reason is discussed here.

Containment closed during shutdown means that the containment was initially closed or can be re-closed before core damage such that it will hold design pressure. Containment open means that it was initially open and cannot be re-closed such that it will hold design pressure. If the containment is not closed, then a large release is expected with a potential for early fatality. One consideration here is whether the release will be scrubbed by the suppression pool. This depends on the containment configuration during the POS in which the accident occurs. If pool bypass paths exist, pool scrubbing will not occur.

Question 5: Is the Containment Inerted?

For BWR Mark I and Mark II plants, there is no standard technical specification requirement for the plant to inert the containment once cold shutdown is entered as there is during full power operation. Core damage accident sequences at shutdown in which the containment is not inert will lead to loss of containment function with a conditional containment failure probability of 1.0 due to hydrogen combustion events even if the containment is closed. (See Reference [8] for a discussion of containment failures from hydrogen combustion events in various types of containment). An additional assumption that was made when allocating a probability of 1.0 to a large release is that containment failure occurs in the drywell so that the suppression pool is by-passed and the release is not scrubbed. If containment failure is predicted to occur in the wetwell then the release would be scrubbed by the pool, and it would not be large. Under these circumstances quantification of the containment event tree should be changed accordingly.

If the containment is inert the possibility of early failure from hydrogen combustion is eliminated. However early failure can still occur from a variety of mechanisms as discussed in Chapter 3.

Question 6: Is the Drywell Floor Flooded?

This question involves the status of the drywell floor, whether it is dry or flooded. Follow the guidance provided for power operation, i.e., Question 5 of Section 3.1.

Question 7: Core Damage Arrest without Vessel breach (VB)

This question is similar to the same question asked in the event tree for power operation. The guidance provided for Question 4 of Figures 3.1 and 3.2 should be used to respond to this question.

Question 8: Containment Failure at Vessel Breach (VB)?

The likelihood of containment failure depends on the pressure in the RCS at the time of vessel melt-through and whether or not the drywell floor is flooded. The pressure is assumed to be low at shutdown so that flooding of the drywell floor is one major consideration related to early failure. Follow the guidance specified for power operation to determine the probability of containment failure. The conditional probability specified in Tables 3-1 and 3-2 for low RCS pressure should be used. If the RCS is initially closed, i.e., all the SRVs closed, and is not manually depressurized, then the pressure could be as high as that of full power accidents and the high pressure probabilities of the tables should b used. Justification should be provided for crediting manual depressurization.

Question 9: No Venting after Vessel Breach

This question is similar to the same question asked in the event tree for power operation. The guidance provided for power operation should be used to answer this question.

Question 10: No potential for early fatality based on timing for evacuation

This question is the same as the same question of the full power event tree. The guidance provided for the same question of full power event tree should be followed.

4.2.2 BWR Mark III Containment Shutdown Event Tree

Figure 4.6 shows an event tree for BWR Mark III plants that allows determination if a CD sequence would result in a large early release with potential of early fatality. Similar to the full power CET, for those initiating events with the potential of impeding evacuation, a sequence in which the containment did not fail at vessel breach has to be transferred to the late containment failure event tree, i.e., Figure 3.4.

4. Simplified Event Trees During Shutdown

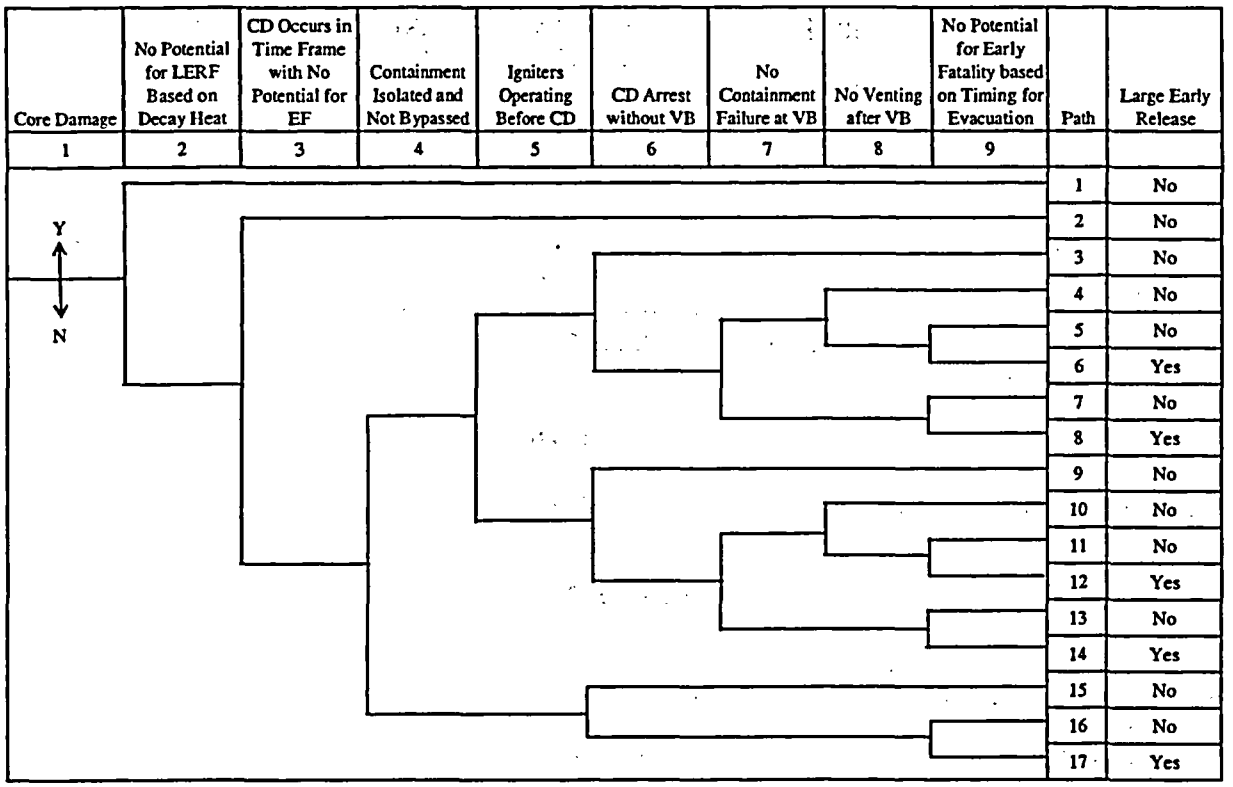

Figure 4.6 BWR Mark III Containment Event Tree

Question 1: Core Damage

This is the interface between the Level-I PRA results and the simplified containment event trees (CETs). Refer to Chapter 1 for a discussion on this interface. The frequency and characteristics of the accident sequence under consideration are required.

Question 2: No potential for large early release based on time after shutdown

For full power accidents, there is always potential for large early release, i.e., the answer is always negative. For shutdown accidents occurring after certainty days after shutdown (to be determined by MACCS calculations), the core inventory has decayed to a level that can no longer cause early fatalities. The split fraction for this question has to be determined by the core damage sequence/cutset, based on the fraction of time the core damage occurs when early fatality is possible. The Level-1 analysis may not have defined the POSs in the same way the POSs are defined in this simplified Level-2 analysis. But the information needed to determine the split fraction should be available.

Question 3: Does Core Damage Occur in a Time Frame with a Potential for Early Fatality?

This question is identical tot he same question of a PWR with a large dry or sub-atmospheric containment. Follow the guidance provided in Section 4.1.1.

Question 4: Containment isolated or not bypassed

This question relates to the status of the containment at core damage. During shutdown, there are two possible reasons the containment may not be isolated, i.e., containment may be opened when cold shutdown is reached, and containment

isolation may have failed or containment is bypassed. The former reason is the same as that discussed in Figure 4.5. If the containment is open (both drywell and suppression pool are breached and/or bypassed and the outer containment, e.g., equipment hatch, is open), then a large release is expected with a potential for early fatality. The guidance provided under Question 4 of Section 4.2.1 should be followed. The latter reason is the same as that discussed for power operation, and the guidance of Chapter 3 should be used.

Question 5: Igniters Operating Before Top of Active Fuel

BWR with Mark III containments are also vulnerable to hydrogen combustion events especially since there are no requirements for the igniter system to be operable at shutdown. If the igniters are not operable, there is a potential for a large early release and the conditional probability of containment failure leading to a large early release is set equal to 0.2 (as at full power), based on the information provided in Chapter 3. If the igniters can be recovered by operator action and are made operable, there is no large release.

Question 6: Core Damage Arrest without Vessel breach (VB)

This question is similar to the same question asked in the event tree for power operation. The guidance provided for Question 6 of Figure 3.3 should be used to respond to this question.

Question 7: Containment Failure at Vessel Breach (VB)?

The likelihood of containment failure depends on the pressure in the RCS at the time of vessel melt-through and whether or not the drywell floor is flooded. The pressure is assumed to be low at shutdown. The conditional probability specified in Tables 3-3 with low RCS pressure should be used, i.e. 0.01 if the igniters operated successfully to reduce the likelihood of build up of hydrogen, and 0.2 if the igniters are not successful. If the RCS is initially closed, i.e., all the SRVs closed, and is not manually depressurized, then the pressure could be as high as that of full power accidents, and the high pressure probabilities of the table should be used. Justification should be provided for crediting manual depressurization.

Question 8: No Venting after Vessel Breach

This question is similar to the same question asked in the event tree for power operation. The guidance provided for power operation should be used to answer this question.

Question 9: No potential for early fatality based on timing for evacuation

This question is the same as the same question of the full power event tree. The guidance provided for the same question of full power event tree should be followed.

4.3 References

1. Chu, T-L., et al., "Evaluation of Potential Severe Accidents During Low Power and Shutdown Operations at Surry, Unit 1," NUREG/CR-6144, 1994.

2. Whitehead, D. W., et al., "Evaluation of Potential Severe Accidents During Low Power and Shutdown Operations at Grand Gulf, Unit 1," NUREG/CR-6143, 1995.

3. US NRC, "Phase 2 Significance Determination Process Template for a PWR During Shutdown," Attachment 2 to Appendix G of Inspection Manual Chapter 0609, NRC, Office of Nuclear Reactor Regulation, May 25, 2004.

4. Chanin, D., Young, M. L., "Code Manual for MACCS2," NUREG/CR-6613 Vols. 1 and 2, SAND97-0594, May 1998.

4. Simplified Event Trees During Shutdown

5. Davis, R. E., A. L. Hanson, and V. Mubayi, "Reassessment of Selected Factors Affecting Siting of Nuclear Power Plants," NUREG/CR-6295, BNL-NUREG-52442, Brookhaven National Laboratory, February 1997.

6. US NRC, "Loss of Decay Heat Removal," Generic Letter No. 88-17, October 17, 1988.

7. US NRC, "Phase 2 Significance Determination Process Template for a BWR During Shutdown," Attachment 3 to Appendix G of Inspection Manual Chapter 0609, NRC, Office of Nuclear Reactor Regulation, May 25, 2004.

8. Camp, Allen L., et al., "Light Water Reactor Hydrogen Manual," NUREG/CR-2726, SAND82-1137, Sandia National Laboratories, August 1983.

APPENDIX A
DEFINITION AND POTENTIAL SPECIFICATION OF LERF

A.1 Introduction

Draft Regulatory Guide DG-1061 [1] adopts core damage frequency (CDF) and large early release frequency (LERF) as "suitable metrics for making risk-informed regulatory decisions." LERF is "defined as the frequency of those accidents leading to significant, unmitigated releases from containment in a time frame prior to effective evacuation of the close-in population such that there is a potential for early health effects." It is stated in DG-1061 that LERF is used as a "surrogate for the early fatality QHO (quantitative health objective)."

The objective of using LERF (and CDF) is to evaluate, from a risk perspective, the impact on the current licensing basis (CLB) of any changes (in plant procedures, etc.) Proposed by a licensee. Since most plants have not performed Level 3 PRAs, it is difficult to address the significance of proposed changes in terms of their impact on the Safety Goals (e.g., the early fatality QHO) directly. However, since most plants have undertaken a Level-2 PRA (for example, in the IPE program), it is, in principle, more feasible to obtain information regarding the timing and magnitude of various types of potential releases from severe accidents which are significant for the early fatality calculation.

The early fatality QHO defined in the NRC Safety Goal Policy [2] is:

> "The risk to an average individual in the vicinity of a nuclear power plant of prompt fatalities that might result from reactor accidents should not exceed one-tenth of one percent (0.1 percent) of the sum of prompt fatality risks resulting from other accidents to which members of the U.S. population are generally exposed."

For purposes of comparison with the results of probabilistic risk assessments (PRAs), this QHO has been translated into a numerical objective as follows:

(1) *Early Fatalities QHO*: The individual risk of an early fatality from all "other accidents to which members of the U.S. population are generally exposed," such as fatal automobile accidents, etc. is about 5×10^{-4} per year. One-tenth of one percent of this figure implies that the individual risk of prompt fatality from a reactor accident should be less than 5×10^{-7} per year. The "vicinity" of a nuclear power plant is understood to be a distance extending to 1 mile from the reactor exclusion area boundary. The "average" individual risk is determined by dividing the number of prompt fatalities to 1 mile due to all accidents, weighted by the frequency of each accident, by the total population to 1 mile from the plant and summing over all accidents.

The individual risk of early fatality (IREF) embodied in the early fatality QHO can be written as

$$\text{IREF} = \sum_i F_i * (\text{PWRF})_i \qquad (1)$$

where

F_i = frequency of the ith release class,

$(\text{PWRF})_i$ = population weighted risk factor for the ith release class

$$= \frac{\text{No. of early fatalities to 1 mile from the } i^{th} \text{ release class}}{\text{Total Population to 1 mile}}$$

and the sum in Equation (1) is over all release classes. If a large early release is considered to be the only type of release that could potentially give rise to an early fatality, then $\sum F_i$ in Equation (1) would be identically equal to the LERF.

Generally, a Level-3 probabilistic consequence assessment (PCA) code, such as MACCS [3], is used to evaluate the population weighted risk factor. In the absence of a Level-3 PRA calculation, however, some approximations have to be developed to provide a link between the LERF and the early fatality QHO. Some insights on the population weighted risk factor, as a function of the source term, can be obtained from the calculations carried out in support of the Large Release Study [4] and summarized in the document SECY-93-138 [5]. One set of calculations in the Large Release Study attempted to specify a set of source terms which had a potential to cause one early offsite fatality within 1 mile of the plant boundary.

A large number of MACCS code calculations were performed at a generic "80th percentile" site, defined from the standpoint of meteorological characteristics, that otherwise varied in population density and exclusion area boundary distance. The site meteorological parameters, such as average windspeed, atmospheric stability class, and rainfall, were obtained from the data contained in the Sandia Siting Study [6] of 29 National Weather Service sites based on existing reactor sites in the U.S. These parameters were used to define an "80th percentile" site from the standpoint of consequences. They were selected to ensure conservative but realistic consequences for a given source term. A description of the procedure used to define the 80th percentile site is provided in the study which reassessed the adequacy of the basis for siting of nuclear power plants from a Safety Goal perspective [7].

In the Large Release Study, for each given source term, the early fatalities to 1 mile were calculated assuming: (i) no evacuation, (ii) an evacuation based on NUREG-1150 assumptions, and (iii) a "conservative" evacuation with a longer delay time, a slower evacuation speed, and a lesser participation (95% versus 99.5% in NUREG-1150). Candidate source terms for a large release were derived from six sets of simplified source terms based on the five plants studied in NUREG-1150 [8] and the La Salle Independent Risk Assessment. For each set of candidate source terms, the timing of the release to the environment and the release fractions of the volatile and semi-volatile radionuclides, principally iodine, cesium, and tellurium, were varied so as to result in 1 mean early fatality within one mile of the site boundary.

The results of the Large Release study, which used the MACCS code, indicate that for early releases (within about 4 hours of accident initiation) a release fraction of approximately 2.5% to 3% of the iodine inventory and/or the tellurium inventory will give rise to one mean early fatality within 1 mile of the plant boundary. Another result of the study pertaining to the population weighted risk showed that, in the mean, the plume spreads at most over one-third of each of the 16 angular sectors around the plant. This result was obtained by locating one person in each of the 16 angular sectors around the plant and using a source term which would give rise to at least one early fatality. If one early fatality occurs, the population weighted risk would be identical to 1/16 or 0.06. However, the mean population weighted risk for the extreme release was about 0.02 which shows that the plume extends laterally only to about one-third of the width of one angular sector in the mean (averaged over the weather).

If the early fatality QHO, or IREF, in Equation (1) is written as

$$IREF = LERF * PWRF$$

and we assume, based on the discussion above, that the PWRF = 0.02, then, given that the IREF $\leq$ 5E-07 per year, the LERF $\leq$ 2.5E-05 per year. With some margin for uncertainty, the LERF value can be rounded off to 1E-05 per year.

DG-1061 proposes an acceptance guideline of 10^{-4} per reactor year for CDF and 10^{-5} per reactor year for LERF as a basis for risk-informed decision making. These guidelines are intended for comparison with full-scope PRAs, i.e., PRAs which include internal and external initiating events and all plant operating conditions including full power, low power, and shutdown operation.

A.2 Bases and Sources for Estimating LERF

There are basically three sources for obtaining information pertaining to LERF estimation from publicly available data:

(1) the results of the NUREG-1150 program for 5 plants and the La Salle independent risk assessment; these were all Level-3 PRAs which calculated integrated risk and for which a quantity analogous to LERF can be inferred from the containment failure mode matrix,

(2) the IPE program [9, 10] which provided point estimates of containment failure mode conditional probabilities and source term characterization for internally initiated events, and

(3) the IPEEE program which extended the IPE results to externally initiated events.

These sources have been utilized to provide information relating to LERF for the plants which were studied in Appendix B to this report using the simplified event tree procedure. These plants are (by containment type):

Large, Dry/Sub-atmospheric PWR: Surry, Davis Besse, and Palo Verde
Ice Condenser PWR: Sequoyah, McGuire
Mark I BWR: Peach Bottom, Oyster Creek
Mark II BWR: Limerick
Mark III BWR: Grand Gulf.

Four of the above plants, Surry, Sequoyah, Peach Bottom, and Grand Gulf, were evaluated in NUREG-1150. A LERF estimate can be obtained as the sum of the frequency of the containment bypass and the early containment failure modes evaluated in NUREG-1150; distribution of these frequencies are provided in the NUREG-1150 reports [8].

IPE information is supplied in the form of a containment failure mode matrix which displays the conditional probability of various modes of containment failure--bypass, early failure, late failure, basemat meltthrough, and no failure, for each plant damage state. Each containment failure mode is associated with a number of release classes which are defined by the release fractions of various fission product radionuclide groups, such as the noble gases, iodine, cesium, tellurium, strontium, ruthenium, cerium, and barium, belonging to each release class.

Three types of assumptions have been utilized in analyzing the above information in the IPE database for exploring a possible definition of LERF:

(1) LERF consists of the total frequency of all release classes that occur under the early containment failure or containment bypass categories of the containment failure mode matrix.

(2) LERF consists of the frequency of release classes associated with the early failure and bypass containment failure modes which have release fractions of the volatile/semi-volatile fission products (Iodine, Cesium, Tellurium) equal to or greater than about 2.5% to 3% (based on the insights of the Large Release Study discussed above).

(3) A third alternative, based on a memorandum prepared for the ACRS [11], is that LERF is the frequency of early failure and bypass containment failure modes that have a release fraction of iodine equal to or greater than about 10%, based on calculations performed by Kaiser [12].

A.3 References

1. USNRC, "An Approach for Using Probabilistic Risk Assessment in Risk-Informed Decisions on Plant-Specific Changes to the Current Licensing Basis," Draft Regulatory Guide, DG-1061, U.S. Nuclear Regulatory Commission, February 28, 1997.

2. USNRC, "Safety Goals for the Operation of Nuclear Power Plants; Policy Statement," Federal Register, Vol. 51, No. 149, U.S. Nuclear Regulatory Commission, August 4, 1986.

3. Chanin, D. I., J. Rollstin, J. Foster, and L. Miller, "MACCS Version 1.5.11.1: A Maintenance Release of the Code," NUREG/CR-6059, SAND92-2146, Sandia National Laboratories, June 1993.

4. Hanson, A. L., R. E. Davis, and V. Mubayi, "Calculations in Support of a Potential Definition of Large Release," NUREG/CR-6094, BNL-NUREG-52387, Brookhaven National Laboratory, May 1994.

5. USNRC, "Recommendation on Large Release Definition," SECY-93-138, U. S. Nuclear Regulatory Commission, May 19, 1993.

6. Aldrich, D. C., et al., "Technical Guidance for Siting Criteria Development," NUREG/CR-2239, Sandia National Laboratories, 1982.

7. Davis, R. E., A. L. Hanson, and V. Mubayi, "Reassessment of Selected Factors Affecting Siting of Nuclear Power Plants," NUREG/CR-6295, BNL-NUREG-52442, Brookhaven National Laboratory, February 1997.

8. USNRC, "Severe Accident Risks: An Assessment for Five U.S. Nuclear Power Plants," NUREG-1150, U.S. Nuclear Regulatory Commission, December 1990.

9. USNRC, "Individual Plant Examination of Severe Accident Vulnerabilities - 10 CFR 50.54(f)," Generic Letter GL-88-20, U.S. Nuclear Regulatory Commission, November 23, 1988.

10. USNRC, "Individual Plant Examination Program," NUREG-1560, U.S. Nuclear Regulatory Commission, November 1996.

11. Sherry, R., "Considerations for Plant-Specific Site-Specific Application of Safety Goals and Definition of Subsidiary Criteria," Memorandum to ACRS Members, June 27, 1997.

12. Kaiser, G. D., "The Implications of Reduced Source Terms for Ex-Plant Consequence Modeling," ANS Executive Conference on the Ramifications of the Source Term, March 12, 1985, Charleston, SC.

APPENDIX B
CASE STUDIES

B.1 Introduction

This appendix summarizes several case studies [1, 2] that were performed using the original guidance in Appendix B of Draft DG-1061 [3]. One objective of these case studies is to use the simplified approach and compare the results with Level-2 results for the same plants. The purpose is to identify causes for discrepancies, especially in cases where Appendix B guidance leads to underestimation or significant over estimation of large early release frequency (LERF). The objective is also to identify special PRA assumptions and/or design and operational features that are driving the results and the estimates of split fractions recommended in Draft DG-1061. The results of this exercise are described in Section B.2. Another important objective is to extend the scope of Draft DG-1061 guidance to include external events and modes of operation other than full power. Section B.3 summarizes ways in which the guidance in Draft DG-1061 can be expanded to cover a wider scope. Based on the results of the comparisons, improvements to the guidance and potential modifications to the event trees were developed. These recommendations are presented in Section B.4.

B.2 Approach

In the case studies, the individual plant examinations (IPEs) of nine plants were used with the simplified event tree approach to estimate the LERF for each plant. These plants were selected so that the five different containment types in Draft DG-1061 were covered in the study. Different methods were used to estimate the LERFs, based on the information provided in the IPE submittals. The methods are discussed below:

Method (1)

The bypass and early containment failure frequencies reports in the Level-2 portion of the IPE submittals were summed to provide an estimate of the LERF. This approach is similar to the simplified approach in Draft DG-1061 and simply considers early failure and bypass events without considering the magnitude of the environmental source terms. However, not all early containment failures result in large source terms and there is a threshold below which early fatalities will not occur. The threshold for early fatalities depends on several factors. In the Large Release Study [4], many calculations were performed to determine the conditions under which an off-site early fatality could occur as a function of the fraction of the core inventory released of different radionuclide groups. A threshold of I, Cs, ≥ 0.03 was determined based on a spectrum of these calculations. This threshold is used as the basis for method 2 below.

Method (2)

The frequencies of release categories reported in the IPEs that resulted in at least 3 percent release of I, Cs, and/or Te were summed to provide an alternate estimate of LERF based on the calculations reported in Appendix A above. The release fractions were extracted from the IPE database compiled at Brookhaven National Laboratory (BNL).

Method (3)

This approach is similar to Method 2 above but uses larger release fractions to define LERF. The frequencies of release categories reported in the IPEs that resulted in at least 10 percent release of I and Cs were summed to provide another estimate of LERF. The 10 percent release fractions were used because several utilities used this threshold to define a large release in their IPE submittals. The release fractions were extracted from the IPE database compiled at BNL.

Method (4)

The simplified event tree approach described in Draft DG-1061 was used with each of the Level-1 analyses reported in the IPEs to calculate LERF. The estimates of LERF obtained from the Draft DG-1061 approach were compared to the other LERF estimates.

B.3 Summary of Results

In this section, the results of applying the simplified event tree approach are discussed and compared with the other approaches described in Section B.2. The results of the various approaches are summarized in Table B-1.

The trends shown in Table B-1 are generally as expected. The LERF values derived directly from the IPE Level-2 results indicate that by summing the frequencies of all early failure and bypass events (Method 1) the highest estimate of LERF is obtained. Lower estimates of LERF are obtained as source terms with progressively larger release fractions are used to define LERF. The difference between the values of LERF derived from these approaches based on the IPE Level-2 analyses is not too significant for the pressurized water reactor (PWR) plants (i.e., Surry, Davis Besse, Palo Verde, Sequoyah, and McGuire). However, for the boiling water reactor (BWR) plants (i.e., Peach Bottom, Oyster Creek, Limerick, and Grand Gulf) the variation in LERF estimates using the different approaches is more significant.

The major reason for the lack of variation in the PWR results is that LERF tends to be dominated by bypass events with relatively large source terms. Large structural failures of the containment in which the source terms are also generally predicted to be very high can also be important contributors to LERF. This means that the frequency of bypass and early failures is very similar to the frequency of relatively large source terms. This is however not the case for BWR plants where bypass events (such as interfacing systems loss-of-coolant accidents [LOCA]) tend to be minor contributors to LERF and source terms from early containment failure can be significantly reduced by suppression pool scrubbing. The differences between the frequencies of early failure and bypass and the frequencies of large source terms are very significant for the BWR plants.

Estimates of LERF obtained using the simplified event tree approach (refer to Table B-1) are generally higher than LERF estimates derived from the IPE Level-2 results. This is to be expected as the simplified event trees were constructed to provide bounding estimates of LERF. However, there were a number of exceptions, and as the underlying reasons for the higher LERF estimates using the Draft DG-1061 approach might warrant revising the simplified event trees, they were explored in more detail.

B.3.1 PWR Large Dry or Subatmospheric Containments

Surry

The application of the Draft DG-1061 guidance to Surry produced an estimated LERF that compared well to the more detailed Level-2 PRA results reported in the Surry IPE (refer to Table 2-1 and Appendix A). The LERF predictions obtained from the various approaches for Surry are close largely because LERF is dominated by bypass events (i.e., steam generator tube ruptures and interfacing systems LOCA) and the simplified approach captures these events with a conditional probability of unity.

Table B-1 Comparison of LERF Estimates Calculated Using Different Methods

Nuclear Power Plant Considered	Core Damage Frequency	LERF Calculational Method			
		Derived from IPE Level-2 Results			Derived from IPE Level-1 Results
		Method 1	Method 2	Method 3	Method 4
		Frequency of Bypass and Early Failure	Frequency of Source Terms with I, Cs, and/or Te ≥ 0.03	Frequency of Source Terms with I, Cs ≥ 0.1	Based on Guidance in Draft DG-1061
Surry	7.5e-05	1.3e-05	1.3e-05	1.2e-05	1.6e-05
Davis Besse	6.5e-05	7.6e-06	6.7e-06	6.7e-06	7.4e-06
Palo Verde	9.7e-05	1.4e-05	1.4e-05	1.3e-05	1.0e-05
Sequoyah	1.7e-04	1.1e-05	1.1e-05	8.0e-06	2.2e-05
McGuire	4.0e-05	1.9e-06		9.6e-07	2.2e-06
McGuire Seismic+Tornado	3.4e-05	2.7e-06			6.8e-06
McGuire Seismic	1.4e-05				2.8e-06
McGuire Tornado	1.9e-05				4.0e-06
McGuire Fires	8.1e-08				1.7e-08
Peach Bottom	5.5e-06	1.3e-06	2.6e-07	2.7e-08	4.2e-06
Oyster Creek	3.7e-06	7.8e-07	3.3e-07	3.3e-07	1.8e-06
Seismic	3.6e-06	7.1e-08			3.3e-06
Fires	1.3e-07	2.5e-08			5.2e-08
Limerick	4.3e-06	4.0e-07	1.6e-07	2.6e-08	1.3e-06
Grand Gulf	1.7e-05	7.3e-06	6.0e-06	5.4e-07	3.4e-06

Davis Besse

The dominant cause of early containment failure is due to side wall contact with the core debris. This failure mechanism is not specifically addressed in the simplified event tree approach. Induced steam generator tube rupture (SGTR) was also modeled in the IPE but its contribution is small. The simplified event tree method estimates a lower value of LERF than obtained from the IPE Level-2 analysis. This is due to the high probability, 0.2, used in the IPE for side wall contact with the core debris for some core damage sequences.

Palo Verde

The simplified event tree approach did not provide a bounding estimate of LERF because the approach assumes that a TW sequence will not lead to early fatalities. In the IPE, TW sequences were assumed to lead to early fatalities and therefore contributed to LERF.

B.3.2 PWR Ice Condenser Containment

Sequoyah

The IPE result is dominated by SGTRs, followed by failure of containment due to direct contact of containment by core debris through the in-core instrumentation cable tunnel. Interfacing LOCAs were found to contribute very little to the core damage frequency (CDF). The Sequoyah IPE reported that the cavity design is such that the core debris could under some circumstances reach and fail the seal table, and from there reach the containment liner. The simplified event tree approach does not include a discussion of early containment failure due to direct contact of core debris with the containment for this containment type. As a result, LERF estimated by the simplified approach is dominated by SGTR and seal LOCAs caused by loss of support systems leading to a station blackout type of scenarios. The igniters are available, the RCS is at high pressure, and the dominant containment failure modes are induced SGTR and direct contact of debris with containment.

McGuire

An interesting result of the McGuire IPE is that the conditional early fatality risk is reported to be significantly different for containment bypass and early failure. The conditional probability of early fatality risk due to a containment bypass is much higher than the risk associated with early containment failure. This is due to the different source terms associated with these different scenarios.

Based on the IPE, flooding is a contributor to induced SGTR. The contribution of other SGTR scenarios and interfacing system LOCAs is much smaller. Another contributor to LERF is containment failure caused by severe accident loads generated during a station blackout type scenario.

The LERF estimated from the simplified event tree approach does not have much contribution from flood scenarios, while the dominant contributor is a station blackout type scenario. Induced SGTR is one of the possible causes of containment failure/bypass in a station blackout. However, due to the blackout, restarting a reactor coolant pump (RCP) is not possible, making an induced SGTR less likely.

Seismic events and tornados contribute significantly to the total core damage frequency. The dominant scenarios include a loss of offsite power caused by the initiating event and independent failure of the diesel generators. The frequency of seismic events and tornados is more than an order of magnitude lower than the frequency of loss of offsite power. What makes these events important is that offsite power is not recoverable.

B.3.3 BWR Mark I Containments

Peach Bottom

The Peach Bottom IPE core damage sequences are dominated by station blackout, transients with failure to depressurize, and ATWS scenarios. These sequences are high pressure sequences with no water in the drywell. Containment bypass sequences are very small contributors to the CDF in the Peach Bottom IPE.

Application of the Draft DG-1061 guidance to the Peach Bottom Level-1 results produced an estimate of LERF about a factor of 3 larger than the frequency of early containment failure and bypass reported in the Level-2 IPE results. This higher LERF estimate is due to the bounding estimates of early containment failure in the simplified event trees in Draft DG-1061. A much smaller fraction of the core damage accident sequences were assumed to result in early containment failure in the Level-2 analysis reported in the Peach Bottom IPE.

In addition (as noted above), there is significant variation in the magnitude of LERF if the size of the source term is taken into account (refer to Table B-1). This variation can be attributed to the potential for suppression pool scrubbing, which can significantly reduce the source term even if the containment is predicted to fail early. This explains the differences in the LERF estimates derived from the Level-2 IPE results in Table B-1. However, the BWR simplified event trees do include a question that is intended to capture the potential for suppression pool scrubbing. The relatively high value of LERF derived from the simplified event trees therefore implies that the full potential for pool scrubbing is in fact not being taken into account. The guidance for this question in the simplified trees should be reviewed.

Oyster Creek

Based on the IPE, the most dominant early containment failure mode is over pressurization. This agrees with the result of the simplified event tree. The dominant sequence is a station blackout type scenario with safety valves cycling. After vessel breach the fire water system is assumed to be available for injection, i.e., there is water in the cavity. Early containment failure occurs due to over-pressurization, and there is no scrubbing in the reactor building. The simplified event tree gives a probability of 1 for containment failure under these circumstances.

The external event analysis was performed using the same plant damage state (PDS) groups defined for internal events. External events were found to have no significant impact on containment performance. Based on IPEs for external events (IPEEE) results, the dominant cause of core damage is the NIHx PDS [2]. Based on the definition of the PDS, the simplified event tree gives a probability of 1 for containment failure. The seismic results do not have PDS with "L" representing late failure as the second letter. Fire induced LERF is dominated by PDS xIxx with containment intact at onset of core damage.

Based on the results of the simplified event tree approach, the over all LERF is dominated by seismic events.

B.3.4 BWR Mark II Containments

Limerick

The most dominant core damage scenarios involve loss of inventory in which the pressure in the reactor pressure vessel remains high. Application of the Draft DG-1061 guidance to the Limerick Level 1 results produced comparisons with the other approaches that followed similar trends to those observed for the Peach Bottom application (as noted above). The Peach Bottom discussion is therefore generally applicable to the Limerick application.

B.3.5 BWR Mark III Containments

Grand Gulf

The simplified event tree approach did not produce a bounding value of the LERF for Grand Gulf. The lower LERF estimate is due to the fact that reactor pressure vessel (RPV) venting after vessel breach is modeled in the IPE but not modeled in the simplified event tree approach. In the emergency procedure guidelines prepared by the BWR owners' group (BWROG), the operator is instructed to open the main steam isolation valves (MSIVs) to flood the drywell and vent the RPV. In order to model this mode of containment failure, a top event should be added to the simplified event tree.

In addition, some sequences were classified in the IPE as loss of containment heat removal sequence. The Draft DG-1061 guidance suggests there is sufficient time for evacuation for these sequences and therefore no potential for early fatalities. However, it was assumed in the IPE that such sequences could potentially lead to early fatalities.

B.4 Extension of Scope to External Events and Shutdown

This section provides a description of ways in which the scope of the guidance in Draft DG-1061can be extended to include external events and modes of operation other than full power. The extension can be accomplished by modifying the event trees, and providing more guidance specifically related to external events and shutdown.

Modification of Event Trees

For external events, such as earthquakes, hurricanes, and tornados, evacuation may not be possible. As a result, a late containment failure may lead to early fatalities. The potential for late containment failure is not modeled in the current version of the event trees. It is necessary to expand the event trees to differentiate between no containment failure and late containment failure for accidents initiated by external events that can impede evacuation.

Additional Guidance

Seismic Events

- The probability of recovering the emergency core cooling system (ECCS) before vessel breach should be set to zero, since such recoveries are only applicable to loss of off-site power events and offsite power is not expected to be recovered after a severe seismic event.
- The guidance for loss of containment sequences (usually designated as TW) should include additional consideration on the impact of seismic events on evacuation.
- The effect of a seismic event on containment isolation should also be explicitly accounted for in the guidance.

Tornados and Hurricanes

- The probability of recovering ECCS before vessel breach should be set to zero, since such recoveries are only applicable to recovery of off-site power which is not likely after these initiating events.
- The guidance on TW sequences should include additional consideration on the impact of these events on evacuation.

Fire Events

- The probability of recovering ECCS before vessel breach should be set to zero, since loss of ac as a result of fire damage is assumed not to be recoverable in the time frame of interest.

- The effect of the initiator on containment systems, e.g., venting, isolation and cooling, should be explicitly accounted for in the guidance.

Shutdown Events

- The decay of short lived radionuclides, such as iodine and tellurium, can significantly reduce the early fatality consequence. This should be discussed in the guidance for the simplified event trees and the appropriate time lines after which LERF would not be of concern should be identified.

- Containment could be open or its pressure retaining capacity may be degraded during shutdown events. Guidance should be provided on how to deal with this plant configuration.

- Additional guidance should be provided for shutdown accidents with the containment closed. For example, are the current event trees adequate for this condition or should the split fractions be adjusted for shutdown conditions?

- The containment spray could be either isolated or under repair during some shutdown scenarios. The basis for taking credit for recovery of the spray system should be provided.

- Due to reduced decay heat, the probability of arresting the core damage before vessel breach could be significantly higher than that used for accident scenarios occurring during full power operation. Specific guidance on the recovery probability during shutdown therefore should be provided.

B.5 Lessons Learned and Recommendations

As a result of the trial applications of the simplified approach, a number of potential improvements to the guidance and to the structure of the event trees became apparent. The guidance should be clarified to indicate that the input to this approach is a Level-1 PRA, and the output is an estimated LERF. It should be pointed out that additional analysis beyond a Level-1 PRA is needed. For example, in order to answer the question related to containment isolation failure in the simplified event trees additional analysis is required beyond that normally done for a Level-1 PRA. In addition, the hydrogen igniters need to be modeled in order to quantify the event trees. Also, information on the reactor cavity design has to be collected to determine the likelihood of direct contact of the core debris with containment.

The guidance in Draft DG-1061 was prepared for 5 containment types. Most of the top events in the event trees are similar but the guidance associated with the same top event in different event trees can vary from one tree to another. It is also confusing if the guidance provided for a top event refers to the guidance of the same top event for a different containment type (as was done in a few case in Draft DG-1061). In other cases, the same guidance was duplicated with the minor changes to account for the difference in containment types. For example, the guidance provided for the "reactor coolant system (RCS) depressurized" top event for the two PWR event trees are of different lengths. It is not obvious if the longer discussion provided for a dry containment is also applicable to an ice condenser containment. It is important to ensure that the guidance for each containment type has enough detail in itself without the need to have such cross references.

Containment Isolated or Not Bypassed

It should be pointed out that this first question in the event trees represents containment failure modes that are not associated with accident progression, while the rest of the top events in the trees model containment failure events

associated with the accident progression. For example, for some TW sequences, containment failure occurs before core damage.

It should be mentioned that the containment isolation system needs to be modeled using a Level-1 PRA type system analysis, in order to determine the likelihood of containment isolation failure. A few PWRs found that containment isolation failure is the most important cause of early containment failure. For external events, potential containment failures caused by the initiating event should also be modeled.

RCS Depressurization

This question is intended to determine the RCS pressure at the time of vessel breach. It is clearly beyond the scope of a Level-1 PRA. To answer this question, some rules can probably be established in terms of the availability of relief valves and safety valves, and how the RCS was depressurized to allow for injection of the low pressure systems. For those sequences with depressurization capability available, the human errors in actuating the depressurization function prior to vessel breach become an important contributor. In some cases, deterministic analysis may have to be performed to determine the RCS pressure prior to vessel breach. In general, the guidance provided is rather brief and does not consider all possible scenarios. Improving the guidance for this question would be helpful. For example, for PWRs, the number of available power operated relief valves (PORVs), the availability of secondary heat removal, and whether or not core damage occurs during the ECCS recirculation phase are factors that can affect the likelihood of a depressurized RCS. For BWRs, the number of available safety relief valves (SRVs) and whether or not core damage occurs during the ECCS recirculation phase are factors that can affect the answer to this question. It is therefore desirable to specify guidance in terms of these factors. The basis for any assumptions made should also be provided. Note that the criteria used for this purpose may not be the same as the success criteria used in the Level-1 PRA.

Core Damage Arrest Before Vessel Breach

This top event in the simplified event trees currently only deals with the situation in which loss-of-offsite power is the cause of core damage. Under these circumstances, recovery of offsite power allows coolant injection to be restored and vessel breach can be prevented. Therefore, it should be made clear in the guidance for application of the simplified event trees, that the non-recovery probability of offsite power is the probability of failure to prevent vessel breach. In addition, no justification is provided for the recovery time prescribed in the current guidance and greater flexibility should be allowed.

No Potential for Early Fatality

This is the only top event that attempts to account for the timing of releases from accidents. The guidance is clear for the TW sequences. No guidance is provided for sequences in which containment fails after vessel breach, say, due to over pressurization caused by loss of containment heat removal. Are these sequences considered "late" containment failures? Late failures are important for external events in which evacuation is not possible. For that purpose, it may be necessary to have a transfer from those sequences with no containment failure at vessel breach to an event tree that determines if a late containment failure is likely. To account for the decay of isotopes that cause early fatalities in shutdown accidents, some guidance should be provided on the probability of early fatality as a function of the time after reactor shutdown.

Hydrogen Igniter Operability

The information needed to address this question is generally not modeled in a Level-1 PRA. The igniters require ac power to operate and are usually started manually. In principle, a detailed fault tree could be developed and integrated into the Level-1 model. Without developing a fault tree, a way to quantify this question is to simply assume that the igniters are available as long as ac power is available.

Containment Venting

Consideration should be given to adding a new question to the simplified event trees to take into account venting strategies for the BWR plants. Venting was found to be an important contributor to LERF for Grand Gulf and because it was not modeled in the simplified event trees, they under predicted LERF when compared with the IPE Level-2 results.

Drywell Venting

The BWROG have developed emergency procedure guidelines (EPGs) that instruct the operators to flood the drywell after vessel breach, and vent the drywell using drywell vents or vent the RPV by opening the main steam isolation valves (MSIVs). This operator action is an accident management strategy that can potentially contribute to LERF. In the Grand Gulf IPE, RPV venting is a dominant contributor to LERF. In the Duane Arnold IPE, venting was found to release 6% of the core inventory of Cs and I. Consideration should therefore be given to adding this venting strategy as a top event in the event tree, unless it can be shown that the release is not going to cause early fatalities.

Loss of Containment Heat Removal (CHR) and TW Sequences

These sequences are typically defined by containment failure caused by loss of CHR which in turn causes loss of coolant injection and ultimately core damage. Both containment failure and core damage could occur many hours after the initiating event. However, core damage could occur shortly after containment failure. This is the case for some sequences reported in the Palo Verde IPE in which the releases exceeded 3% of Iodine. These sequences should be categorized as potentially leading to LERF even though the time of containment failure is late. The procedure guide should clearly define the TW sequences (the current definition is ambiguous). The procedure guide should also specifically state that such TW sequences without effective evacuation should be treated as LERF contributors. Therefore, the burden is on the utility to demonstrate an effective emergency evacuation procedure for such TW scenarios before assuming that they will not result in early fatalities.

Induced SGTR

This failure mode is discussed in the two PWR event trees. However, for some PWRs, the probability of such a failure is significantly higher than the containment failure probability used in the event tree. This high probability of SGTR can be due to scenarios in which the operators are expected to re-start the RCP, which enhances the heat transfer and increase the likelihood of the failure mode. A possible way to address this is by adding a top event questioning the re-start of the RCPs. Pressure-induced rupture of the SG tubes can occur when the differential pressure across the tubes is increased. This can happen, for example, in scenarios where the secondary side of the SGs becomes depressurized for any reason including operator actions directed by emergency operating procedures (EOPs), severe accident management guidance (SAMG), steam line relief valves that may stick open, and leakage of main steam line (or other) isolation valves that may not be capable of maintaining secondary side steam pressure once the water inventory has been depleted.

Induced Failure of Isolation Condenser

For Mark I BWRs with an isolation condenser, the potential for an induced failure of the isolation condenser tubes should also be evaluated. This issue should be evaluated for potential inclusion in the simplified event trees.

Direct Contact of Debris with Containment

This failure mode is usually associated with BWR Mark I containments; however, a few PWRs (including Davis Besse, Sequoyah, and Watts Bar) also found it to contribute to the frequencies of early containment failure. The guidance for the PWR trees should be enhanced to capture this potential failure mode.

Floor Drain in BWR Mark II and III Plants

The pedestal cavity and the drywell floor are connected by drain lines that may be further connected to the reactor water cleanup system outside the containment. The conditions under which this containment bypass path will be open should be identified and included in the simplified event trees.

Containment Spray System

In some PWR IPEs, the operation of the containment spray system before, during, and after vessel breach was credited for reducing the containment failure probability due to direct containment heating (DCH), and lowering the source term releases to the environment. The reduction in release fraction by itself could reduce the chance for early fatalities. The enhanced/expanded event trees should include the impact of the containment spray.

Split Fractions

Quantitative split fractions were specified only for the top event on containment failure before vessel breach. All other top events do not have guidance on how to determine a split fraction or whether or not a yes/no answer is adequate. This needs to be explained at the beginning. For example, the discussion related to the "potential for early fatality" addresses the timing to be considered without quantitative guidance. Similarly, the discussion related to accidents during shutdown highlights the effect of decay but without quantitative guidance. How is the time available for evacuation to be used to determine a split fraction? There also appears to be a difference in the guidance between the PWR and BWR event trees. If split fractions are required instead of a yes/no answer as stated at the beginning of the Mark I containment discussion, then more guidance should be provided.

Anticipated Transients Without Scram (ATWS)

More explicit guidance is needed for accidents of this type. For BWRs, it is probably reasonable to assume that core damage caused by an ATWS would also fail the reactor coolant boundary and containment. As a result, the RCS is at low pressure prior to vessel breach. For PWRs, ATWS scenarios could generally be divided into two categories, one with adequate pressure relief capability, and the other without adequate pressure relief capability. In the former category, rupture of the primary system, (specifically containment bypass caused by SGTR), is expected. In the latter category, the containment could be failed early after core melt and vessel rupture. Generally, all ATWS scenarios have the potential for contributing to LERF. This should be reflected in the guidance portion of the enhanced/expanded event trees.

B.6 References

1. Chu, T-L., Azarm, M.A., "An Evaluation of the Simplified Event Trees Described in Appendix B of Draft Regulatory Guide (DG-1061)," BNL Technical Report, JCN W-6234, July 1998.

2. Chu, T-L., Azarm, M.A., "Extension of Scope of the Simplified Event Trees Described in Appendix B of Draft Regulatory Guide (DG-1061)," BNL Technical Report, JCN W-6234, July 1998.

3. USNRC, "An Approach for Using Probabilistic Risk Assessment in Risk-Informed Decisions on Plant-Specific Changes to the Current Licensing Basis," Draft Regulatory Guide DG-1061, November 1996.

4. Hanson, A., Davis, R.E., and Mubayi, V., "Calculations in Support of a Potential Definition of Large Release," NUREG/CR-6094, May 1994.

APPENDIX C
CASE STUDIES BASED ON SHUTDOWN PRAs

C.1 Summary

This appendix summarizes two case studies, on Surry and Grand Gulf, that were performed using the guidance for shutdown conditions of this report. The objective of these case studies is to use the simplified approach to estimate a LERF and compare the results with the Level-2 results of the same plants. Due to the limited scope of the two shutdown PRAs, only part of the guidance was exercised in the case studies.

In the case studies, two NRC sponsored shutdown PRAs [1,2] were used with the simplified event tree approach to estimate the LERF for each plant. The Surry study is a Level-3 internal event analysis of mid-loop operation, and the Grand Gulf study is a Level-3 internal event analysis of cold shutdown POSs. The two NRC sponsored shutdown PRAs did not use LERF as a measure. Therefore, LERF estimates were obtained using accident progression bin (APB) results and source term results of the shutdown PRAs. The following is a summary of the different methods used in estimating LERF.

Method (1)

The APB groups that correspond to open containment and failed containment are used in estimating a LERF for Surry. This estimate is conservative, because it is assumed that early fatality is possible in all time windows.

Method (2)

The APB groups of method 1 that correspond to late time windows are excluded in this method. It is a more realistic estimate of LERF based on the Surry shutdown PRA.

Method (3)

This is the method based on the simplified event tree method of this report. It is assumed that early fatality is only possible in the two early time windows. Following the approach of the earlier case studies for full power operation summarized in Appendix B, this method was applied to the top 100 cutsets/sequences or the top cutsets/sequences that constitute at least 95% of the total CDF, whichever is shorter.

Method (4)

NUREG/CR-6143 presents simplified accident progression event trees (APETs) for three groups of plant damage states (PDSs): Loss of Coolant Accident (LOCA), Station Blackout (SBO), and the "Other" (remaining) PDSs. These simplified APETs are similar to the simplified "BWR Mark III Containment Event Tree" presented in Figure 4.6 of this report. Method 4 estimates a LERF by evaluating these simplified APETs.

Method (5)

Method 5 estimates LERF by summing the frequencies of source term groups that resulted in at least 10 percent release of Iodine (I). These source term groups are reported in NUREG/CR-6143.

The results of the simplified event tree method in this report showed good agreement with the other applicable approaches. Lessons learned from these case studies were incorporated into the event tree guidance.

C.2 References

1. Chu, T-L., et al., "Evaluation of Potential Severe Accidents During Low Power and Shutdown Operations at Surry, Unit 1," NUREG/CR-6144, 1994.

2. Whitehead, D. W., et al., "Evaluation of Potential Severe Accidents During Low Power and Shutdown Operations at Grand Gulf, Unit 1," NUREG/CR-6143, 1995.

NRC FORM 335
(9-2004)
NRCMD 3.7

U.S. NUCLEAR REGULATORY COMMISSION

BIBLIOGRAPHIC DATA SHEET

(See instructions on the reverse)

1. REPORT NUMBER
(Assigned by NRC, Add Vol., Supp., Rev., and Addendum Numbers, if any.)

NUREG/CR-6595
Rev. 1

2. TITLE AND SUBTITLE

An Approach for Estimating the Frequencies of Various Containment Failure Modes and Bypass Events

3. DATE REPORT PUBLISHED

MONTH	YEAR
October	2004

4. FIN OR GRANT NUMBER

JCN Y-6103

5. AUTHOR(S)

V. Mubayi, T.L. Chu, G. Martinez-Guridi, W.T. Pratt, J. Lehner

6. TYPE OF REPORT

7. PERIOD COVERED *(Inclusive Dates)*

8. PERFORMING ORGANIZATION - NAME AND ADDRESS *(If NRC, provide Division, Office or Region, U.S. Nuclear Regulatory Commission, and mailing address; if contractor, provide name and mailing address.)*

Brookhaven National Laboratory
Department of Advanced Technology
Upton, N.Y. 11973-5000

9. SPONSORING ORGANIZATION - NAME AND ADDRESS *(If NRC, type "Same as above"; if contractor, provide NRC Division, Office or Region, U.S. Nuclear Regulatory Commission, and mailing address.)*

Division of Risk Analysis and Applications
Office of Nuclear Regulatory Research
U.S. Nuclear Regulatory Commission
Washington, DC 20555-0001

10. SUPPLEMENTARY NOTES

D. M. O'Neal, NRC Project Manager

11. ABSTRACT *(200 words or less)*

This report is Revision 1 of NUREG/CR-6595, "An Approach for Estimating the Frequencies of Various Containment Failure Modes and Bypass Events," which the U.S. Nuclear Regulatory Commission (NRC) published in January 1999. The focus of the report is to provide a simplified approach for using a probabilistic risk assessment to estimate the frequency of containment failure and bypass events that result in radioactive releases to the environment with the potential for causing early fatalities. The approach uses the large, early release frequency (LERF) as a measure of the risk of early fatality.

This revision of NUREG/CR-6595 updates the guidance for full-power operation and provides additional guidance for estimating LERF under low power and shutdown conditions. The NRC staff issued a draft of this report for comment in August, 2003, and has appropriately addressed comments received in preparing the final report. The full power analyses in this revision reflect information gained from recent containment studies and the individual plant examination studies. The guidance provided in this revision is intended to encompass the likelihood of containment failure for most nuclear power plants.

12. KEY WORDS/DESCRIPTORS *(List words or phrases that will assist researchers in locating the report.)*

containment failure modes, large early release frequency, large dry containment, subatmospheric containment, ice condenser containment, Mark I containment, Mark II containment, Mark III containment, full power, low power, shutdown, pwr, bwr, LERF, RG 1.174

13. AVAILABILITY STATEMENT

unlimited

14. SECURITY CLASSIFICATION

(This Page)
unclassified

(This Report)
unclassified

15. NUMBER OF PAGES

16. PRICE

PRINTED ON RECYCLED PAPER

Printed
on recycled
paper

Federal Recycling Program

UNITED STATES
NUCLEAR REGULATORY COMMISSION
WASHINGTON, DC 20555-0001

OFFICIAL BUSINESS