NMC
Committed to Nuclear Excellence

Point Beach Nuclear Plant
Operated by Nuclear Management Company, LLC

November 8, 2004

NRC 2004-0112
10 CFR 50.12

U.S. Nuclear Regulatory Commission
ATTN: Document Control Desk
Washington, DC 20555

Point Beach Nuclear Plant Units 1 and 2
Dockets 50-266 and 50-301
License Nos. DPR-24 and DPR-27

Response to Request for Additional Information;
Request For Exemption to 10 CFR 50, Appendix R (TAC Nos. MC2267 and MC2268)

References: 1) Letter from NMC to NRC dated March 5, 2004 (NRC 2004-0026)
2) Letter from NRC to NMC dated September 29, 2004

In Reference 1, Nuclear Management Company, LLC (NMC), submitted a request for permanent exemption from certain requirements of 10 CFR 50, Appendix R, "Fire Protection Program for Nuclear Power Facilities Operating Prior to January 1, 1979," in accordance with the provisions of 10 CFR 50.12, "Specific Exemptions." In Reference 2, NRC staff requested additional information to complete its evaluation.

The enclosure provides the NMC response to the staff's questions.

This letter contains no new commitments or changes to existing commitments.

Dennis L. Koehl
Site Vice-President, Point Beach Nuclear Plant
Nuclear Management Company, LLC

Enclosure

cc: Regional Administrator, Region III, USNRC
Project Manager, Point Beach Nuclear Plant, USNRC
Resident Inspector, Point Beach Nuclear Plant, USNRC
PSCW

A006

6610 Nuclear Road • Two Rivers, Wisconsin 54241-9516
Telephone: 920.755.2321 • Fax: 920.755.6233

bcc:

J. W. Connolly	D. E. Cooper	K. M. Locke (2)
G. C. Packard	D. L. Koehl	F. D. Kuester (P460)
J. H. McCarthy	J. D. Shaw	H. J. Kocourek (OSRC)
J. G. Schweitzer	G. R. Sherwood	D. A. Weaver (P346)
E. J. Weinkam III	T. C. Kendall	File

ENCLOSURE 1

RESPONSE TO REQUEST FOR ADDITIONAL INFORMATION REGARDING REQUEST FOR EXEMPTION TO 10 CFR 50, APPENDIX R POINT BEACH NUCLEAR PLANT UNITS 1 AND 2

The following information is provided in response to the Nuclear Regulatory Commission staff's request for additional information (RAI) regarding Reference 1.

The NRC staff's questions are restated below, with the NMC response following.

NRC Question 1:

Explain in detail how the proposed exemption fulfills the special circumstances criteria given in 10 CFR 50.12(a)(2)(ii).

The licensee states that the proposed exemption is consistent with the intent of the regulation (applicable portions of Section 50, Appendix R) and therefore, literal compliance is not needed to fulfill the regulation's underlying purpose. This statement needs further detailed justification. This justification should describe how the proposed 'staged' equipment meets the underlying purpose of the regulations. Justification should also address characteristics of 'installed' equipment (equipment that allows literal compliance) that the proposed 'staged' equipment does not possess and why these characteristics are not essential to achieve the regulation's underlying purpose.

NMC Response:

10 CFR 50, Appendix R, Section III.G.1.a requires that, "One train of systems necessary to achieve and maintain hot shutdown conditions from either the control room or emergency control station(s) is free of fire damage." 10 CFR 50, Appendix R, Section III.L.1 requires that an alternative or dedicated shutdown capability shall be able to; "(c) achieve and maintain hot standby conditions for a PWR; (d) achieve cold shutdown conditions within 72 hours." NRC Inspection Report 50-266/2003-007; 50-301/2003-007, dated February 4, 2004, documents a Non-Cited Violation of Appendix R, Section III.L.1.c, in that NMC, "failed to ensure, without the need for 'hot standby repairs,' adequate control air to the speed controllers for the charging pumps during a postulated fire requiring an alternative shutdown method."

The installed backup nitrogen gas bottle bank (for the charging pump speed controllers) meets the requirements of the regulation, with the exception that it is of limited capacity. This means that the hot shutdown conditions could not be maintained *indefinitely* while relying only on the installed bottle bank. However, the 8 to 14 hour capacity of the bottle banks is ample time to extinguish the fire, achieve stable plant conditions in hot shutdown, augment staff with personnel from the emergency response organization,

and connect dedicated power cabling and hoses to the dedicated compressor using the furnished plugs and quick connect fittings (i.e., no tools required).

Because the bottle banks, hoses, cables, and compressor are all located in areas that would not be affected by the fires of concern, none would be damaged (see the responses to questions 3 and 4 below).

The installed backup bottle banks are normally isolated from the charging pump pneumatic controls by the bottle stop-cocks, a manual valve on the bottle manifold, and an in-line manual isolation valve. These valves must be opened to bring the backup nitrogen on line. In contrast, the (staged) dedicated air compressor must be connected to its power supply by retrieving the staged cable and hose(s) from their storage locations in the same fire area (Turbine Hall), laying them out from the compressor to the selected power supply and to the affected unit's backup bottle bank manifold, and then connecting the cable and hoses using the installed plugs and quick connect fittings before starting the compressor.

Although this activity could be considered a "hot standby repair," connection of these undamaged components to support continued hot shutdown conditions within 8 hours of the initiating event is reasonably achievable (see the response to question 7 below for details on validation). This can be performed without invoking extraordinary or heroic action, and without perturbing the stable plant conditions. Therefore, strict application of the interpretation proscribing any "hot standby repair" is not necessary to achieve and maintain hot shutdown conditions while relying only on the operating shift personnel, without undue encumbrances, and without having to resort to significant time consuming "repairs".

The NRC Inspection Report discussing this issue stated that, "The finding is of very low safety significance because it is likely that the licensee would have been successful in completing the repairs and allowing the plant to be maintained in hot standby until cold shutdown could be achieved." Therefore, literal compliance is not needed to fulfill the regulation's underlying purpose.

NRC Question 2:

Provide justification of a specific, detailed nature that the special circumstance criteria of 10 CFR 50.12(a)(2)(iii) are met. The licensee describes a few alternative systems that provide literal compliance with Appendix R, Section III.G.1.a of 10 CFR Part 50 and concludes that these alternatives either would present a considerable burden without significant improvement of safety, or are impractical, less safe, or costly. However, the justification provided is of a general nature. Specific, detailed bases for these conclusions are needed to evaluate the impracticality of the described alternatives. For the assessed alternatives, the licensee states some of the factors that contribute to the alternatives' impracticality. Discussion of these factors needs to address whether or not these factors can be mitigated so that the mitigative measures and the alternative, together, are practical and not excessive in cost. The bases for why this mitigation can or cannot be achieved also should be explained. Additionally, while some alternatives

may result in higher risk and/or costs, why the new risk and/or costs are unacceptable or excessive should be explained.

NMC Response:

Although NMC initially requested exemption based on the special circumstance criteria of both 10 CFR 50.12(a)(2)(ii) and 10 CFR 50.12(a)(2)(iii), approval of the requested exemption may be granted pursuant solely to the criteria given in 10 CFR 50.12(a)(2)(ii). In the response to Question 1 above, NMC has provided additional information to justify the exemption based exclusively on the criteria given in 10 CFR 50.12(a)(2)(ii).

NMC hereby requests that the special circumstances considered in the requested exemption be based only on the criteria given in 10 CFR 50.12(a)(2)(ii). Therefore, further review by the staff of the justification for meeting the criteria given in 10 CFR 50.12(a)(2)(iii) is no longer warranted.

NRC Question 3:

Please provide a graphical layout of the plant locations in question, including the charging pump room(s), the primary air compressor location(s), the backup N2 bottle manifolds, the dedicated air compressor, and the routes over which the electrical lines and pneumatic hoses would be laid out.

NMC Response:

Please refer to Attachment 1 to this Enclosure for three pages showing the graphical layout of the portions of the plant in question.

Figure 1 depicts the 8' (above lake level) elevation of the plant. Most of the equipment of concern is located on this figure. Near the upper left corner is the air compressor room containing all of the normal instrument and service air compressors. To the lower right and lower left are the six charging pump cubicles (three per unit) for Units 1 and 2, respectively. At left center are both the dedicated air compressor and the nitrogen bottle bank for Unit 2. The hoses for the compressor are stored in a metal storage box adjacent to the air compressor in the same fire zone. The power cords for the compressor are stored in a metal storage box on the 26' elevation of the Turbine Hall near the portable A-frame transformer (X-71). The nitrogen bottle bank for Unit 1 is shown at center right. The various hose and power cable routings are also depicted, as are the hard-piped tubing runs between the nitrogen bottle banks and the charging pump cubicles.

Figure 2 depicts the 26' elevation of the plant. In the upper left is the location for transformer X-71 that is placed early (1-2 hours post-event) to power temporary ventilation units (to augment ventilation systems that may have been damaged). A Y-connection in the power feed to this transformer supplies the dedicated air compressor later in the time sequence. The preferred power source to the transformer is the welding receptacle located nearby in the Cable Spreading Room (2PR-49). An

alternate power supply welding receptacle is located on the next floor up (44' elevation; PR-93), and the power feed is routed down via the Unit 1 truck bay hoist way.

Figure 3 depicts the 44' elevation, with the alternate welding receptacle power supply (PR-93) shown at the left center.

NRC Question 4:

Where are the fire locations that would create the loss of primary air supply? How are they separated from the N2 bottled gas? How are they separated from the dedicated air compressor, electrical line, and hose storage locations?

NMC Response:

Due to the extensive routing of copper air piping with silver brazed joints, it is assumed that any fire located at any point in the plant will cause a failure of the primary air supply. The leakage from a failure of one of these joints would cause system depressurization. Therefore, primary air supplies (both instrument and service air) are assumed to not be available during any fire.

On a loss of air pressure, a charging pump will fail to minimum speed but can continue to be operated. As long as a minimum of two charging pumps is available at minimum speed, adequate capacity exists to control reactor coolant system (RCS) inventory (i.e., letdown is isolated, and the inventory makeup is sufficient to accommodate RCS volume shrinkage and reactor coolant pump seal leakage).

Therefore, only the fire zones that could incapacitate two charging pumps on any one unit are of concern. In these cases, the remaining pump must be capable of being run at greater than minimum speed to meet RCS inventory control needs. In these events, the backup nitrogen and (later) the dedicated air compressor are necessary.

These fire zones are limited to:

- 8' level of the central Auxiliary Building (Area A01A shown in Figure 1 of Attachment 1),
- Pipeway #1 (Area A08 shown in Figure 1 of Attachment 1),
- Pipeway #4 (Area A11 shown in Figure 1 of Attachment 1),
- 2P2A Charging Pump Room (Area A14 shown in Figure 1 of Attachment 1),
- North Auxiliary Feed Water pump room (Area A23N shown in Figure 1 of Attachment 1),
- South Auxiliary Feed Water pump room (Area A23S shown in Figure 1 of Attachment 1),
- 4KV Vital Switchgear Room (Area A24 shown in Figure 1 of Attachment 1),

- 1B32 MCC Area (Area A06 Fire Zone 156 shown in Figure 1 of Attachment 1)
- 2B32 MCC Area (Area A15 Fire Zone 166 shown in Figure 1 of Attachment 1)
- 26' level of the central Auxiliary Building (Area A01B shown in Figure 2 of Attachment 1),
- 26' level of the Auxiliary Building – North (Area A01-CN shown in Figure 2 of Attachment 1),
- D04 Electrical Equipment Room (Area A17 shown in Figure 2 of Attachment 1),
- D06 Battery Room (Area A25 shown in Figure 2 of Attachment 1),
- D106 Battery Room (Area A16 shown in Figure 2 of Attachment 1),
- Cable Spreading Room (Area A30 shown in Figure 2 of Attachment 1),
- Control Room (Area A31 shown in Figure 3 of Attachment 1)

In each case, the nitrogen bottle banks, dedicated air compressor, and hose & cable storage are unaffected by the fire.

NRC Question 5:

Discuss the proposed 480V electrical power supplies and the analysis that shows they are not subject to common mode power supply/enclosure failures with the primary air supply. Is there a fire that can cause the loss of primary air and the loss of the electrical supply to the dedicated air supply?

NMC Response:

As discussed above, it is assumed that the primary air supply is lost in all plant fires. Only a limited number of fires require the dedicated air supply to be used to control the speed of a single charging pump above minimum speed. Two separate power supplies for the dedicated air compressor have been evaluated, either of which is sufficient. None of the fires that can result in the need to operate a single charging pump above minimum speed can also result in the simultaneous loss of power to both of the designated power supplies. Therefore, for the conditions that require the dedicated air supply, there is no fire that can cause the loss of its electrical supply.

Attachment 2, Figures 1 and 2, show graphically the power scheme development for the two different power supplies, 2B-03 and B-08 (each a 480 VAC 3-phase welding receptacle) and illustrates that the power for these supplies derive from diverse sources.

Receptacle	Location	Fire Zone/Area	Power Supply
2PR-49	Cable Spreading Rm. (26')	318/A30	2B-03
PR-93	Turbine Bldg. (44')	547/A01-E	B-08/PP-70

Load centers 2B-03 and B-08 are safe shutdown power supplies that have been evaluated for their post fire availability for each fire area. Load center 2B-03 is either

unaffected by fire or can be restored by operator action for all fire areas except in the Control Room (Area A31; Figure 3 of Attachment 1), Cable Spreading Room (Area A30; Figure 2 of Attachment 1), 4160V Vital Switchgear Room (Area A24; Figure 1 of Attachment 1), and the Auxiliary Feedwater Pump Room (Area A23; Figure 1 of Attachment 1). For any of those cases, power to the alternate receptacle (PR-93, powered from PP-70 and B-08) remains available. The two receptacles are physically located in different fire areas and there are no power supplies or enclosures associated with the two circuits that are located in a common fire area.

NRC Question 6:

Does repair procedure AOP-10A require entry into any areas where there is or has been fire or smoke? If so, discuss the fire hazards, the protective equipment required for operators, and the fire detection / suppression available in the areas.

NMC Response:

Procedure AOP-10A, "Safe Shutdown Local Control," is an abnormal operating procedure for reaching and maintaining hot shutdown conditions in the event of a fire that requires control room evacuation. It does not require entry by operators into areas in which there is or has been fire or smoke in order to establish and maintain safe shutdown conditions. Any step of the procedure that may direct entry into a space that could contain fire or smoke also provides an alternate location where the same action may be accomplished in the event that the preferred location is not accessible. For example, actions directed to be performed to de-energize loads from the cable spreading room may be performed by an alternate action in the vital switchgear room.

Because it is assumed that all equipment located in the affected fire zone has been damaged to the point that it cannot be operated, AOP-10A has been written to accommodate these situations. Therefore, no specific requirements for additional protective clothing or equipment are needed or anticipated.

Nonetheless, members of the Station Fire Brigade (which consists entirely of Operators) are trained in re-entry procedures and the use of associated protective gear ('Turnout' gear, Scott air packs, etc.), and this equipment is available for use.

NRC Question 7:

What are the demonstrated times for performance of AOP-10A? Have the times been demonstrated by all shifts?

NMC Response:

The time critical steps of AOP-10A are performed within the first hour. These include establishing steady state conditions with Auxiliary Feed Water for decay heat removal, isolation of letdown to minimize RCS inventory loss, and establishment of charging to makeup for RCS inventory loss. The ability to complete these actions has been

demonstrated to be achievable within the time limits for each function by in-plant simulation (walk-throughs). The demonstrated time for Control Room evacuation was four minutes post-initiation. Isolation of DC control power to limit spurious actuations was demonstrated to be completed within 15 minutes. Alignment of backup nitrogen to the charging pump controllers was performed within 20 minutes. The alternate AC power source was aligned within 34 minutes. Auxiliary Feed Water was established to both units within 38 minutes. Alignment of the charging pump suction and power supplies was completed and charging available within 39 minutes. A transient analysis was completed that demonstrated the time available to perform these last two critical actions was 50 minutes. These last two actions are supported by the previous actions and are necessary to maintain RCS sub-cooling greater than 35° F and to keep indicated pressurizer level on-scale.

The time validation of the procedure was performed by a single qualified individual simulating performance of each of the required steps in sequence. A parallel task timeline was constructed using the recorded data. NMC personnel concluded that ample time was available to complete the time critical steps such that further demonstration by all shifts was not necessary.

Please note that the task for which the exemption is being requested (connecting the dedicated air compressor) is not part of the scope of time validated actions. Because the task of connecting the compressor and bringing it on line may be completed at any time within the first eight hours post-event, and additional Fire Brigade and Emergency Response personnel would be available to complete this task, NMC has determined that this task does not require time validation.

NRC Question 8:

Are sufficient operators (aside from the fire brigade) available to complete AOP-10A?

NMC Response:

Yes. The site Fire Protection Evaluation Report (FPER) stipulates that the Fire Brigade shall consist of five Operations personnel. This is exclusive of the Shift Superintendent (Shift Manager), Duty Operations Superintendent (DOS), and the additional licensed operators required to place the plant in safe shutdown.

Procedure AOP-10A directs four sets of position specific tasks to place and maintain both units in safe shutdown. These tasks are performed by the DOS, the Unit 1 Operator, the Unit 2 Operator, and the "Third [licensed] Operator."

Therefore, the normal Operations manning complement is sufficient to complete the actions of AOP-10A while simultaneously containing and extinguishing a fire.

It is postulated that after approximately one hour, staff augmentation from the emergency response organization personnel will begin to be available to assist with the longer term actions necessary to maintain long term hot shutdown conditions

(i.e., changing out depleted nitrogen bottles, setting up the dedicated air compressor, etc.) and making repairs to support transition to cold shutdown.

NRC Question 9:

Describe the preventative maintenance program for the dedicated air compressor, electrical lines, and pneumatic hoses.

NMC Response:

The dedicated air compressor and associated equipment were inspected and tested shortly after being procured and staged in 2002. A preventative maintenance program based on the initial inspection and testing was recently created. This program calls for the compressor to be visually inspected (belts, guards, air filter, oil level, fasteners, etc.) and test run annually. This program also specifies a visual inspection of the electrical cords and pneumatic hoses. The associated procedure directs that the compressor be test run using an electrical cable reserved for post fire use. The test run checks for smooth operation, cycles the first and second stage relief valves, and verifies automatic cycling of the compressor with delivered air pressure. The first performance of this procedure is planned for May 2005.

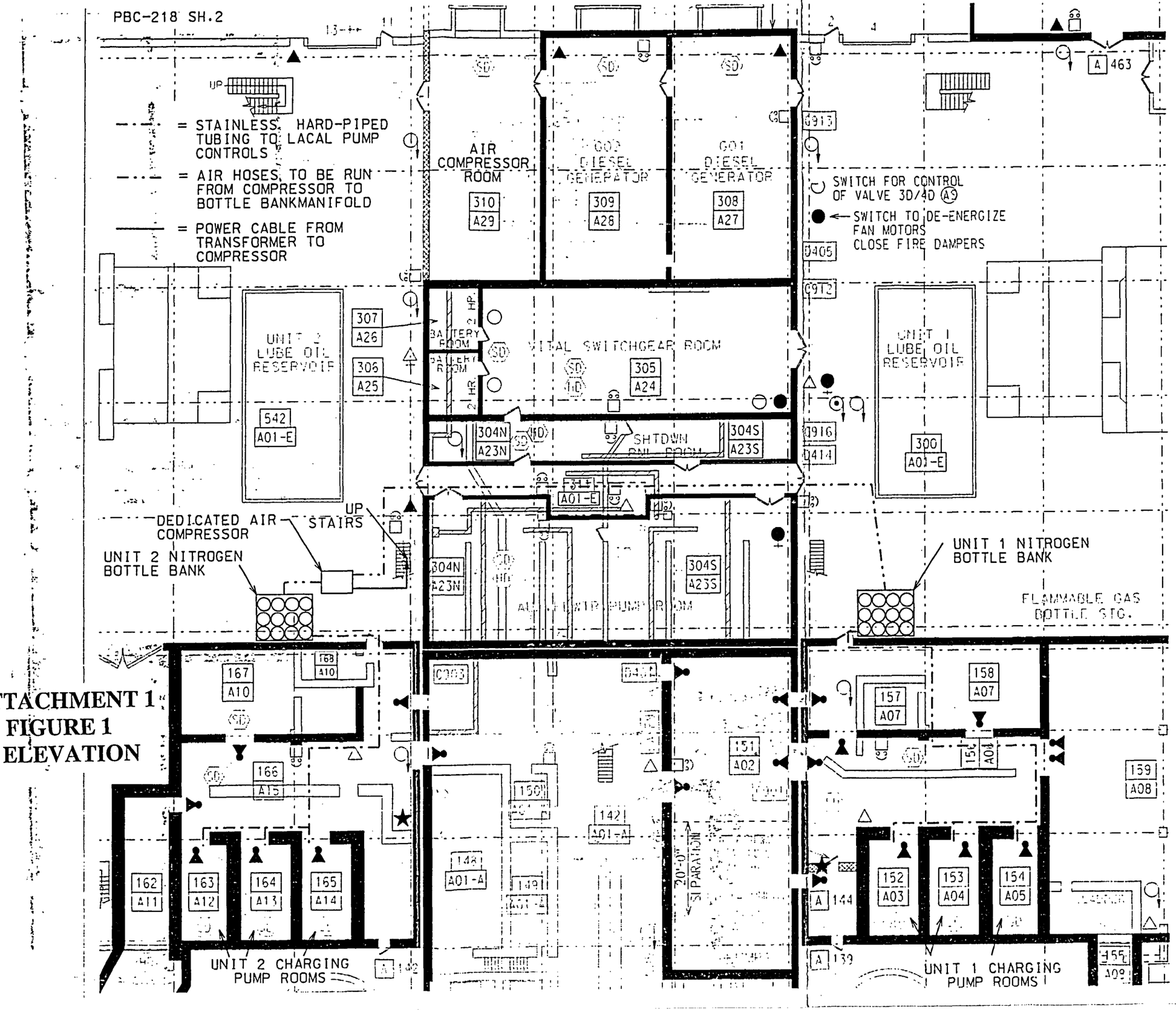

ATTACHMENT 1
FIGURE 1
8' ELEVATION

ATTACHMENT 1
FIGURE 2
26' ELEVATION

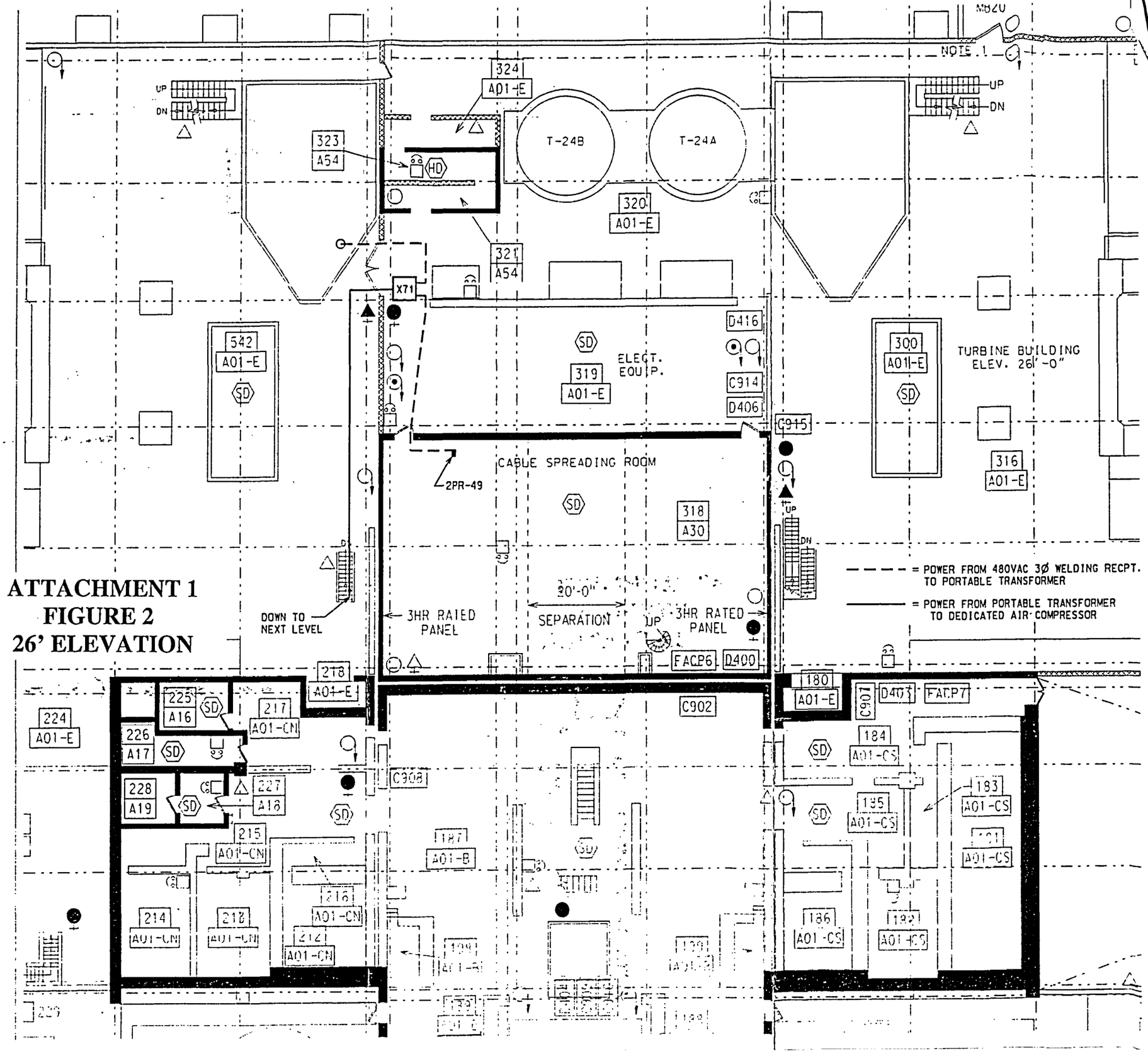

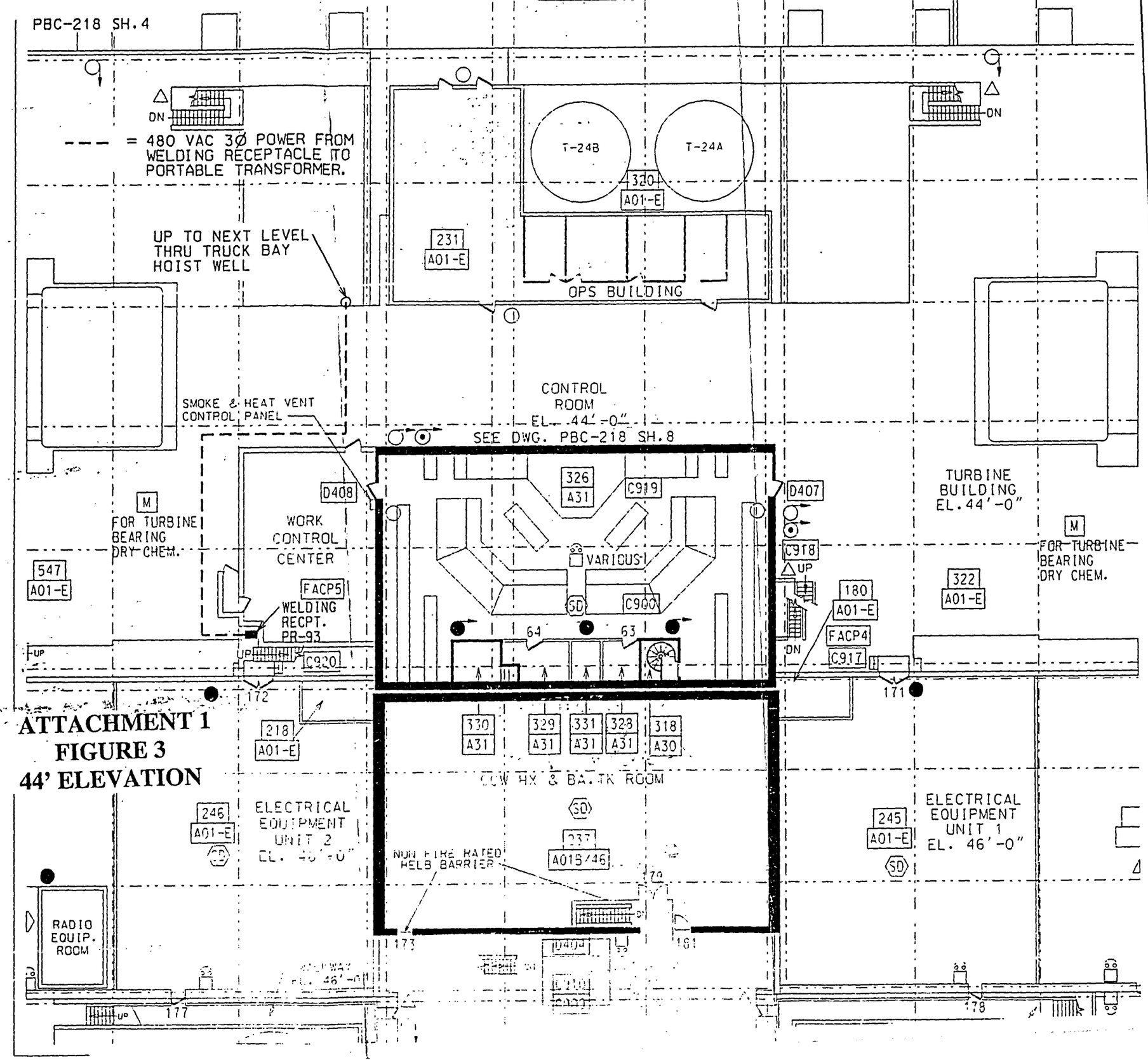

ATTACHMENT 1
FIGURE 3
44' ELEVATION

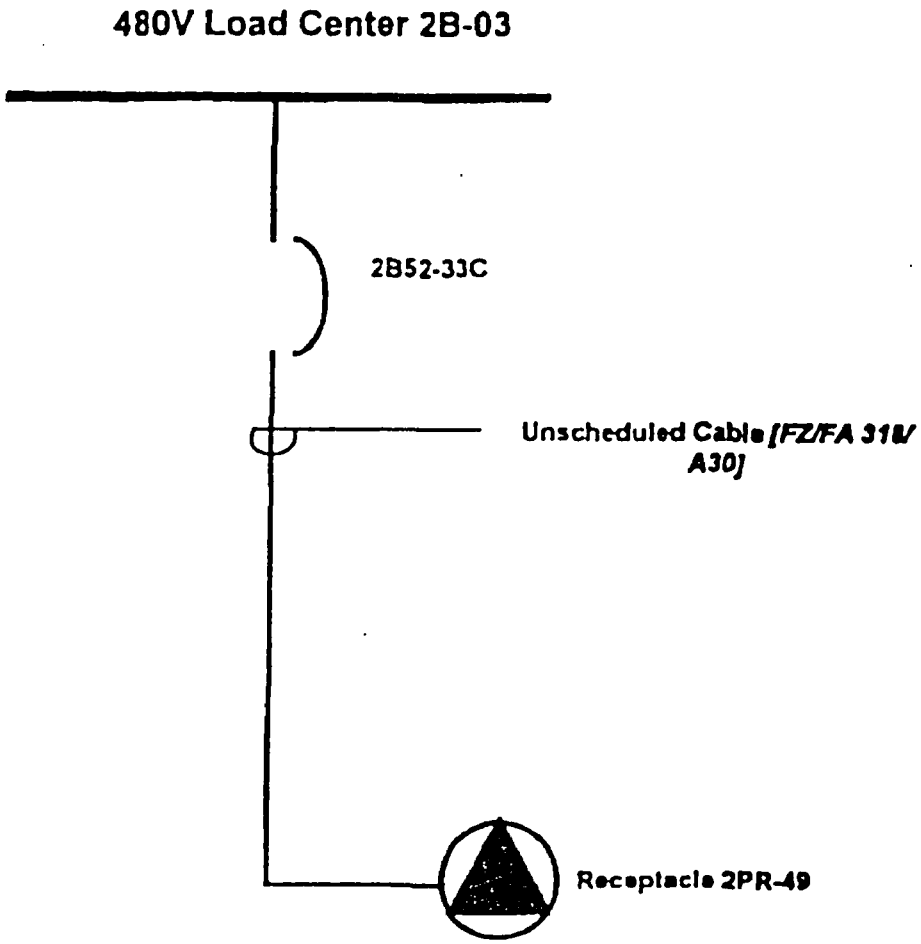

ATTACHMENT 2
FIGURE 1

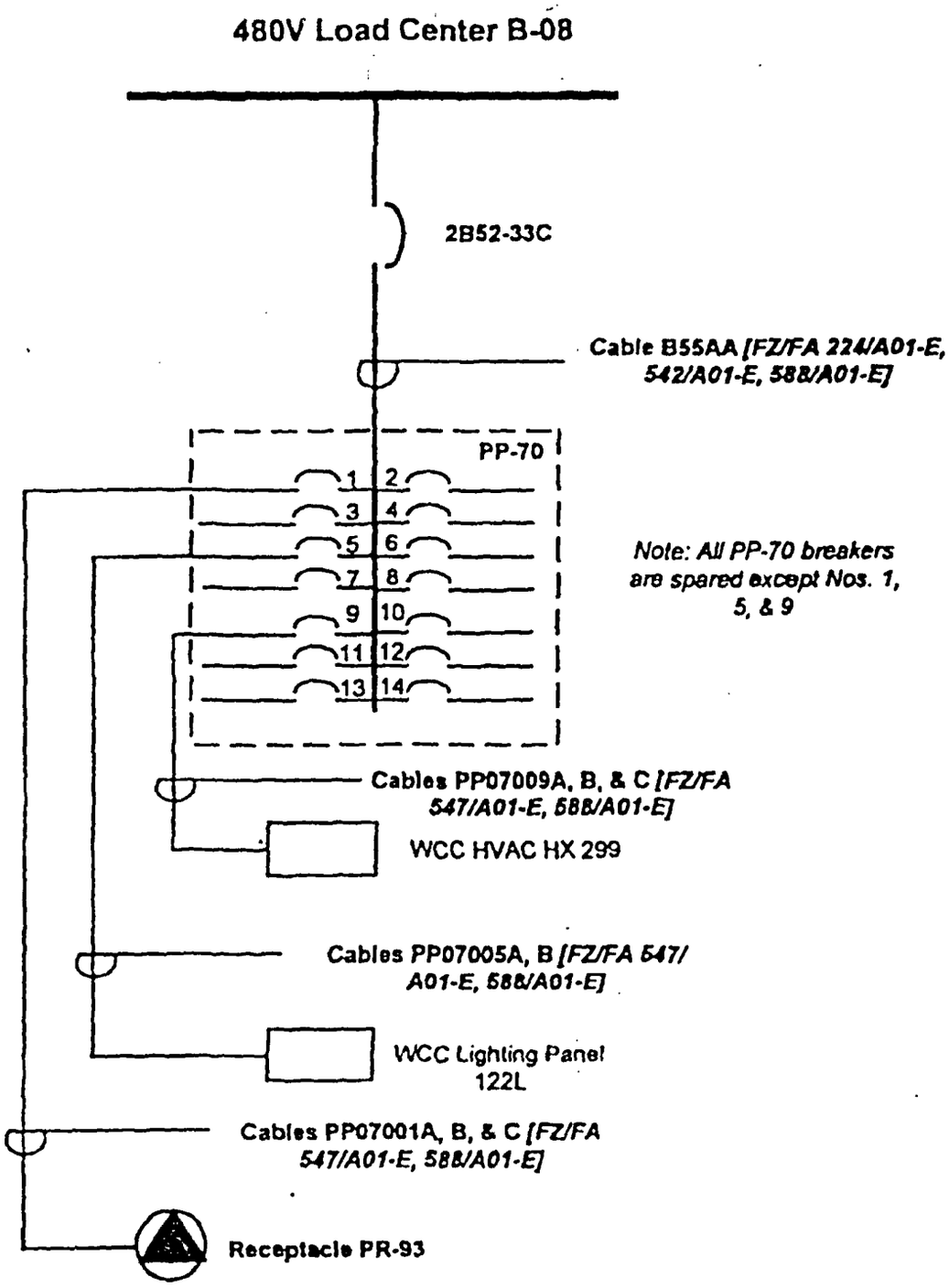

ATTACHMENT 2
FIGURE 2