SPARE TRANSFORMERS		
SERVICE	SCHEDULE NO.	APS NO.
START UP TRANSFORMER	AE-MAN-0045	T006
MAIN TRANSFORMER	AE-MAN-0051	T1129
MAIN TRANSFORMER	AE-MAN-0052	T1130
UNIT AUX TRANSFORMER	AE-MAN-1005	T1101
NORMAL SERVICE TRANSFORMER	AE-MAN-0015	T1005
ESF SERVICE TRANSFORMER	AE-MAN-0035	T1010

NOTES:

1. ALL EQUIPMENT WITHIN DASHED LINE IS QUALITY CLASS "D". ALL EQUIPMENT OUTSIDE DASHED LINE IS QUALITY CLASS "NOR OR SAS".
2. NUMBERS SHOWN IN PARENTHESIS ARE APS NUMBERS.

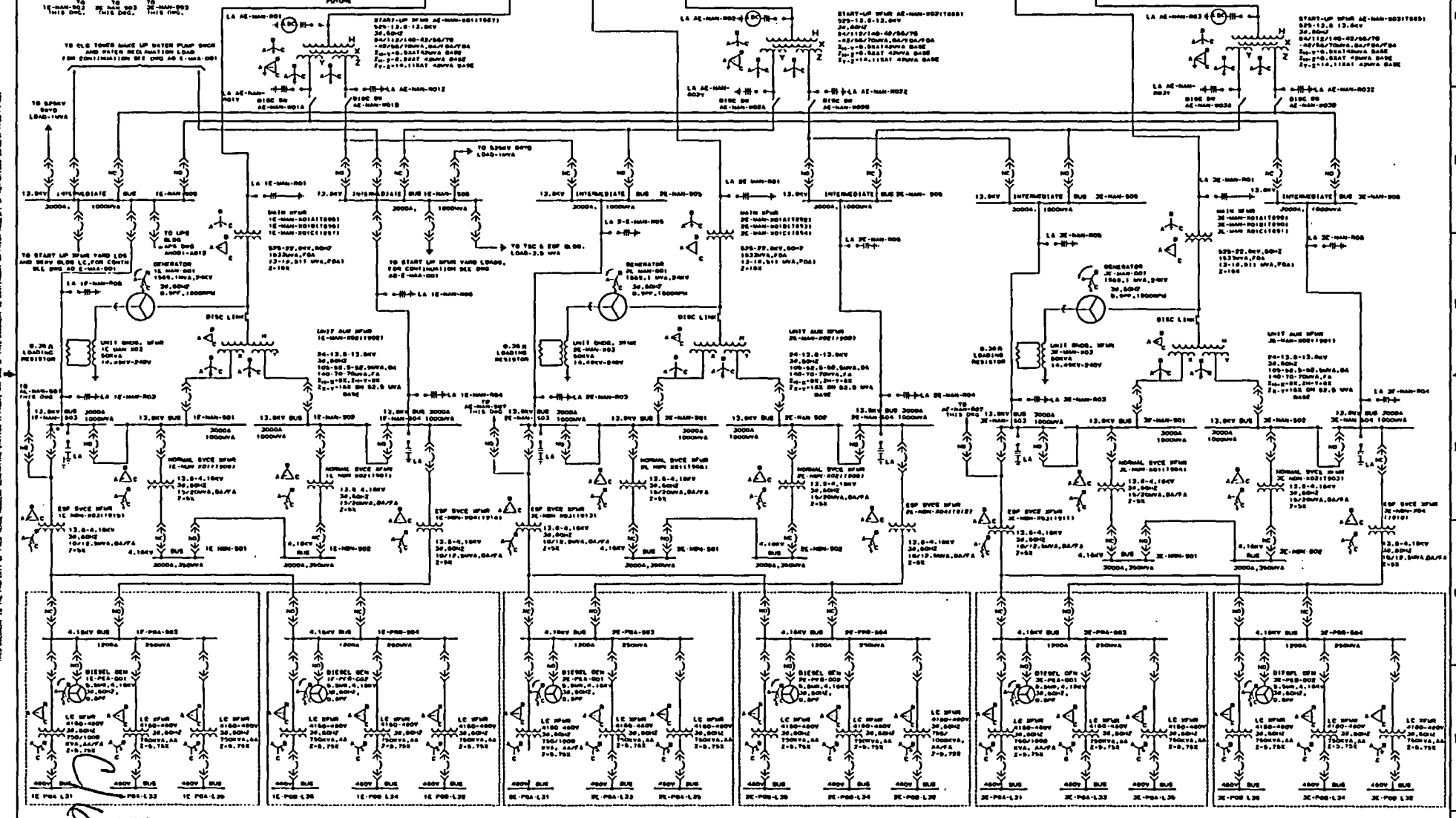

NUCLEAR SAFETY RELATED

0

Digitally signed by: Talbott, Betty S(299468)
Date: 04/02/2014 15:11:02
Reason: SIGNATURES ARE N/A
Location: RVNGS

PALO VERDE
NUCLEAR GENERATING STATION

MAIN SINGLE LINE DIAGRAM

SCALE	JOB NO.	DRAWING NO.	REV.
		13-E-MAA-001	21

DIRECT REVISION FOR DCN #2004-00375

"THIS DOCUMENT IS THE PROPERTY OF PALO VERDE NUCLEAR GENERATING STATION (PVNGS), AND USE OF THIS DOCUMENT IS CONTINGENT ON PRIOR RECEIPT OF AUTHORIZED CONSENT FROM PVNGS."