APS *A subsidiary of Pinnacle West Capital Corporation*

June 5, 2002

Ms. Nancy Bruce, Senior Project Manager, PVNGS
Mr. Steve Kessler, Electrical Engineering Section Leader, PVNGS
Mr. Harvey Leake, Senior Consulting Engineer, PVNGS
Mr. Stephen Peace, Owner Services Consultant, PVNGS

Dear Ms. Bruce and Messrs. Kessler, Leake, Peace:

Enclosed for your records is a copy of the final report for the 2002 Palo Verde/Hassayampa Operating Study: A Sensitivity Study Evaluating a Single-Line-to-Ground Fault at Palo Verde with 7% Generation Margin and 900 MVARs Bucking. Authored by Tom Isham of APS, this report represents the completion of a significant effort to identify the stability limits for the Palo Verde/Hassayampa Common Bus.

Should you have any questons on this matter, please contact Tom Isham at (602) 250-1499 or at Tommy.Isham@aps.com.

Sincerely,

Robert Smith

Digitally signed by 60326
cn=60326, ou=9714,
o=DEEG, c=US
Date: 2002.06.12 13:55:00
-07'00'
Reason: Received from APS
Transmission Operations
Harvey Leake

Cc: Tom Isham

A/11

2002 PALO VERDE/HASSAYAMPA SUPPLEMENTARY OPERATING STUDY REPORT

I. INTRODUCTION

This report documents a supplementary study to determine the plant operating limits for several new categories. Those categories include increased bucking of the Palo Verde generating units up to 780MVARs bucking and facilities initially out of service in the Palo Verde/Hassayampa area. The critical outage is the double line Palo Verde-Westwing outage initiated by a single-line-to-ground fault for all categories except one Palo Verde-Westwing line out. The fault and the lines were cleared in four cycles. The initially out of service categories included the following facilities:

Series Capacitors out of service in the following lines:

1. Hassayampa-North Gila-Imperial Valley-Miguel 500kV line
2. Hassayampa-North Gila 500kV line
3. North Gila-Imperial Valley-Miguel 500kV line
4. Palo Verde-Devers 500kV line two segments
5. Palo Verde-Devers 500kV line one segment out on the Arizona side

Lines out of service:

6. Hassayampa-North Gila 500kV line
7. Hassayampa-Kyrene 500kV line
8. Palo Verde-Devers 500kV line
9. One Palo Verde-Westwing 500kV line

With one Palo Verde-Westwing 500kV line out, the critical outage is loss of the remaining Westwing line but initiated by a three-phase fault. The single-line-to-ground fault only applies to a double line outage.

II. RESULTS/CONCLUSIONS

The original study was most limited by the light spring base case with the Palo Verde/Hassayampa units bucking and the double line outage of the Palo Verde-Westwing 500kV lines. The Light Spring base case with three Palo Verde units and all three new units (1600 MW of new generation) represented and the units bucking a total of approximately 450 MVARs was the starting point for this study. The voltage at Palo Verde was represented at 525kV, which again produced the most conservative results. The study results are summarized in Tables 1 through 4. A summary of the new operating limits for the new categories can be seen in Table 5 and Figure 1.

<u>All lines in service with Palo Verde units bucking up to 780MVARs.</u>

The original SLG study evaluated the Palo Verde units bucking up to 450MVARs. The results from that study indicated that the system was stable with 1600MW of additional generation. This study evaluated increasing the amount of bucking at Palo Verde from 450MVARs to 780MVARs. The results indicate that 1600MW of new generation for a

total of 5461MW of Palo Verde/Hassayampa generation can be realized up to 565MVARs bucking. Beyond 565MVARs, the total generation has to be reduced. A second point was found at 780MVARs bucking. At 780MVARs bucking, the total generation had to be reduced to 5361MW. From these two points, the operating nomogram shown in Figure 1 was obtained up to a total of 1000MVARs bucking. The powerflow base cases and stability results are summarized in Table 1.

Series capacitors initially-out-of-service.

The results for series capacitors initially out of service are summarized below. Tables 2 and 3 summarize the powerflow and stability results for all categories.

1. Hassayampa-North Gila-Imperial Valley-Miguel 500kV line

   With all the series compensation out of the Hassayampa to Miguel line(3 segments), the stability limit without unit tripping was reduced from 5461MW to 5261MW. An increase of 100MW more resulted in an unstable case. Unit tripping 500MW with the maximum generation output of 5461MW was stable.

   With two new units on at Hassayampa with 1100MW for a total of 4961MW, the single-line-to-ground fault and double line outage was stable.

2. Hassayampa-North Gila 500kV line

   With the series compensation out of the Hassayampa to North Gila line, the stability limit without unit tripping was reduced from 5461MW to 5411MW. The limitation was the 40-cycle voltage dip duration at the Palo Verde 500kV bus. Unit tripping 160MW with the maximum generation output of 5461MW was stable.

3. North Gila-Imperial Valley-Miguel 500kV line

   With the series compensation out of the North Gila to Miguel line, the stability limit without unit tripping was reduced from 5461MW to 5411MW. The limitation was the 40-cycle voltage dip duration at the Palo Verde 500kV bus. Unit tripping 160MW with the maximum generation output of 5461MW was stable.

4. Palo Verde-Devers 500kV line two segments

   With all the series compensation out of the Palo Verde to Devers line(2 segments), the stability limit without unit tripping was reduced from 5461MW to 5261MW. An increase of 100MW more resulted in an unstable case. Unit tripping 500MW with the maximum generation output of 5461MW was stable.

   With two new units on at Hassayampa with 1100MW for a total of 4961MW, the single-line-to-ground fault and double line outage was stable.

5. Palo Verde-Devers 500kV line one segment out on the Arizona side

   With the series compensation segment out of the Palo Verde to Devers line on the Arizona side of the line, the stability limit without unit tripping was reduced from 5461MW to 5361MW. The limitation was the 40-cycle voltage dip duration at the

Palo Verde 500kV bus. Unit tripping 320MW with the maximum generation output of 5461MW was stable.

Lines out of service:

6. Hassayampa-North Gila 500kV line

With the Hassayampa to North Gila line initially out of service, the stability limit is 3601MW. An increase of 100MW more resulted in an unstable case. This was with the Palo Verde generating units bucking a net 300MVARs.

7. Hassayampa-Kyrene 500kV line

With the Hassayampa to Kyrene line initially out of service, the stability limit is 3152MW. An increase of 50MW more resulted in an unstable case. This was with the Palo Verde generating units bucking a net 235MVARs.

8. Palo Verde-Devers 500kV line

With the Palo Verde to Devers line initially out of service, the stability limit is 3701MW. An increase of 100MW more resulted in an unstable case. This was with the Palo Verde generating units bucking a net 294MVARs.

9. One Palo Verde-Westwing 500kV line

For this category, the critical outage is loss of the remaining Palo Verde-Westwing line initiated by a three-phase fault at Palo Verde. With the three new units on line, the stability limit was 5111MW, 1250MW above the 3861MW maximum Palo Verde generation level. This was with the Palo Verde generating units bucking a net 230MVARs. This was consistent with the original all lines in service operating study that evaluated a three-phase fault with the double line outage. The results for two units were taken from that original study. The stability limit with two units generating 790MW was 4651MW. This was with the Palo Verde generating units bucking a net 363MVARs. Unit tripping was not applied. The result for one unit was taken from that original study. The stability limit with one unit generating 410MW was 4271MW. This was with the Palo Verde generating units bucking a net 321MVARs. Unit tripping was not applied.

FIGURE 1
2002 PALO VERDE/HASSAYAMPA OPERATING LIMITS WITH UP TO THREE NEW UNITS ON LINE (MAXIMUM 1600 MW)

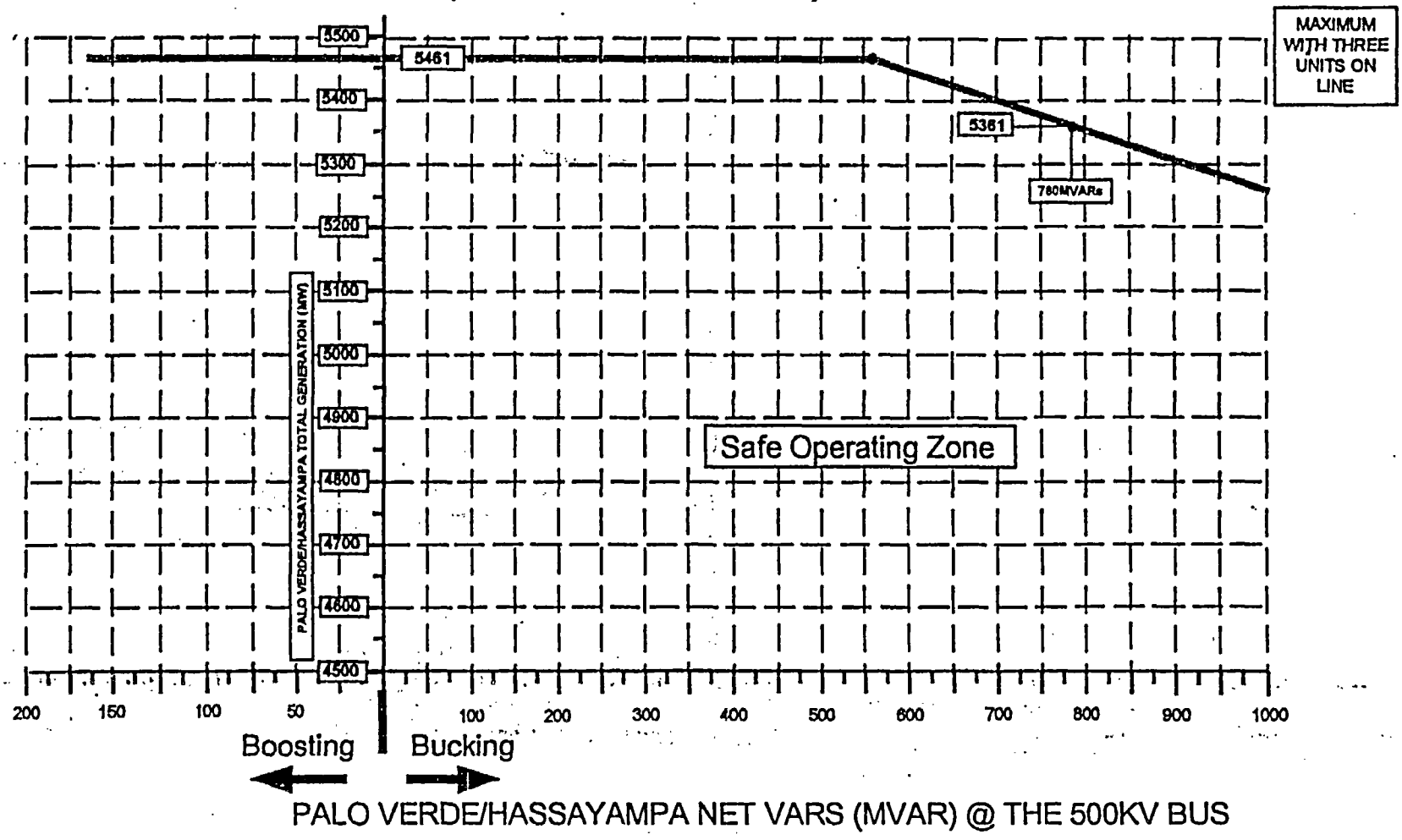

TABLE 1

2002 SINGLE-LINE-TO-GROUND SUPPLEMENTARY STABILITY STUDY SUMMARY

ALL LINES IN SERVICE

SE O.	PRE-PROJECT CASE DESCRIPTION	POWER FLOW (MW) SCIT FLOW	EOR FLOW	PDCI FLOW	PV-HASS VAR FLOW	PV GEN GROSS	PV NET VARS	HASS NET VARS	NEW GEN	PV WEST	PV EAST	PV/HSP TOT	COMMENTS
	A - (02LSP-567ME1600)	10522	3977	1858	-168	4056	-567	-9	1600	1980	3473	5453	2 REDHAWK + 1 ARLINGTON
	B - (02LSP-780ME1500)	10524	3986	1859	-31	4056	-781	3	1500	1970	3383	5353	2 REDHAWK + 1 ARLINGTON

	STABILITY RESULTS BUS	Vdip	%	COMMENTS
BASSLG FLT TWO PV-WWG	PV500	0.620	21.9%	Stable and well damped; another 50MVARs unstable
BASSLG FLT TWO PV-WWG	PV500	0.745	29.0%	Stable and well damped; another 50MW unstable

TABLE 2

2002 SINGLE-LINE-TO-GROUND STUDY SUMMARY

PALO VERDE/HASSAYAMPA POWER FLOW SUMMARY TABLE

CASE NO.	PRE-PROJECT CASE DESCRIPTION	POWER FLOW (MW)											COMMENTS
		SCIT FLOW	EOR FLOW	PDCI FLOW	PV-HASS VAR FLOW	PV GEN GROSS	PV NET VARS	HASS NET VARS	NEW GEN	PV WEST	PV EAST	PV/HSP TOT	
	A - (02LSP-450ME1600)	10522	3979	1859	-111	4056	-429	-9	1600	1982	3471	5453	2 REDHAWK + 1 ARLINGTON
	B - (02LSP-HASNIGSC1400)	10525	3928	1859	-195	4056	-462	-6	1400	1805	3448	5253	2 REDHAWK + 1 ARLINGTON
	B1 - (02LSP-HASNIGSC)	10525	3946	1859	-175	4056	-441	-9	1600	1830	3623	5453	2 REDHAWK + 1 ARLINGTON
	B2 - (02LSP-HASNIGSC1100)	10525	3905	1859	-109	4056	-483	-15	1100	1774	3159	4933	1 REDHAWK + 1 ARLINGTON
	C - (02LSP-HASNGSC1550)	10528	3948	1857	-132	4056	-450	-3	1550	1881	3522	5403	2 REDHAWK + 1 ARLINGTON
	C1 - (02LSP-HASNGSC)	10528	3955	1848	-105	4056	-393	-9	1600	1888	3565	5453	2 REDHAWK + 1 ARLINGTON
	D - (02LSP-NGMIGSC1550)	10520	3960	1847	-201	4056	-495	-4	1550	1897	3506	5403	2 REDHAWK + 1 ARLINGTON
	D1 - (02LSP-NGMIGSC)	10521	3964	1847	-192	4056	-483	-9	1600	1902	3551	5453	2 REDHAWK + 1 ARLINGTON
	E - (02LSP-PVDVSC1400)	10522	3928	1847	15	4056	-441	6	1400	1722	3531	5253	2 REDHAWK + 1 ARLINGTON
	E1 - (02LSP-PVDVSC)	10522	3944	1847	22	4056	-450	-9	1600	1745	3708	5453	2 REDHAWK + 1 ARLINGTON
	E2 - (02LSP-PVDVSC1100)	10522	3903	1847	17	4056	-468	-15	1100	1693	3240	4933	1 REDHAWK + 1 ARLINGTON
	F - (02LSP-PVDV1SC1500)	10522	3947	1847	9	4056	-462	-9	1500	1808	3545	5353	2 REDHAWK + 1 ARLINGTON
	F1 - (02LSP-PVDV1SC)	10522	3955	1847	9	4056	-438	-9	1600	1817	3636	5453	2 REDHAWK + 1 ARLINGTON
	G - (02LSP-HANG3601)	10291	3497	1847	-75	3856	-311	-24	0	1099	2502	3601	
	H - (02LSP-HAKYR3152)	10269	3651	1847	48	3406	-233	-24	0	1705	1448	3153	
	I - (02LSP-PVDV3701)	10243	3514	1847	13	3556	-195	-24	0	979	2722	3701	

TABLE 3

2002 SINGLE-LINE-TO-GROUND STUDY SUMMARY

PALO VERDE/HASSAYAMPA STABILITY SUMMARY TABLE

		STABILITY RESULTS			COMMENTS
		BUS	Vdip	%	
ST-1 BASE A*	SLG FLT TWO PV-WWG	PV500	0.840	20.0%	Stable and well damped
ST-2 BASE B	SLG FLT TWO PV-WWG	PV500	0.790	24.8%	Stable and well damped; unstable with 100MW more
ST-3 BASE B1	SLG FLT 2 PV-WWG OUT U/T RED 500MW	PV500	0.770	26.7%	Stable and well damped
ST-4 BASE B2	SLG FLT 2 PV-WWG OUT	PV500	0.760	27.6%	Stable and well damped
ST-5 BASE C	SLG FLT TWO PV-WWG	PV500	0.76	27.6%	Stable and well damped; 40 cycle duration
ST-6 BASE C1	SLG FLT 2 PV-WWG OUT U/T RED 160MW	PV500	0.78	25.7%	Stable and well damped
ST-7 BASE D	SLG FLT TWO PV-WWG	PV500	0.78	25.7%	Stable and well damped; 36 cycle duration
ST-8 BASE D1	SLG FLT 2 PV-WWG OUT U/T RED 160MW	PV500	0.79	24.8%	Stable and well damped
ST-9 BASE E	SLG FLT TWO PV-WWG	PV500	0.780	25.7%	Stable and well damped; 40 cycle duration
ST-10 BASE E1	SLG FLT 2 PV-WWG OUT U/T RED 500MW	PV500	0.750	28.6%	Stable and well damped; 40 cycle duration
ST-11 BASE E2	SLG FLT 2 PV-WWG OUT	PV500	0.770	26.7%	Stable and well damped
ST-12 BASE F	SLG FLT TWO PV-WWG	PV500	0.780	25.7%	Stable and well damped; 38 cycle duration
ST-13 BASE F1	SLG FLT 2 PV-WWG OUT U/T RED 320MW	PV500	0.780	25.7%	Stable and well damped; 40 cycle duration
ST-14 BASE G	SLG FLT TWO PV-WWG	PV500	0.770	26.7%	Stable and well damped; unstable with 100MW more
ST-15 BASE H	SLG FLT TWO PV-WWG	PV500	0.820	21.9%	Stable and well damped; unstable with 50MW more
ST-16 BASE I	SLG FLT TWO PV-WWG	PV500	0.750	28.6%	Stable and well damped; unstable with 100MW more

* Base case identifying letter can be found in Table 2.

TABLE 4

2002 SINGLE-LINE-TO-GROUND SUPPLEMENTARY STABILITY STUDY SUMMARY

ONE PALO VERDE-WESTWING 500KV LINE INITIALLY OUT OF SERVICE

CASE NO.	PRE-PROJECT CASE DESCRIPTION	POWER FLOW (MW) SCIT FLOW	EOR FLOW	PDCI FLOW	PV-HASS VAR FLOW	PV GEN GROSS	PV NET VARS	HASS NET VARS	NEW GEN	PV WEST	PV EAST	PV/HSP TOT	COMMENTS
	J - (02LSP-231PV1WW1250)	10522	3968	1858	-120	4058	-231	14	1250	2073	3030	5103	2 REDHAWK + 1 ARLINGTON
	K - (02LSP-R450A360)*	10271	3721	1859	-32	4056	-363	-28	810	1774	2877	4651	1 REDHAWK + 1 ARLINGTON
	L - (02LSP-1R450)*	10271	3669	1859	-16	4056	-321	-25	450	1721	2550	4271	1 REDHAWK or 1 ARLINGTON

	STABILITY RESULTS BUS	Vdip	%	COMMENTS
1 BASE J 3P FLT PV-WWG OUT	PV500	0.820	21.9%	Stable and well damped; another 50MW unstable
2 BASE K* 3P FLT PV-WWG OUT	PV500	0.720	31.4%	Stable and well damped; another 50MW unstable
3 BASE L* 3P FLT PV-WWG OUT	PV500	0.730	30.5%	Stable and well damped; another 50MW unstable

* Results taken from original study titled "2002 Palo Verde/Hassayampa Operating Study".

TABLE 5

2002 SINGLE-LINE-TO-GROUND SUPPLEMENTARY STUDY OPERATING LIMITS

CATEGORY	Maximum Net Generation Level at :			Total Generation	Amount of Hass. Generation required to tripped
	Palo Verde	Hassayampa	# of New Units		
All lines in service	3861	1600	3	5461(-565MVARs)	N/A
All lines in service (See Nomogram in Figure 1)	3861	1500	3	5361(-780MVARs)	N/A
	3861	1400	3	5261	N/A
Hassayampa-Miguel	3861	1600	3	5461	660
series comp. Bypassed	3861	1100	2	4961	N/A
Hassayampa-N.Gila	3861	1550	3	5411	320
series comp. Bypassed	3861	1600	3	5461	N/A
N.Gila-Miguel	3861	1550	3	5411	320
series comp. Bypassed	3861	1600	3	5461	N/A
Palo Verde-Devers	3861	1400	3	5261	N/A
series comp.	3861	1600	3	5461	660
Bypassed(2 segments)	3861	1100	2	4961	N/A
Palo Verde-Devers series comp.	3861	1500	3	5361	500
Bypassed(1 seg. in AZ)	3861	1600	3	5461	N/A
Hassa.-N.Gila line initially out of service	3601	0	0	3601	N/A
Hassa.-Kyrene line initially out of service	3152	0	0	3152	N/A
PV-Devers line initially out of service	3701	0	0	3701	N/A
	3861	1250	3	5111	N/A
One PV-WWG line	3861	790*	2	4741	N/A
initially out of service	3861	410*	1	4271	N/A

* Obtained from the orignal study titled "2002 Palo Verde/Hassayampa Operating Study".

Arizona 500 & 345kV EHV System

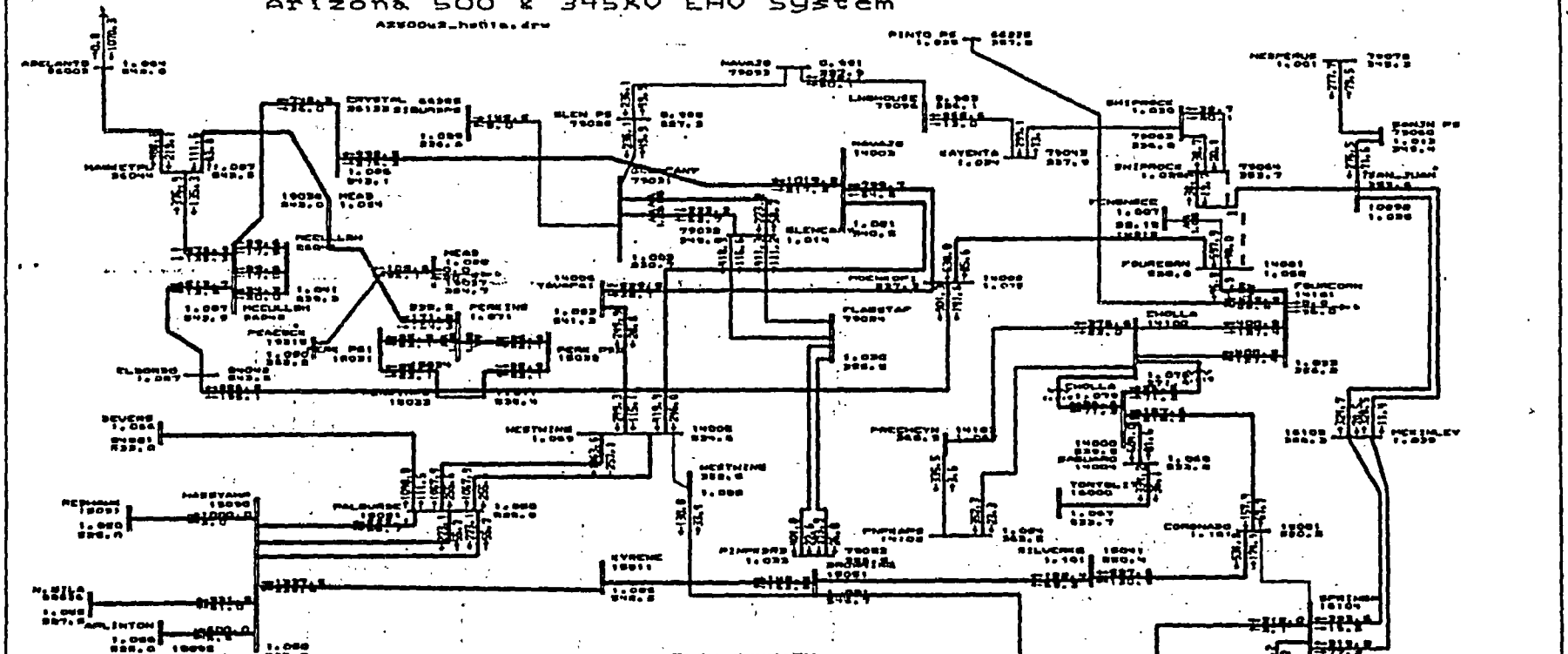

GENERATION

CORONADO	400.00
CHOLLA	555.00
EMA HYDRO	0.00
FOURCORN	1760.00
HOOVER	549.04
MOHAVE	750.00
NAVAJO	3412.00
PALOVERDE	4086.00
SAN JUAN	1101.14
SPRINGERV	570.00
GRIFITH	100.00
SOPOINT	100.00
MERCHANT	465.00
DSM GEN	0.00
APL GEN	550.10
REDHAWK	1040.00

230KV VOLTAGES

KYRENE	1.08
PNPKAPS	1.08
WESTWING	1.07
SILVERKS	1.07
MEAD	1.05
SAG(118)	1.07
DEVERS	1.08
LUGO	1.01

FLOW SUMMARY

EOR	3976.67
WOR (TOTAL)	4727.02
WOR (NORTH)	2812.61
MIDWAY-VINCENT	2094.68
KRAMER-LUGO	225.94
SOCAL IMPORT	10523.57
PDCI	1858.46
COI	2691.20
PEN WEST	1445.14
NE/SE	857.05
SIGURD/RED BUTTE	233.89

PALO VERDE TOTAL	5452.96
PALO VERDE WEST	1979.72
PALO VERDE EAST	3473.24

General Electric International, Inc. PSLF Program

01	APS TRANSMISSION OPERATIONS	WESTERN SYSTEMS COORDINATING COUNCIL 2002 LSP2 OPERATING CASE MAY 11, 2001	A-02LSP-567ME1600

Wed May 15 19:20:52 2002
c:\ops\stab\az500_hassyamps.dr
c:\ops\stab\02lsp-567me1600.sa
Rating = 1

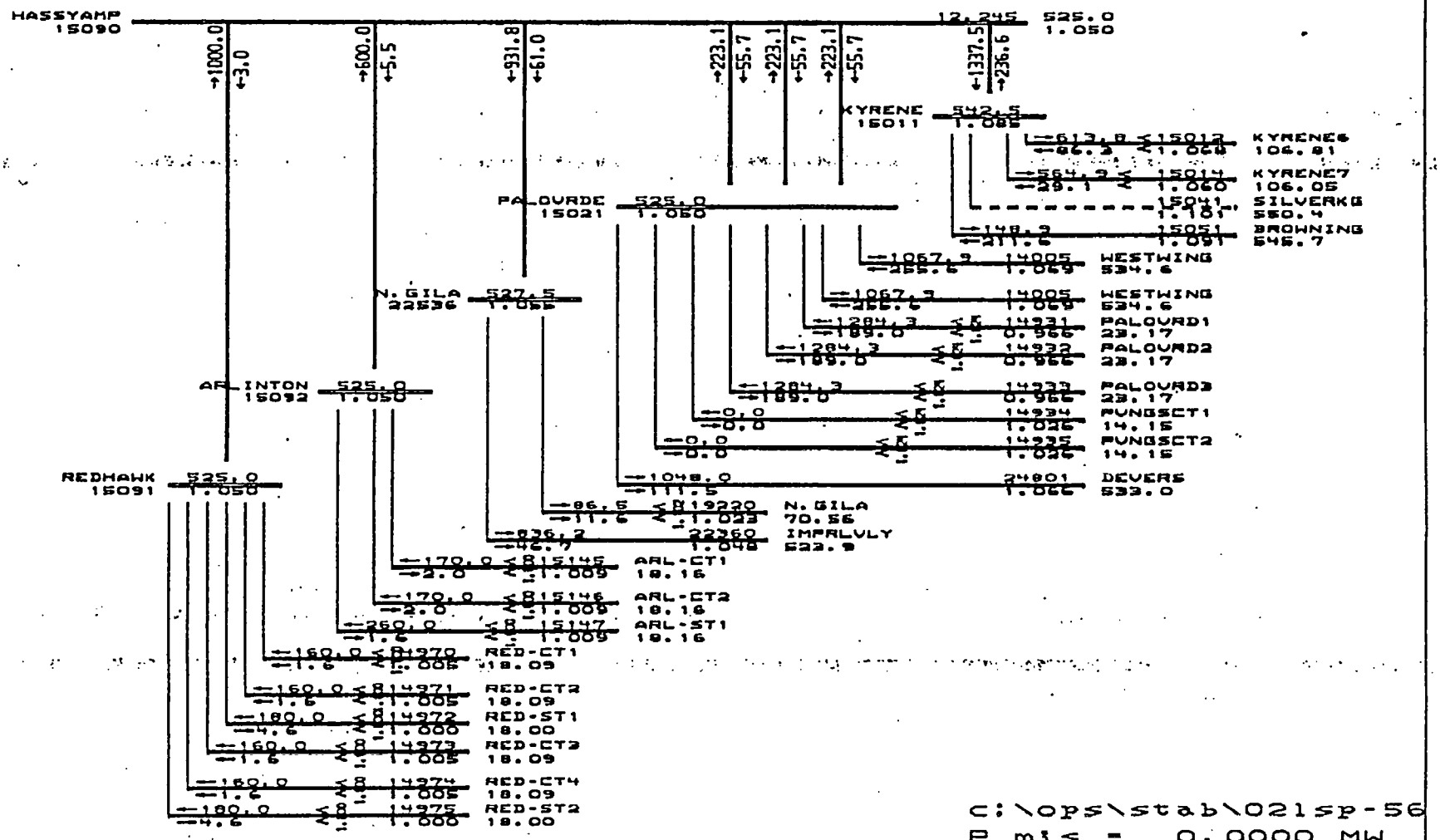

General Electric International, Inc. PSLF Program

APS TRANSMISSION OPERATIONS

WESTERN SYSTEMS COORDINATING COUNCIL
2002 LSP2 OPERATING CASE
MAY 11, 2001

c:\ops\stab\b2500_hassyamps.dr
c:\ops\stab\021sp-567mc1600.sa
Rating = 1

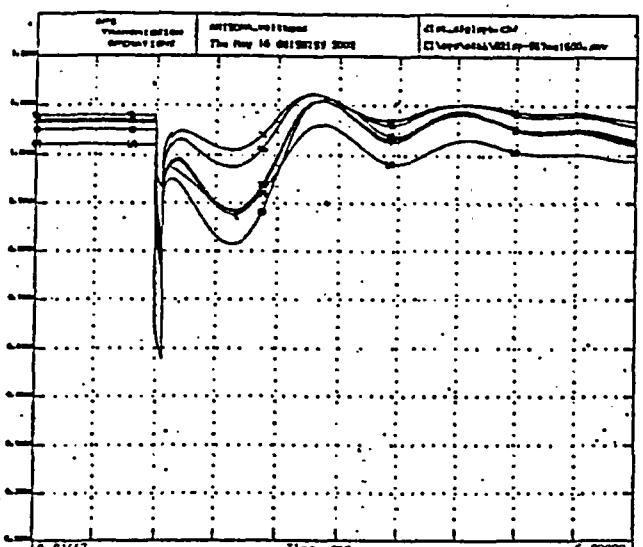

WESTERN SYSTEMS COORDINATING COUNCIL
2000 LSP3 OPERATING CASE
MAY 11, 2001
STAB, SLG FAULT ON PV 500 KV BUS;TRIP PV-MAE OUT;9 C CLR FLT W/PV-MAE;
TC TRIP RCSO,ARLO,SOX DIRECT. PATH05;COLSP21.SYS

COMMENTS DUE TO AREA COORDINATORS MAY 18, 2001
AREA COORDINATOR COMMENTS DUE TO STAFF MAY 25, 2001

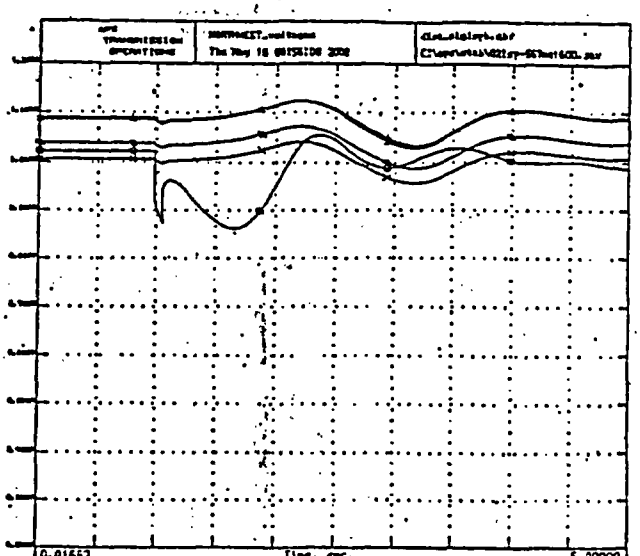

WESTERN SYSTEMS COORDINATING COUNCIL
2000 LSP3 OPERATING CASE
MAY 11, 2001
STAB, SLG FAULT ON PV 500 KV BUS;TRIP PV-MAE OUT;9 C CLR FLT W/PV-MAE;
TC TRIP RCSO,ARLO,SOX DIRECT. PATH05;COLSP21.SYS

COMMENTS DUE TO AREA COORDINATORS MAY 18, 2001
AREA COORDINATOR COMMENTS DUE TO STAFF MAY 25, 2001

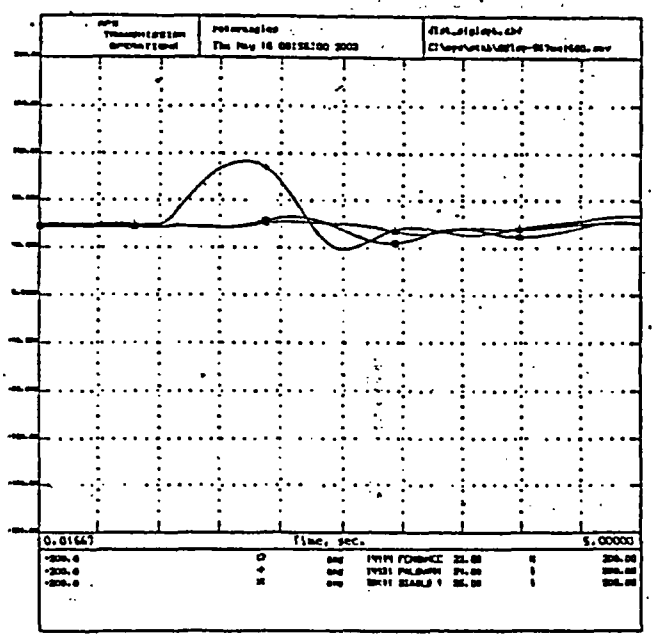

WESTERN SYSTEMS COORDINATING COUNCIL
2000 LSP3 OPERATING CASE
MAY 11, 2001
STAB, SLG FAULT ON PV 500 KV BUS;TRIP PV-MAE OUT;9 C CLR FLT W/PV-MAE;
TC TRIP RCSO,ARLO,SOX DIRECT. PATH05;COLSP21.SYS

COMMENTS DUE TO AREA COORDINATORS MAY 18, 2001
AREA COORDINATOR COMMENTS DUE TO STAFF MAY 25, 2001

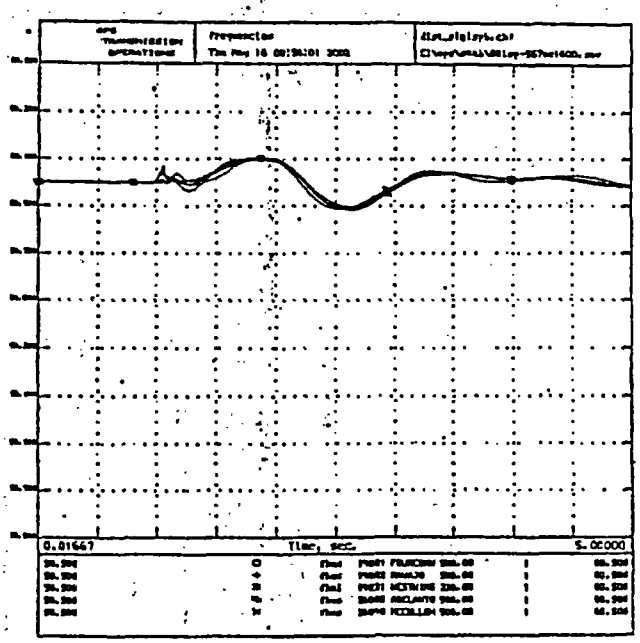

WESTERN SYSTEMS COORDINATING COUNCIL
2000 LSP3 OPERATING CASE
MAY 11, 2001
STAB, SLG FAULT ON PV 500 KV BUS;TRIP PV-MAE OUT;9 C CLR FLT W/PV-MAE;
TC TRIP RCSO,ARLO,SOX DIRECT. PATH05;COLSP21.SYS

COMMENTS DUE TO AREA COORDINATORS MAY 18, 2001
AREA COORDINATOR COMMENTS DUE TO STAFF MAY 25, 2001

Arizona 500 & 345kV EHV System

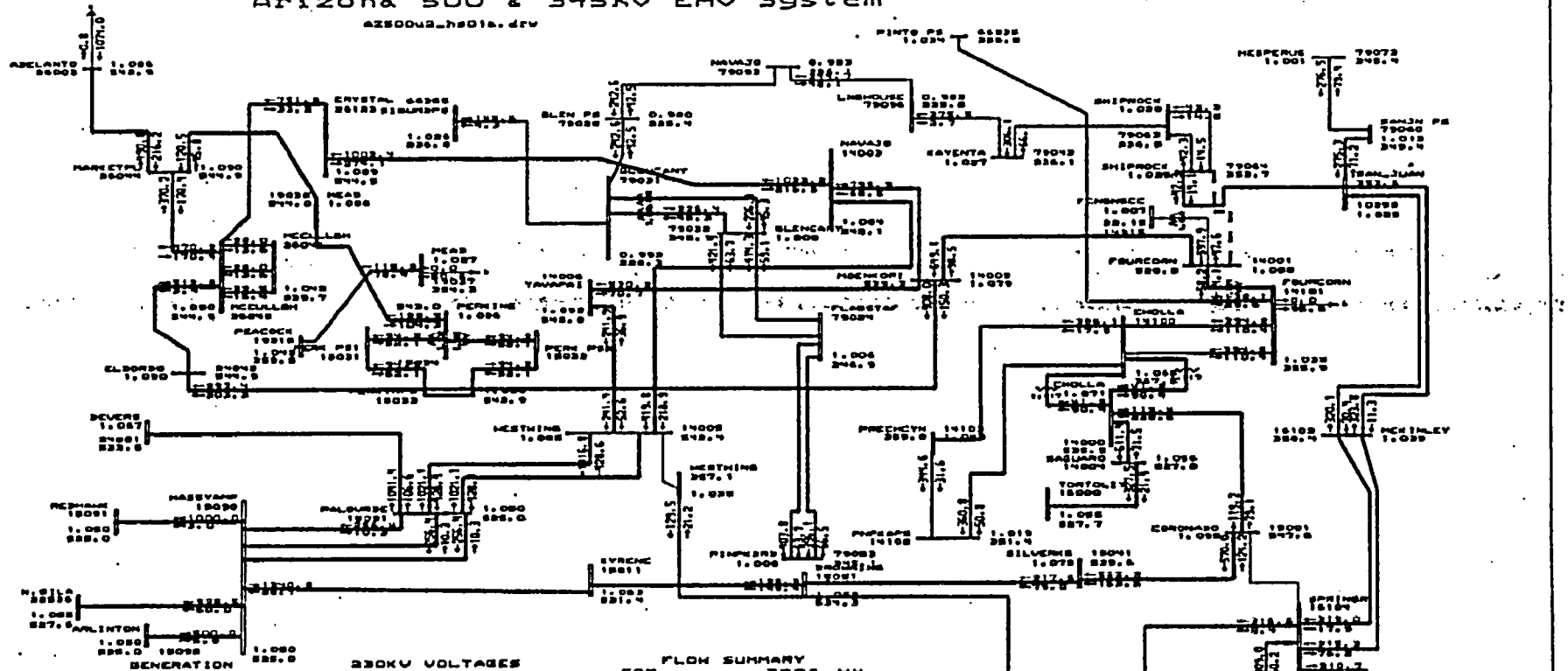

General Electric International, Inc. PSLF Program

13 APS TRANSMISSION OPERATIONS

WESTERN SYSTEMS COORDINATING COUNCIL
2002 LSP2 OPERATING CASE
MAY 11, 2001

B- 02 LSP- 780 ME 1500

Thu May 16 09:06:09 2002
c:\ops\stab\az500_hassyampa.dr
c:\ops\stab\02lsp-780me1500.sa
Rating = 1

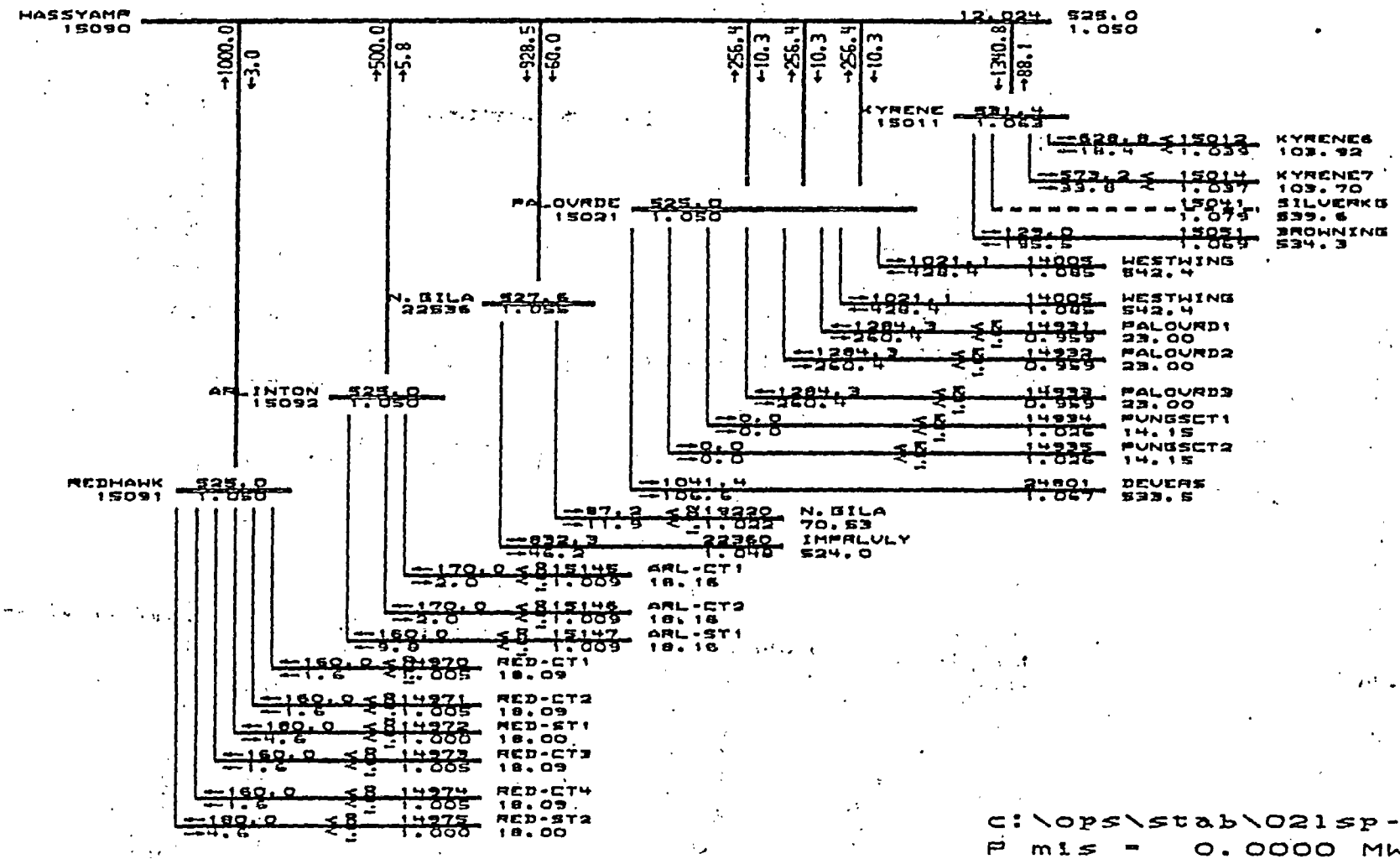

General Electric International, Inc. PSLF Program MW/MVAR Thu May 16 09:05:59 2002

APS TRANSMISSION OPERATIONS

WESTERN SYSTEMS COORDINATING CONCEL
2002 LSP2 OPERATING CASE
MAY 11, 2001

c:\ops\stab\az500_hassyampa.dr
c:\ops\stab\021sp-78bmc1500.sa
Rating = 1

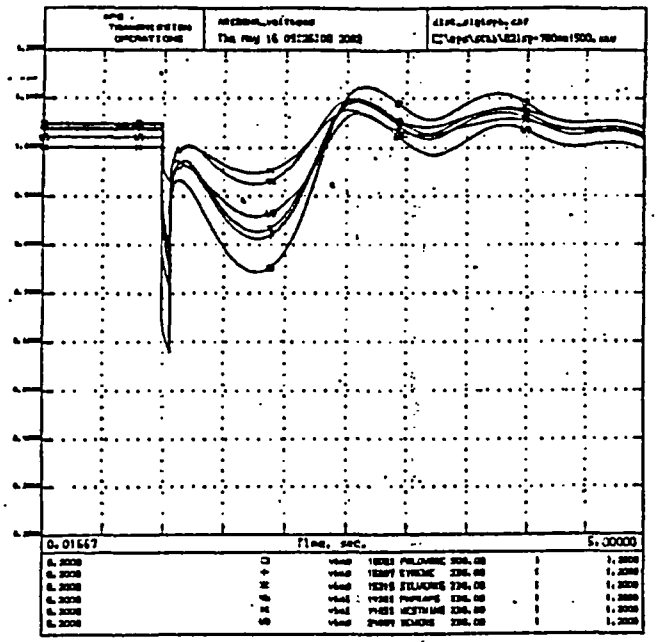

WESTERN SYSTEMS COORDINATING COUNCIL
2002 LSP2 OPERATING CASE
MAY 11, 2001
STAB, SLG FAULT ON PV 500 KV BUS;TWO PH-GND OUT;9 C CLR FLT W/PH-GND
%C TRIP RCBO,ARLB,20% INDUCT. MOTORS;OBLSP21.SYD

COMMENTS DUE TO AREA COORDINATORS MAY 18, 2001
AREA COORDINATOR COMMENTS DUE TO STAFF MAY 25, 2001

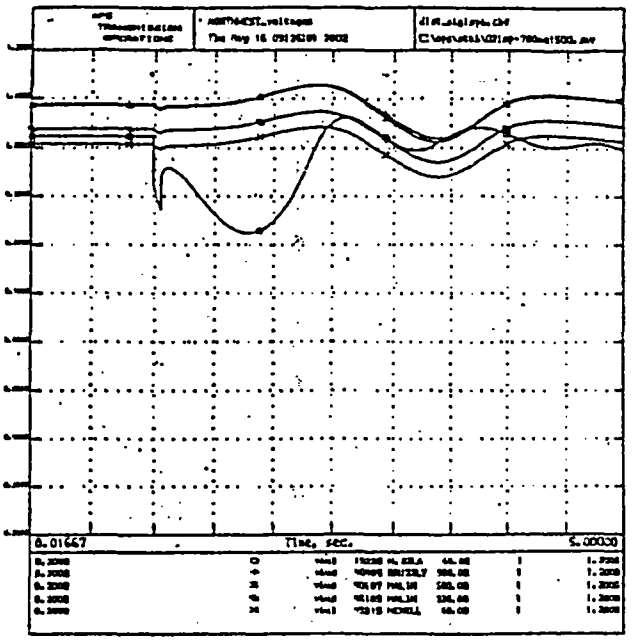

WESTERN SYSTEMS COORDINATING COUNCIL
2002 LSP2 OPERATING CASE
MAY 11, 2001
STAB, SLG FAULT ON PV 500 KV BUS;TWO PH-GND OUT;9 C CLR FLT W/PH-GND
%C TRIP RCBO,ARLB,20% INDUCT. MOTORS;OBLSP21.SYD

COMMENTS DUE TO AREA COORDINATORS MAY 18, 2001
AREA COORDINATOR COMMENTS DUE TO STAFF MAY 25, 2001

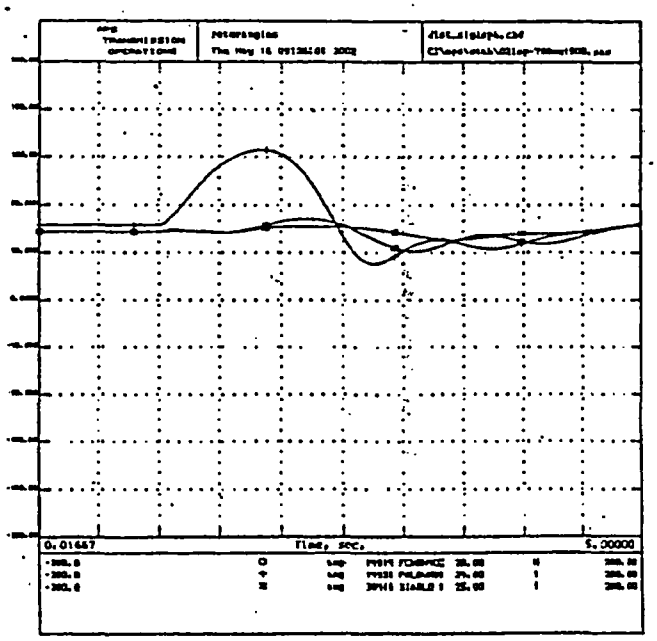

WESTERN SYSTEMS COORDINATING COUNCIL
2002 LSP2 OPERATING CASE
MAY 11, 2001
STAB, SLG FAULT ON PV 500 KV BUS;TWO PH-GND OUT;9 C CLR FLT W/PH-GND
%C TRIP RCBO,ARLB,20% INDUCT. MOTORS;OBLSP21.SYD

COMMENTS DUE TO AREA COORDINATORS MAY 18, 2001
AREA COORDINATOR COMMENTS DUE TO STAFF MAY 25, 2001

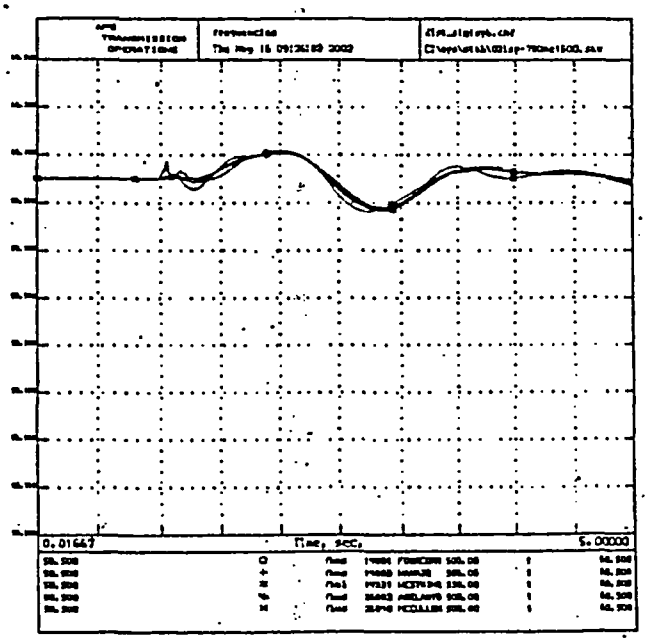

WESTERN SYSTEMS COORDINATING COUNCIL
2002 LSP2 OPERATING CASE
MAY 11, 2001
STAB, SLG FAULT ON PV 500 KV BUS;TWO PH-GND OUT;9 C CLR FLT W/PH-GND
%C TRIP RCBO,ARLB,20% INDUCT. MOTORS;OBLSP21.SYD

COMMENTS DUE TO AREA COORDINATORS MAY 18, 2001
AREA COORDINATOR COMMENTS DUE TO STAFF MAY 25, 2001

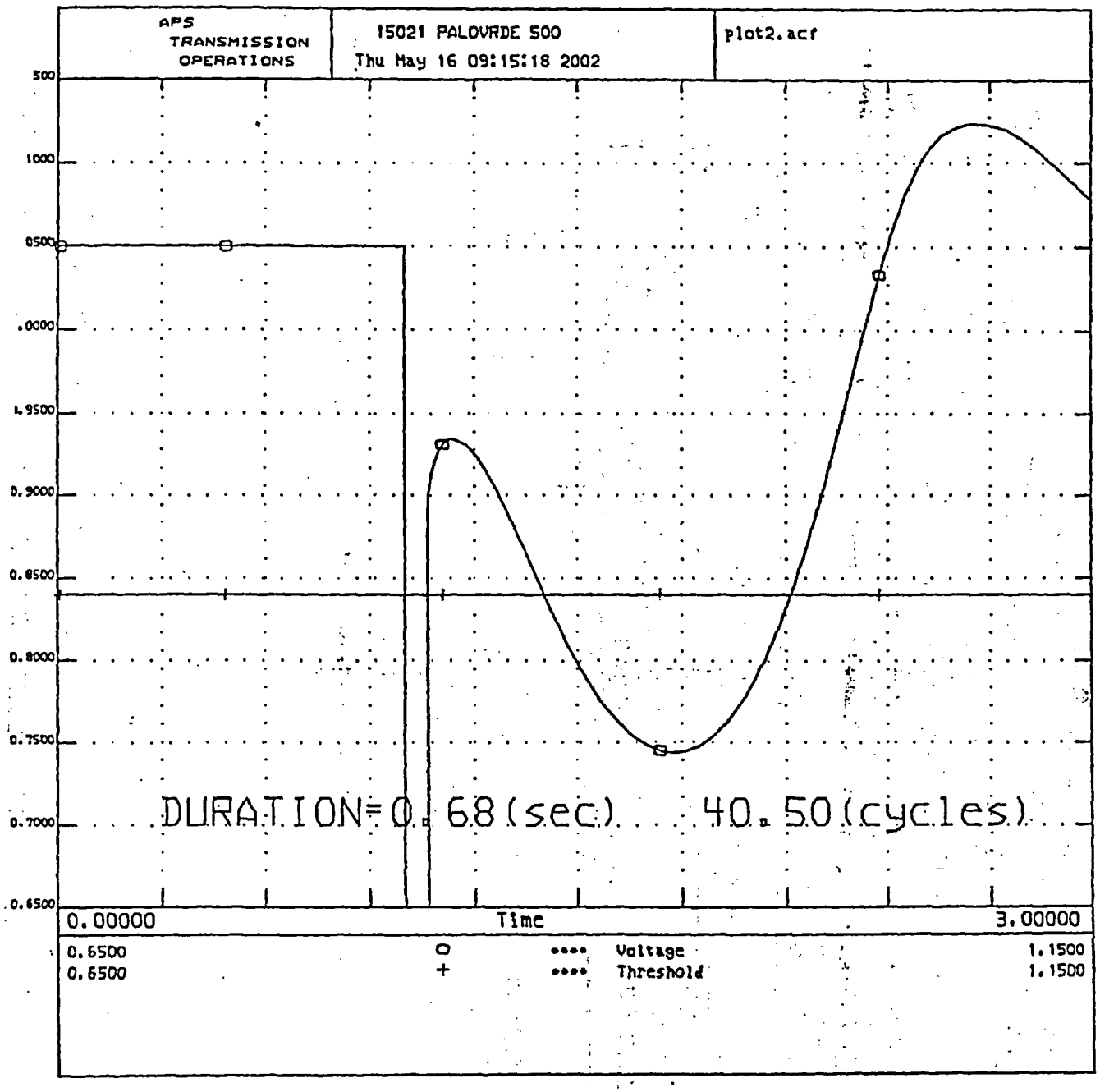

WESTERN SYSTEMS COORDINATING COUNCIL
2002 LSP2 OPERATING CASE
MAY 11, 2001
STAB, SLG FAULT ON PV 500 KV BUS;TWO PV-WWG OUT;4 C CLR FLT W/PV-WWG;
7c TRIP REDO,ARLO,20% INDUCT. MOTORS;02LSP21.DYD

COMMENTS DUE TO AREA COORDINATORS MAY 18, 2001
AREA COORDINATOR COMMENTS DUE TO STAFF MAY 25, 2001

Arizona 500 & 345kV EHV System

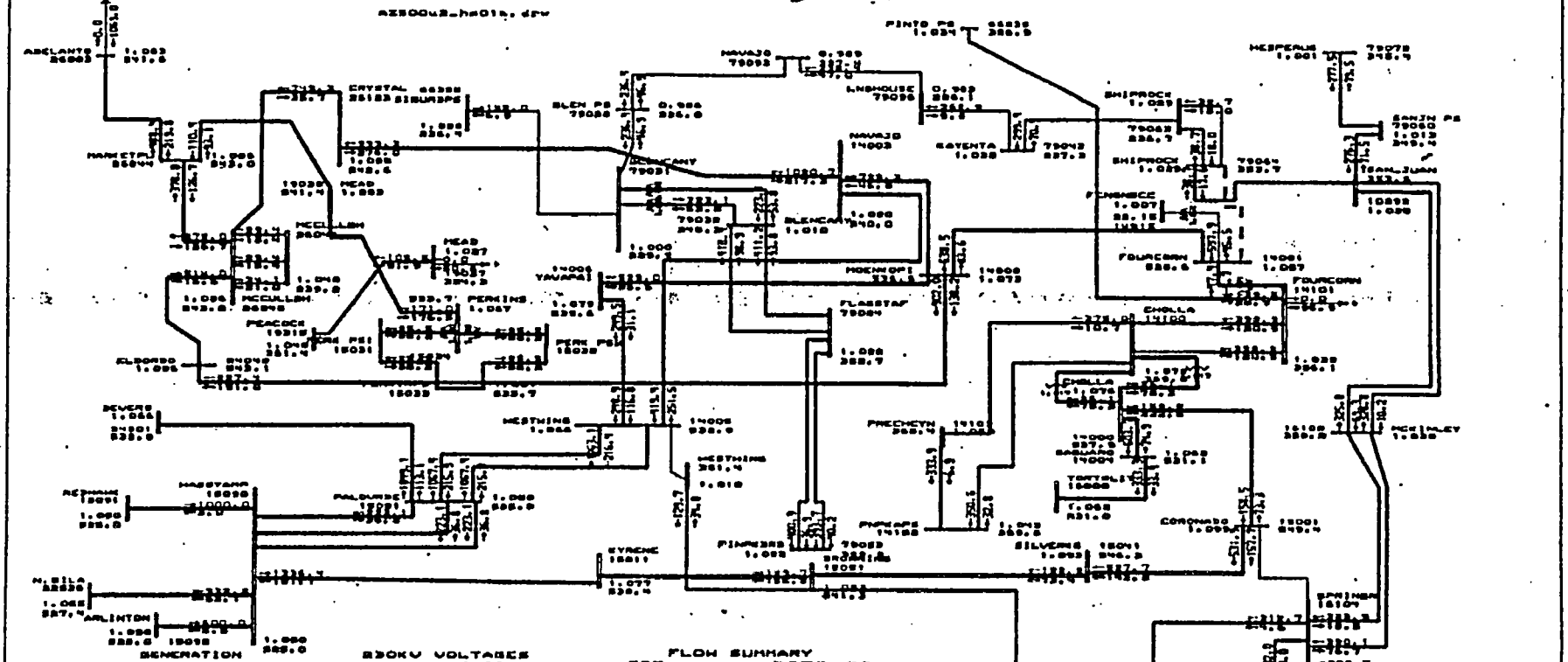

GENERATION	
CORONADO	700.00
CHOLLA	935.00
EMA HYDRO	0.00
FOURCORN	1760.00
HOOVER	543.05
MOHAVE	790.00
NAVAJO	2415.00
PALOVERDE	4056.00
SAN JUAN	1101.14
SPRINGERV	870.00
GRIFITH	100.00
SOPOINT	100.00
MERCHANT	465.00
DSS GEN	0.00
ARL GEN	580.10
REDMANE	1040.00

230KV VOLTAGES	
KYRENE	1.08
FNPKAPS	1.07
WESTWING	1.06
SILVERKG	1.06
MEAD	1.05
SAG(118)	1.06
DEVERS	1.08
LUGO	1.01

FLOW SUMMARY	
EOR	3978.89
WOR (TOTAL)	4727.34
WOR (NORTH)	2812.42
MIDWAY-VINCENT	2093.67
KRAMER-LUGO	225.91
SOCAL IMPORT	10522.62
PDCI	1858.33
COI	2632.20
PGN WEST	1442.02
NE/SE	866.00
SIGURD/RED BUTTE	824.10

PALO VERDE TOTAL	5453.01
PALO VERDE WEST	1981.85
PALO VERDE EAST	3471.16

General Electric International, Inc. PSLF Program

APS TRANSMISSION OPERATIONS	WESTERN SYSTEMS COORDINATING COUNCIL 2002 LSP2 OPERATING CASE MAY 11, 2001	A-02LSP 450 MF 1600, SAV	MON MAY 20 09:05:15 2002 c:\ops\stab\az500_hassyamp.dr c:\ops\stab\02lsp-450mf1600.sb Rating = 1

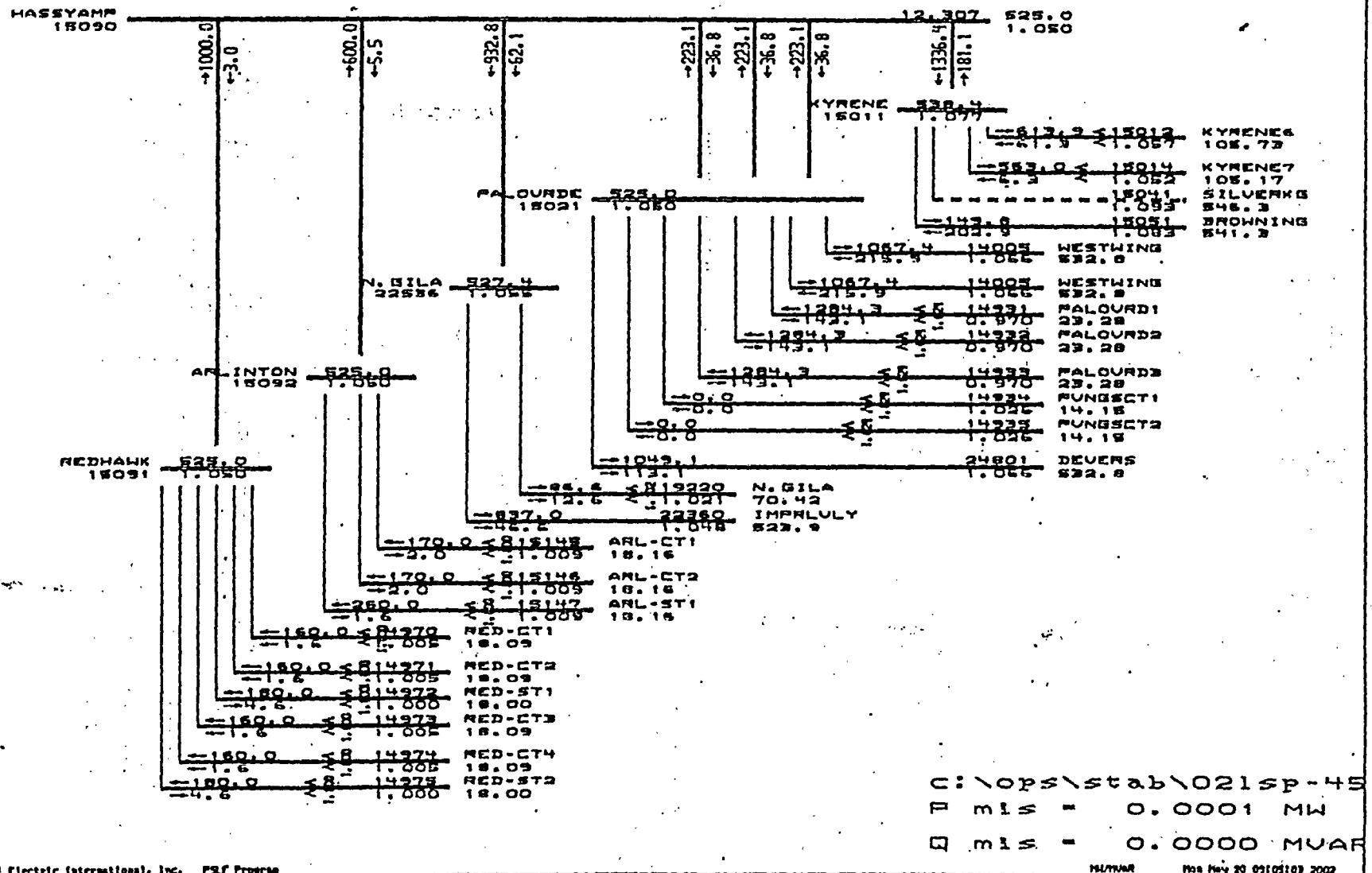

General Electric International, Inc. PSLF Process

MW/MVAR Mon May 20 09:09:03 2002

APS TRANSMISSION OPERATIONS

WESTERN SYSTEMS COORDINATING COUNCIL
2002 LSP2 OPERATING CASE
MAY 11, 2001

c:\ops\stab\az500_hassyamp.dr
c:\ops\stab\021sp-450ac1600.sa
Rating = 1

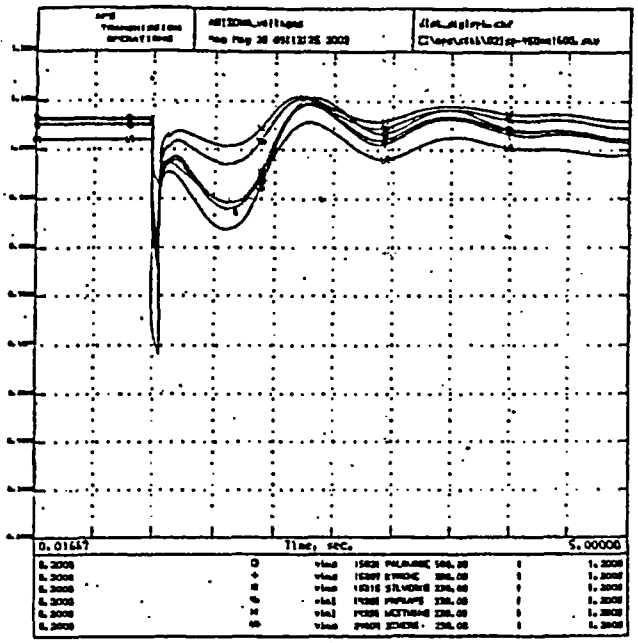

WESTERN SYSTEMS COORDINATING COUNCIL
2002 LSPS OPERATING CASE
MAY 11, 2001
STAB. SLE FAULT ON PV 500 KV BUS(TWO PV-MAE OUT)9 C CLR FLT
TC TRIP RCRO,ARLB,20K INDUCT. MOTORS(02,SP21,3YS

COMMENTS DUE TO AREA COORDINATORS MAY 18, 2001
AREA COORDINATOR COMMENTS DUE TO STAFF MAY 25, 2001

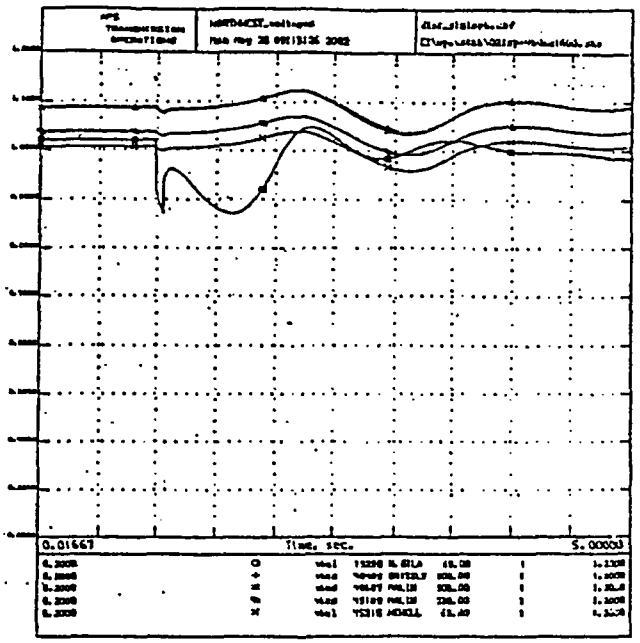

WESTERN SYSTEMS COORDINATING COUNCIL
2002 LSPS OPERATING CASE
MAY 11, 2001
STAB. SLE FAULT ON PV 500 KV BUS(TWO PV-MAE OUT)9 C CLR FLT
TC TRIP RCRO,ARLB,20K INDUCT. MOTORS(02,SP21,3YS

COMMENTS DUE TO AREA COORDINATORS MAY 18, 2001
AREA COORDINATOR COMMENTS DUE TO STAFF MAY 25, 2001

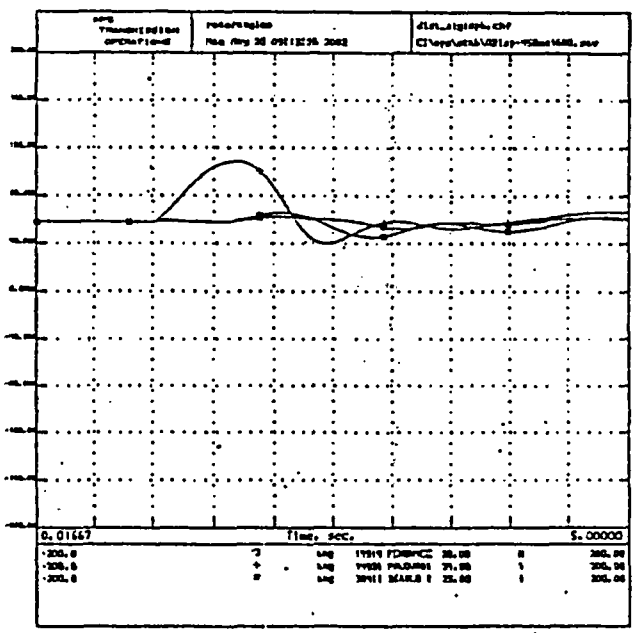

WESTERN SYSTEMS COORDINATING COUNCIL
2002 LSPS OPERATING CASE
MAY 11, 2001
STAB. SLE FAULT ON PV 500 KV BUS(TWO PV-MAE OUT)9 C CLR FLT
TC TRIP RCRO,ARLB,20K INDUCT. MOTORS(02,SP21,3YS

COMMENTS DUE TO AREA COORDINATORS MAY 18, 2001
AREA COORDINATOR COMMENTS DUE TO STAFF MAY 25, 2001

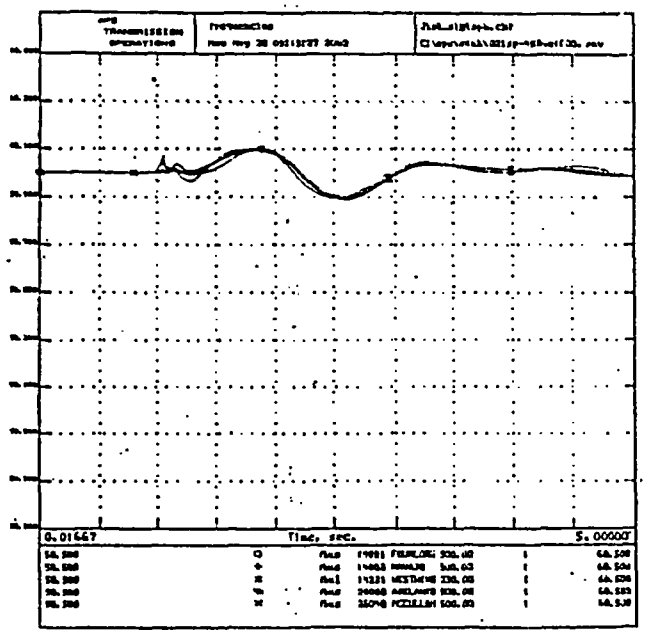

WESTERN SYSTEMS COORDINATING COUNCIL
2002 LSPS OPERATING CASE
MAY 11, 2001
STAB. SLE FAULT ON PV 500 KV BUS(TWO PV-MAE OUT)9 C CLR FLT
TC TRIP RCRO,ARLB,20K INDUCT. MOTORS(02,SP21,3YS

COMMENTS DUE TO AREA COORDINATORS MAY 18, 2001
AREA COORDINATOR COMMENTS DUE TO STAFF MAY 25, 2001

Arizona 500 & 345kV EHV System

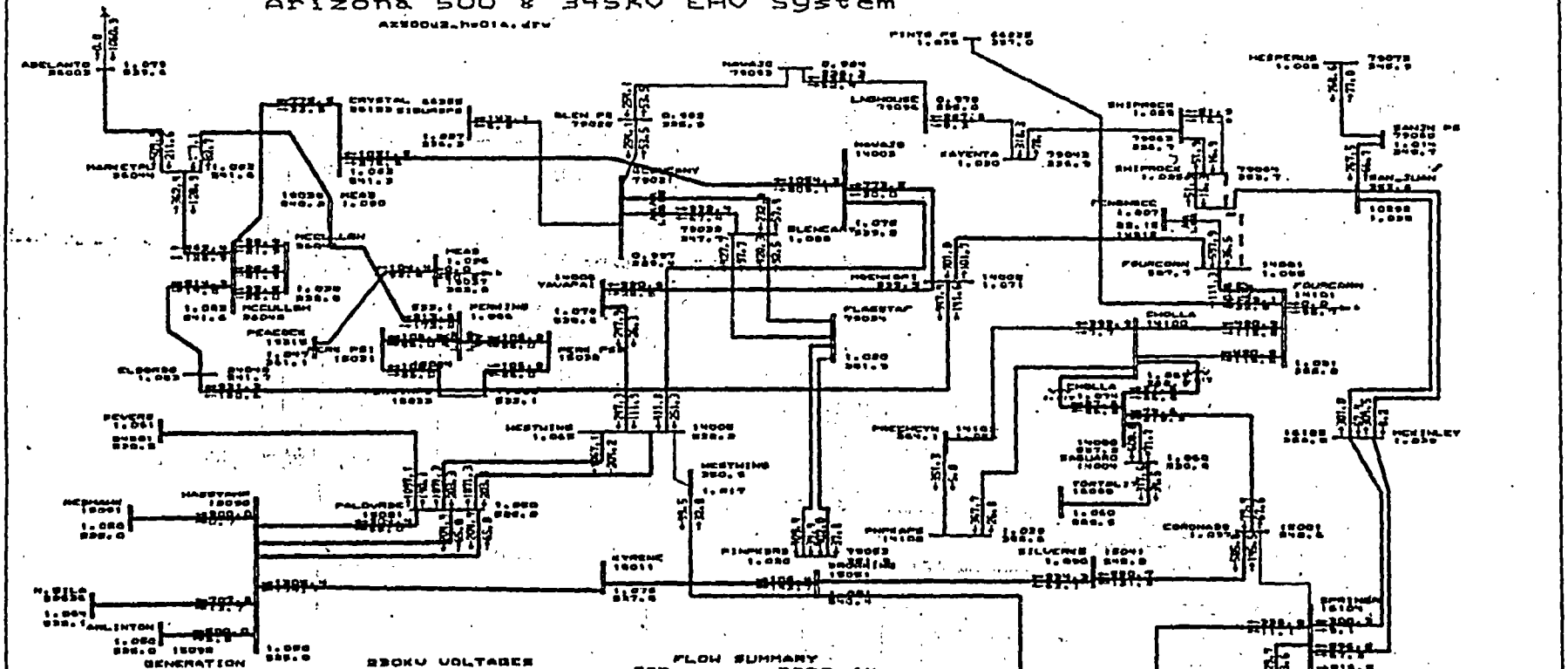

GENERATION

CORONADO	440.00
CHOLLA	885.00
EMA HYDRO	0.00
FOURCORN	1860.00
HOOVER	847.91
MOHAVE	700.00
NAVAJO	3415.00
PALOVERDE	4054.00
SAN JUAN	1101.14
SPRINGERV	470.00
GRIFITH	100.00
SOPOINT	100.00
MERCHANT	465.00
DSM GEN	0.00
APL GEN	886.10
MCMANN	840.80

230KV VOLTAGES

KYRENE	1.08
PNPKAPS	1.06
WESTWING	1.06
SILVERKS	1.05
MEAD	1.08
SAB(1181)	1.06
DEVERS	1.08
LUGO	1.00

FLOW SUMMARY

EOR	3928.14
WOR (TOTAL)	4695.80
WOR (NORTH)	2922.41
MIDWAY-VINCENT	2127.89
KRAMER-LUGO	226.19
SOCAL IMPORT	10524.80
PDCI	1857.48
COI	2723.28
PCN WEST	1550.97
NE/SE	822.93
SIGURD/RED BUTTE	221.64

PALO VERDE TOTAL	5253.00
PALO VERDE WEST	1804.90
PALO VERDE EAST	3448.10

General Electric International, Inc. PSLF Program MW/MVAR Tue Apr 23 16:29:25 2002

20

APS TRANSMISSION OPERATIONS	WESTERN SYSTEMS COORDINATING COUNCIL 2002 LSP2 OPERATING CASE MAY 11, 2001	Hassayampa-Miguel series comp. Bypassed Hass. Gen = 1400MW B- 02LSP HAS MIG SC 1400.SAV	c:\ops\stab\az500_hassyampa.dr c:\ops\stab\02lsp-hasmigsc1400 Rating = 1

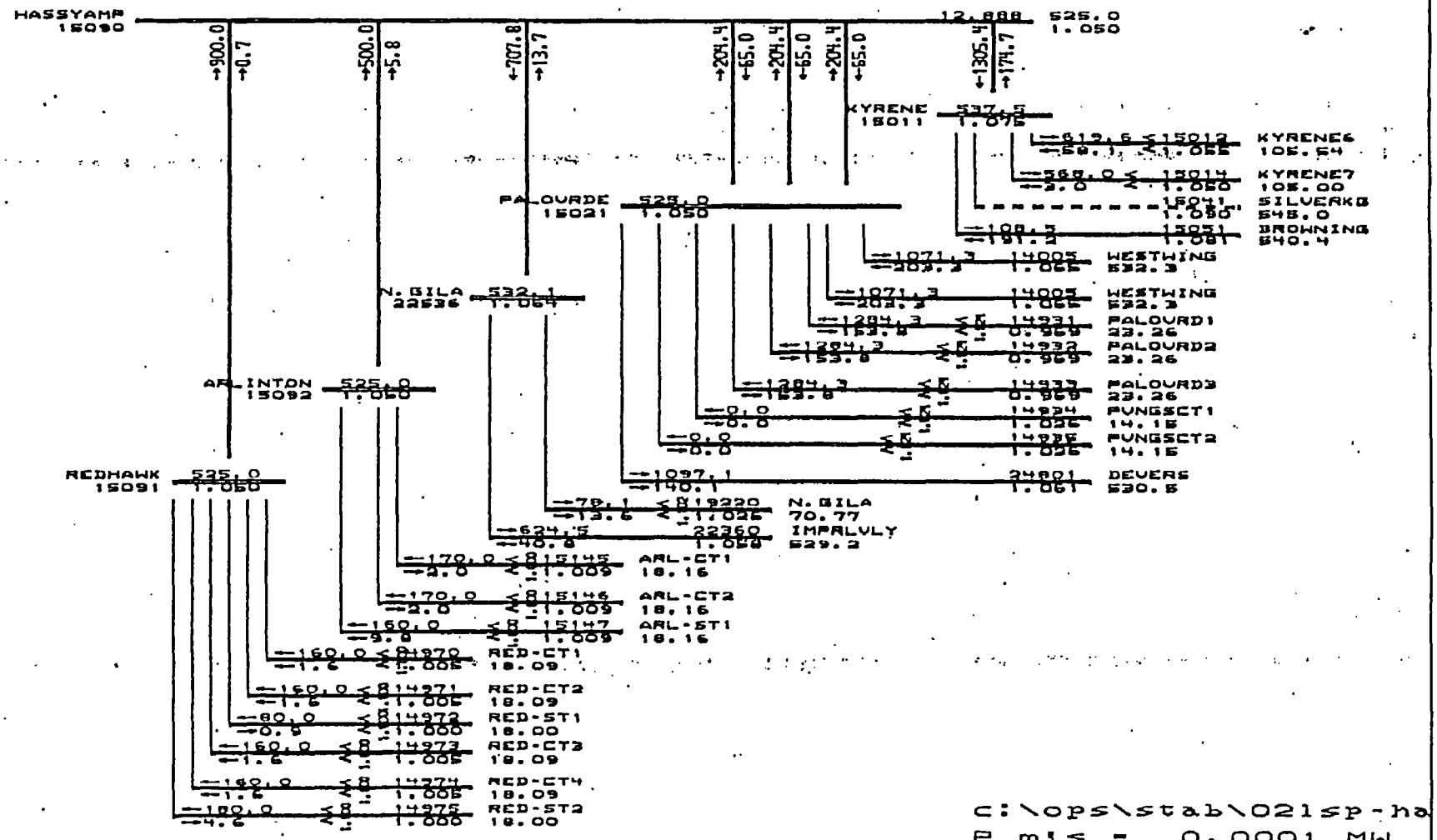

General Electric International, Inc. PSLF Program

MW/MVAR Tue Apr 23 15:33:10 2002

APS TRANSMISSION OPERATIONS	WESTERN SYSTEMS COORDINATING COUNCIL 2002 LSP2 OPERATING CASE MAY 11, 2001	Hassayampa-Miguel series comp. bypassed Hass. Gen = 1400MW	c:\ops\stab\az500_hassyampa.dr c:\ops\stab\021sp-hassmlgsc1400 Rating = 1

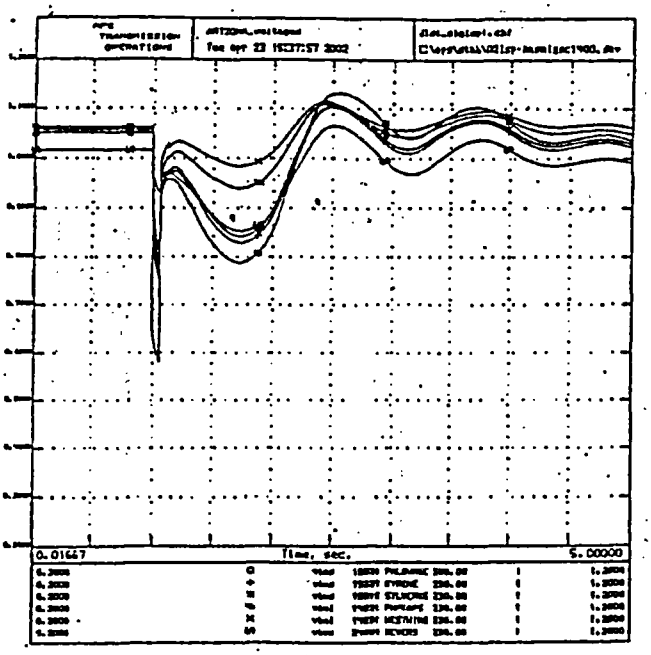

WESTERN SYSTEMS COORDINATING COUNCIL
2002 LSP2 OPERATING CASE
MAY 11, 2001
STAB, SLE FAULT ON PV 500 KV BUS:TAP PV-MAG OUT:1 C CLR FLT W/PV-MAG;
7C TRIP MCDO,ARLS,20K INDUCT. MOTORS:WSLSP21.SYS

Mechanical-Electrical series comp. bypassed

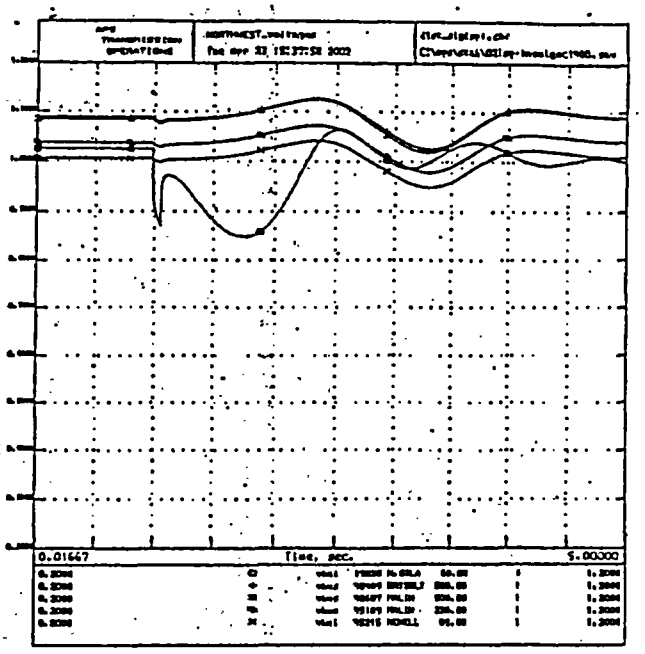

WESTERN SYSTEMS COORDINATING COUNCIL
2002 LSP2 OPERATING CASE
MAY 11, 2001
STAB, SLE FAULT ON PV 500 KV BUS:TAP PV-MAG OUT:1 C CLR FLT W/PV-MAG;
7C TRIP MCDO,ARLS,20K INDUCT. MOTORS:WSLSP21.SYS

Mechanical-Electrical series comp. bypassed

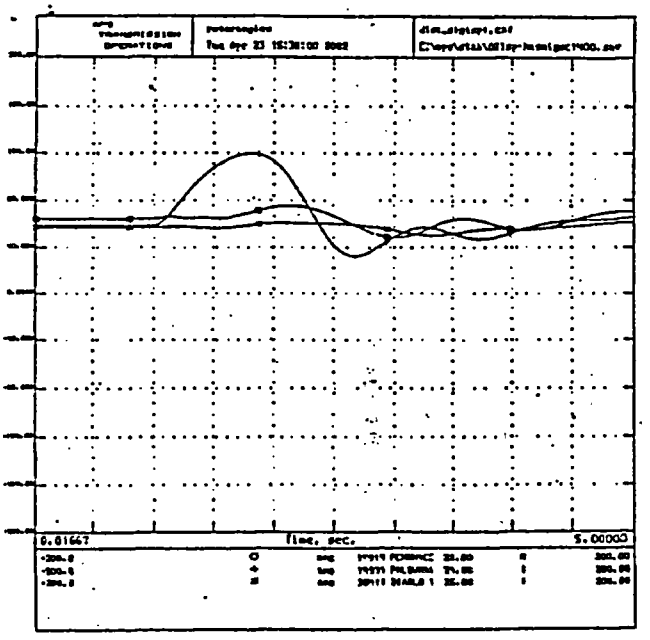

WESTERN SYSTEMS COORDINATING COUNCIL
2002 LSP2 OPERATING CASE
MAY 11, 2001
STAB, SLE FAULT ON PV 500 KV BUS:TAP PV-MAG OUT:1 C CLR FLT W/PV-MAG;
7C TRIP MCDO,ARLS,20K INDUCT. MOTORS:WSLSP21.SYS

Mechanical-Electrical series comp. bypassed

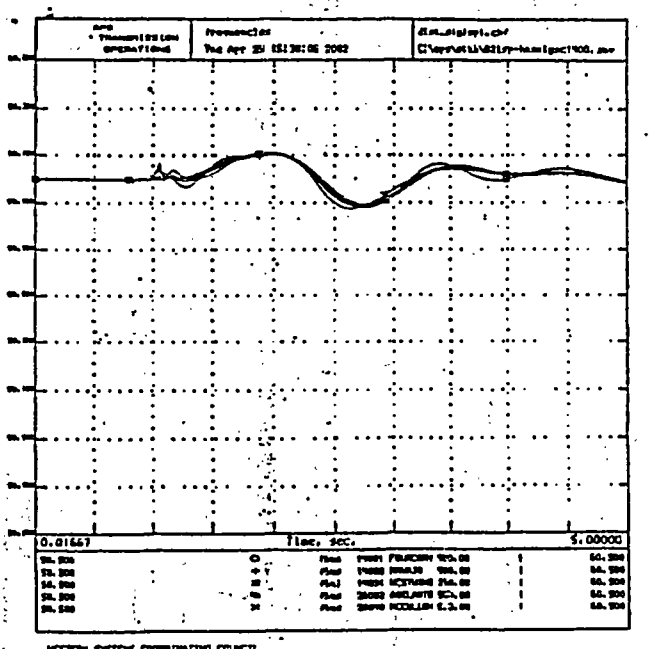

WESTERN SYSTEMS COORDINATING COUNCIL
2002 LSP2 OPERATING CASE
MAY 11, 2001
STAB, SLE FAULT ON PV 500 KV BUS:TAP PV-MAG OUT:1 C CLR FLT W/PV-MAG;
7C TRIP MCDO,ARLS,20K INDUCT. MOTORS:WSLSP21.SYS

Mechanical-Electrical series comp. bypassed

Arizona 500 & 345kV EHV System

AZ500u2_hs01a.drw

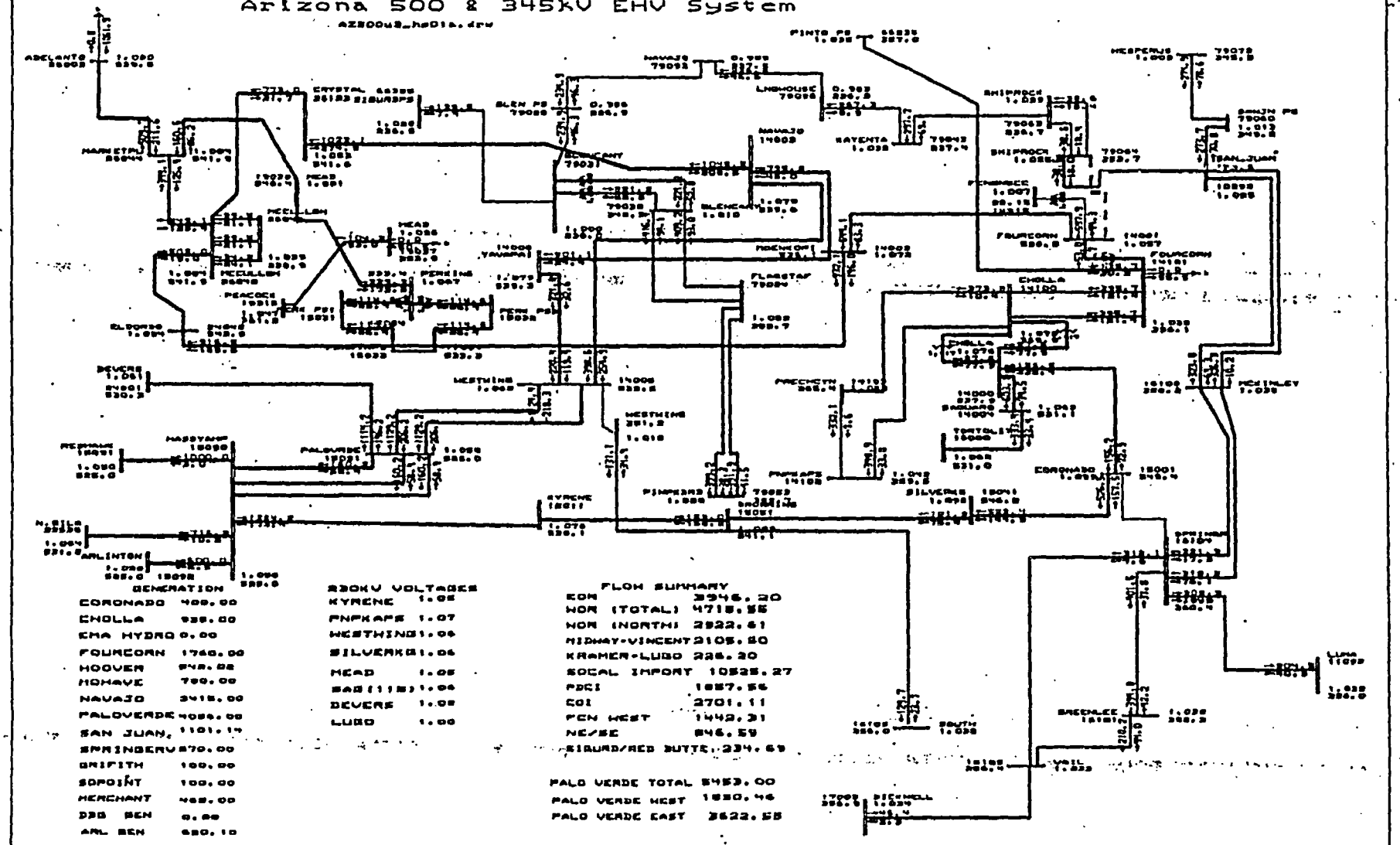

GENERATION

CORONADO	400.00
CHOLLA	920.00
EMA HYDRO	0.00
FOURCORN	1760.00
HOOVER	240.00
MOHAVE	790.00
NAVAJO	2415.00
PALOVERDE	4084.00
SAN JUAN	1101.10
SPRINGERV	570.00
GRIFITH	100.00
SOPOINT	100.00
MERCHANT	400.00
DSG GEN	0.00
ARL GEN	680.10
REDHAWK	1040.00

230KV VOLTAGES

KYRENE	1.02
PNPKAPS	1.07
WESTWING	1.06
SILVERKG	1.06
MEAD	1.05
SAB (115)	1.06
DEVERS	1.02
LUGO	1.00

FLOW SUMMARY

EOM	3946.20
NOM (TOTAL)	4718.55
NOM (NORTH)	2922.61
MIDWAY-VINCENT	2105.80
KRAMER-LUGO	226.20
SOCAL IMPORT	10525.27
PDCI	1857.56
COI	2701.11
PCN WEST	1442.31
NE/SE	846.59
SIGURD/RED BUTTE	234.69

PALO VERDE TOTAL 5453.00
PALO VERDE WEST 1830.46
PALO VERDE EAST 3622.55

General Electric International, Inc. PSLF Program

MH/MWR Mon Apr 22 10:15:51 2002

25 APS TRANSMISSION OPERATIONS	WESTERN SYSTEMS COORDINATING COUNCIL 2002 LSP2 OPERATING CASE MAY 11, 2001	Hassayampa-Nigel series comp. bypassed BL-02LSP-HASMIGSC	c:\ops\stab\az500_hassyampa.dr c:\ops\stab\02lsp-hasmigsc.sav Rating = 1

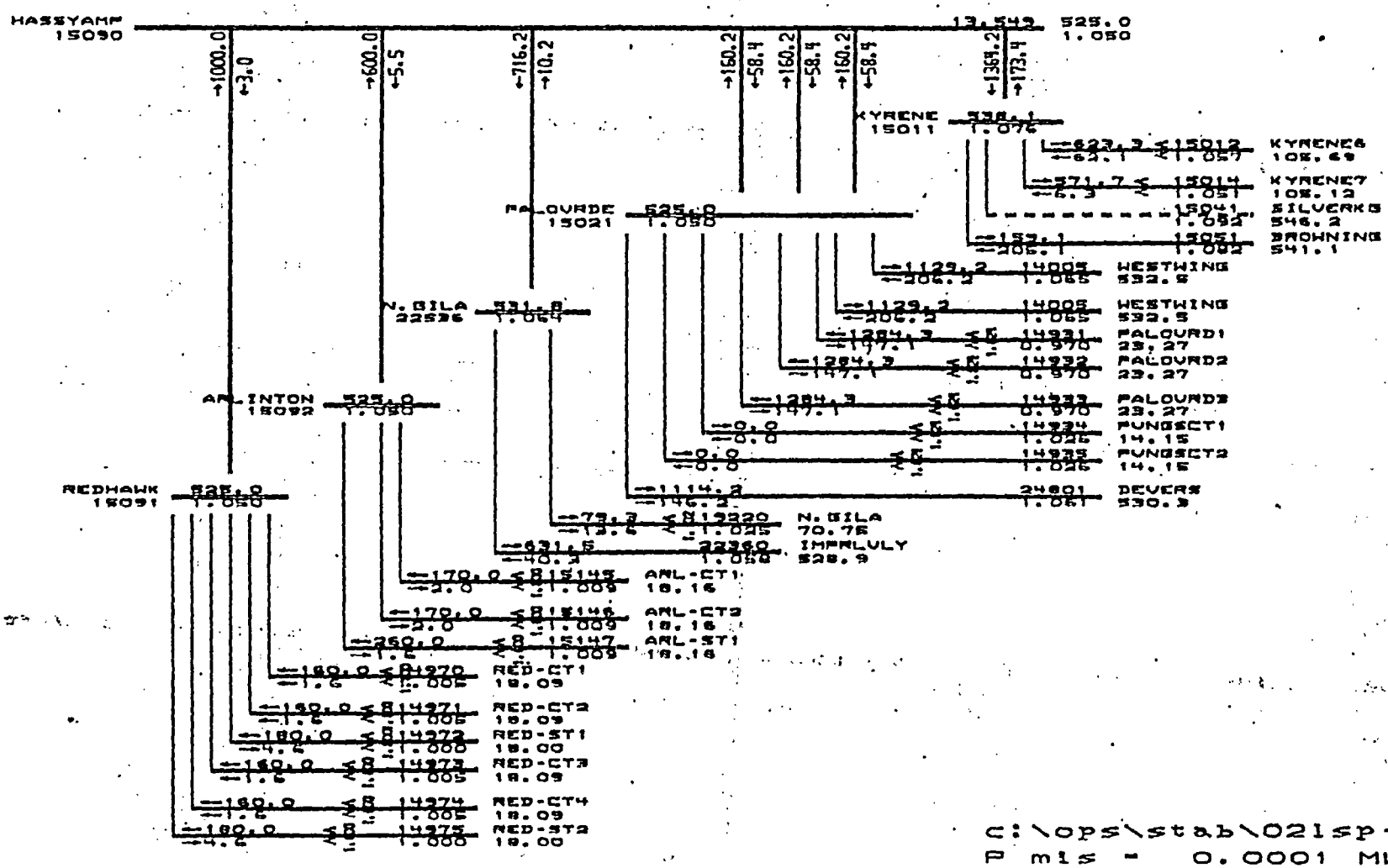

General Electric International, Inc. PSLF Program

MW/MVAR Mon Apr 22 10:10:19 2002

APS TRANSMISSION OPERATIONS	WESTERN SYSTEMS COORDINATING COUNCIL 2002 LSP2 OPERATING CASE MAY 11, 2001		c:\ops\stab\021sp-150mc1600.sa Rating = 1

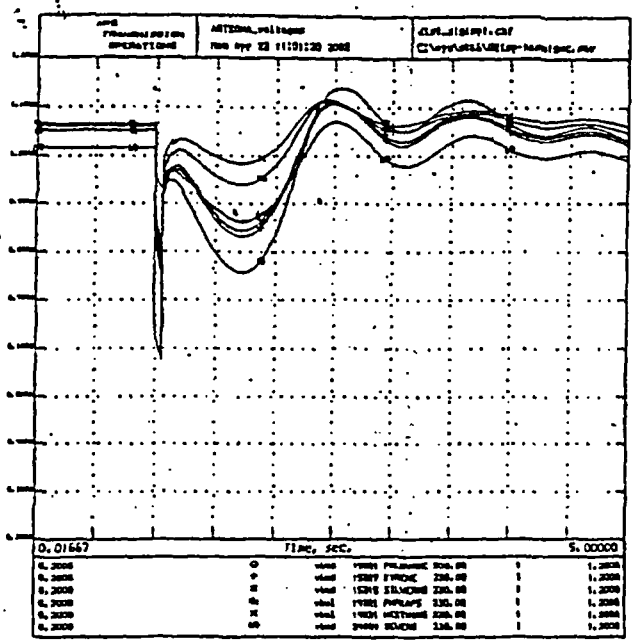

WESTERN SYSTEMS COORDINATING COUNCIL
2002 LSPG OPERATING CASE
MAY 11, 2001
STAB, SLG FAULT ON PV 500 KV BUS;TRP PV-MAS OUT;9 C CLR FLT W/PV-MAS;
%C TRIP RCESOO,ARLB,20% INDUCT. MOTORS;02LSP01.PYB

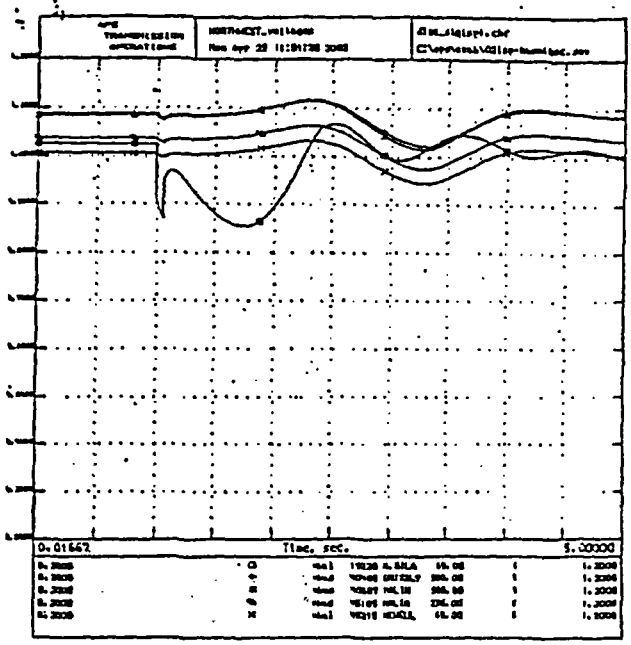

WESTERN SYSTEMS COORDINATING COUNCIL
2002 LSPG OPERATING CASE
MAY 11, 2001
STAB, SLG FAULT ON PV 500 KV BUS;TRP PV-MAS OUT;9 C CLR FLT W/PV-MAS;
%C TRIP RCESOO,ARLB,20% INDUCT. MOTORS;02LSP01.PYB

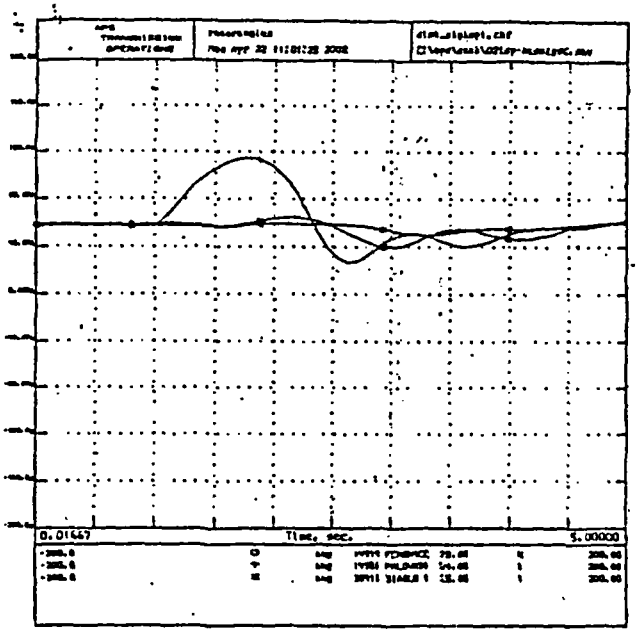

WESTERN SYSTEMS COORDINATING COUNCIL
2002 LSPG OPERATING CASE
MAY 11, 2001
STAB, SLG FAULT ON PV 500 KV BUS;TRP PV-MAS OUT;9 C CLR FLT W/PV-MAS;
%C TRIP RCESOO,ARLB,20% INDUCT. MOTORS;02LSP01.PYB

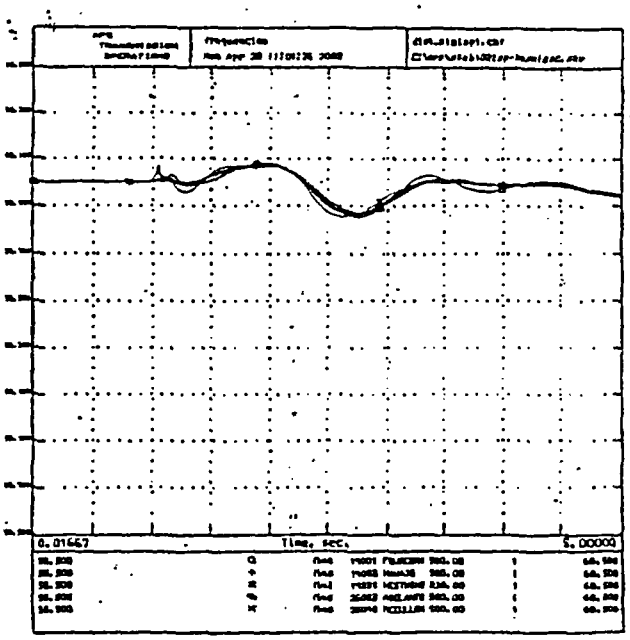

WESTERN SYSTEMS COORDINATING COUNCIL
2002 LSPG OPERATING CASE
MAY 11, 2001
STAB, SLG FAULT ON PV 500 KV BUS;TRP PV-MAS OUT;9 C CLR FLT W/PV-MAS;
%C TRIP RCESOO,ARLB,20% INDUCT. MOTORS;02LSP01.PYB

Arizona 500 & 345kV EHV System

AZ2002_hs01a.drw

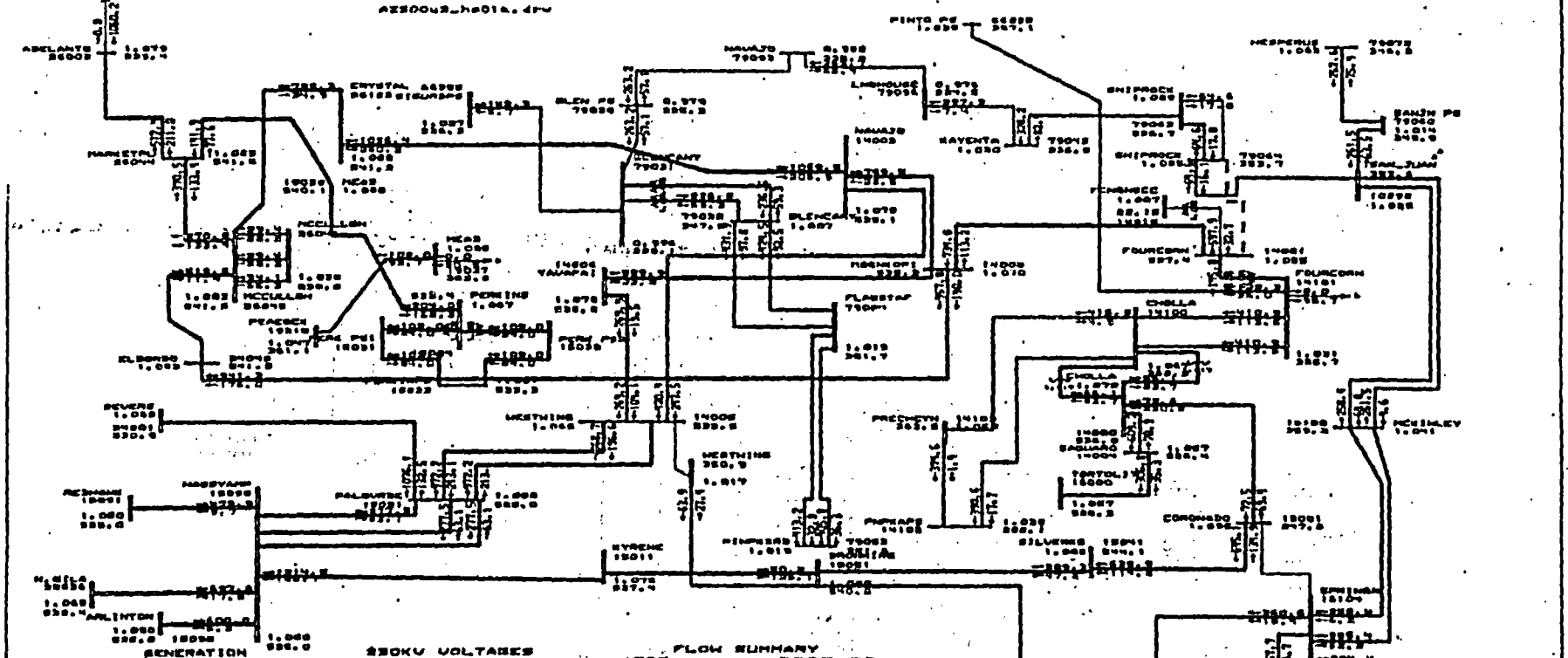

GENERATION	
CORONADO	400.00
CHOLLA	932.00
CHA HYDRO	0.00
FOURCORN	1810.00
HOOVER	881.00
MOHAVE	700.00
NAVAJO	2410.00
PALOVERDE	4056.00
SAN JUAN	1101.14
SPRINGERV	700.00
GRIFITH	100.00
SOPOINT	100.00
MERCHANT	445.00
DSR GEN	0.00
ARL GEN	680.10
REDHAWK	1040.00

230KV VOLTAGES	
KYRENE	1.05
PNPKAPS	1.06
WESTWING	1.06
SILVERKG	1.06
HEAD	1.06
SAB(118)	1.06
DEVERS	1.08
LUGO	1.00

FLOW SUMMARY	
EOR	3905.32
WOR (TOTAL)	4586.36
WOR (NORTH)	2938.84
MIDWAY-VINCENT	2138.38
KRAMER-LUGO	226.24
SOCAL IMPORT	10525.83
PDCI	1857.37
COI	2733.79
PGN WEST	1565.61
NE/SE	811.90
SIBURD/RED BUTTE	225.53
PALO VERDE TOTAL	4932.89
PALO VERDE WEST	1773.98
PALO VERDE EAST	3158.91

General Electric International, Inc. PSLF Program

APS TRANSMISSION OPERATIONS	WESTERN SYSTEMS COORDINATING COUNCIL 2002 LSP2 OPERATING CASE MAY 11, 2001	NEW SCH*1100MW12 UNITS1 HAYS-MIG SC 105 B2- 02LSP-HAMFGSC1100.SAV	c:\ops\stab\az500_hassyamp.dr c:\ops\stab\02lsp-hamfgsc1100. Rating = 1

36

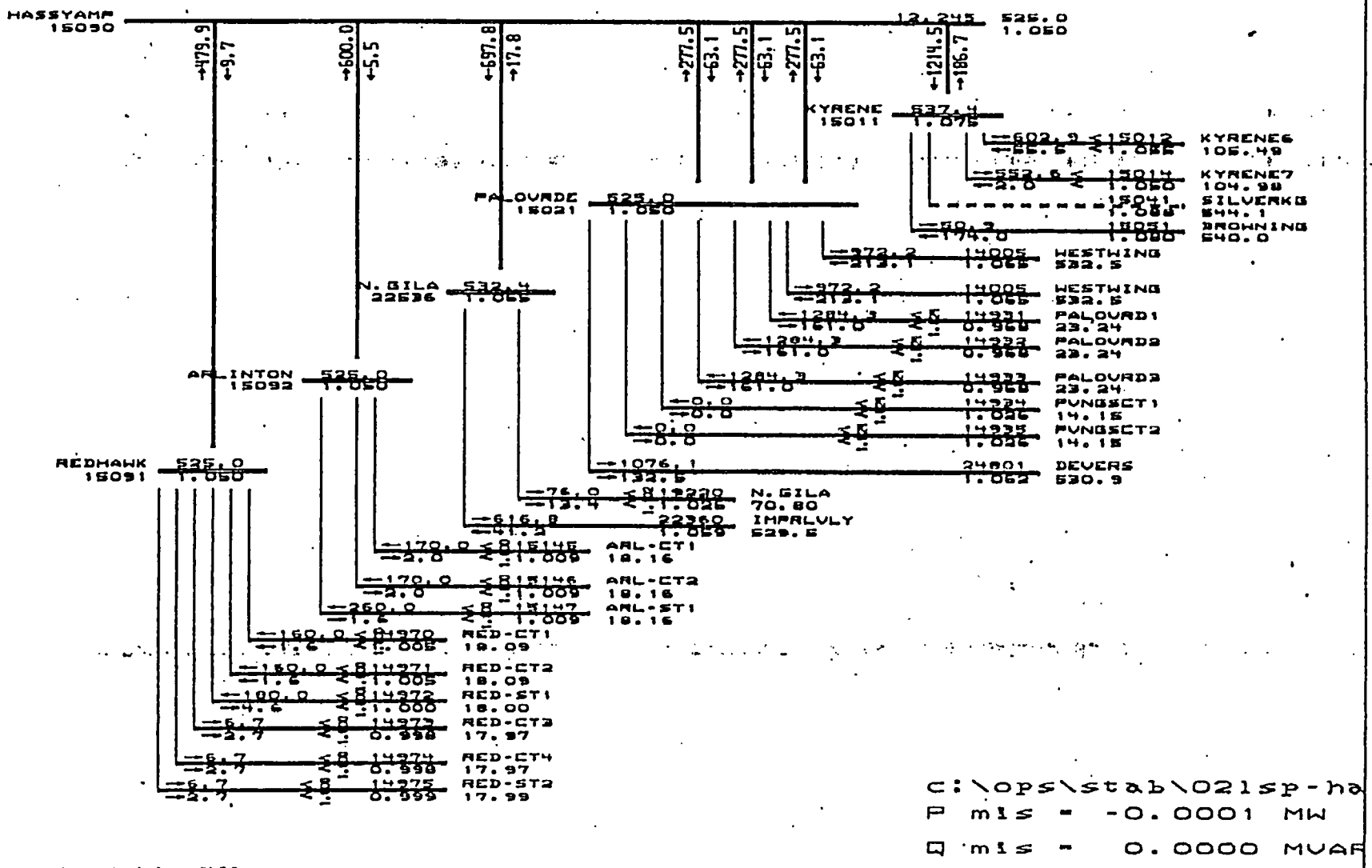
HASSYAMP 15090
12.245 525.0 1.050
479.9 9.7 600.0 5.5 697.8 17.8 277.5 63.1 277.5 63.1 277.5 63.1 1214.5 186.7
KYRENE 15011 537.1 1.075
602.9 15012 KYRENE6 105.49
55.5 1.055
553.6 15014 KYRENE7 104.98
2.0 1.050
15041 SILVERKG 544.1
50.3 18051 BROWNING 540.0
174.0 1.000
PALOVRDE 15021 525.0 1.050
372.2 14005 WESTWING 532.5
213.1 1.065
N. GILA 22636 532.4 1.055
1284.3 14331 PALOVRD1 23.24
161.0 0.969
1284.3 14332 PALOVRD2 23.24
ARLINTON 15092 525.0 1.050
0.0 14324 PVNGSCT1 14.15
0.0 1.026
0.0 14335 PVNGSCT2 14.15
REDMAWK 15091 525.0 1.050
1076.1 24801 DEVERS 530.9
132.5 1.062
76.0 13220 N. GILA 70.80
13.4 1.026
616.8 22360 IMPRLVLY 529.5
41.3 1.059
170.0 15146 ARL-CT1 18.16
2.0 1.009
170.0 15146 ARL-CT2 18.16
2.0 1.009
260.0 15147 ARL-ST1 18.16
1.6 1.009
160.0 14370 RED-CT1 18.09
1.6 1.005
160.0 14371 RED-CT2 18.09
1.6 1.005
100.0 14372 RED-ST1 18.00
4.6 1.000
6.7 14373 RED-CT3 17.97
2.7 0.998
6.7 14374 RED-CT4 17.97
2.7 0.998
6.7 14375 RED-ST2 17.99
2.7 0.999
c:\ops\stab\021sp-ha
P mis = -0.0001 MW
Q mis = 0.0000 MVAR
General Electric International, Inc. PSLF Program
MW/MVAR
Wed Apr 29 09:59:27 2002
APS TRANSMISSION OPERATIONS
WESTERN SYSTEMS COORDINATING COUNCIL
2002 LSP2 OPERATING CASE
MAY 11, 2001
NEW GEN*1100MW(2 UNITS)
HASS-NIG SC 105
c:\ops\stab\a2500_hassyamp.dr
c:\ops\stab\021sp-hassgsc1100.
Rating = 1

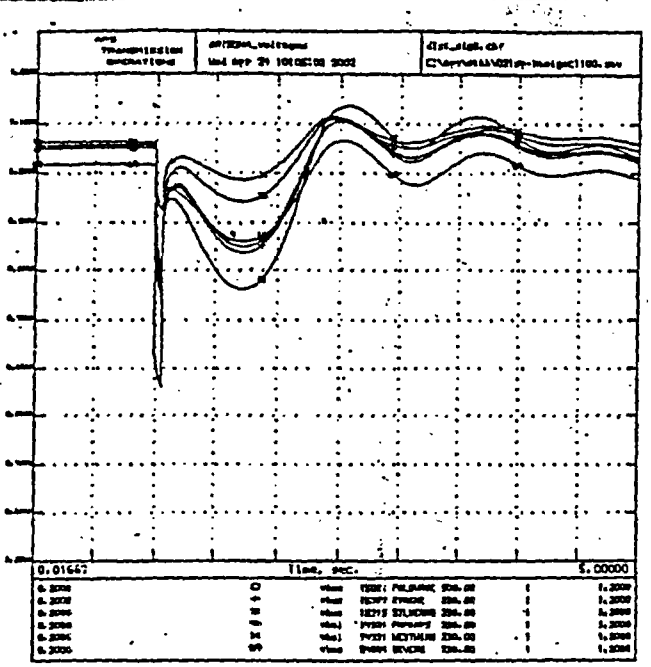

WESTERN SYSTEMS COORDINATING COUNCIL
2002 LSPS OPERATING CASE
MAY 11, 2001
STAB. SLS FAULT ON PV 500 KV BUS:TWO PH-GND BUS:9 C CLR FLT W/PV-GND
TC TRIP RCSO,ARLS,SOK DIRECT. MOTORS:OCL,SP21,BYB

COMMENTS DUE TO AREA COORDINATORS MAY 18, 2001
AREA COORDINATOR COMMENTS DUE TO STAFF MAY 25, 2001

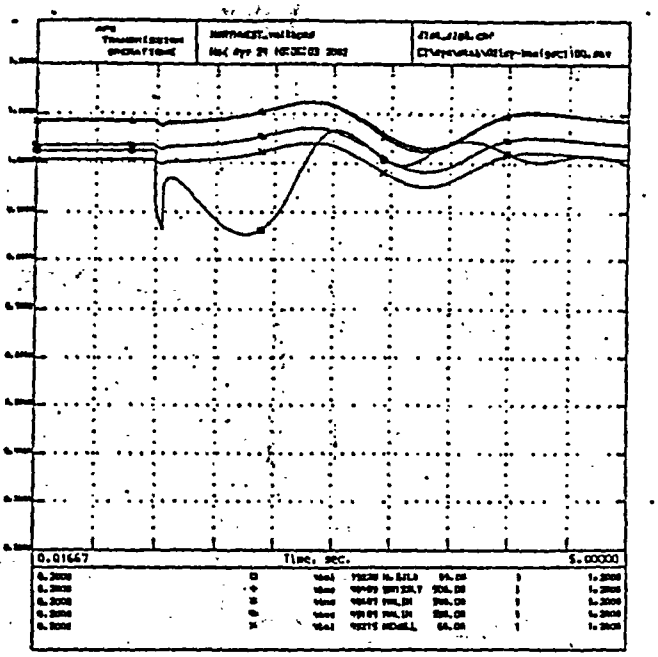

WESTERN SYSTEMS COORDINATING COUNCIL
2002 LSPS OPERATING CASE
MAY 11, 2001
STAB. SLS FAULT ON PV 500 KV BUS:TWO PH-GND BUS:9 C CLR FLT W/PV-GND
TC TRIP RCSO,ARLS,SOK DIRECT. MOTORS:OCL,SP21,BYB

COMMENTS DUE TO AREA COORDINATORS MAY 18, 2001
AREA COORDINATOR COMMENTS DUE TO STAFF MAY 25, 2001

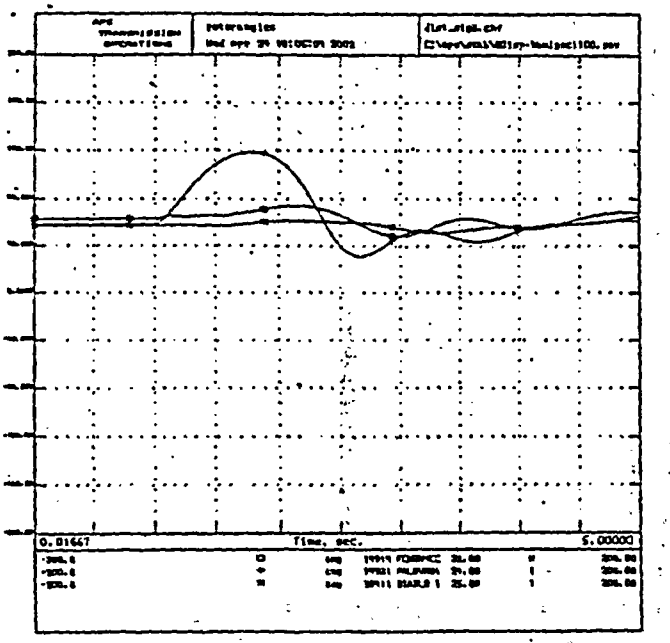

WESTERN SYSTEMS COORDINATING COUNCIL
2002 LSPS OPERATING CASE
MAY 11, 2001
STAB. SLS FAULT ON PV 500 KV BUS:TWO PH-GND BUS:9 C CLR FLT W/PV-GND
TC TRIP RCSO,ARLS,SOK DIRECT. MOTORS:OCL,SP21,BYB

COMMENTS DUE TO AREA COORDINATORS MAY 18, 2001
AREA COORDINATOR COMMENTS DUE TO STAFF MAY 25, 2001

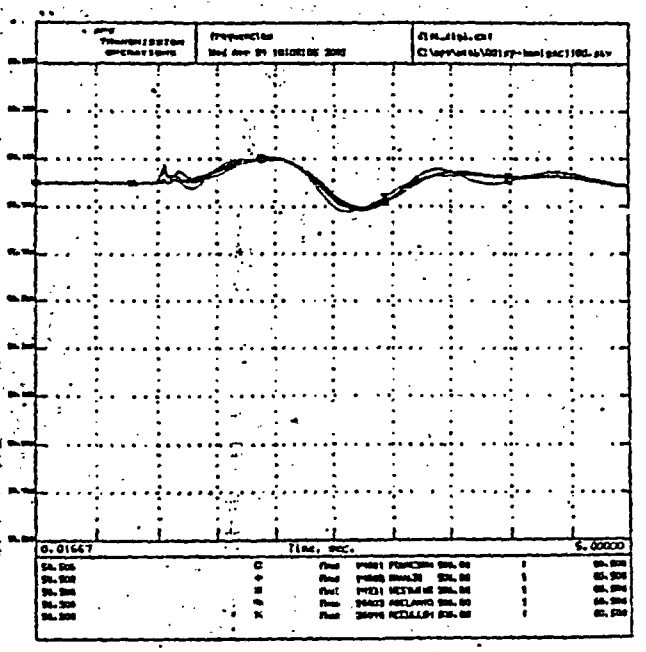

WESTERN SYSTEMS COORDINATING COUNCIL
2002 LSPS OPERATING CASE
MAY 11, 2001
STAB. SLS FAULT ON PV 500 KV BUS:TWO PH-GND BUS:9 C CLR FLT W/PV-GND
TC TRIP RCSO,ARLS,SOK DIRECT. MOTORS:OCL,SP21,BYB

COMMENTS DUE TO AREA COORDINATORS MAY 18, 2001
AREA COORDINATOR COMMENTS DUE TO STAFF MAY 25, 2001

Arizona 500 & 345kV EHV System

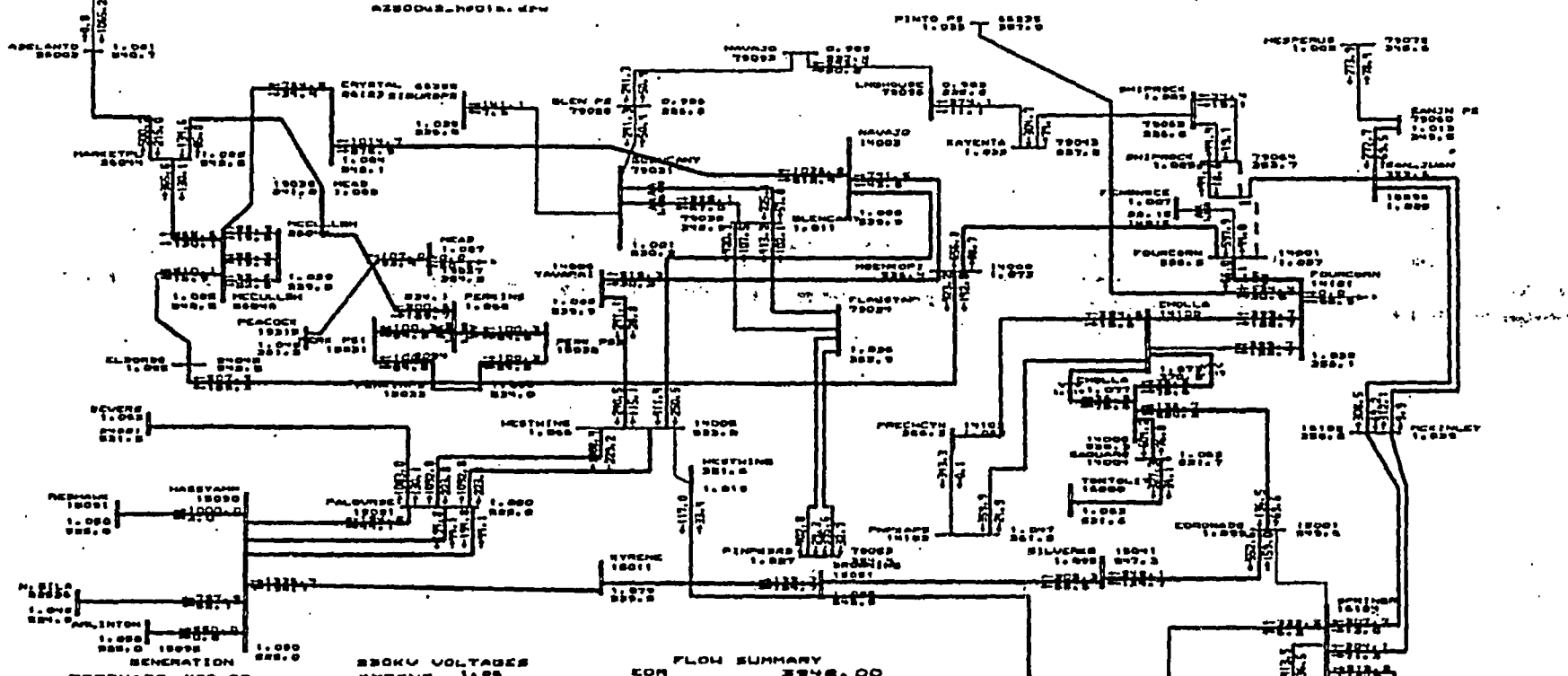

GENERATION	
CORONADO	400.00
CHOLLA	935.00
EHA HYDRO	0.00
FOURCORN	1760.00
HOOVER	242.00
MOHAVE	788.00
NAVAJO	2419.00
PALOVERDE	4088.00
SAN JUAN	1101.14
SPRINGERV	270.00
GRIFITH	100.00
SOPOINT	100.00
MERCHANT	465.00
DSG GEN	0.00
ARL GEN	870.10
REDHAWK	1040.00

230KV VOLTAGES	
KYRENE	1.05
PNPKAPS	1.07
MESTHING	1.07
SILVERKG	1.05
MEAD	1.05
SAB(115)	1.05
DEVERS	1.02
LUGO	1.00

FLOW SUMMARY	
EOR	3948.00
WOR (TOTAL)	4720.97
WOR (NORTH)	2872.47
MIDWAY-VINCENT	2103.19
KRAMER-LUGO	226.07
SOCAL IMPORT	10525.60
PDCI	1857.91
COI	2700.22
PGN WEST	1463.34
NE/SE	847.39
SISUND/REDBUTTE	238.09

PALO VERDE TOTAL	5403.00
PALO VERDE WEST	1880.96
PALO VERDE EAST	3522.04

General Electric International, Inc. PSLF Program

29

APS TRANSMISSION OPERATIONS

WESTERN SYSTEMS COORDINATING CONCIL
2002 LSP2 OPERATING CASE
MAY 11, 2001

Hassayampa-N.Gila SC Out
New gen 1550MW
C- D2L3P- HASNGSC1550.SAV

Tue Apr 23 09:06:37 2002
c:\ops\stab\az500_hassyampa.dr
c:\ops\stab\02lsp-hasngsc1550.
Rating = 1

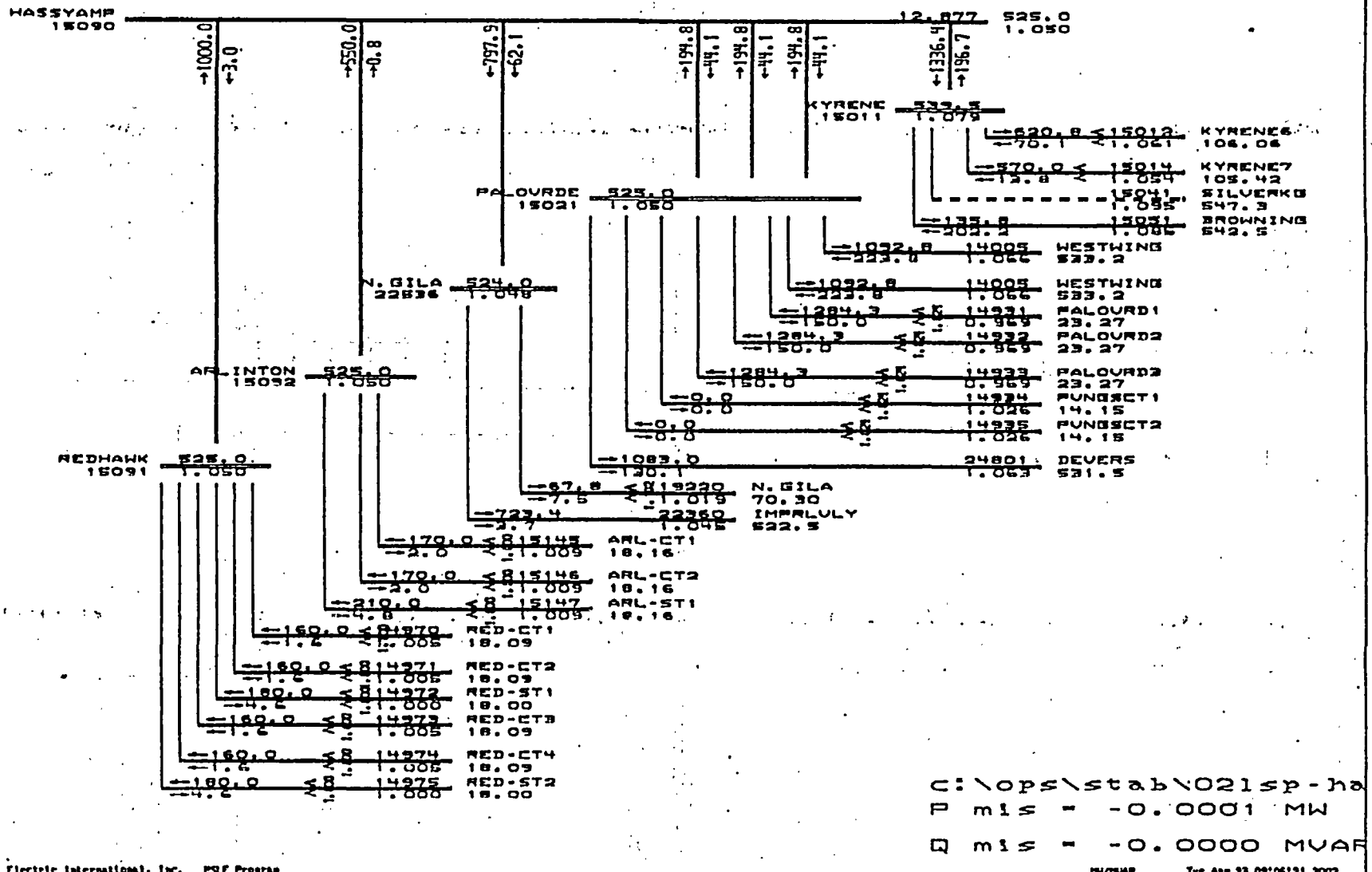

General Electric International, Inc. PSLF Program MW/MVAR Tue Apr 23 09:06:21 2002

APS TRANSMISSION OPERATIONS	WESTERN SYSTEMS COORDINATING COUNCIL 2002 LSP2 OPERATING CASE MAY 11, 2001	Hassayampa-N.Gila SC Out New gen=1550MW	c:\ops\stab\az500_hassyampa.dr c:\ops\stab\021sp-hasngsc1550. Rating = 1

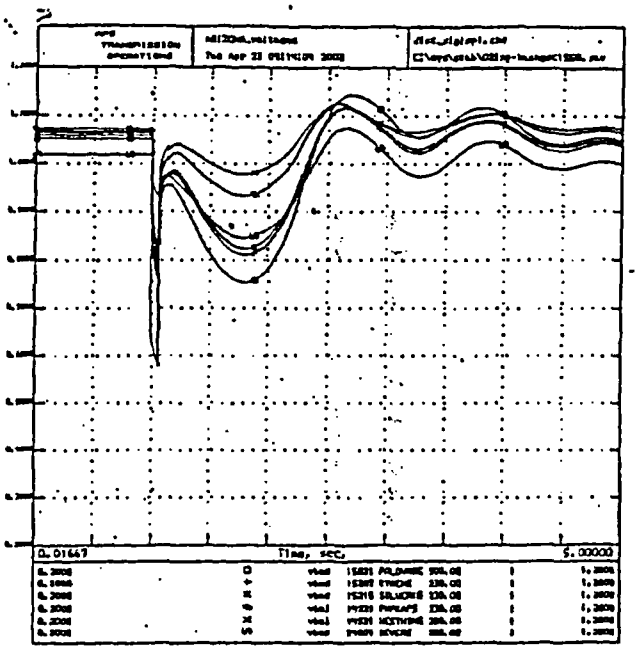

WESTERN SYSTEMS COORDINATING COUNCIL
2002 LSPS OPERATING CASE
MAY 11, 2001
STAB, SLS FAULT ON PV 500 KV BUS(TWO PV-MAS OUT)V C CLS FLT W/PV-MAS
TC TRIP RCOS,ALS,20% INDUCT. MOTORS(GS,SP2).DYD

COMMENTS DUE TO AREA COORDINATORS MAY 18, 2001
AREA COORDINATOR COMMENTS DUE TO STAFF MAY 25, 2001

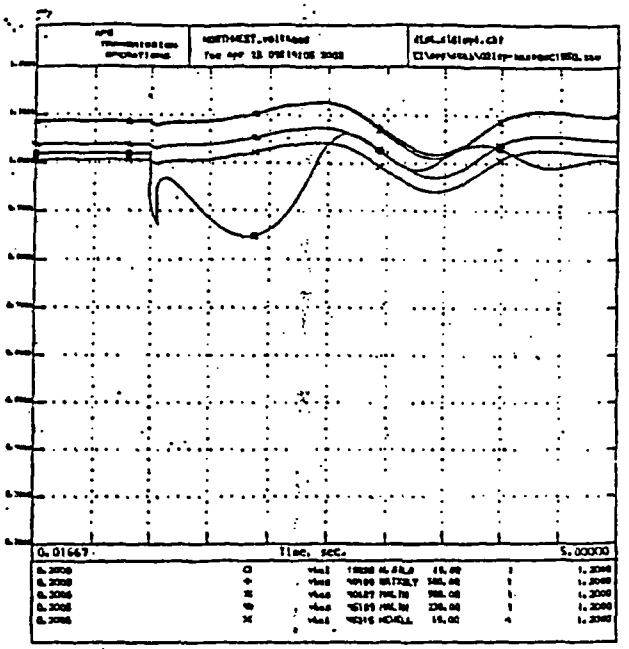

WESTERN SYSTEMS COORDINATING COUNCIL
2002 LSPS OPERATING CASE
MAY 11, 2001
STAB, SLS FAULT ON PV 500 KV BUS(TWO PV-MAS OUT)V C CLS FLT W/PV-MAS
TC TRIP RCOS,ALS,20% INDUCT. MOTORS(GS,SP2).DYD

COMMENTS DUE TO AREA COORDINATORS MAY 18, 2001
AREA COORDINATOR COMMENTS DUE TO STAFF MAY 25, 2001

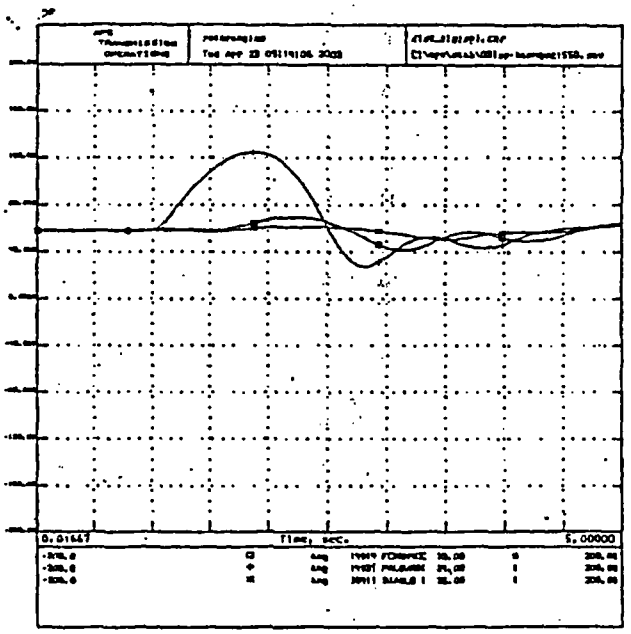

WESTERN SYSTEMS COORDINATING COUNCIL
2002 LSPS OPERATING CASE
MAY 11, 2001
STAB, SLS FAULT ON PV 500 KV BUS(TWO PV-MAS OUT)V C CLS FLT W/PV-MAS
TC TRIP RCOS,ALS,20% INDUCT. MOTORS(GS,SP2).DYD

COMMENTS DUE TO AREA COORDINATORS MAY 18, 2001
AREA COORDINATOR COMMENTS DUE TO STAFF MAY 25, 2001

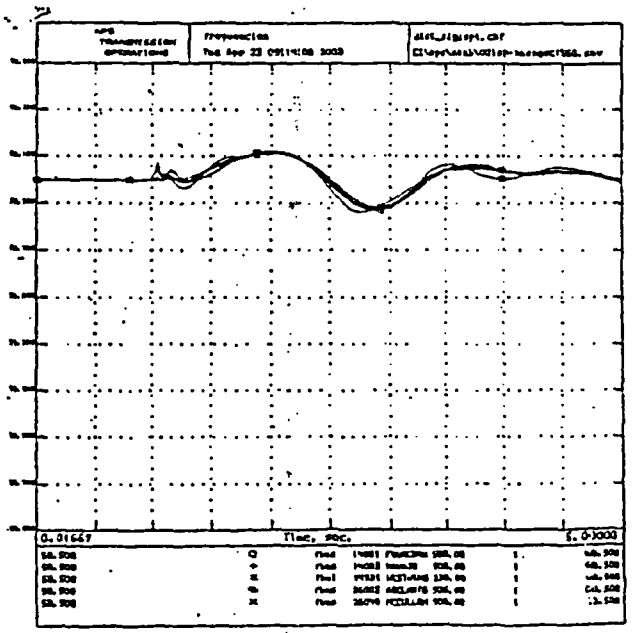

WESTERN SYSTEMS COORDINATING COUNCIL
2002 LSPS OPERATING CASE
MAY 11, 2001
STAB, SLS FAULT ON PV 500 KV BUS(TWO PV-MAS OUT)V C CLS FLT W/PV-MAS
TC TRIP RCOS,ALS,20% INDUCT. MOTORS(GS,SP2).DYD

COMMENTS DUE TO AREA COORDINATORS MAY 18, 2001
AREA COORDINATOR COMMENTS DUE TO STAFF MAY 25, 2001

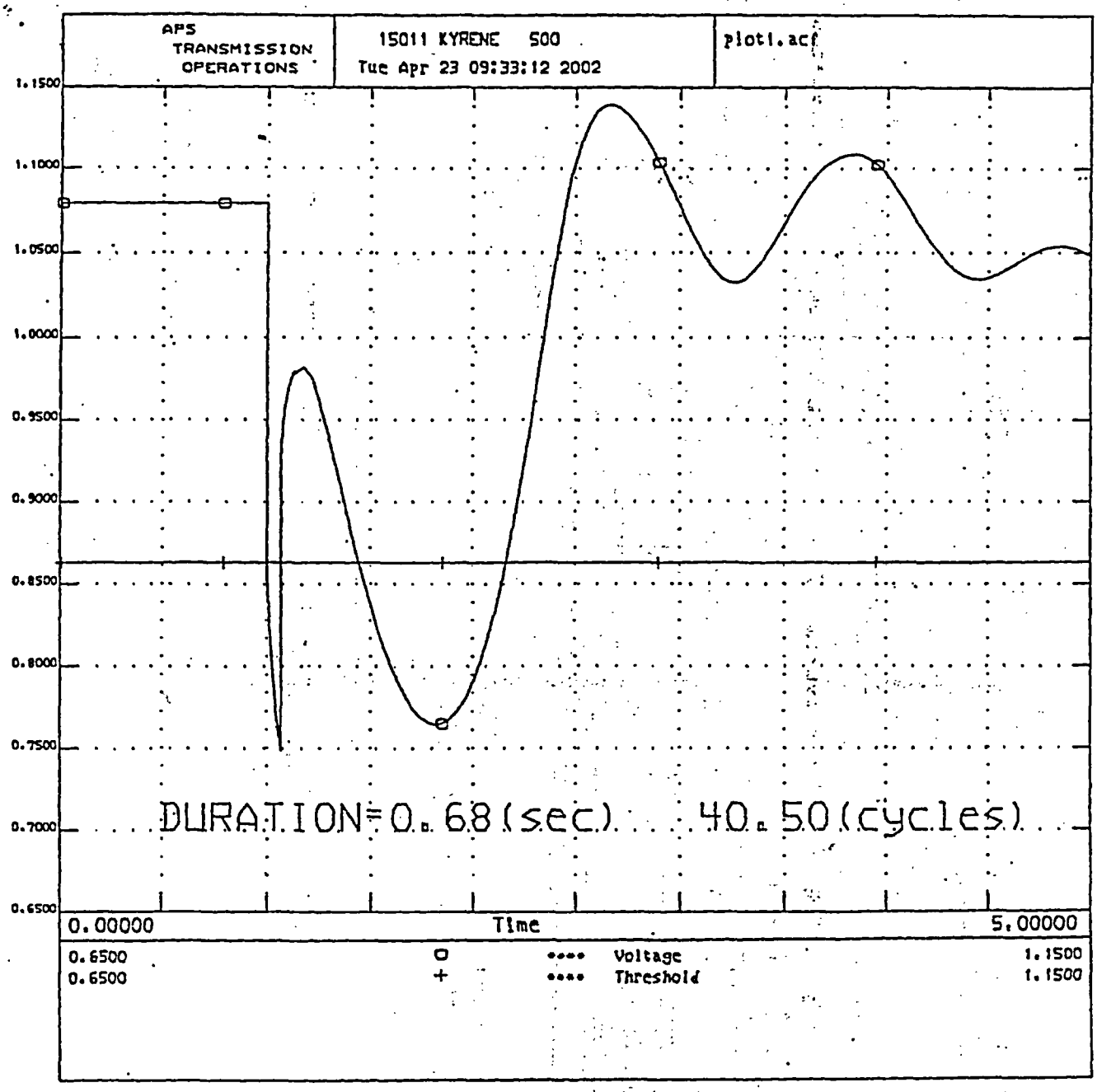

WESTERN SYSTEMS COORDINATING COUNCIL
2002 LSP2 OPERATING CASE
MAY 11, 2001
STAB, SLG FAULT ON PV 500 KV BUS;TWO PV-WWG OUT;4 C CLR FLT W/PV-WWG;
7c TRIP REDO,ARLO,20% INDUCT. MOTORS;02LSP21.DYD

COMMENTS DUE TO AREA COORDINATORS MAY 18, 2001
AREA COORDINATOR COMMENTS DUE TO STAFF MAY 25, 2001

Arizona 500 & 345kV EHV System

A2500US_hs01a.drw

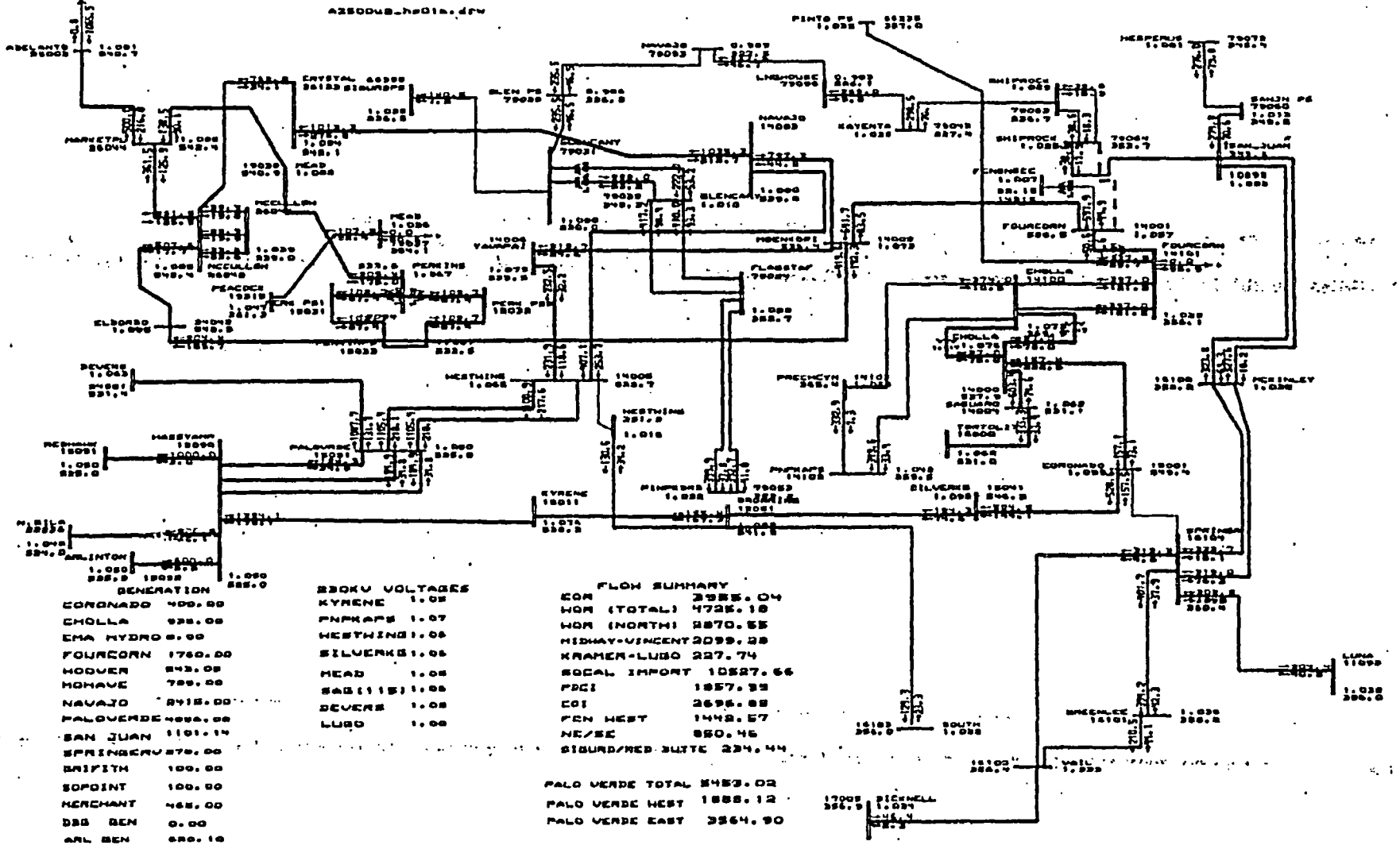

GENERATION	
CORONADO	400.00
CHOLLA	928.00
EMA HYDRO	0.00
FOURCORN	1760.00
HOOVER	543.00
MOHAVE	789.00
NAVAJO	2415.00
PALOVERDE	[illegible]
SAN JUAN	1101.14
SPRINGERV	270.00
BRIFITH	100.00
SOPOINT	100.00
MERCHANT	465.00
DSG GEN	0.00
ARL GEN	680.10
REDHAWK	1040.80

230KV VOLTAGES	
KYRENE	1.02
PNPKAPS	1.07
HESTHING	1.06
SILVERKS	1.05
HEAD	1.05
SAG(115)	1.06
DEVERS	1.08
LUGO	1.00

FLOW SUMMARY	
EOR	3985.04
WOR (TOTAL)	4725.18
WOR (NORTH)	2870.55
MIDWAY-VINCENT	2099.28
KRAMER-LUGO	227.74
SOCAL IMPORT	10527.66
PDCI	1857.33
COI	2695.88
PGN WEST	1442.57
NE/SE	850.46
SIGURD/RED BUTTE	224.44

PALO VERDE TOTAL	5453.02
PALO VERDE WEST	1888.12
PALO VERDE EAST	3564.90

General Electric International, Inc. PSLF Program MAUTNAR Mon Apr 22 13:39:58 2002

35 APS TRANSMISSION OPERATIONS	WESTERN SYSTEMS COORDINATING COUNCIL 2002 LSP2 OPERATING CASE MAY 11, 2001	Hassayampa-N.Gila SC Out C1-0215P-HASNG SC. SAV	c:\ops\stab\a2500_hassyampa.dr c:\ops\stab\0215p-hasngsc.sav Rating = 1

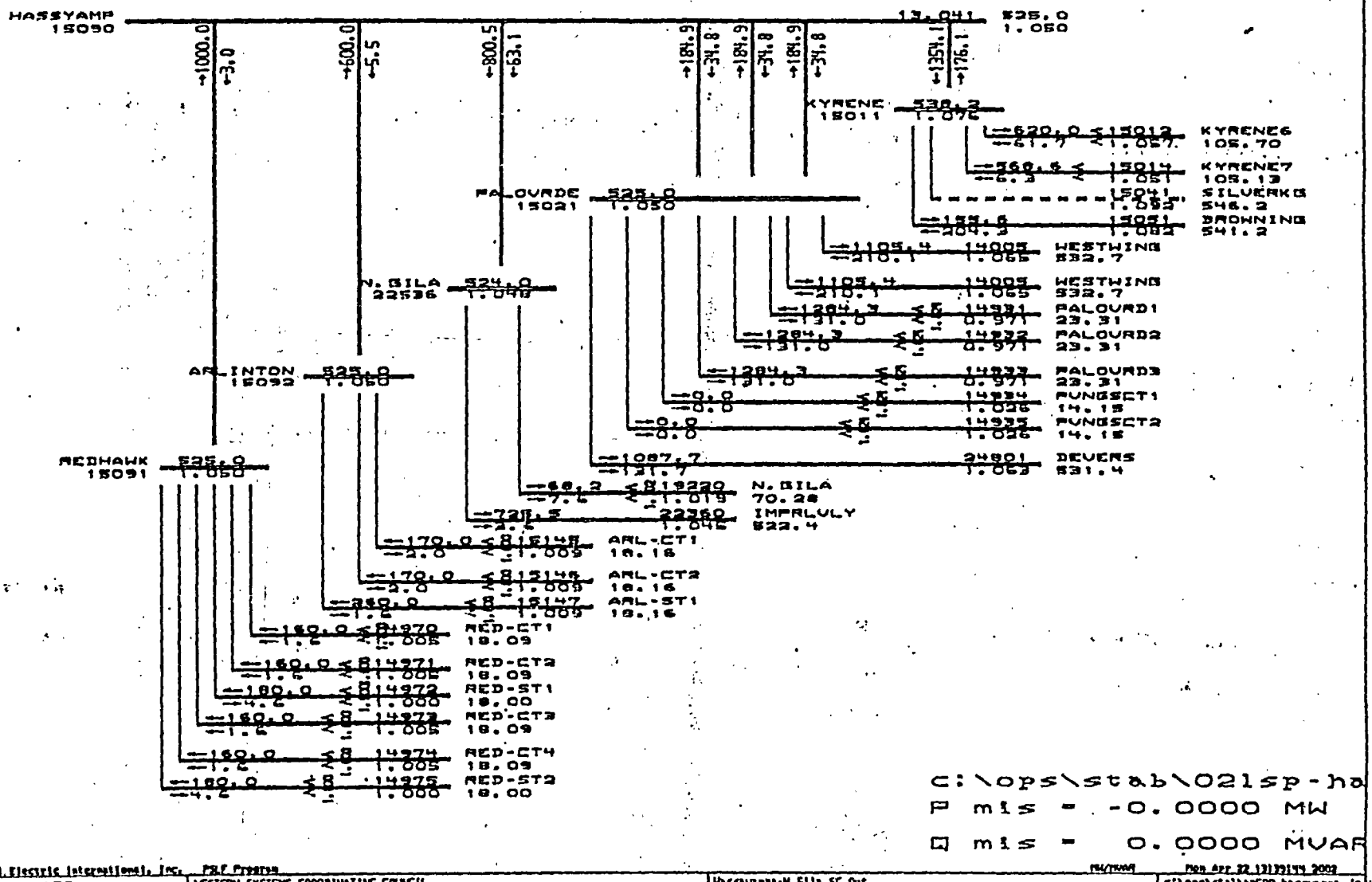

General Electric International, Inc. PSLF Program

34 APS TRANSMISSION OPERATIONS	WESTERN SYSTEMS COORDINATING COUNCIL 2002 LSP2 OPERATING CASE MAY 11, 2001	Hassyamp-N.Bila SC Out	c:\ops\stab\u2500.hassyamp.dr c:\ops\stab\021sp-hassysc.sav Rating = 1

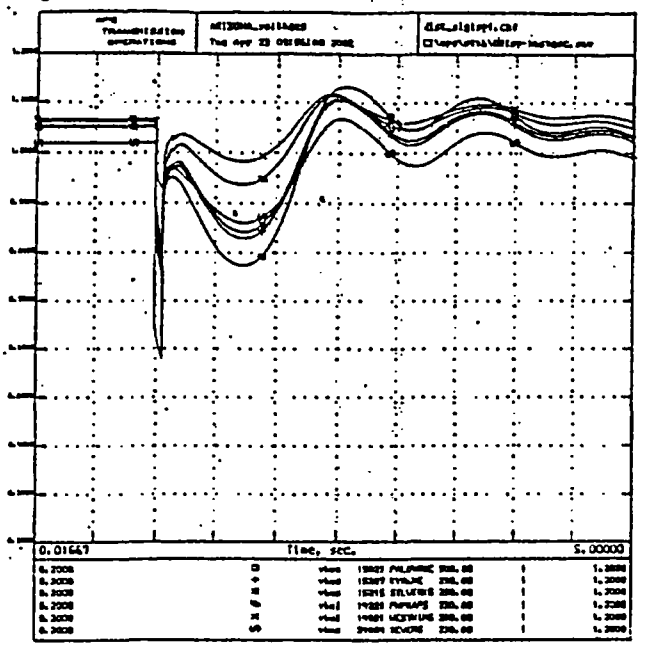

WESTERN SYSTEMS COORDINATING COUNCIL
2002 LSP2 OPERATING CASE
MAY 11, 2001
STAB. 3LG FAULT ON PV 500 KV BUS; TRIP PV-MAD OUT;1 C CLR FLT W/PV-MAD;
TC TRIP MCD160,MAL0,20% INDUCT. MOTORS;02_SP21.DYD

COMMENTS DUE TO AREA COORDINATORS MAY 18, 2001
AREA COORDINATOR COMMENTS DUE TO STAFF MAY 25, 2001

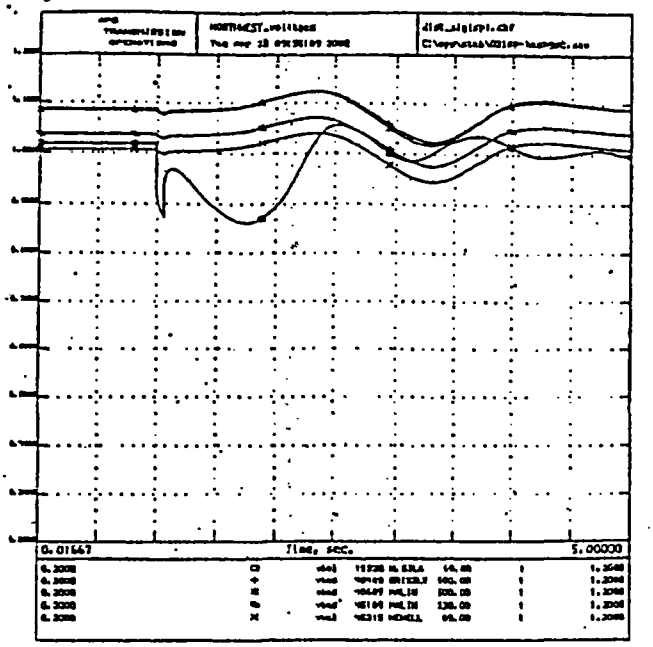

WESTERN SYSTEMS COORDINATING COUNCIL
2002 LSP2 OPERATING CASE
MAY 11, 2001
STAB. 3LG FAULT ON PV 500 KV BUS; TRIP PV-MAD OUT;1 C CLR FLT W/PV-MAD;
TC TRIP MCD160,MAL0,20% INDUCT. MOTORS;02_SP21.DYD

COMMENTS DUE TO AREA COORDINATORS MAY 18, 2001
AREA COORDINATOR COMMENTS DUE TO STAFF MAY 25, 2001

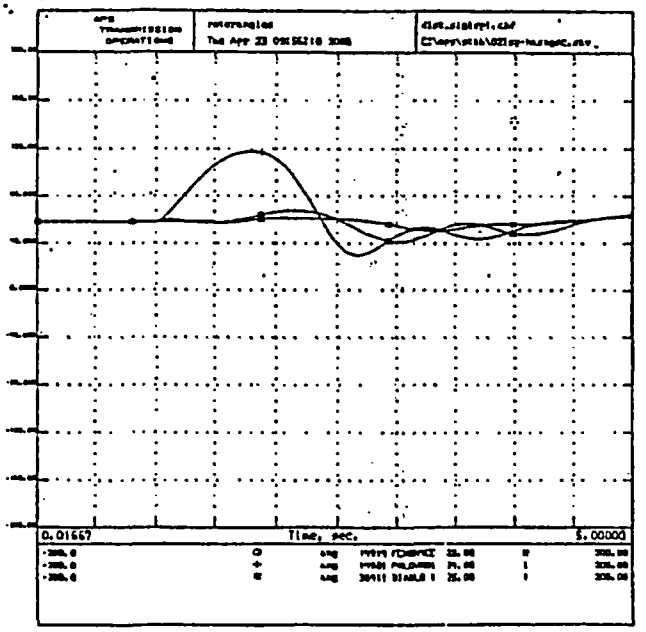

WESTERN SYSTEMS COORDINATING COUNCIL
2002 LSP2 OPERATING CASE
MAY 11, 2001
STAB. 3LG FAULT ON PV 500 KV BUS; TRIP PV-MAD OUT;1 C CLR FLT W/PV-MAD;
TC TRIP MCD160,MAL0,20% INDUCT. MOTORS;02_SP21.DYD

COMMENTS DUE TO AREA COORDINATORS MAY 18, 2001
AREA COORDINATOR COMMENTS DUE TO STAFF MAY 25, 2001

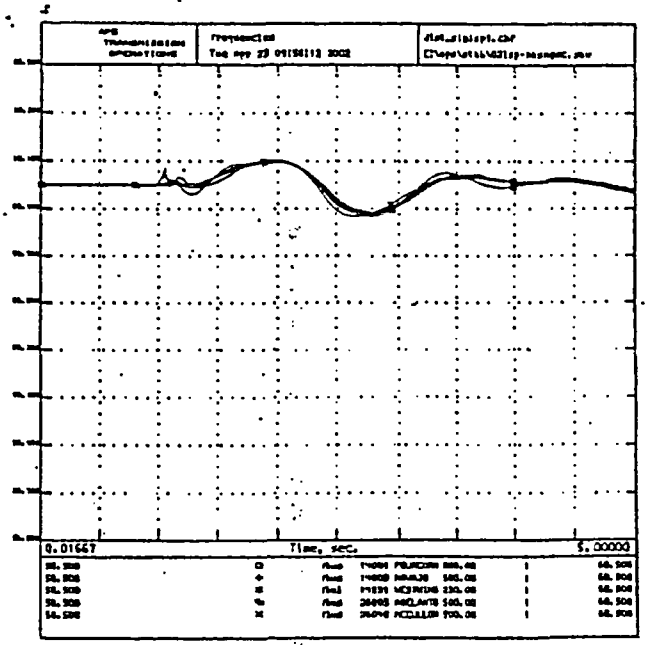

WESTERN SYSTEMS COORDINATING COUNCIL
2002 LSP2 OPERATING CASE
MAY 11, 2001
STAB. 3LG FAULT ON PV 500 KV BUS; TRIP PV-MAD OUT;1 C CLR FLT W/PV-MAD;
TC TRIP MCD160,MAL0,20% INDUCT. MOTORS;02_SP21.DYD

COMMENTS DUE TO AREA COORDINATORS MAY 18, 2001
AREA COORDINATOR COMMENTS DUE TO STAFF MAY 25, 2001

Arizona 500 & 345kV EHV System

AZ50045_hs01s.drw

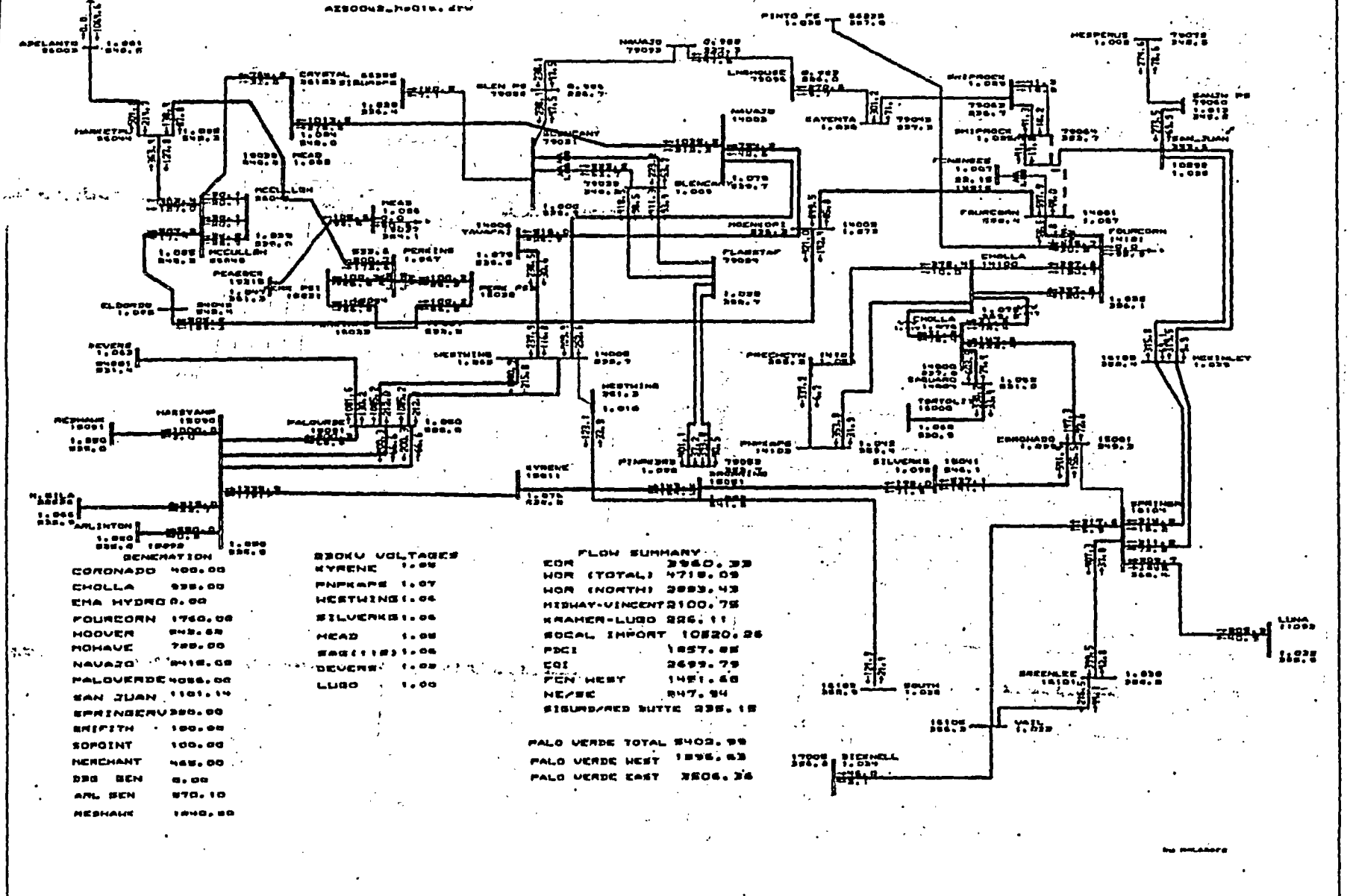

GENERATION

CORONADO	400.00
CHOLLA	935.00
CHA HYDRO	0.00
FOURCORN	1760.00
HOOVER	542.68
MOHAVE	799.00
NAVAJO	2418.00
PALOVERDE	4056.00
SAN JUAN	1101.14
SPRINGERV	250.00
SRIFITH	190.00
SOPOINT	100.00
MERCHANT	465.00
DSG GEN	0.00
ARL GEN	870.10
MESHAWK	1840.00

230KV VOLTAGES

KYRENE	1.05
PNPKAPS	1.07
WESTWING	1.04
SILVERKS	1.06
MEAD	1.08
SAG(118)	1.06
DEVERS	1.09
LUGO	1.00

FLOW SUMMARY

EOR	3960.33
WOR (TOTAL)	4719.09
WOR (NORTH)	2893.43
MIDWAY-VINCENT	2100.75
KRAMER-LUGO	226.11
SOCAL IMPORT	10520.26
PDCI	1857.85
COI	2699.79
PCN WEST	1481.60
NE/SE	847.94
SIGURD/RED BUTTE	235.15

PALO VERDE TOTAL	5402.99
PALO VERDE WEST	1896.63
PALO VERDE EAST	3506.36

General Electric International, Inc. PSLF Program

MW/MVAR

Tue Apr 23 13:27:45 2002

APS TRANSMISSION OPERATIONS

WESTERN SYSTEMS COORDINATING COUNCIL
2002 LSP2 OPERATING CASE
MAY 11, 2001

N.Gila-Miguel series comp. Bypassed
NGH GEN=1550MW

D- 02LSP-NGMIGSC1550.EAV

c:\ops\stab\az500_hassyampa.dr
c:\ops\stab\02lsp-ngmigsc1550.
Rating = 1

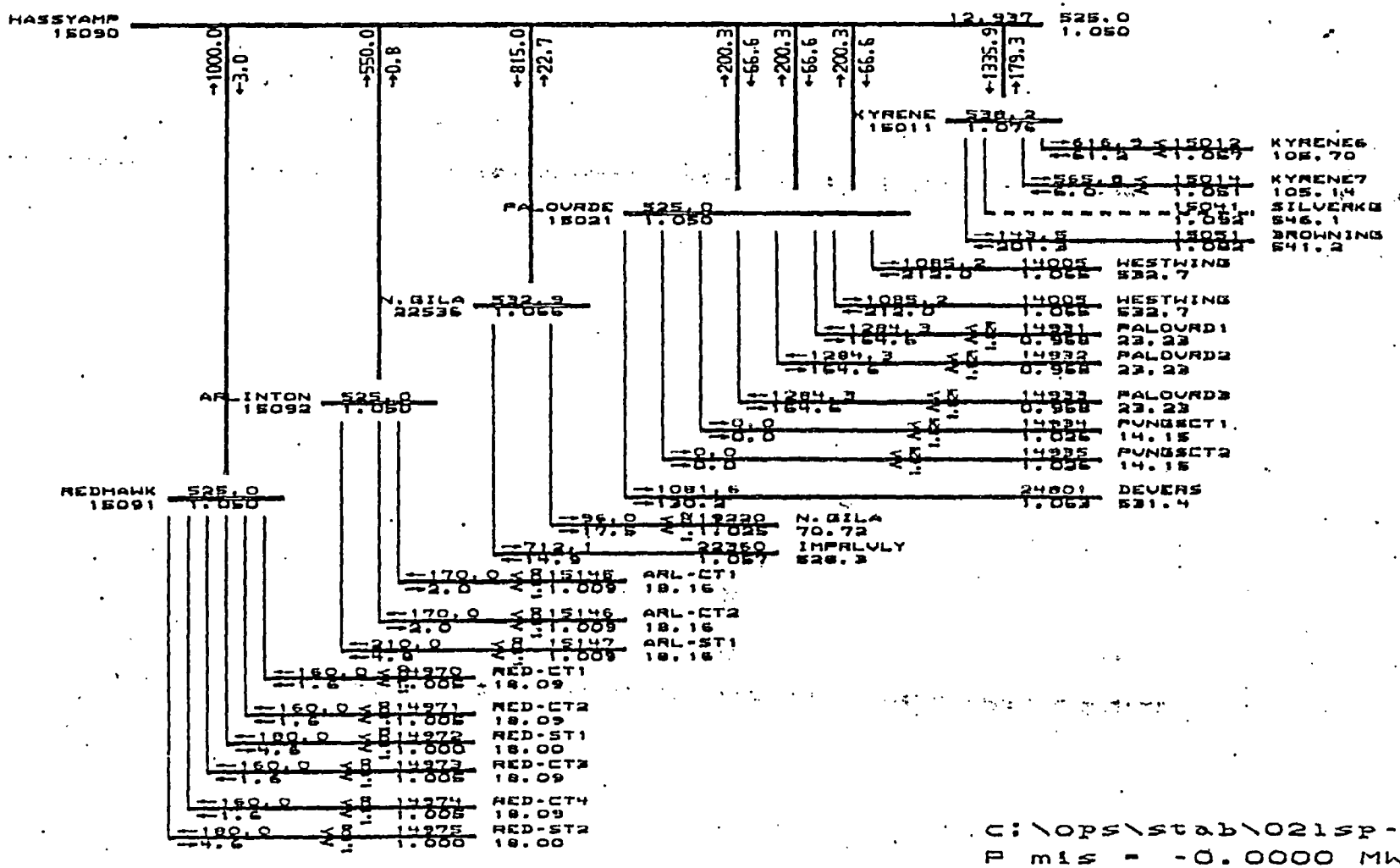

General Electric International, Inc. PSLF Program MW/MVAR Tue Apr 23 12:27:26 2002

APS TRANSMISSION OPERATIONS	WESTERN SYSTEMS COORDINATING COUNCIL 2002 LSP2 OPERATING CASE MAY 11, 2001	N.Gila-Miguel series comp. Bypassed NEW GEN=1550MW	c:\ops\stab\s2500_hassyamps.dr c:\ops\stab\021sp-mgmlgsc1550. Rating = 1

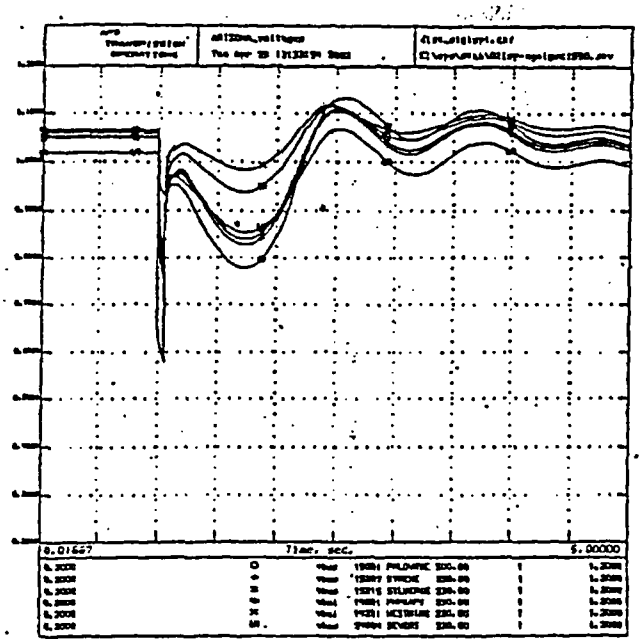

WESTERN SYSTEMS COORDINATING COUNCIL
2002 LSP2 OPERATING CASE
MAY 11, 2001
STAB, SLG FAULT ON PV 500 KV BUS;TWO PHASE OUT;1 C CLR FLT
TC TRIP NEBO,ARLA,20% INDUCT. MOTORS;02LSP21.SYD

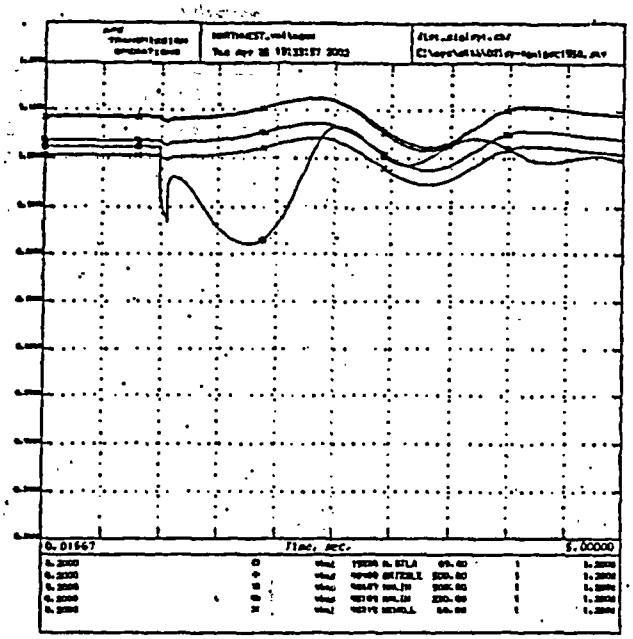

WESTERN SYSTEMS COORDINATING COUNCIL
2002 LSP2 OPERATING CASE
MAY 11, 2001
STAB, SLG FAULT ON PV 500 KV BUS;TWO PHASE OUT;1 C CLR FLT
TC TRIP NEBO,ARLA,20% INDUCT. MOTORS;02LSP21.SYD

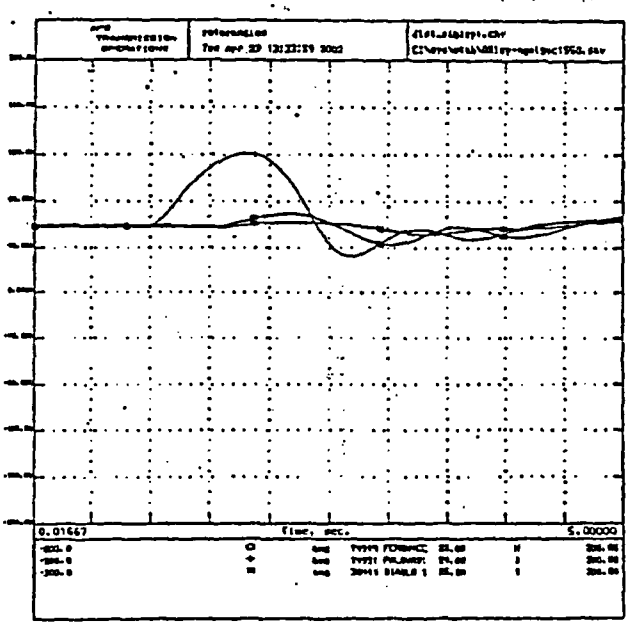

WESTERN SYSTEMS COORDINATING COUNCIL
2002 LSP2 OPERATING CASE
MAY 11, 2001
STAB, SLG FAULT ON PV 500 KV BUS;TWO PHASE OUT;1 C CLR FLT
TC TRIP NEBO,ARLA,20% INDUCT. MOTORS;02LSP21.SYD

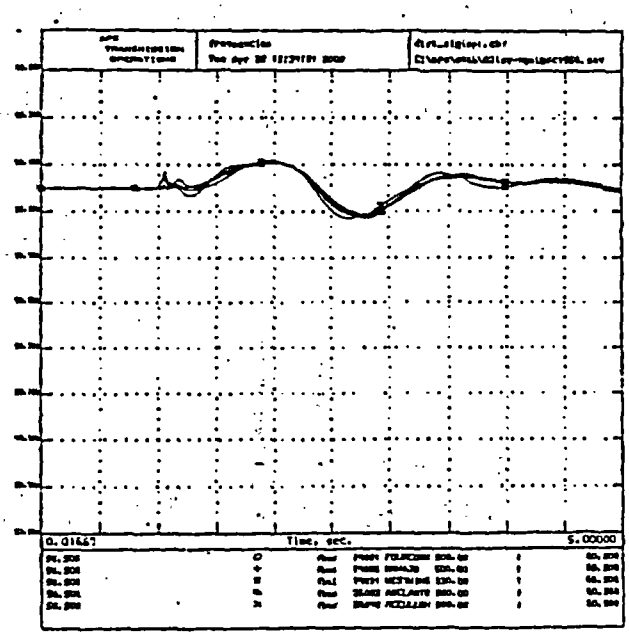

WESTERN SYSTEMS COORDINATING COUNCIL
2002 LSP2 OPERATING CASE
MAY 11, 2001
STAB, SLG FAULT ON PV 500 KV BUS;TWO PHASE OUT;1 C CLR FLT
TC TRIP NEBO,ARLA,20% INDUCT. MOTORS;02LSP21.SYD

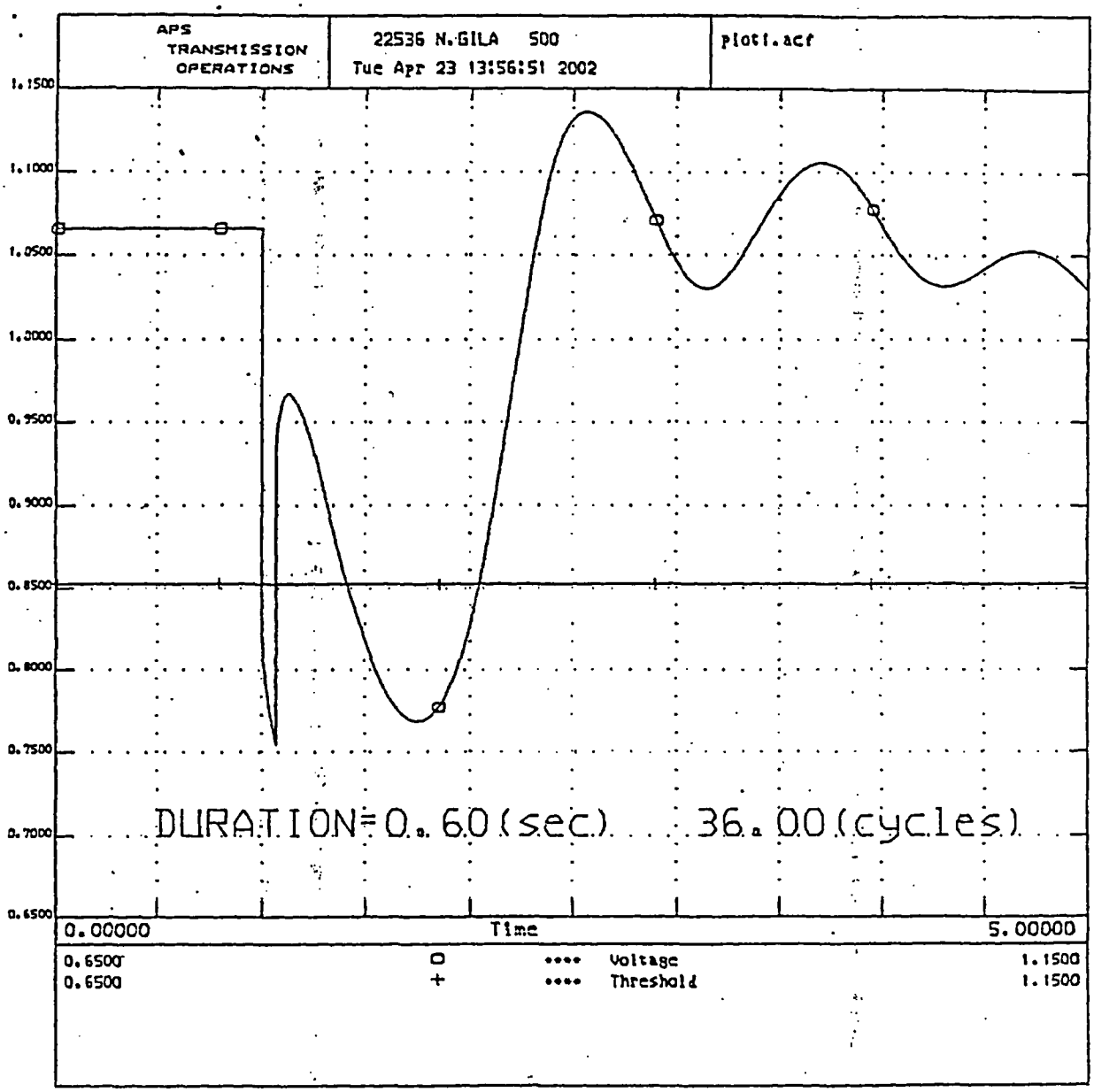

WESTERN SYSTEMS COORDINATING COUNCIL
2002 LSP2 OPERATING CASE
MAY 11, 2001
STAB, SLG FAULT ON PV 500 KV BUS;TWO PV-WWG OUT;4 C CLR FLT W/PV-WWG;
7c TRIP REDO,ARLO,20% INDUCT. MOTORS;02LSP21.DYD

Arizona 500 & 345kV EHV System

AZ500u2_h001a.drw

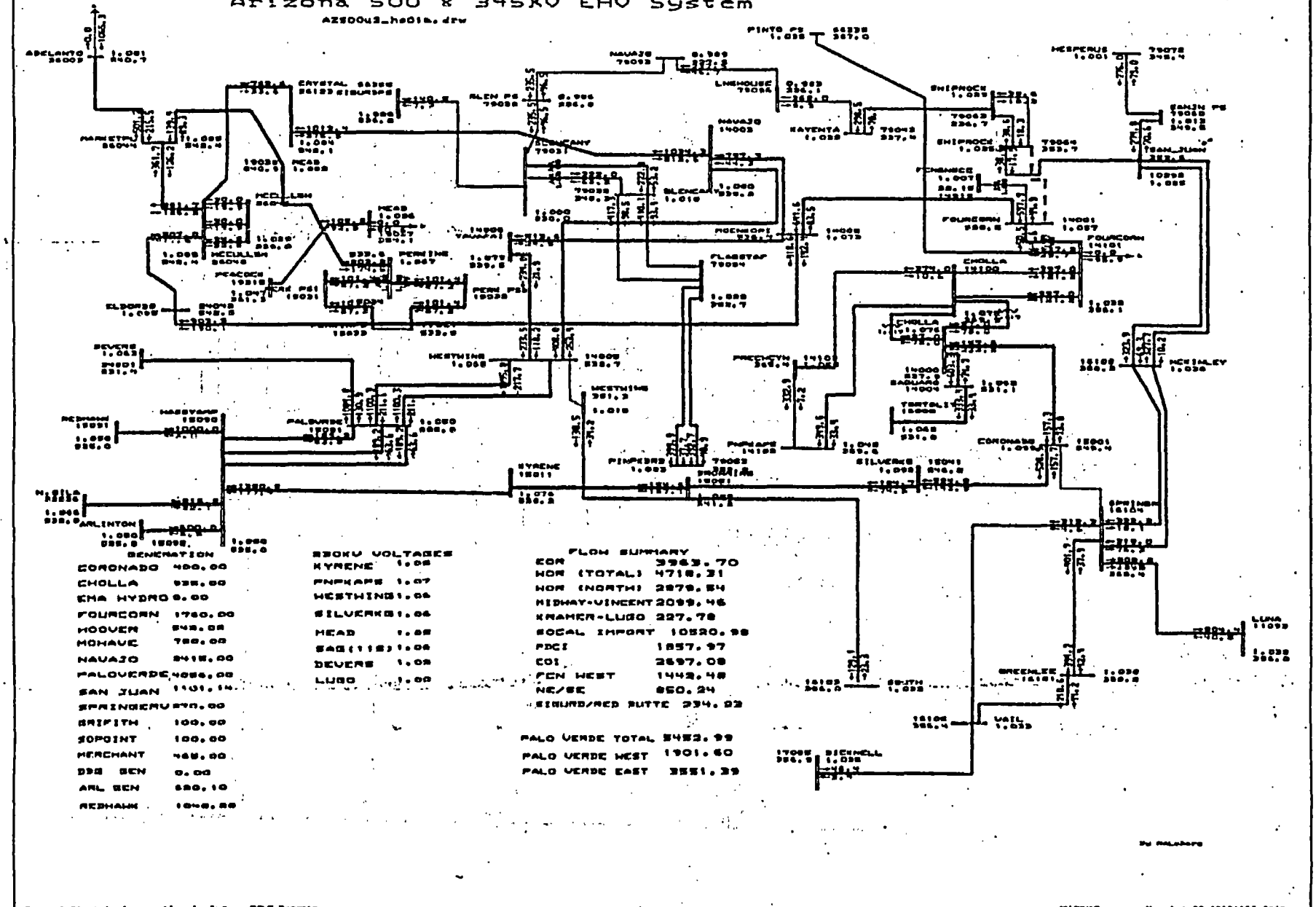

GENERATION	
CORONADO	400.00
CHOLLA	935.00
EMA HYDRO	0.00
FOURCORN	1760.00
HOOVER	545.00
MOHAVE	780.00
NAVAJO	2415.00
PALOVERDE	4056.00
SAN JUAN	1131.14
SPRINGERV	570.00
GRIFITH	100.00
SOPOINT	100.00
MERCHANT	465.00
DSR GEN	0.00
ARL GEN	550.10
REDHAWK	1040.50

500KV VOLTAGES	
KYRENE	1.05
PNPKAPS	1.07
WESTWING	1.06
SILVERKG	1.06
MEAD	1.05
SAG(115)	1.06
DEVERS	1.05
LUGO	1.00

FLOW SUMMARY	
EOR	3963.70
WOR (TOTAL)	4718.31
WOR (NORTH)	2879.54
MIDWAY-VINCENT	2099.46
KRAMER-LUGO	227.78
SOCAL IMPORT	10520.98
PDCI	1857.97
COI	2697.08
FCN WEST	1442.48
NE/SE	850.24
SIMURD/RED BUTTE	234.92

PALO VERDE TOTAL	5452.99
PALO VERDE WEST	1901.60
PALO VERDE EAST	3551.39

General Electric International, Inc. PSLF Program MU/MWR Mon Apr 22 12:31:32 2002

APS TRANSMISSION OPERATIONS	WESTERN SYSTEMS COORDINATING COUNCIL 2002 LSP2 OPERATING CASE MAY 11, 2001	N.Gila-Miguel series comp. bypassed DL-02LSP-NGMIGSC.SAV	c:\ops\stab\az500_hassyamp.dr c:\ops\stab\02lsp-ngmigsc.sav Rating = 1

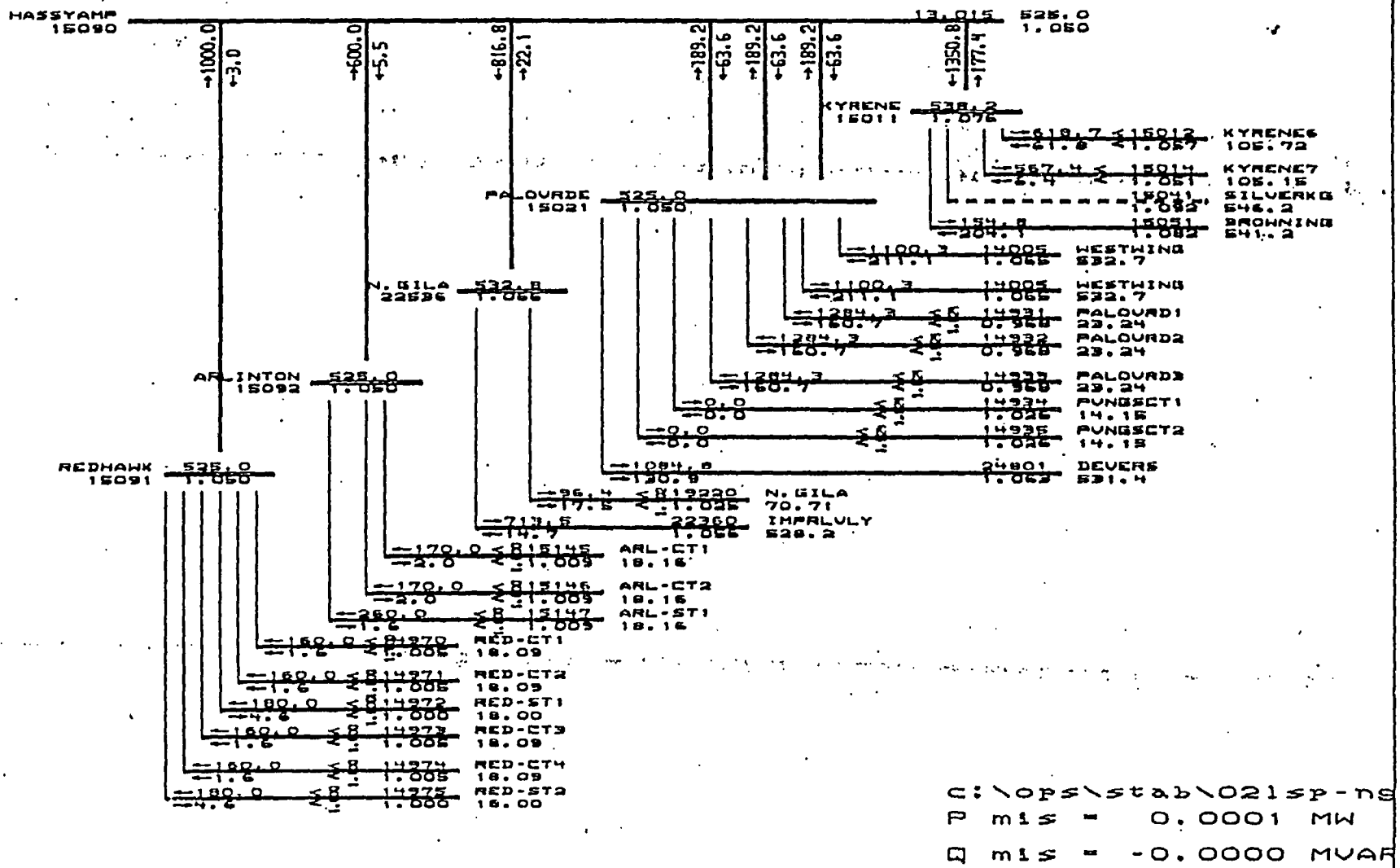
HASSYAMP 15090
13.015 525.0 1.050
KYRENE 15011 538.2 1.076
KYRENE6 15012 105.72
KYRENE7 15014 105.15
SILVERKG 15041 546.2
BROWNING 15051 541.2
PALOVRDE 15021 525.0 1.050
WESTWING 14005 532.7
N.GILA 22596 532.8 1.066
PALOVRD1 14931 23.24
PALOVRD2 14932 23.24
PALOVRD3 14933 23.24
ARLINTON 15092 525.0 1.050
PVNGSCT1 14934 14.15
PVNGSCT2 14935 14.15
REDHAWK 15091 525.0 1.050
DEVERS 24801 531.4
N.GILA 70.71
IMPRLVLY 22360 528.2
ARL-CT1 15145 18.16
ARL-CT2 15146 18.16
ARL-ST1 15147 18.16
RED-CT1 14970 18.09
RED-CT2 14971 18.09
RED-ST1 14972 18.00
RED-CT3 14973 18.09
RED-CT4 14974 18.09
RED-ST2 14975 18.00
c:\ops\stab\021sp-ns
P mis = 0.0001 MW
Q mis = -0.0000 MVAR
MW/MVAR
Mon Apr 22 12:31:47 2002
General Electric International, Inc.
PSLF Program
APS TRANSMISSION OPERATIONS
WESTERN SYSTEMS COORDINATING COUNCIL
2002 LSP2 OPERATING CASE
MAY 11, 2001
N.Gila-Miguel series comp. bypassed
c:\ops\stab\x2500_hassyamp.dr
c:\ops\stab\021sp-nomlgsc.sav
Rating: 1

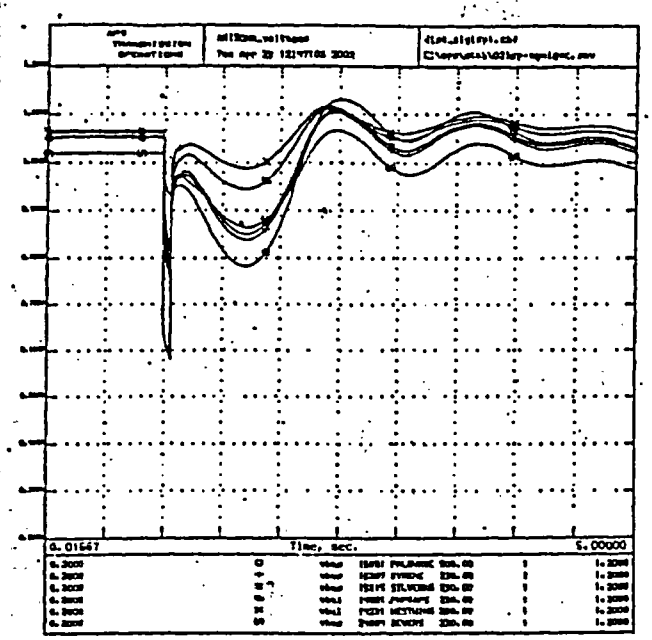

WESTERN SYSTEMS COORDINATING COUNCIL
2002 LSP2 OPERATING CASE
MAY 11, 2001
STAB, SLG FAULT ON PV 500 KV BUS(TWO PH-AB) BUT(1 C CLR FLT W/PH-AB)
TC TRIP RC3160,68LS,30K DUALCT, MOTORS(OLSP21.DYD

Maximum-Minimal Series Comp. Bypassed

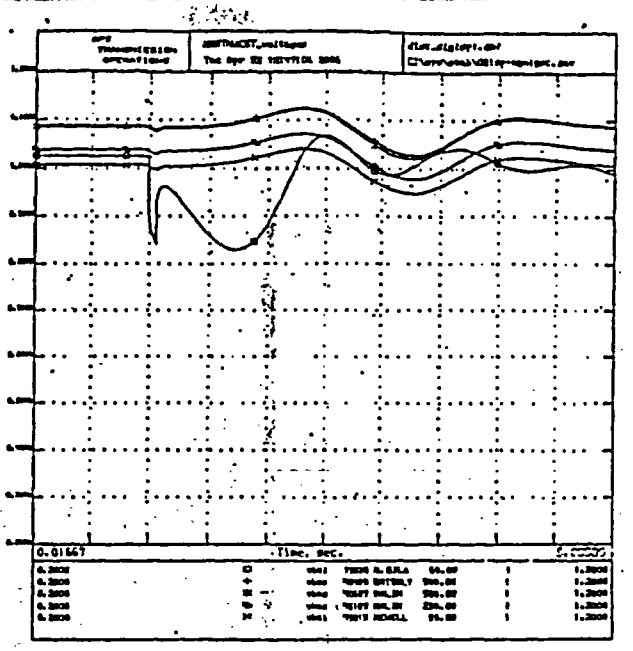

WESTERN SYSTEMS COORDINATING COUNCIL
2002 LSP2 OPERATING CASE
MAY 11, 2001
STAB, SLG FAULT ON PV 500 KV BUS(TWO PH-AB) BUT(1 C CLR FLT W/PH-AB)
TC TRIP RC3160,68LS,30K DUALCT, MOTORS(OLSP21.DYD

Maximum-Minimal Series Comp. Bypassed

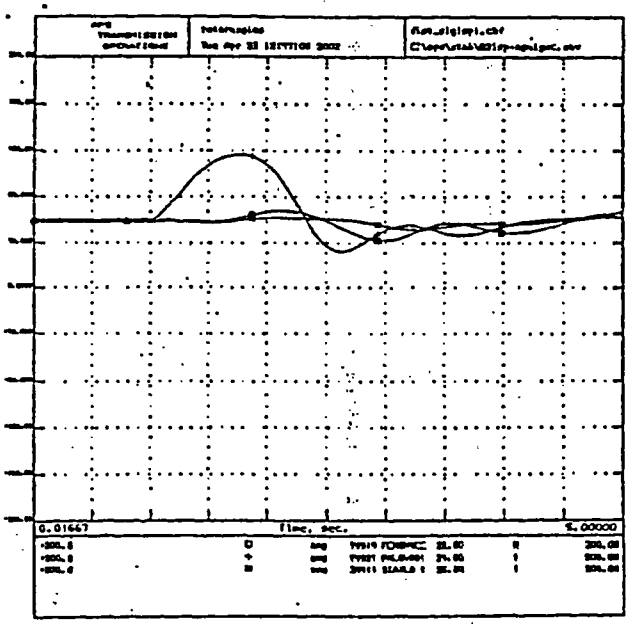

WESTERN SYSTEMS COORDINATING COUNCIL
2002 LSP2 OPERATING CASE
MAY 11, 2001
STAB, SLG FAULT ON PV 500 KV BUS(TWO PH-AB) BUT(1 C CLR FLT W/PH-AB)
TC TRIP RC3160,68LS,30K DUALCT, MOTORS(OLSP21.DYD

Maximum-Minimal Series Comp. Bypassed

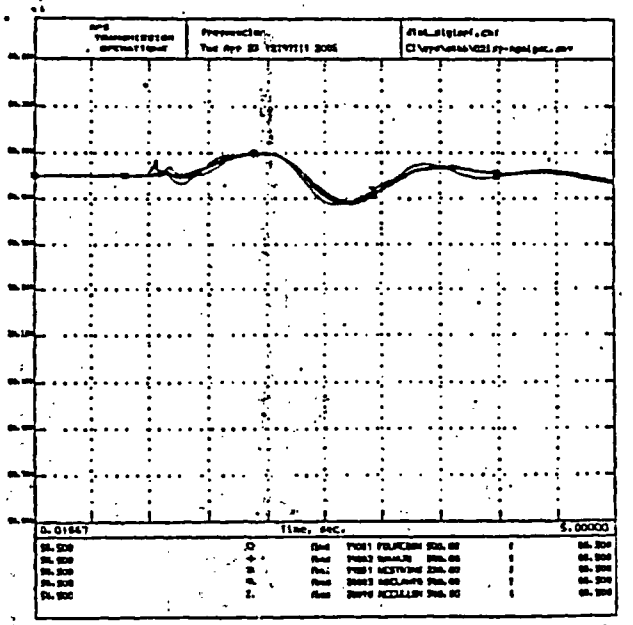

WESTERN SYSTEMS COORDINATING COUNCIL
2002 LSP2 OPERATING CASE
MAY 11, 2001
STAB, SLG FAULT ON PV 500 KV BUS(TWO PH-AB) BUT(1 C CLR FLT W/PH-AB)
TC TRIP RC3160,68LS,30K DUALCT, MOTORS(OLSP21.DYD

Maximum-Minimal Series Comp. Bypassed

Arizona 500 & 345KV EHV System

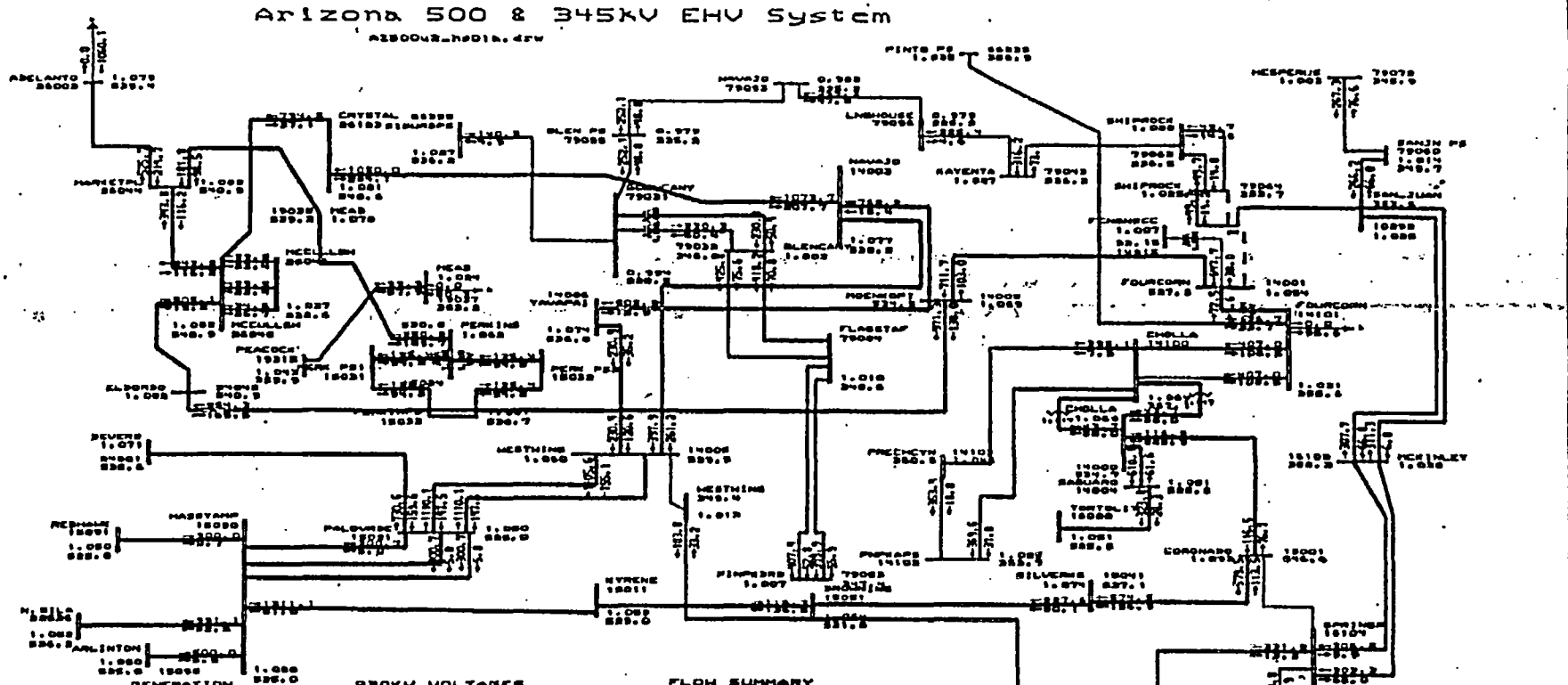

GENERATION	
CORONADO	440.00
CHOLLA	935.00
EMA HYDRO	0.00
FOURCORN	1660.00
HOOVER	547.48
MOHAVE	790.00
NAVAJO	2415.00
PALOVERDE	4088.00
SAN JUAN	1101.14
SPRINGERV	400.00
GRIFITH	100.00
SOPOINT	100.00
MERCHANT	465.00
DSG GEN	0.00
ARL GEN	520.10
REDHAWK	640.00

230KV VOLTAGES	
HYRENE	1.03
PNPKAPS	1.05
WESTWING	1.05
SILVERKN	1.04
MEAD	1.05
SAG(118)	1.05
DEVERS	1.05
LUGO	1.00

FLOW SUMMARY	
EOR	3927.99
WOR (TOTAL)	4484.00
WOR (NORTH)	3022.41
MIDWAY-VINCENT	2136.23
KRAMER-LUGO	826.55
SOCAL IMPORT	10521.69
PDCI	1857.44
COI	2730.22
PGN WEST	1534.26
NE/SE	816.74
SIGURD/RED BUTTE	222.13

PALO VERDE TOTAL 5253.00
PALO VERDE WEST 1721.74
PALO VERDE EAST - 3531.27

General Electric International, Inc. PSLF Program PSH/PVAR Tue Apr 23 12:21:52 2002

43

APS TRANSMISSION, OPERATIONS

WESTERN SYSTEMS COORDINATING COUNCIL
2002 LSP2 OPERATING CASE
MAY 11, 2001

PALO VERDE-DEVERS series comp. Bypassed
Hass. Gen = 1400MW
F- 02LSP-PVDVSC1400.SAV

c:\ops\stab\azSOO.hassyampa.dr
c:\ops\stab\02lsp-pvdvsc1400.s
Rating = 1

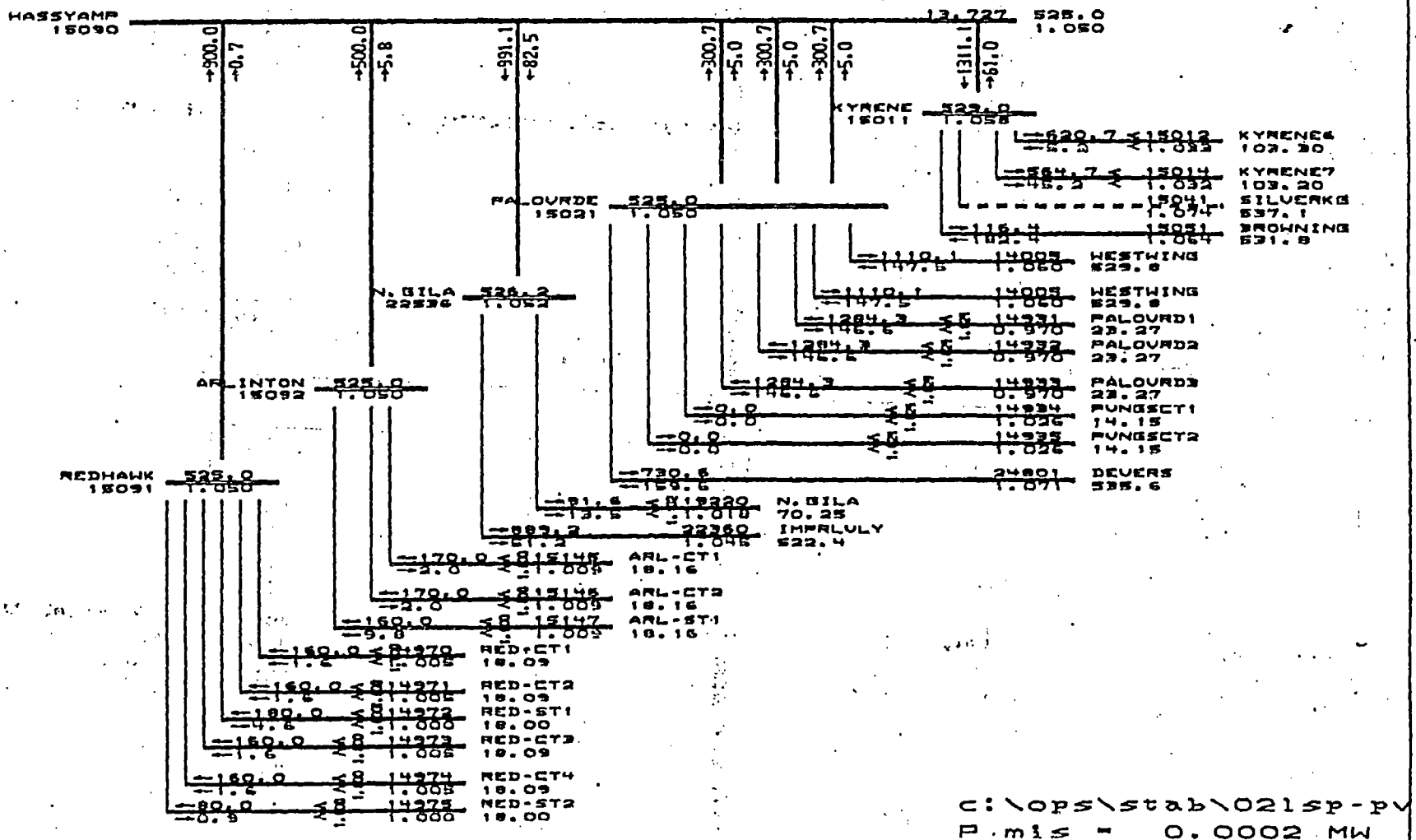

General Electric International, Inc. PSLF Program

APS TRANSMISSION, OPERATIONS

WESTERN SYSTEMS COORDINATING COUNCIL
2002 LSP2 OPERATING CASE
MAY 11, 2001

PALO VERDE-DEVERS series comp. Bypassed
Hass. Gen = 1400MW

MW/MVAR

Tue Apr 23 12:21:37 2002
c:\ops\stab\az500_hassyamp.dr
c:\ops\stab\021sp-pv(vsc1400.s
Rating = 1

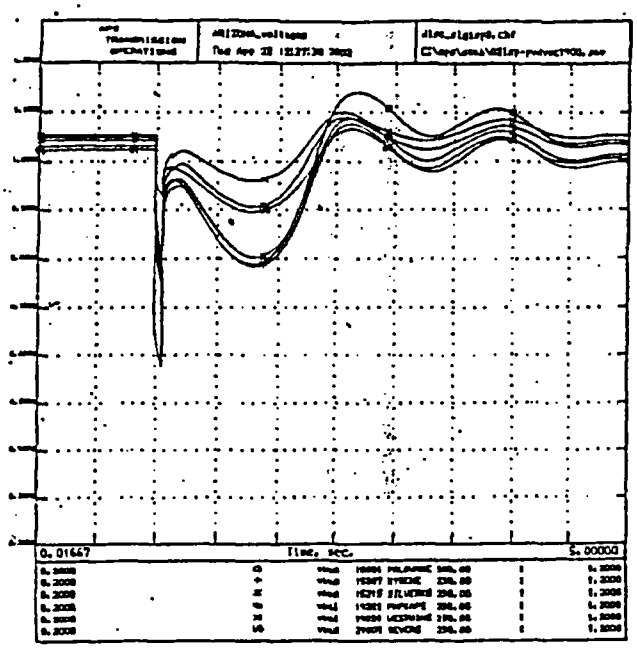

WESTERN SYSTEMS COORDINATING COUNCIL
2002 LSPS OPERATING CASE
MAY 11, 2001
STAB, SLG FAULT ON PV 500 KV BUS;TWO PHASE OUT;9 C CLR FLT W/PV-WAG;
7C TRIP WCOB,ARLB,20% INDUCT. MOTORS;03,SP21,P9

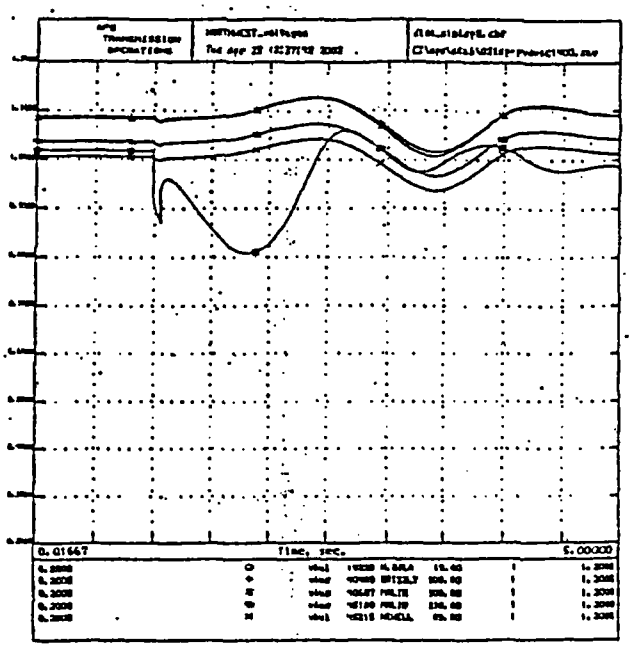

WESTERN SYSTEMS COORDINATING COUNCIL
2002 LSPS OPERATING CASE
MAY 11, 2001
STAB, SLG FAULT ON PV 500 KV BUS;TWO PHASE OUT;9 C CLR FLT W/PV-WAG;
7C TRIP WCOB,ARLB,20% INDUCT. MOTORS;03,SP21,P9

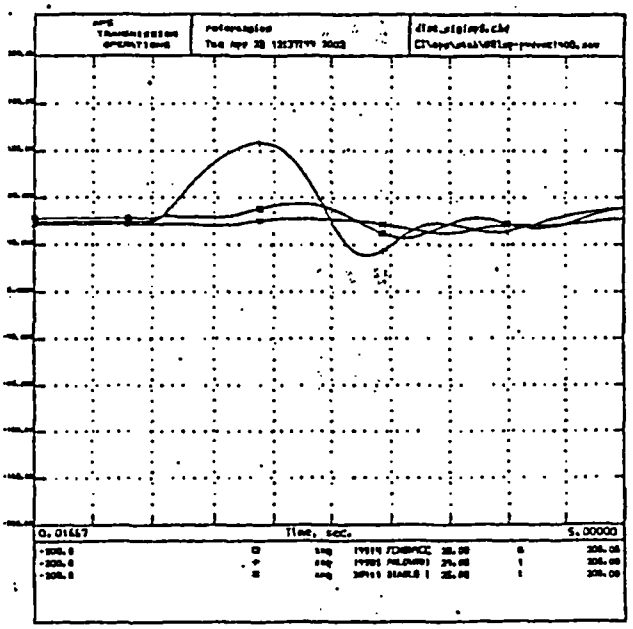

WESTERN SYSTEMS COORDINATING COUNCIL
2002 LSPS OPERATING CASE
MAY 11, 2001
STAB, SLG FAULT ON PV 500 KV BUS;TWO PHASE OUT;9 C CLR FLT W/PV-WAG;
7C TRIP WCOB,ARLB,20% INDUCT. MOTORS;03,SP21,P9

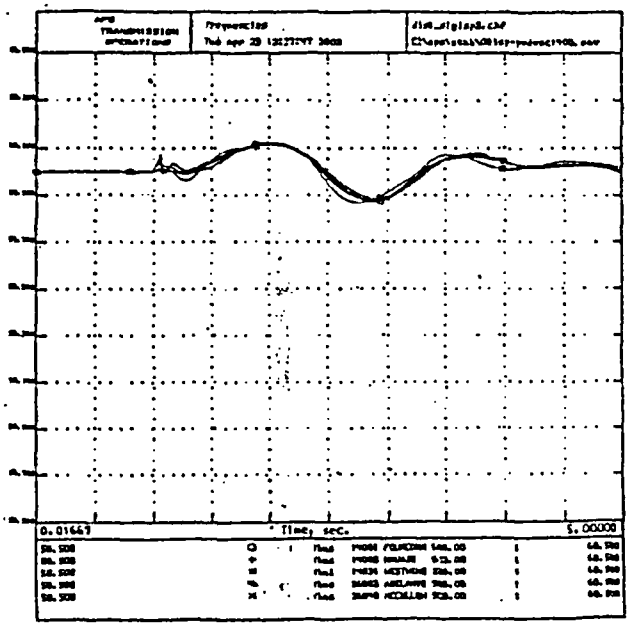

WESTERN SYSTEMS COORDINATING COUNCIL
2002 LSPS OPERATING CASE
MAY 11, 2001
STAB, SLG FAULT ON PV 500 KV BUS;TWO PHASE OUT;9 C CLR FLT W/PV-WAG;
7C TRIP WCOB,ARLB,20% INDUCT. MOTORS;03,SP21,P9

Arizona 500 & 345kV EHV System

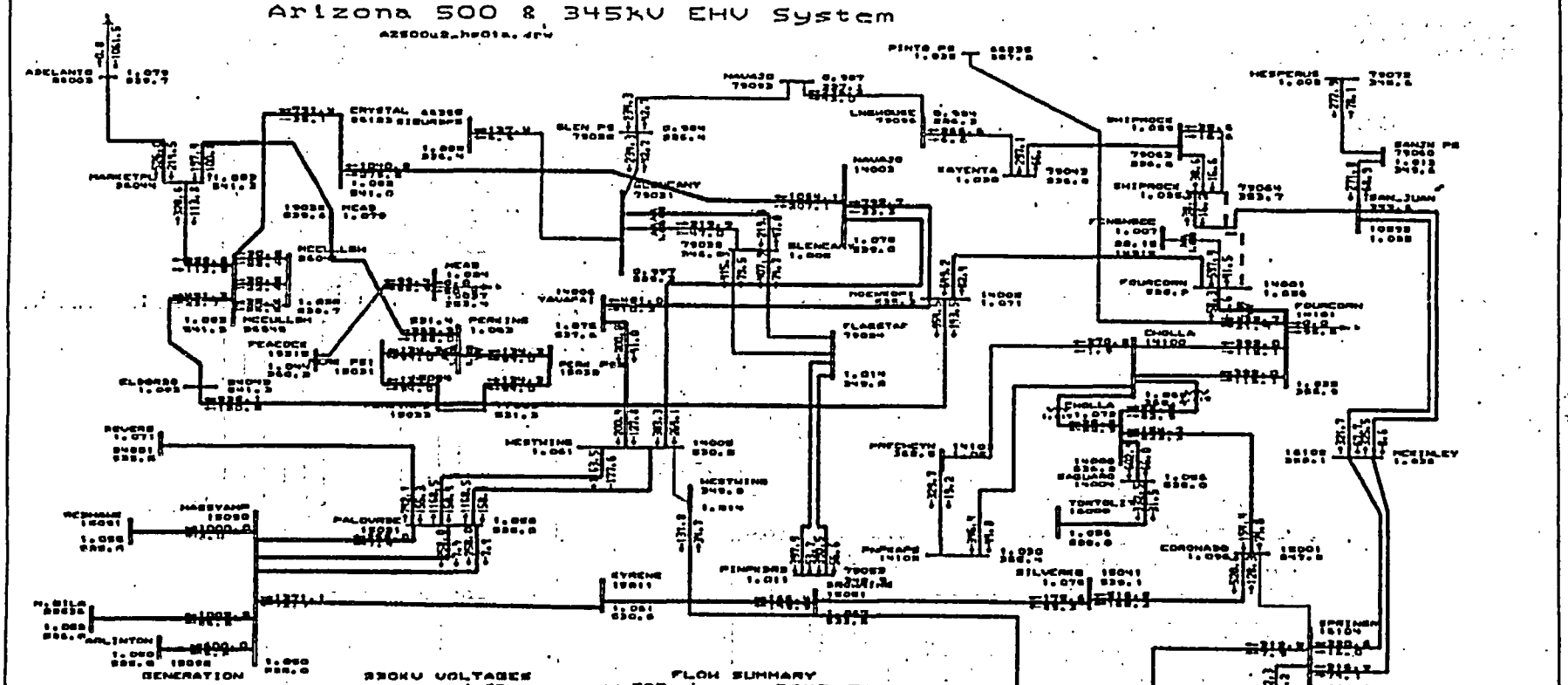

GENERATION	
CORONADO	400.00
CHOLLA	935.00
EMA HYDRO	0.00
FOURCORN	1760.00
HOOVER	841.70
MOHAVE	789.40
NAVAJO	2415.00
PALOVERDE	4026.00
SAN JUAN	1101.14
SPRINGERV	370.00
GRIFITH	100.00
SOPOINT	100.00
MERCHANT	465.00
DOG GEN	0.00
ARL GEN	680.10
REDHAWK	1040.00

230KV VOLTAGES	
KYRENE	1.02
PNPKARS	1.02
WESTWING	1.04
SILVERKG	1.02
MEAD	1.02
EAG(115)	1.02
DEVERS	1.02
LUGO	1.00

FLOW SUMMARY	
EOR	3343.79
WOR (TOTAL)	4704.72
WOR (NORTH)	3023.67
HIDWAY-VINCENT	2115.04
KRAMER-LUGO	226.60
SOCAL IMPORT	10521.40
PDCI	1857.58
COI	2707.83
FCN WEST	1440.17
NE/SE	839.44
SIGURD/RED BUTTE	235.45

PALO VERDE TOTAL	5453.00
PALO VERDE WEST	1744.89
PALO VERDE EAST	3708.11

General Electric International, Inc. PSLF Program

41	APS TRANSMISSION OPERATIONS	WESTERN SYSTEMS COORDINATING COUNCIL 2002 LSP2 OPERATING CASE MAY 11, 2001	PV-DEVERS SC OUT E1- 02LSP-PVDUSC.SAV

Tue Apr 23 10:19:43 2002
c:\ops\stal\az500_hassyamp.dr
c:\ops\stal\02lsp-pvdvsc.sav
Rating = 1

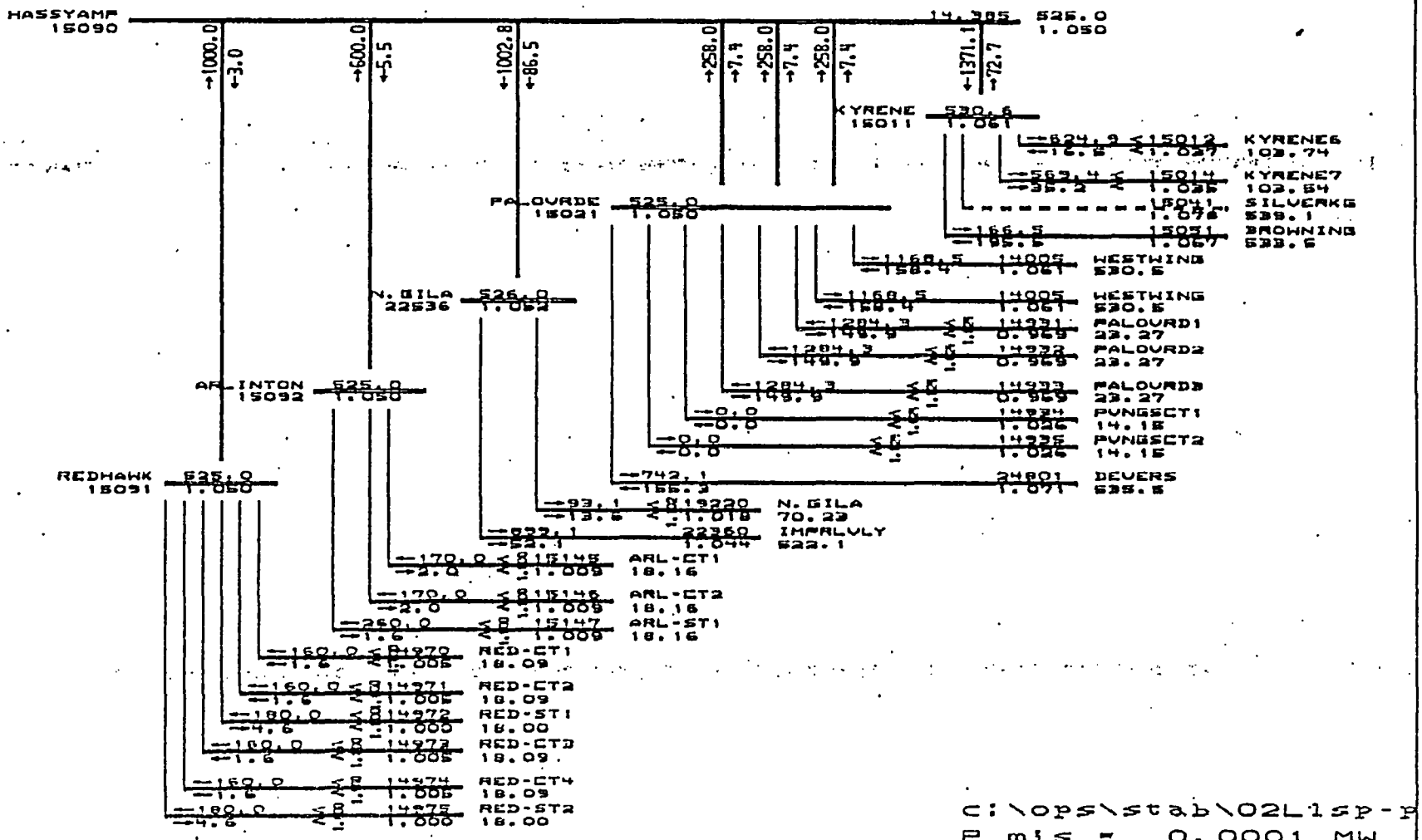

General Electric International, Inc. PSLF Program MW/MVAR Tue Apr 23 10:13:10: 2002

APS TRANSMISSION OPERATIONS	WESTERN SYSTEMS COORDINATING COUNCIL 2002 LSP2 OPERATING CASE MAY 11, 2001	PV-DEVERS SC OUT	c:\ops\stab\az500_hassyamp.dr c:\ops\stab\02L1sp-pvdvsc.sav Rating = 1

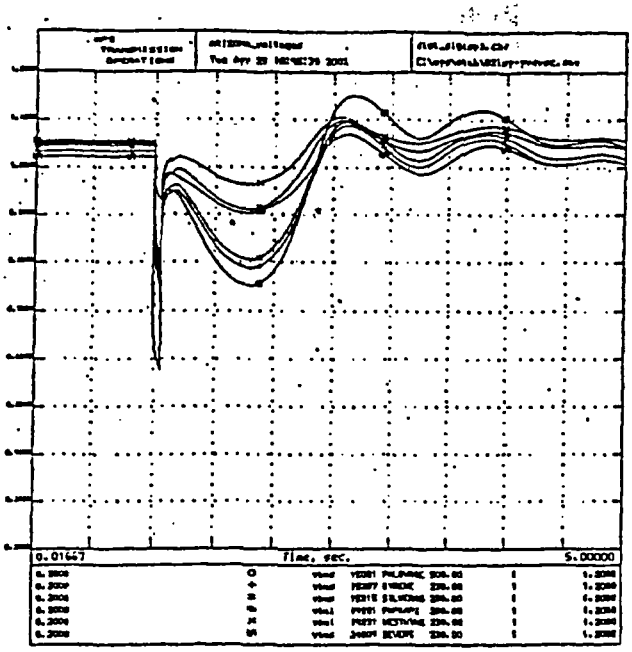

WESTERN SYSTEMS COORDINATING COUNCIL
2001 LSP2 OPERATING CASE
MAY 11, 2001
STAB, SLG FAULT ON PV 500 KV BUS(TWO PH-NAG OUT)+ C CLR FLT W/PH-NAG;
TC TRIP RC3500,AR,B,30X DIRECT. MOTORS(03_SP21.3T0

COMMENTS DUE TO AREA COORDINATORS MAY 18, 2001
AREA COORDINATOR COMMENTS DUE TO STAFF MAY 25, 2001

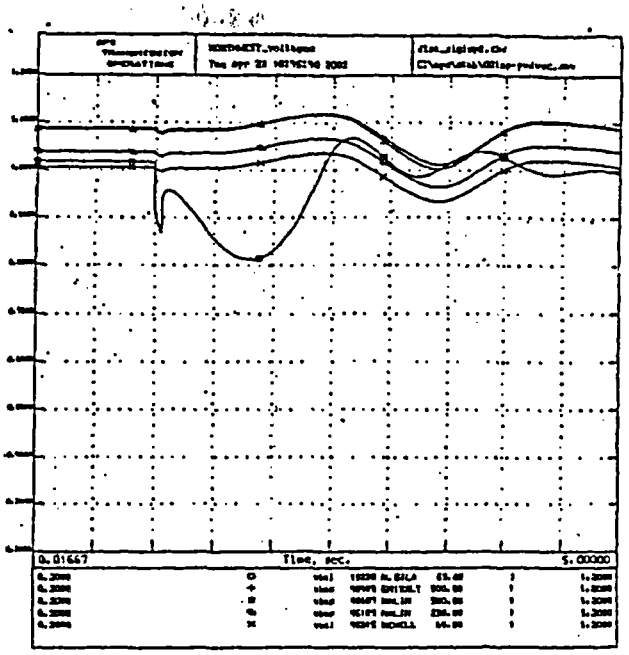

WESTERN SYSTEMS COORDINATING COUNCIL
2001 LSP2 OPERATING CASE
MAY 11, 2001
STAB, SLG FAULT ON PV 500 KV BUS(TWO PH-NAG OUT)+ C CLR FLT W/PH-NAG;
TC TRIP RC3500,AR,B,30X DIRECT. MOTORS(03_SP21.3T0

COMMENTS DUE TO AREA COORDINATORS MAY 18, 2001
AREA COORDINATOR COMMENTS DUE TO STAFF MAY 25, 2001

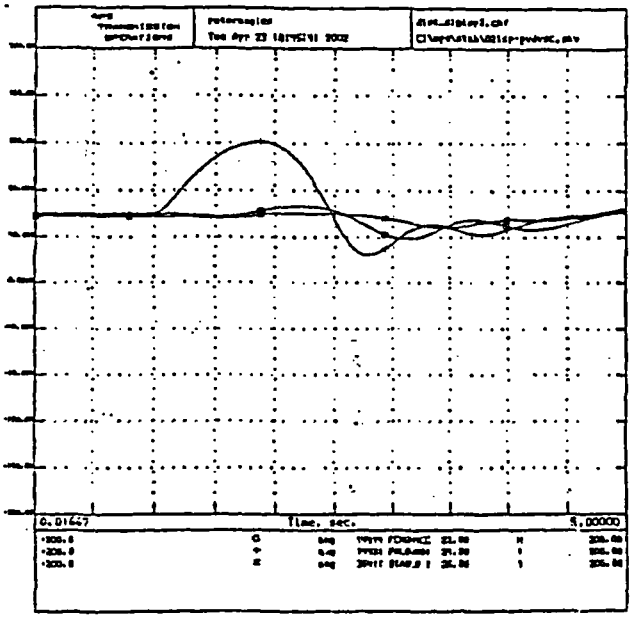

WESTERN SYSTEMS COORDINATING COUNCIL
2001 LSP2 OPERATING CASE
MAY 11, 2001
STAB, SLG FAULT ON PV 500 KV BUS(TWO PH-NAG OUT)+ C CLR FLT W/PH-NAG;
TC TRIP RC3500,AR,B,30X DIRECT. MOTORS(03_SP21.3T0

COMMENTS DUE TO AREA COORDINATORS MAY 18, 2001
AREA COORDINATOR COMMENTS DUE TO STAFF MAY 25, 2001

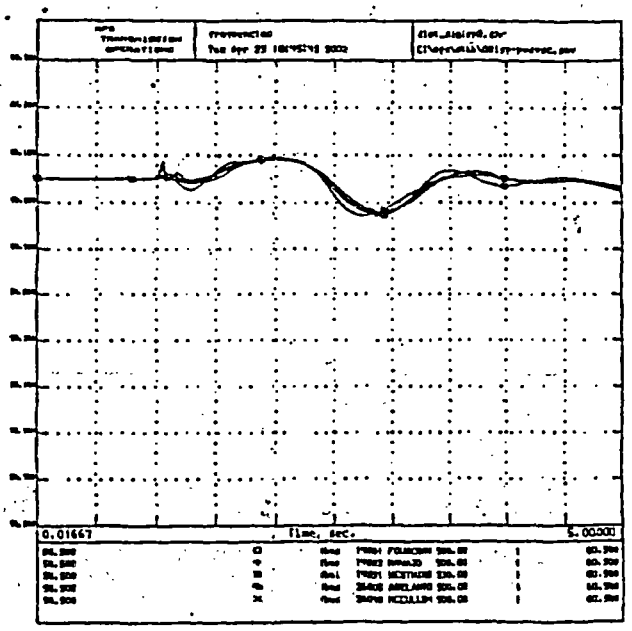

WESTERN SYSTEMS COORDINATING COUNCIL
2001 LSP2 OPERATING CASE
MAY 11, 2001
STAB, SLG FAULT ON PV 500 KV BUS(TWO PH-NAG OUT)+ C CLR FLT W/PH-NAG;
TC TRIP RC3500,AR,B,30X DIRECT. MOTORS(03_SP21.3T0

COMMENTS DUE TO AREA COORDINATORS MAY 18, 2001
AREA COORDINATOR COMMENTS DUE TO STAFF MAY 25, 2001

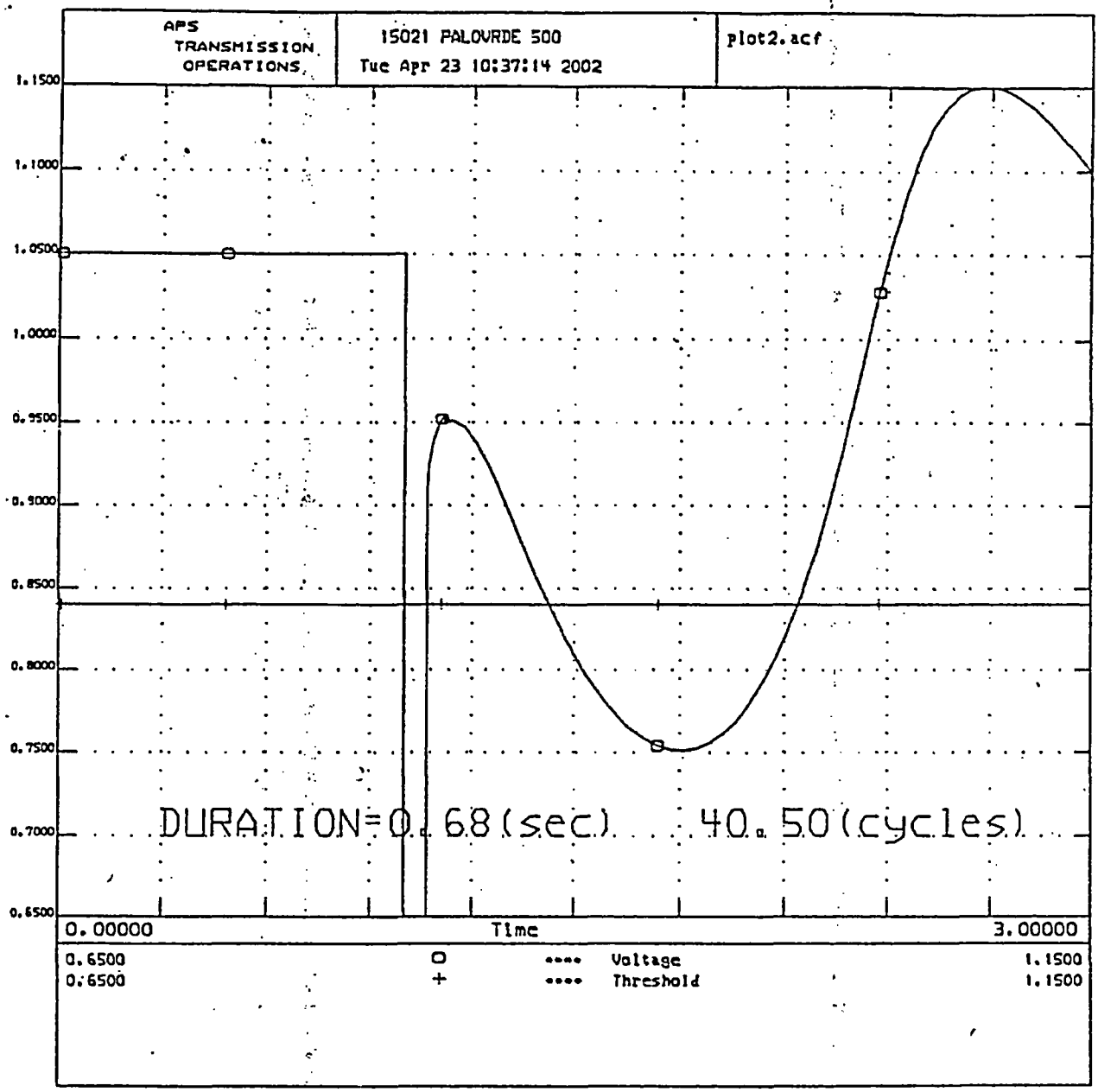

WESTERN SYSTEMS COORDINATING COUNCIL
2002 LSP2 OPERATING CASE
MAY 11, 2001
STAB, SLG FAULT ON PV 500 KV BUS;TWO PV-WWG OUT;4 C CLR FLT W/PV-WWG;
7c TRIP RED500,ARL0,20% INDUCT. MOTORS;02LSP21.DYD .

COMMENTS DUE TO AREA COORDINATORS MAY 18, 2001
AREA COORDINATOR COMMENTS DUE TO STAFF MAY 25, 2001

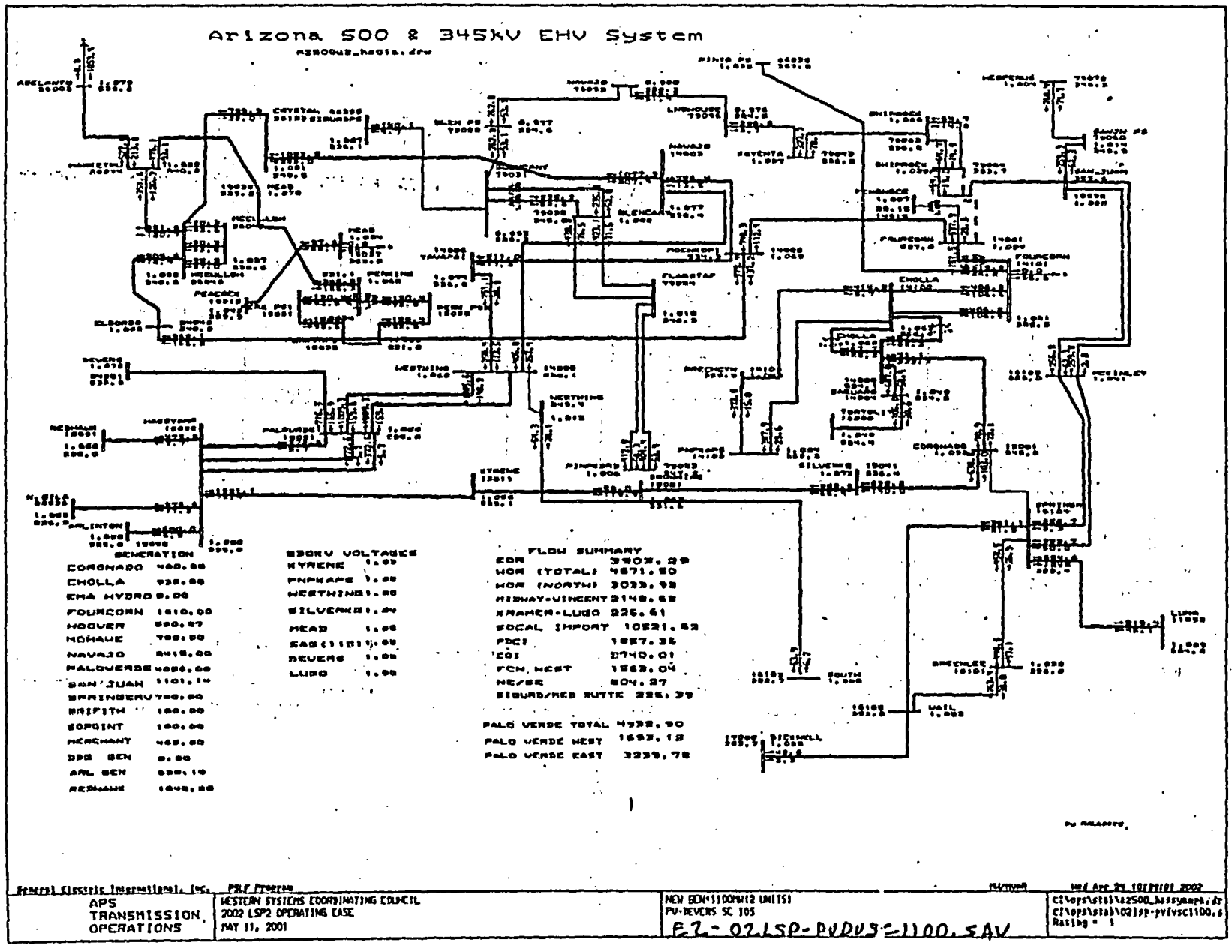

General Electric International, Inc.	PSLF Program		Wed Apr 24, 10:29:01 2002
APS TRANSMISSION OPERATIONS	WESTERN SYSTEMS COORDINATING COUNCIL 2002 LSP2 OPERATING CASE MAY 11, 2001	NEW EON=1100MW(2 UNITS) PV-DEVERS SC 105 E2-02LSP-PVDVS-1100.SAV	c:\ops\stab\x2500_hassymap.dr c:\ops\stab\02lsp-pvdvsc1100.s Rating = 1

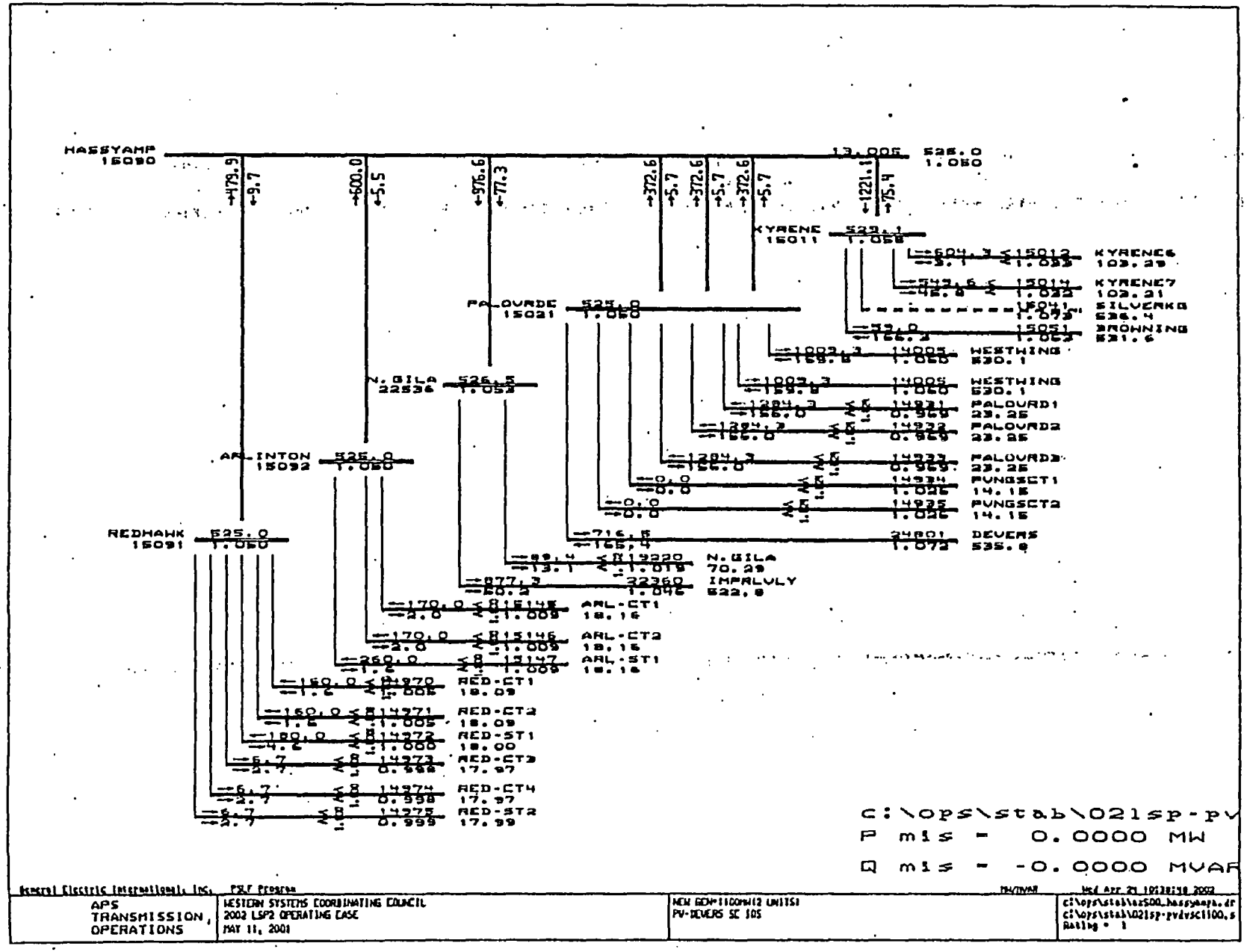
HASSYAMP 15090
13.005 525.0 1.050
KYRENE 15011 523.1 1.058
KYRENE6 103.29
KYRENE7 103.21
SILVERKG 536.4
BROWNING 531.6
WESTWING 530.1
PALOVRD1 23.25
PALOVRD2 23.25
PALOVRD3 23.25
PVNGSCT1 14.15
PVNGSCT2 14.15
DEVERS 535.0
PALOVRDE 15021 525.0 1.050
N.GILA 22536 526.5 1.052
ARLINTON 15092 525.0 1.050
REDHAWK 15091 525.0 1.050
N.GILA 70.29
IMPRLVLY 522.0
ARL-CT1 18.16
ARL-CT2 18.16
ARL-ST1 18.16
RED-CT1 18.09
RED-CT2 18.09
RED-ST1 18.00
RED-CT3 17.97
RED-CT4 17.97
RED-ST2 17.99
c:\ops\stab\021sp-pv
P mis = 0.0000 MW
Q mis = -0.0000 MVAR
General Electric International, Inc. PSLF Program
APS TRANSMISSION OPERATIONS
WESTERN SYSTEMS COORDINATING COUNCIL
2002 LSP2 OPERATING CASE
MAY 11, 2001
NEW GEN=1100MW12 UNITS1
PV-DEVERS SC 105
Wed Apr 24 10:38:58 2002
Rating = 1

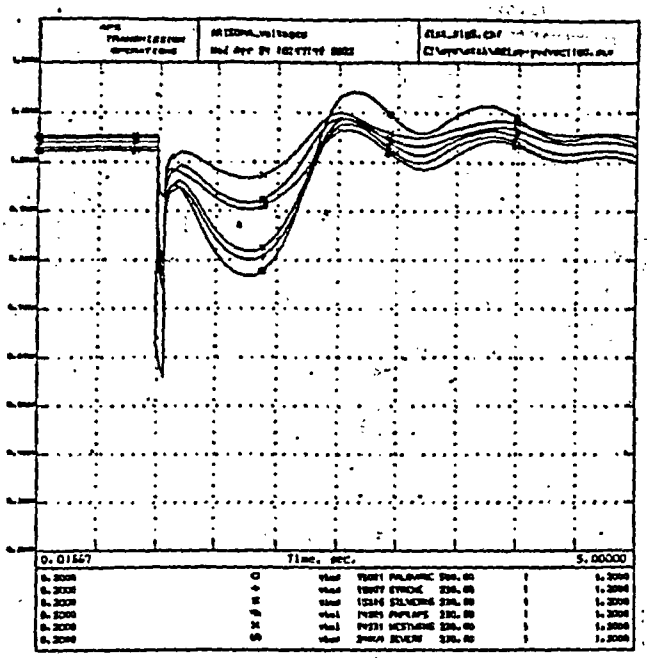

WESTERN SYSTEMS COORDINATING COUNCIL
2002 LSP3 OPERATING CASE
MAY 11, 2001
STAB, SLG FAULT ON PV 500 KV BUS; TWO PH-GND OUTS C CLR FLT W/PV-GND;
TC TRIP RCSO,ARLS,20K IMPACT, MOTORS1GS,SP21,SV3

COMMENTS DUE TO AREA COORDINATORS MAY 18, 2001
AREA COORDINATOR COMMENTS DUE TO STAFF MAY 25, 2001

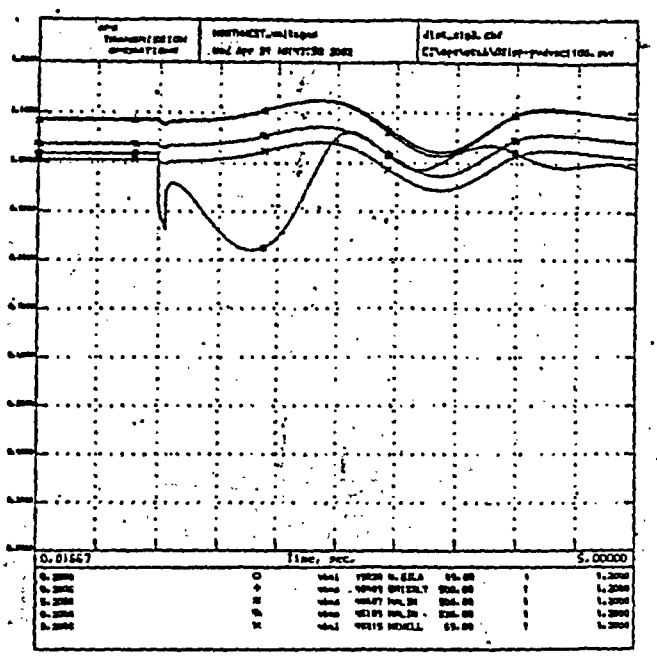

WESTERN SYSTEMS COORDINATING COUNCIL
2002 LSP3 OPERATING CASE
MAY 11, 2001
STAB, SLG FAULT ON PV 500 KV BUS; TWO PH-GND OUTS C CLR FLT W/PV-GND;
TC TRIP RCSO,ARLS,20K IMPACT, MOTORS1GS,SP21,SV3

COMMENTS DUE TO AREA COORDINATORS MAY 18, 2001
AREA COORDINATOR COMMENTS DUE TO STAFF MAY 25, 2001

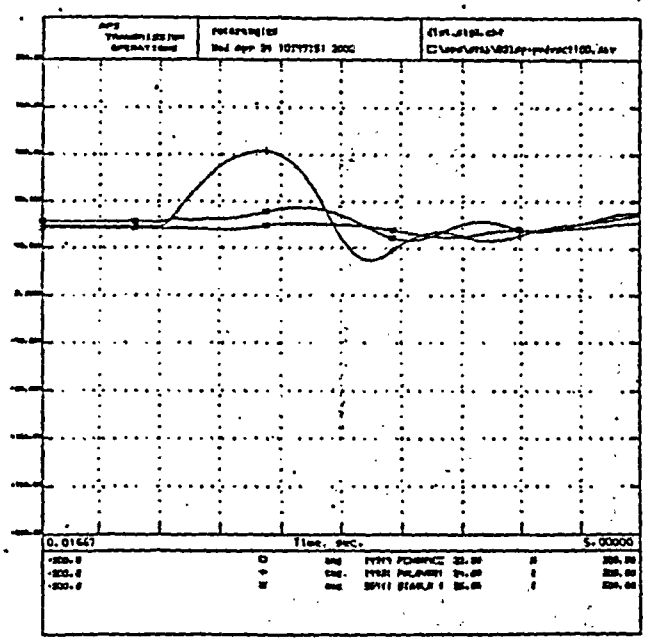

WESTERN SYSTEMS COORDINATING COUNCIL
2002 LSP3 OPERATING CASE
MAY 11, 2001
STAB, SLG FAULT ON PV 500 KV BUS; TWO PH-GND OUTS C CLR FLT W/PV-GND;
TC TRIP RCSO,ARLS,20K IMPACT, MOTORS1GS,SP21,SV3

COMMENTS DUE TO AREA COORDINATORS MAY 18, 2001
AREA COORDINATOR COMMENTS DUE TO STAFF MAY 25, 2001

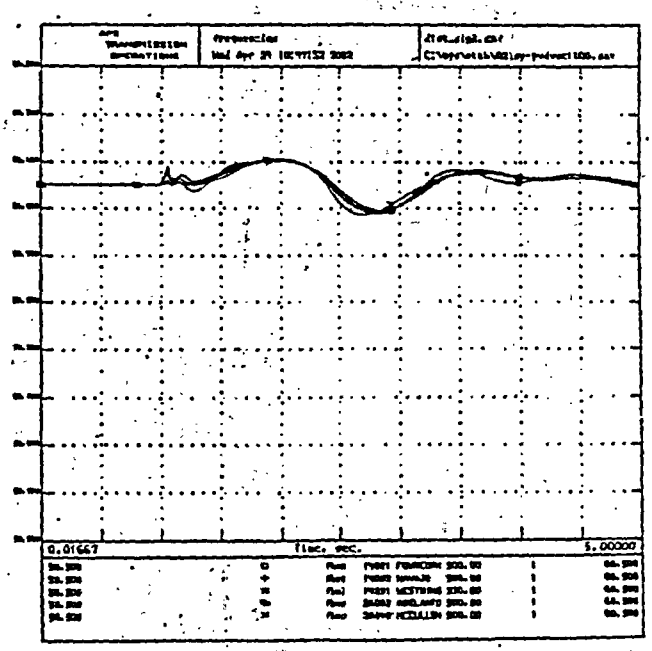

WESTERN SYSTEMS COORDINATING COUNCIL
2002 LSP3 OPERATING CASE
MAY 11, 2001
STAB, SLG FAULT ON PV 500 KV BUS; TWO PH-GND OUTS C CLR FLT W/PV-GND;
TC TRIP RCSO,ARLS,20K IMPACT, MOTORS1GS,SP21,SV3

COMMENTS DUE TO AREA COORDINATORS MAY 18, 2001
AREA COORDINATOR COMMENTS DUE TO STAFF MAY 25, 2001

Arizona 500 & 345kV EHV System

AZ500u3_h2010.drw

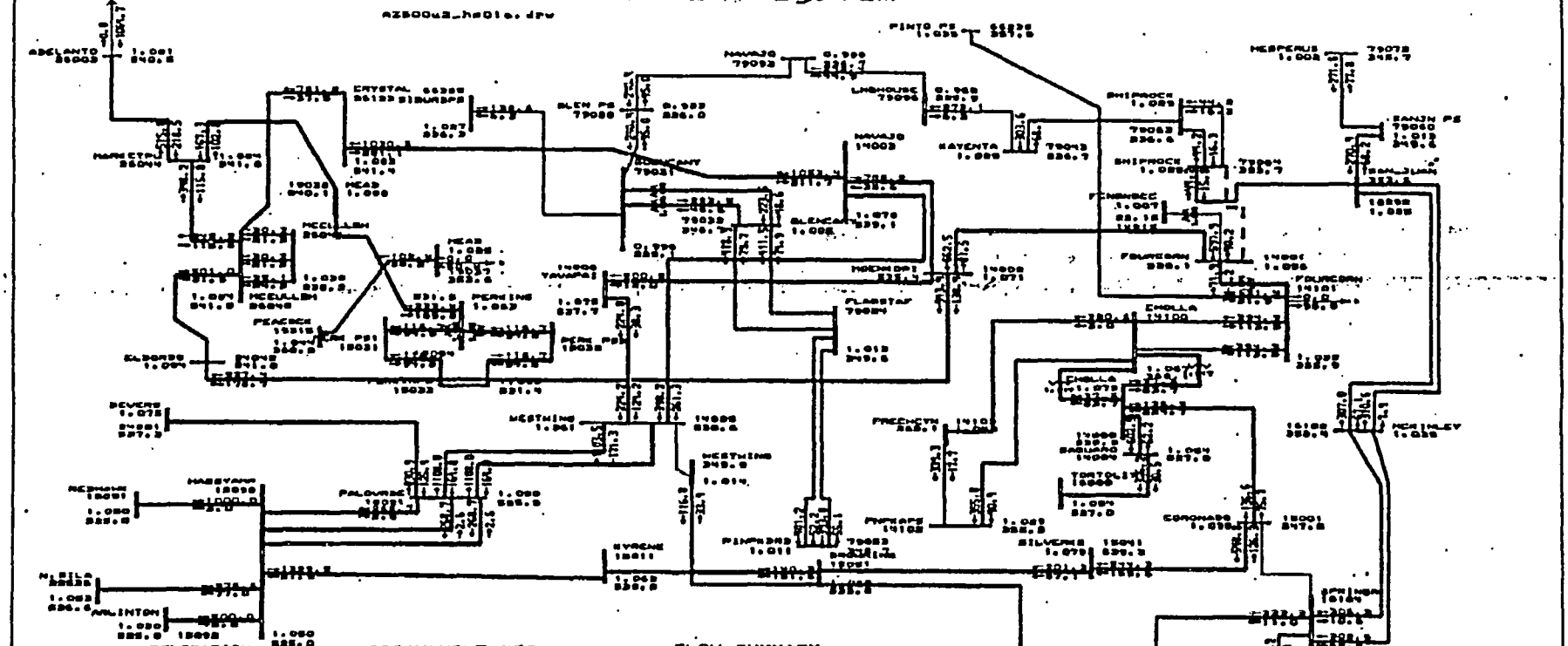

GENERATION	
CORONADO	400.00
CHOLLA	930.00
EMA HYDRO	0.00
FOURCORN	1740.00
HOOVER	844.74
MOHAVE	700.00
NAVAJO	2415.00
PALOVERDE	4050.00
SAN JUAN	1101.14
SPRINGERV	270.00
GRIFITH	100.00
SOPOINT	100.00
MERCHANT	465.00
DSB GEN	0.00
ARL GEN	520.10
REDHAWK	1040.00

230kV VOLTAGES	
KYRENE	1.03
PNPKAPS	1.05
WESTWING	1.06
SILVERKG	1.05
MEAD	1.05
SAG(115)	1.05
DEVERS	1.03
LUGO	1.00

FLOW SUMMARY	
EOR	3346.90
WOR (TOTAL)	4709.08
WOR (NORTH)	2964.52
MIDWAY-VINCENT	2111.98
KRAMER-LUGO	226.42
SOCAL IMPORT	10522.85
PDCI	1857.21
COI	2708.64
PCN WEST	1459.54
NC/SC	839.46
SIGURD/RED BUTTE	236.24

PALO VERDE TOTAL 5353.00
PALO VERDE WEST 1807.51
PALO VERDE EAST 3545.49

General Electric International, Inc. PSLF Program MH/MWR Tue Apr 23 15:23:00 2002

53

APS TRANSMISSION, OPERATIONS	WESTERN SYSTEMS COORDINATING COUNCIL 2002 LSP2 OPERATING CASE MAY 11, 2001	PV-DV SC 105(AZ SIDE) NEW GEN=1500MW F-02LSP-PVDVISC1500.SAV	c:\ops\stab\az500_hassyamp.dr c:\ops\stab\02lsp-pvdvisc1500. Rating = 1

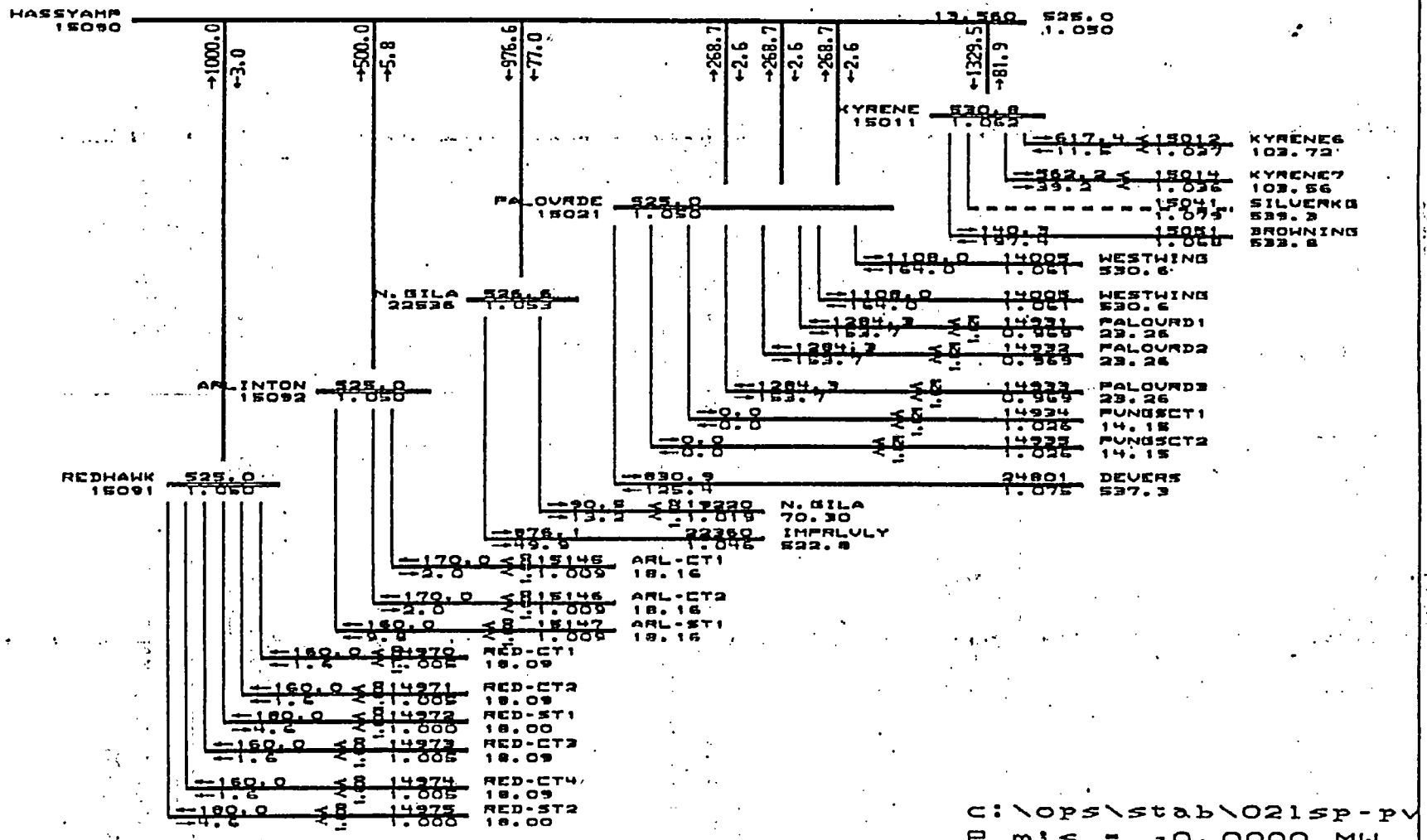

c:\ops\stab\021sp-pv

P mis = -0.0000 MW

Q mis = 0.0000 MVAR

General Electric International, Inc. PSLF Program

APS TRANSMISSION, OPERATIONS

WESTERN SYSTEMS COORDINATING COUNCIL
2002 LSP2 OPERATING CASE
MAY 11, 2001

PV-DV SC 105(AZ SIDE)
NEW GEN=1500MW

Tue Apr 22 16:23:11 2002
c:\ops\stab\az500_hassyamp.dr
c:\ops\stab\021sp-pv/vlsc1500.
Rating = 1

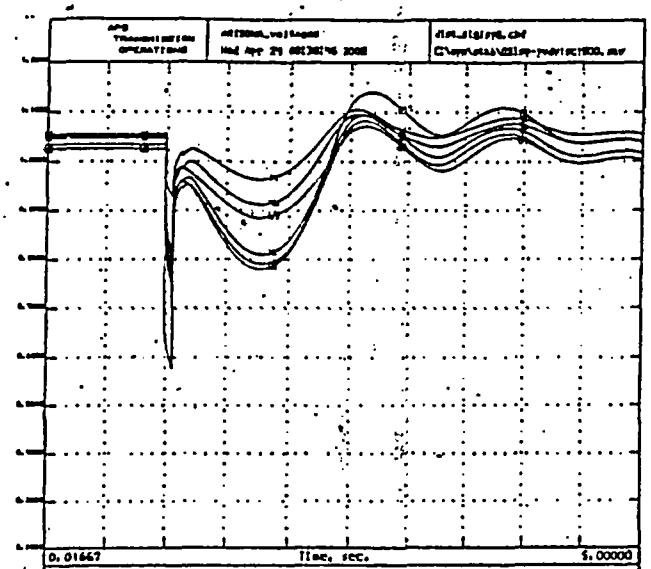

WESTERN SYSTEMS COORDINATING COUNCIL
2008 LSPG OPERATING CASE
MAY 11, 2001
STAB, SLG FAULT ON PV 500 KV BUS;TWO PV-MAG OUT;1 C CLR FLT
TC TRIP RCDG,ARLS,20E INDIRECT, MOTORS;02LP21.BYS

COMMENTS DUE TO AREA COORDINATORS MAY 18, 2001
AREA COORDINATOR COMMENTS DUE TO STAFF MAY 25, 2001

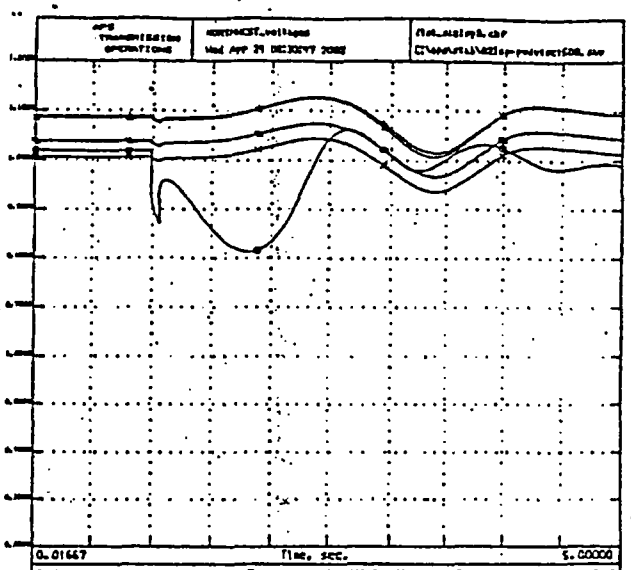

WESTERN SYSTEMS COORDINATING COUNCIL
2008 LSPG OPERATING CASE
MAY 11, 2001
STAB, SLG FAULT ON PV 500 KV BUS;TWO PV-MAG OUT;1 C CLR FLT
TC TRIP RCDG,ARLS,20E INDIRECT, MOTORS;02LP21.BYS

COMMENTS DUE TO AREA COORDINATORS MAY 18, 2001
AREA COORDINATOR COMMENTS DUE TO STAFF MAY 25, 2001

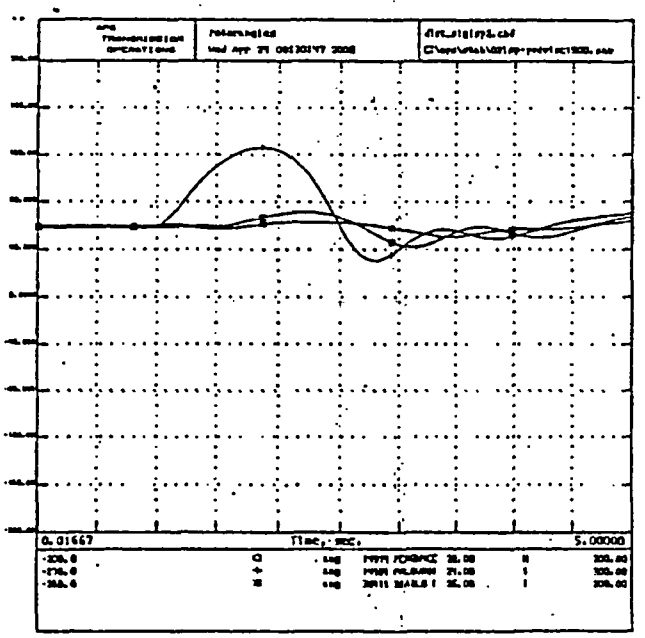

WESTERN SYSTEMS COORDINATING COUNCIL
2008 LSPG OPERATING CASE
MAY 11, 2001
STAB, SLG FAULT ON PV 500 KV BUS;TWO PV-MAG OUT;1 C CLR FLT
TC TRIP RCDG,ARLS,20E INDIRECT, MOTORS;02LP21.BYS

COMMENTS DUE TO AREA COORDINATORS MAY 18, 2001
AREA COORDINATOR COMMENTS DUE TO STAFF MAY 25, 2001

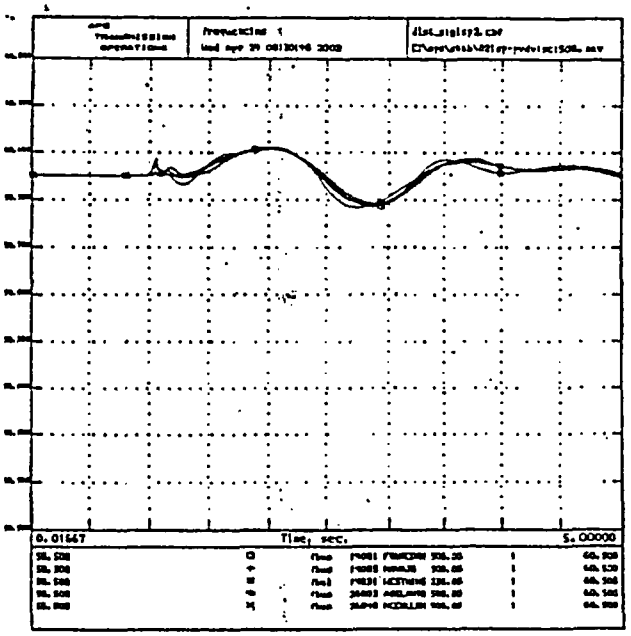

WESTERN SYSTEMS COORDINATING COUNCIL
2008 LSPG OPERATING CASE
MAY 11, 2001
STAB, SLG FAULT ON PV 500 KV BUS;TWO PV-MAG OUT;1 C CLR FLT
TC TRIP RCDG,ARLS,20E INDIRECT, MOTORS;02LP21.BYS

COMMENTS DUE TO AREA COORDINATORS MAY 18, 2001
AREA COORDINATOR COMMENTS DUE TO STAFF MAY 25, 2001

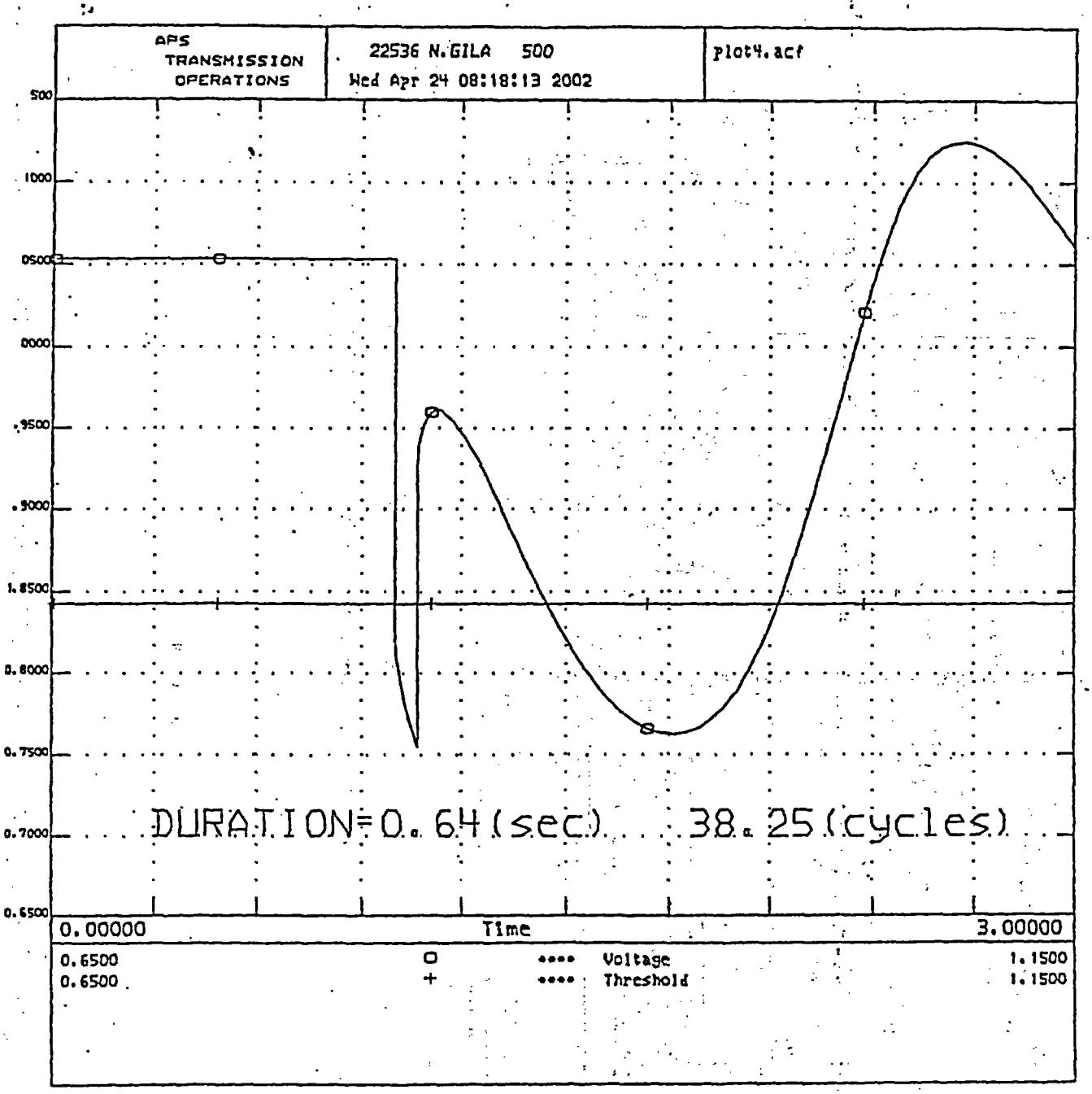

WESTERN SYSTEMS COORDINATING COUNCIL
2002 LSP2 OPERATING CASE
MAY 11, 2001
STAB, SLG FAULT ON PV 500 KV BUS;TWO PV-WWG OUT;4 C CLR FLT W/PV-WWG;
7c TRIP REDO,ARLO,20% INDUCT. MOTORS;02LSP21.DYD

COMMENTS DUE TO AREA COORDINATORS MAY 18, 2001
AREA COORDINATOR COMMENTS DUE TO STAFF MAY 25, 2001

Arizona 500 & 345kV EHV System

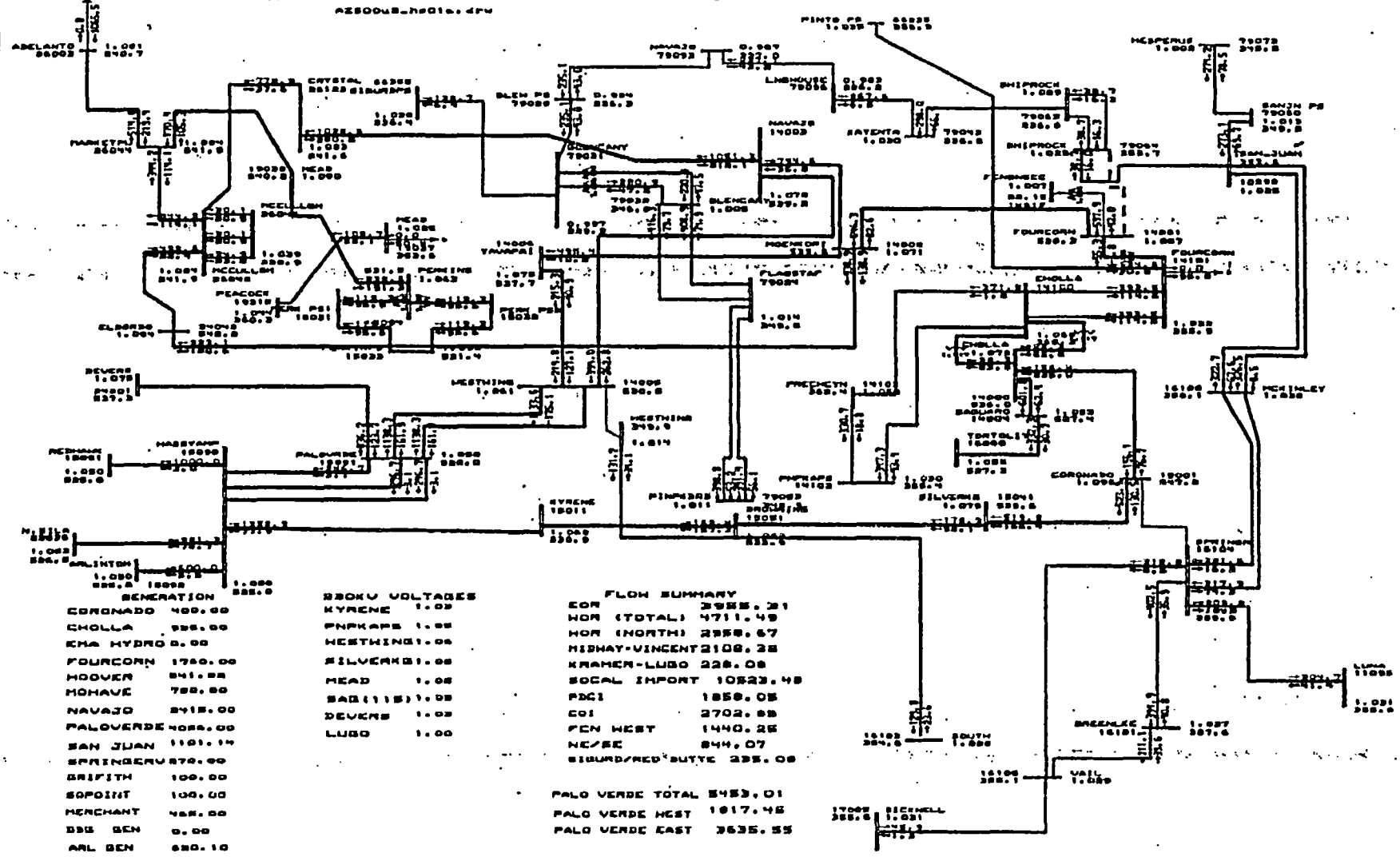

GENERATION	
CORONADO	400.00
CHOLLA	995.00
EHA HYDRO	0.00
FOURCORN	1760.00
HOOVER	841.00
MOHAVE	700.00
NAVAJO	2415.00
PALOVERDE	4055.00
SAN JUAN	1101.14
SPRINGERV	570.00
GRIFITH	100.00
SOPOINT	100.00
MERCHANT	465.00
DSG GEN	0.00
ARL GEN	630.10
REDHAWK	1040.00

230KV VOLTAGES	
KYRENE	1.03
PNPKAPS	1.05
WESTWING	1.05
SILVERKG	1.05
MEAD	1.05
SAB(115)	1.05
DEVERS	1.03
LUGO	1.00

FLOW SUMMARY	
EOR	3955.21
WOR (TOTAL)	4711.49
WOR (NORTH)	2958.67
MIDWAY-VINCENT	2108.28
KRAMER-LUGO	228.08
SOCAL IMPORT	10523.48
PDCI	1858.05
COI	2702.83
PCN WEST	1440.26
NC/SC	844.07
SIGURD/RED BUTTE	235.08

PALO VERDE TOTAL	5453.01
PALO VERDE WEST	1817.46
PALO VERDE EAST	3635.55

General Electric International, Inc. PSLF Program PM/MWR Tue Apr 23 15:46:57 2002

57 APS TRANSMISSION OPERATIONS	WESTERN SYSTEMS COORDINATING COUNCIL 2002 LSP2 OPERATING CASE MAY 11, 2001	PV-JV SC 105(AZ SIDE) FI-02LSP-PVDVISC.SAV	c:\ops\stab\az500_hassyamp.dr c:\ops\stab\02lsp-pvdvisc.sav Rating = 1

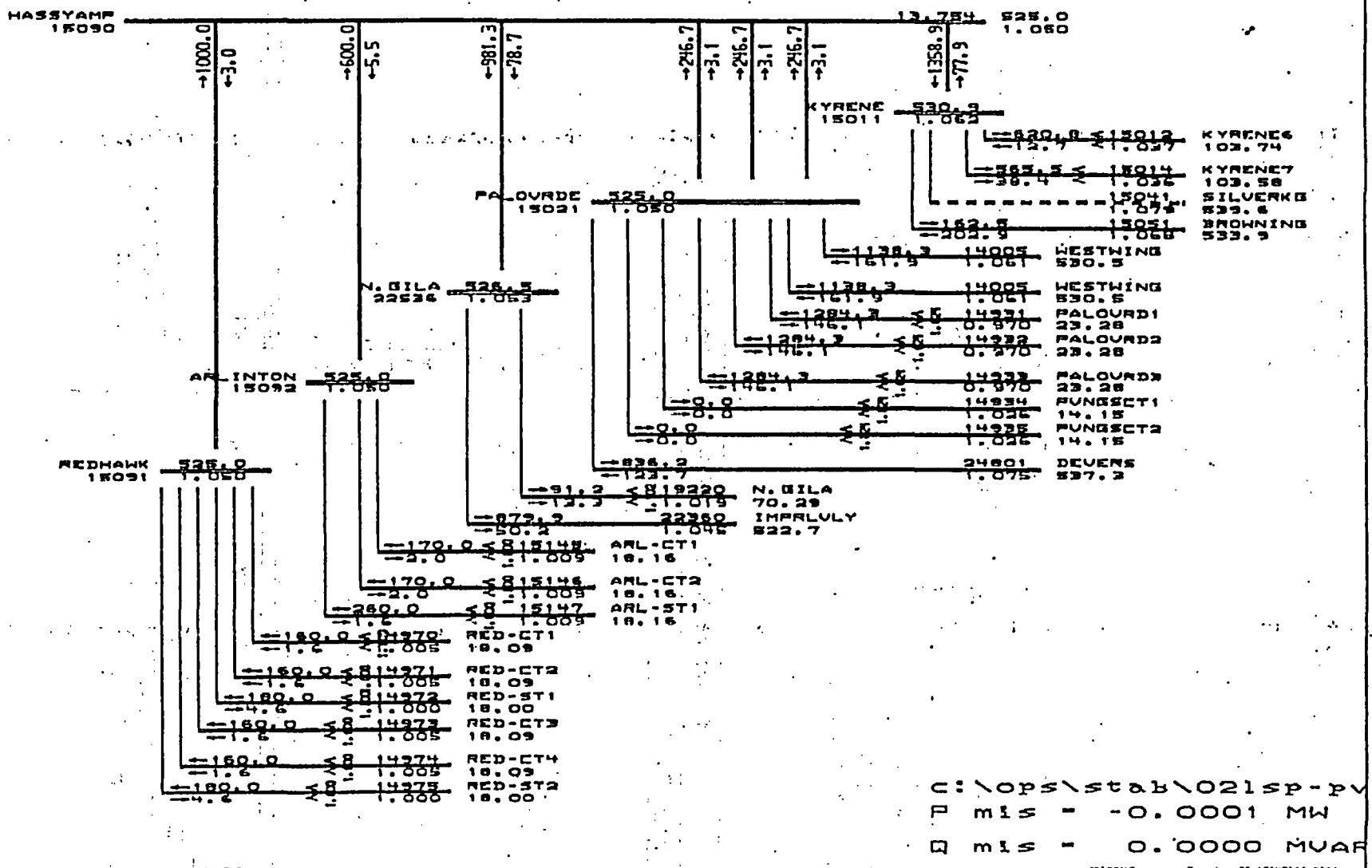

General Electric International, Inc. PSLF Program MW/MVAR Tue Apr 23 15:47:11 2002

5 APS TRANSMISSION, OPERATIONS	WESTERN SYSTEMS COORDINATING COUNCIL 2002 LSP2 OPERATING CASE MAY 11, 2001	PV-DV SC IOS(AZ SIDE)	c:\ops\stab\\rz500_hassyampa.dr c:\ops\stab\\021sp-pv/visc.sav Rating = 1

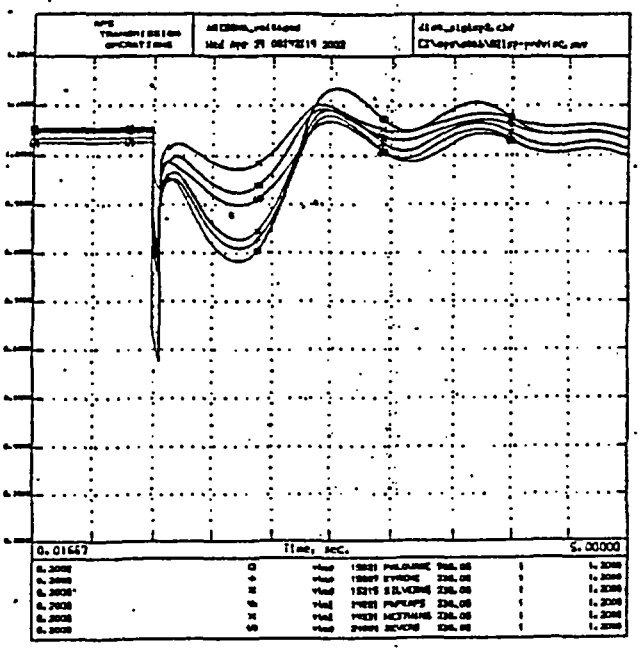

WESTERN SYSTEMS COORDINATING COUNCIL
2002 LSPG OPERATING CASE
MAY 11, 2001
STAB, SLG FAULT ON PV 500 KV BUS(TWO PV-MAS OUT)4 C CLR FLT W/PV-MAS
TC TRIP RC3320,ARL8,30% INDUCT. MOTORS(G3LSP91.DYD

COMMENTS DUE TO AREA COORDINATORS MAY 18, 2001
AREA COORDINATOR COMMENTS DUE TO STAFF MAY 25, 2001

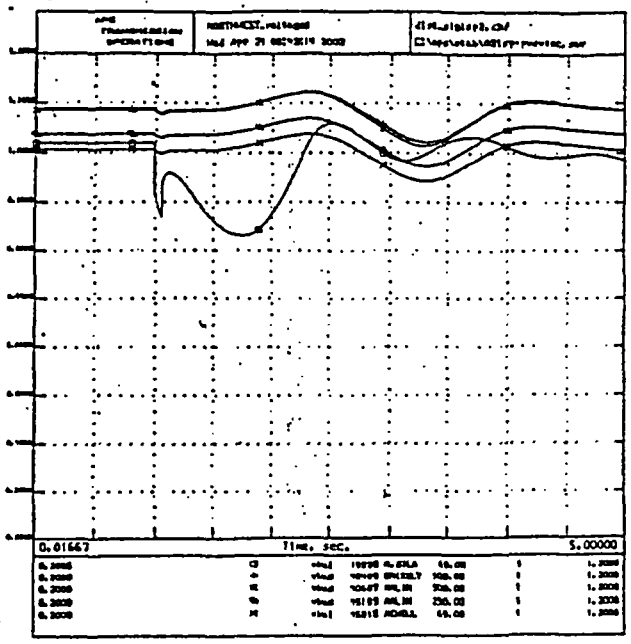

WESTERN SYSTEMS COORDINATING COUNCIL
2002 LSPG OPERATING CASE
MAY 11, 2001
STAB, SLG FAULT ON PV 500 KV BUS(TWO PV-MAS OUT)4 C CLR FLT W/PV-MAS
TC TRIP RC3320,ARL8,30% INDUCT. MOTORS(G3LSP91.DYD

COMMENTS DUE TO AREA COORDINATORS MAY 18, 2001
AREA COORDINATOR COMMENTS DUE TO STAFF MAY 25, 2001

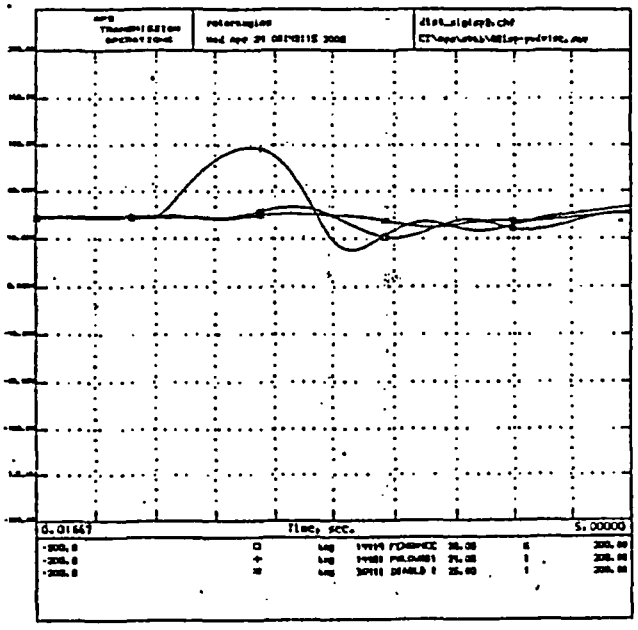

WESTERN SYSTEMS COORDINATING COUNCIL
2002 LSPG OPERATING CASE
MAY 11, 2001
STAB, SLG FAULT ON PV 500 KV BUS(TWO PV-MAS OUT)4 C CLR FLT W/PV-MAS
TC TRIP RC3320,ARL8,30% INDUCT. MOTORS(G3LSP91.DYD

COMMENTS DUE TO AREA COORDINATORS MAY 18, 2001
AREA COORDINATOR COMMENTS DUE TO STAFF MAY 25, 2001

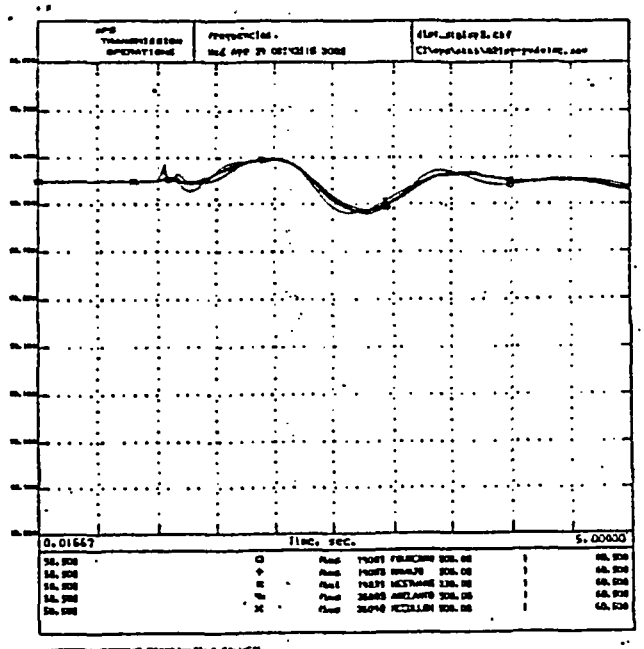

WESTERN SYSTEMS COORDINATING COUNCIL
2002 LSPG OPERATING CASE
MAY 11, 2001
STAB, SLG FAULT ON PV 500 KV BUS(TWO PV-MAS OUT)4 C CLR FLT W/PV-MAS
TC TRIP RC3320,ARL8,30% INDUCT. MOTORS(G3LSP91.DYD

COMMENTS DUE TO AREA COORDINATORS MAY 18, 2001
AREA COORDINATOR COMMENTS DUE TO STAFF MAY 25, 2001

Arizona 500 & 345kV EHV System

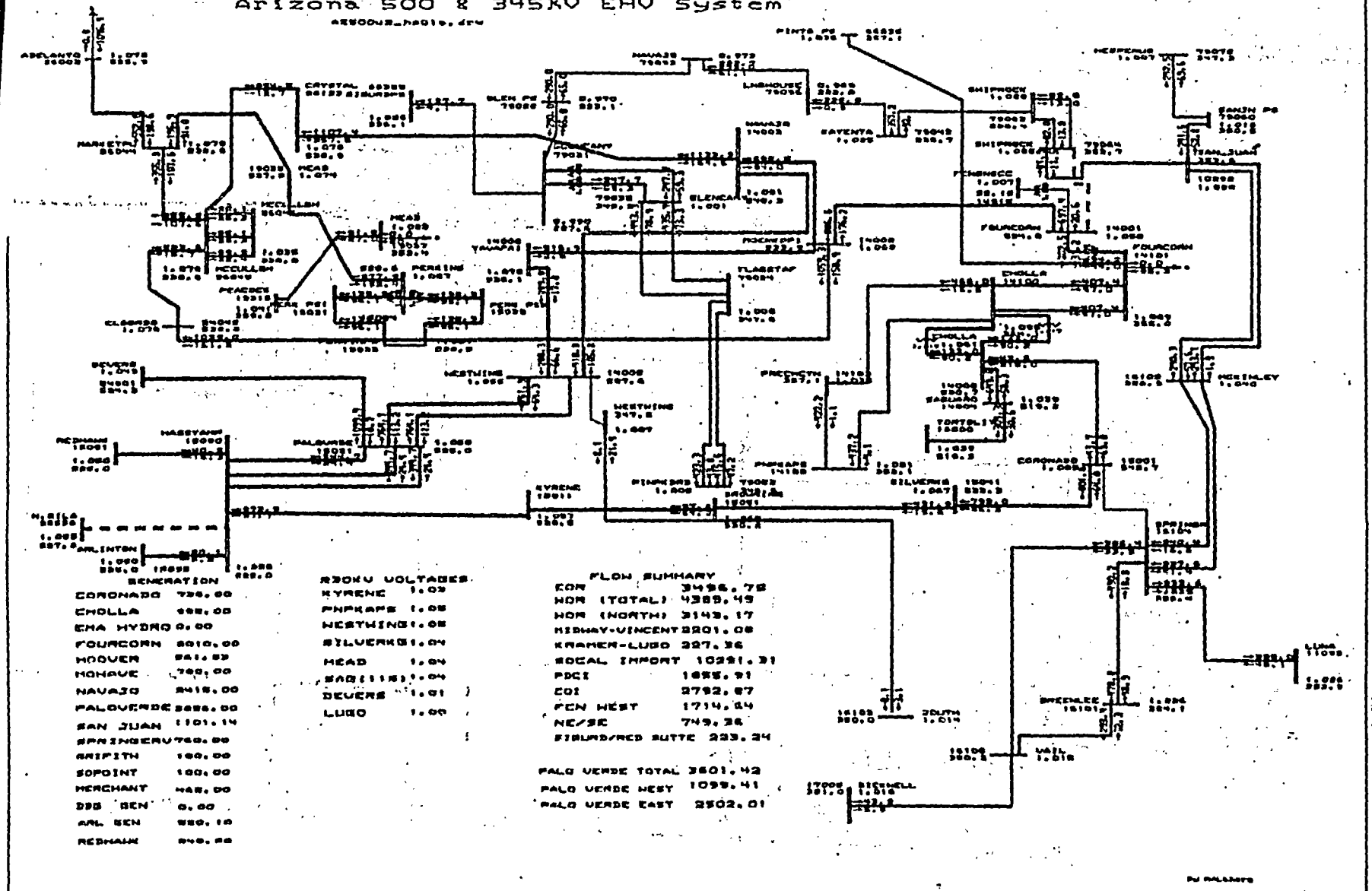

General Electric International, Inc. PSLF Program

APS TRANSMISSION OPERATIONS

WESTERN SYSTEMS COORDINATING COUNCIL
2002 LSP2 OPERATING CASE
MAY 11, 2001

HASS-N.GILA 105
PV GEN=3601MW

G-02LSP-HANG3601.SAV

Fri Apr 26 11:03:25 2002
c:\ops\stb\az500_hassyamp.dr
02lsp-hang3601.sav
Rating = 1

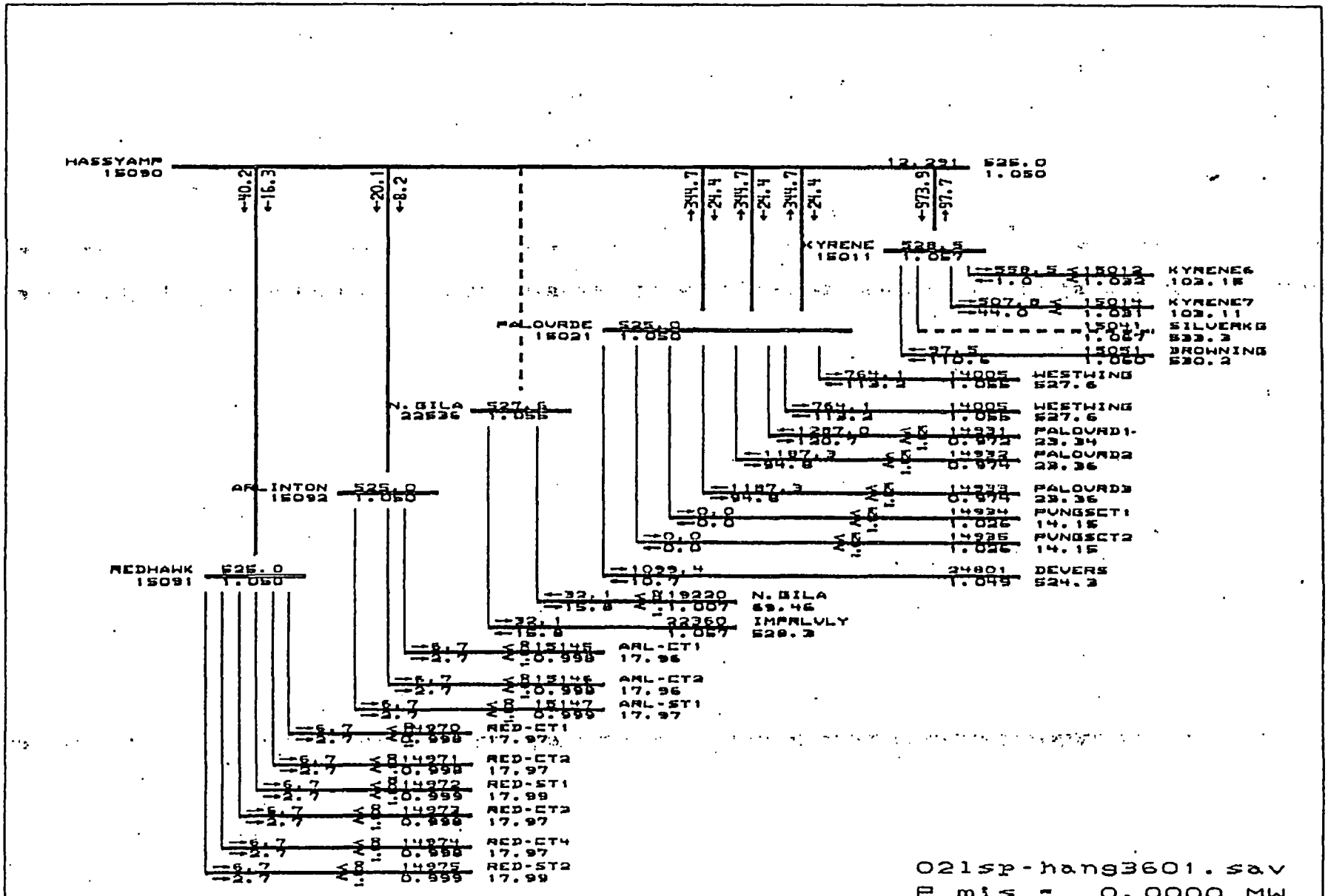

General Electric International, Inc. PSLF Program

APS TRANSMISSION OPERATIONS	WESTERN SYSTEMS COORDINATING CONCIL 2002 LSP2 OPERATING CASE MAY 11, 2001	HASS-N.GILA 105 PV ECN-3601MW	c:\ops\stab\sz500_hassyampl.dr 021sp-hang3601.sav Rating = 1

Fri Apr 26 11:02:12 2002

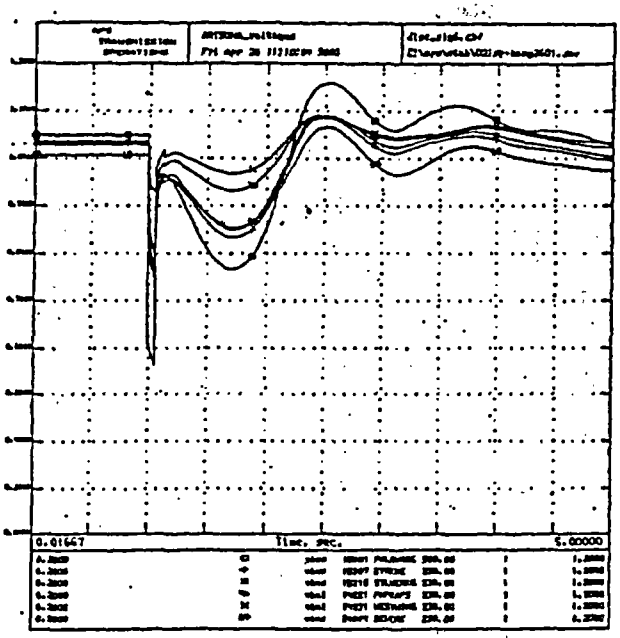

WESTERN SYSTEMS COORDINATING COUNCIL
2002 LSPS OPERATING CASE
MAY 11, 2001
STAB, SLG FAULT ON PV 500 KV BUS(TWO PV-MAD OUT)9 C CLR FLT
% TRIP RCOL,ARLS,300 DIRECT, MOTORS:CGL3P21.SYS

COMMENTS DUE TO AREA COORDINATORS MAY 18, 2001
AREA COORDINATOR COMMENTS DUE TO STAFF MAY 25, 2001

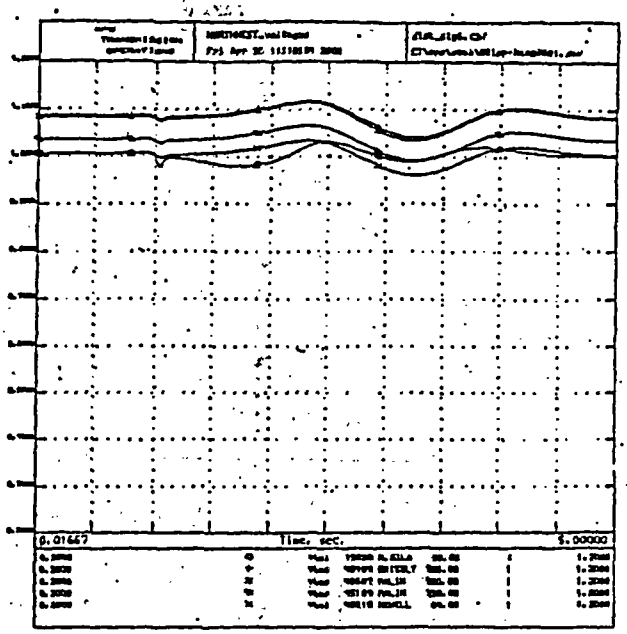

WESTERN SYSTEMS COORDINATING COUNCIL
2002 LSPS OPERATING CASE
MAY 11, 2001
STAB, SLG FAULT ON PV 500 KV BUS(TWO PV-MAD OUT)9 C CLR FLT
% TRIP RCOL,ARLS,300 DIRECT, MOTORS:CGL3P21.SYS

COMMENTS DUE TO AREA COORDINATORS MAY 18, 2001
AREA COORDINATOR COMMENTS DUE TO STAFF MAY 25, 2001

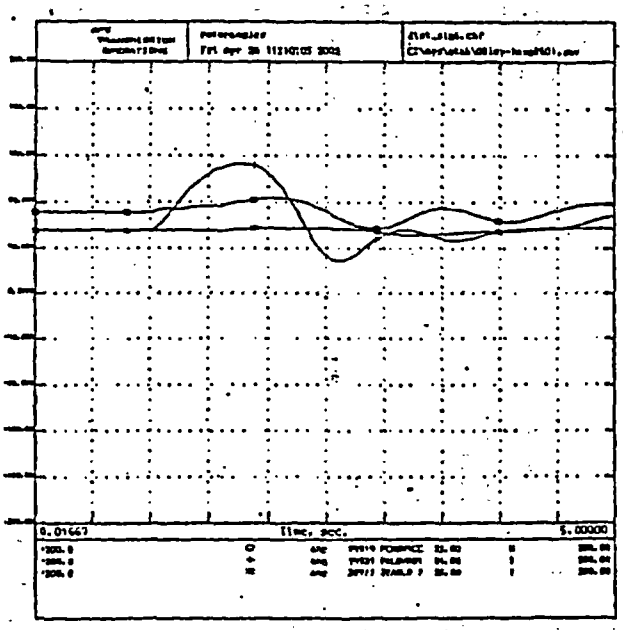

WESTERN SYSTEMS COORDINATING COUNCIL
2002 LSPS OPERATING CASE
MAY 11, 2001
STAB, SLG FAULT ON PV 500 KV BUS(TWO PV-MAD OUT)9 C CLR FLT
% TRIP RCOL,ARLS,300 DIRECT, MOTORS:CGL3P21.SYS

COMMENTS DUE TO AREA COORDINATORS MAY 18, 2001
AREA COORDINATOR COMMENTS DUE TO STAFF MAY 25, 2001

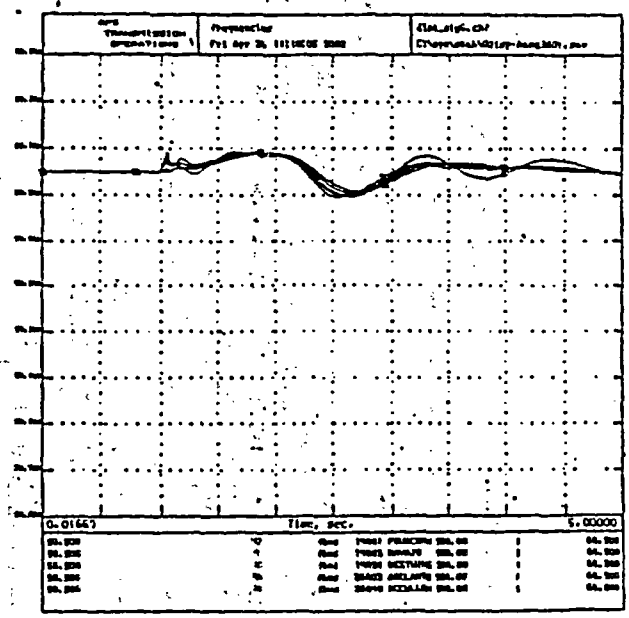

WESTERN SYSTEMS COORDINATING COUNCIL
2002 LSPS OPERATING CASE
MAY 11, 2001
STAB, SLG FAULT ON PV 500 KV BUS(TWO PV-MAD OUT)9 C CLR FLT
% TRIP RCOL,ARLS,300 DIRECT, MOTORS:CGL3P21.SYS

COMMENTS DUE TO AREA COORDINATORS MAY 18, 2001
AREA COORDINATOR COMMENTS DUE TO STAFF MAY 25, 2001

Arizona 500 & 345kV EHV System

AZ500US_hs01a.drw

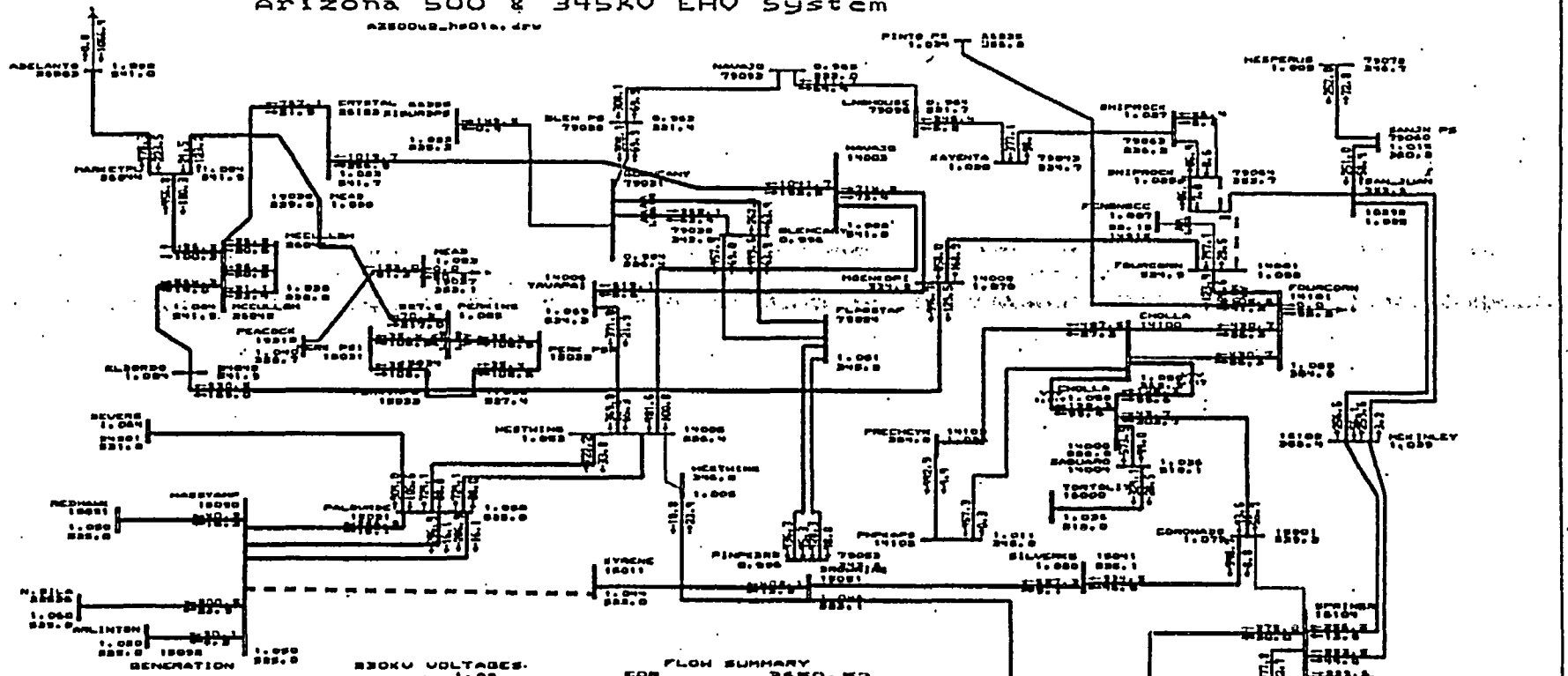

GENERATION

CORONADO	795.00
CHOLLA	995.00
EMA HYDRO	0.00
FOURCORN	2000.00
HOOVER	880.17
MOHAVE	700.00
NAVAJO	2415.00
PALOVERDE	3400.00
SAN JUAN	1101.14
SPRINGERV	700.00
GRIFITH	100.00
SOPOINT	100.00
MERCHANT	465.00
DSG GEN	0.00
ARL GEN	880.10
REDHAWK	840.00

230KV VOLTAGES

KYRENE	1.02
PNPKAPS	1.04
WESTWING	1.04
SILVERKG	1.02
MEAD	1.06
SAG(115)	1.03
DEVERS	1.08
LUGO	1.00

FLOW SUMMARY

EOR	3650.52
WOR (TOTAL)	4415.53
WOR (NORTH)	2765.06
MIDWAY-VINCENT	2151.57
KRAMER-LUGO	225.83
SOCAL IMPORT	10268.51
PDCI	1858.11
COI	2745.64
FCN WEST	1731.85
NE/SE	799.79
SIGURD/RED BUTTE	236.10

PALO VERDE TOTAL	3152.72
PALO VERDE WEST	1704.52
PALO VERDE EAST	1448.20

General Electric International, Inc. PSLF Version

Wed Apr 24 11:23:47 2002

APS TRANSMISSION OPERATIONS	WESTERN SYSTEMS COORDINATING COUNCIL 2002 LSP2 OPERATING CASE MAY 11, 2001	HAS-EXP 105 PV/HASS GEN= 3152MW H - 02LSP-HAKYR 3152.SAV	c:\ops\stab\az500_hassyanpa.dr c:\ops\stab\02lsp-ha\yr3152.sa Rating = 1

63

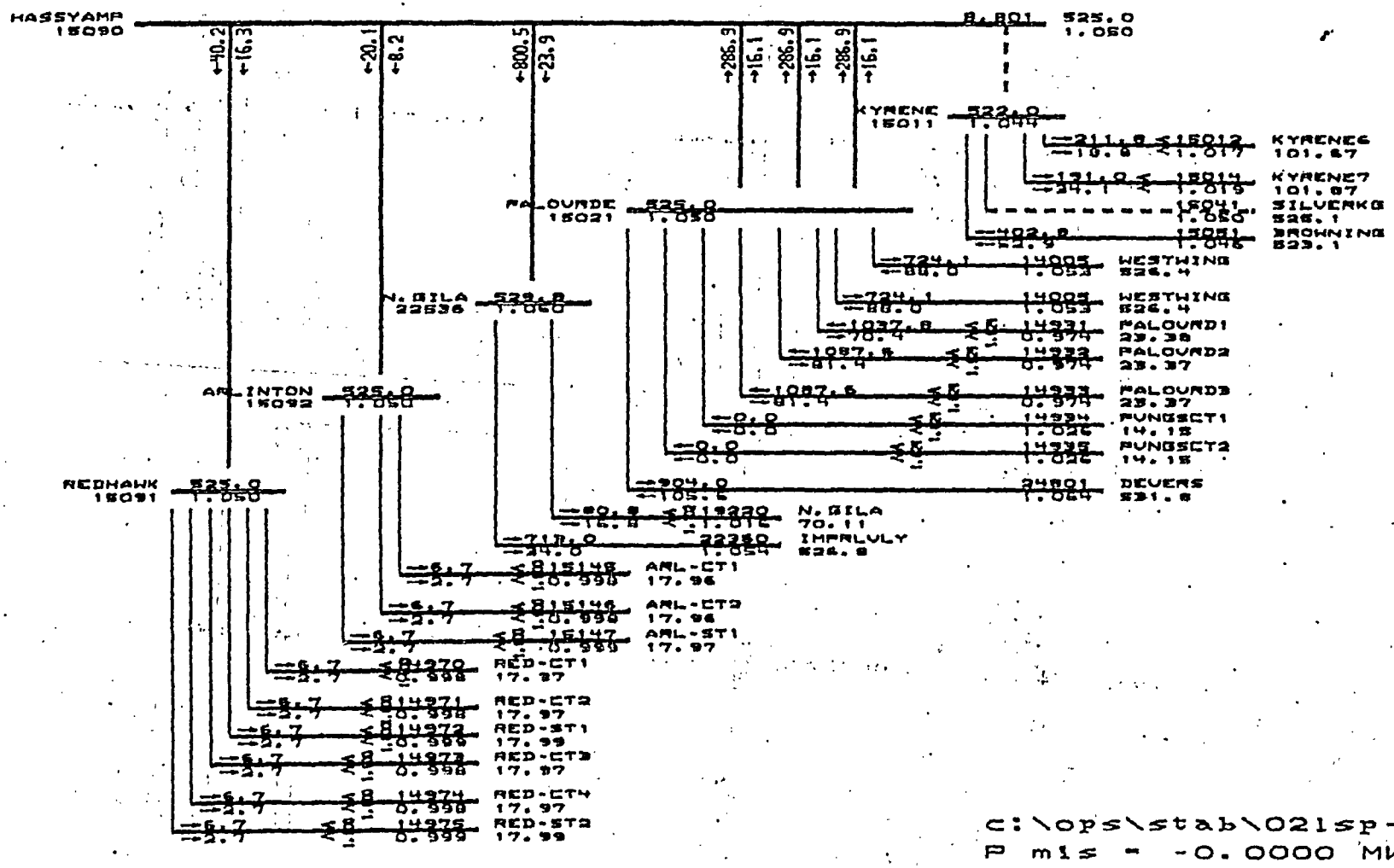
HASSYAMP 15090
8.801 525.0 1.050
KYRENE 15011 522.0 1.044
KYRENE6 101.87
KYRENE7 101.87
SILVERKG 526.1
BROWNING 523.1
PALOVRDE 15021 525.0 1.050
WESTWING 526.4
WESTWING 526.4
PALOVRD1 29.38
PALOVRD2 29.37
PALOVRD3 29.37
PVNGSCT1 14.15
PVNGSCT2 14.15
DEVERS 531.8
N.GILA 70.11
IMPRLVLY 526.8
N.GILA 22636 529.8 1.060
ARLINTON 15092 525.0 1.050
ARL-CT1 17.96
ARL-CT2 17.96
ARL-ST1 17.97
REDHAWK 15091 525.0 1.050
RED-CT1 17.97
RED-CT2 17.97
RED-ST1 17.99
RED-CT3 17.97
RED-CT4 17.97
RED-ST2 17.99
c:\ops\stab\021sp-ha
P mis = -0.0000 MW
Q mis = 0.0000 MVAR
General Electric International, Inc.
APS TRANSMISSION OPERATIONS
WESTERN SYSTEMS COORDINATING COUNCIL
2002 LSP2 OPERATING CASE
MAY 11, 2001
HAS-KYR 105
PV/HASS BTX- 3152PN
Rating = 1

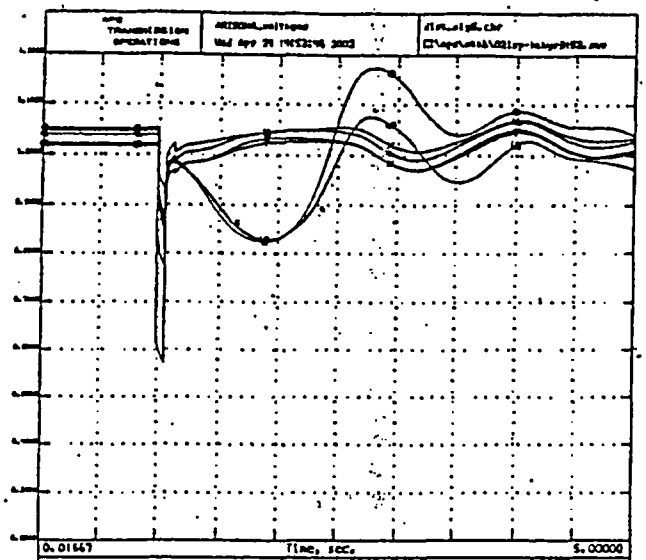

WESTERN SYSTEMS COORDINATING COUNCIL
2002 LSP2 OPERATING CASE
MAY 11, 2001
STAB, SLG FAULT ON PV 500 KV BUS;TRB PH-AG OUT;1 C CLR FLT
TC TRIP RCBO,ARLB,30K INDUCT. MOTORS;02LSP21.DYD

COMMENTS DUE TO AREA COORDINATORS MAY 18, 2001
AREA COORDINATOR COMMENTS DUE TO STAFF MAY 25, 2001

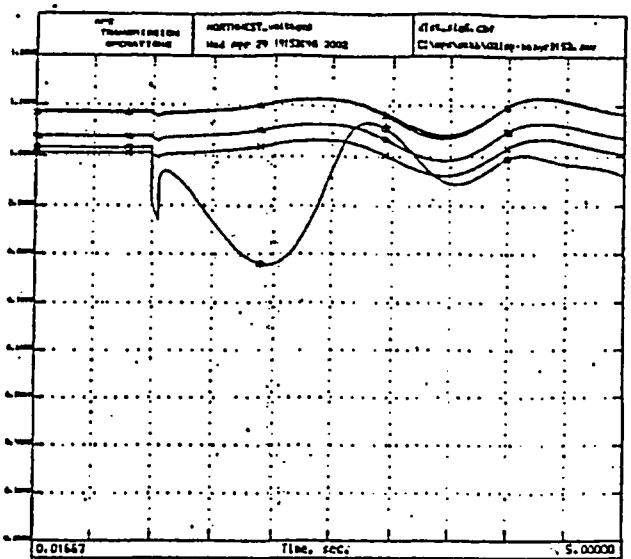

WESTERN SYSTEMS COORDINATING COUNCIL
2002 LSP2 OPERATING CASE
MAY 11, 2001
STAB, SLG FAULT ON PV 500 KV BUS;TRB PH-AG OUT;1 C CLR FLT
TC TRIP RCBO,ARLB,30K INDUCT. MOTORS;02LSP21.DYD

COMMENTS DUE TO AREA COORDINATORS MAY 18, 2001
AREA COORDINATOR COMMENTS DUE TO STAFF MAY 25, 2001

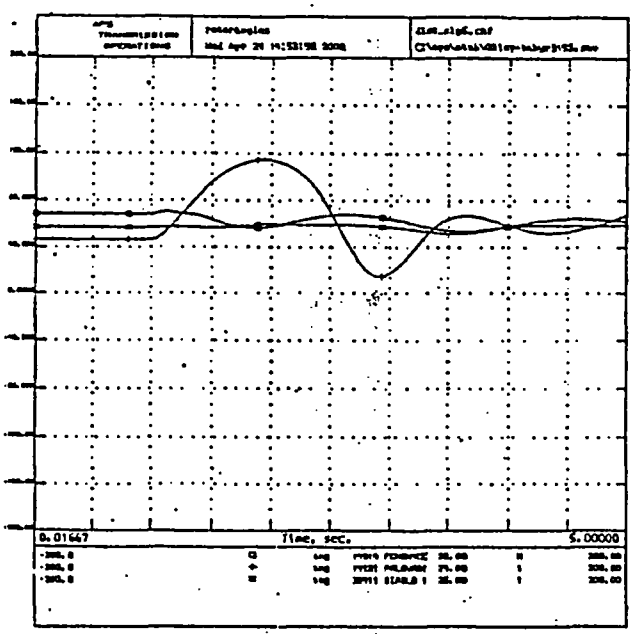

WESTERN SYSTEMS COORDINATING COUNCIL
2002 LSP2 OPERATING CASE
MAY 11, 2001
STAB, SLG FAULT ON PV 500 KV BUS;TRB PH-AG OUT;1 C CLR FLT
TC TRIP RCBO,ARLB,30K INDUCT. MOTORS;02LSP21.DYD

COMMENTS DUE TO AREA COORDINATORS MAY 18, 2001
AREA COORDINATOR COMMENTS DUE TO STAFF MAY 25, 2001

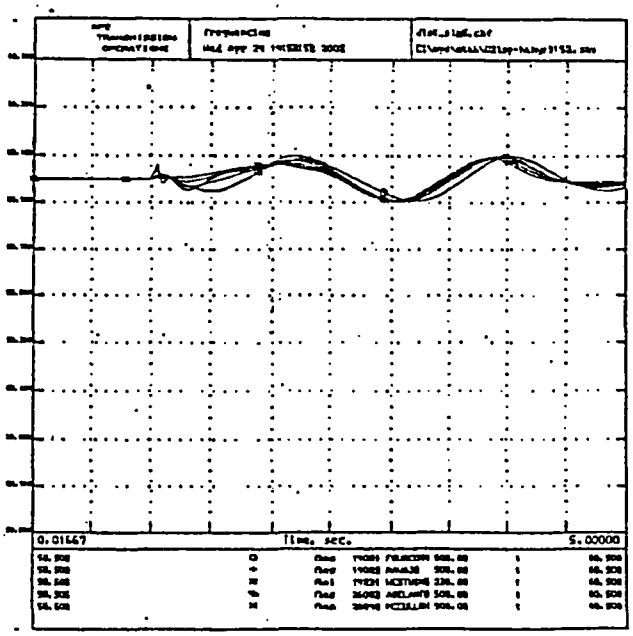

WESTERN SYSTEMS COORDINATING COUNCIL
2002 LSP2 OPERATING CASE
MAY 11, 2001
STAB, SLG FAULT ON PV 500 KV BUS;TRB PH-AG OUT;1 C CLR FLT
TC TRIP RCBO,ARLB,30K INDUCT. MOTORS;02LSP21.DYD

COMMENTS DUE TO AREA COORDINATORS MAY 18, 2001
AREA COORDINATOR COMMENTS DUE TO STAFF MAY 25, 2001

Arizona 500 & 345kV EHV System

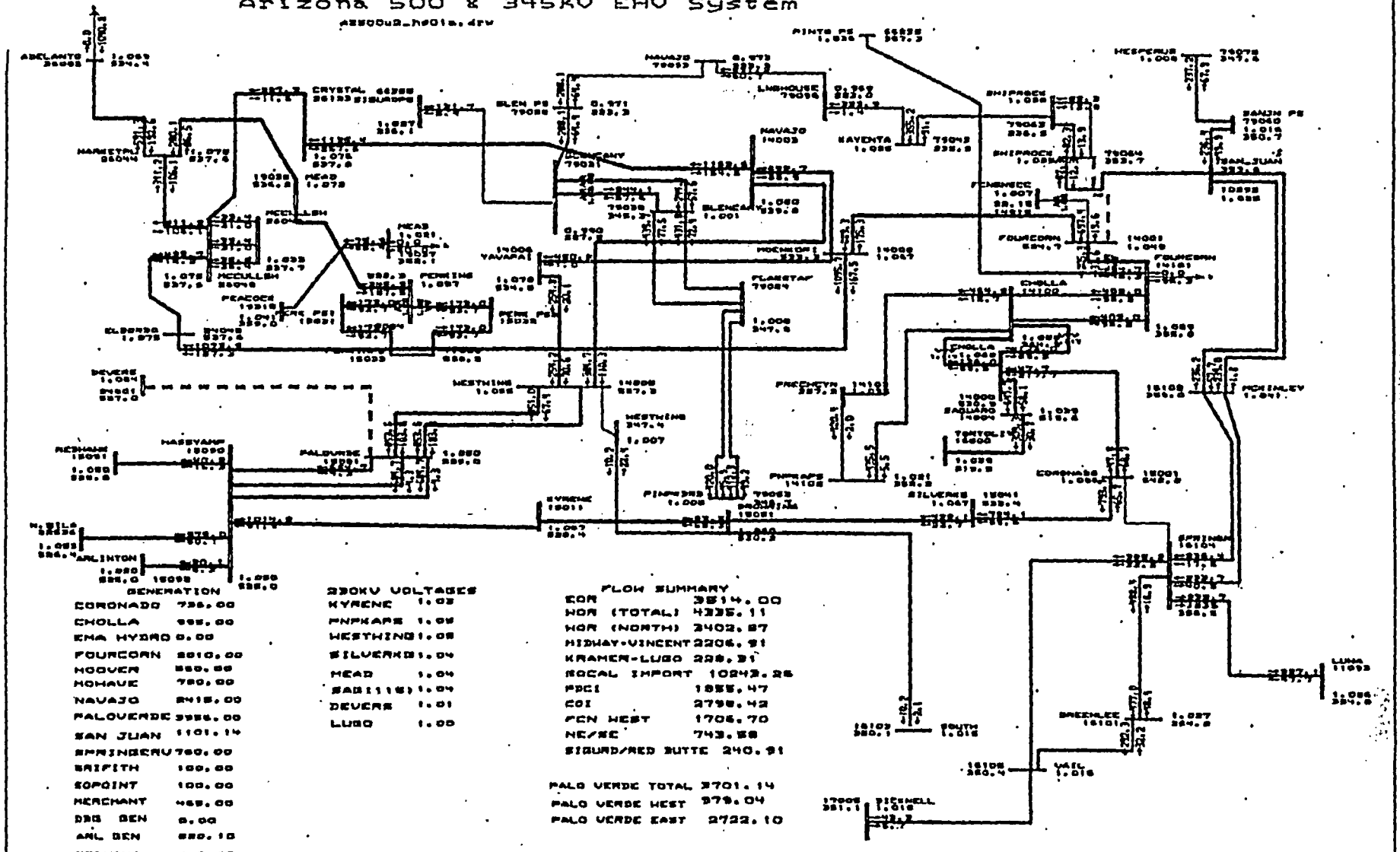

GENERATION	
CORONADO	736.00
CHOLLA	995.00
EMA HYDRO	0.00
FOURCORN	2010.00
HOOVER	550.00
MOHAVE	780.00
NAVAJO	2415.00
PALOVERDE	3956.00
SAN JUAN	1101.14
SPRINGERV	780.00
GRIFITH	100.00
SOPOINT	100.00
MERCHANT	465.00
DBS GEN	0.00
ARL GEN	550.10
REDHAWK	840.50

230KV VOLTAGES	
KYRENE	1.03
PNPKARS	1.05
WESTWING	1.05
SILVERKE	1.04
MEAD	1.04
SAB(115)	1.04
DEVERS	1.01
LUGO	1.00

FLOW SUMMARY	
EOR	3514.00
WOR (TOTAL)	4335.11
WOR (NORTH)	3402.87
MIDWAY-VINCENT	2206.91
KRAMER-LUGO	238.31
SOCAL IMPORT	10243.25
PDCI	1855.47
COI	2798.42
PCN WEST	1705.70
NE/SE	743.58
SIGURD/RED BUTTE	240.91

PALO VERDE TOTAL	3701.14
PALO VERDE WEST	979.04
PALO VERDE EAST	2722.10

General Electric International, Inc. PSLF Program

77 APS TRANSMISSION OPERATIONS	WESTERN SYSTEMS COORDINATING COUNCIL 2002 LSP2 OPERATING CASE MAY 11, 2001	PV-DEV IOS PV GEN=3701MW I-02LSP-PVDV 3701.SAV	c:\ops\stsl\az500_hassyampa.dr c:\ops\stsl\02lsp-pvdv3701.sav Rating = 1

Wed Apr 24 19:00:15 2002

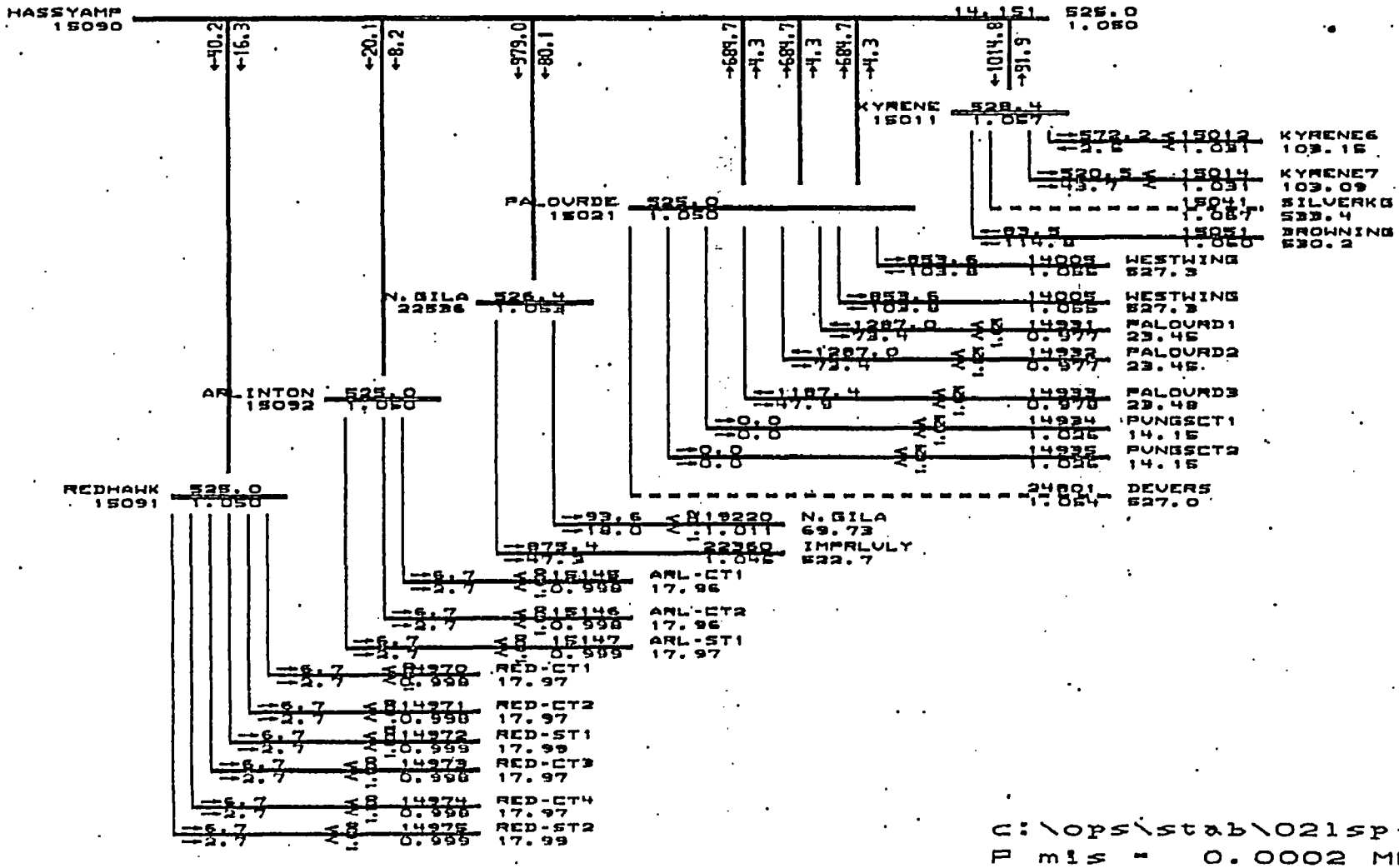
HASSYAMP 15090
14.151 525.0 1.050
KYRENE 15011 528.4 1.067
KYRENE6 103.15
KYRENE7 103.09
SILVERKG 539.4
BROWNING 530.2
PALOVRDE 15021 525.0 1.050
WESTWING 527.3
WESTWING 527.3
PALOVRD1 23.45
PALOVRD2 23.45
PALOVRD3 23.48
PVNGSCT1 14.15
PVNGSCT2 14.15
DEVERS 527.0
N.GILA 22526 526.4 1.052
N.GILA 69.73
IMPRLVLY 522.7
ARLINTON 15092 525.0 1.050
ARL-CT1 17.96
ARL-CT2 17.96
ARL-ST1 17.97
REDHAWK 15091 525.0 1.050
RED-CT1 17.97
RED-CT2 17.97
RED-ST1 17.99
RED-CT3 17.97
RED-CT4 17.97
RED-ST2 17.99
c:\ops\stab\021sp-pv
P mis = 0.0002 MW
Q mis = -0.0000 MVAR
General Electric International, Inc. PSLF Program
MW/MVAR
Wed Apr 24 13:52:57 2002
APS TRANSMISSION OPERATIONS
WESTERN SYSTEMS COORDINATING COUNCIL
2002 LSP2 OPERATING CASE
MAY 11, 2001
PV-DEV 105
PV GEN=3701MW
c:\ops\stab\az500_hassyampa.dr
c:\ops\stab\021sp-pv4v3701.sav
Rating = 1

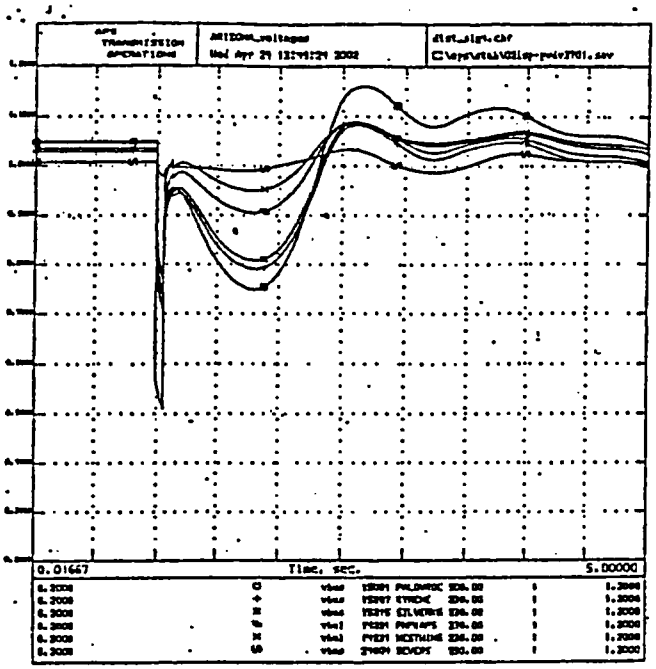

WESTERN SYSTEMS COORDINATING COUNCIL
2002 LSP2 OPERATING CASE
MAY 11, 2001
STAB, SLG FAULT ON PV 500 KV BUS(TWO PV-WAE OUT)4 C CLR FLT W/PV-WAE;
7C TRIP RCSO,ARLO,20% INDUCT. MOTORS(02LSP21.DYD

COMMENTS DUE TO AREA COORDINATORS MAY 18, 2001
AREA COORDINATOR COMMENTS DUE TO STAFF MAY 25, 2001

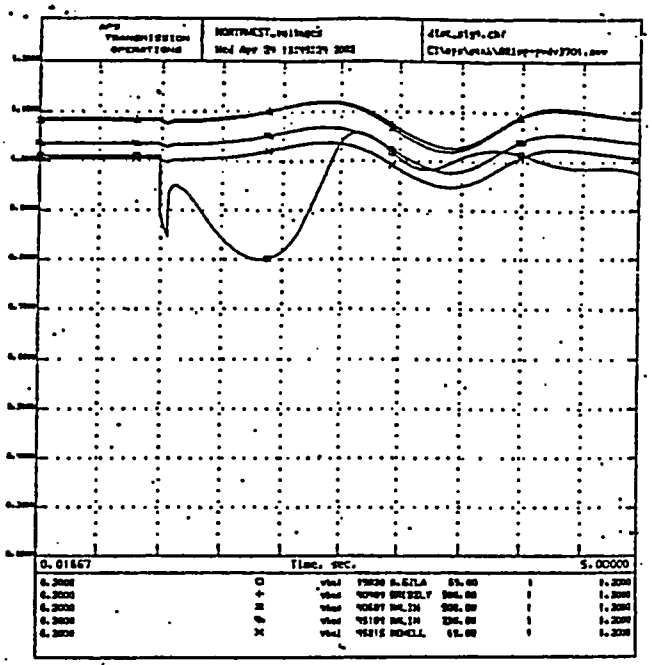

WESTERN SYSTEMS COORDINATING COUNCIL
2002 LSP2 OPERATING CASE
MAY 11, 2001
STAB, SLG FAULT ON PV 500 KV BUS(TWO PV-WAE OUT)4 C CLR FLT W/PV-WAE;
7C TRIP RCSO,ARLO,20% INDUCT. MOTORS(02LSP21.DYD

COMMENTS DUE TO AREA COORDINATORS MAY 18, 2001
AREA COORDINATOR COMMENTS DUE TO STAFF MAY 25, 2001

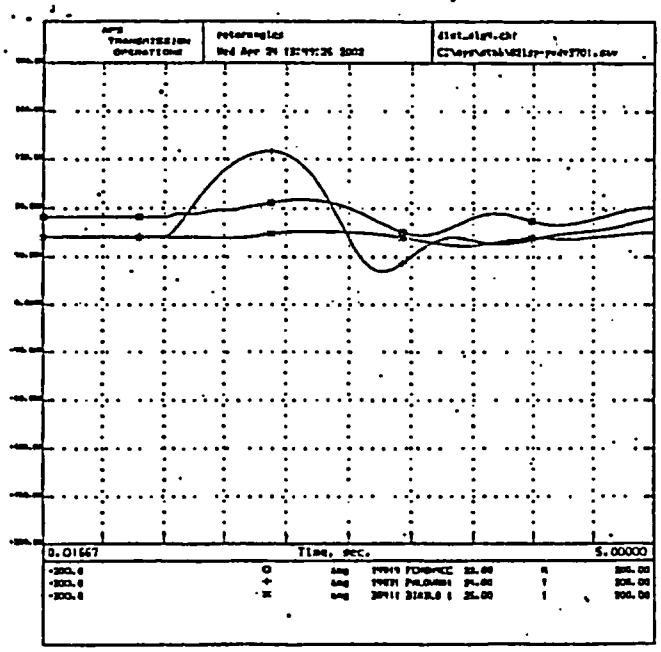

WESTERN SYSTEMS COORDINATING COUNCIL
2002 LSP2 OPERATING CASE
MAY 11, 2001
STAB, SLG FAULT ON PV 500 KV BUS(TWO PV-WAE OUT)4 C CLR FLT W/PV-WAE;
7C TRIP RCSO,ARLO,20% INDUCT. MOTORS(02LSP21.DYD

COMMENTS DUE TO AREA COORDINATORS MAY 18, 2001
AREA COORDINATOR COMMENTS DUE TO STAFF MAY 25, 2001

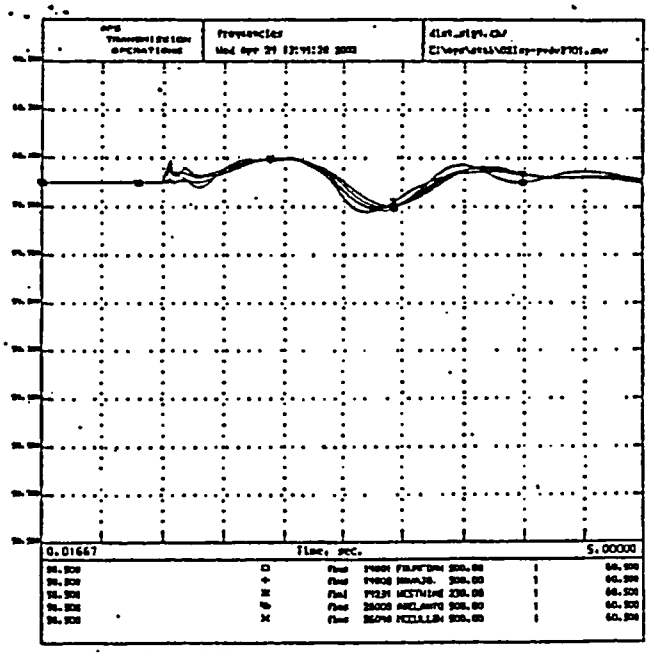

WESTERN SYSTEMS COORDINATING COUNCIL
2002 LSP2 OPERATING CASE
MAY 11, 2001
STAB, SLG FAULT ON PV 500 KV BUS(TWO PV-WAE OUT)4 C CLR FLT W/PV-WAE;
7C TRIP RCSO,ARLO,20% INDUCT. MOTORS(02LSP21.DYD

COMMENTS DUE TO AREA COORDINATORS MAY 18, 2001
AREA COORDINATOR COMMENTS DUE TO STAFF MAY 25, 2001

Arizona 500 & 345kV EHV System

AZ500US_hs01a.drw

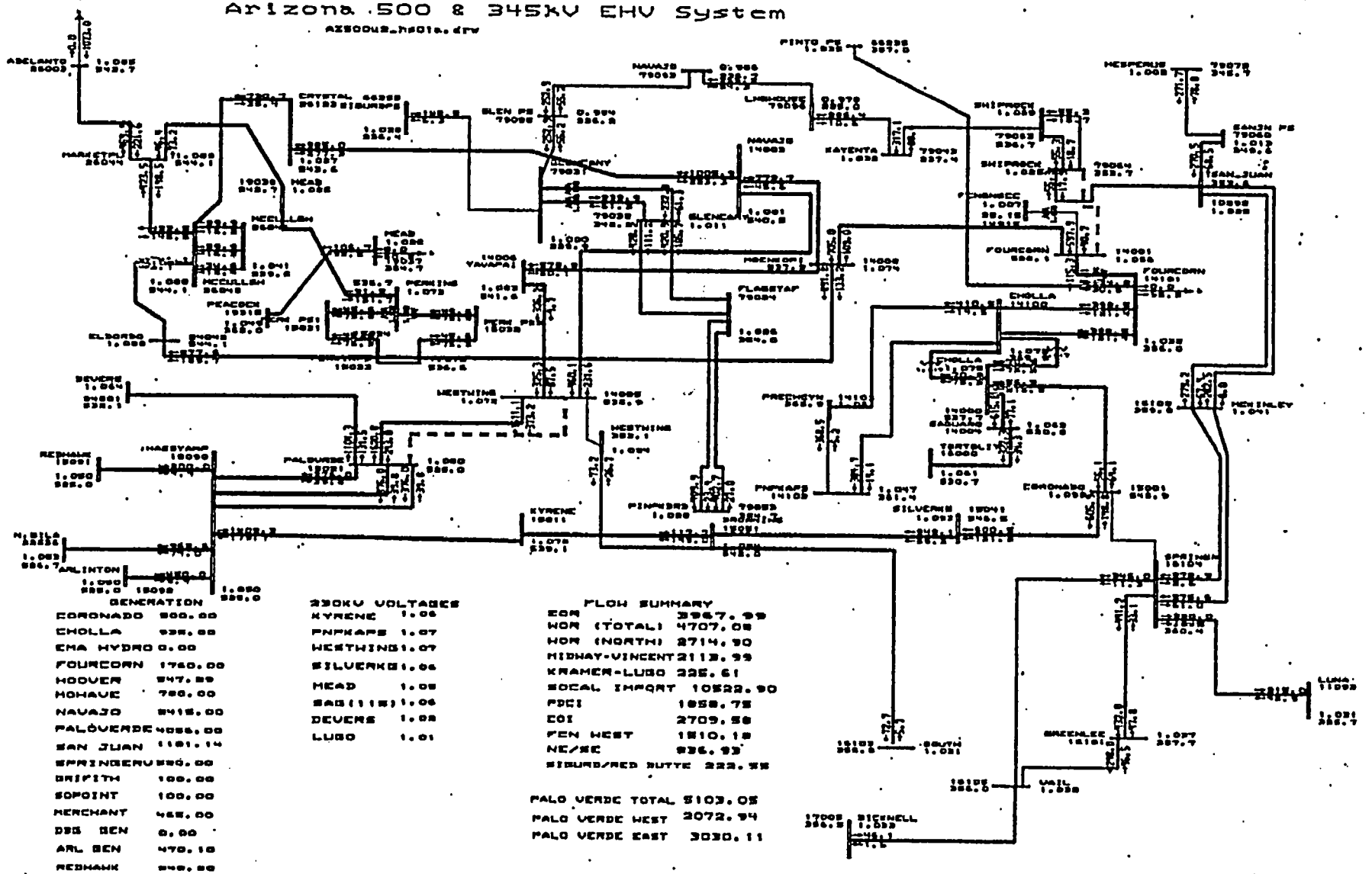

GENERATION	
CORONADO	800.00
CHOLLA	935.00
EMA HYDRO	0.00
FOURCORN	1740.00
HOOVER	547.89
MOHAVE	700.00
NAVAJO	2415.00
PALOVERDE	4055.00
SAN JUAN	1181.14
SPRINGERV	550.00
GRIFITH	100.00
SOPOINT	100.00
MERCHANT	455.00
DSS GEN	0.00
ARL GEN	470.10
REDHAWK	540.00

230KV VOLTAGES	
KYRENE	1.06
PNPKAPS	1.07
WESTWING	1.07
SILVERKG	1.06
MEAD	1.05
SAG(115)	1.06
DEVERS	1.05
LUGO	1.01

FLOW SUMMARY	
EOR	3967.99
WOR (TOTAL)	4707.08
WOR (NORTH)	2714.90
MIDWAY-VINCENT	2113.99
KRAMER-LUGO	225.61
SOCAL IMPORT	10522.90
PDCI	1858.75
COI	2709.58
PEN WEST	1810.18
NE/SE	936.93
SIGURD/RED BUTTE	222.55

PALO VERDE TOTAL	5103.05
PALO VERDE WEST	2072.94
PALO VERDE EAST	3030.11

General Electric International, Inc. PSLF Program

69

APS TRANSMISSION OPERATIONS

WESTERN SYSTEMS COORDINATING COUNCIL
2002 LSP2 OPERATING CASE
MAY 11, 2001

PV-WG 12 105

J-02LSP-231PV1WW1250.SAV

MW/MVAR

THU MAY 16 10:09:04 2002

c:\ops\stab\az500_hssysapa.dr
c:\ops\stab\02lsp-231pv1ww1250
Rating =

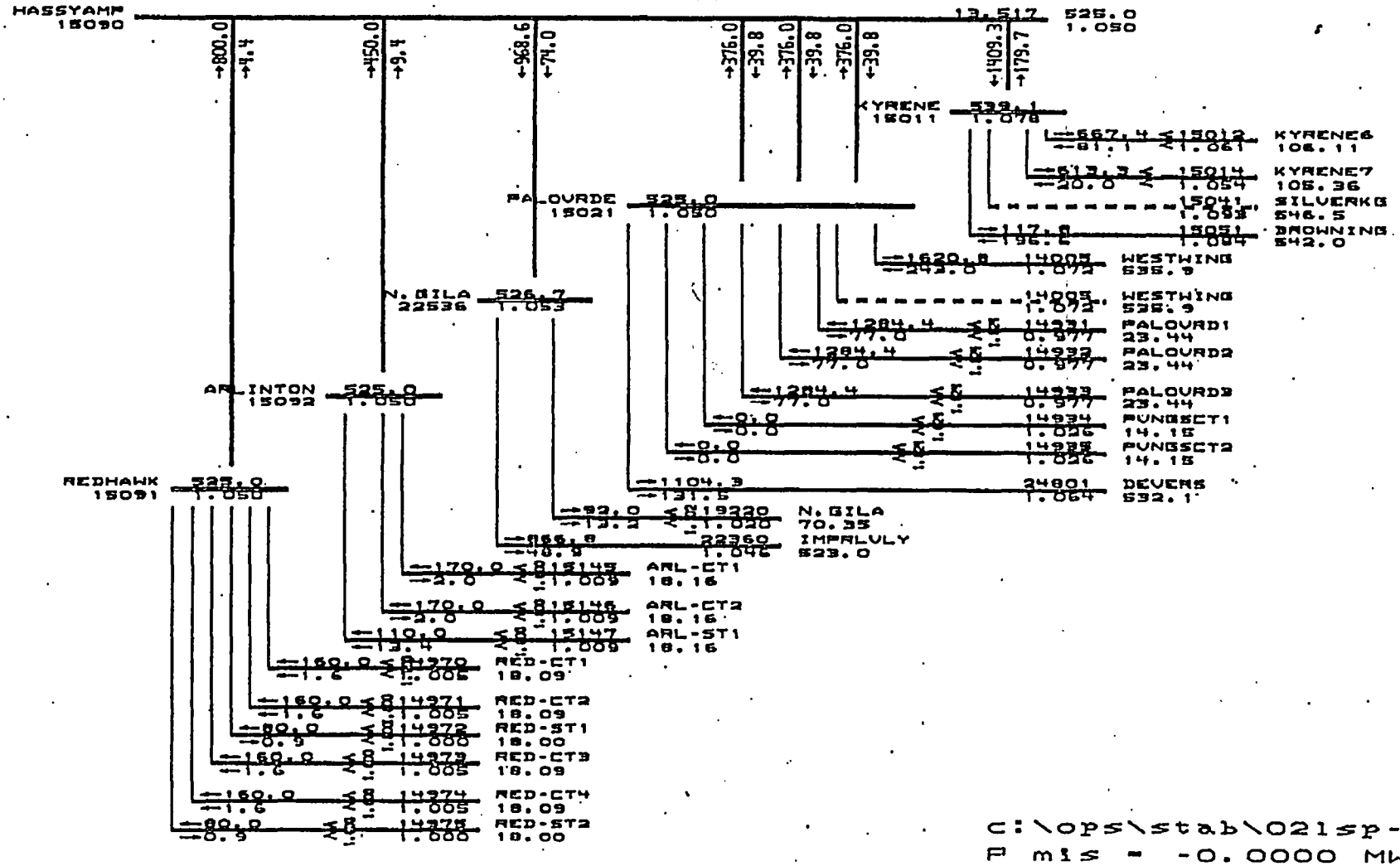

General Electric International, Inc. PSLF Program

APS TRANSMISSION OPERATIONS	WESTERN SYSTEMS COORDINATING COUNCIL 2002 LSP2 OPERATING CASE MAY 11, 2001	PV-MW 12 105	Thu May 16 10:07:19 2002 c:\ops\stab\b2500_hassyampa.dr c:\ops\stab\021sp-23lpvlwu1250 Rating = 1

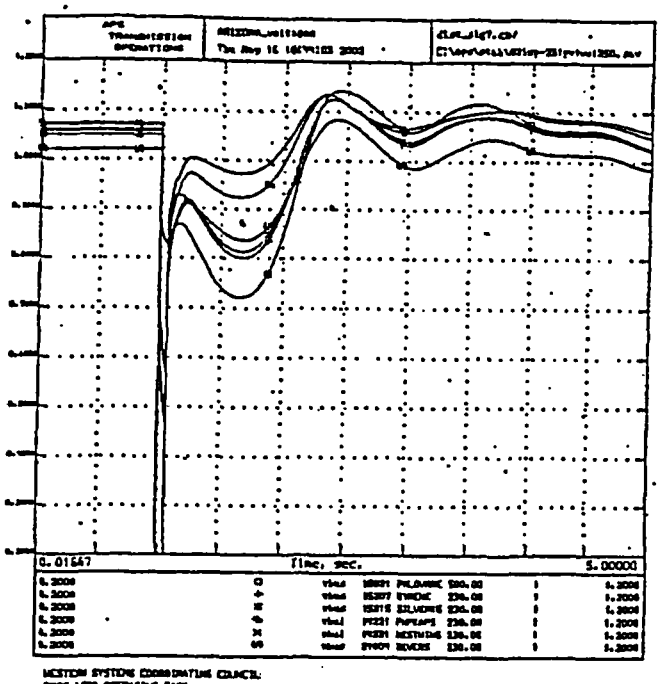

WESTERN SYSTEMS COORDINATING COUNCIL
2002 LSP2 OPERATING CASE
MAY 11, 2001
STAB, 3P FAULT ON PV 500 KV BUS; PV-MAE OUT;19 C CLR FLT W/PV-MAE;
7C TRIP RCBO,ARLD,20% DIRECT. MOTORS;G2LSP21.DYD

COMMENTS DUE TO AREA COORDINATORS MAY 18, 2001
AREA COORDINATOR COMMENTS DUE TO STAFF MAY 25, 2001

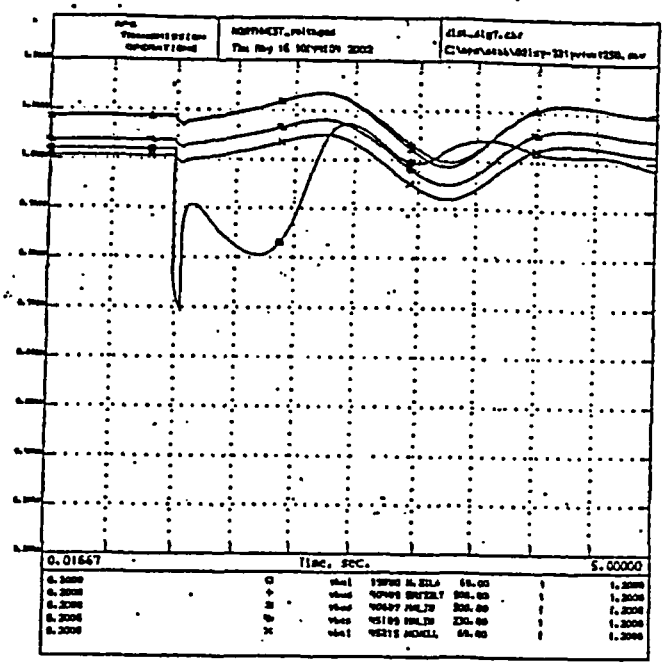

WESTERN SYSTEMS COORDINATING COUNCIL
2002 LSP2 OPERATING CASE
MAY 11, 2001
STAB, 3P FAULT ON PV 500 KV BUS; PV-MAE OUT;19 C CLR FLT W/PV-MAE;
7C TRIP RCBO,ARLD,20% DIRECT. MOTORS;G2LSP21.DYD

COMMENTS DUE TO AREA COORDINATORS MAY 18, 2001
AREA COORDINATOR COMMENTS DUE TO STAFF MAY 25, 2001

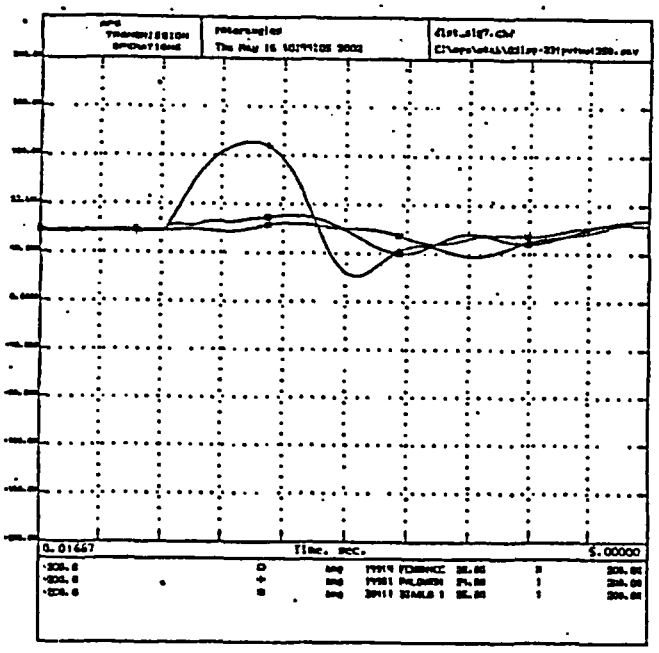

WESTERN SYSTEMS COORDINATING COUNCIL
2002 LSP2 OPERATING CASE
MAY 11, 2001
STAB, 3P FAULT ON PV 500 KV BUS; PV-MAE OUT;19 C CLR FLT W/PV-MAE;
7C TRIP RCBO,ARLD,20% DIRECT. MOTORS;G2LSP21.DYD

COMMENTS DUE TO AREA COORDINATORS MAY 18, 2001
AREA COORDINATOR COMMENTS DUE TO STAFF MAY 25, 2001

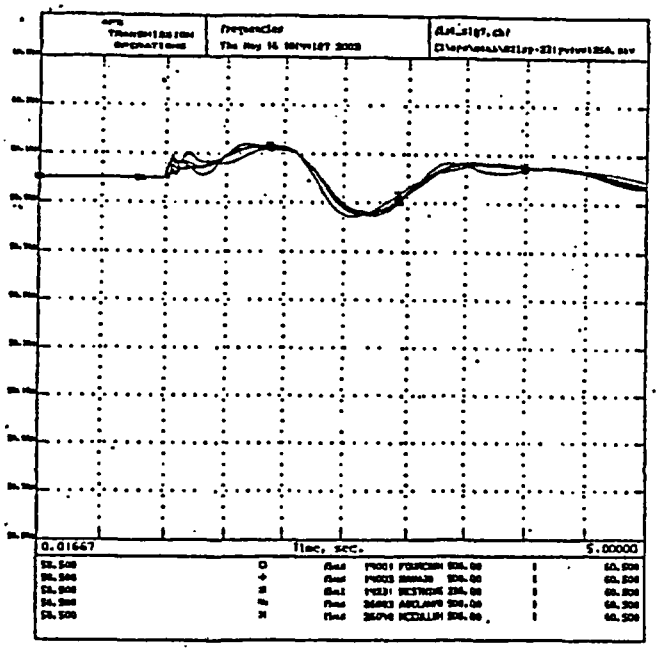

WESTERN SYSTEMS COORDINATING COUNCIL
2002 LSP2 OPERATING CASE
MAY 11, 2001
STAB, 3P FAULT ON PV 500 KV BUS; PV-MAE OUT;19 C CLR FLT W/PV-MAE;
7C TRIP RCBO,ARLD,20% DIRECT. MOTORS;G2LSP21.DYD

COMMENTS DUE TO AREA COORDINATORS MAY 18, 2001
AREA COORDINATOR COMMENTS DUE TO STAFF MAY 25, 2001

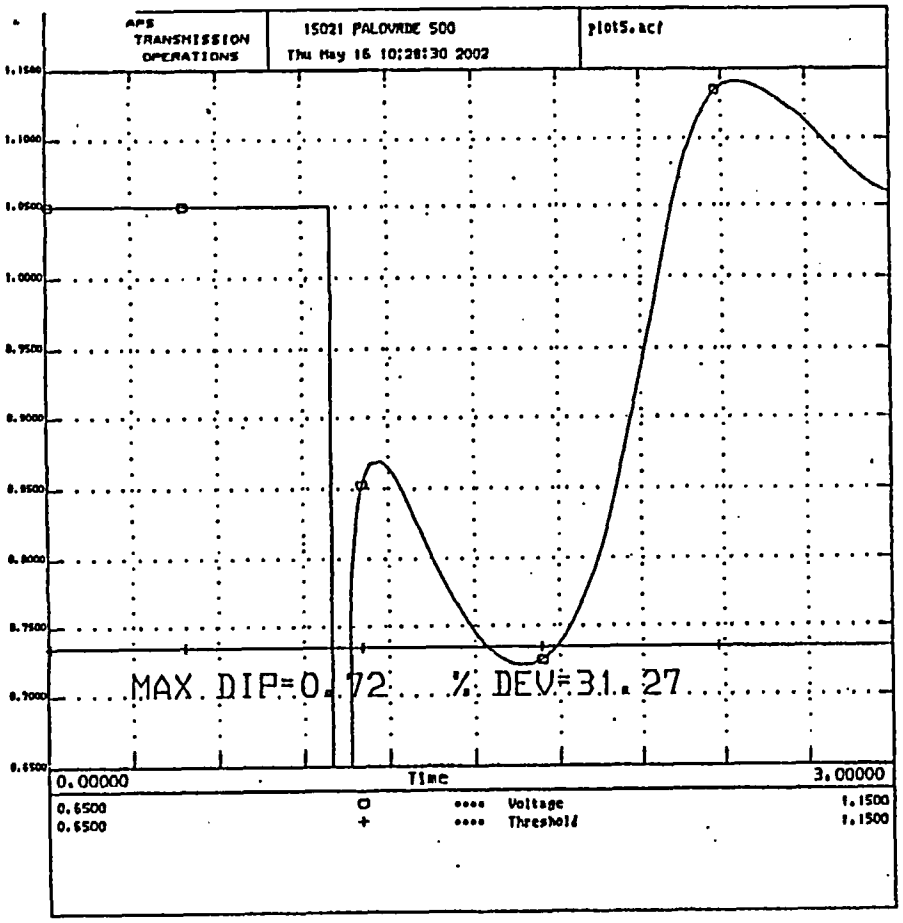

WESTERN SYSTEMS COORDINATING COUNCIL
2002 LSP2 OPERATING CASE
MAY 11, 2001
STAB, 3P FAULT ON PV 500 KV BUS; PV-HWG OUT;4 C CLR FLT W/PV-HWG;
7c TRIP REDO,ARLO,20% INDUCT. MOTORS;02LSP21.DYD

COMMENTS DUE TO AREA COORDINATORS MAY 18, 2001
AREA COORDINATOR COMMENTS DUE TO STAFF MAY 25, 2001

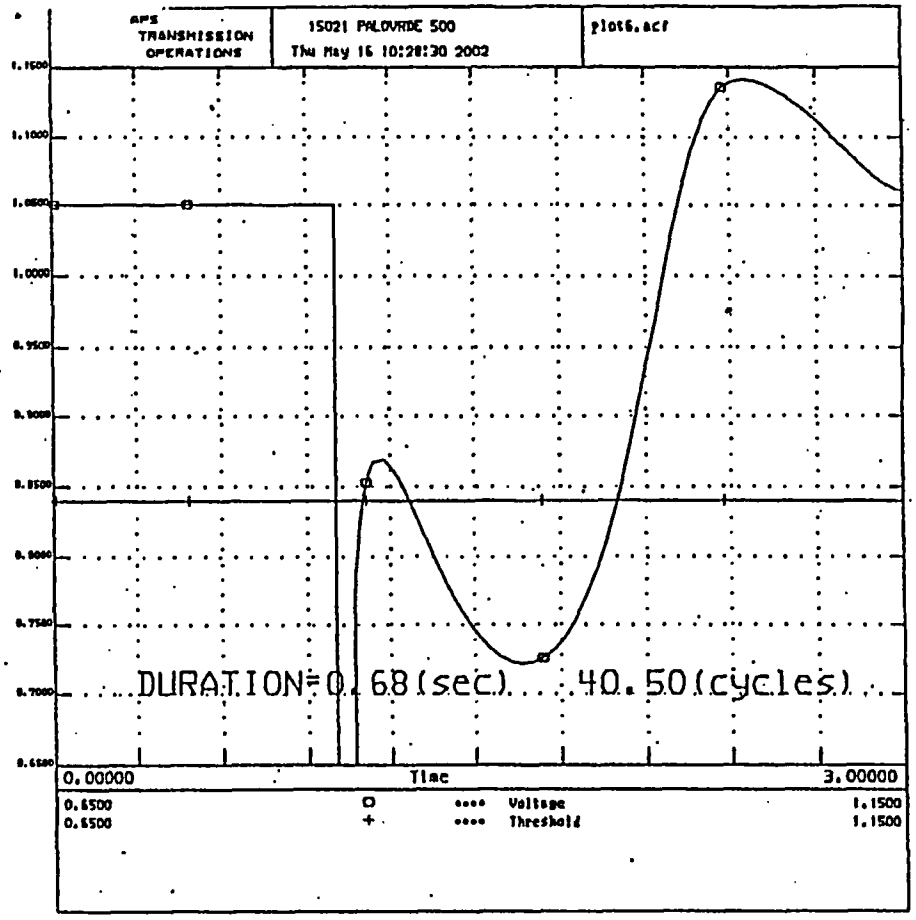

WESTERN SYSTEMS COORDINATING COUNCIL
2002 LSP2 OPERATING CASE
MAY 11, 2001
STAB, 3P FAULT ON PV 500 KV BUS; PV-HWG OUT;4 C CLR FLT W/PV-HWG;
7c TRIP REDO,ARLO,20% INDUCT. MOTORS;02LSP21.DYD

COMMENTS DUE TO AREA COORDINATORS MAY 18, 2001
AREA COORDINATOR COMMENTS DUE TO STAFF MAY 25, 2001