ENERGY NORTHWEST People · Vision · Solutions	CALCULATION COVER SHEET	BDC/PDC Page

Equipment Piece No.	Project Columbia	Page 1.0 Cont'd on Page 1.1
Containment	Discipline Nuclear	Calculation No. NE-02-04-05
		Quality Class 1
	Remarks **Non-Proprietary Version**	

TITLE/SUBJECT/PURPOSE

Title/Subject

Columbia Offsite and Control Room Doses for LOCA Using AST and NRC Methods

Purpose

This calculation details an application of the Alternative Source Term (AST) to Energy Northwest's Columbia Generating Station (Columbia) using NRC-based methodology. Its purpose is to justify the deletion of the Main Steam Isolation Valves Leakage Control System (MSIV-LCS), and resolve both the secondary containment drawdown and control room inleakage USQs.

CALCULATION REVISION RECORD

REV NO.	STATUS/ F,P, OR S	REVISION DESCRIPTION	INITIATING DOCUMENTS	TRANSMITTAL NO.
0	F	New Calculation		

PERFORMANCE/VERIFICATION RECORD

REV NO.	PERFORMED BY/DATE	VERIFIED BY/DATE	APPROVED BY/DATE
0	Jim Metcalf 7/21/04	Bernard Nowack 7-25-04	Bernard Nowack 7-25-04

* Study Calculations shall be used only for the purpose of evaluating alternate design options or assisting the engineer in performing assessments.

ENERGY NORTHWEST
People · Vision · Solutions

CALCULATION INDEX

Calculation No. NE-02-04-05

Revision No. 0

ITEM		PAGE NO. SEQUENCE
Calculation Cover Sheet	1.0 -	
Calculation Index	1.1 -	
Verification Checklist for Calculations and CMR's	1.2 -	
Calculation Reference List	1.3 -	
Calculation Output Interface Documents Revision Index	1.4 -	
Calculation Output Summary	2.0 -	
Calculation Method	3.0 -	
Sketches	4.0 -	
Manual Calculation	5.0 -	5.20

APPENDICES:

STARDOSE "Input.dat" Files (8 files)	Appendix	A	54	Pages A1-A54
STARDOSE "Libfile1.txt" File	Appendix	B	2	Pages B1-B2
Excerpts from STARDOSE "Results.out" (8 files)	Appendix	C	8	Pages C1-C8
STARDOSE "Results.out" Data and EAB Dose Calculation	Appendix	D	1	Pages D1
STARDOSE "Results.out" Data Supporting 98% Particulate Removal at t = 2.44 Hours	Appendix	E	1	Pages E1
Check Calculation with RADTRAD	Appendix	F	5	Pages F1-F5
Columbia RADTRAD .NIF Files (2 files)	Appendix	F1	16	Pages F1-1-F1-16
Columbia RADTRAD .RFT File (1 file)	Appendix	F2	1	Pages F2-1
Columbia RADTRAD Dose Conversion Factors (1 file)	Appendix	F3	10	Pages F3-1-F3-10
Columbia RADTRAD .PSF Files (10 files)	Appendix	F4	80	Pages F4-1-F4-80
Columbia RADTRAD Output File Excerpts (10 files)	Appendix	F5	10	Pages F5-1-F5-10
Columbia RADTRAD Two-Hour EAB Dose	Appendix	F6	2	Pages F6-1 F6-2

ATTACHMENTS:

Loss of Spray Droplets in Columbia Drywell	Attachment	1	12	Pages Att1-1 – Att1-10*
Liquid Bypass Leakage	Attachment	2	21	Pages Att2-1 – Att2-21
Control Room Filter Shine	Attachment	3	16	Pages Att3-1 – Att3-16

*Including pages 7a and 7b – in proprietary version only

ENERGY NORTHWEST People·Vision·Solutions	VERIFICATION CHECKLIST	Page No. 1.2	Cont'd on page 1.3
		Calculation No. NE-02-04-05	
		Revision No. 0	

Calculation/CMR NE-02-04-05 **Revision** 0
was verified using the following methods:

☒ Checklist Below ☐ Alternate Calculation(s)

Checklist Item	Verifier Initials
Clear statement of purpose of analysis	BRA
Methodology is clearly stated, sufficiently detailed, and appropriate for the proposed application	BRA
Does the analysis/calculation methodology (including criteria and assumptions) differ from that described in the Plant or ISFSI FSAR or NRC Safety Evaluation Report, or are the results of the analysis/calculation as described in the Plant or ISFSI FSAR or NRC Safety Evaluation Report affected? ☒ Yes ☐ No PTL #205295	LSW
If Yes, ensure that the requirements of 10 CFR 50.59 and/or 10 CFR 72.48 have been processed in accordance with SWP-LIC-02.	LSW
Does the analysis/calculation result require revising any existing output interface document as identified in DES-4-1, Attachment 7.3? ☒ Yes ☐ No	LSW
If Yes, ensure that the appropriate actions are taken to revise the output interface documents per DES-4-1, section 3.1.8 (i.e., document change is initiated in accordance with applicable procedures).	LSW
Logical consistency of analysis	BRA
• Completeness of documenting references	BRA
• Completeness of input	BRA
• Accuracy of input data	BRA
• Consistency of input data with approved criteria	BRA
• Completeness in stating assumptions	BRA
• Validity of assumptions	BRA
• Calculation sufficiently detailed	BRA
• Arithmetical accuracy	BRA
• Physical units specified and correctly used	BRA
• Reasonableness of output conclusion	BRA
Supervisor independency check (if acting as Verifier)	NA
- Did not specify analysis approach	
- Did not rule out specific analysis options	
- Did not establish analysis inputs	NO
If a computer program was used:	BRA
- Is the program appropriate for the proposed application? YES BRA	
- Have the program error notices been reviewed to determine if they pose any limitations for this application? NA	
- Is the program name, revision number, and date of run inscribed on the output?	
- Is the program identified on the Calculation Method Form? YES BRA If so, is it listed in Chapter 10 of the Engineering Standards Manual? YES BRA	NA
Other elements considered:	NA

If separate Verifiers were used for validating these functions or a portion of these functions, each sign and initial below.

Based on the foregoing, the Calculation/CMR is adequate for the purpose intended.

Verifier Signature(s)/Date	Verifier Initials
7-25-04	BRA
LSW 8/9/04	LSW

ENERGY NORTHWEST People · Vision · Solutions	CALCULATION REFERENCE LIST	Page No. 1.3	Cont'd on page 1.4
		Calculation No. NE-02-04-05	
Prepared by / Date: JEN 7/21/04	Verified by/Date: BLA 7-25-04	Revision No. 0	

NO	AUTHOR	ISSUE DATE/ EDITION OR REV.	TITLE	DOCUMENT NO.
1	US NRC	4/98 Sup. 1 – 6/99, Sup. 2 –10/02	RADTRAD: A Simplified Model for Radionuclide Transport and Removal and Dose Estimation	NUREG/CR-6604
2		1988	Limiting Values of Radionuclide Intake and Air Concentration and Dose Conversion Factors for Inhalation, Submersion, and Ingestion	Federal Guide 11
3	US NRC	Revision 0 July 2000	Alternative Radiological Source Terms for Evaluating Design Basis Accidents at Nuclear Power Reactors	Reg. Guide 1.183
4	POLESTAR	01/31/97 Rev. 0	Stardose Model Report	STARDOSE Version 1.01, PSAT CI09.03
5			RADTRAD Executable Version 3.03	RADTRAD Executable Version 3.03
6	Energy Northwest	Revision 1	Dose Calculation Data Base	NE-02-04-01
7	US NRC	February 1990	MELCOR Accident Consequence Code System (MACCS)	NUREG/CR-4691
8	US Atomic Energy Commission J.J. DiNunno et al	1962	Calculation of Distance Factors for Power and Test Reactor Sites	USAEC TID-14844
9				Columbia FSAR
10		08/07/03		CMR-2610
11	Energy Northwest	Revision 0	Alternative Source Term Calculation	NE-02-01-12
12	Energy Northwest	Revision 0	Post-LOCA Suppression Pool pH	NE-02-03-15
13	US NRC		Containment Spray as a Fission Product Cleanup System	Standard Review Plan, Section 6.5.2
14		12/09/98	Assessment of Radiological Consequences for the Perry Pilot Plant Application using the Revised (NUREG-1465) Source Term	AEB-98-03
15	POLESTAR	Revision 0	Aerosol Removal in the Drywell and Steamlines	PSAT 206.QA.01.06
16	US NRC	Version SAIC 9/23/87	Manual for TACT5	NUREG/CR-5106
17	POLESTAR	Revision 1,10/19/01	Columbia Control Room Shine Dose Calculation	PSAT 206CT.QA.01.11

ENERGY NORTHWEST People · Vision · Solutions	CALCULATION OUTPUT INTERFACE DOCUMENT REVISION INDEX	Page No. 1.4	Cont'd on page 2.0
		Calculation No. NE-02-04-05	
Prepared by / Date: JM 7/21/04	Verified by/Date: BJM 7-25-04	Revision No. 0	

The below listed output interface calculations and/or documents are impacted by the current revision of the subject calculation. The listed output interfaces require revision as a result of this calculation. The documents have been revised, or the revision deferred with Manager approval, as indicated below.

AFFECTED DOCUMENT NO.	CHANGED BY (e.g., BDC, SCN, CMR, Rev.)	CHANGED DEFERRED (e.g., RFTS, LETTER NO.)	DEPT. MANAGER *
FSAR 15.6.5	PDC 2406		

* Required for deferred changes only.

Discussion of Results

These results are based on removal of the MSIV-LCS, a secondary containment drawdown time of 20 minutes, no credit for secondary containment holdup, an MSIV allowable leakage of 16 scfh per line at test conditions, an MSIV single failure to close, and 75 cfm of unfiltered control room inleakage (two train Control Room Emergency Filtration (CREF) operation) and 50 cfm of unfiltered control room inleakage (one train CREF operation). Dose conversion factors are based on Reference 1 which is consistent with Reference 2. The results are summarized below.

CR Dose QA Results

Control Room Dose Following a LOCA (rem)

Control Room Intake Flow	Whole Body*	CEDE	TEDE	Reg Limit (TEDE)
Minimum – both CREF trains start and run indefinitely	0.41	2.80	3.21	5
Minimum – secure one CREF train at eight hours	0.44	2.97	3.41	5
Minimum – single failure of one CREF train to start – **Licensing Basis Case**	0.44	3.01	3.44	5
Maximum – single failure of one CREF train to start	0.42	2.72	3.14	5

* "Effective Cloudshine" from Reference 1

Offsite Dose QA Results

Offsite Doses Following a LOCA at EPZ and LPZ Locations (rem)

	Whole Body*	CEDE	TEDE	Reg Limit (TEDE)
EAB Dose (rem)**	2.26	1.77	4.04	25
LPZ Dose (rem)	2.74	1.11	3.85	25

* "Effective Cloudshine" from Reference 1

** The EAB dose represents the highest dose over a 2-hour period following the accident

Conclusions

CR Dose Results - The conclusion from these results is that the DBA-LOCA CR dose is below the 5.0 rem TEDE regulatory limit for control room operator exposure given in Reference 3 for DBA-LOCA.

Offsite Doses Results - The conclusion from these results is that the DBA-LOCA offsite doses are well below the 25 rem TEDE regulatory limit from Reference 3 for DBA-LOCA.

Analysis Method (Check appropriate boxes)

- ☐ Manual (As required, document source of equations in Reference List)
- ☒ Computer ☐ Main Frame ☐ Personal
  - ☐ In-House Program
  - ☐ Computer Service Bureau Program
    - ☐ BCS ☐ CDC ☐ PCC ☐ OTHER _____
- ☒ Verified Program: Code name/Revision STARDOSE, version 1.01
- ☐ Unverified Program: _____

Approach/Methodology

The STARDOSE computer code (Reference 4) is used for the dose calculation, in parallel with RADTRAD (Reference 5) being used in a check calculation. The licensing-basis case is the case with minimum intake flow and the failure of a CREF train to start. Only the licensing-basis case is confirmed with RADTRAD. The case with two trains initially operating (and minimum intake flow) but with one train secured at eight hours produces essentially the same control room dose as the licensing-basis case.

The analysis is presented as follows:

1. Design input summary,
2. Assumptions,
3. Physical description of the plant,
4. Treatment of atmospheric dispersion (control room and offsite X/Qs),
5. Description of phenomenology related to the AST application, including source term, spray removal in containment, and natural removal in the steam lines,
6. Dose calculation and results using the STARDOSE computer code, and
7. Check calculation using RADTRAD.

The plant model used for the dose calculation is shown on Figure 1, page 4.000, and widely discussed in Section 5.

Figure 1 - Columbia Plant Model

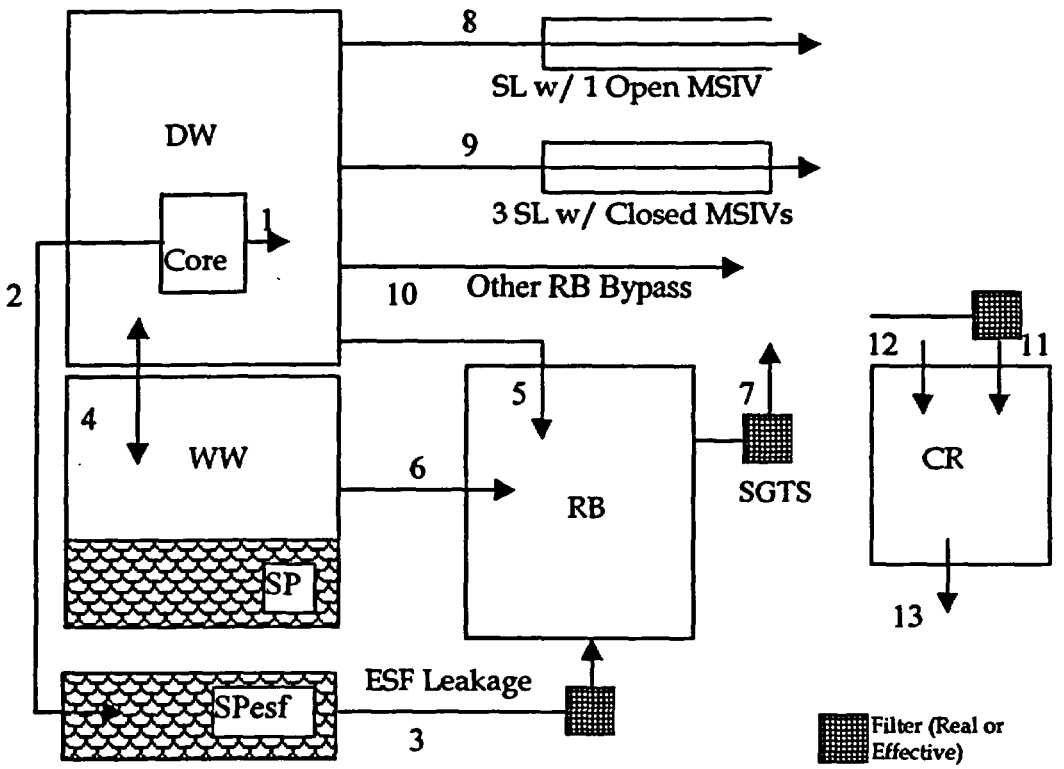

SP Suppression Pool
SPesf Suppression Pool (for Parallel Treatment of ESF Leakage Only)

5. Calculation

The control room and offsite doses for the DBA-LOCA are carried out in this section.

5.1 Design Input

Core Power - 3556 MWt *(Reference 6, Item 1.1)*

The T.S. value was increased by 2% to account for power measurement uncertainties in accordance with SRP 15.6.5.

Core Inventory @ t=0 *(Reference 6, Item 1.2)*

Nuclide	Ci/MWt	Nuclide	Ci/MWt	Nuclide	Ci/MWt
Kr83m	3.57E+03	I134Part	6.03E+04	Y93	3.56E+04
Kr85m	7.35E+03	I135Part	5.03E+04	Zr95	4.27E+04
Kr85	4.11E+02	Rb86	4.47E+01	Zr97	4.33E+04
Kr87	1.34E+04	Cs134	6.27E+03	Nb95	4.27E+04
Kr88	1.90E+04	Cs136	1.39E+03	La140	4.71E+04
Kr89	2.20E+04	Cs137	5.05E+03	La141	4.36E+04
Xe131m	2.79E+02	Sb127	3.31E+03	La142	4.17E+04
Xe133m	1.66E+03	Sb129	9.48E+03	Pr143	3.78E+04
Xe133	5.43E+04	Te127m	4.66E+02	Nd147	1.71E+04
Xe135m	1.11E+04	Te127	3.31E+03	Am241	7.67E+00
Xe135	1.31E+04	Te129m	1.39E+03	Cm242	1.74E+03
Xe137	4.65E+04	Te129	8.90E+03	Cm244	1.41E+02
Xe138	3.59E+04	Te131m	4.20E+03	Ce141	4.43E+04
I131Org	2.79E+04	Te132	3.99E+04	Ce143	4.01E+04
I132Org	3.94E+04	Ba137m	3.01E+03	Ce144	3.25E+04
I133Org	5.44E+04	Ba139	4.72E+04	Np239	7.01E+05
I134Org	6.03E+04	Ba140	4.58E+04	Pu238	9.56E+01
I135Org	5.03E+04	Mo99	4.90E+04	Pu239	1.89E+01
I131Elem	2.79E+04	Tc99m	4.34E+04	Pu240	3.11E+01
I132Elem	3.94E+04	Ru103	4.70E+04	Pu241	8.85E+03
I133Elem	5.44E+04	Ru105	3.46E+04	Sr89	2.02E+04
I134Elem	6.03E+04	Ru106	2.04E+04	Sr90	3.34E+03
I135Elem	5.03E+04	Rh105	3.27E+04	Sr91	2.59E+04
I131Part	2.79E+04	Y90	2.04E+03	Sr92	3.01E+04
I132Part	3.94E+04	Y91	2.73E+04		
I133Part	5.44E+04	Y92	2.90E+04		

Volume of Drywell – 200,540 ft3 *(Reference 6, Item 3.1)*

Volume of Wetwell – Vapor: 144,184 ft3 *(Reference 6, Item 3.2)*

*Volume of Wetwell – Water: 137,262 ft3** *(Reference 6, Item 3.3)*

*Includes water in pedestal and water lower than 12' below vent exit

Volume of Control Room (free volume) – 214,000 ft3 *(Reference 6, Item 3.5)*

Volume of One Main Steam Line between MSIVs – 64.8 ft3 *(Reference 6, Item 3.6)*

Secondary Containment Mixing Fraction – 0% *(Reference 6, Item 3.11)*

(5000 ft^3 used to represent zero volume)

Secondary Containment Drawdown time – 20 Minutes *(Reference 6, Item 8.5)*

Volumetric Flowrate, Drywell to Environment, Non-MSIV

Secondary Containment Bypass (before drawdown)
0.54 % DW Volume per Day *(Reference 6, Item 3.7)*
Secondary Containment Bypass (after drawdown)
0.04 % DW Volume per Day *(Reference 6, Item 3.7)*

Volumetric Flowrate, Wetwell to Environment

Secondary Containment Bypass (before drawdown)
0.54 % WW Volume per Day *(Reference 6, Item 3.8)*
Secondary Containment Bypass (after drawdown)
0.04 % WW Volume per Day *(Reference 6, Item 3.8)*

Volumetric Flowrate, Drywell to Secondary Containment: *(Reference 6, Item 3.18)*

0 % DW Volume per Day (before drawdown)
0.5 % DW Volume per Day (after drawdown)

Volumetric Flowrate, Wetwell to Secondary Containment: *(Reference 6, Item 3.19)*

0 % WW Volume per Day (before drawdown)
0.5 % WW Volume per Day (after drawdown)

Volumetric Flowrate, Sec. Cont. to Enviro. – Through SGTS *(Reference 6, Item 3.10)*

5000 cfm (before drawdown)
5000 cfm (after drawdown), see filter bypass

Volumetric Flowrate, Sec. Cont. to Enviro. – Bypassing SGTS *(Reference 6, Item 3.17)*

50 cfm (after drawdown)

Filter Efficiency - Standby Gas Treatment System *(Reference 6, Item 4.1)*

0% efficiency for all species (before drawdown)
99% efficiency for all species except noble gases (after drawdown)

Volumetric Flowrate, ESF Leakage – 1 gpm (0.134 cfm) *(Reference 6, Item 3.9)*

Vol. Flowrate, Environment to CR (Unfiltered) *(Reference 6, Item 3.12)*

50 cfm (single CREF train, including 10 cfm ingress/egress)
75 cfm (two CREF trains, including 10 cfm ingress/egress)

Vol. Flowrate, Environment to CR (Charcoal Filter): *(Reference 6, Items 3.13 and 3.15)*

800 cfm min, 900 cfm max (single CREF train)
1300 cfm min, 1600 cfm max (two CREF trains)

Filter Efficiency - CREF Filter *(Reference 6, Item 4.2)*

Particulate: 99%
Elemental: 95%
Organic: 95%

*Vol. Flowrate, DW to All Main Steam Lines: 16 scfh per valve** *(Reference 6, Item 3.14)*

*Rounded off from 16.1 scfh

MSIV Test Conditions: Test Pressure > 25 psig *(Reference 6, Item 7.2)*

Assumed Drywell Conditions for Converting Bypass SCFH to CFH (including MSIV):

Calc Pressure = 37.4 psig, Calc Temp. = 283 F *(Reference 6, Item 7.3)*

X/Q (sec/m3) *(Reference 6, Item 5.1)*

Effective X/Qs for Control Room with 800 cfm intake flow (single-train CREF, min flow)

Time Frame	Turbine Building[1]	SCN Bypass[1,3]	SGTS Release[1]	Turbine Building[2]	SCN Bypass[2,3]	SGTS Release[2]
0 - 2 hrs	8.81E-04	2.82E-04	1.43E-04	4.70E-03	7.02E-04	6.95E-04
2 - 8 hrs	3.75E-04	2.17E-04	1.05E-04	2.00E-03	3.19E-04	3.36E-04
8 - 24 hrs	1.93E-04	8.77E-05	4.14E-05	1.03E-03	1.30E-04	1.28E-04
1 - 4 days	1.50E-04	7.42E-05	3.52E-05	8.01E-04	1.05E-04	9.72E-05
4 - 30 days	1.44E-04	6.40E-05	3.03E-05	7.69E-04	9.00E-05	7.69E-05

1 – To Filtered Intake 2 – To Unfiltered Inleakage
3 – Average of "KK doors SC bypass" and "RBW SC bypass"

Effective X/Qs for Control Room with 900 cfm intake flow (single-train CREF, max flow)

Time Frame	Turbine Building[1]	SCN Bypass[1,3]	SGTS Release[1]	Turbine Building[2]	SCN Bypass[2,3]	SGTS Release[2]
0 - 2 hrs	7.83E-04	2.90E-04	1.47E-04	4.70E-03	7.02E-04	6.95E-04
2 - 8 hrs	3.33E-04	2.23E-04	1.08E-04	2.00E-03	3.19E-04	3.36E-04
8 - 24 hrs	1.72E-04	8.99E-05	4.25E-05	1.03E-03	1.30E-04	1.28E-04
1 - 4 days	1.34E-04	7.62E-05	3.61E-05	8.01E-04	1.05E-04	9.72E-05
4 - 30 days	1.28E-04	6.56E-05	3.10E-05	7.69E-04	9.00E-05	7.69E-05

1 – To Filtered Intake 2 – To Unfiltered Inleakage
3 – Average of "KK doors SC bypass" and "RBW SC bypass"

Effective X/Qs for Control Room with 1300 cfm intake flow (two-train CREF, min flow)

Time Frame	Turbine Building[1]	SCN Bypass[1,3]	SGTS Release[1]	Turbine Building[2]	SCN Bypass[2,3]	SGTS Release[2]
0 - 2 hrs	5.42E-04	3.08E-04	1.56E-04	4.70E-03	7.02E-04	6.95E-04
2 - 8 hrs	2.31E-04	2.36E-04	1.15E-04	2.00E-03	3.19E-04	3.36E-04
8 - 24 hrs	1.19E-04	9.52E-05	4.51E-05	1.03E-03	1.30E-04	1.28E-04
1 - 4 days	9.24E-05	8.07E-05	3.83E-05	8.01E-04	1.05E-04	9.72E-05
4 - 30 days	8.87E-05	6.97E-05	3.30E-05	7.69E-04	9.00E-05	7.69E-05

1 – To Filtered Intake 2 – To Unfiltered Inleakage
3 – Average of "KK doors SC bypass" and "RBW SC bypass"

X/Qs for EAB

0 – 30 days	1.81E-04

X/Qs for LPZ

0 – 8 hr	4.95E-05
8 – 24 hr	3.69E-05
1 – 4 days	1.95E-05
4 – 30 days	7.81E-06

X/Qs for CST

0 – 2 hr	4.18E-04
2 – 8 hr	1.59E-04
8 – 24 hr	6.31E-05
1 – 4 days	5.78E-05
4 – 30 days	5.57E-05

Breathing Rates *(Reference 6, Item 5.3)*

CR Breathing Rates (m^3/s)

0 – 30 days	3.5E-4

EAB, LPZ and Environment Breathing rates (m^3/s)

0 – 8 hr	3.5E-4
8 – 24 hr	1.8E-4
1 – 30 days	2.3E-4

CR Occupancy Factors *(Reference 6, Item 5.4)*

Values in fractions:

0 – 24 hr	1.0
1 –4 days	0.6
4 – 30 days	0.4

Normal Operational Steam Line Temperature - 544 F *(Reference 6, Item 7.1)*

DW Spray flow rate – 7450 gpm/train (2 trains available) *(Reference 6, Item 3.16)*

Spray Initiation Time – 15 minutes (conservative value based on the radiological criteria of item below) *(Reference 6, Item 8.6)*

Drywell Spray Initiation Based on Radiation (TSG entry condition)

– 14,000 R/Hr in Drywell *(Reference 6, Item 8.9)*

5.2 Assumptions

Assumption 1 The nuclides listed in Section 5.1 of this document meet the requirements of Section 3.4 of Reference 3 (RG 1.183).

Justification The nuclides used for Columbia are the 60 identified as being potentially important contributors to TEDE in Reference 7 (NUREG/CR-4691, MACCS User's Guide) (less the two cobalt isotopes which have a minor impact) plus four additional noble gas isotopes from Reference 8 (TID-14844), plus three other short-lived noble gas isotopes, plus Ba137m for a total of 66.

The differences between the NUREG/CR-4691 isotope subset and Columbia's can generally be categorized as two types; neglect of activation products that are not part of the fuel, and addition of noble gases that do have an impact. The favorable control room dose impact of neglecting Co-58 and Co-60 is approximately an order of magnitude less than the adverse dose impact of adding Kr-83m, Kr-89, Xe-131m, Xe-133m, Xe-135m, Xe-137, and Xe-138. Therefore, the resulting changes are more conservative than the NUREG/CR-4691 (or the NUREG/CR-6604; i.e., RADTRAD) isotope subset, and this isotope subset also more accurately reflects the contents of the fuel.

Assumption 2: Columbia's containment leakage is reduced by 50% after 24 hours into the event.

Justification Assuming volumetric leakage from the containment varies as $(\Delta P/\rho)^{1/2}$ (approximately correct for a flowpath with some degree of resistance rather than an idealized "nozzle"), the variation of leakage vs. pressure for Columbia would be as follows:

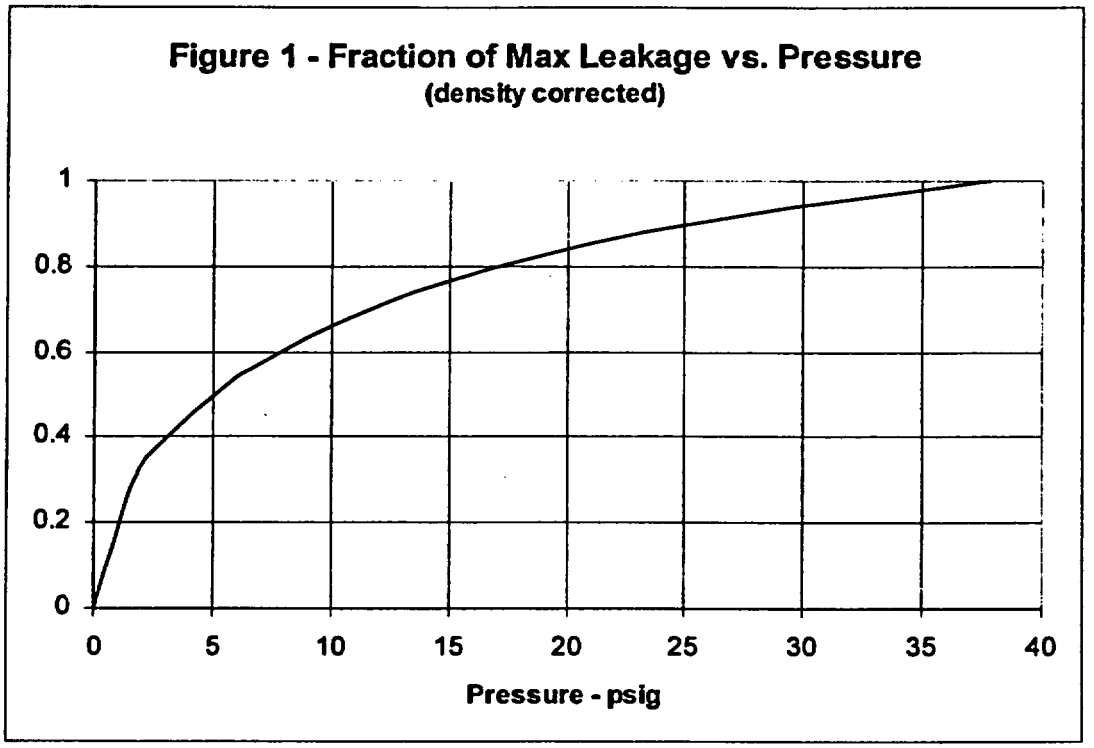

This figure shows that the leakrate would be expected to become about one-half of the maximum leakrate when the pressure is reduced by about a factor of eight. The factor of eight reduction in ΔP is concurrent with about a factor of two reduction in density, so the $\Delta P/\rho$ ratio goes down by about a factor of four from the accident peak.

As long as both trains of spray are operating, there is no difficulty in reducing the drywell pressure to less than 5 psig by 24 hours. If one train were to fail, however, it's possible that the drywell pressure could remain above 5 psig (but less than 10 psig) at 24 hours. This is evident from Reference 9, Figure 6.2-10 where it may be observed that with one heat exchanger operating, the drywell pressure begins to decrease after reaching its second peak 8 to 10 hours into the event (the highest drywell pressure of 52.1 psia (37.4 psig) having been reached at the first peak) with the pressure reaching 24.2 psia (9.5 psig) by about 14 hours. At about 14 hours, one can anticipate (from the shape of the curve) that by 24 hours the pressure may still be greater than 19.7 psia (5 psig). Studies have confirmed, however, that the control room dose with one RHR loop failed (and no leak rate reduction at 24 hours) is more favorable than that corresponding to the failure of an MSIV to close.

Assumption 3: Accident time = time after release + two minutes.

Justification: Unless otherwise stated, all times given in this calculation are accident times, beginning at t = 0 with the assumed DBA-LOCA leading to core damage. Even for the largest LOCA, there is a two-minute delay for BWRs between the start of the accident and the start of release. This is consistent with Reference 3.

5.3 Physical Description of the Plant

Columbia is a BWR/5 with a Mark II containment. The current rated power is 3486 MWt. However, the power level is increased by 2% to 3556 MWt in the analysis which follows to account for power measurement uncertainties in accordance with Reference 3.

5.3.1 Core Inventory

The core inventory is given in the Design Input section. These inventories are based on a plant-specific pre-1995 ORIGEN-2 run that has been adjusted. The three adjustments were (1) a power uprate scale factor of +5.28% to bound an uprate in power level to 3556 MWt, (2) a +25% correction for abnormally low krypton values (based on comparisons to other core inventory tables), and (3) a +60% increase in the activity of longer lived isotopes (half-lives greater than one year). This last correction is based on the ratio of the burn-up being assumed for the current calculation and that used as input to the available ORIGEN analysis (a ratio of 1.6). The one-year half-life threshold for applying the 1.6 factor is based on the assumption that isotopes with less than one-year half-lives will have reached equilibrium in the core. The use of the 1.6 multiplier for isotopes with half-lives greater than one year is conservative. These source term changes result in a conservative source term (in terms of activity available).

To confirm the conservatism of the Columbia-specific source term (in terms of activity available), the LOCA radiation dose which was calculated using the Columbia-specific source term was compared to that calculated using the generic BWROG source term for Cycle 28 using the same meteorological data and same dose input parameters (10 and 11). The results showed that the doses for the Columbia-specific source term were 2.4% greater than that for the Cycle 28 generic source term. This shows that the Columbia-specific source term is bounding and more conservative than the generic source term which, in itself, is also conservative. Therefore, since the Columbia-specific source has resulted in doses that are more conservative than the generic source term, this analysis continues to use the Columbia-specific source term as the basis for AST analysis.

5.3.2 Containment

Columbia's Mark II containment consists of two compartments with the following free volumes (from the Design Input section):

Drywell:		200,540 ft^3
Wetwell:	Gas	144,184 ft^3
	Water	137,262 ft^3

The two volumes are connected by a vent system, which allows any steam accidentally released from the reactor vessel (located in the drywell) to flow into the suppression pool. Non-condensables would then collect in the wetwell gas space above the pool. When the drywell pressure is reduced by condensation in the drywell (principally due to spray operation), a portion of these non-condensables will return to the drywell through vacuum breakers. Note that suppression pool scrubbing of activity carried to the suppression pool by the process described just above is not credited at all in this analysis.

At the end of the release phase (i.e. at 2.033 hours), it is assumed that both volumes become well mixed.

The containment is permitted by Technical Specification to leak at a maximum rate of 0.5 %/day (see Design Input). Because of post-accident containment depressurization this leak rate will decrease with time. NRC regulatory guidance (Reference 3) permits a factor of two reduction in this leak rate after 24 hours (see Assumption 2). This leakage is collected within the reactor building or secondary containment after drawdown is

complete (20 minutes per the Design Input section). Prior to drawdown, the containment leakage is assumed to leak directly to the environment.

5.3.3 Reactor Building

The reactor building has a large free volume; but in this analysis, the large free volume is ignored. No holdup is credited. (To accomplish this, the reactor building volume is artificially made equal to one minute's exhaust flow). Leakage into this structure is collected, processed, and directed up the plant vent by the Standby Gas Treatment System (SGTS) creating a "secondary containment". The SGTS has a flow rate of 5000 cfm (see Design Input). During the pre-drawdown period, the secondary containment is assumed to be completely bypassed. After this period, the filter efficiency for all forms of iodine and for particulates is 99% (see Design Input); however, there continues to be a filter bypass of 50 cfm, which reduces the filter efficiency to an effective value of 98% (see Design Input).

5.3.4 Reactor Building Bypass Leakages

MSIV leakage is the most important secondary containment bypass leakage. Per the Design Input section, it is limited to 16 scfh per valve, or 64 scfh for four steam lines at a test pressure of 39.7 psia (25 psig). Accident conditions assume a maximum DW pressure of 52.1 psia (37.4 psig) with a temperature of 283 F (see Design Input). As a result, 16 scfh corresponds to a mass flow of:

$$16(52.1/39.7) = 21 \text{ scfh}$$

at accident pressure, that translates into a volumetric flow rate of:

$$(21)(14.7/52.1)(743R)/(530R) = 8.31 \text{ cfh or } 0.1384 \text{ cfm.}$$

(Note that MSIV testing actually uses 528R as standard temperature rather than 530R, but the difference is negligible).

If the main steam lines and the main condenser were to remain intact (and because operation of the MSIV Leakage Control System or LCS is not credited), this MSIV leakage would eventually collect in the main condenser. However, for Columbia it is assumed that only the seismically-qualified main steam lines between the MSIVs and from the outboard MSIVs to the turbine stop valves remain intact. Because of the undefined condition at the turbine stop valves (e.g., the possibility of these valves remaining open and piping failed beyond), there may be the opportunity for significant free convection of outside air into that portion of the line. Accordingly, that portion of the piping is ignored; and only that portion between the MSIVs (average diameter of about 2 ft with a volume of 64.8 ft^3 – see Design Input) is available for retention. With consideration of a single failure of an MSIV to close, even this credit is available for only three of the four steam lines.

There is also bypass directly from the containment to the environment, in addition to the MSIV leakage described above. The current limit for this bypass is 0.04 %/day (see Design Input).

5.3.5 Suppression Pool

The pH of the suppression pool determines the fraction of dissolved iodine which may appear in elemental form as opposed to the more soluble iodide or iodate forms. Columbia's suppression pool pH is controlled to prevent acids produced from dissolved carbon dioxide and nitrogen in the suppression pool and from post-accident decomposition of chloride-bearing electrical insulation in the containment from lowering the suppression pool pH

to a point where iodine conversion to the elemental form becomes a concern. Per Reference 12, pH will remain above 7 and consequently, no iodine re-evolution is considered.

5.3.6 ESF Leakage

Engineered Safety Feature (ESF) leakage is that leakage associated with leaking fluid systems within the reactor building but outside primary containment (e.g. containment spray). For Columbia, it is assumed to be limited to one gpm (see Design Input). However, in accordance with Reference 3 (Appendix A, 5.2), the maximum ESF system liquid leak rate has been increased by a factor of two for conservatism, resulting in an "as analyzed" value of two gpm. Therefore, a two gpm (0.268 cfm) ESF leakage is assumed from the suppression pool into the reactor building, beginning when DW spray operation is assumed to start (at t = 15 minutes – see spray-related discussion, below). Per Reference 3, 10% of the iodine in the leaked suppression pool water is released to the secondary containment atmosphere as mostly elemental iodine with three percent organic iodine.

5.3.7 Control Room

The control room has a free volume of 2.14E5 ft^3 (see Design Input) and is assumed to leak (i.e., exchange with the environment) at a rate of 50 cfm in addition to the filtered intake flow rate of 800 cfm (minimum value) for the licensing basis case. This case has also been run with maximum flow (900 cfm) to verify that the minimum flow is limiting.

If both CREF trains are assumed to start as designed, then operators are permitted to secure one train not earlier than eight hours after the start of the accident. Such a case is included in this analysis. A case is also included in which both trains run indefinitely (both cases analyzed for minimum flow). A summary of the analyzed cases is as follows:

No. of Trains	Duration	Filtered flow rate, cfm	Unfiltered inleakage, cfm
1	30 days	800	50
1	30 days	900	50
2	First 8 hours	1300	75
1	Rest of 30 days	800	50
2	30 days	1300	75

The control room filter for the intake flow is 95% efficient for organic and elemental iodine forms and 99% efficient for particulates (see Design Input).

The operator can secure CREF from the control room. Operator response to abnormal conditions and annunciator signals is part of the operator training curriculum.

5.4 Atmospheric Dispersion

The Columbia site is located in Washington State near the Tri-Cities. The distance to the Exclusion Area Boundary (EAB) is 1950 meters. The low population zone (LPZ) distance is 4827 meters. Offsite X/Qs are provided in Design Input.

For the control room X/Qs, the situation is more complex. Two sets of X/Qs are to be considered for the control room filtered intake, one based on a high estimate of intake flows and one based on a low estimate of intake flows. A third set of X/Qs is provided for unfiltered inleakage. These are all provided in the Design Input.

X/Qs referred to as Turbine Building X/Qs are used for the DW leakage through the main steam lines (either failed or intact), SGTS Release X/Qs are used for releases through the plant roofline vent (short stack), and finally, the SCN Bypass X/Qs are the average of the king-kong door and reactor building wall X/Qs, and are used for other-than-MSIV reactor building bypass leakages.

5.5 Discussion of Phenomenology

5.5.1 Source Term

The source term is the containment source term; i.e., the quantity, type, and timing of the release of radioactivity from a damaged reactor core to the containment as required by 10CFR100 and now 10CFR50.67. The Alternative Source Term originally described in NUREG-1465 is also detailed in RG 1.183 (Reference 3).

The first two release periods of Reference 3 are used for DBA-LOCAs, with a 120-second delay allowed for BWRs. Therefore, the gap release phase lasts from t = 120 seconds to t = 1920 seconds, and the early in-vessel release phase (sometimes referred to as the fuel release phase) lasts from t = 1920 seconds to t = 7320 seconds.

Per References 6 (Items 2.1, 2.3, and 2.4) and 3, the source term (in terms of release fractions and rates) is as follows:

Table 1 – Columbia Source Term

Release Time Frame	Fraction of Core Inventory Released (total* and per hour**)		
0 – 0.033 hours	No Release		
0.033 - 0.533 hours	Gases	Xe, Kr – 0.1/hr	0.05 total
		Elemental I – 4.9E-3/hr	2.4E-3 total
		Organic I – 1.5E-4/hr	7.5E-5 total
	Aerosols	I, Br – 0.095/hr	0.0475 total
		Cs, Rb – 0.1/hr	0.05 total
0.533 –2.033 hours	Gases	Xe, Kr – 0.63/hr	0.95 total
		Elemental I – 8.1E-3/hr	1.2E-2 total
		Organic I – 2.5E-4/hr	3.8E-4 total
	Aerosols	I, Br – 0.158/hr	0.2375 total
		Cs, Rb – 0.133/hr	0.2 total
		Te Group – 0.033/hr	0.05 total
		Ba, Sr – 0.013/hr	0.02 total
		Noble Metals – 1.7E-3/hr	2.5E-3 total
		La Group – 1.3E-4/hr	2E-4 total
		Ce Group – 3.3E-4/hr	5E-4 total

*Total releases from tables in Section 3.2 of Reference 5

**Per hour release = total/0.5 hours (0.033 - 0.533 hours) and total/1.5 hours (0.533 –2.033 hours)

5.5.2 Containment Spray

Per Reference 3, reduction in containment airborne activity by containment spray systems may be credited. The following discussion addresses this specific topic.

Timing for Spray Operation

Spray initiation is assumed to be called for 15 minutes into the event (see Design Input), due to a high radiation level in containment (assumed and confirmed in dose analysis) as well as for containment pressure control. Per Reference 9, Section 6.3.3.4 "System Performance During the Accident" operator action is not required during the short-term cooling period following the LOCA. During the long-term cooling period (after 10 minutes), the operator may take actions to:

a. Use ECCS for vessel level control,
b. Use ADS or SRVs for vessel pressure control, or
c. Place systems into operation, such as containment cooling, standby liquid control, or drywell spray.

An assumption to credit drywell spray initiation in 15 minutes is a conservative time duration relative to the FSAR analysis for ECCS system performance during a LOCA (which would allow operators to spray the drywell after 10 minutes since the radiation level in the drywell will exceed the threshold of 1.4E4 rads/hour (see Reference 6) only a few minutes after the start of the gap release). Regarding spray shut off, it is expected that after 24 hours, essentially all the activity that can be removed by the sprays will have been removed. Therefore, the sprays are assumed to be turned off at the end of the first day into the accident.

A review of Reference 6 indicates that the total initial gamma source strength of noble gas (i.e., 100% of the core inventory) is about 4E15 MeV/sec/MWt. For the 3556 MWt Columbia reactor, the total noble gas gamma source

strength at t = 0 would then be about 1.4E19 MeV/sec. Per Reference 4, this will be released at a rate of 5% over one-half hour (i.e., 2.8E-5 per second); thus, the gamma energy will appear in the containment atmosphere at a rate of about 4E14 MeV/sec^2.

The Columbia drywell has a volume of 200,540 ft^3. The amount of nitrogen in the drywell is, therefore, estimated to be (assuming 530 R in the drywell to conservatively maximize density):

N_2 density = 28 lbm/lb-mole x 14.7 lbf/in^2 x 144 in^2/ft^2 / 530 R / 1544 ft-lbf/lb-mole-R
= 0.0724 lbm/ft^3

N_2 mass = 200,540 ft^3 x density of nitrogen = 200,540 ft^3 x 0.0724 lbm/ft^3
= 1.45E4 lbm of nitrogen at the start of the accident
= 6.6E6 grams.

Since 1.4E4 rads/hour is equivalent to 1.4E6 ergs/gram/hour or 390 ergs/gram/sec, the total energy being absorbed in the drywell air corresponding to 1.4E4 rads/hour would be about 2.6E9 ergs per second or about 1.6E15 MeV/sec. Applying the finite source correction factor from Reference 3 ($1173/V^{0.338}$ with V in cubic feet), the gamma energy that would need to be generated in the Columbia drywell atmosphere in order to permit 1.6E15 MeV/sec to be absorbed would be approximately 3E16 MeV/sec. With the gamma energy generation rate increasing at 4E14 MeV/sec^2, it would require about 75 seconds for the gamma energy generation rate (due only to noble gas) to reach the level of 3E16 MeV/sec. With a delay of 120 seconds from the start of the accident to the start of the release, one can be confident that within 195 seconds (3.3 minutes) of the start of the accident, the gamma energy level in the drywell atmosphere would reach the rate of 1.4E4 rads/hour.

Aerosol Removal Rates

Guidance from both Revisions 1 and 2 of NUREG-0800, Section 6.5.2 (Reference 13) has been used in the calculation. From Reference 13, the expression for spray removal rate of particulate, λ_p, is given as:

$$\lambda_p = \frac{3}{2}\frac{hFE}{VD} \qquad \text{(Equation 1)}$$

where: h = spray fall height
F = spray flow rate
E = collection efficiency
V = volume being sprayed
D = spray droplet diameter

The SRP section suggests that E/D be set equal to 10 per meter initially (i.e., a one percent collection efficiency for a one mm droplet) and then reduced to 1.0 per meter when 98% of the mass has been removed.

Proprietary Information Removed

Consequently, per Equation 1, the initial DW spray removal rate amounts to 6.2/hr, then drops down to 0.62/hr when 98% of the activity has been removed from the DW. Confirmation of the timing of this reduction (occurring at 2.44 hours) is discussed in Section 5.6.5, and the spray lambda vs. time is shown on Table 2 below.

Table 2 – Aerosol DW Spray Removal Rates

Time Frame	DW Spray Removal Rate (1/hr)
0 – 0.25 hr	0
0.25 – 2.44 hr	6.20
2.44 – 24 hr	0.62
24 – 720 hr	0

Note that no credit for natural deposition in the drywell is taken, even when the sprays are not operating. Consequently, the aerosol removal rates from t = 0 to 0.25 hours are simply 0. No maximum DF is established for aerosol removal (as permitted by Reference 3), and there is no practical need to limit elemental iodine removal (since Revision 1 of Reference 13 establishes a minimum elemental iodine partition coefficient, H, of 300 as long as the pH is greater than approximately 7.3). A pH of 7.3 is the minimum post-release pH value from Reference 12 (reached after 30 days); and given a water-to-gas-phase volume ratio of 0.4 (suppression pool volume of 137,262 ft^3 divided by the sum of the drywell and wetwell gas volumes of 344,724 ft^3 – see Design Input), the corresponding DF would be 121 (see equation on page 6.5.2-11 of Revision 1 of Reference 13):

$$DF = 1 + H \times (\text{water-to-gas-phase volume ratio}) = 1 + 300(0.4) = 121$$

$$\text{water-to-gas phase volume ratio} = \frac{V_w}{V_{gas}} = \frac{137{,}262\,ft^3}{(200{,}540 + 144{,}184)\,ft^3} = 0.4$$

The limited amount of elemental iodine initially present (4.85%) means that once the DF is applied, the percentage of elemental iodine remaining airborne would be approximately 0.04% of the total release. This is only 27% of the organic iodine percentage; and therefore, this amount may be neglected (particularly because the pH reaches 7.3 only after 30 days when the dominant dose contributor I-131 has already been through 3.7 half-lives).

5.5.3 Natural Removal in Steam Lines

Since the main steam lines for Columbia are seismically qualified up to the turbine stop valves, it is assumed that the steam lines remain intact up to that point. However, as noted under Physical Description of the Plant, above, only the piping between the two MSIVs in three of the four main steam lines is actually credited for removal of activity. This is because of modeling uncertainties introduced by the unqualified status of the turbine stop valves.

The treatment of natural removal in the steam lines begins with the assumption that one steam line has failed catastrophically in the drywell very close to the inboard MSIV. This failure ultimately results in core damage and eliminates that portion of the line between the vessel and the inboard MSIV as a flowpath in which natural deposition can occur. Moreover, for this steam line it is assumed that the outboard MSIV fails to close, thus creating an unrestricted flowpath from the inboard MSIV to the point where the steam lines are assumed to release activity to the environment (i.e., at the turbine stop valves).

Even though natural deposition occurs in the intact steam lines between the vessel and the inboard MSIVs, it is not credited to avoid double crediting the removal via sprays and pipe deposition for the same particles.

Natural deposition efficiency is function of the flow rate through each intact steam line. The higher the flow, the lower the deposition. According to Section 5.3.4, the MSIV leakage from the drywell is 8.31 cfh per line. This volumetric flow rate is the one used for the DW-to-environment junction through the failed line, as this line is leaking directly to the environment.

As for the intact lines, it was chosen to model deposition as filters for which removal efficiencies are calculated according to the Reference 14 model for aerosol deposition and a modified "Bixler" approach (in which Reference 1 is used for the deposition velocity but Reference 14 is used for the "well-mixed" relationship between removal efficiency and lambda) for gaseous iodine removal. Therefore, since there is no control volume representing the gas space between the inboard and outboard MSIVs of these intact lines, leakage through the intact line is also from the drywell into the environment, but this time through a filter. This same volumetric flow of 8.31 cfh per line is then used for this junction as well. One must keep in mind, however, that the volumetric flow out of each intact steam line (should a control volume be modeled) would be greater than the inflow due to gas expansion in the space between the MSIVs where the pressure is different from both the upstream pressure in the drywell of 52.1 psia (37.4 psig) and the downstream pressure (atmospheric pressure in the environment). In fact, the conditions that would conservatively maximize the volumetric flow going out to the environment (i.e., in terms of minimizing the pressure between the MSIVs) would be to consider the gas flow incompressible.

For incompressible flow, the volumetric flow varies with the square-root of the pressure difference. Since the volumetric flow through both MSIVs must be the same, the gauge pressure in the space between the MSIVs must be 1/2 that of the drywell and the mass flowrate to the environment would be $1/\sqrt{2}$ that of a single MSIV (21 scfh reduced to 14.85 scfh). Then, assuming the density in the space between the MSIVs would also be 1/2 that of the drywell (i.e., making the further conservative assumption that the ratio of gauge pressures for the drywell and the space between the MSIVs may also be used to approximate the ratio of the absolute pressures), the volumetric flow out of the space between the MSIVs would be $\sqrt{2}$ that corresponding to the original 21 scfh in-flow (i.e., $1/\sqrt{2}$ the mass flowrate but one-half the density). Since the density in the drywell is assumed to be air at 52.1 psia and 283 F (743 R) or 0.19 lbm/ft^3, and one half this value is 0.095 lbm/ft^3, the conversion from the 14.85 scfh to actual cfh is simply:

$$\text{Flow between MSIVs} = 14.35 \text{ scfh } (0.075 \text{ lbm/ft}^3 \text{ (standard)}/0.095 \text{ lbm/ft}^3) = 11.7 \text{ cfh}$$

Consequently, the maximum volumetric flow going out of each of the three intact steam lines would reach 11.7 cfh, a conservative value that is actually used when calculating the deposition efficiencies in the lines (which appear as filter efficiencies). Note that this is the flow out of the space between the closed MSIVs, not out of the drywell. The leakage from the drywell remains 8.31 cfh per line.

The natural deposition models used for the three intact steam lines are taken from References 14 and 1. The deposition efficiencies are as follows:

AEB-98-03 Model for Aerosol Removal: (Reference 14, Appendix A)

Combining Equations 2, 3 and 4 of Appendix A of Reference 14, one obtains an expression of the equivalent filter efficiency for aerosol deposition such as:

$$\eta = 1 - \frac{1}{1 + \frac{u_s A}{Q}}$$

Where: u_s = settling velocity (m/s)
Q = volumetric flow rate into volume (m^3/s)
A = settling area = length of pipe x pipe diameter (m^2)

With: Q = 11.7 cfh (9.21e-5 m^3/s)
A = 41.25 ft^2 (3.83 m^2) [equivalent length of 20.63 ft, and 2 ft diameter]

To determine u_s, one must account for the impact of drywell sprays on the sedimentation velocity of the remaining particles (i.e., remaining after being sprayed).

Proprietary Information Removed

Proprietary Information Removed

Modified Bixler Model for Elemental Iodine Removal: (Reference 1, Equation 29 p. 212, as modified)

The following expression for elemental iodine deposition velocity, U_{ei}, has been taken from Supplement 2 to Reference 1.

$$U_{ei} = \exp\left(\frac{2809}{T} - 12.5\right)$$

Normally, in the Reference 1 Bixler model, the efficiency would be calculated from a plug flow expression. However, the AEB-98-03 well-mixed expression can be modified to produce a more conservative result for elemental iodine removal, as follows:

$$\eta = 1 - \frac{1}{1 + \frac{u_{ei} A_s}{100 Q}}$$

Where: U_{ei} = deposition velocity (cm/s)
Q = pipe gas flow (m^3/s)
A_s = total pipe surface area (m^2)
T = steam line wall temperature (K)

With: Q = 11.7 cfh (9.21e-5 m^3/s)
A_s = 129.6 ft^2 (12.0 m^2), and
T = 544 F (558 K) (see Design Input)

One obtains: η_{ei} = 0.427 with U_{ei} = 5.7E-4 cm/sec = 5.7E-6 m/sec

Modified Bixler Model for Organic Iodine Removal: (Reference 1, Equation 31 p. 213, as modified)

The following expression for organic iodine deposition velocity, U_{oi}, has been taken from Supplement 2 to Reference 1.

$$U_{oi} = \exp\left(\frac{2809}{T} - 19.3\right)$$

Normally, in the Reference 1 Bixler model, the efficiency would be calculated from a plug flow expression. However, the AEB-98-03 well-mixed expression can be modified to produce a more conservative result for organic iodine removal, as follows:

$$\eta = 1 - \frac{1}{1 + \frac{u_{oi} A_s}{100Q}}$$

Where: U_{oi} = deposition velocity (cm/s)
Q = pipe gas flow (m^3/s)
A_s = total pipe surface area (m^2)
T = steam line wall temperature (K)

With: Q = 11.7 cfh (9.21e-5 m^3/s)
A_s = 129.6 ft^2 (12.0 m^2), and
T = 544 F (558 K) (see Design Input)

One obtains: η_{oi} = 0.001 with U_{oi} = 6.4E-7 cm/sec = 6.4E-9 m/sec

5.6 Dose Calculation with STARDOSE

The dose calculation model consists of six control volumes representing the damaged core and reactor cooling system (CORE), the drywell portion of the primary containment (DW), the wetwell portion of the primary containment (WW), the suppression pool (SP), the reactor building or secondary containment (RB), and finally, the control room (CR). These control volumes are arranged as shown on Figure 1 with the various junctions that connect them. These junctions are associated with volumetric flows which determine the rate at which radioactivity is exchanged between the control volumes. In addition, removal processes such as sedimentation in pipes and filtration are modeled within and between the control volumes, as appropriate.

5.6.1 Core-Related Junctions

The core junctions affect the release of radioactivity to the drywell (1) and to the suppression pool (2) in parallel. That's why there are actually two similar SP volumes shown on Figure 1, one being used only for ESF leakage iodine release considerations (SP_{esf}). The drywell and suppression pool releases are an example of conservative "double-counting" in that the same radioactivity is assumed to be in both places at the same time. In fact, the release of radioactivity to the suppression pool is assumed in the analysis to be complete within the first two hours of the accident, even though it actually takes several hours for the sprays and other mechanisms to remove the radioactivity from the containment atmosphere and get it into the water of the suppression pool.

Note that there is twice as much iodine activity transferred to the SP than what is transferred to the DW. Indeed elemental and organic iodine species only account for 5% of the core iodine inventory. Therefore, in order to get 10% of the core inventory of iodine into the SP control volume in the correct chemical form, the release of the 5% elemental and organic iodine had to be doubled. The particulate iodine is then filtered out with an "imaginary" filter in the SP-to-RB junction (3). In addition, an imaginary 50% efficient filter for noble gas is used between the suppression pool and the reactor building so as to limit the noble gas release to that corresponding to 30% of the core inventory of iodine rather than 60%.

5.6.2 Containment Transport and Environmental Release-Related Junctions

Referring to Figure 1, these junctions are:

- Drywell-to-wetwell mixing flow rate (4) of one wetwell volume per minute (to ensure well-mixed conditions), effective after the end of the release phase (i.e., after 2.033 hours),
- Containment leakage of 0.50% of the drywell and wetwell volumes per day (Junctions 5 & 6) collected into the RB after drawdown (20 minutes) but directly released to the environment before that,
- SGTS exhaust flow, via plant vent (7) at a rate of 5000 cfm, (the filter efficiency after drawdown is assumed to be 99% with 50 cfm of filter bypass which reduces the efficiency to 98%),
- Secondary containment bypass pathways such as leakage through one failed steam line (8) at a rate of 8.31 cfh, leakage through three intact steam lines (9) where deposition phenomena are modeled, and other RB bypass (10), corresponding to 0.04% of the containment volume per day.

5.6.3 Control Room-Related Junctions

Control room junctions (Figure 1) exist to take activity out of the environment (after it has been diluted by the appropriate X/Q) and bring it into the control room. For the licensing basis case, one CREF train is assumed to fail leaving one train to operate indefinitely. Therefore, the filtered flow (Junction 11 with a filter efficiency of 95% for the gaseous iodine species, 99% for the particulates) is assumed to be 800 cfm min or 900 cfm max for this case with an unfiltered inleakage (Junction 12) of 50 cfm. Different X/Qs are applied to these two inflows as previously explained. Since the min flow creates the highest control room dose, this case has been identified as the licensing basis.

The combined flows are released from the control room back into the environment via Junction 13 at a total flow rate of 850 cfm min or 950 cfm max.

Two cases are also presented in which both CREF trains are assumed to start as designed. In one of these cases, the control room operator is assumed to secure one of the two trains not earlier than eight hours after the start of the activity release. In the other of these cases, both trains are assumed to operate indefinitely. Minimum two-train intake flow of 1300 cfm min and an unfiltered inleakage of 75 cfm are used for these cases. During two-train operation, the flow leaving the control room is 1375 cfm (min value).

5.6.4 Calculation

The STARDOSE computer code (Reference 4) is used for the control room and offsite dose calculations. Two different input files are needed to run this code:

- The INPUT.DAT file is the model file that represents the control volumes and junctions as presented on Figure 1.
- The LIBFILE1.TXT file is a library file, which contains all the radionuclide input data: isotope names (column 1), parent and daughter isotopes (column 2 and 3), core inventory (column 5), isotope decay constants (column 6), and dose conversion factors. The radionuclides considered are those from Reference 7 (except the cobalt isotopes which are not significant) plus additional Kr and Xe isotopes, in particular those included in Reference 8 (see Assumption 1). Core inventories per MWt are from the Design Input section. Dose conversion factors are taken from the default FGR11&12 file (found in Reference 1 to reflect Reference 2) for CEDE doses inhaled (column 12) and whole body exposure (column 8). Radioactive decay rates are from Reference 16.

The first case analyzed is one with an assumed failure of one CREF train to start. This case (with minimum control room air intake flow) is the licensing-basis case.

A second case analyzed (with minimum control room air intake flow) is one involving normal, two-train operation of CREF. At eight hours, one train of CREF is assumed to be secured, and the control room air intake flow is reduced from 1300 cfm to 800 cfm with the unfiltered inleakage also being reduced from 75 cfm to 50 cfm. A third case analyzed assumes indefinite operation of both CREF trains.

Both minimum and maximum control room air intake flow rate cases were run to determine the most limiting condition. The case with the assumed CREF failure was selected to make this comparison. The minimum case is limiting.

For each of the four control room air intake rate cases in this dose calculation, two STARDOSE runs with two different INPUT.DAT files but one common LIBFILE1.TXT file were necessary, due to the difference of X/Qs between the CR intake and the CR unfiltered inleakage. These eight main input files are shown in Appendix A, whereas the LIBFILE1.TXT file is reproduced in Appendix B. The CR dose for each case was obtained by adding up the CR TEDE of the "intake" run (CR unfiltered inleakage turned off) to the CR TEDE dose of the "inleakage" run (CR intake volumetric flow turned off). Note that TEDE equals CEDE plus Whole Body ("Effective Cloudshine") dose. STARDOSE outputs provide CEDE and Whole Body doses, not TEDE.

The offsite doses are calculated by STARDOSE along with the CR doses for each run. As the offsite X/Qs were not modified when running two CR combined cases, the offsite dose results are identical.

To summarize, the major assumptions implemented in the INPUT.DAT file for all cases are as follows:

- No credit for MSIV-LCS,
- Credit for spray removal in the drywell (SRP model), recognizing spray droplet impingement in a somewhat congested drywell,
- No credit for natural deposition in containment,
- 0.50%/day containment leakage,
- 16 scfh of MSIV leakage, credit for aerosol and iodine deposition in three intact steam lines between the inboard and outboard MSIVs, one line being assumed to leak directly into the environment,
- 0.04%/day of containment volume bypassing the reactor building,
- 1 gpm of ESF leakage analyzed as 2 gpm, with 10% iodine release fraction,
- Secondary containment drawdown time of 20 minutes,
- 5000 cfm through the SGTS, with 50 cfm bypassing the filters,
- No credit for holdup in the secondary containment,
- Control room air intake filters: 95% efficient for gaseous iodine, 99% for particulates.

For the licensing-basis case, the control room air intake flow is 800 cfm and the unfiltered inleakage is 50 cfm.

5.6.5 STARDOSE Results

Control room and LPZ dose results are shown in Appendix C, while calculation of the maximum 2-hour EAB dose is detailed in Appendix D. Appendix E confirms the time at which the Reference 13 reduction in spray aerosol removal rate (from 6.2/hr down to 0.62/hr) occurs. This confirmation is based on the moment when the airborne fraction of Cs-137, a long-live isotope, is reduced to 2% of its released inventory.

Tables 4 and 5 below present the control room and offsite doses for Columbia, respectively.

Table 4 – CR Dose Results (rem)

	30-day WB*	30-day CEDE	30-day TEDE
Single-train operation for 30 days, minimum flow	0.44	3.01	3.44
Single-train operation for 30 days, maximum flow	0.42	2.72	3.14
Two-train operation for 8 hours	0.44	2.97	3.41
Two-train operation for 30 days	0.41	2.80	3.21

*"Effective Cloudshine" from Reference 1

Table 5 –Offsite Dose Results (rem)

	WB*	CEDE	TEDE
EAB (2 hour)**	2.26	1.77	4.04
LPZ (30 day)	2.74	1.11	3.85

*"Effective Cloudshine" from Reference 1

** The EAB dose represents the highest dose over a 2-hour period post-accident

Sensitivity information is included in Attachments 2 and 3. In Attachment 2, it is shown that the dose due to liquid bypass leakage (via the CST) is negligible (about +0.9% in the control room); and in Attachment 3, it is shown that the control room dose due to shine from the control room filters is negligible (about +1.0%). In Reference 17, the control room shine dose from the reactor building, from the primary containment, and from the plume outside the control room are all shown to be negligible.

5.7 Dose Calculation with RADTRAD

Refer to Appendix F for a confirmatory licensing-basis case analyzed with RADTRAD.

5.8 Conclusions

CR Dose Results - The conclusion from the results of the STARDOSE analysis is that the DBA-LOCA CR dose is below the 5.0 rem TEDE regulatory limit for control room operator exposure given in Reference 3 for DBA-LOCA.

Offsite Doses Results - The conclusion from the results of the STARDOSE analysis is that the DBA-LOCA offsite doses are well below the 25 rem TEDE regulatory limit from Reference 3 for DBA-LOCA.

Control Room Filtered Intake Case, Min Intake, 2 Trains CREF Indefinitely:

```
edit_time
0.0 0.25 0.5 0.75 1.0 1.25 1.5 1.75 2.0 2.25 2.5 2.75 3.0 3.25 3.5 3.75 4.0 8.0 24.0 48.0 96.0 240.0 720.0
end_edit_time

participating_isotopes
Kr83m   Kr85m   Kr85    Kr87    Kr88    Kr89
Xe131m  Xe133m  Xe133   Xe135m  Xe135   Xe137   Xe138
I131Org I131Elem        I131Part
I132Org I132Elem        I132Part
I133Org I133Elem        I133Part
I134Org I134Elem        I134Part
I135Org I135Elem        I135Part
Rb86    Cs134   Cs136   Cs137
Sb127   Sb129   Te127m  Te127   Te129m  Te129   Te131m  Te132
Ba137m  Ba139   Ba140
Mo99    Tc99m   Ru103   Ru105   Ru106   Rh105
Y90     Y91     Y92     Y93     Zr95    Zr97    Nb95
La140   La141   La142   Pr143   Nd147   Am241   Cm242   Cm244
Ce141   Ce143   Ce144   Np239   Pu238   Pu239   Pu240   Pu241
Sr89    Sr90    Sr91    Sr92
end_participating_isotopes

core
thermal_power                   3556
elemental_iodine_frac           0.0485
organic_iodine_frac             0.0015
particulate_iodine_frac                 0.95
release_frac
to_control_volume DW
Time N_Gas I_Grp CsGrp TeGrp BaGrp NMtls CeGrp LaGrp SrGrp
0.033   0       0       0       0       0       0       0       0       0
0.533   0.1     0.1     0.1     0       0       0       0       0       0
2.033   0.633   0.167   0.133   0.033   0.0133  0.00167 0.00033 0.00013 0.0133
720     0       0       0       0       0       0       0       0       0
end_to_control_volume
to_control_volume SP
Time N_Gas I_Grp CsGrp TeGrp BaGrp NMtls CeGrp LaGrp SrGrp
0.033   0       0       0       0       0       0       0       0       0
0.533   0       0.2     0       0       0       0       0       0       0
2.033   0       0.334   0       0       0       0       0       0       0
720     0       0       0       0       0       0       0       0       0
end_to_control_volume
end_release_frac
end_core

control_volume
obj_type                                OBJ_CV
name                                    DW
air_volume                              2.0054e+005
water_volume                    0
surface_area                    1
has_recirc_filter                       false
removal_rate_to_surface
Time    NobleGas        ElemIodine      OrgIodine       PartIodine      Solubles        Insolubles
0.25    0.00    0.001   0.00    0.001   0.001   0.001
2.44    0.00    6.20    0.00    6.20    6.20    6.20
24.00   0.00    0.62    0.00    0.62    0.62    0.62
720.0   0.00    0.00    0.00    0.00    0.00    0.00
end_removal_rate_to_surface
frac_4_daughter_resusp_from_surface
Time    NobleGas        ElemIodine      OrgIodine       PartIodine      Solubles        Insolubles
720     1       0       0       0       0
end_frac_4_daughter_resusp_from_surface
end_control_volume
```

```
control_volume
obj_type                                OBJ_CV
name                                    WW
air_volume                              1.442e+005
water_volume                            1.373e+005
surface_area                            0
has_recirc_filter                       false
removal_rate_to_waterpool
Time    NobleGas        ElemIodine      OrgIodine       PartIodine      Solubles        Insolubles
720     0       0       0       0       0       0
end_removal_rate_to_waterpool
frac_4_daughter_resusp_from_water
Time    NobleGas        ElemIodine      OrgIodine       PartIodine      Solubles        Insolubles
720     0       0       0       0       0       0
end_frac_4_daughter_resusp_from_water
decontamination_factor
Time    NobleGas        ElemIodine      OrgIodine       PartIodine      Solubles        Insolubles
720     1       1       1       1       1       1
end_decontamination_factor
end_control_volume

control_volume
obj_type                                OBJ_CV
name                                    RB
air_volume                              5000
water_volume                            0
surface_area                            0
has_recirc_filter                       false
end_control_volume

control_volume
obj_type                                OBJ_CV
name                                    SP
air_volume                              1.373e+005
water_volume                            0
surface_area                            0
has_recirc_filter                       false
end_control_volume

control_volume
obj_type                                OBJ_CR
name                                    Control_Room
air_volume                              2.14e+005
water_volume                            0
surface_area                            0
has_recirc_filter                       false
breathing_rate
Time    (hr)    Value   (cms)
720             0.00035
end_breathing_rate
occupancy_factor
Time    (hr)    Value   (frac)
24              1
96              0.6
720             0.4
end_occupancy_factor
end_control_volume

junction
junction_type                   AIR_JUNCTION
downstream_location             AIR_SPACE
upstream                                CORE
downstream                              DW
has_filter                              false
flow_rate
Time    (hr)    Value   (cfm)
720             1
end_flow_rate
end_junction
```

```
junction
junction_type                   AIR_JUNCTION
downstream_location             AIR_SPACE
upstream                                CORE
downstream                              SP
has_filter                              false
flow_rate
Time    (hr)    Value   (cfm)
720             1
end_flow_rate
end_junction

junction
junction_type                   AIR_JUNCTION
downstream_location             WATER_POOL
upstream                                DW
downstream                              WW
has_filter                              false
flow_rate
Time    (hr)    Value   (cfm)
2.033           0
720             1.442e5
end_flow_rate
end_junction

junction
junction_type                   AIR_JUNCTION
downstream_location             AIR_SPACE
upstream                                WW
downstream                              DW
has_filter                              false
flow_rate
Time    (hr)    Value   (cfm)
2.033           0
720             1.442e5
end_flow_rate
end_junction

junction
junction_type                   AIR_JUNCTION
downstream_location             AIR_SPACE
upstream                                DW
downstream                              environment
has_filter                              false
flow_rate
Time    (hr)    Value   (cfm)
24      0.1384
720     0.0692
end_flow_rate
X_over_Q_4_ctrl_room
Time    (hr)    Value   (s/m*3)
2       5.42E-04
8       2.31E-04
24      1.19E-04
96      9.24E-05
720     8.87E-05
end_X_over_Q_4_ctrl_room
X_over_Q_4_site_boundary
Time    (hr)    Value   (s/m*3)
720     1.81e-4
end_X_over_Q_4_site_boundary
X_over_Q_4_low_population_zone
Time    (hr)    Value   (s/m*3)
8       4.95e-5
24      3.69e-5
96      1.95e-5
720     7.81e-6
end_X_over_Q_4_low_population_zone
end_junction
```

```
junction
junction_type                   AIR_JUNCTION
downstream_location             AIR_SPACE
upstream                                DW
downstream                              environment
has_filter                              true
flow_rate
Time    (hr)    Value   (cfm)
24      0.4152
720     0.2076
end_flow_rate
filter_efficiency
Time    NobleGas        ElemIodine      OrgIodine       PartIodine      Solubles        Insolubles
720     0               0.427           0.001           0.897           0.897           0.897
end_filter_efficiency
frac_4_daughter_resusp
Time    NobleGas        ElemIodine      OrgIodine       PartIodine      Solubles        Insolubles
720     1       0       0       0       0       0
end_frac_4_daughter_resusp
X_over_Q_4_ctrl_room
Time    (hr)    Value   (s/m*3)
2       5.42E-04
8       2.31E-04
24      1.19E-04
96      9.24E-05
720     8.87E-05
end_X_over_Q_4_ctrl_room
X_over_Q_4_site_boundary
Time    (hr)    Value   (s/m*3)
720     1.81e-4
end_X_over_Q_4_site_boundary
X_over_Q_4_low_population_zone
Time    (hr)    Value   (s/m*3)
8       4.95e-5
24      3.69e-5
96      1.95e-5
720     7.81e-6
end_X_over_Q_4_low_population_zone
end_junction

junction
junction_type                   AIR_JUNCTION
downstream_location             AIR_SPACE
upstream                                DW
downstream                              RB
has_filter                              false
flow_rate
Time    (hr)    Value   (cfm)
0.333           0
24              0.696
720             0.348
end_flow_rate
end_junction

junction
junction_type                   AIR_JUNCTION
downstream_location             AIR_SPACE
upstream                                WW
downstream                              RB
has_filter                              false
flow_rate
Time (hr) Value (cfm)
0.333           0
24              0.5
720             0.25
end_flow_rate
end_junction
```

```
junction
junction_type                   AIR_JUNCTION
downstream_location             AIR_SPACE
upstream                                DW
downstream                              environment
has_filter                              false
flow_rate
Time    (hr)    Value   (cfm)
0.333           0.752
24              0.056
720             0.028
end_flow_rate
X_over_Q_4_ctrl_room
Time    (hr)    Value   (s/m*3)
2       3.08E-04
8       2.36E-04
24      9.52E-05
96      8.07E-05
720     6.97E-05
end_X_over_Q_4_ctrl_room
X_over_Q_4_site_boundary
Time    (hr)    Value   (s/m*3)
720     1.81e-4
end_X_over_Q_4_site_boundary
X_over_Q_4_low_population_zone
Time    (hr)    Value   (s/m*3)
8       4.95e-5
24      3.69e-5
96      1.95e-5
720     7.81e-6
end_X_over_Q_4_low_population_zone
end_junction

junction
junction_type                   AIR_JUNCTION
downstream_location             AIR_SPACE
upstream                                WW
downstream                              environment
has_filter                              false
flow_rate
Time (hr) Value (cfm)
0.333           0.541
24              0.04
720             0.02
end_flow_rate
X_over_Q_4_ctrl_room
Time    (hr)    Value   (s/m*3)
2       3.08E-04
8       2.36E-04
24      9.52E-05
96      8.07E-05
720     6.97E-05
end_X_over_Q_4_ctrl_room
X_over_Q_4_site_boundary
Time    (hr)    Value   (s/m*3)
720     1.81e-4
end_X_over_Q_4_site_boundary
X_over_Q_4_low_population_zone
Time    (hr)    Value   (s/m*3)
8       4.95e-5
24      3.69e-5
96      1.95e-5
720     7.81e-6
end_X_over_Q_4_low_population_zone
end_junction

junction
junction_type                   AIR_JUNCTION
downstream_location             AIR_SPACE
upstream                                SP
```

```
downstream                              RB
has_filter                              true
flow_rate
Time    (hr)    Value   (cfm)
0.25    0
720     0.268
end_flow_rate
filter_efficiency
Time    NobleGas        ElemIodine      OrgIodine       PartIodine      Solubles        Insolubles
720     0.5     0       0       0.99999 0       0
end_filter_efficiency
end_junction

junction
junction_type                   AIR_JUNCTION
downstream_location             AIR_SPACE
upstream                                RB
downstream                              environment
has_filter                              true
flow_rate
Time    (hr)    Value   (cfm)
720     5000
end_flow_rate
filter_efficiency
Time    NobleGas        ElemIodine      OrgIodine       PartIodine      Solubles        Insolubles
0.333   0       0       0       0       0       0
720     0       0.98    0.98    0.98    0.98    0.98
end_filter_efficiency
frac_4_daughter_resusp
Time    NobleGas        ElemIodine      OrgIodine       PartIodine      Solubles        Insolubles
720     1       1       0       0       0       0
end_frac_4_daughter_resusp
X_over_Q_4_ctrl_room
Time    (hr)    Value   (s/m*3)
0.333   3.08E-4
2       1.56E-04
8       1.15E-04
24      4.51E-05
96      3.83E-05
720     3.30E-05
end_X_over_Q_4_ctrl_room
X_over_Q_4_site_boundary
Time    (hr)    Value   (s/m*3)
720     1.81e-4
end_X_over_Q_4_site_boundary
X_over_Q_4_low_population_zone
Time    (hr)    Value   (s/m*3)
8       4.95e-5
24      3.69e-5
96      1.95e-5
720     7.81e-6
end_X_over_Q_4_low_population_zone
end_junction

junction
junction_type                   AIR_JUNCTION
downstream_location             AIR_SPACE
upstream                                environment
downstream                              Control_Room
has_filter                              true
flow_rate
Time    (hr)    Value   (cfm)
720     1300
end_flow_rate
filter_efficiency
Time    NobleGas        ElemIodine      OrgIodine       PartIodine      Solubles        Insolubles
720     0       0.95    0.95    0.99    0.99    0.99
end_filter_efficiency
frac_4_daughter_resusp
Time    NobleGas        ElemIodine      OrgIodine       PartIodine      Solubles        Insolubles
```

```
720     1       1       0       0       0       0
end_frac_4_daughter_resusp
end_junction

junction
junction_type                   AIR_JUNCTION
downstream_location             AIR_SPACE
upstream                                Control_Room
downstream                              environment
has_filter                              false
flow_rate
Time    (hr)    Value   (cfm)
720     1375
end_flow_rate
X_over_Q_4_ctrl_room
Time    (hr)    Value   (s/m*3)
720     0
end_X_over_Q_4_ctrl_room
X_over_Q_4_site_boundary
Time    (hr)    Value   (s/m*3)
720     0
end_X_over_Q_4_site_boundary
X_over_Q_4_low_population_zone
Time    (hr)    Value   (s/m*3)
720     0
end_X_over_Q_4_low_population_zone
end_junction

environment
breathing_rate_sb
Time (hr)       Value (cms)
8       0.00035
720     0.0
end_breathing_rate_sb
breathing_rate_lpz
Time (hr)       Value (cms)
8       0.00035
24      0.00018
720     0.00023
end_breathing_rate_lpz
end_environment
```

Control Room Unfiltered Inleakage Case, Min Intake, 2 Trains CREF Indefinitely:

```
edit_time
0.0 0.25 0.5 0.75 1.0 1.25 1.5 1.75 2.0 2.25 2.5 2.75 3.0 3.25 3.5 3.75 4.0 8.0 24.0 48.0 96.0 240.0 720.0
end_edit_time

participating_isotopes
Kr83m   Kr85m   Kr85    Kr87    Kr88    Kr89
Xe131m  Xe133m  Xe133   Xe135m  Xe135   Xe137   Xe138
I131Org I131Elem        I131Part
I132Org I132Elem        I132Part
I133Org I133Elem        I133Part
I134Org I134Elem        I134Part
I135Org I135Elem        I135Part
Rb86    Cs134   Cs136   Cs137
Sb127   Sb129   Te127m  Te127   Te129m  Te129   Te131m  Te132
Ba137m  Ba139   Ba140
Mo99    Tc99m   Ru103   Ru105   Ru106   Rh105
Y90     Y91     Y92     Y93     Zr95    Zr97    Nb95
La140   La141   La142   Pr143   Nd147   Am241   Cm242   Cm244
Ce141   Ce143   Ce144   Np239   Pu238   Pu239   Pu240   Pu241
Sr89    Sr90    Sr91    Sr92
end_participating_isotopes

core
thermal_power                   3556
elemental_iodine_frac           0.0485
organic_iodine_frac             0.0015
particulate_iodine_frac                 0.95
release_frac
to_control_volume DW
Time N_Gas I_Grp CsGrp TeGrp BaGrp NMtls CeGrp LaGrp SrGrp
0.033   0       0       0       0       0       0       0       0       0
0.533   0.1     0.1     0.1     0       0       0       0       0       0
2.033   0.633   0.167   0.133   0.033   0.0133  0.00167 0.00033 0.00013 0.0133
720     0       0       0       0       0       0       0       0       0
end_to_control_volume
to_control_volume SP
Time N_Gas I_Grp CsGrp TeGrp BaGrp NMtls CeGrp LaGrp SrGrp
0.033   0       0       0       0       0       0       0       0       0
0.533   0       0.2     0       0       0       0       0       0       0
2.033   0       0.334   0       0       0       0       0       0       0
720     0       0       0       0       0       0       0       0       0
end_to_control_volume
end_release_frac
end_core

control_volume
obj_type                                OBJ_CV
name                                    DW
air_volume                              2.0054e+005
water_volume                    0
surface_area                    1
has_recirc_filter                       false
removal_rate_to_surface
Time    NobleGas        ElemIodine      OrgIodine       PartIodine      Solubles        Insolubles
0.25    0.00    0.001   0.00    0.001   0.001   0.001
2.44    0.00    6.20    0.00    6.20    6.20    6.20
24.00   0.00    0.62    0.00    0.62    0.62    0.62
720.0   0.00    0.00    0.00    0.00    0.00    0.00
end_removal_rate_to_surface
frac_4_daughter_resusp_from_surface
Time    NobleGas        ElemIodine      OrgIodine       PartIodine      Solubles        Insolubles
720     1       0       0       0       0
end_frac_4_daughter_resusp_from_surface
end_control_volume

control_volume
obj_type                                OBJ_CV
name                                    WW
```

```
air_volume                              1.442e+005
water_volume                            1.373e+005
surface_area                            0
has_recirc_filter                       false
removal_rate_to_waterpool
Time    NobleGas        ElemIodine      OrgIodine       PartIodine      Solubles        Insolubles
720     0       0       0       0       0       0
end_removal_rate_to_waterpool
frac_4_daughter_resusp_from_water
Time    NobleGas        ElemIodine      OrgIodine       PartIodine      Solubles        Insolubles
720     0       0       0       0       0       0
end_frac_4_daughter_resusp_from_water
decontamination_factor
Time    NobleGas        ElemIodine      OrgIodine       PartIodine      Solubles        Insolubles
720     1       1       1       1       1       1
end_decontamination_factor
end_control_volume

control_volume
obj_type                                OBJ_CV
name                                    RB
air_volume                              5000
water_volume                            0
surface_area                            0
has_recirc_filter                       false
end_control_volume

control_volume
obj_type                                OBJ_CV
name                                    SP
air_volume                              1.373e+005
water_volume                            0
surface_area                            0
has_recirc_filter                       false
end_control_volume

control_volume
obj_type                                OBJ_CR
name                                    Control_Room
air_volume                              2.14e+005
water_volume                            0
surface_area                            0
has_recirc_filter                       false
breathing_rate
Time    (hr)    Value   (cms)
720             0.00035
end_breathing_rate
occupancy_factor
Time    (hr)    Value   (frac)
24              1
96              0.6
720             0.4
end_occupancy_factor
end_control_volume

junction
junction_type                   AIR_JUNCTION
downstream_location             AIR_SPACE
upstream                                CORE
downstream                              DW
has_filter                              false
flow_rate
Time    (hr)    Value   (cfm)
720             1
end_flow_rate
end_junction

junction
junction_type                   AIR_JUNCTION
downstream_location             AIR_SPACE
```

```
upstream                                CORE
downstream                              SP
has_filter                              false
flow_rate
Time    (hr)    Value   (cfm)
720             1
end_flow_rate
end_junction

junction
junction_type                   AIR_JUNCTION
downstream_location             WATER_POOL
upstream                                DW
downstream                              WW
has_filter                              false
flow_rate
Time    (hr)    Value   (cfm)
2.033           0
720             1.442e5
end_flow_rate
end_junction

junction
junction_type                   AIR_JUNCTION
downstream_location             AIR_SPACE
upstream                                WW
downstream                              DW
has_filter                              false
flow_rate
Time    (hr)    Value   (cfm)
2.033           0
720             1.442e5
end_flow_rate
end_junction

junction
junction_type                   AIR_JUNCTION
downstream_location             AIR_SPACE
upstream                                DW
downstream                              environment
has_filter                              false
flow_rate
Time    (hr)    Value   (cfm)
24      0.1384
720     0.0692
end_flow_rate
X_over_Q_4_ctrl_room
Time    (hr)    Value   (s/m*3)
2       4.70e-3
8       2.00e-3
24      1.03e-3
96      8.01e-4
720     7.69e-4
end_X_over_Q_4_ctrl_room
X_over_Q_4_site_boundary
Time    (hr)    Value   (s/m*3)
720     1.81e-4
end_X_over_Q_4_site_boundary
X_over_Q_4_low_population_zone
Time    (hr)    Value   (s/m*3)
8       4.95e-5
24      3.69e-5
96      1.95e-5
720     7.81e-6
end_X_over_Q_4_low_population_zone
end_junction

junction
junction_type                   AIR_JUNCTION
downstream_location             AIR_SPACE
```

```
upstream                                DW
downstream                              environment
has_filter                              true
flow_rate
Time    (hr)    Value   (cfm)
24      0.4152
720     0.2076
end_flow_rate
filter_efficiency
Time    NobleGas        ElemIodine      OrgIodine       PartIodine      Solubles        Insolubles
720     0               0.427           0.001           0.897           0.897           0.897
end_filter_efficiency
frac_4_daughter_resusp
Time    NobleGas        ElemIodine      OrgIodine       PartIodine      Solubles        Insolubles
720     1       0       0       0       0       0
end_frac_4_daughter_resusp
X_over_Q_4_ctrl_room
Time    (hr)    Value   (s/m*3)
2       4.70e-3
8       2.00e-3
24      1.03e-3
96      8.01e-4
720     7.69e-4
end_X_over_Q_4_ctrl_room
X_over_Q_4_site_boundary
Time    (hr)    Value   (s/m*3)
720     1.81e-4
end_X_over_Q_4_site_boundary
X_over_Q_4_low_population_zone
Time    (hr)    Value   (s/m*3)
8       4.95e-5
24      3.69e-5
96      1.95e-5
720     7.81e-6
end_X_over_Q_4_low_population_zone
end_junction

junction
junction_type                   AIR_JUNCTION
downstream_location             AIR_SPACE
upstream                                DW
downstream                              RB
has_filter                              false
flow_rate
Time    (hr)    Value   (cfm)
0.333           0
24              0.696
720             0.348
end_flow_rate
end_junction

junction
junction_type                   AIR_JUNCTION
downstream_location             AIR_SPACE
upstream                                WW
downstream                              RB
has_filter                              false
flow_rate
Time (hr) Value (cfm)
0.333           0
24              0.5
720             0.25
end_flow_rate
end_junction

junction
junction_type                   AIR_JUNCTION
downstream_location             AIR_SPACE
upstream                                DW
downstream                              environment
```

```
has_filter                              false
flow_rate
Time    (hr)    Value   (cfm)
0.333           0.752
24              0.056
720             0.028
end_flow_rate
X_over_Q_4_ctrl_room
Time    (hr)    Value   (s/m*3)
2       7.02E-4
8       3.19E-4
24      1.30E-4
96      1.05E-4
720     9.00E-5
end_X_over_Q_4_ctrl_room
X_over_Q_4_site_boundary
Time    (hr)    Value   (s/m*3)
720     1.81e-4
end_X_over_Q_4_site_boundary
X_over_Q_4_low_population_zone
Time    (hr)    Value   (s/m*3)
8       4.95e-5
24      3.69e-5
96      1.95e-5
720     7.81e-6
end_X_over_Q_4_low_population_zone
end_junction

junction
junction_type                   AIR_JUNCTION
downstream_location             AIR_SPACE
upstream                                WW
downstream                              environment
has_filter                              false
flow_rate
Time (hr) Value (cfm)
0.333           0.541
24              0.04
720             0.02
end_flow_rate
X_over_Q_4_ctrl_room
Time    (hr)    Value   (s/m*3)
2       7.02E-4
8       3.19E-4
24      1.30E-4
96      1.05E-4
720     9.00E-5
end_X_over_Q_4_ctrl_room
X_over_Q_4_site_boundary
Time    (hr)    Value   (s/m*3)
720     1.81e-4
end_X_over_Q_4_site_boundary
X_over_Q_4_low_population_zone
Time    (hr)    Value   (s/m*3)
8       4.95e-5
24      3.69e-5
96      1.95e-5
720     7.81e-6
end_X_over_Q_4_low_population_zone
end_junction

junction
junction_type                   AIR_JUNCTION
downstream_location             AIR_SPACE
upstream                                SP
downstream                              RB
has_filter                              true
flow_rate
Time    (hr)    Value   (cfm)
0.25    0
```

```
720     0.268
end_flow_rate
filter_efficiency
Time    NobleGas        ElemIodine      OrgIodine       PartIodine      Solubles        Insolubles
720     0.5     0       0       0.99999 0       0
end_filter_efficiency
end_junction

junction
junction_type                   AIR_JUNCTION
downstream_location             AIR_SPACE
upstream                                RB
downstream                              environment
has_filter                              true
flow_rate
Time    (hr)    Value   (cfm)
720     5000
end_flow_rate
filter_efficiency
Time    NobleGas        ElemIodine      OrgIodine       PartIodine      Solubles        Insolubles
0.333   0       0       0       0       0       0
720     0       0.98    0.98    0.98    0.98    0.98
end_filter_efficiency
frac_4_daughter_resusp
Time    NobleGas        ElemIodine      OrgIodine       PartIodine      Solubles        Insolubles
720     1       1       0       0       0       0
end_frac_4_daughter_resusp
X_over_Q_4_ctrl_room
Time    (hr)    Value   (s/m*3)
0.333   7.02E-4
2       6.95E-4
8       3.36E-4
24      1.28E-4
96      9.72E-5
720     7.69E-5
end_X_over_Q_4_ctrl_room
X_over_Q_4_site_boundary
Time    (hr)    Value   (s/m*3)
720     1.81e-4
end_X_over_Q_4_site_boundary
X_over_Q_4_low_population_zone
Time    (hr)    Value   (s/m*3)
8       4.95e-5
24      3.69e-5
96      1.95e-5
720     7.81e-6
end_X_over_Q_4_low_population_zone
end_junction

junction
junction_type                   AIR_JUNCTION
downstream_location             AIR_SPACE
upstream                                environment
downstream                              Control_Room
has_filter                              false
flow_rate
Time    (hr)    Value   (cfm)
720     75
end_flow_rate
end_junction

junction
junction_type                   AIR_JUNCTION
downstream_location             AIR_SPACE
upstream                                Control_Room
downstream                              environment
has_filter                              false
flow_rate
Time    (hr)    Value   (cfm)
720     1375
```

```
end_flow_rate
X_over_Q_4_ctrl_room
Time    (hr)    Value   (s/m*3)
720     0
end_X_over_Q_4_ctrl_room
X_over_Q_4_site_boundary
Time    (hr)    Value   (s/m*3)
720     0
end_X_over_Q_4_site_boundary
X_over_Q_4_low_population_zone
Time    (hr)    Value   (s/m*3)
720     0
end_X_over_Q_4_low_population_zone
end_junction

environment
breathing_rate_sb
Time (hr)       Value (cms)
8       0.00035
720     0.0
end_breathing_rate_sb
breathing_rate_lpz
Time (hr)       Value (cms)
8       0.00035
24      0.00018
720     0.00023
end_breathing_rate_lpz
end_environment
```

Control Room Filtered Intake Case, Min Intake, Normal CREF:

```
edit_time
0.0 0.25 0.5 0.75 1.0 1.25 1.5 1.75 2.0 2.25 2.5 2.75 3.0 3.25 3.5 3.75 4.0 8.0 24.0 48.0 96.0 240.0 720.0
end_edit_time

participating_isotopes
Kr83m   Kr85m   Kr85    Kr87    Kr88    Kr89
Xe131m  Xe133m  Xe133   Xe135m  Xe135   Xe137   Xe138
I131Org I131Elem        I131Part
I132Org I132Elem        I132Part
I133Org I133Elem        I133Part
I134Org I134Elem        I134Part
I135Org I135Elem        I135Part
Rb86    Cs134   Cs136   Cs137
Sb127   Sb129   Te127m  Te127   Te129m  Te129   Te131m  Te132
Ba137m  Ba139   Ba140
Mo99    Tc99m   Ru103   Ru105   Ru106   Rh105
Y90     Y91     Y92     Y93     Zr95    Zr97    Nb95
La140   La141   La142   Pr143   Nd147   Am241   Cm242   Cm244
Ce141   Ce143   Ce144   Np239   Pu238   Pu239   Pu240   Pu241
Sr89    Sr90    Sr91    Sr92
end_participating_isotopes

core
thermal_power                   3556
elemental_iodine_frac           0.0485
organic_iodine_frac             0.0015
particulate_iodine_frac                 0.95
release_frac
to_control_volume DW
Time N_Gas I_Grp CsGrp TeGrp BaGrp NMtls CeGrp LaGrp SrGrp
0.033   0       0       0       0       0       0       0       0       0
0.533   0.1     0.1     0.1     0       0       0       0       0       0
2.033   0.633   0.167   0.133   0.033   0.0133  0.00167 0.00033 0.00013 0.0133
720     0       0       0       0       0       0       0       0       0
end_to_control_volume
to_control_volume SP
Time N_Gas I_Grp CsGrp TeGrp BaGrp NMtls CeGrp LaGrp SrGrp
0.033   0       0       0       0       0       0       0       0       0
0.533   0       0.2     0       0       0       0       0       0       0
2.033   0       0.334   0       0       0       0       0       0       0
720     0       0       0       0       0       0       0       0       0
end_to_control_volume
end_release_frac
end_core

control_volume
obj_type                                OBJ_CV
name                                    DW
air_volume                              2.0054e+005
water_volume                    0
surface_area                    1
has_recirc_filter                       false
removal_rate_to_surface
Time    NobleGas        ElemIodine      OrgIodine       PartIodine      Solubles        Insolubles
0.25    0.00    0.001   0.00    0.001   0.001   0.001
2.44    0.00    6.20    0.00    6.20    6.20    6.20
24.00   0.00    0.62    0.00    0.62    0.62    0.62
720.0   0.00    0.00    0.00    0.00    0.00    0.00
end_removal_rate_to_surface
frac_4_daughter_resusp_from_surface
Time    NobleGas        ElemIodine      OrgIodine       PartIodine      Solubles        Insolubles
720     1       0       0       0       0
end_frac_4_daughter_resusp_from_surface
end_control_volume

control_volume
obj_type                                OBJ_CV
name                                    WW
```

```
air_volume                          1.442e+005
water_volume                        1.373e+005
surface_area                        0
has_recirc_filter                   false
removal_rate_to_waterpool
Time    NobleGas        ElemIodine      OrgIodine       PartIodine      Solubles        Insolubles
720     0       0       0       0       0       0
end_removal_rate_to_waterpool
frac_4_daughter_resusp_from_water
Time    NobleGas        ElemIodine      OrgIodine       PartIodine      Solubles        Insolubles
720     0       0       0       0       0       0
end_frac_4_daughter_resusp_from_water
decontamination_factor
Time    NobleGas        ElemIodine      OrgIodine       PartIodine      Solubles        Insolubles
720     1       1       1       1       1       1
end_decontamination_factor
end_control_volume

control_volume
obj_type                            OBJ_CV
name                                RB
air_volume                          5000
water_volume                        0
surface_area                        0
has_recirc_filter                   false
end_control_volume

control_volume
obj_type                            OBJ_CV
name                                SP
air_volume                          1.373e+005
water_volume                        0
surface_area                        0
has_recirc_filter                   false
end_control_volume

control_volume
obj_type                            OBJ_CR
name                                Control_Room
air_volume                          2.14e+005
water_volume                        0
surface_area                        0
has_recirc_filter                   false
breathing_rate
Time    (hr)    Value   (cms)
720             0.00035
end_breathing_rate
occupancy_factor
Time    (hr)    Value   (frac)
24              1
96              0.6
720             0.4
end_occupancy_factor
end_control_volume

junction
junction_type               AIR_JUNCTION
downstream_location         AIR_SPACE
upstream                            CORE
downstream                          DW
has_filter                          false
flow_rate
Time    (hr)    Value   (cfm)
720             1
end_flow_rate
end_junction

junction
junction_type               AIR_JUNCTION
downstream_location         AIR_SPACE
```

```
upstream                                CORE
downstream                              SP
has_filter                              false
flow_rate
Time    (hr)    Value   (cfm)
720             1
end_flow_rate
end_junction

junction
junction_type                   AIR_JUNCTION
downstream_location             WATER_POOL
upstream                                DW
downstream                              WW
has_filter                              false
flow_rate
Time    (hr)    Value   (cfm)
2.033           0
720             1.442e5
end_flow_rate
end_junction

junction
junction_type                   AIR_JUNCTION
downstream_location             AIR_SPACE
upstream                                WW
downstream                              DW
has_filter                              false
flow_rate
Time    (hr)    Value   (cfm)
2.033           0
720             1.442e5
end_flow_rate
end_junction

junction
junction_type                   AIR_JUNCTION
downstream_location             AIR_SPACE
upstream                                DW
downstream                              environment
has_filter                              false
flow_rate
Time    (hr)    Value   (cfm)
24      0.1384
720     0.0692
end_flow_rate
X_over_Q_4_ctrl_room
Time    (hr)    Value   (s/m*3)
2       5.42e-4
8       2.31e-4
24      1.93e-4
96      1.50e-4
720     1.44e-4
end_X_over_Q_4_ctrl_room
X_over_Q_4_site_boundary
Time    (hr)    Value   (s/m*3)
720     1.81e-4
end_X_over_Q_4_site_boundary
X_over_Q_4_low_population_zone
Time    (hr)    Value   (s/m*3)
8       4.95e-5
24      3.69e-5
96      1.95e-5
720     7.81e-6
end_X_over_Q_4_low_population_zone
end_junction

junction
junction_type                   AIR_JUNCTION
downstream_location             AIR_SPACE
```

```
upstream                                DW
downstream                              environment
has_filter                              true
flow_rate
Time    (hr)    Value   (cfm)
24      0.4152
720     0.2076
end_flow_rate
filter_efficiency
Time    NobleGas        ElemIodine      OrgIodine       PartIodine      Solubles        Insolubles
720     0               0.427           0.001           0.897           0.897           0.897
end_filter_efficiency
frac_4_daughter_resusp
Time    NobleGas        ElemIodine      OrgIodine       PartIodine      Solubles        Insolubles
720     1       0       0       0       0       0
end_frac_4_daughter_resusp
X_over_Q_4_ctrl_room
Time    (hr)    Value   (s/m*3)
2       5.42e-4
8       2.31e-4
24      1.93e-4
96      1.50e-4
720     1.44e-4
end_X_over_Q_4_ctrl_room
X_over_Q_4_site_boundary
Time    (hr)    Value   (s/m*3)
720     1.81e-4
end_X_over_Q_4_site_boundary
X_over_Q_4_low_population_zone
Time    (hr)    Value   (s/m*3)
8       4.95e-5
24      3.69e-5
96      1.95e-5
720     7.81e-6
end_X_over_Q_4_low_population_zone
end_junction

junction
junction_type                   AIR_JUNCTION
downstream_location             AIR_SPACE
upstream                                DW
downstream                              RB
has_filter                              false
flow_rate
Time    (hr)    Value   (cfm)
0.333           0
24              0.696
720             0.348
end_flow_rate
end_junction

junction
junction_type                   AIR_JUNCTION
downstream_location             AIR_SPACE
upstream                                WW
downstream                              RB
has_filter                              false
flow_rate
Time (hr) Value (cfm)
0.333           0
24              0.5
720             0.25
end_flow_rate
end_junction

junction
junction_type                   AIR_JUNCTION
downstream_location             AIR_SPACE
upstream                                DW
downstream                              environment
```

```
has_filter                              false
flow_rate
Time    (hr)    Value   (cfm)
0.333           0.752
24              0.056
720             0.028
end_flow_rate
X_over_Q_4_ctrl_room
Time    (hr)    Value   (s/m*3)
2       3.08E-4
8       2.36E-4
24      8.77E-5
96      7.42E-5
720     6.40E-5
end_X_over_Q_4_ctrl_room
X_over_Q_4_site_boundary
Time    (hr)    Value   (s/m*3)
720     1.81e-4
end_X_over_Q_4_site_boundary
X_over_Q_4_low_population_zone
Time    (hr)    Value   (s/m*3)
8       4.95e-5
24      3.69e-5
96      1.95e-5
720     7.81e-6
end_X_over_Q_4_low_population_zone
end_junction

junction
junction_type                   AIR_JUNCTION
downstream_location             AIR_SPACE
upstream                                WW
downstream                              environment
has_filter                              false
flow_rate
Time (hr) Value (cfm)
0.333           0.541
24              0.04
720             0.02
end_flow_rate
X_over_Q_4_ctrl_room
Time    (hr)    Value   (s/m*3)
2       3.08E-4
8       2.36E-4
24      8.77E-5
96      7.42E-5
720     6.40E-5
end_X_over_Q_4_ctrl_room
X_over_Q_4_site_boundary
Time    (hr)    Value   (s/m*3)
720     1.81e-4
end_X_over_Q_4_site_boundary
X_over_Q_4_low_population_zone
Time    (hr)    Value   (s/m*3)
8       4.95e-5
24      3.69e-5
96      1.95e-5
720     7.81e-6
end_X_over_Q_4_low_population_zone
end_junction

junction
junction_type                   AIR_JUNCTION
downstream_location             AIR_SPACE
upstream                                SP
downstream                              RB
has_filter                              true
flow_rate
Time    (hr)    Value   (cfm)
0.25    0
```

```
720     0.268
end_flow_rate
filter_efficiency
Time    NobleGas        ElemIodine      OrgIodine       PartIodine      Solubles        Insolubles
720     0.5     0       0       0.99999 0       0
end_filter_efficiency
end_junction

junction
junction_type                   AIR_JUNCTION
downstream_location             AIR_SPACE
upstream                                RB
downstream                              environment
has_filter                              true
flow_rate
Time    (hr)    Value   (cfm)
720     5000
end_flow_rate
filter_efficiency
Time    NobleGas        ElemIodine      OrgIodine       PartIodine      Solubles        Insolubles
0.333   0       0       0       0       0       0
720     0       0.98    0.98    0.98    0.98    0.98
end_filter_efficiency
frac_4_daughter_resusp
Time    NobleGas        ElemIodine      OrgIodine       PartIodine      Solubles        Insolubles
720     1       1       0       0       0       0
end_frac_4_daughter_resusp
X_over_Q_4_ctrl_room
Time    (hr)    Value   (s/m*3)
0.333   3.08E-4
2       1.56E-4
8       1.15E-4
24      4.14E-5
96      3.52E-5
720     3.03E-5
end_X_over_Q_4_ctrl_room
X_over_Q_4_site_boundary
Time    (hr)    Value   (s/m*3)
720     1.81e-4
end_X_over_Q_4_site_boundary
X_over_Q_4_low_population_zone
Time    (hr)    Value   (s/m*3)
8       4.95e-5
24      3.69e-5
96      1.95e-5
720     7.81e-6
end_X_over_Q_4_low_population_zone
end_junction

junction
junction_type                   AIR_JUNCTION
downstream_location             AIR_SPACE
upstream                                environment
downstream                              Control_Room
has_filter                              true
flow_rate
Time    (hr)    Value   (cfm)
8       1300
720     800
end_flow_rate
filter_efficiency
Time    NobleGas        ElemIodine      OrgIodine       PartIodine      Solubles        Insolubles
720     0       0.95    0.95    0.99    0.99    0.99
end_filter_efficiency
frac_4_daughter_resusp
Time    NobleGas        ElemIodine      OrgIodine       PartIodine      Solubles        Insolubles
720     1       1       0       0       0       0
end_frac_4_daughter_resusp
end_junction
```

```
junction
junction_type                   AIR_JUNCTION
downstream_location             AIR_SPACE
upstream                                Control_Room
downstream                              environment
has_filter                              false
flow_rate
Time    (hr)    Value   (cfm)
8       1375
720     850
end_flow_rate
X_over_Q_4_ctrl_room
Time    (hr)    Value   (s/m*3)
720     0
end_X_over_Q_4_ctrl_room
X_over_Q_4_site_boundary
Time    (hr)    Value   (s/m*3)
720     0
end_X_over_Q_4_site_boundary
X_over_Q_4_low_population_zone
Time    (hr)    Value   (s/m*3)
720     0
end_X_over_Q_4_low_population_zone
end_junction

environment
breathing_rate_sb
Time (hr)       Value (cms)
8       0.00035
720     0.0
end_breathing_rate_sb
breathing_rate_lpz
Time (hr)       Value (cms)
8       0.00035
24      0.00018
720     0.00023
end_breathing_rate_lpz
end_environment
```

Control Room Unfiltered Inleakage Case, Min Intake, Normal CREF:

```
edit_time
0.0 0.25 0.5 0.75 1.0 1.25 1.5 1.75 2.0 2.25 2.5 2.75 3.0 3.25 3.5 3.75 4.0 8.0 24.0 48.0 96.0 240.0 720.0
end_edit_time

participating_isotopes
Kr83m   Kr85m   Kr85    Kr87    Kr88    Kr89
Xe131m  Xe133m  Xe133   Xe135m  Xe135   Xe137   Xe138
I131Org I131Elem        I131Part
I132Org I132Elem        I132Part
I133Org I133Elem        I133Part
I134Org I134Elem        I134Part
I135Org I135Elem        I135Part
Rb86    Cs134   Cs136   Cs137
Sb127   Sb129   Te127m  Te127   Te129m  Te129   Te131m  Te132
Ba137m  Ba139   Ba140
Mo99    Tc99m   Ru103   Ru105   Ru106   Rh105
Y90     Y91     Y92     Y93     Zr95    Zr97    Nb95
La140   La141   La142   Pr143   Nd147   Am241   Cm242   Cm244
Ce141   Ce143   Ce144   Np239   Pu238   Pu239   Pu240   Pu241
Sr89    Sr90    Sr91    Sr92
end_participating_isotopes

core
thermal_power                   3556
elemental_iodine_frac           0.0485
organic_iodine_frac             0.0015
particulate_iodine_frac                 0.95
release_frac
to_control_volume DW
Time N_Gas I_Grp CsGrp TeGrp BaGrp NMtls CeGrp LaGrp SrGrp
0.033   0       0       0       0       0       0       0       0       0
0.533   0.1     0.1     0.1     0       0       0       0       0       0
2.033   0.633   0.167   0.133   0.033   0.0133  0.00167 0.00033 0.00013 0.0133
720     0       0       0       0       0       0       0       0       0
end_to_control_volume
to_control_volume SP
Time N_Gas I_Grp CsGrp TeGrp BaGrp NMtls CeGrp LaGrp SrGrp
0.033   0       0       0       0       0       0       0       0       0
0.533   0       0.2     0       0       0       0       0       0       0
2.033   0       0.334   0       0       0       0       0       0       0
720     0       0       0       0       0       0       0       0       0
end_to_control_volume
end_release_frac
end_core

control_volume
obj_type                                OBJ_CV
name                                    DW
air_volume                              2.0054e+005
water_volume                    0
surface_area                    1
has_recirc_filter                       false
removal_rate_to_surface
Time    NobleGas        ElemIodine      OrgIodine       PartIodine      Solubles        Insolubles
0.25    0.00    0.001   0.00    0.001   0.001   0.001
2.44    0.00    6.20    0.00    6.20    6.20    6.20
24.00   0.00    0.62    0.00    0.62    0.62    0.62
720.0   0.00    0.00    0.00    0.00    0.00    0.00
end_removal_rate_to_surface
frac_4_daughter_resusp_from_surface
Time    NobleGas        ElemIodine      OrgIodine       PartIodine      Solubles        Insolubles
720     1       0       0       0       0       0
end_frac_4_daughter_resusp_from_surface
end_control_volume

control_volume
obj_type                                OBJ_CV
name                                    WW
```

```
air_volume                              1.442e+005
water_volume                            1.373e+005
surface_area                            0
has_recirc_filter                       false
removal_rate_to_waterpool
Time    NobleGas        ElemIodine      OrgIodine       PartIodine      Solubles        Insolubles
720     0       0       0       0       0       0
end_removal_rate_to_waterpool
frac_4_daughter_resusp_from_water
Time    NobleGas        ElemIodine      OrgIodine       PartIodine      Solubles        Insolubles
720     0       0       0       0       0       0
end_frac_4_daughter_resusp_from_water
decontamination_factor
Time    NobleGas        ElemIodine      OrgIodine       PartIodine      Solubles        Insolubles
720     1       1       1       1       1       1
end_decontamination_factor
end_control_volume

control_volume
obj_type                                OBJ_CV
name                                    RB
air_volume                              5000
water_volume                            0
surface_area                            0
has_recirc_filter                       false
end_control_volume

control_volume
obj_type                                OBJ_CV
name                                    SP
air_volume                              1.373e+005
water_volume                            0
surface_area                            0
has_recirc_filter                       false
end_control_volume

control_volume
obj_type                                OBJ_CR
name                                    Control_Room
air_volume                              2.14e+005
water_volume                            0
surface_area                            0
has_recirc_filter                       false
breathing_rate
Time    (hr)    Value   (cms)
720             0.00035
end_breathing_rate
occupancy_factor
Time    (hr)    Value   (frac)
24              1
96              0.6
720             0.4
end_occupancy_factor
end_control_volume

junction
junction_type                   AIR_JUNCTION
downstream_location             AIR_SPACE
upstream                                CORE
downstream                              DW
has_filter                              false
flow_rate
Time    (hr)    Value   (cfm)
720             1
end_flow_rate
end_junction

junction
junction_type                   AIR_JUNCTION
downstream_location             AIR_SPACE
```

```
upstream                                CORE
downstream                              SP
has_filter                              false
flow_rate
Time    (hr)    Value   (cfm)
720             1
end_flow_rate
end_junction

junction
junction_type                   AIR_JUNCTION
downstream_location             WATER_POOL
upstream                                DW
downstream                              WW
has_filter                              false
flow_rate
Time    (hr)    Value   (cfm)
2.033           0
720             1.442e5
end_flow_rate
end_junction

junction
junction_type                   AIR_JUNCTION
downstream_location             AIR_SPACE
upstream                                WW
downstream                              DW
has_filter                              false
flow_rate
Time    (hr)    Value   (cfm)
2.033           0
720             1.442e5
end_flow_rate
end_junction

junction
junction_type                   AIR_JUNCTION
downstream_location             AIR_SPACE
upstream                                DW
downstream                              environment
has_filter                              false
flow_rate
Time    (hr)    Value   (cfm)
24      0.1384
720     0.0692
end_flow_rate
X_over_Q_4_ctrl_room
Time    (hr)    Value   (s/m*3)
2       4.70e-3
8       2.00e-3
24      1.03e-3
96      8.01e-4
720     7.69e-4
end_X_over_Q_4_ctrl_room
X_over_Q_4_site_boundary
Time    (hr)    Value   (s/m*3)
720     1.81e-4
end_X_over_Q_4_site_boundary
X_over_Q_4_low_population_zone
Time    (hr)    Value   (s/m*3)
8       4.95e-5
24      3.69e-5
96      1.95e-5
720     7.81e-6
end_X_over_Q_4_low_population_zone
end_junction

junction
junction_type                   AIR_JUNCTION
downstream_location             AIR_SPACE
```

```
upstream                                DW
downstream                              environment
has_filter                              true
flow_rate
Time    (hr)    Value   (cfm)
24      0.4152
720     0.2076
end_flow_rate
filter_efficiency
Time    NobleGas        ElemIodine      OrgIodine       PartIodine      Solubles        Insolubles
720     0               0.427           0.001           0.897           0.897           0.897
end_filter_efficiency
frac_4_daughter_resusp
Time    NobleGas        ElemIodine      OrgIodine       PartIodine      Solubles        Insolubles
720     1       0       0       0       0       0
end_frac_4_daughter_resusp
X_over_Q_4_ctrl_room
Time    (hr)    Value   (s/m*3)
2       4.70e-3
8       2.00e-3
24      1.03e-3
96      8.01e-4
720     7.69e-4
end_X_over_Q_4_ctrl_room
X_over_Q_4_site_boundary
Time    (hr)    Value   (s/m*3)
720     1.81e-4
end_X_over_Q_4_site_boundary
X_over_Q_4_low_population_zone
Time    (hr)    Value   (s/m*3)
8       4.95e-5
24      3.69e-5
96      1.95e-5
720     7.81e-6
end_X_over_Q_4_low_population_zone
end_junction

junction
junction_type                   AIR_JUNCTION
downstream_location             AIR_SPACE
upstream                                DW
downstream                              RB
has_filter                              false
flow_rate
Time    (hr)    Value   (cfm)
0.333           0
24              0.696
720             0.348
end_flow_rate
end_junction

junction
junction_type                   AIR_JUNCTION
downstream_location             AIR_SPACE
upstream                                WW
downstream                              RB
has_filter                              false
flow_rate
Time (hr) Value (cfm)
0.333           0
24              0.5
720             0.25
end_flow_rate
end_junction

junction
junction_type                   AIR_JUNCTION
downstream_location             AIR_SPACE
upstream                                DW
downstream                              environment
```

```
has_filter                              false
flow_rate
Time    (hr)    Value   (cfm)
0.333           0.752
24              0.056
720             0.028
end_flow_rate
X_over_Q_4_ctrl_room
Time    (hr)    Value   (s/m*3)
2       7.02E-4
8       3.19E-4
24      1.30E-4
96      1.05E-4
720     9.00E-5
end_X_over_Q_4_ctrl_room
X_over_Q_4_site_boundary
Time    (hr)    Value   (s/m*3)
720     1.81e-4
end_X_over_Q_4_site_boundary
X_over_Q_4_low_population_zone
Time    (hr)    Value   (s/m*3)
8       4.95e-5
24      3.69e-5
96      1.95e-5
720     7.81e-6
end_X_over_Q_4_low_population_zone
end_junction

junction
junction_type                   AIR_JUNCTION
downstream_location             AIR_SPACE
upstream                                WW
downstream                              environment
has_filter                              false
flow_rate
Time (hr) Value (cfm)
0.333           0.541
24              0.04
720             0.02
end_flow_rate
X_over_Q_4_ctrl_room
Time    (hr)    Value   (s/m*3)
2       7.02E-4
8       3.19E-4
24      1.30E-4
96      1.05E-4
720     9.00E-5
end_X_over_Q_4_ctrl_room
X_over_Q_4_site_boundary
Time    (hr)    Value   (s/m*3)
720     1.81e-4
end_X_over_Q_4_site_boundary
X_over_Q_4_low_population_zone
Time    (hr)    Value   (s/m*3)
8       4.95e-5
24      3.69e-5
96      1.95e-5
720     7.81e-6
end_X_over_Q_4_low_population_zone
end_junction

junction
junction_type                   AIR_JUNCTION
downstream_location             AIR_SPACE
upstream                                SP
downstream                              RB
has_filter                              true
flow_rate
Time    (hr)    Value   (cfm)
0.25    0
```

```
720     0.268
end_flow_rate
filter_efficiency
Time    NobleGas        ElemIodine      OrgIodine       PartIodine      Solubles        Insolubles
720     0.5     0       0       0.99999 0       0
end_filter_efficiency
end_junction

junction
junction_type                   AIR_JUNCTION
downstream_location             AIR_SPACE
upstream                                RB
downstream                              environment
has_filter                              true
flow_rate
Time    (hr)    Value   (cfm)
720     5000
end_flow_rate
filter_efficiency
Time    NobleGas        ElemIodine      OrgIodine       PartIodine      Solubles        Insolubles
0.333   0       0       0       0       0       0
720     0       0.98    0.98    0.98    0.98    0.98
end_filter_efficiency
frac_4_daughter_resusp
Time    NobleGas        ElemIodine      OrgIodine       PartIodine      Solubles        Insolubles
720     1       1       0       0       0       0
end_frac_4_daughter_resusp
X_over_Q_4_ctrl_room
Time    (hr)    Value   (s/m*3)
0.333   7.02E-4
2       6.95E-4
8       3.36E-4
24      1.28E-4
96      9.72E-5
720     7.69E-5
end_X_over_Q_4_ctrl_room
X_over_Q_4_site_boundary
Time    (hr)    Value   (s/m*3)
720     1.81e-4
end_X_over_Q_4_site_boundary
X_over_Q_4_low_population_zone
Time    (hr)    Value   (s/m*3)
8       4.95e-5
24      3.69e-5
96      1.95e-5
720     7.81e-6
end_X_over_Q_4_low_population_zone
end_junction

junction
junction_type                   AIR_JUNCTION
downstream_location             AIR_SPACE
upstream                                environment
downstream                              Control_Room
has_filter                              false
flow_rate
Time    (hr)    Value   (cfm)
8       75
720     50
end_flow_rate
end_junction

junction
junction_type                   AIR_JUNCTION
downstream_location             AIR_SPACE
upstream                                Control_Room
downstream                              environment
has_filter                              false
flow_rate
Time    (hr)    Value   (cfm)
```

```
8       1375
720     850
end_flow_rate
X_over_Q_4_ctrl_room
Time    (hr)    Value   (s/m*3)
720     0
end_X_over_Q_4_ctrl_room
X_over_Q_4_site_boundary
Time    (hr)    Value   (s/m*3)
720     0
end_X_over_Q_4_site_boundary
X_over_Q_4_low_population_zone
Time    (hr)    Value   (s/m*3)
720     0
end_X_over_Q_4_low_population_zone
end_junction

environment
breathing_rate_sb
Time (hr)       Value (cms)
8       0.00035
720     0.0
end_breathing_rate_sb
breathing_rate_lpz
Time (hr)       Value (cms)
8       0.00035
24      0.00018
720     0.00023
end_breathing_rate_lpz
end_environment
```

Control Room Filtered Intake Case, Min Intake, One CREF Failed:

```
edit_time
0.0 0.25 0.5 0.75 1.0 1.25 1.5 1.75 2.0 2.25 2.5 2.75 3.0 3.25 3.5 3.75 4.0 8.0 24.0 48.0 96.0 240.0 720.0
end_edit_time

participating_isotopes
Kr83m   Kr85m   Kr85    Kr87    Kr88    Kr89
Xe131m  Xe133m  Xe133   Xe135m  Xe135   Xe137   Xe138
I131Org I131Elem        I131Part
I132Org I132Elem        I132Part
I133Org I133Elem        I133Part
I134Org I134Elem        I134Part
I135Org I135Elem        I135Part
Rb86    Cs134   Cs136   Cs137
Sb127   Sb129   Te127m  Te127   Te129m  Te129   Te131m  Te132
Ba137m  Ba139   Ba140
Mo99    Tc99m   Ru103   Ru105   Ru106   Rh105
Y90     Y91     Y92     Y93     Zr95    Zr97    Nb95
La140   La141   La142   Pr143   Nd147   Am241   Cm242   Cm244
Ce141   Ce143   Ce144   Np239   Pu238   Pu239   Pu240   Pu241
Sr89    Sr90    Sr91    Sr92
end_participating_isotopes

core
thermal_power                   3556
elemental_iodine_frac           0.0485
organic_iodine_frac             0.0015
particulate_iodine_frac                 0.95
release_frac
to_control_volume DW
Time N_Gas I_Grp CsGrp TeGrp BaGrp NMtls CeGrp LaGrp SrGrp
0.033   0       0       0       0       0       0       0       0       0
0.533   0.1     0.1     0.1     0       0       0       0       0       0
2.033   0.633   0.167   0.133   0.033   0.0133  0.00167 0.00033 0.00013 0.0133
720     0       0       0       0       0       0       0       0       0
end_to_control_volume
to_control_volume SP
Time N_Gas I_Grp CsGrp TeGrp BaGrp NMtls CeGrp LaGrp SrGrp
```

```
0.033   0       0       0       0       0       0       0       0       0
0.533   0       0.2     0       0       0       0       0       0       0
2.033   0       0.334   0       0       0       0       0       0       0
720     0       0       0       0       0       0       0       0       0
end_to_control_volume
end_release_frac
end_core

control_volume
obj_type                                OBJ_CV
name                                    DW
air_volume                              2.0054e+005
water_volume                    0
surface_area                    1
has_recirc_filter                       false
removal_rate_to_surface
Time    NobleGas        ElemIodine      OrgIodine       PartIodine      Solubles        Insolubles
0.25    0.00    0.001   0.00    0.001   0.001   0.001
2.44    0.00    6.20    0.00    6.20    6.20    6.20
24.00   0.00    0.62    0.00    0.62    0.62    0.62
720.0   0.00    0.00    0.00    0.00    0.00    0.00
end_removal_rate_to_surface
frac_4_daughter_resusp_from_surface
Time    NobleGas        ElemIodine      OrgIodine       PartIodine      Solubles        Insolubles
720     1       0       0       0       0       0
end_frac_4_daughter_resusp_from_surface
end_control_volume

control_volume
obj_type                                OBJ_CV
name                                    WW
air_volume                              1.442e+005
water_volume                            1.373e+005
surface_area                            0
has_recirc_filter                       false
removal_rate_to_waterpool
Time    NobleGas        ElemIodine      OrgIodine       PartIodine      Solubles        Insolubles
720     0       0       0       0       0       0
end_removal_rate_to_waterpool
frac_4_daughter_resusp_from_water
Time    NobleGas        ElemIodine      OrgIodine       PartIodine      Solubles        Insolubles
720     0       0       0       0       0       0
end_frac_4_daughter_resusp_from_water
decontamination_factor
Time    NobleGas        ElemIodine      OrgIodine       PartIodine      Solubles        Insolubles
720     1       1       1       1       1       1
end_decontamination_factor
end_control_volume

control_volume
obj_type                                OBJ_CV
name                                    RB
air_volume                              5000
water_volume                            0
surface_area                            0
has_recirc_filter                       false
end_control_volume

control_volume
obj_type                                OBJ_CV
name                                    SP
air_volume                              1.373e+005
water_volume                            0
surface_area                            0
has_recirc_filter                       false
end_control_volume

control_volume
obj_type                                OBJ_CR
name                                    Control_Room
```

```
air_volume                              2.14e+005
water_volume                            0
surface_area                            0
has_recirc_filter                       false
breathing_rate
Time    (hr)    Value   (cms)
720             0.00035
end_breathing_rate
occupancy_factor
Time    (hr)    Value   (frac)
24              1
96              0.6
720             0.4
end_occupancy_factor
end_control_volume

junction
junction_type                   AIR_JUNCTION
downstream_location             AIR_SPACE
upstream                                CORE
downstream                              DW
has_filter                              false
flow_rate
Time    (hr)    Value   (cfm)
720             1
end_flow_rate
end_junction

junction
junction_type                   AIR_JUNCTION
downstream_location             AIR_SPACE
upstream                                CORE
downstream                              SP
has_filter                              false
flow_rate
Time    (hr)    Value   (cfm)
720             1
end_flow_rate
end_junction

junction
junction_type                   AIR_JUNCTION
downstream_location             WATER_POOL
upstream                                DW
downstream                              WW
has_filter                              false
flow_rate
Time    (hr)    Value   (cfm)
2.033           0
720             1.442e5
end_flow_rate
end_junction

junction
junction_type                   AIR_JUNCTION
downstream_location             AIR_SPACE
upstream                                WW
downstream                              DW
has_filter                              false
flow_rate
Time    (hr)    Value   (cfm)
2.033           0
720             1.442e5
end_flow_rate
end_junction

junction
junction_type                   AIR_JUNCTION
downstream_location             AIR_SPACE
upstream                                DW
```

```
downstream                                  environment
has_filter                                  false
flow_rate
Time    (hr)    Value   (cfm)
24      0.1384
720     0.0692
end_flow_rate
X_over_Q_4_ctrl_room
Time    (hr)    Value   (s/m*3)
2       8.81e-4
8       3.75e-4
24      1.93e-4
96      1.50e-4
720     1.44e-4
end_X_over_Q_4_ctrl_room
X_over_Q_4_site_boundary
Time    (hr)    Value   (s/m*3)
720     1.81e-4
end_X_over_Q_4_site_boundary
X_over_Q_4_low_population_zone
Time    (hr)    Value   (s/m*3)
8       4.95e-5
24      3.69e-5
96      1.95e-5
720     7.81e-6
end_X_over_Q_4_low_population_zone
end_junction

junction
junction_type                   AIR_JUNCTION
downstream_location             AIR_SPACE
upstream                                    DW
downstream                                  environment
has_filter                                  true
flow_rate
Time    (hr)    Value   (cfm)
24      0.4152
720     0.2076
end_flow_rate
filter_efficiency
Time    NobleGas        ElemIodine      OrgIodine       PartIodine      Solubles        Insolubles
720     0               0.427           0.001           0.897           0.897           0.897
end_filter_efficiency
frac_4_daughter_resusp
Time    NobleGas        ElemIodine      OrgIodine       PartIodine      Solubles        Insolubles
720     1       0       0       0       0       0
end_frac_4_daughter_resusp
X_over_Q_4_ctrl_room
Time    (hr)    Value   (s/m*3)
2       8.81e-4
8       3.75e-4
24      1.93e-4
96      1.50e-4
720     1.44e-4
end_X_over_Q_4_ctrl_room
X_over_Q_4_site_boundary
Time    (hr)    Value   (s/m*3)
720     1.81e-4
end_X_over_Q_4_site_boundary
X_over_Q_4_low_population_zone
Time    (hr)    Value   (s/m*3)
8       4.95e-5
24      3.69e-5
96      1.95e-5
720     7.81e-6
end_X_over_Q_4_low_population_zone
end_junction

junction
junction_type                   AIR_JUNCTION
```

```
downstream_location                AIR_SPACE
upstream                                DW
downstream                              RB
has_filter                              false
flow_rate
Time    (hr)    Value   (cfm)
0.333           0
24              0.696
720             0.348
end_flow_rate
end_junction

junction
junction_type                   AIR_JUNCTION
downstream_location             AIR_SPACE
upstream                                WW
downstream                              RB
has_filter                              false
flow_rate
Time (hr) Value (cfm)
0.333           0
24              0.5
720             0.25
end_flow_rate
end_junction

junction
junction_type                   AIR_JUNCTION
downstream_location             AIR_SPACE
upstream                                DW
downstream                              environment
has_filter                              false
flow_rate
Time    (hr)    Value   (cfm)
0.333           0.752
24              0.056
720             0.028
end_flow_rate
X_over_Q_4_ctrl_room
Time    (hr)    Value   (s/m*3)
2       2.82E-4
8       2.17E-4
24      8.77E-5
96      7.42E-5
720     6.40E-5
end_X_over_Q_4_ctrl_room
X_over_Q_4_site_boundary
Time    (hr)    Value   (s/m*3)
720     1.81e-4
end_X_over_Q_4_site_boundary
X_over_Q_4_low_population_zone
Time    (hr)    Value   (s/m*3)
8       4.95e-5
24      3.69e-5
96      1.95e-5
720     7.81e-6
end_X_over_Q_4_low_population_zone
end_junction

junction
junction_type                   AIR_JUNCTION
downstream_location             AIR_SPACE
upstream                                WW
downstream                              environment
has_filter                              false
flow_rate
Time (hr) Value (cfm)
0.333           0.541
24              0.04
720             0.02
```

```
end_flow_rate
X_over_Q_4_ctrl_room
Time    (hr)    Value   (s/m*3)
2       2.82E-4
8       2.17E-4
24      8.77E-5
96      7.42E-5
720     6.40E-5
end_X_over_Q_4_ctrl_room
X_over_Q_4_site_boundary
Time    (hr)    Value   (s/m*3)
720     1.81e-4
end_X_over_Q_4_site_boundary
X_over_Q_4_low_population_zone
Time    (hr)    Value   (s/m*3)
8       4.95e-5
24      3.69e-5
96      1.95e-5
720     7.81e-6
end_X_over_Q_4_low_population_zone
end_junction

junction
junction_type                   AIR_JUNCTION
downstream_location             AIR_SPACE
upstream                                SP
downstream                              RB
has_filter                              true
flow_rate
Time    (hr)    Value   (cfm)
0.25    0
720     0.268
end_flow_rate
filter_efficiency
Time    NobleGas        ElemIodine      OrgIodine       PartIodine      Solubles        Insolubles
720     0.5     0       0       0.99999 0       0
end_filter_efficiency
end_junction

junction
junction_type                   AIR_JUNCTION
downstream_location             AIR_SPACE
upstream                                RB
downstream                              environment
has_filter                              true
flow_rate
Time    (hr)    Value   (cfm)
720     5000
end_flow_rate
filter_efficiency
Time    NobleGas        ElemIodine      OrgIodine       PartIodine      Solubles        Insolubles
0.333   0       0       0       0       0       0
720     0       0.98    0.98    0.98    0.98    0.98
end_filter_efficiency
frac_4_daughter_resusp
Time    NobleGas        ElemIodine      OrgIodine       PartIodine      Solubles        Insolubles
720     1       1       0       0       0       0
end_frac_4_daughter_resusp
X_over_Q_4_ctrl_room
Time    (hr)    Value   (s/m*3)
0.333   2.82E-4
2       1.43E-4
8       1.05E-4
24      4.14E-5
96      3.52E-5
720     3.03E-5
end_X_over_Q_4_ctrl_room
X_over_Q_4_site_boundary
Time    (hr)    Value   (s/m*3)
720     1.81e-4
```

```
end_X_over_Q_4_site_boundary
X_over_Q_4_low_population_zone
Time    (hr)    Value   (s/m*3)
8       4.95e-5
24      3.69e-5
96      1.95e-5
720     7.81e-6
end_X_over_Q_4_low_population_zone
end_junction

junction
junction_type                   AIR_JUNCTION
downstream_location             AIR_SPACE
upstream                                environment
downstream                              Control_Room
has_filter                              true
flow_rate
Time    (hr)    Value   (cfm)
720     800
end_flow_rate
filter_efficiency
Time    NobleGas        ElemIodine      OrgIodine       PartIodine      Solubles        Insolubles
720     0       0.95    0.95    0.99    0.99    0.99
end_filter_efficiency
frac_4_daughter_resusp
Time    NobleGas        ElemIodine      OrgIodine       PartIodine      Solubles        Insolubles
720     1       1       0       0       0       0
end_frac_4_daughter_resusp
end_junction

junction
junction_type                   AIR_JUNCTION
downstream_location             AIR_SPACE
upstream                                Control_Room
downstream                              environment
has_filter                              false
flow_rate
Time    (hr)    Value   (cfm)
720     850
end_flow_rate
X_over_Q_4_ctrl_room
Time    (hr)    Value   (s/m*3)
720     0
end_X_over_Q_4_ctrl_room
X_over_Q_4_site_boundary
Time    (hr)    Value   (s/m*3)
720     0
end_X_over_Q_4_site_boundary
X_over_Q_4_low_population_zone
Time    (hr)    Value   (s/m*3)
720     0
end_X_over_Q_4_low_population_zone
end_junction

environment
breathing_rate_sb
Time (hr)       Value (cms)
8       0.00035
720     0.0
end_breathing_rate_sb
breathing_rate_lpz
Time (hr)       Value (cms)
8       0.00035
24      0.00018
720     0.00023
end_breathing_rate_lpz
end_environment
```

Control Room Unfiltered Inleakage Case, Min Intake, One CREF Failed:

```
edit_time
0.0 0.25 0.5 0.75 1.0 1.25 1.5 1.75 2.0 2.25 2.5 2.75 3.0 3.25 3.5 3.75 4.0 8.0 24.0 48.0 96.0 240.0 720.0
end_edit_time

participating_isotopes
Kr83m   Kr85m   Kr85    Kr87    Kr88    Kr89
Xe131m  Xe133m  Xe133   Xe135m  Xe135   Xe137   Xe138
I131Org I131Elem        I131Part
I132Org I132Elem        I132Part
I133Org I133Elem        I133Part
I134Org I134Elem        I134Part
I135Org I135Elem        I135Part
Rb86    Cs134   Cs136   Cs137
Sb127   Sb129   Te127m  Te127   Te129m  Te129   Te131m  Te132
Ba137m  Ba139   Ba140
Mo99    Tc99m   Ru103   Ru105   Ru106   Rh105
Y90     Y91     Y92     Y93     Zr95    Zr97    Nb95
La140   La141   La142   Pr143   Nd147   Am241   Cm242   Cm244
Ce141   Ce143   Ce144   Np239   Pu238   Pu239   Pu240   Pu241
Sr89    Sr90    Sr91    Sr92
end_participating_isotopes

core
thermal_power                   3556
elemental_iodine_frac           0.0485
organic_iodine_frac             0.0015
particulate_iodine_frac                 0.95
release_frac
to_control_volume DW
Time N_Gas I_Grp CsGrp TeGrp BaGrp NMtls CeGrp LaGrp SrGrp
0.033   0       0       0       0       0       0       0       0
0.533   0.1     0.1     0.1     0       0       0       0       0
2.033   0.633   0.167   0.133   0.033   0.0133  0.00167 0.00033 0.00013 0.0133
720     0       0       0       0       0       0       0       0       0
end_to_control_volume
to_control_volume SP
Time N_Gas I_Grp CsGrp TeGrp BaGrp NMtls CeGrp LaGrp SrGrp
0.033   0       0       0       0       0       0       0       0       0
0.533   0       0.2     0       0       0       0       0       0       0
2.033   0       0.334   0       0       0       0       0       0       0
720     0       0       0       0       0       0       0       0       0
end_to_control_volume
end_release_frac
end_core

control_volume
obj_type                                OBJ_CV
name                                    DW
air_volume                              2.0054e+005
water_volume                    0
surface_area                    1
has_recirc_filter                       false
removal_rate_to_surface
Time    NobleGas        ElemIodine      OrgIodine       PartIodine      Solubles        Insolubles
0.25    0.00    0.001   0.00    0.001   0.001   0.001
2.44    0.00    6.20    0.00    6.20    6.20    6.20
24.00   0.00    0.62    0.00    0.62    0.62    0.62
720.0   0.00    0.00    0.00    0.00    0.00    0.00
end_removal_rate_to_surface
frac_4_daughter_resusp_from_surface
Time    NobleGas        ElemIodine      OrgIodine       PartIodine      Solubles        Insolubles
720     1       0       0       0       0       0
end_frac_4_daughter_resusp_from_surface
end_control_volume

control_volume
obj_type                                OBJ_CV
name                                    WW
```

```
air_volume                              1.442e+005
water_volume                            1.373e+005
surface_area                            0
has_recirc_filter                       false
removal_rate_to_waterpool
Time    NobleGas        ElemIodine      OrgIodine       PartIodine      Solubles        Insolubles
720     0       0       0       0       0       0
end_removal_rate_to_waterpool
frac_4_daughter_resusp_from_water
Time    NobleGas        ElemIodine      OrgIodine       PartIodine      Solubles        Insolubles
720     0       0       0       0       0       0
end_frac_4_daughter_resusp_from_water
decontamination_factor
Time    NobleGas        ElemIodine      OrgIodine       PartIodine      Solubles        Insolubles
720     1       1       1       1       1       1
end_decontamination_factor
end_control_volume

control_volume
obj_type                                OBJ_CV
name                                    RB
air_volume                              5000
water_volume                            0
surface_area                            0
has_recirc_filter                       false
end_control_volume

control_volume
obj_type                                OBJ_CV
name                                    SP
air_volume                              1.373e+005
water_volume                            0
surface_area                            0
has_recirc_filter                       false
end_control_volume

control_volume
obj_type                                OBJ_CR
name                                    Control_Room
air_volume                              2.14e+005
water_volume                            0
surface_area                            0
has_recirc_filter                       false
breathing_rate
Time    (hr)    Value   (cms)
720             0.00035
end_breathing_rate
occupancy_factor
Time    (hr)    Value   (frac)
24              1
96              0.6
720             0.4
end_occupancy_factor
end_control_volume

junction
junction_type                   AIR_JUNCTION
downstream_location             AIR_SPACE
upstream                                CORE
downstream                              DW
has_filter                              false
flow_rate
Time    (hr)    Value   (cfm)
720             1
end_flow_rate
end_junction

junction
junction_type                   AIR_JUNCTION
downstream_location             AIR_SPACE
```

```
upstream                              CORE
downstream                            SP
has_filter                            false
flow_rate
Time    (hr)    Value   (cfm)
720             1
end_flow_rate
end_junction

junction
junction_type                 AIR_JUNCTION
downstream_location           WATER_POOL
upstream                              DW
downstream                            WW
has_filter                            false
flow_rate
Time    (hr)    Value   (cfm)
2.033           0
720             1.442e5
end_flow_rate
end_junction

junction
junction_type                 AIR_JUNCTION
downstream_location           AIR_SPACE
upstream                              WW
downstream                            DW
has_filter                            false
flow_rate
Time    (hr)    Value   (cfm)
2.033           0
720             1.442e5
end_flow_rate
end_junction

junction
junction_type                 AIR_JUNCTION
downstream_location           AIR_SPACE
upstream                              DW
downstream                            environment
has_filter                            false
flow_rate
Time    (hr)    Value   (cfm)
24      0.1384
720     0.0692
end_flow_rate
X_over_Q_4_ctrl_room
Time    (hr)    Value   (s/m*3)
2       4.70e-3
8       2.00e-3
24      1.03e-3
96      8.01e-4
720     7.69e-4
end_X_over_Q_4_ctrl_room
X_over_Q_4_site_boundary
Time    (hr)    Value   (s/m*3)
720     1.81e-4
end_X_over_Q_4_site_boundary
X_over_Q_4_low_population_zone
Time    (hr)    Value   (s/m*3)
8       4.95e-5
24      3.69e-5
96      1.95e-5
720     7.81e-6
end_X_over_Q_4_low_population_zone
end_junction

junction
junction_type                 AIR_JUNCTION
downstream_location           AIR_SPACE
```

```
upstream                                DW
downstream                              environment
has_filter                              true
flow_rate
Time    (hr)    Value   (cfm)
24      0.4152
720     0.2076
end_flow_rate
filter_efficiency
Time    NobleGas        ElemIodine      OrgIodine       PartIodine      Solubles        Insolubles
720     0               0.427           0.001           0.897           0.897           0.897
end_filter_efficiency
frac_4_daughter_resusp
Time    NobleGas        ElemIodine      OrgIodine       PartIodine      Solubles        Insolubles
720     1       0       0       0       0       0
end_frac_4_daughter_resusp
X_over_Q_4_ctrl_room
Time    (hr)    Value   (s/m*3)
2       4.70e-3
8       2.00e-3
24      1.03e-3
96      8.01e-4
720     7.69e-4
end_X_over_Q_4_ctrl_room
X_over_Q_4_site_boundary
Time    (hr)    Value   (s/m*3)
720     1.81e-4
end_X_over_Q_4_site_boundary
X_over_Q_4_low_population_zone
Time    (hr)    Value   (s/m*3)
8       4.95e-5
24      3.69e-5
96      1.95e-5
720     7.81e-6
end_X_over_Q_4_low_population_zone
end_junction

junction
junction_type                   AIR_JUNCTION
downstream_location             AIR_SPACE
upstream                                DW
downstream                              RB
has_filter                              false
flow_rate
Time    (hr)    Value   (cfm)
0.333           0
24              0.696
720             0.348
end_flow_rate
end_junction

junction
junction_type                   AIR_JUNCTION
downstream_location             AIR_SPACE
upstream                                WW
downstream                              RB
has_filter                              false
flow_rate
Time (hr) Value (cfm)
0.333           0
24              0.5
720             0.25
end_flow_rate
end_junction

junction
junction_type                   AIR_JUNCTION
downstream_location             AIR_SPACE
upstream                                DW
downstream                              environment
```

```
has_filter                              false
flow_rate
Time    (hr)    Value   (cfm)
0.333           0.752
24              0.056
720             0.028
end_flow_rate
X_over_Q_4_ctrl_room
Time    (hr)    Value   (s/m*3)
2       7.02E-4
8       3.19E-4
24      1.30E-4
96      1.05E-4
720     9.00E-5
end_X_over_Q_4_ctrl_room
X_over_Q_4_site_boundary
Time    (hr)    Value   (s/m*3)
720     1.81e-4
end_X_over_Q_4_site_boundary
X_over_Q_4_low_population_zone
Time    (hr)    Value   (s/m*3)
8       4.95e-5
24      3.69e-5
96      1.95e-5
720     7.81e-6
end_X_over_Q_4_low_population_zone
end_junction

junction
junction_type                   AIR_JUNCTION
downstream_location             AIR_SPACE
upstream                                WW
downstream                              environment
has_filter                              false
flow_rate
Time (hr) Value (cfm)
0.333           0.541
24              0.04
720             0.02
end_flow_rate
X_over_Q_4_ctrl_room
Time    (hr)    Value   (s/m*3)
2       7.02E-4
8       3.19E-4
24      1.30E-4
96      1.05E-4
720     9.00E-5
end_X_over_Q_4_ctrl_room
X_over_Q_4_site_boundary
Time    (hr)    Value   (s/m*3)
720     1.81e-4
end_X_over_Q_4_site_boundary
X_over_Q_4_low_population_zone
Time    (hr)    Value   (s/m*3)
8       4.95e-5
24      3.69e-5
96      1.95e-5
720     7.81e-6
end_X_over_Q_4_low_population_zone
end_junction

junction
junction_type                   AIR_JUNCTION
downstream_location             AIR_SPACE
upstream                                SP
downstream                              RB
has_filter                              true
flow_rate
Time    (hr)    Value   (cfm)
0.25    0
```

```
720     0.268
end_flow_rate
filter_efficiency
Time    NobleGas        ElemIodine      OrgIodine       PartIodine      Solubles        Insolubles
720     0.5     0       0       0.99999 0       0
end_filter_efficiency
end_junction

junction
junction_type                   AIR_JUNCTION
downstream_location             AIR_SPACE
upstream                                RB
downstream                              environment
has_filter                              true
flow_rate
Time    (hr)    Value   (cfm)
720     5000
end_flow_rate
filter_efficiency
Time    NobleGas        ElemIodine      OrgIodine       PartIodine      Solubles        Insolubles
0.333   0       0       0       0       0       0
720     0       0.98    0.98    0.98    0.98    0.98
end_filter_efficiency
frac_4_daughter_resusp
Time    NobleGas        ElemIodine      OrgIodine       PartIodine      Solubles        Insolubles
720     1       1       0       0       0       0
end_frac_4_daughter_resusp
X_over_Q_4_ctrl_room
Time    (hr)    Value   (s/m*3)
0.333   7.02E-4
2       6.95E-4
8       3.36E-4
24      1.28E-4
96      9.72E-5
720     7.69E-5
end_X_over_Q_4_ctrl_room
X_over_Q_4_site_boundary
Time    (hr)    Value   (s/m*3)
720     1.81e-4
end_X_over_Q_4_site_boundary
X_over_Q_4_low_population_zone
Time    (hr)    Value   (s/m*3)
8       4.95e-5
24      3.69e-5
96      1.95e-5
720     7.81e-6
end_X_over_Q_4_low_population_zone
end_junction

junction
junction_type                   AIR_JUNCTION
downstream_location             AIR_SPACE
upstream                                environment
downstream                              Control_Room
has_filter                              false
flow_rate
Time    (hr)    Value   (cfm)
720     50
end_flow_rate
end_junction

junction
junction_type                   AIR_JUNCTION
downstream_location             AIR_SPACE
upstream                                Control_Room
downstream                              environment
has_filter                              false
flow_rate
Time    (hr)    Value   (cfm)
720     850
```

```
end_flow_rate
X_over_Q_4_ctrl_room
Time    (hr)    Value   (s/m*3)
720     0
end_X_over_Q_4_ctrl_room
X_over_Q_4_site_boundary
Time    (hr)    Value   (s/m*3)
720     0
end_X_over_Q_4_site_boundary
X_over_Q_4_low_population_zone
Time    (hr)    Value   (s/m*3)
720     0
end_X_over_Q_4_low_population_zone
end_junction

environment
breathing_rate_sb
Time (hr)       Value (cms)
8       0.00035
720     0.0
end_breathing_rate_sb
breathing_rate_lpz
Time (hr)       Value (cms)
8       0.00035
24      0.00018
720     0.00023
end_breathing_rate_lpz
end_environment
```

Control Room Filtered Intake Case, Max Intake, One CREF Failed:

```
edit_time
0.0 0.25 0.5 0.75 1.0 1.25 1.5 1.75 2.0 2.25 2.5 2.75 3.0 3.25 3.5 3.75 4.0 8.0 24.0 48.0 96.0 240.0 720.0
end_edit_time

participating_isotopes
Kr83m   Kr85m   Kr85    Kr87    Kr88    Kr89
Xe131m  Xe133m  Xe133   Xe135m  Xe135   Xe137   Xe138
I131Org I131Elem        I131Part
I132Org I132Elem        I132Part
I133Org I133Elem        I133Part
I134Org I134Elem        I134Part
I135Org I135Elem        I135Part
Rb86    Cs134   Cs136   Cs137
Sb127   Sb129   Te127m  Te127   Te129m  Te129   Te131m  Te132
Ba137m  Ba139   Ba140
Mo99    Tc99m   Ru103   Ru105   Ru106   Rh105
Y90     Y91     Y92     Y93     Zr95    Zr97    Nb95
La140   La141   La142   Pr143   Nd147   Am241   Cm242   Cm244
Ce141   Ce143   Ce144   Np239   Pu238   Pu239   Pu240   Pu241
Sr89    Sr90    Sr91    Sr92
end_participating_isotopes

core
thermal_power                   3556
elemental_iodine_frac           0.0485
organic_iodine_frac             0.0015
particulate_iodine_frac                 0.95
release_frac
to_control_volume DW
Time N_Gas I_Grp CsGrp TeGrp BaGrp NMtls CeGrp LaGrp SrGrp
0.033   0       0       0       0       0       0       0       0       0
0.533   0.1     0.1     0.1     0       0       0       0       0       0
2.033   0.633   0.167   0.133   0.033   0.0133  0.00167 0.00033 0.00013 0.0133
720     0       0       0       0       0       0       0       0       0
end_to_control_volume
to_control_volume SP
Time N_Gas I_Grp CsGrp TeGrp BaGrp NMtls CeGrp LaGrp SrGrp
```

```
0.033   0       0       0       0       0       0       0       0       0
0.533   0       0.2     0       0       0       0       0       0       0
2.033   0       0.334   0       0       0       0       0       0       0
720     0       0       0       0       0       0       0       0       0
end_to_control_volume
end_release_frac
end_core

control_volume
obj_type                                OBJ_CV
name                                    DW
air_volume                              2.0054e+005
water_volume                    0
surface_area                    1
has_recirc_filter                       false
removal_rate_to_surface
Time    NobleGas        ElemIodine      OrgIodine       PartIodine      Solubles        Insolubles
0.25    0.00    0.001   0.00    0.001   0.001   0.001
2.44    0.00    6.20    0.00    6.20    6.20    6.20
24.00   0.00    0.62    0.00    0.62    0.62    0.62
720.0   0.00    0.00    0.00    0.00    0.00    0.00
end_removal_rate_to_surface
frac_4_daughter_resusp_from_surface
Time    NobleGas        ElemIodine      OrgIodine       PartIodine      Solubles        Insolubles
720     1       0       0       0       0       0
end_frac_4_daughter_resusp_from_surface
end_control_volume

control_volume
obj_type                                OBJ_CV
name                                    WW
air_volume                              1.442e+005
water_volume                            1.373e+005
surface_area                            0
has_recirc_filter                       false
removal_rate_to_waterpool
Time    NobleGas        ElemIodine      OrgIodine       PartIodine      Solubles        Insolubles
720     0       0       0       0       0       0
end_removal_rate_to_waterpool
frac_4_daughter_resusp_from_water
Time    NobleGas        ElemIodine      OrgIodine       PartIodine      Solubles        Insolubles
720     0       0       0       0       0       0
end_frac_4_daughter_resusp_from_water
decontamination_factor
Time    NobleGas        ElemIodine      OrgIodine       PartIodine      Solubles        Insolubles
720     1       1       1       1       1       1
end_decontamination_factor
end_control_volume

control_volume
obj_type                                OBJ_CV
name                                    RB
air_volume                              5000
water_volume                            0
surface_area                            0
has_recirc_filter                       false
end_control_volume

control_volume
obj_type                                OBJ_CV
name                                    SP
air_volume                              1.373e+005
water_volume                            0
surface_area                            0
has_recirc_filter                       false
end_control_volume

control_volume
obj_type                                OBJ_CR
name                                    Control_Room
```

```
air_volume                          2.14e+005
water_volume                        0
surface_area                        0
has_recirc_filter                   false
breathing_rate
Time    (hr)    Value   (cms)
720             0.00035
end_breathing_rate
occupancy_factor
Time    (hr)    Value   (frac)
24              1
96              0.6
720             0.4
end_occupancy_factor
end_control_volume

junction
junction_type                   AIR_JUNCTION
downstream_location             AIR_SPACE
upstream                                CORE
downstream                              DW
has_filter                              false
flow_rate
Time    (hr)    Value   (cfm)
720             1
end_flow_rate
end_junction

junction
junction_type                   AIR_JUNCTION
downstream_location             AIR_SPACE
upstream                                CORE
downstream                              SP
has_filter                              false
flow_rate
Time    (hr)    Value   (cfm)
720             1
end_flow_rate
end_junction

junction
junction_type                   AIR_JUNCTION
downstream_location             WATER_POOL
upstream                                DW
downstream                              WW
has_filter                              false
flow_rate
Time    (hr)    Value   (cfm)
2.033           0
720             1.442e5
end_flow_rate
end_junction

junction
junction_type                   AIR_JUNCTION
downstream_location             AIR_SPACE
upstream                                WW
downstream                              DW
has_filter                              false
flow_rate
Time    (hr)    Value   (cfm)
2.033           0
720             1.442e5
end_flow_rate
end_junction

junction
junction_type                   AIR_JUNCTION
downstream_location             AIR_SPACE
upstream                                DW
```

```
downstream                          environment
has_filter                          false
flow_rate
Time    (hr)    Value   (cfm)
24      0.1384
720     0.0692
end_flow_rate
X_over_Q_4_ctrl_room
Time    (hr)    Value   (s/m*3)
2       7.83E-04
8       3.33E-04
24      1.72E-04
96      1.34E-04
720     1.28E-04
end_X_over_Q_4_ctrl_room
X_over_Q_4_site_boundary
Time    (hr)    Value   (s/m*3)
720     1.81e-4
end_X_over_Q_4_site_boundary
X_over_Q_4_low_population_zone
Time    (hr)    Value   (s/m*3)
8       4.95e-5
24      3.69e-5
96      1.95e-5
720     7.81e-6
end_X_over_Q_4_low_population_zone
end_junction

junction
junction_type                   AIR_JUNCTION
downstream_location             AIR_SPACE
upstream                            DW
downstream                          environment
has_filter                          true
flow_rate
Time    (hr)    Value   (cfm)
24      0.4152
720     0.2076
end_flow_rate
filter_efficiency
Time    NobleGas        ElemIodine      OrgIodine       PartIodine      Solubles        Insolubles
720     0               0.427           0.001           0.897           0.897           0.897
end_filter_efficiency
frac_4_daughter_resusp
Time    NobleGas        ElemIodine      OrgIodine       PartIodine      Solubles        Insolubles
720     1       0       0       0       0       0
end_frac_4_daughter_resusp
X_over_Q_4_ctrl_room
Time    (hr)    Value   (s/m*3)
2       7.83E-04
8       3.33E-04
24      1.72E-04
96      1.34E-04
720     1.28E-04
end_X_over_Q_4_ctrl_room
X_over_Q_4_site_boundary
Time    (hr)    Value   (s/m*3)
720     1.81e-4
end_X_over_Q_4_site_boundary
X_over_Q_4_low_population_zone
Time    (hr)    Value   (s/m*3)
8       4.95e-5
24      3.69e-5
96      1.95e-5
720     7.81e-6
end_X_over_Q_4_low_population_zone
end_junction

junction
junction_type                   AIR_JUNCTION
```

```
downstream_location                AIR_SPACE
upstream                                DW
downstream                              RB
has_filter                              false
flow_rate
Time    (hr)    Value   (cfm)
0.333           0
24              0.696
720             0.348
end_flow_rate
end_junction

junction
junction_type                   AIR_JUNCTION
downstream_location             AIR_SPACE
upstream                                WW
downstream                              RB
has_filter                              false
flow_rate
Time (hr) Value (cfm)
0.333           0
24              0.5
720             0.25
end_flow_rate
end_junction

junction
junction_type                   AIR_JUNCTION
downstream_location             AIR_SPACE
upstream                                DW
downstream                              environment
has_filter                              false
flow_rate
Time    (hr)    Value   (cfm)
0.333           0.752
24              0.056
720             0.028
end_flow_rate
X_over_Q_4_ctrl_room
Time    (hr)    Value   (s/m*3)
2       0.00029
8       0.0002225
24      0.0000899
96      0.00007615
720     0.0000656
end_X_over_Q_4_ctrl_room
X_over_Q_4_site_boundary
Time    (hr)    Value   (s/m*3)
720     1.81e-4
end_X_over_Q_4_site_boundary
X_over_Q_4_low_population_zone
Time    (hr)    Value   (s/m*3)
8       4.95e-5
24      3.69e-5
96      1.95e-5
720     7.81e-6
end_X_over_Q_4_low_population_zone
end_junction

junction
junction_type                   AIR_JUNCTION
downstream_location             AIR_SPACE
upstream                                WW
downstream                              environment
has_filter                              false
flow_rate
Time (hr) Value (cfm)
0.333           0.541
24              0.04
720             0.02
```

```
end_flow_rate
X_over_Q_4_ctrl_room
Time    (hr)    Value   (s/m*3)
2       0.00029
8       0.0002225
24      0.0000899
96      0.00007615
720     0.0000656
end_X_over_Q_4_ctrl_room
X_over_Q_4_site_boundary
Time    (hr)    Value   (s/m*3)
720     1.81e-4
end_X_over_Q_4_site_boundary
X_over_Q_4_low_population_zone
Time    (hr)    Value   (s/m*3)
8       4.95e-5
24      3.69e-5
96      1.95e-5
720     7.81e-6
end_X_over_Q_4_low_population_zone
end_junction

junction
junction_type                   AIR_JUNCTION
downstream_location             AIR_SPACE
upstream                                SP
downstream                              RB
has_filter                              true
flow_rate
Time    (hr)    Value   (cfm)
0.25    0
720     0.268
end_flow_rate
filter_efficiency
Time    NobleGas        ElemIodine      OrgIodine       PartIodine      Solubles        Insolubles
720     0.5     0       0       0.99999 0       0
end_filter_efficiency
end_junction

junction
junction_type                   AIR_JUNCTION
downstream_location             AIR_SPACE
upstream                                RB
downstream                              environment
has_filter                              true
flow_rate
Time    (hr)    Value   (cfm)
720     5000
end_flow_rate
filter_efficiency
Time    NobleGas        ElemIodine      OrgIodine       PartIodine      Solubles        Insolubles
0.333   0       0       0       0       0       0
720     0       0.98    0.98    0.98    0.98    0.98
end_filter_efficiency
frac_4_daughter_resusp
Time    NobleGas        ElemIodine      OrgIodine       PartIodine      Solubles        Insolubles
720     1       1       0       0       0       0
end_frac_4_daughter_resusp
X_over_Q_4_ctrl_room
Time    (hr)    Value   (s/m*3)
0.333   2.90E-04
2       1.47E-04
8       1.08E-04
24      4.25E-05
96      3.61E-05
720     3.10E-05
end_X_over_Q_4_ctrl_room
X_over_Q_4_site_boundary
Time    (hr)    Value   (s/m*3)
720     1.81e-4
```

```
end_X_over_Q_4_site_boundary
X_over_Q_4_low_population_zone
Time    (hr)    Value   (s/m*3)
8       4.95e-5
24      3.69e-5
96      1.95e-5
720     7.81e-6
end_X_over_Q_4_low_population_zone
end_junction

junction
junction_type                   AIR_JUNCTION
downstream_location             AIR_SPACE
upstream                                environment
downstream                              Control_Room
has_filter                              true
flow_rate
Time    (hr)    Value   (cfm)
720     900
end_flow_rate
filter_efficiency
Time    NobleGas        ElemIodine      OrgIodine       PartIodine      Solubles        Insolubles
720     0       0.95    0.95    0.99    0.99    0.99
end_filter_efficiency
frac_4_daughter_resusp
Time    NobleGas        ElemIodine      OrgIodine       PartIodine      Solubles        Insolubles
720     1       1       0       0       0       0
end_frac_4_daughter_resusp
end_junction

junction
junction_type                   AIR_JUNCTION
downstream_location             AIR_SPACE
upstream                                Control_Room
downstream                              environment
has_filter                              false
flow_rate
Time    (hr)    Value   (cfm)
720     950
end_flow_rate
X_over_Q_4_ctrl_room
Time    (hr)    Value   (s/m*3)
720     0
end_X_over_Q_4_ctrl_room
X_over_Q_4_site_boundary
Time    (hr)    Value   (s/m*3)
720     0
end_X_over_Q_4_site_boundary
X_over_Q_4_low_population_zone
Time    (hr)    Value   (s/m*3)
720     0
end_X_over_Q_4_low_population_zone
end_junction

environment
breathing_rate_sb
Time (hr)       Value (cms)
8       0.00035
720     0.0
end_breathing_rate_sb
breathing_rate_lpz
Time (hr)       Value (cms)
8       0.00035
24      0.00018
720     0.00023
end_breathing_rate_lpz
end_environment
```

Control Room Unfiltered Inleakage Case, Max Intake, One CREF Failed:

```
edit_time
0.0 0.25 0.5 0.75 1.0 1.25 1.5 1.75 2.0 2.25 2.5 2.75 3.0 3.25 3.5 3.75 4.0 8.0 24.0 48.0 96.0 240.0 720.0
end_edit_time

participating_isotopes
Kr83m   Kr85m   Kr85    Kr87    Kr88    Kr89
Xe131m  Xe133m  Xe133   Xe135m  Xe135   Xe137   Xe138
I131Org I131Elem        I131Part
I132Org I132Elem        I132Part
I133Org I133Elem        I133Part
I134Org I134Elem        I134Part
I135Org I135Elem        I135Part
Rb86    Cs134   Cs136   Cs137
Sb127   Sb129   Te127m  Te127   Te129m  Te129   Te131m  Te132
Ba137m  Ba139   Ba140
Mo99    Tc99m   Ru103   Ru105   Ru106   Rh105
Y90     Y91     Y92     Y93     Zr95    Zr97    Nb95
La140   La141   La142   Pr143   Nd147   Am241   Cm242   Cm244
Ce141   Ce143   Ce144   Np239   Pu238   Pu239   Pu240   Pu241
Sr89    Sr90    Sr91    Sr92
end_participating_isotopes

core
thermal_power                   3556
elemental_iodine_frac           0.0485
organic_iodine_frac             0.0015
particulate_iodine_frac                 0.95
release_frac
to_control_volume DW
Time N_Gas I_Grp CsGrp TeGrp BaGrp NMtls CeGrp LaGrp SrGrp
0.033   0       0       0       0       0       0       0       0       0
0.533   0.1     0.1     0.1     0       0       0       0       0       0
2.033   0.633   0.167   0.133   0.033   0.0133  0.00167 0.00033 0.00013 0.0133
720     0       0       0       0       0       0       0       0       0
end_to_control_volume
to_control_volume SP
Time N_Gas I_Grp CsGrp TeGrp BaGrp NMtls CeGrp LaGrp SrGrp
0.033   0       0       0       0       0       0       0       0       0
0.533   0       0.2     0       0       0       0       0       0       0
2.033   0       0.334   0       0       0       0       0       0       0
720     0       0       0       0       0       0       0       0       0
end_to_control_volume
end_release_frac
end_core

control_volume
obj_type                                OBJ_CV
name                                    DW
air_volume                              2.0054e+005
water_volume                    0
surface_area                    1
has_recirc_filter                       false
removal_rate_to_surface
Time    NobleGas        ElemIodine      OrgIodine       PartIodine      Solubles        Insolubles
0.25    0.00    0.001   0.00    0.001   0.001   0.001
2.44    0.00    6.20    0.00    6.20    6.20    6.20
24.00   0.00    0.62    0.00    0.62    0.62    0.62
720.0   0.00    0.00    0.00    0.00    0.00    0.00
end_removal_rate_to_surface
frac_4_daughter_resusp_from_surface
Time    NobleGas        ElemIodine      OrgIodine       PartIodine      Solubles        Insolubles
720     1       0       0       0       0       0
end_frac_4_daughter_resusp_from_surface
end_control_volume

control_volume
obj_type                                OBJ_CV
name                                    WW
air_volume                              1.442e+005
water_volume                            1.373e+005
```

```
surface_area                              0
has_recirc_filter                         false
removal_rate_to_waterpool
Time    NobleGas        ElemIodine      OrgIodine       PartIodine      Solubles        Insolubles
720     0       0       0       0       0       0
end_removal_rate_to_waterpool
frac_4_daughter_resusp_from_water
Time    NobleGas        ElemIodine      OrgIodine       PartIodine      Solubles        Insolubles
720     0       0       0       0       0       0
end_frac_4_daughter_resusp_from_water
decontamination_factor
Time    NobleGas        ElemIodine      OrgIodine       PartIodine      Solubles        Insolubles
720     1       1       1       1       1       1
end_decontamination_factor
end_control_volume

control_volume
obj_type                                  OBJ_CV
name                                      RB
air_volume                                5000
water_volume                              0
surface_area                              0
has_recirc_filter                         false
end_control_volume

control_volume
obj_type                                  OBJ_CV
name                                      SP
air_volume                                1.373e+005
water_volume                              0
surface_area                              0
has_recirc_filter                         false
end_control_volume

control_volume
obj_type                                  OBJ_CR
name                                      Control_Room
air_volume                                2.14e+005
water_volume                              0
surface_area                              0
has_recirc_filter                         false
breathing_rate
Time    (hr)    Value   (cms)
720             0.00035
end_breathing_rate
occupancy_factor
Time    (hr)    Value   (frac)
24              1
96              0.6
720             0.4
end_occupancy_factor
end_control_volume

junction
junction_type                     AIR_JUNCTION
downstream_location               AIR_SPACE
upstream                                  CORE
downstream                                DW
has_filter                                false
flow_rate
Time    (hr)    Value   (cfm)
720             1
end_flow_rate
end_junction

junction
junction_type                     AIR_JUNCTION
downstream_location               AIR_SPACE
upstream                                  CORE
downstream                                SP
```

```
has_filter                              false
flow_rate
Time    (hr)    Value   (cfm)
720             1
end_flow_rate
end_junction

junction
junction_type                   AIR_JUNCTION
downstream_location             WATER_POOL
upstream                                DW
downstream                              WW
has_filter                              false
flow_rate
Time    (hr)    Value   (cfm)
2.033           0
720             1.442e5
end_flow_rate
end_junction

junction
junction_type                   AIR_JUNCTION
downstream_location             AIR_SPACE
upstream                                WW
downstream                              DW
has_filter                              false
flow_rate
Time    (hr)    Value   (cfm)
2.033           0
720             1.442e5
end_flow_rate
end_junction

junction
junction_type                   AIR_JUNCTION
downstream_location             AIR_SPACE
upstream                                DW
downstream                              environment
has_filter                              false
flow_rate
Time    (hr)    Value   (cfm)
24      0.1384
720     0.0692
end_flow_rate
X_over_Q_4_ctrl_room
Time    (hr)    Value   (s/m*3)
2       4.70e-3
8       2.00e-3
24      1.03e-3
96      8.01e-4
720     7.69e-4
end_X_over_Q_4_ctrl_room
X_over_Q_4_site_boundary
Time    (hr)    Value   (s/m*3)
720     1.81e-4
end_X_over_Q_4_site_boundary
X_over_Q_4_low_population_zone
Time    (hr)    Value   (s/m*3)
8       4.95e-5
24      3.69e-5
96      1.95e-5
720     7.81e-6
end_X_over_Q_4_low_population_zone
end_junction

junction
junction_type                   AIR_JUNCTION
downstream_location             AIR_SPACE
upstream                                DW
downstream                              environment
```

```
has_filter                                  true
flow_rate
Time    (hr)    Value   (cfm)
24      0.4152
720     0.2076
end_flow_rate
filter_efficiency
Time    NobleGas        ElemIodine      OrgIodine       PartIodine      Solubles        Insolubles
720     0               0.427           0.001           0.897           0.897           0.897
end_filter_efficiency
frac_4_daughter_resusp
Time    NobleGas        ElemIodine      OrgIodine       PartIodine      Solubles        Insolubles
720     1       0       0       0       0       0
end_frac_4_daughter_resusp
X_over_Q_4_ctrl_room
Time    (hr)    Value   (s/m*3)
2       4.70e-3
8       2.00e-3
24      1.03e-3
96      8.01e-4
720     7.69e-4
end_X_over_Q_4_ctrl_room
X_over_Q_4_site_boundary
Time    (hr)    Value   (s/m*3)
720     1.81e-4
end_X_over_Q_4_site_boundary
X_over_Q_4_low_population_zone
Time    (hr)    Value   (s/m*3)
8       4.95e-5
24      3.69e-5
96      1.95e-5
720     7.81e-6
end_X_over_Q_4_low_population_zone
end_junction

junction
junction_type                   AIR_JUNCTION
downstream_location             AIR_SPACE
upstream                                DW
downstream                              RB
has_filter                              false
flow_rate
Time    (hr)    Value   (cfm)
0.333           0
24              0.696
720             0.348
end_flow_rate
end_junction

junction
junction_type                   AIR_JUNCTION
downstream_location             AIR_SPACE
upstream                                WW
downstream                              RB
has_filter                              false
flow_rate
Time (hr) Value (cfm)
0.333           0
24              0.5
720             0.25
end_flow_rate
end_junction

junction
junction_type                   AIR_JUNCTION
downstream_location             AIR_SPACE
upstream                                DW
downstream                              environment
has_filter                              false
flow_rate
```

```
Time    (hr)    Value   (cfm)
0.333           0.752
24              0.056
720             0.028
end_flow_rate
X_over_Q_4_ctrl_room
Time    (hr)    Value   (s/m*3)
2       7.02E-4
8       3.19E-4
24      1.30E-4
96      1.05E-4
720     9.00E-5
end_X_over_Q_4_ctrl_room
X_over_Q_4_site_boundary
Time    (hr)    Value   (s/m*3)
720     1.81e-4
end_X_over_Q_4_site_boundary
X_over_Q_4_low_population_zone
Time    (hr)    Value   (s/m*3)
8       4.95e-5
24      3.69e-5
96      1.95e-5
720     7.81e-6
end_X_over_Q_4_low_population_zone
end_junction

junction
junction_type                   AIR_JUNCTION
downstream_location             AIR_SPACE
upstream                                WW
downstream                              environment
has_filter                              false
flow_rate
Time (hr) Value (cfm)
0.333           0.541
24              0.04
720             0.02
end_flow_rate
X_over_Q_4_ctrl_room
Time    (hr)    Value   (s/m*3)
2       7.02E-4
8       3.19E-4
24      1.30E-4
96      1.05E-4
720     9.00E-5
end_X_over_Q_4_ctrl_room
X_over_Q_4_site_boundary
Time    (hr)    Value   (s/m*3)
720     1.81e-4
end_X_over_Q_4_site_boundary
X_over_Q_4_low_population_zone
Time    (hr)    Value   (s/m*3)
8       4.95e-5
24      3.69e-5
96      1.95e-5
720     7.81e-6
end_X_over_Q_4_low_population_zone
end_junction

junction
junction_type                   AIR_JUNCTION
downstream_location             AIR_SPACE
upstream                                SP
downstream                              RB
has_filter                              true
flow_rate
Time    (hr)    Value   (cfm)
0.25    0
720     0.268
end_flow_rate
```

```
filter_efficiency
Time    NobleGas        ElemIodine      OrgIodine       PartIodine      Solubles        Insolubles
720     0.5     0       0       0.99999 0       0
end_filter_efficiency
end_junction

junction
junction_type                   AIR_JUNCTION
downstream_location             AIR_SPACE
upstream                                RB
downstream                              environment
has_filter                              true
flow_rate
Time    (hr)    Value   (cfm)
720     5000
end_flow_rate
filter_efficiency
Time    NobleGas        ElemIodine      OrgIodine       PartIodine      Solubles        Insolubles
0.333   0       0       0       0       0       0
720     0       0.98    0.98    0.98    0.98    0.98
end_filter_efficiency
frac_4_daughter_resusp
Time    NobleGas        ElemIodine      OrgIodine       PartIodine      Solubles        Insolubles
720     1       1       0       0       0       0
end_frac_4_daughter_resusp
X_over_Q_4_ctrl_room
Time    (hr)    Value   (s/m*3)
0.333   7.02E-4
2       6.95E-4
8       3.36E-4
24      1.28E-4
96      9.72E-5
720     7.69E-5
end_X_over_Q_4_ctrl_room
X_over_Q_4_site_boundary
Time    (hr)    Value   (s/m*3)
720     1.81e-4
end_X_over_Q_4_site_boundary
X_over_Q_4_low_population_zone
Time    (hr)    Value   (s/m*3)
8       4.95e-5
24      3.69e-5
96      1.95e-5
720     7.81e-6
end_X_over_Q_4_low_population_zone
end_junction

junction
junction_type                   AIR_JUNCTION
downstream_location             AIR_SPACE
upstream                                environment
downstream                              Control_Room
has_filter                              false
flow_rate
Time    (hr)    Value   (cfm)
720     50
end_flow_rate
end_junction

junction
junction_type                   AIR_JUNCTION
downstream_location             AIR_SPACE
upstream                                Control_Room
downstream                              environment
has_filter                              false
flow_rate
Time    (hr)    Value   (cfm)
720     950
end_flow_rate
X_over_Q_4_ctrl_room
```

```
Time    (hr)    Value   (s/m*3)
720     0
end_X_over_Q_4_ctrl_room
X_over_Q_4_site_boundary
Time    (hr)    Value   (s/m*3)
720     0
end_X_over_Q_4_site_boundary
X_over_Q_4_low_population_zone
Time    (hr)    Value   (s/m*3)
720     0
end_X_over_Q_4_low_population_zone
end_junction

environment
breathing_rate_sb
Time (hr)       Value (cms)
8       0.00035
720     0.0
end_breathing_rate_sb
breathing_rate_lpz
Time (hr)       Value (cms)
8       0.00035
24      0.00018
720     0.00023
end_breathing_rate_lpz
end_environment
```

ENERGY NORTHWEST People · Vision · Solutions	Appendix B STARDOSE "LIBFILE1.TXT" FILE	Page No. B-1	Cont'd on page B-2
		Calculation No. NE-02-04-05	
Prepared by / Date: JSm 7/21/04	Verified by/Date: BCH 7-25-04	Revision No. 0	

n_isotopes 76 n_isotope_groups 11

Kr83m	N_Gas	NONE	NONE	3.57E+03	1.04E-04	0	1.49E-05	0	0	0	0	0	0	0	0	0										
Kr85m	N_Gas	NONE	NONE	7.35E+03	4.39E-05	0	2.77E-02	0	0	0.05	0	0.22	0	0	0	0	0									
Kr85	N_Gas	NONE	NONE	4.11E+02	2.04E-09	0	4.40E-04	0	0	0.05	0	0.22	0	0	0	0	0									
Kr87	N_Gas	NONE	NONE	1.34E+04	1.52E-04	0	1.52E-01	0	0	0.34	0	1.48	0	0	0	0	0									
Kr88	N_Gas	NONE	NONE	1.90E+04	6.88E-05	0	3.77E-01	0	0	0.08	0	0.35	0	0	0	0	0									
Kr89	N_Gas	NONE	NONE	2.20E+04	3.63E-03	0	3.23E-01	0	0	0.35	0	1.52	0	0	0	0	0									
Xe131m	N_Gas	NONE	NONE	2.79E+02	6.68E-07	0	1.49E-03	0	0	0.02	0	0.04	0	0	0	0	0									
Xe133m	N_Gas	NONE	NONE	1.66E+03	3.49E-06	0	5.07E-03	0	0	0.03	0	0.13	0	0	0	0	0									
Xe133	N_Gas	I133Part		NONE	5.43E+04	1.52E-06	0	5.77E-03	0	0	0.01	0	0.04	0	0	0	0	0									
Xe135m	N_Gas	NONE	NONE	1.11E+04	7.40E-04	0	7.55E-02	0	0	0.02	0	0.09	0	0	0	0	0									
Xe135	N_Gas	I135Part		NONE	1.31E+04	2.09E-05	0	4.40E-02	0	0	0.06	0	0.26	0	0	0	0	0									
Xe137	N_Gas	NONE	NONE	4.65E+04	2.96E-03	0	3.03E-02	0	0	0.46	0	2	0	0	0	0	0									
Xe138	N_Gas	NONE	NONE	3.59E+04	6.80E-04	0	1.99E-01	0	0	0.15	0	0.65	0	0	0	0	0									
I131Org	Org_I	NONE	NONE	2.79E+04	9.96E-07	1.08E+06	6.73E-02	0	0	0.03	3.29E+04	0.13	0	0	0	0	0									
I132Org	Org_I	NONE	NONE	3.94E+04	8.27E-05	6.44E+03	4.14E-01	0	0	0.11	3.81E+02	0.48	0	0	0	0	0									
I133Org	Org_I	NONE	NONE	5.44E+04	9.22E-06	1.80E+05	1.09E-01	0	0	0.09	5.85E+03	0.39	0	0	0	0	0									
I134Org	Org_I	NONE	NONE	6.03E+04	2.23E-04	1.07E+03	4.81E-01	0	0	0.14	1.31E+02	0.61	0	0	0	0	0									
I135Org	Org_I	NONE	NONE	5.03E+04	2.86E-05	3.13E+04	3.07E-01	0	0	0.08	1.23E+03	0.35	0	0	0	0	0									
I131Elem		Elm_I	Te131m	NONE	2.79E+04	9.96E-07	1.08E+06	6.73E-02	0	0	0.03	3.29E+04	0.13	0	0	0	0	0									
I132Elem		Elm_I	Te132	NONE	3.94E+04	8.27E-05	6.44E+03	4.14E-01	0	0	0.11	3.81E+02	0.48	0	0	0	0	0									
I133Elem		Elm_I	NONE	NONE	5.44E+04	9.22E-06	1.80E+05	1.09E-01	0	0	0.09	5.85E+03	0.39	0	0	0	0	0									
I134Elem		Elm_I	NONE	NONE	6.03E+04	2.23E-04	1.07E+03	4.81E-01	0	0	0.14	1.31E+02	0.61	0	0	0	0	0									
I135Elem		Elm_I	NONE	NONE	5.03E+04	2.86E-05	3.13E+04	3.07E-01	0	0	0.08	1.23E+03	0.35	0	0	0	0	0									
I131Part		Prt_I	NONE	NONE	2.79E+04	9.96E-07	1.08E+06	6.73E-02	0	0	0.03	3.29E+04	0.13	0	0	0	0	0									
I132Part		Prt_I	NONE	NONE	3.94E+04	8.27E-05	6.44E+03	4.14E-01	0	0	0.11	3.81E+02	0.48	0	0	0	0	0									
I133Part		Prt_I	NONE	Xe133	5.44E+04	9.22E-06	1.80E+05	1.09E-01	0	0	0.09	5.85E+03	0.39	0	0	0	0	0									
I134Part		Prt_I	NONE	NONE	6.03E+04	2.23E-04	1.07E+03	4.81E-01	0	0	0.14	1.31E+02	0.61	0	0	0	0	0									
I135Part		Prt_I	NONE	Xe135	5.03E+04	2.86E-05	3.13E+04	3.07E-01	0	0	0.08	1.23E+03	0.35	0	0	0	0	0									
Rb86	CsGrp	NONE	NONE	4.47E+01	4.29E-07	4.92E+03	1.78E-02	0	0	0	6.62E+03	0	0	0	0	0	0									
Cs134	CsGrp	NONE	NONE	6.27E+03	9.55E-09	4.11E+04	2.80E-01	0	0	0	4.63E+04	0	0	0	0	0	0									
Cs136	CsGrp	NONE	NONE	1.39E+03	6.16E-07	6.40E+03	3.92E-01	0	0	0	7.33E+03	0	0	0	0	0	0									
Cs137	CsGrp	NONE	Ba137m	5.05E+03	7.30E-10	2.93E+04	1.01E-01	0	0	0	3.19E+04	0	0	0	0	0	0									
Sb127	TeGrp	NONE	Te127	3.31E+03	2.07E-06	2.28E+02	1.23E-01	0	0	0	6.03E+03	0	0	0	0	0	0									
Sb129	TeGrp	NONE	Te129	9.48E+03	4.42E-05	3.60E+01	2.64E-01	0	0	0	6.44E+02	0	0	0	0	0	0									
Te127m	TeGrp	NONE	NONE	4.66E+02	7.64E-08	3.57E+02	5.44E-04	0	0	0	2.15E+04	0	0	0	0	0	0									
Te127	TeGrp	Sb127	NONE	3.31E+03	2.06E-05	6.81E+00	8.95E-04	0	0	0	3.18E+02	0	0	0	0	0	0									
Te129m	TeGrp	NONE	NONE	1.39E+03	2.36E-07	5.78E+02	1.23E-02	0	0	0	2.40E+04	0	0	0	0	0	0									
Te129	TeGrp	Sb129	NONE	8.90E+03	1.57E-04	1.88E+00	1.02E-02	0	0	0	7.73E+01	0	0	0	0	0	0									
Te131m	TeGrp	NONE	I131Elem	4.20E+03	6.42E-06	1.36E+05	2.76E-01	0	0	0	6.50E+03	0	0	0	0	0	0									
Te132	TeGrp	NONE	I132Elem	3.99E+04	2.51E-06	2.32E+05	3.81E-02	0	0	0	9.44E+03	0	0	0	0	0	0									
Ba137m	BaGrp	Cs137	NONE	3.01E+03	4.53E-03	0	0	0	0	0	0	0	0	0	0	0	0									
Ba139	BaGrp	NONE	NONE	4.72E+04	1.39E-04	8.88E+00	8.03E-03	0	0	0	1.72E+02	0	0	0	0	0	0									
Ba140	BaGrp	NONE	La140	4.58E+04	6.27E-07	9.47E+02	3.17E-02	0	0	0	3.74E+03	0	0	0	0	0	0									
Mo99	NMtls	NONE	Tc99m	4.90E+04	2.87E-06	5.62E+01	2.69E-02	0	0	0	3.96E+03	0	0	0	0	0	0									
Tc99m	NMtls	Mo99	NONE	4.34E+04	3.18E-05	1.85E+02	2.18E-02	0	0	0	3.26E+01	0	0	0	0	0	0									
Ru103	NMtls	NONE	NONE	4.70E+04	2.03E-07	9.51E+02	8.33E-02	0	0	0	8.96E+03	0	0	0	0	0	0									
Ru105	NMtls	NONE	Rh105	3.46E+04	4.22E-05	1.54E+01	1.41E-01	0	0	0	4.55E+02	0	0	0	0	0	0									
Ru106	NMtls	NONE	NONE	2.04E+04	2.20E-08	6.36E+03	3.85E-02	0	0	0	4.77E+05	0	0	0	0	0	0									
Rh105	NMtls	Ru105	NONE	3.27E+04	5.40E-06	1.07E+01	1.38E-02	0	0	0	9.55E+02	0	0	0	0	0	0									

Y90	LaGrp	Sr90	NONE	2.04E+03	2.99E-06	1.91E+00	7.03E-04	0	0	0	8.44E+03	0	0	0	0	0	0
Y91	LaGrp	Sr91	NONE	2.73E+04	1.38E-07	3.15E+01	9.62E-04	0	0	0	4.88E+04	0	0	0	0	0	0
Y92	LaGrp	Sr92	NONE	2.90E+04	5.35E-05	3.89E+00	4.81E-02	0	0	0	7.81E+02	0	0	0	0	0	0
Y93	LaGrp	NONE	NONE	3.56E+04	1.91E-05	3.43E+00	1.78E-02	0	0	0	2.15E+03	0	0	0	0	0	0
Zr95	LaGrp	NONE	Nb95	4.27E+04	1.27E-07	5.33E+03	1.33E-01	0	0	0	2.36E+04	0	0	0	0	0	0
Zr97	LaGrp	NONE	NONE	4.33E+04	1.13E-05	8.57E+01	1.64E-01	0	0	0	4.33E+03	0	0	0	0	0	0
Nb95	LaGrp	Zr95	NONE	4.27E+04	2.29E-07	1.32E+03	1.38E-01	0	0	0	5.81E+03	0	0	0	0	0	0
La140	LaGrp	Ba140	NONE	4.71E+04	4.77E-06	2.54E+02	4.33E-01	0	0	0	4.85E+03	0	0	0	0	0	0
La141	LaGrp	NONE	Ce141	4.36E+04	4.94E-05	3.48E+01	8.84E-03	0	0	0	8.44E+02	0	0	0	0	0	0
La142	LaGrp	NONE	NONE	4.17E+04	1.26E-04	3.23E+01	5.33E-01	0	0	0	2.53E+02	0	0	0	0	0	0
Pr143	LaGrp	Ce143	NONE	3.78E+04	5.85E-07	6.22E-06	7.77E-05	0	0	0	8.10E+03	0	0	0	0	0	0
Nd147	LaGrp	NONE	NONE	1.71E+04	7.10E-07	6.73E+01	2.29E-02	0	0	0	6.85E+03	0	0	0	0	0	0
Am241	LaGrp	NONE	NONE	7.67E+00	4.80E-11	5.92E+03	3.03E-03	0	0	0	4.44E+08	0	0	0	0	0	0
Cm242	LaGrp	NONE	NONE	1.74E+03	4.94E-08	3.48E+03	2.11E-05	0	0	0	1.73E+07	0	0	0	0	0	0
Cm244	LaGrp	NONE	NONE	1.41E+02	1.25E-09	3.74E+03	1.82E-05	0	0	0	2.48E+08	0	0	0	0	0	0
Ce141	CeGrp	La141	NONE	4.43E+04	2.51E-07	9.44E+01	1.27E-02	0	0	0	8.95E+03	0	0	0	0	0	0
Ce143	CeGrp	NONE	Pr143	4.01E+04	6.03E-06	2.31E+01	4.77E-02	0	0	0	3.39E+03	0	0	0	0	0	0
Ce144	CeGrp	NONE	NONE	3.25E+04	2.77E-08	1.08E+03	1.03E-02	0	0	0	3.74E+05	0	0	0	0	0	0
Np239	CeGrp	NONE	NONE	7.01E+05	3.44E-06	2.82E+01	2.85E-02	0	0	0	2.51E+03	0	0	0	0	0	0
Pu238	CeGrp	NONE	NONE	9.56E+01	2.40E-10	1.43E+03	1.81E-05	0	0	0	2.88E+08	0	0	0	0	0	0
Pu239	CeGrp	NONE	NONE	1.89E+01	9.00E-13	1.39E+03	1.57E-05	0	0	0	3.08E+08	0	0	0	0	0	0
Pu240	CeGrp	NONE	NONE	3.11E+01	3.30E-12	1.39E+03	1.76E-05	0	0	0	3.08E+08	0	0	0	0	0	0
Pu241	CeGrp	NONE	NONE	8.85E+03	1.67E-09	3.39E+01	2.68E-07	0	0	0	4.96E+06	0	0	0	0	0	0
Sr89	SrGrp	NONE	NONE	2.02E+04	1.59E-07	2.95E+01	2.86E-04	0	0	0	4.14E+04	0	0	0	0	0	0
Sr90	SrGrp	NONE	Y90	3.34E+03	8.00E-10	9.95E+02	2.79E-05	0	0	0	1.30E+06	0	0	0	0	0	0
Sr91	SrGrp	NONE	Y91	2.59E+04	2.01E-05	3.67E+01	1.82E-01	0	0	0	1.68E+03	0	0	0	0	0	0
Sr92	SrGrp	NONE	Y92	3.01E+04	7.29E-05	1.45E+01	2.51E-01	0	0	0	8.07E+02	0	0	0	0	0	0

Control Room Filtered Intake Case, Min Intake, 2 Trains CREF Indefinitely:

Control_Room

	thyroid	wbody	skin	CEDE
Total dose:	4.08E+000	3.03E-001	5.59E+000	1.78E-001
Noble gas	0.00E+000	2.93E-001	5.54E+000	0.00E+000
Org iodine	8.60E-001	3.23E-005	2.72E-004	2.65E-002
Elem iodine	2.23E+000	9.65E-003	4.77E-002	9.62E-002
Part iodine	9.42E-001	1.04E-004	7.39E-004	2.94E-002
Cesium	8.91E-003	9.30E-006	0.00E+000	9.92E-003
Tellurium	3.30E-002	2.34E-006	0.00E+000	1.59E-003
Barium	6.08E-005	3.30E-007	0.00E+000	2.42E-004
Noble metal	3.28E-005	2.73E-007	0.00E+000	1.84E-003
Lanthanides	5.11E-006	3.59E-007	0.00E+000	1.02E-003
Cerium	2.08E-006	1.17E-007	0.00E+000	3.55E-003
Strontinum	6.78E-006	1.40E-006	0.00E+000	7.38E-003

environment

	thyroid	wbody	skin	CEDE
EAB dose:	6.15E+001	1.58E+001	2.02E+001	3.12E+000
LPZ dose:	2.48E+001	2.74E+000	2.74E+000	1.11E+000

	thyrd_eab	wbody_eab	skin_eab	CEDE_eab	thyrd_lpz	wbody_lpz	skin_lpz	CEDE_lpz
Noble gas	0.00E+000	1.48E+001	1.99E+001	0.00E+000	0.00E+000	2.61E+000	2.70E+000	0.00E+000
Org iodine	3.62E+000	2.12E-002	9.98E-003	1.13E-001	3.47E+000	3.50E-003	1.59E-003	1.07E-001
Elem iodine	8.51E+000	8.68E-001	2.40E-001	2.73E-001	7.77E+000	9.07E-002	2.54E-002	2.48E-001
Part iodine	4.73E+001	1.47E-001	5.17E-002	1.48E+000	1.30E+001	4.02E-002	1.41E-002	4.09E-001
Cesium	4.46E-001	8.86E-003	0.00E+000	4.96E-001	1.23E-001	2.40E-003	0.00E+000	1.37E-001
Tellurium	1.62E+000	2.41E-003	0.00E+000	7.82E-002	4.48E-001	6.56E-004	0.00E+000	2.16E-002
Barium	2.94E-003	3.22E-004	0.00E+000	1.18E-002	8.14E-004	8.70E-005	0.00E+000	3.27E-003
Noble metal	1.58E-003	2.73E-004	0.00E+000	8.87E-002	4.37E-004	7.39E-005	0.00E+000	2.46E-002
Lanthanides	2.14E-004	1.93E-004	0.00E+000	4.81E-002	5.99E-005	4.62E-005	0.00E+000	1.34E-002
Cerium	1.01E-004	1.10E-004	0.00E+000	1.71E-001	2.80E-005	2.98E-005	0.00E+000	4.74E-002
Strontinum	3.40E-004	1.71E-003	0.00E+000	3.55E-001	9.41E-005	4.68E-004	0.00E+000	9.84E-002

STARDOSE 1.01 (c) 1996-2002 Polestar Applied Technology, Inc.
Tue Jun 29 16:53:53 2004

Control Room Unfiltered Inleakage Case, Min Intake, 2 Trains CREF Indefinitely:

Control_Room

	thyroid	wbody	skin	CEDE
Total dose:	5.20E+001	1.06E-001	1.87E+000	2.62E+000
Noble gas	0.00E+000	9.99E-002	1.84E+000	0.00E+000
Org iodine	7.52E+000	2.87E-004	2.41E-003	2.31E-001
Elem iodine	5.83E+000	1.19E-003	6.97E-003	1.83E-001
Part iodine	3.69E+001	4.03E-003	2.87E-002	1.15E+000
Cesium	3.45E-001	3.60E-004	0.00E+000	3.84E-001
Tellurium	1.40E+000	9.99E-005	0.00E+000	6.77E-002
Barium	2.59E-003	1.40E-005	0.00E+000	1.03E-002
Noble metal	1.40E-003	1.16E-005	0.00E+000	7.83E-002
Lanthanides	2.16E-004	1.51E-005	0.00E+000	4.33E-002
Cerium	8.85E-005	4.96E-006	0.00E+000	1.51E-001
Strontinum	2.88E-004	6.02E-005	0.00E+000	3.14E-001

environment

	thyroid	wbody	skin	CEDE
EAB dose:	6.15E+001	1.58E+001	2.02E+001	3.12E+000
LPZ dose:	2.48E+001	2.74E+000	2.74E+000	1.11E+000

	thyrd_eab	wbody_eab	skin_eab	CEDE_eab	thyrd_lpz	wbody_lpz	skin_lpz	CEDE_lpz
Noble gas	0.00E+000	1.48E+001	1.99E+001	0.00E+000	0.00E+000	2.61E+000	2.70E+000	0.00E+000
Org iodine	3.62E+000	2.12E-002	9.98E-003	1.13E-001	3.47E+000	3.50E-003	1.59E-003	1.07E-001
Elem iodine	8.51E+000	8.68E-001	2.40E-001	2.73E-001	7.77E+000	9.07E-002	2.54E-002	2.48E-001
Part iodine	4.73E+001	1.47E-001	5.17E-002	1.48E+000	1.30E+001	4.02E-002	1.41E-002	4.09E-001
Cesium	4.46E-001	8.86E-003	0.00E+000	4.96E-001	1.23E-001	2.40E-003	0.00E+000	1.37E-001
Tellurium	1.62E+000	2.41E-003	0.00E+000	7.82E-002	4.48E-001	6.56E-004	0.00E+000	2.16E-002
Barium	2.94E-003	3.22E-004	0.00E+000	1.18E-002	8.14E-004	8.70E-005	0.00E+000	3.27E-003
Noble metal	1.58E-003	2.73E-004	0.00E+000	8.87E-002	4.37E-004	7.39E-005	0.00E+000	2.46E-002
Lanthanides	2.14E-004	1.93E-004	0.00E+000	4.81E-002	5.99E-005	4.62E-005	0.00E+000	1.34E-002
Cerium	1.01E-004	1.10E-004	0.00E+000	1.71E-001	2.80E-005	2.98E-005	0.00E+000	4.74E-002
Strontinum	3.40E-004	1.71E-003	0.00E+000	3.55E-001	9.41E-005	4.68E-004	0.00E+000	9.84E-002

STARDOSE 1.01 (c) 1996-2002 Polestar Applied Technology, Inc.
Tue Jun 29 16:44:53 2004

Control Room Filtered Intake Case, Min Intake, Normal CREF:

Control_Room

	thyroid	wbody	skin	CEDE
Total dose:	4.76E+000	3.34E-001	6.43E+000	2.07E-001
Noble gas	0.00E+000	3.22E-001	6.37E+000	0.00E+000
Org iodine	1.18E+000	3.89E-005	3.36E-004	3.64E-002
Elem iodine	2.54E+000	1.20E-002	5.91E-002	1.12E-001
Part iodine	9.89E-001	1.06E-004	7.58E-004	3.09E-002
Cesium	9.39E-003	9.80E-006	0.00E+000	1.05E-002
Tellurium	3.50E-002	2.44E-006	0.00E+000	1.69E-003
Barium	6.47E-005	3.50E-007	0.00E+000	2.58E-004
Noble metal	3.50E-005	2.87E-007	0.00E+000	1.96E-003
Lanthanides	5.60E-006	4.22E-007	0.00E+000	1.09E-003
Cerium	2.21E-006	1.23E-007	0.00E+000	3.78E-003
Strontinum	7.18E-006	1.43E-006	0.00E+000	7.87E-003

environment

	thyroid	wbody	skin	CEDE
EAB dose:	6.15E+001	1.58E+001	2.02E+001	3.12E+000
LPZ dose:	2.48E+001	2.74E+000	2.74E+000	1.11E+000

	thyrd_eab	wbody_eab	skin_eab	CEDE_eab	thyrd_lpz	wbody_lpz	skin_lpz	CEDE_lpz
Noble gas	0.00E+000	1.48E+001	1.99E+001	0.00E+000	0.00E+000	2.61E+000	2.70E+000	0.00E+000
Org iodine	3.62E+000	2.12E-002	9.98E-003	1.13E-001	3.47E+000	3.50E-003	1.59E-003	1.07E-001
Elem iodine	8.51E+000	8.68E-001	2.40E-001	2.73E-001	7.77E+000	9.07E-002	2.54E-002	2.48E-001
Part iodine	4.73E+001	1.47E-001	5.17E-002	1.48E+000	1.30E+001	4.02E-002	1.41E-002	4.09E-001
Cesium	4.46E-001	8.86E-003	0.00E+000	4.96E-001	1.23E-001	2.40E-003	0.00E+000	1.37E-001
Tellurium	1.62E+000	2.41E-003	0.00E+000	7.82E-002	4.48E-001	6.56E-004	0.00E+000	2.16E-002
Barium	2.94E-003	3.22E-004	0.00E+000	1.18E-002	8.14E-004	8.70E-005	0.00E+000	3.27E-003
Noble metal	1.58E-003	2.73E-004	0.00E+000	8.87E-002	4.37E-004	7.39E-005	0.00E+000	2.46E-002
Lanthanides	2.14E-004	1.93E-004	0.00E+000	4.81E-002	5.99E-005	4.62E-005	0.00E+000	1.34E-002
Cerium	1.01E-004	1.10E-004	0.00E+000	1.71E-001	2.80E-005	2.98E-005	0.00E+000	4.74E-002
Strontinum	3.40E-004	1.71E-003	0.00E+000	3.55E-001	9.41E-005	4.68E-004	0.00E+000	9.84E-002

STARDOSE 1.01 (c) 1996-2002 Polestar Applied Technology, Inc.
Tue Jun 29 04:51:16 2004

Control Room Unfiltered Inleakage Case, Min Intake, Normal CREF:

Control_Room

	thyroid	wbody	skin	CEDE
Total dose:	5.49E+001	1.10E-001	1.99E+000	2.76E+000
Noble gas	0.00E+000	1.04E-001	1.95E+000	0.00E+000
Org iodine	8.15E+000	3.03E-004	2.56E-003	2.51E-001
Elem iodine	6.18E+000	1.17E-003	6.93E-003	1.94E-001
Part iodine	3.87E+001	4.11E-003	2.94E-002	1.21E+000
Cesium	3.63E-001	3.78E-004	0.00E+000	4.04E-001
Tellurium	1.48E+000	1.04E-004	0.00E+000	7.14E-002
Barium	2.74E-003	1.48E-005	0.00E+000	1.09E-002
Noble metal	1.48E-003	1.22E-005	0.00E+000	8.29E-002
Lanthanides	2.35E-004	1.75E-005	0.00E+000	4.60E-002
Cerium	9.36E-005	5.22E-006	0.00E+000	1.60E-001
Strontinum	3.04E-004	6.13E-005	0.00E+000	3.32E-001

environment

	thyroid	wbody	skin	CEDE
EAB dose:	6.15E+001	1.58E+001	2.02E+001	3.12E+000
LPZ dose:	2.48E+001	2.74E+000	2.74E+000	1.11E+000

	thyrd_eab	wbody_eab	skin_eab	CEDE_eab	thyrd_lpz	wbody_lpz	skin_lpz	CEDE_lpz
Noble gas	0.00E+000	1.48E+001	1.99E+001	0.00E+000	0.00E+000	2.61E+000	2.70E+000	0.00E+000
Org iodine	3.62E+000	2.12E-002	9.98E-003	1.13E-001	3.47E+000	3.50E-003	1.59E-003	1.07E-001
Elem iodine	8.51E+000	8.68E-001	2.40E-001	2.73E-001	7.77E+000	9.07E-002	2.54E-002	2.48E-001
Part iodine	4.73E+001	1.47E-001	5.17E-002	1.48E+000	1.30E+001	4.02E-002	1.41E-002	4.09E-001
Cesium	4.46E-001	8.86E-003	0.00E+000	4.96E-001	1.23E-001	2.40E-003	0.00E+000	1.37E-001
Tellurium	1.62E+000	2.41E-003	0.00E+000	7.82E-002	4.48E-001	6.56E-004	0.00E+000	2.16E-002
Barium	2.94E-003	3.22E-004	0.00E+000	1.18E-002	8.14E-004	8.70E-005	0.00E+000	3.27E-003
Noble metal	1.58E-003	2.73E-004	0.00E+000	8.87E-002	4.37E-004	7.39E-005	0.00E+000	2.46E-002
Lanthanides	2.14E-004	1.93E-004	0.00E+000	4.81E-002	5.99E-005	4.62E-005	0.00E+000	1.34E-002
Cerium	1.01E-004	1.10E-004	0.00E+000	1.71E-001	2.80E-005	2.98E-005	0.00E+000	4.74E-002
Strontinum	3.40E-004	1.71E-003	0.00E+000	3.55E-001	9.41E-005	4.68E-004	0.00E+000	9.84E-002

STARDOSE 1.01 (c) 1996-2002 Polestar Applied Technology, Inc.
Tue Jun 29 04:54:52 2004

Control Room Filtered Intake Case, Min Intake, One CREF Failed:

Control_Room

	thyroid	wbody	skin	CEDE
Total dose:	5.22E+000	3.37E-001	6.50E+000	2.28E-001
Noble gas	0.00E+000	3.26E-001	6.44E+000	0.00E+000
Org iodine	1.27E+000	4.42E-005	3.80E-004	3.90E-002
Elem iodine	2.58E+000	1.11E-002	5.50E-002	1.11E-001
Part iodine	1.30E+000	1.25E-004	9.18E-004	4.07E-002
Cesium	1.25E-002	1.30E-005	0.00E+000	1.39E-002
Tellurium	4.79E-002	3.24E-006	0.00E+000	2.31E-003
Barium	8.92E-005	4.79E-007	0.00E+000	3.55E-004
Noble metal	4.84E-005	3.85E-007	0.00E+000	2.71E-003
Lanthanides	8.06E-006	6.70E-007	0.00E+000	1.51E-003
Cerium	3.05E-006	1.69E-007	0.00E+000	5.23E-003
Strontinum	9.79E-006	1.79E-006	0.00E+000	1.09E-002

environment

	thyroid	wbody	skin	CEDE
EAB dose:	6.15E+001	1.58E+001	2.02E+001	3.12E+000
LPZ dose:	2.48E+001	2.74E+000	2.74E+000	1.11E+000

	thyrd_eab	wbody_eab	skin_eab	CEDE_eab	thyrd_lpz	wbody_lpz	skin_lpz	CEDE_lpz
Noble gas	0.00E+000	1.48E+001	1.99E+001	0.00E+000	0.00E+000	2.61E+000	2.70E+000	0.00E+000
Org iodine	3.62E+000	2.12E-002	9.98E-003	1.13E-001	3.47E+000	3.50E-003	1.59E-003	1.07E-001
Elem iodine	8.51E+000	8.68E-001	2.40E-001	2.73E-001	7.77E+000	9.07E-002	2.54E-002	2.48E-001
Part iodine	4.73E+001	1.47E-001	5.17E-002	1.48E+000	1.30E+001	4.02E-002	1.41E-002	4.09E-001
Cesium	4.46E-001	8.86E-003	0.00E+000	4.97E-001	1.23E-001	2.40E-003	0.00E+000	1.37E-001
Tellurium	1.62E+000	2.41E-003	0.00E+000	7.82E-002	4.48E-001	6.56E-004	0.00E+000	2.16E-002
Barium	2.94E-003	3.22E-004	0.00E+000	1.18E-002	8.14E-004	8.70E-005	0.00E+000	3.27E-003
Noble metal	1.58E-003	2.73E-004	0.00E+000	8.87E-002	4.37E-004	7.39E-005	0.00E+000	2.46E-002
Lanthanides	2.14E-004	1.93E-004	0.00E+000	4.81E-002	5.99E-005	4.62E-005	0.00E+000	1.34E-002
Cerium	1.01E-004	1.10E-004	0.00E+000	1.71E-001	2.80E-005	2.98E-005	0.00E+000	4.74E-002
Strontinum	3.40E-004	1.71E-003	0.00E+000	3.55E-001	9.41E-005	4.68E-004	0.00E+000	9.84E-002

STARDOSE 1.01 (c) 1996-2002 Polestar Applied Technology, Inc.
Mon Jun 28 23:01:10 2004

Control Room Unfiltered Inleakage Case, Min Intake, One CREF Failed:

Control_Room

	thyroid	wbody	skin	CEDE
Total dose:	5.50E+001	9.88E-002	1.84E+000	2.78E+000
Noble gas	0.00E+000	9.31E-002	1.81E+000	0.00E+000
Org iodine	7.94E+000	2.79E-004	2.39E-003	2.44E-001
Elem iodine	6.16E+000	1.13E-003	6.70E-003	1.93E-001
Part iodine	3.90E+001	3.73E-003	2.74E-002	1.22E+000
Cesium	3.71E-001	3.87E-004	0.00E+000	4.13E-001
Tellurium	1.49E+000	1.01E-004	0.00E+000	7.18E-002
Barium	2.77E-003	1.49E-005	0.00E+000	1.10E-002
Noble metal	1.50E-003	1.20E-005	0.00E+000	8.42E-002
Lanthanides	2.50E-004	2.07E-005	0.00E+000	4.70E-002
Cerium	9.46E-005	5.24E-006	0.00E+000	1.62E-001
Strontinum	3.04E-004	5.58E-005	0.00E+000	3.37E-001

environment

	thyroid	wbody	skin	CEDE
EAB dose:	6.15E+001	1.58E+001	2.02E+001	3.12E+000
LPZ dose:	2.48E+001	2.74E+000	2.74E+000	1.11E+000

	thyrd_eab	wbody_eab	skin_eab	CEDE_eab	thyrd_lpz	wbody_lpz	skin_lpz	CEDE_lpz
Noble gas	0.00E+000	1.48E+001	1.99E+001	0.00E+000	0.00E+000	2.61E+000	2.70E+000	0.00E+000
Org iodine	3.62E+000	2.12E-002	9.98E-003	1.13E-001	3.47E+000	3.50E-003	1.59E-003	1.07E-001
Elem iodine	8.51E+000	8.68E-001	2.40E-001	2.73E-001	7.77E+000	9.07E-002	2.54E-002	2.48E-001
Part iodine	4.73E+001	1.47E-001	5.17E-002	1.48E+000	1.30E+001	4.02E-002	1.41E-002	4.09E-001
Cesium	4.46E-001	8.86E-003	0.00E+000	4.97E-001	1.23E-001	2.40E-003	0.00E+000	1.37E-001
Tellurium	1.62E+000	2.41E-003	0.00E+000	7.82E-002	4.48E-001	6.56E-004	0.00E+000	2.16E-002
Barium	2.94E-003	3.22E-004	0.00E+000	1.18E-002	8.14E-004	8.70E-005	0.00E+000	3.27E-003
Noble metal	1.58E-003	2.73E-004	0.00E+000	8.87E-002	4.37E-004	7.39E-005	0.00E+000	2.46E-002
Lanthanides	2.14E-004	1.93E-004	0.00E+000	4.81E-002	5.99E-005	4.62E-005	0.00E+000	1.34E-002
Cerium	1.01E-004	1.10E-004	0.00E+000	1.71E-001	2.80E-005	2.98E-005	0.00E+000	4.74E-002
Strontinum	3.40E-004	1.71E-003	0.00E+000	3.55E-001	9.41E-005	4.68E-004	0.00E+000	9.84E-002

STARDOSE 1.01 (c) 1996-2002 Polestar Applied Technology, Inc.
Mon Jun 28 22:50:13 2004

Control Room Filtered Intake Case, Max Intake, One CREF Failed:

Control_Room

	thyroid	wbody	skin	CEDE
Total dose:	4.92E+000	3.29E-001	6.28E+000	2.15E-001
Noble gas	0.00E+000	3.18E-001	6.22E+000	0.00E+000
Org iodine	1.16E+000	4.12E-005	3.52E-004	3.57E-002
Elem iodine	2.50E+000	1.08E-002	5.33E-002	1.08E-001
Part iodine	1.21E+000	1.20E-004	8.72E-004	3.77E-002
Cesium	1.15E-002	1.20E-005	0.00E+000	1.28E-002
Tellurium	4.39E-002	3.01E-006	0.00E+000	2.12E-003
Barium	8.16E-005	4.38E-007	0.00E+000	3.24E-004
Noble metal	4.41E-005	3.55E-007	0.00E+000	2.48E-003
Lanthanides	7.23E-006	5.78E-007	0.00E+000	1.38E-003
Cerium	2.79E-006	1.55E-007	0.00E+000	4.77E-003
Strontinum	8.98E-006	1.69E-006	0.00E+000	9.91E-003

environment

	thyroid	wbody	skin	CEDE
EAB dose:	6.15E+001	1.58E+001	2.02E+001	3.12E+000
LPZ dose:	2.48E+001	2.74E+000	2.74E+000	1.11E+000

	thyrd_eab	wbody_eab	skin_eab	CEDE_eab	thyrd_lpz	wbody_lpz	skin_lpz	CEDE_lpz
Noble gas	0.00E+000	1.48E+001	1.99E+001	0.00E+000	0.00E+000	2.61E+000	2.70E+000	0.00E+000
Org iodine	3.62E+000	2.12E-002	9.98E-003	1.13E-001	3.47E+000	3.50E-003	1.59E-003	1.07E-001
Elem iodine	8.51E+000	8.68E-001	2.40E-001	2.73E-001	7.77E+000	9.07E-002	2.54E-002	2.48E-001
Part iodine	4.73E+001	1.47E-001	5.17E-002	1.48E+000	1.30E+001	4.02E-002	1.41E-002	4.09E-001
Cesium	4.46E-001	8.86E-003	0.00E+000	4.97E-001	1.23E-001	2.40E-003	0.00E+000	1.37E-001
Tellurium	1.62E+000	2.41E-003	0.00E+000	7.82E-002	4.48E-001	6.56E-004	0.00E+000	2.16E-002
Barium	2.94E-003	3.22E-004	0.00E+000	1.18E-002	8.14E-004	8.70E-005	0.00E+000	3.27E-003
Noble metal	1.58E-003	2.73E-004	0.00E+000	8.87E-002	4.37E-004	7.39E-005	0.00E+000	2.46E-002
Lanthanides	2.14E-004	1.93E-004	0.00E+000	4.81E-002	5.99E-005	4.62E-005	0.00E+000	1.34E-002
Cerium	1.01E-004	1.10E-004	0.00E+000	1.71E-001	2.80E-005	2.98E-005	0.00E+000	4.74E-002
Strontinum	3.40E-004	1.71E-003	0.00E+000	3.55E-001	9.41E-005	4.68E-004	0.00E+000	9.84E-002

STARDOSE 1.01 (c) 1996-2002 Polestar Applied Technology, Inc.
Tue Jun 29 05:42:22 2004

Control Room Unfiltered Inleakage Case, Max Intake, One CREF Failed:

Control_Room

	thyroid	wbody	skin	CEDE
Total dose:	4.95E+001	9.17E-002	1.69E+000	2.50E+000
Noble gas	0.00E+000	8.64E-002	1.65E+000	0.00E+000
Org iodine	7.14E+000	2.56E-004	2.18E-003	2.20E-001
Elem iodine	5.54E+000	1.04E-003	6.17E-003	1.74E-001
Part iodine	3.51E+001	3.47E-003	2.53E-002	1.10E+000
Cesium	3.32E-001	3.47E-004	0.00E+000	3.70E-001
Tellurium	1.34E+000	9.18E-005	0.00E+000	6.46E-002
Barium	2.48E-003	1.34E-005	0.00E+000	9.87E-003
Noble metal	1.34E-003	1.08E-005	0.00E+000	7.54E-002
Lanthanides	2.20E-004	1.75E-005	0.00E+000	4.20E-002
Cerium	8.49E-005	4.72E-006	0.00E+000	1.45E-001
Strontinum	2.74E-004	5.19E-005	0.00E+000	3.02E-001

environment

	thyroid	wbody	skin	CEDE
EAB dose:	6.15E+001	1.58E+001	2.02E+001	3.12E+000
LPZ dose:	2.48E+001	2.74E+000	2.74E+000	1.11E+000

	thyrd_eab	wbody_eab	skin_eab	CEDE_eab	thyrd_lpz	wbody_lpz	skin_lpz	CEDE_lpz
Noble gas	0.00E+000	1.48E+001	1.99E+001	0.00E+000	0.00E+000	2.61E+000	2.70E+000	0.00E+000
Org iodine	3.62E+000	2.12E-002	9.98E-003	1.13E-001	3.47E+000	3.50E-003	1.59E-003	1.07E-001
Elem iodine	8.51E+000	8.68E-001	2.40E-001	2.73E-001	7.77E+000	9.07E-002	2.54E-002	2.48E-001
Part iodine	4.73E+001	1.47E-001	5.17E-002	1.48E+000	1.30E+001	4.02E-002	1.41E-002	4.09E-001
Cesium	4.46E-001	8.86E-003	0.00E+000	4.97E-001	1.23E-001	2.40E-003	0.00E+000	1.37E-001
Tellurium	1.62E+000	2.41E-003	0.00E+000	7.82E-002	4.48E-001	6.56E-004	0.00E+000	2.16E-002
Barium	2.94E-003	3.22E-004	0.00E+000	1.18E-002	8.14E-004	8.70E-005	0.00E+000	3.27E-003
Noble metal	1.58E-003	2.73E-004	0.00E+000	8.87E-002	4.37E-004	7.39E-005	0.00E+000	2.46E-002
Lanthanides	2.14E-004	1.93E-004	0.00E+000	4.81E-002	5.99E-005	4.62E-005	0.00E+000	1.34E-002
Cerium	1.01E-004	1.10E-004	0.00E+000	1.71E-001	2.80E-005	2.98E-005	0.00E+000	4.74E-002
Strontinum	3.40E-004	1.71E-003	0.00E+000	3.55E-001	9.41E-005	4.68E-004	0.00E+000	9.84E-002

STARDOSE 1.01 (c) 1996-2002 Polestar Applied Technology, Inc.
Tue Jun 29 05:30:16 2004

Hour	CEDE	WB	TEDE	Hour	2-hr delta
0.25	0.286	0.038	0.324		
0.5	0.577	0.094	0.671		
0.75	0.776	0.176	0.952		
1	1.05	0.341	1.391		
1.25	1.35	0.571	1.921		
1.5	1.65	0.855	2.505		
1.75	1.95	1.19	3.14		
2	2.26	1.56	3.82	0	3.82
2.25	2.42	1.88	4.3	0.25	3.976
2.5	2.49	2.17	4.66	0.5	3.989
2.75	2.55	2.44	4.99	0.75	4.038
3	2.59	2.7	5.29	1	3.899
3.25	2.64	2.94	5.58	1.25	3.659
3.5	2.68	3.17	5.85	1.5	3.345
3.75	2.72	3.39	6.11	1.75	2.97
4	2.76	3.6	6.36	2	2.54

Breakdown

	CEDE	WB	TEDE
0.75	2.55	2.44	4.99
2.75	0.776	0.176	0.952
2 hr delta	1.774	2.264	4.038

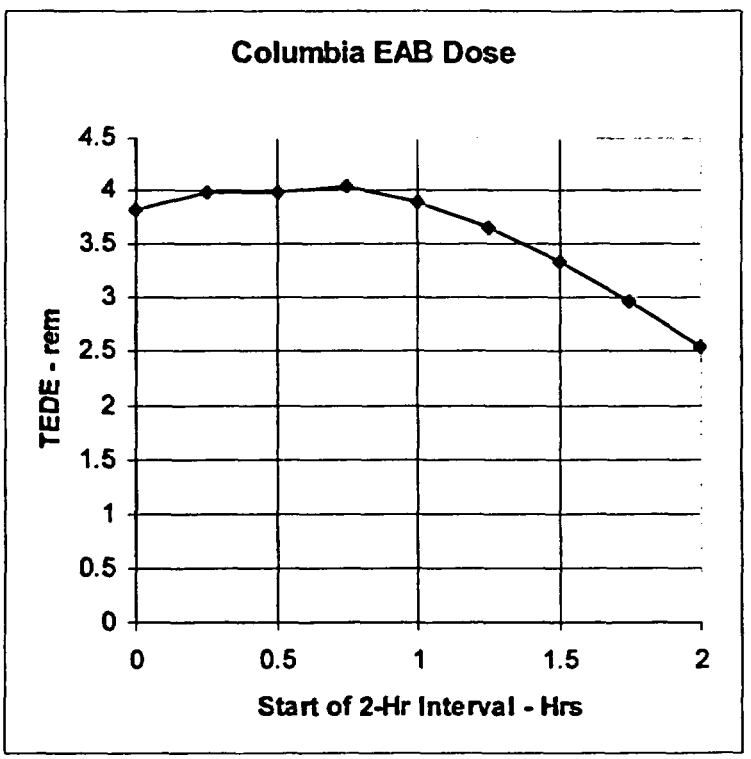

```
edit time 2.440000

DW

             air_space  water_pool  surface    recirc     thyroid    wbody      skin       CEDE
Cs137        5.09E+004  0.00E+000   4.39E+006  0.00E+000  0.00E+000  0.00E+000  0.00E+000  0.00E+000

WW
             air_space  water_pool  surface    recirc     thyroid    wbody      skin       CEDE
Cs137        3.88E+004  0.00E+000   0.00E+000  0.00E+000  0.00E+000  0.00E+000  0.00E+000  0.00E+000

Total Cs137 in DW and WW at t = 2.44 hours = 8.97E4 Ci

Total Cs137 released = 5.05E3 Ci/MWt x 3556 MWt x 0.25 = 4.49E6 Ci

Fraction remaining at 2.44 hours = 8.97E4/4.49E6 = 0.02
```

The RADTRAD computer code (main body Reference 5) was used to perform a check calculation for the minimum flow case, a single failure of one CREF train to start (single train operation). Note that due to known code imperfections or due to the fact that RADTRAD is less flexible than STARDOSE, it was necessary to adapt the plant model to that specific code to be able to perform runs equivalent to those performed with STARDOSE.

Multiple-Pathways-to-Environment Issue

Each release pathway to the environment was treated separately and control room and offsite doses were added up in the end. Note that for each of these single leakage pathway runs, the other releases were not removed, but diverted to a "dummy" volume instead of the environment, so that the remaining activity in each of the control volumes was correctly evaluated.

There is one set of X/Qs for each of these pathways, and in RADTRAD the control room X/Qs are linked to the control room volume, not to the release pathway, as it is the case in STARDOSE. This means that to use different sets of X/Qs, different runs are needed.

ESF Release

As explained in the main body of the calculation, ESF leakage is treated in STARDOSE by putting twice as much iodine activity (but iodine only) in the suppression pool as in the drywell, and filtering out all the particulate form so that the iodine release into the reactor building amounts to 10% of the initial iodine inventory, but only gaseous iodine (elemental and organic).

Unfortunately, it is not possible to do so in RADTRAD. Indeed, the only way to model a release from the core into a control volume is to direct a fraction of an entire core inventory file to that specific volume. Moreover, the code accepts only one inventory file at a time. One option would have been to have doubled the initial core inventory and to have directed 50% of it to the drywell and 50% of it to the suppression pool. However, this option would have put noble gases in the suppression pool control volume in addition to the iodine and other particle isotopes. While the latter isotopes can be filtered out when modeling the leakage to the reactor building, noble gases cannot be removed. Therefore, this option was abandoned, as it would have tripled the noble gas inventory in the problem. (Note that some noble gases are actually produced, resulting from decay of iodine isotopes in the suppression pool, but there should not be any noble gases in the suppression pool at the outset.)

Consequently, a specific nuclide inventory file (named COLUMBIAESF.NIF) was prepared. It includes iodine isotopes (with inventory doubled to reach the 10% release level) and all other isotopes to respect the parent-daughter relationships of the original file (but with inventories set to zero). Two additional RADTRAD runs were then performed with this specific "ESF" inventory released to the suppression pool and leaking into the RB so as to take into account its impact on offsite and control room doses. Two runs were necessary because while there was only one release pathway to be accounted for (SGTS release through the stack), there were still two control room X/Q sets to be used (one filtered and one unfiltered).

Deposition in the Intact Steam Lines

The easiest way to model aerosol and iodine deposition in the three intact steam lines would have been to use the Brockmann and Bixler models "as is", that is to say using the "pipe" feature built in RADTRAD. However, it was desired

to use well-mixed flow rather than plug flow, and we chose to model steam line deposition as filters with efficiencies calculated as previously explained in the main body of the calculation.

Edit Time Issue

In order to retrieve accurate dose results, it appeared essential to request a high number of time edits when preparing the RADTRAD input files, especially in the first few hours into the event. Several test runs for the failed steam line release pathway (biggest contributor to the control room dose) were performed using different set of requested edit times in the first four hours into the event (during which most of the changes in input parameters take place) and the differences in dose results appeared significant (several percent).

Since the RADTRAD output file size is not too big (except when requesting detailed information in control volumes), the choice was made to use one edit time every 0.05 hour in the first four hours of the analysis.

Edit Time Frequency chosen for the RADTRAD runs:

Table F-1 – RADTRAD Edit Times

Time Frame	Elapsed Time Between Edits
0 – 4 hr	0.05 hr
4 – 8 hr	0.5 hr
8 – 24 hr	1 hr
24 – 48 hr	2 hr
48 – 720 hr	24 hr

Dose Conversion Factors

60 isotopes are used in RADTRAD instead of 66 in STARDOSE (see Assumption 1 of the calculation main body). For example, the following eight isotopes are included in the STARDOSE Libfile1.txt file but not in the equivalent RADTRAD nuclide information file: Kr83m, Kr89, Xe131m, Xe133m, Xe135m, Xe137, Xe138, and Ba137m. Two insignificant Cobalt isotopes are included in the RADTRAD input but not in STARDOSE: Co58 and Co60. However, as the core inventory for Columbia did not show these two cobalt isotopes, their inventories were set to zero in the RADTRAD nuclide information file (COLUMBIA.NIF). As for the 58 others, their inventories were set according to the Design Input section of the main body of the calculation.

The Dose Conversion Factor file used in the RADTRAD calculation is base on the Federal Guide Reports 11 and 12 (FGR11&12.INP). Further discussion on this matter is provided in the Results section.

Calculation

To complete the check calculation, RADTRAD was run ten times as follows:

Table F-2 – RADTRAD Cases

Run #	Dose Contributors	Control Room Inflow
1f	Leakage through Failed Steam Line	Filtered
1u	Leakage through Failed Steam Line	Unfiltered
2f	Leakage through three Intact Steam Lines	Filtered
2u	Leakage through three Intact Steam Lines	Unfiltered
3f	Secondary Containment Bypass	Filtered
3u	Secondary Containment Bypass	Unfiltered
4f	Containment Leakage through SGTS	Filtered
4u	Containment Leakage through SGTS	Unfiltered
5f	ESF Iodine Release through SGTS	Filtered
5u	ESF Iodine Release through SGTS	Unfiltered

Control Room Dose Calculation:

To obtain the final control room TEDE, one needs to add up the control room TEDEs of all ten single runs.

Offsite Dose Calculation:

Since differences between a filtered run ("f") and an unfiltered run ("u") are only related to the control room model, offsite dose results are identical. Consequently, to obtain the offsite dose results one would need to add doses of only five runs corresponding to five different pathways (e.g. "1f" + "2f" + "3f" + "4f" + "5f").

Matrix of Runs and Input Files:

Table F-3 – RADTRAD Cases

Run #	Nuclide Inventory File	Initial Location of Inventory	Release Pathways to the Environment								CR X/Q Set	CR Inflow	CR Outflow
			Failed SL		Intact SLs		SCN Bypass		SGTS Release				
			From	To	From	To	From	To	From	To			
1f	columbia.nif	DW	DW	Enviro	DW	Dummy	DW&WW	Dummy	RB	Dummy	TB_f	F	F+U
1u	columbia.nif	DW	DW	Enviro	DW	Dummy	DW&WW	Dummy	RB	Dummy	TB_u	U	F+U
2f	columbia.nif	DW	DW	Dummy	DW	Enviro	DW&WW	Dummy	RB	Dummy	TB_f	F	F+U
2u	columbia.nif	DW	DW	Dummy	DW	Enviro	DW&WW	Dummy	RB	Dummy	TB_u	U	F+U
3f	columbia.nif	DW	DW	Dummy	DW	Dummy	DW&WW	Enviro	RB	Dummy	SCN_f	F	F+U
3u	columbia.nif	DW	DW	Dummy	DW	Dummy	DW&WW	Enviro	RB	Dummy	SCN_u	U	F+U
4f	columbia.nif	DW	DW	Dummy	DW	Dummy	DW&WW	Dummy	RB	Enviro	SGT_f	F	F+U
4u	columbia.nif	DW	DW	Dummy	DW	Dummy	DW&WW	Dummy	RB	Enviro	SGT_u	U	F+U
5f	columbiaesf.nif	SP	DW	Dummy	DW	Dummy	DW&WW	Dummy	RB	Enviro	SGT_f	F	F+U
5u	columbiaesf.nif	SP	DW	Dummy	DW	Dummy	DW&WW	Dummy	RB	Enviro	SGT_u	U	F+U

Input and Output files related to these RADTRAD runs are provided at the end of this report as follows:

Appendix F1 This appendix provides that Nuclide Information Files (COLUMBIA.NIF & COLUMBIAESF.NIF)
Appendix F2 This appendix provides the file detailing the Release Fraction and Timing for Columbia (COLUMBIA.RTF)
Appendix F3 This appendix provides the default Dose Conversion Factor file (FGR11&12.INP)
Appendix F4 This appendix provides the Columbia .PSF main input files ("1f" through "5u")
Appendix F5 This appendix provides excerpts from the RADTRAD output files for Columbia
Appendix F6 This appendix provides the two-hour EAB dose calculation spreadsheet for the Columbia RADTRAD runs

Results

Table F-4 – RADTRAD Results

Run #	Dose Contributor	Control Room Inleakage	30-d CR TEDE (rem)	Max 2-h EAB TEDE* (rem)	30-d LPZ TEDE** (rem)
1f	Failed SL	Filtered	0.12		0.61
1u	Failed SL	Unfiltered	1.77		
2f	Intact SLs	Filtered	0.21		0.79
2u	Intact SLs	Unfiltered	0.82		
3f	SCN Bypass	Filtered	0.03		0.43
3u	SCN Bypass	Unfiltered	0.19		
4f	Cont. (SGTS)	Filtered	0.09		1.58
4u	Cont. (SGTS)	Unfiltered	0.05		
5f	ESF (SGTS)	Filtered	0.03		0.43
5u	ESF (SGTS)	Unfiltered	0.07		
Total	All Pathways	Both	3.38	4.08	3.83

*See Appendix F6

**Same for both "f" and "u" runs – only one set used

The RADTRAD results for the control room are slightly less than those of STARDOSE (3.38 rem TEDE vs. 3.44 rem TEDE). However, the difference is only 1.7%, well within the acceptance criterion of 5% from Reference 1 for qualifying RADTRAD. For the EAB and LPZ doses, the differences (4.08 rem TEDE for RADTRAD vs. 4.04 rem TEDE for STARDOSE and 3.83 rem TEDE for RADTRAD vs. 3.85 rem TEDE for STARDOSE, respectively) are even less. Consequently, one can be assured that the RADTRAD check calculation confirms the STARDOSE results.

Conclusion

The dose analysis contained in this report demonstrates that the Columbia Generating Station meets the radiological criteria described in 10CFR Part 50.67 for the EAB, LPZ and for the control room. The EAB and LPZ doses represent only a small fraction of their respective dose limits. As for the control room, the conditions imposed by the DBA-LOCA event would not subject the most exposed operator to a dose in excess of the 5 Rem TEDE limit over a period of 30 days. Although this calculation does not address gamma "shine" doses from sources outside the control room, Reference 17 and Attachment 3 of the main calculation show that such doses are negligible.

COLUMBIA.NIF

```
Nuclide Inventory Name:
 Normalized Columbia 3556 MWth BWR Core Inventory
 Power Level:
  0.1000E+01
 Nuclides:
  60
 Nuclide 001:
 Co-58
   7
  0.6117120000E+07
  0.5800E+02
  0.0000E+00
 none      0.0000E+00
 none      0.0000E+00
 none      0.0000E+00
 Nuclide 002:
 Co-60
   7
  0.1663401096E+09
  0.6000E+02
  0.0000E+00
 none      0.0000E+00
 none      0.0000E+00
 none      0.0000E+00
 Nuclide 003:
 Kr-85
   1
  0.3382974720E+09
  0.8500E+02
  0.4110E+03
 none      0.0000E+00
 none      0.0000E+00
 none      0.0000E+00
 Nuclide 004:
 Kr-85m
   1
  0.1612800000E+05
  0.8500E+02
  0.7350E+04
 Kr-85     0.2100E+00
 none      0.0000E+00
 none      0.0000E+00
 Nuclide 005:
 Kr-87
   1
  0.4578000000E+04
  0.8700E+02
  0.1340E+05
 Rb-87     0.1000E+01
 none      0.0000E+00
 none      0.0000E+00
 Nuclide 006:
 Kr-88
   1
  0.1022400000E+05
  0.8800E+02
  0.1900E+05
 Rb-88     0.1000E+01
 none      0.0000E+00
 none      0.0000E+00
 Nuclide 007:
 Rb-86
   3
  0.1612224000E+07
  0.8600E+02
  0.4470E+02
 none      0.0000E+00
 none      0.0000E+00
```

```
none      0.0000E+00
Nuclide 008:
Sr-89
  5
 0.4363200000E+07
 0.8900E+02
 0.2020E+05
none      0.0000E+00
none      0.0000E+00
none      0.0000E+00
Nuclide 009:
Sr-90
  5
 0.9189573120E+09
 0.9000E+02
 0.3340E+04
Y-90      0.1000E+01
none      0.0000E+00
none      0.0000E+00
Nuclide 010:
Sr-91
  5
 0.3420000000E+05
 0.9100E+02
 0.2590E+05
Y-91m     0.5800E+00
Y-91      0.4200E+00
none      0.0000E+00
Nuclide 011:
Sr-92
  5
 0.9756000000E+04
 0.9200E+02
 0.3010E+05
Y-92      0.1000E+01
none      0.0000E+00
none      0.0000E+00
Nuclide 012:
Y-90
  9
 0.2304000000E+06
 0.9000E+02
 0.2040E+04
none      0.0000E+00
none      0.0000E+00
none      0.0000E+00
Nuclide 013:
Y-91
  9
 0.5055264000E+07
 0.9100E+02
 0.2730E+05
none      0.0000E+00
none      0.0000E+00
none      0.0000E+00
Nuclide 014:
Y-92
  9
 0.1274400000E+05
 0.9200E+02
 0.2900E+05
none      0.0000E+00
none      0.0000E+00
none      0.0000E+00
Nuclide 015:
Y-93
  9
 0.3636000000E+05
 0.9300E+02
 0.3560E+05
```

```
Zr-93     0.1000E+01
none      0.0000E+00
none      0.0000E+00
Nuclide 016:
Zr-95
  9
 0.5527872000E+07
 0.9500E+02
 0.4270E+05
Nb-95m    0.7000E-02
Nb-95     0.9900E+00
none      0.0000E+00
Nuclide 017:
Zr-97
  9
 0.6084000000E+05
 0.9700E+02
 0.4330E+05
Nb-97m    0.9500E+00
Nb-97     0.5300E-01
none      0.0000E+00
Nuclide 018:
Nb-95
  9
 0.3036960000E+07
 0.9500E+02
 0.4270E+05
none      0.0000E+00
none      0.0000E+00
none      0.0000E+00
Nuclide 019:
Mo-99
  7
 0.2376000000E+06
 0.9900E+02
 0.4900E+05
Tc-99m    0.8800E+00
Tc-99     0.1200E+00
none      0.0000E+00
Nuclide 020:
Tc-99m
  7
 0.2167200000E+05
 0.9900E+02
 0.4340E+05
Tc-99     0.1000E+01
none      0.0000E+00
none      0.0000E+00
Nuclide 021:
Ru-103
  7
 0.3393792000E+07
 0.1030E+03
 0.4700E+05
Rh-103m   0.1000E+01
none      0.0000E+00
none      0.0000E+00
Nuclide 022:
Ru-105
  7
 0.1598400000E+05
 0.1050E+03
 0.3460E+05
Rh-105    0.1000E+01
none      0.0000E+00
none      0.0000E+00
Nuclide 023:
Ru-106
  7
 0.3181248000E+08
```

```
 0.1060E+03
 0.2040E+05
Rh-106    0.1000E+01
none      0.0000E+00
none      0.0000E+00
Nuclide 024:
Rh-105
  7
 0.1272960000E+06
 0.1050E+03
 0.3270E+05
none      0.0000E+00
none      0.0000E+00
none      0.0000E+00
Nuclide 025:
Sb-127
  4
 0.3326400000E+06
 0.1270E+03
 0.3310E+04
Te-127m   0.1800E+00
Te-127    0.8200E+00
none      0.0000E+00
Nuclide 026:
Sb-129
  4
 0.1555200000E+05
 0.1290E+03
 0.9480E+04
Te-129m   0.2200E+00
Te-129    0.7700E+00
none      0.0000E+00
Nuclide 027:
Te-127
  4
 0.3366000000E+05
 0.1270E+03
 0.3310E+04
none      0.0000E+00
none      0.0000E+00
none      0.0000E+00
Nuclide 028:
Te-127m
  4
 0.9417600000E+07
 0.1270E+03
 0.4660E+03
Te-127    0.9800E+00
none      0.0000E+00
none      0.0000E+00
Nuclide 029:
Te-129
  4
 0.4176000000E+04
 0.1290E+03
 0.8900E+04
I-129     0.1000E+01
none      0.0000E+00
none      0.0000E+00
Nuclide 030:
Te-129m
  4
 0.2903040000E+07
 0.1290E+03
 0.1390E+04
Te-129    0.6500E+00
I-129     0.3500E+00
none      0.0000E+00
Nuclide 031:
Te-131m
```

```
   4
 0.1080000000E+06
 0.1310E+03
 0.4200E+04
Te-131    0.2200E+00
I-131     0.7800E+00
none      0.0000E+00
Nuclide 032:
Te-132
   4
 0.2815200000E+06
 0.1320E+03
 0.3990E+05
I-132     0.1000E+01
none      0.0000E+00
none      0.0000E+00
Nuclide 033:
I-131
   2
 0.6946560000E+06
 0.1310E+03
 0.2790E+05
Xe-131m   0.1100E-01
none      0.0000E+00
none      0.0000E+00
Nuclide 034:
I-132
   2
 0.8280000000E+04
 0.1320E+03
 0.3940E+05
none      0.0000E+00
none      0.0000E+00
none      0.0000E+00
Nuclide 035:
I-133
   2
 0.7488000000E+05
 0.1330E+03
 0.5440E+05
Xe-133m   0.2900E-01
Xe-133    0.9700E+00
none      0.0000E+00
Nuclide 036:
I-134
   2
 0.3156000000E+04
 0.1340E+03
 0.6030E+05
none      0.0000E+00
none      0.0000E+00
none      0.0000E+00
Nuclide 037:
I-135
   2
 0.2379600000E+05
 0.1350E+03
 0.5030E+05
Xe-135m   0.1500E+00
Xe-135    0.8500E+00
none      0.0000E+00
Nuclide 038:
Xe-133
   1
 0.4531680000E+06
 0.1330E+03
 0.5430E+05
none      0.0000E+00
none      0.0000E+00
none      0.0000E+00
```

```
Nuclide 039:
Xe-135
  1
 0.3272400000E+05
 0.1350E+03
 0.1310E+05
Cs-135    0.1000E+01
none      0.0000E+00
none      0.0000E+00
Nuclide 040:
Cs-134
  3
 0.6507177120E+08
 0.1340E+03
 0.6270E+04
none      0.0000E+00
none      0.0000E+00
none      0.0000E+00
Nuclide 041:
Cs-136
  3

 0.1131840000E+07
 0.1360E+03
 0.1390E+04
none      0.0000E+00
none      0.0000E+00
none      0.0000E+00
Nuclide 042:
Cs-137
  3
 0.9467280000E+09
 0.1370E+03
 0.5050E+04
Ba-137m   0.9500E+00
none      0.0000E+00
none      0.0000E+00
Nuclide 043:
Ba-139
  6
 0.4962000000E+04
 0.1390E+03
 0.4720E+05
none      0.0000E+00
none      0.0000E+00
none      0.0000E+00
Nuclide 044:
Ba-140
  6
 0.1100736000E+07
 0.1400E+03
 0.4580E+05
La-140    0.1000E+01
none      0.0000E+00
none      0.0000E+00
Nuclide 045:
La-140
  9
 0.1449792000E+06
 0.1400E+03
 0.4710E+05
none      0.0000E+00
none      0.0000E+00
none      0.0000E+00
Nuclide 046:
La-141
  9
 0.1414800000E+05
 0.1410E+03
```

```
 0.4360E+05

Ce-141    0.1000E+01
none      0.0000E+00
none      0.0000E+00
Nuclide 047:
La-142
  9
 0.5550000000E+04
 0.1420E+03
 0.4170E+05
none      0.0000E+00
none      0.0000E+00
none      0.0000E+00
Nuclide 048:
Ce-141
  8
 0.2808086400E+07
 0.1410E+03
 0.4430E+05
none      0.0000E+00
none      0.0000E+00
none      0.0000E+00
Nuclide 049:
Ce-143
  8
 0.1188000000E+06
 0.1430E+03
 0.4010E+05
Pr-143    0.1000E+01
none      0.0000E+00
none      0.0000E+00
Nuclide 050:
Ce-144
  8
 0.2456352000E+08
 0.1440E+03
 0.3250E+05
Pr-144m   0.1800E-01
Pr-144    0.9800E+00
none      0.0000E+00
Nuclide 051:
Pr-143
  9
 0.1171584000E+07
 0.1430E+03
 0.3780E+05
none      0.0000E+00
none      0.0000E+00
none      0.0000E+00
Nuclide 052:
Nd-147
  9
 0.9486720000E+06
 0.1470E+03
 0.1710E+05
Pm-147    0.1000E+01
none      0.0000E+00
none      0.0000E+00
Nuclide 053:
Np-239
  8
 0.2034720000E+06
 0.2390E+03
 0.7010E+06
Pu-239    0.1000E+01
none      0.0000E+00
none      0.0000E+00
Nuclide 054:
Pu-238
```

```
    8
   0.2768863824E+10
   0.2380E+03
   0.9560E+02
  U-234     0.1000E+01
  none      0.0000E+00
  none      0.0000E+00
  Nuclide 055:
  Pu-239
    8
   0.7594336440E+12
   0.2390E+03
   0.1890E+02
  U-235     0.1000E+01
  none      0.0000E+00
  none      0.0000E+00
  Nuclide 056:
  Pu-240
    8
   0.2062920312E+12
   0.2400E+03
   0.3110E+02
  U-236     0.1000E+01
  none      0.0000E+00
  none      0.0000E+00
  Nuclide 057:
  Pu-241
    8

   0.4544294400E+09
   0.2410E+03
   0.8850E+04
  U-237     0.2400E-04
  Am-241    0.1000E+01
  none      0.0000E+00
  Nuclide 058:
  Am-241
    9
   0.1363919472E+11
   0.2410E+03
   0.7670E+01
  Np-237    0.1000E+01
  none      0.0000E+00
  none      0.0000E+00
  Nuclide 059:
  Cm-242
    9
   0.1406592000E+08
   0.2420E+03
   0.1740E+04
  Pu-238    0.1000E+01
  none      0.0000E+00
  none      0.0000E+00
  Nuclide 060:
  Cm-244
    9
   0.5715081360E+09
   0.2440E+03
   0.1410E+03
  Pu-240    0.1000E+01
  none      0.0000E+00
  none      0.0000E+00
  End of Nuclear Inventory File

COLUMBIAesf.NIF

Nuclide Inventory Name:
 Normalized Columbia 3556 MWth BWR Core Inventory
 Power Level:
  0.1000E+01
```

```
Nuclides:
 60
Nuclide 001:
Co-58
  7
 0.6117120000E+07
 0.5800E+02
 0.0000E+00
none      0.0000E+00
none      0.0000E+00
none      0.0000E+00
Nuclide 002:
Co-60
  7
 0.1663401096E+09
 0.6000E+02
 0.0000E+00
none      0.0000E+00
none      0.0000E+00
none      0.0000E+00
Nuclide 003:
Kr-85
  1
 0.3382974720E+09
 0.8500E+02
 0.0000E+00
none      0.0000E+00
none      0.0000E+00
none      0.0000E+00
Nuclide 004:
Kr-85m
  1
 0.1612800000E+05
 0.8500E+02
 0.0000E+00
Kr-85     0.2100E+00
none      0.0000E+00
none      0.0000E+00
Nuclide 005:
Kr-87
  1
 0.4578000000E+04
 0.8700E+02
 0.0000E+00
Rb-87     0.1000E+01
none      0.0000E+00
none      0.0000E+00
Nuclide 006:
Kr-88
  1
 0.1022400000E+05
 0.8800E+02
 0.0000E+00
Rb-88     0.1000E+01
none      0.0000E+00
none      0.0000E+00
Nuclide 007:
Rb-86
  3
 0.1612224000E+07
 0.8600E+02
 0.0000E+00
none      0.0000E+00
none      0.0000E+00
none      0.0000E+00
Nuclide 008:
Sr-89
  5
 0.4363200000E+07
 0.8900E+02
```

```
 0.0000E+00
none      0.0000E+00
none      0.0000E+00
none      0.0000E+00
Nuclide 009:
Sr-90
  5
 0.9189573120E+09
 0.9000E+02
 0.0000E+00
Y-90      0.1000E+01
none      0.0000E+00
none      0.0000E+00
Nuclide 010:
Sr-91
  5
 0.3420000000E+05
 0.9100E+02
 0.0000E+00
Y-91m     0.5800E+00
Y-91      0.4200E+00
none      0.0000E+00
Nuclide 011:
Sr-92
  5
 0.9756000000E+04
 0.9200E+02
 0.0000E+00
Y-92      0.1000E+01
none      0.0000E+00
none      0.0000E+00
Nuclide 012:
Y-90
  9
 0.2304000000E+06
 0.9000E+02
 0.0000E+00
none      0.0000E+00
none      0.0000E+00
none      0.0000E+00
Nuclide 013:
Y-91
  9
 0.5055264000E+07
 0.9100E+02
 0.0000E+00
none      0.0000E+00
none      0.0000E+00
none      0.0000E+00
Nuclide 014:
Y-92
  9
 0.1274400000E+05
 0.9200E+02
 0.0000E+00
none      0.0000E+00
none      0.0000E+00
none      0.0000E+00
Nuclide 015:
Y-93
  9
 0.3636000000E+05
 0.9300E+02
 0.0000E+00
Zr-93     0.1000E+01
none      0.0000E+00
none      0.0000E+00
Nuclide 016:
Zr-95
  9
```

```
 0.5527872000E+07
 0.9500E+02
 0.0000E+00
Nb-95m   0.7000E-02
Nb-95    0.9900E+00
none     0.0000E+00
Nuclide 017:
Zr-97
  9
 0.6084000000E+05
 0.9700E+02
 0.0000E+00
Nb-97m   0.9500E+00
Nb-97    0.5300E-01
none     0.0000E+00
Nuclide 018:
Nb-95
  9
 0.3036960000E+07
 0.9500E+02
 0.0000E+00
none     0.0000E+00
none     0.0000E+00
none     0.0000E+00
Nuclide 019:
Mo-99
  7
 0.2376000000E+06
 0.9900E+02
 0.0000E+00
Tc-99m   0.8800E+00
Tc-99    0.1200E+00
none     0.0000E+00
Nuclide 020:
Tc-99m
  7
 0.2167200000E+05
 0.9900E+02
 0.0000E+00
Tc-99    0.1000E+01
none     0.0000E+00
none     0.0000E+00
Nuclide 021:
Ru-103
  7
 0.3393792000E+07
 0.1030E+03
 0.0000E+00
Rh-103m  0.1000E+01
none     0.0000E+00
none     0.0000E+00
Nuclide 022:
Ru-105
  7
 0.1598400000E+05
 0.1050E+03
 0.0000E+00
Rh-105   0.1000E+01
none     0.0000E+00
none     0.0000E+00
Nuclide 023:
Ru-106
  7
 0.3181248000E+08
 0.1060E+03
 0.0000E+00
Rh-106   0.1000E+01
none     0.0000E+00
none     0.0000E+00
Nuclide 024:
```

```
Rh-105
  7
 0.1272960000E+06
 0.1050E+03
 0.0000E+00
none      0.0000E+00
none      0.0000E+00
none      0.0000E+00
Nuclide 025:
Sb-127
  4
 0.3326400000E+06
 0.1270E+03
 0.0000E+00
Te-127m   0.1800E+00
Te-127    0.8200E+00
none      0.0000E+00
Nuclide 026:
Sb-129
  4
 0.1555200000E+05
 0.1290E+03
 0.0000E+00
Te-129m   0.2200E+00
Te-129    0.7700E+00
none      0.0000E+00
Nuclide 027:
Te-127
  4
 0.3366000000E+05
 0.1270E+03
 0.0000E+00
none      0.0000E+00
none      0.0000E+00
none      0.0000E+00
Nuclide 028:
Te-127m
  4
 0.9417600000E+07
 0.1270E+03
 0.0000E+00
Te-127    0.9800E+00
none      0.0000E+00
none      0.0000E+00
Nuclide 029:
Te-129
  4
 0.4176000000E+04
 0.1290E+03
 0.0000E+00
I-129     0.1000E+01
none      0.0000E+00
none      0.0000E+00
Nuclide 030:
Te-129m
  4
 0.2903040000E+07
 0.1290E+03
 0.0000E+00
Te-129    0.6500E+00
I-129     0.3500E+00
none      0.0000E+00
Nuclide 031:
Te-131m
  4
 0.1080000000E+06
 0.1310E+03
 0.0000E+00
Te-131    0.2200E+00
I-131     0.7800E+00
```

```
none      0.0000E+00
Nuclide 032:
Te-132
  4
 0.2815200000E+06
 0.1320E+03
 0.0000E+00
I-132     0.1000E+01
none      0.0000E+00
none      0.0000E+00
Nuclide 033:
I-131
  2
 0.6946560000E+06
 0.1310E+03
 0.5580E+05
Xe-131m   0.1100E-01
none      0.0000E+00
none      0.0000E+00
Nuclide 034:
I-132
  2
 0.8280000000E+04
 0.1320E+03
 0.7880E+05
none      0.0000E+00
none      0.0000E+00
none      0.0000E+00
Nuclide 035:
I-133
  2
 0.7488000000E+05
 0.1330E+03
 0.1088E+06
Xe-133m   0.2900E-01
Xe-133    0.9700E+00
none      0.0000E+00
Nuclide 036:
I-134
  2
 0.3156000000E+04
 0.1340E+03
 0.1206E+06
none      0.0000E+00
none      0.0000E+00
none      0.0000E+00
Nuclide 037:
I-135
  2
 0.2379600000E+05
 0.1350E+03
 0.1006E+06
Xe-135m   0.1500E+00
Xe-135    0.8500E+00
none      0.0000E+00
Nuclide 038:
Xe-133
  1
 0.4531680000E+06
 0.1330E+03
 0.0000E+00
none      0.0000E+00
none      0.0000E+00
none      0.0000E+00
Nuclide 039:
Xe-135
  1
 0.3272400000E+05
 0.1350E+03
 0.0000E+00
```

```
Cs-135    0.1000E+01
none      0.0000E+00
none      0.0000E+00
Nuclide 040:
Cs-134
  3
 0.6507177120E+08
 0.1340E+03
 0.0000E+00
none      0.0000E+00
none      0.0000E+00
none      0.0000E+00
Nuclide 041:
Cs-136
  3

 0.1131840000E+07
 0.1360E+03
 0.0000E+00
none      0.0000E+00
none      0.0000E+00
none      0.0000E+00
Nuclide 042:
Cs-137
  3
 0.9467280000E+09
 0.1370E+03
 0.0000E+00
Ba-137m   0.9500E+00
none      0.0000E+00
none      0.0000E+00
Nuclide 043:
Ba-139
  6
 0.4962000000E+04
 0.1390E+03
 0.0000E+00
none      0.0000E+00
none      0.0000E+00
none      0.0000E+00
Nuclide 044:
Ba-140
  6
 0.1100736000E+07
 0.1400E+03
 0.0000E+00
La-140    0.1000E+01
none      0.0000E+00
none      0.0000E+00
Nuclide 045:
La-140
  9
 0.1449792000E+06
 0.1400E+03
 0.0000E+00
none      0.0000E+00
none      0.0000E+00
none      0.0000E+00
Nuclide 046:
La-141
  9
 0.1414800000E+05
 0.1410E+03
 0.0000E+00

Ce-141    0.1000E+01
none      0.0000E+00
none      0.0000E+00
Nuclide 047:
La-142
```

```
  9
 0.5550000000E+04
 0.1420E+03
 0.0000E+00
none      0.0000E+00
none      0.0000E+00
none      0.0000E+00
Nuclide 048:
Ce-141
  8
 0.2808086400E+07
 0.1410E+03
 0.0000E+00
none      0.0000E+00
none      0.0000E+00
none      0.0000E+00
Nuclide 049:
Ce-143
  8
 0.1188000000E+06
 0.1430E+03
 0.0000E+00
Pr-143    0.1000E+01
none      0.0000E+00
none      0.0000E+00
Nuclide 050:
Ce-144
  8
 0.2456352000E+08
 0.1440E+03
 0.0000E+00
Pr-144m   0.1800E-01
Pr-144    0.9800E+00
none      0.0000E+00
Nuclide 051:
Pr-143
  9
 0.1171584000E+07
 0.1430E+03
 0.0000E+00
none      0.0000E+00
none      0.0000E+00
none      0.0000E+00
Nuclide 052:
Nd-147
  9
 0.9486720000E+06
 0.1470E+03
 0.0000E+00
Pm-147    0.1000E+01
none      0.0000E+00
none      0.0000E+00
Nuclide 053:
Np-239
  8
 0.2034720000E+06
 0.2390E+03
 0.0000E+00
Pu-239    0.1000E+01
none      0.0000E+00
none      0.0000E+00
Nuclide 054:
Pu-238
  8
 0.2768863824E+10
 0.2380E+03
 0.0000E+00
U-234     0.1000E+01
none      0.0000E+00
none      0.0000E+00
```

```
Nuclide 055:
Pu-239
  8
 0.7594336440E+12
 0.2390E+03
 0.0000E+00
U-235     0.1000E+01
none      0.0000E+00
none      0.0000E+00
Nuclide 056:
Pu-240
  8
 0.2062920312E+12
 0.2400E+03
 0.0000E+00
U-236     0.1000E+01
none      0.0000E+00
none      0.0000E+00
Nuclide 057:
Pu-241
  8

 0.4544294400E+09
 0.2410E+03
 0.0000E+00
U-237     0.2400E-04
Am-241    0.1000E+01
none      0.0000E+00
Nuclide 058:
Am-241
  9
 0.1363919472E+11
 0.2410E+03
 0.0000E+00
Np-237    0.1000E+01
none      0.0000E+00
none      0.0000E+00
Nuclide 059:
Cm-242
  9
 0.1406592000E+08
 0.2420E+03
 0.0000E+00
Pu-238    0.1000E+01
none      0.0000E+00
none      0.0000E+00
Nuclide 060:
Cm-244
  9
 0.5715081360E+09
 0.2440E+03
 0.0000E+00
Pu-240    0.1000E+01
none      0.0000E+00
none      0.0000E+00
End of Nuclear Inventory File
```

COLUMBIA.RFT

```
Release Fraction and Timing Name:
 Columbia, NUREG-1465
 Duration (h): Design Basis Accident
  0.3333E-01  0.5000E+00  0.1500E+01  0.0000E+00
 Noble Gases:
  0.0000E+00  0.5000E-01  0.9500E+00  0.0000E+00
 Iodine:
  0.0000E+00  0.5000E-01  0.2500E+00  0.0000E+00
 Cesium:
  0.0000E+00  0.5000E-01  0.2000E+00  0.0000E+00
 Tellurium:
  0.0000E+00  0.0000E+00  0.5000E-01  0.0000E+00
 Strontium:
  0.0000E+00  0.0000E+00  0.2000E-01  0.0000E+00
 Barium:
  0.0000E+00  0.0000E+00  0.2000E-01  0.0000E+00
 Ruthenium:
  0.0000E+00  0.0000E+00  0.2500E-02  0.0000E+00
 Cerium:
  0.0000E+00  0.0000E+00  0.5000E-03  0.0000E+00
 Lanthanum:
  0.0000E+00  0.0000E+00  0.2000E-03  0.0000E+00
 Non-Radioactive Aerosols (kg):
  0.0000E+00  0.0000E+00  0.0000E+00  0.0000E+00
 End of Release File
```

Fgr11&12.inp

```
FGRDCF 10/24/95   03:24:50   beta-test version 1.10, minor FORTRAN fixes 5/4/95
Implicit daughter halflives (m) less than  90 and less than 0.100 of parent
        9 ORGANS DEFINED IN THIS FILE:
GONADS
BREAST
LUNGS
RED MARR
BONE SUR
THYROID
REMAINDER
EFFECTIVE
SKIN(FGR)
       60 NUCLIDES DEFINED IN THIS FILE:
Co-58     Y
Co-60     Y
Kr-85
Kr-85m
Kr-87
Kr-88
Rb-86     D
Sr-89     Y
Sr-90     Y
Sr-91     Y     Including:Y-91m
Sr-92     Y
Y-90      Y
Y-91      Y
Y-92      Y
Y-93      Y
Zr-95     D
Zr-97     Y     Including:Nb-97m , Including:Nb-97
Nb-95     Y
Mo-99     Y
Tc-99m    D
Ru-103    Y     Including:Rh-103m
Ru-105    Y
Ru-106    Y     Including:Rh-106
Rh-105    Y
Sb-127    W
Sb-129    W
Te-127    W
Te-127m   W
Te-129    W
Te-129m   W     Including:Te-129
Te-131m   W     Including:Te-131
Te-132    W
I-131     D
I-132     D
I-133     D
I-134     D
I-135     D     Including:Xe-135m
Xe-133
Xe-135
Cs-134    D
Cs-136    D
Cs-137    D     Including:Ba-137m
Ba-139    D
Ba-140    D
La-140    W
La-141    D
La-142    D
Ce-141    Y
Ce-143    Y
Ce-144    Y     Including:Pr-144m, Including:Pr-144
Pr-143    Y
Nd-147    Y
Np-239    W
Pu-238    Y
Pu-239    Y
```

Pu-240	Y
Pu-241	Y
Am-241	W
Cm-242	W
Cm-244	W

	CLOUDSHINE	GROUND SHINE 8HR	GROUND SHINE 7DAY	GROUND SHINE RATE	INHALED ACUTE	INHALED CHRONIC	INGESTION
Co-58							
GONADS	4.660E-14	2.867E-11	5.828E-10	9.970E-16-1.000E+00		6.170E-10	1.040E-09
BREAST	5.300E-14	2.737E-11	5.565E-10	9.520E-16-1.000E+00		9.370E-10	1.790E-10
LUNGS	4.640E-14	2.617E-11	5.319E-10	9.100E-16-1.000E+00		1.600E-08	8.530E-11
RED MARR	4.530E-14	2.671E-11	5.430E-10	9.290E-16-1.000E+00		9.230E-10	2.600E-10
BONE SUR	7.410E-14	3.795E-11	7.716E-10	1.320E-15-1.000E+00		6.930E-10	1.250E-10
THYROID	4.770E-14	2.720E-11	5.530E-10	9.460E-16-1.000E+00		8.720E-10	6.310E-11
REMAINDER	4.440E-14	2.585E-11	5.255E-10	8.990E-16-1.000E+00		1.890E-09	1.580E-09
EFFECTIVE	4.760E-14	2.732E-11	5.553E-10	9.500E-16-1.000E+00		2.940E-09	8.090E-10
SKIN(FGR)	5.580E-14	3.278E-11	6.664E-10	1.140E-15-1.000E+00		0.000E+00	0.000E+00
Co-60							
GONADS	1.230E-13	7.056E-11	1.480E-09	2.450E-15-1.000E+00		4.760E-09	3.190E-09
BREAST	1.390E-13	6.739E-11	1.413E-09	2.340E-15-1.000E+00		1.840E-08	1.100E-09
LUNGS	1.240E-13	6.537E-11	1.371E-09	2.270E-15-1.000E+00		3.450E-07	8.770E-10
RED MARR	1.230E-13	6.710E-11	1.407E-09	2.330E-15-1.000E+00		1.720E-08	1.320E-09
BONE SUR	1.780E-13	8.956E-11	1.879E-09	3.110E-15-1.000E+00		1.350E-08	9.390E-10
THYROID	1.270E-13	6.480E-11	1.359E-09	2.250E-15-1.000E+00		1.620E-08	7.880E-10
REMAINDER	1.200E-13	6.508E-11	1.365E-09	2.260E-15-1.000E+00		3.600E-08	4.970E-09
EFFECTIVE	1.260E-13	6.768E-11	1.419E-09	2.350E-15-1.000E+00		5.910E-08	2.770E-09
SKIN(FGR)	1.450E-13	7.948E-11	1.667E-09	2.760E-15-1.000E+00		0.000E+00	0.000E+00
Kr-85							
GONADS	1.170E-16	8.121E-14	1.704E-12	2.820E-18-1.000E+00		0.000E+00	0.000E+00
BREAST	1.340E-16	7.891E-14	1.656E-12	2.740E-18-1.000E+00		0.000E+00	0.000E+00
LUNGS	1.140E-16	7.056E-14	1.481E-12	2.450E-18-1.000E+00		0.000E+00	0.000E+00
RED MARR	1.090E-16	6.998E-14	1.469E-12	2.430E-18-1.000E+00		0.000E+00	0.000E+00
BONE SUR	2.200E-16	1.287E-13	2.702E-12	4.470E-18-1.000E+00		0.000E+00	0.000E+00
THYROID	1.180E-16	7.459E-14	1.565E-12	2.590E-18-1.000E+00		0.000E+00	0.000E+00
REMAINDER	1.090E-16	6.941E-14	1.457E-12	2.410E-18-1.000E+00		0.000E+00	0.000E+00
EFFECTIVE	1.190E-16	7.603E-14	1.596E-12	2.640E-18-1.000E+00		0.000E+00	0.000E+00
SKIN(FGR)	1.320E-14	2.304E-11	4.835E-10	8.000E-16-1.000E+00		0.000E+00	0.000E+00
Kr-85m							
GONADS	7.310E-15	2.594E-12	3.653E-12	1.570E-16-1.000E+00		0.000E+00	0.000E+00
BREAST	8.410E-15	2.527E-12	3.560E-12	1.530E-16-1.000E+00		0.000E+00	0.000E+00
LUNGS	7.040E-15	2.379E-12	3.351E-12	1.440E-16-1.000E+00		0.000E+00	0.000E+00
RED MARR	6.430E-15	2.346E-12	3.304E-12	1.420E-16-1.000E+00		0.000E+00	0.000E+00
BONE SUR	1.880E-14	5.286E-12	7.446E-12	3.200E-16-1.000E+00		0.000E+00	0.000E+00
THYROID	7.330E-15	2.395E-12	3.374E-12	1.450E-16-1.000E+00		0.000E+00	0.000E+00
REMAINDER	6.640E-15	2.313E-12	3.257E-12	1.400E-16-1.000E+00		0.000E+00	0.000E+00
EFFECTIVE	7.480E-15	2.511E-12	3.537E-12	1.520E-16-1.000E+00		0.000E+00	0.000E+00
SKIN(FGR)	2.240E-14	2.247E-11	3.164E-11	1.360E-15-1.000E+00		0.000E+00	0.000E+00
Kr-87							
GONADS	4.000E-14	4.962E-12	5.026E-12	7.610E-16-1.000E+00		0.000E+00	0.000E+00
BREAST	4.500E-14	4.740E-12	4.802E-12	7.270E-16-1.000E+00		0.000E+00	0.000E+00
LUNGS	4.040E-14	4.603E-12	4.663E-12	7.060E-16-1.000E+00		0.000E+00	0.000E+00
RED MARR	4.000E-14	4.708E-12	4.769E-12	7.220E-16-1.000E+00		0.000E+00	0.000E+00
BONE SUR	6.020E-14	6.514E-12	6.598E-12	9.990E-16-1.000E+00		0.000E+00	0.000E+00
THYROID	4.130E-14	4.473E-12	4.531E-12	6.860E-16-1.000E+00		0.000E+00	0.000E+00
REMAINDER	3.910E-14	4.590E-12	4.650E-12	7.040E-16-1.000E+00		0.000E+00	0.000E+00
EFFECTIVE	4.120E-14	4.773E-12	4.835E-12	7.320E-16-1.000E+00		0.000E+00	0.000E+00
SKIN(FGR)	1.370E-13	8.802E-11	8.916E-11	1.350E-14-1.000E+00		0.000E+00	0.000E+00
Kr-88							
GONADS	9.900E-14	2.278E-11	2.655E-11	1.800E-15-1.000E+00		0.000E+00	0.000E+00
BREAST	1.110E-13	2.177E-11	2.537E-11	1.720E-15-1.000E+00		0.000E+00	0.000E+00
LUNGS	1.010E-13	2.139E-11	2.493E-11	1.690E-15-1.000E+00		0.000E+00	0.000E+00
RED MARR	1.000E-13	2.190E-11	2.552E-11	1.730E-15-1.000E+00		0.000E+00	0.000E+00
BONE SUR	1.390E-13	2.886E-11	3.363E-11	2.280E-15-1.000E+00		0.000E+00	0.000E+00
THYROID	1.030E-13	2.012E-11	2.345E-11	1.590E-15-1.000E+00		0.000E+00	0.000E+00
REMAINDER	9.790E-14	2.139E-11	2.493E-11	1.690E-15-1.000E+00		0.000E+00	0.000E+00
EFFECTIVE	1.020E-13	2.202E-11	2.567E-11	1.740E-15-1.000E+00		0.000E+00	0.000E+00
SKIN(FGR)	1.350E-13	5.607E-11	6.534E-11	4.430E-15-1.000E+00		0.000E+00	0.000E+00
Rb-86							
GONADS	4.710E-15	2.788E-12	5.187E-11	9.740E-17-1.000E+00		1.340E-09	2.150E-09
BREAST	5.340E-15	2.662E-12	4.953E-11	9.300E-17-1.000E+00		1.330E-09	2.140E-09

LUNGS	4.710E-15	2.553E-12	4.750E-11	8.920E-17-1.000E+00	3.300E-09	2.140E-09
RED MARR	4.640E-15	2.619E-12	4.873E-11	9.150E-17-1.000E+00	2.320E-09	3.720E-09
BONE SUR	7.050E-15	3.635E-12	6.764E-11	1.270E-16-1.000E+00	4.270E-09	6.860E-09
THYROID	4.840E-15	2.599E-12	4.836E-11	9.080E-17-1.000E+00	1.330E-09	2.140E-09
REMAINDER	4.520E-15	2.542E-12	4.729E-11	8.880E-17-1.000E+00	1.380E-09	2.330E-09
EFFECTIVE	4.810E-15	2.665E-12	4.958E-11	9.310E-17-1.000E+00	1.790E-09	2.530E-09
SKIN(FGR)	4.850E-14	2.210E-10	4.111E-09	7.720E-15-1.000E+00	0.000E+00	0.000E+00
Sr-89						
GONADS	7.730E-17	7.155E-14	1.436E-12	2.490E-18-1.000E+00	7.950E-12	8.050E-12
BREAST	9.080E-17	7.212E-14	1.447E-12	2.510E-18-1.000E+00	7.960E-12	7.980E-12
LUNGS	7.080E-17	5.689E-14	1.142E-12	1.980E-18-1.000E+00	8.350E-08	7.970E-12
RED MARR	6.390E-17	5.345E-14	1.073E-12	1.860E-18-1.000E+00	1.070E-10	1.080E-10
BONE SUR	1.940E-16	1.560E-13	3.131E-12	5.430E-18-1.000E+00	1.590E-10	1.610E-10
THYROID	7.600E-17	6.063E-14	1.217E-12	2.110E-18-1.000E+00	7.960E-12	7.970E-12
REMAINDER	6.710E-17	5.603E-14	1.124E-12	1.950E-18-1.000E+00	3.970E-09	8.250E-09
EFFECTIVE	7.730E-17	6.523E-14	1.309E-12	2.270E-18-1.000E+00	1.120E-08	2.500E-09
SKIN(FGR)	3.690E-14	1.914E-10	3.841E-09	6.660E-15-1.000E+00	0.000E+00	0.000E+00
Sr-90						
GONADS	7.780E-18	9.590E-15	2.014E-13	3.330E-19-1.000E+00	2.690E-10	5.040E-11
BREAST	9.490E-18	1.008E-14	2.116E-13	3.500E-19-1.000E+00	2.690E-10	5.040E-11
LUNGS	6.440E-18	6.307E-15	1.324E-13	2.190E-19-1.000E+00	2.860E-06	5.040E-11
RED MARR	5.440E-18	5.558E-15	1.167E-13	1.930E-19-1.000E+00	3.280E-08	6.450E-09
BONE SUR	2.280E-17	2.393E-14	5.025E-13	8.310E-19-1.000E+00	7.090E-08	1.390E-08
THYROID	7.330E-18	7.171E-15	1.506E-13	2.490E-19-1.000E+00	2.690E-10	5.040E-11
REMAINDER	6.110E-18	6.422E-15	1.348E-13	2.230E-19-1.000E+00	5.730E-09	6.700E-09
EFFECTIVE	7.530E-18	8.179E-15	1.717E-13	2.840E-19-1.000E+00	3.510E-07	3.230E-09
SKIN(FGR)	9.200E-15	4.032E-12	8.465E-11	1.400E-16-1.000E+00	0.000E+00	0.000E+00
Sr-91						
GONADS	4.819E-14	2.155E-11	5.062E-11	1.026E-15-1.000E+00	5.669E-11	2.520E-10
BREAST	5.477E-14	2.059E-11	4.838E-11	9.806E-16-1.000E+00	1.775E-11	3.676E-11
LUNGS	4.803E-14	1.970E-11	4.626E-11	9.376E-16-1.000E+00	2.170E-09	1.055E-11
RED MARR	4.691E-14	2.011E-11	4.722E-11	9.570E-16-1.000E+00	2.275E-11	5.659E-11
BONE SUR	7.674E-14	2.852E-11	6.709E-11	1.360E-15-1.000E+00	1.306E-11	2.070E-11
THYROID	4.938E-14	2.035E-11	4.782E-11	9.693E-16-1.000E+00	9.930E-12	1.968E-12
REMAINDER	4.610E-14	1.948E-11	4.573E-11	9.268E-16-1.000E+00	5.802E-10	2.557E-09
EFFECTIVE	4.924E-14	2.057E-11	4.832E-11	9.793E-16-1.000E+00	4.547E-10	8.455E-10
SKIN(FGR)	9.938E-14	1.748E-10	3.987E-10	8.080E-15-1.000E+00	0.000E+00	0.000E+00
Sr-92						
GONADS	6.610E-14	1.593E-11	1.830E-11	1.300E-15-1.000E+00	1.020E-11	8.180E-11
BREAST	7.480E-14	1.520E-11	1.745E-11	1.240E-15-1.000E+00	6.490E-12	1.700E-11
LUNGS	6.670E-14	1.483E-11	1.703E-11	1.210E-15-1.000E+00	1.050E-09	7.220E-12
RED MARR	6.620E-14	1.520E-11	1.745E-11	1.240E-15-1.000E+00	6.980E-12	2.290E-11
BONE SUR	9.490E-14	2.010E-11	2.308E-11	1.640E-15-1.000E+00	4.360E-12	8.490E-12
THYROID	6.820E-14	1.446E-11	1.661E-11	1.180E-15-1.000E+00	3.920E-12	1.300E-12
REMAINDER	6.450E-14	1.471E-11	1.689E-11	1.200E-15-1.000E+00	2.900E-10	1.720E-09
EFFECTIVE	6.790E-14	1.532E-11	1.759E-11	1.250E-15-1.000E+00	2.180E-10	5.430E-10
SKIN(FGR)	8.560E-14	2.280E-11	2.618E-11	1.860E-15-1.000E+00	0.000E+00	0.000E+00
Y-90						
GONADS	1.890E-16	1.586E-13	1.601E-12	5.750E-18-1.000E+00	5.170E-13	1.430E-14
BREAST	2.200E-16	1.578E-13	1.593E-12	5.720E-18-1.000E+00	5.170E-13	1.270E-14
LUNGS	1.770E-16	1.313E-13	1.326E-12	4.760E-18-1.000E+00	9.310E-09	1.260E-14
RED MARR	1.620E-16	1.261E-13	1.273E-12	4.570E-18-1.000E+00	1.520E-11	3.700E-13
BONE SUR	4.440E-16	3.228E-13	3.259E-12	1.170E-17-1.000E+00	1.510E-11	3.670E-13
THYROID	1.870E-16	1.385E-13	1.398E-12	5.020E-18-1.000E+00	5.170E-13	1.260E-14
REMAINDER	1.680E-16	1.291E-13	1.303E-12	4.680E-18-1.000E+00	3.870E-09	9.680E-09
EFFECTIVE	1.900E-16	1.468E-13	1.482E-12	5.320E-18-1.000E+00	2.280E-09	2.910E-09
SKIN(FGR)	6.240E-14	2.897E-10	2.924E-09	1.050E-14-1.000E+00	0.000E+00	0.000E+00
Y-91						
GONADS	2.560E-16	1.756E-13	3.546E-12	6.110E-18-1.000E+00	8.200E-12	3.540E-12
BREAST	2.930E-16	1.713E-13	3.459E-12	5.960E-18-1.000E+00	8.920E-12	5.540E-13
LUNGS	2.500E-16	1.526E-13	3.082E-12	5.310E-18-1.000E+00	9.870E-08	2.020E-13
RED MARR	2.410E-16	1.521E-13	3.070E-12	5.290E-18-1.000E+00	3.190E-10	6.590E-12
BONE SUR	4.560E-16	2.903E-13	5.862E-12	1.010E-17-1.000E+00	3.180E-10	6.130E-12
THYROID	2.600E-16	1.564E-13	3.157E-12	5.440E-18-1.000E+00	8.500E-12	1.290E-13
REMAINDER	2.390E-16	1.509E-13	3.047E-12	5.250E-18-1.000E+00	4.200E-09	8.570E-09
EFFECTIVE	2.600E-16	1.650E-13	3.332E-12	5.740E-18-1.000E+00	1.320E-08	2.570E-09
SKIN(FGR)	3.850E-14	1.989E-10	4.016E-09	6.920E-15-1.000E+00	0.000E+00	0.000E+00
Y-92						
GONADS	1.270E-14	3.855E-12	4.872E-12	2.650E-16-1.000E+00	2.610E-12	1.960E-11
BREAST	1.440E-14	3.680E-12	4.652E-12	2.530E-16-1.000E+00	1.500E-12	3.550E-12

LUNGS	1.270E-14	3.535E-12	4.468E-12	2.430E-16	-1.000E+00	1.240E-09	1.390E-12
RED MARR	1.250E-14	3.608E-12	4.560E-12	2.480E-16	-1.000E+00	2.070E-12	4.910E-12
BONE SUR	1.950E-14	5.091E-12	6.435E-12	3.500E-16	-1.000E+00	1.510E-12	1.750E-12
THYROID	1.300E-14	3.579E-12	4.523E-12	2.460E-16	-1.000E+00	1.050E-12	1.770E-13
REMAINDER	1.220E-14	3.506E-12	4.431E-12	2.410E-16	-1.000E+00	2.030E-10	1.700E-09
EFFECTIVE	1.300E-14	3.680E-12	4.652E-12	2.530E-16	-1.000E+00	2.110E-10	5.150E-10
SKIN(FGR)	1.140E-13	2.022E-10	2.556E-10	1.390E-14	-1.000E+00	0.000E+00	0.000E+00
Y-93							
GONADS	4.670E-15	2.108E-12	4.989E-12	9.510E-17	-1.000E+00	5.310E-12	2.200E-11
BREAST	5.300E-15	2.026E-12	4.794E-12	9.140E-17	-1.000E+00	1.740E-12	3.130E-12
LUNGS	4.680E-15	1.937E-12	4.585E-12	8.740E-17	-1.000E+00	2.520E-09	8.670E-13
RED MARR	4.580E-15	1.972E-12	4.669E-12	8.900E-17	-1.000E+00	4.040E-12	4.930E-12
BONE SUR	7.580E-15	2.948E-12	6.977E-12	1.330E-16	-1.000E+00	3.140E-12	1.730E-12
THYROID	4.790E-15	1.908E-12	4.516E-12	8.610E-17	-1.000E+00	9.260E-13	1.260E-13
REMAINDER	4.510E-15	1.919E-12	4.543E-12	8.660E-17	-1.000E+00	9.250E-10	4.090E-09
EFFECTIVE	4.800E-15	2.021E-12	4.784E-12	9.120E-17	-1.000E+00	5.820E-10	1.230E-09
SKIN(FGR)	8.500E-14	2.726E-10	6.452E-10	1.230E-14	-1.000E+00	0.000E+00	0.000E+00
Zr-95							
GONADS	3.530E-14	2.182E-11	4.421E-10	7.590E-16	-1.000E+00	1.880E-09	8.160E-10
BREAST	4.010E-14	2.084E-11	4.223E-10	7.250E-16	-1.000E+00	1.910E-09	1.050E-10
LUNGS	3.510E-14	1.989E-11	4.030E-10	6.920E-16	-1.000E+00	2.170E-09	2.340E-11
RED MARR	3.430E-14	2.030E-11	4.112E-10	7.060E-16	-1.000E+00	1.300E-08	2.140E-10
BONE SUR	5.620E-14	2.875E-11	5.824E-10	1.000E-15	-1.000E+00	1.030E-07	4.860E-10
THYROID	3.610E-14	2.076E-11	4.205E-10	7.220E-16	-1.000E+00	1.440E-09	8.270E-12
REMAINDER	3.360E-14	1.963E-11	3.978E-10	6.830E-16	-1.000E+00	2.280E-09	2.530E-09
EFFECTIVE	3.600E-14	2.078E-11	4.211E-10	7.230E-16	-1.000E+00	6.390E-09	1.020E-09
SKIN(FGR)	4.500E-14	2.561E-11	5.190E-10	8.910E-16	-1.000E+00	0.000E+00	0.000E+00
Zr-97							
GONADS	4.331E-14	2.179E-11	7.799E-11	9.253E-16	-1.000E+00	1.840E-10	6.228E-10
BREAST	4.928E-14	2.083E-11	7.455E-11	8.846E-16	-1.000E+00	4.706E-11	8.137E-11
LUNGS	4.322E-14	1.992E-11	7.127E-11	8.456E-16	-1.000E+00	4.108E-09	1.770E-11
RED MARR	4.224E-14	2.034E-11	7.279E-11	8.634E-16	-1.000E+00	6.376E-11	1.302E-10
BONE SUR	6.897E-14	2.881E-11	1.031E-10	1.224E-15	-1.000E+00	3.504E-11	4.558E-11
THYROID	4.443E-14	2.061E-11	7.377E-11	8.755E-16	-1.000E+00	2.315E-11	2.671E-12
REMAINDER	4.139E-14	1.966E-11	7.035E-11	8.345E-16	-1.000E+00	2.041E-09	6.990E-09
EFFECTIVE	4.432E-14	2.078E-11	7.438E-11	8.824E-16	-1.000E+00	1.171E-09	2.283E-09
SKIN(FGR)	9.835E-14	2.281E-10	8.148E-10	9.587E-15	-1.000E+00	0.000E+00	0.000E+00
Nb-95							
GONADS	3.660E-14	2.253E-11	4.435E-10	7.850E-16	-1.000E+00	4.320E-10	8.050E-10
BREAST	4.160E-14	2.150E-11	4.231E-10	7.490E-16	-1.000E+00	4.070E-10	1.070E-10
LUNGS	3.650E-14	2.055E-11	4.045E-10	7.160E-16	-1.000E+00	8.320E-09	2.740E-11
RED MARR	3.560E-14	2.101E-11	4.135E-10	7.320E-16	-1.000E+00	4.420E-10	1.990E-10
BONE SUR	5.790E-14	2.957E-11	5.819E-10	1.030E-15	-1.000E+00	5.130E-10	2.940E-10
THYROID	3.750E-14	2.144E-11	4.220E-10	7.470E-16	-1.000E+00	3.580E-10	1.180E-11
REMAINDER	3.490E-14	2.032E-11	4.000E-10	7.080E-16	-1.000E+00	1.070E-09	1.470E-09
EFFECTIVE	3.740E-14	2.147E-11	4.226E-10	7.480E-16	-1.000E+00	1.570E-09	6.950E-10
SKIN(FGR)	4.300E-14	2.598E-11	5.112E-10	9.050E-16	-1.000E+00	0.000E+00	0.000E+00
Mo-99							
GONADS	7.130E-15	4.282E-12	4.403E-11	1.550E-16	-1.000E+00	9.510E-11	2.180E-10
BREAST	8.130E-15	4.116E-12	4.233E-11	1.490E-16	-1.000E+00	2.750E-11	3.430E-11
LUNGS	7.060E-15	3.867E-12	3.977E-11	1.400E-16	-1.000E+00	4.290E-09	1.510E-11
RED MARR	6.820E-15	3.923E-12	4.034E-11	1.420E-16	-1.000E+00	5.240E-11	8.320E-11
BONE SUR	1.240E-14	6.105E-12	6.278E-11	2.210E-16	-1.000E+00	4.130E-11	6.320E-11
THYROID	7.270E-15	4.033E-12	4.147E-11	1.460E-16	-1.000E+00	1.520E-11	1.030E-11
REMAINDER	6.740E-15	3.812E-12	3.920E-11	1.380E-16	-1.000E+00	1.740E-09	4.280E-09
EFFECTIVE	7.280E-15	4.061E-12	4.176E-11	1.470E-16	-1.000E+00	1.070E-09	1.360E-09
SKIN(FGR)	3.140E-14	1.039E-10	1.068E-09	3.760E-15	-1.000E+00	0.000E+00	0.000E+00
Tc-99m							
GONADS	5.750E-15	2.334E-12	3.877E-12	1.240E-16	-1.000E+00	2.770E-12	9.750E-12
BREAST	6.650E-15	2.258E-12	3.752E-12	1.200E-16	-1.000E+00	2.150E-12	3.570E-12
LUNGS	5.490E-15	2.127E-12	3.533E-12	1.130E-16	-1.000E+00	2.280E-11	3.140E-12
RED MARR	4.910E-15	2.070E-12	3.439E-12	1.100E-16	-1.000E+00	3.360E-12	6.290E-12
BONE SUR	1.630E-14	5.383E-12	8.942E-12	2.860E-16	-1.000E+00	2.620E-12	4.060E-12
THYROID	5.750E-15	2.145E-12	3.564E-12	1.140E-16	-1.000E+00	5.010E-11	8.460E-11
REMAINDER	5.150E-15	2.070E-12	3.439E-12	1.100E-16	-1.000E+00	1.020E-11	3.340E-11
EFFECTIVE	5.890E-15	2.277E-12	3.783E-12	1.210E-16	-1.000E+00	8.800E-12	1.680E-11
SKIN(FGR)	7.140E-15	2.710E-12	4.502E-12	1.440E-16	-1.000E+00	0.000E+00	0.000E+00
Ru-103							

GONADS	2.191E-14	1.404E-11	2.783E-10	4.892E-16	1.000E+00	3.070E-10	5.720E-10
BREAST	2.512E-14	1.350E-11	2.677E-10	4.705E-16	1.000E+00	3.110E-10	1.200E-10
LUNGS	2.180E-14	1.273E-11	2.522E-10	4.432E-16	1.000E+00	1.561E-08	7.310E-11
RED MARR	2.100E-14	1.287E-11	2.551E-10	4.483E-16	1.000E+00	3.190E-10	1.660E-10
BONE SUR	3.892E-14	1.958E-11	3.882E-10	6.823E-16	1.000E+00	2.370E-10	9.631E-11
THYROID	2.241E-14	1.331E-11	2.639E-10	4.638E-16	1.000E+00	2.570E-10	6.250E-11
REMAINDER	2.080E-14	1.248E-11	2.472E-10	4.346E-16	1.000E+00	1.250E-09	2.110E-09
EFFECTIVE	2.251E-14	1.332E-11	2.641E-10	4.642E-16	1.000E+00	2.421E-09	8.271E-10
SKIN(FGR)	2.774E-14	1.785E-11	3.543E-10	6.229E-16	1.000E+00	0.000E+00	0.000E+00
Ru-105							
GONADS	3.720E-14	1.327E-11	1.861E-11	8.070E-16	1.000E+00	1.590E-11	9.670E-11
BREAST	4.240E-14	1.271E-11	1.783E-11	7.730E-16	1.000E+00	6.610E-12	1.590E-11
LUNGS	3.700E-14	1.210E-11	1.697E-11	7.360E-16	1.000E+00	5.730E-10	6.210E-12
RED MARR	3.590E-14	1.230E-11	1.725E-11	7.480E-16	1.000E+00	7.700E-12	2.350E-11
BONE SUR	6.280E-14	1.809E-11	2.537E-11	1.100E-15	1.000E+00	4.620E-12	8.890E-12
THYROID	3.800E-14	1.260E-11	1.766E-11	7.660E-16	1.000E+00	4.150E-12	1.820E-12
REMAINDER	3.540E-14	1.189E-11	1.667E-11	7.230E-16	1.000E+00	1.610E-10	8.540E-10
EFFECTIVE	3.810E-14	1.265E-11	1.773E-11	7.690E-16	1.000E+00	1.230E-10	2.870E-10
SKIN(FGR)	6.730E-14	7.368E-11	1.033E-10	4.480E-15	1.000E+00	0.000E+00	0.000E+00
Ru-106							
GONADS	1.010E-14	6.411E-12	1.340E-10	2.230E-16	1.000E+00	1.300E-09	1.640E-09
BREAST	1.160E-14	6.152E-12	1.286E-10	2.140E-16	1.000E+00	1.780E-09	1.440E-09
LUNGS	1.010E-14	5.836E-12	1.220E-10	2.030E-16	1.000E+00	1.040E-06	1.420E-09
RED MARR	9.750E-15	5.893E-12	1.232E-10	2.050E-16	1.000E+00	1.760E-09	1.460E-09
BONE SUR	1.720E-14	8.883E-12	1.856E-10	3.090E-16	1.000E+00	1.610E-09	1.430E-09
THYROID	1.030E-14	6.066E-12	1.268E-10	2.110E-16	1.000E+00	1.720E-09	1.410E-09
REMAINDER	9.630E-15	5.721E-12	1.196E-10	1.990E-16	1.000E+00	1.200E-08	2.110E-08
EFFECTIVE	1.040E-14	6.095E-12	1.274E-10	2.120E-16	1.000E+00	1.290E-07	7.400E-09
SKIN(FGR)	1.090E-13	4.082E-10	8.531E-09	1.420E-14	1.000E+00	0.000E+00	0.000E+00
Rh-105							
GONADS	3.640E-15	2.127E-12	1.411E-11	7.980E-17	1.000E+00	2.110E-11	5.800E-11
BREAST	4.160E-15	2.063E-12	1.369E-11	7.740E-17	1.000E+00	5.610E-12	8.970E-12
LUNGS	3.570E-15	1.935E-12	1.284E-11	7.260E-17	1.000E+00	9.580E-10	3.860E-12
RED MARR	3.380E-15	1.946E-12	1.291E-11	7.300E-17	1.000E+00	7.770E-12	1.470E-11
BONE SUR	7.530E-15	3.332E-12	2.210E-11	1.250E-16	1.000E+00	4.460E-12	6.750E-12
THYROID	3.680E-15	1.983E-12	1.316E-11	7.440E-17	1.000E+00	2.880E-12	2.910E-12
REMAINDER	3.390E-15	1.885E-12	1.250E-11	7.070E-17	1.000E+00	4.530E-10	1.270E-09
EFFECTIVE	3.720E-15	2.031E-12	1.347E-11	7.620E-17	1.000E+00	2.580E-10	3.990E-10
SKIN(FGR)	1.070E-14	4.691E-12	3.112E-11	1.760E-16	1.000E+00	0.000E+00	0.000E+00
Sb-127							
GONADS	3.260E-14	1.985E-11	2.441E-10	7.100E-16	1.000E+00	2.520E-10	6.140E-10
BREAST	3.720E-14	1.904E-11	2.341E-10	6.810E-16	1.000E+00	9.120E-11	7.600E-11
LUNGS	3.240E-14	1.809E-11	2.224E-10	6.470E-16	1.000E+00	6.940E-09	1.570E-11
RED MARR	3.140E-14	1.834E-11	2.255E-10	6.560E-16	1.000E+00	1.610E-10	1.330E-10
BONE SUR	5.520E-14	2.720E-11	3.345E-10	9.730E-16	1.000E+00	1.340E-10	5.240E-11
THYROID	3.330E-14	1.884E-11	2.317E-10	6.740E-16	1.000E+00	6.150E-11	4.640E-12
REMAINDER	3.090E-14	1.775E-11	2.183E-10	6.350E-16	1.000E+00	2.330E-09	5.870E-09
EFFECTIVE	3.330E-14	1.890E-11	2.324E-10	6.760E-16	1.000E+00	1.630E-09	1.950E-09
SKIN(FGR)	5.580E-14	7.967E-11	9.799E-10	2.850E-15	1.000E+00	0.000E+00	0.000E+00
Sb-129							
GONADS	6.970E-14	2.336E-11	3.231E-11	1.440E-15	1.000E+00	2.150E-11	1.510E-10
BREAST	7.910E-14	2.222E-11	3.074E-11	1.370E-15	1.000E+00	1.280E-11	2.560E-11
LUNGS	6.980E-14	2.141E-11	2.962E-11	1.320E-15	1.000E+00	8.980E-10	9.390E-12
RED MARR	6.860E-14	2.190E-11	3.029E-11	1.350E-15	1.000E+00	1.700E-11	3.670E-11
BONE SUR	1.070E-13	3.033E-11	4.196E-11	1.870E-15	1.000E+00	1.460E-11	1.340E-11
THYROID	7.160E-14	2.174E-11	3.007E-11	1.340E-15	1.000E+00	9.720E-12	1.470E-12
REMAINDER	6.710E-14	2.125E-11	2.939E-11	1.310E-15	1.000E+00	1.870E-10	1.450E-09
EFFECTIVE	7.140E-14	2.238E-11	3.096E-11	1.380E-15	1.000E+00	1.740E-10	4.840E-10
SKIN(FGR)	1.050E-13	8.273E-11	1.144E-10	5.100E-15	1.000E+00	0.000E+00	0.000E+00
Te-127							
GONADS	2.370E-16	1.191E-13	2.661E-13	5.480E-18	1.000E+00	2.020E-12	4.020E-12
BREAST	2.730E-16	1.158E-13	2.588E-13	5.330E-18	1.000E+00	1.880E-12	3.000E-12
LUNGS	2.320E-16	1.060E-13	2.370E-13	4.880E-18	1.000E+00	4.270E-10	2.890E-12
RED MARR	2.210E-16	1.058E-13	2.365E-13	4.870E-18	1.000E+00	4.090E-12	6.570E-12
BONE SUR	4.650E-16	1.862E-13	4.162E-13	8.570E-18	1.000E+00	4.090E-12	6.460E-12
THYROID	2.400E-16	1.106E-13	2.472E-13	5.090E-18	1.000E+00	1.840E-12	2.860E-12
REMAINDER	2.210E-16	1.036E-13	2.316E-13	4.770E-18	1.000E+00	1.110E-10	6.130E-10
EFFECTIVE	2.420E-16	1.125E-13	2.515E-13	5.180E-18	1.000E+00	8.600E-11	1.870E-10
SKIN(FGR)	1.140E-14	1.173E-11	2.622E-11	5.400E-16	1.000E+00	0.000E+00	0.000E+00
Te-127m							

GONADS	1.900E-16	4.689E-13	9.642E-12	1.630E-17	1.000E+00	1.100E-10	1.250E-10
BREAST	2.690E-16	5.150E-13	1.059E-11	1.790E-17	1.000E+00	1.100E-10	9.740E-11
LUNGS	7.620E-17	1.602E-13	3.295E-12	5.570E-18	1.000E+00	3.340E-08	9.620E-11
RED MARR	6.430E-17	1.249E-13	2.567E-12	4.340E-18	1.000E+00	5.360E-09	5.430E-09
BONE SUR	3.940E-16	9.005E-13	1.852E-11	3.130E-17	1.000E+00	2.040E-08	2.070E-08
THYROID	1.500E-16	2.779E-13	5.714E-12	9.660E-18	1.000E+00	9.660E-11	9.430E-11
REMAINDER	8.640E-17	1.999E-13	4.111E-12	6.950E-18	1.000E+00	1.660E-09	2.980E-09
EFFECTIVE	1.470E-16	3.251E-13	6.684E-12	1.130E-17	1.000E+00	5.810E-09	2.230E-09
SKIN(FGR)	8.490E-16	1.496E-12	3.076E-11	5.200E-17	1.000E+00	0.000E+00	0.000E+00
Te-129							
GONADS	2.710E-15	3.889E-13	3.922E-13	6.510E-17	1.000E+00	5.050E-13	1.590E-12
BREAST	3.120E-15	3.800E-13	3.832E-13	6.360E-17	1.000E+00	5.390E-13	6.050E-13
LUNGS	2.640E-15	3.298E-13	3.326E-13	5.520E-17	1.000E+00	1.530E-10	4.910E-13
RED MARR	2.540E-15	3.298E-13	3.326E-13	5.520E-17	1.000E+00	6.190E-13	7.640E-13
BONE SUR	4.880E-15	5.753E-13	5.802E-13	9.630E-17	1.000E+00	6.220E-13	5.400E-13
THYROID	2.740E-15	3.525E-13	3.555E-13	5.900E-17	1.000E+00	5.090E-13	3.360E-13
REMAINDER	2.520E-15	3.262E-13	3.289E-13	5.460E-17	1.000E+00	7.280E-12	1.790E-10
EFFECTIVE	2.750E-15	3.590E-13	3.621E-13	6.010E-17	1.000E+00	2.090E-11	5.450E-11
SKIN(FGR)	3.570E-14	3.429E-11	3.458E-11	5.740E-15	1.000E+00	0.000E+00	0.000E+00
Te-129m							
GONADS	3.321E-15	2.206E-12	4.799E-11	8.561E-17	1.000E+00	1.783E-10	2.420E-10
BREAST	3.838E-15	2.181E-12	4.739E-11	8.454E-17	1.000E+00	1.694E-10	1.664E-10
LUNGS	3.176E-15	1.741E-12	3.815E-11	6.808E-17	1.000E+00	4.040E-08	1.593E-10
RED MARR	3.071E-15	1.729E-12	3.793E-11	6.768E-17	1.000E+00	3.100E-09	3.500E-09
BONE SUR	5.772E-15	3.287E-12	7.147E-11	1.275E-16	1.000E+00	7.050E-09	7.990E-09
THYROID	3.341E-15	1.923E-12	4.201E-11	7.495E-17	1.000E+00	1.563E-10	1.572E-10
REMAINDER	3.048E-15	1.746E-12	3.822E-11	6.819E-17	1.000E+00	3.275E-09	7.196E-09
EFFECTIVE	3.337E-15	1.974E-12	4.308E-11	7.686E-17	1.000E+00	6.484E-09	2.925E-09
SKIN(FGR)	3.811E-14	1.501E-10	3.360E-09	6.001E-15	1.000E+00	0.000E+00	0.000E+00
Te-131m							
GONADS	7.292E-14	4.020E-11	2.343E-10	1.535E-15	1.000E+00	2.345E-10	7.415E-10
BREAST	8.286E-14	3.853E-11	2.246E-10	1.472E-15	1.000E+00	9.309E-11	1.361E-10
LUNGS	7.265E-14	3.657E-11	2.131E-10	1.397E-15	1.000E+00	2.296E-09	6.335E-11
RED MARR	7.097E-14	3.736E-11	2.178E-10	1.427E-15	1.000E+00	1.417E-10	2.435E-10
BONE SUR	1.174E-13	5.467E-11	3.189E-10	2.090E-15	1.000E+00	2.276E-10	3.248E-10
THYROID	7.471E-14	3.741E-11	2.181E-10	1.429E-15	1.000E+00	3.669E-08	4.383E-08
REMAINDER	6.965E-14	3.626E-11	2.113E-10	1.385E-15	1.000E+00	9.509E-10	3.153E-09
EFFECTIVE	7.463E-14	3.825E-11	2.229E-10	1.461E-15	1.000E+00	1.758E-09	2.514E-09
SKIN(FGR)	1.038E-13	1.033E-10	6.188E-10	4.056E-15	1.000E+00	0.000E+00	0.000E+00
Te-132							
GONADS	1.020E-14	6.812E-12	7.706E-11	2.450E-16	1.000E+00	4.150E-10	5.410E-10
BREAST	1.180E-14	6.756E-12	7.643E-11	2.430E-16	1.000E+00	3.630E-10	3.500E-10
LUNGS	9.650E-15	5.727E-12	6.479E-11	2.060E-16	1.000E+00	1.670E-09	3.300E-10
RED MARR	8.950E-15	5.588E-12	6.322E-11	2.010E-16	1.000E+00	4.270E-10	4.440E-10
BONE SUR	2.420E-14	1.273E-11	1.441E-10	4.580E-16	1.000E+00	7.120E-10	8.300E-10
THYROID	1.020E-14	5.978E-12	6.762E-11	2.150E-16	1.000E+00	6.280E-08	5.950E-08
REMAINDER	9.160E-15	5.644E-12	6.385E-11	2.030E-16	1.000E+00	7.890E-10	1.490E-09
EFFECTIVE	1.030E-14	6.339E-12	7.171E-11	2.280E-16	1.000E+00	2.550E-09	2.540E-09
SKIN(FGR)	1.390E-14	8.313E-12	9.405E-11	2.990E-16	1.000E+00	0.000E+00	0.000E+00
I-131							
GONADS	1.780E-14	1.119E-11	1.789E-10	3.940E-16	1.000E+00	2.530E-11	4.070E-11
BREAST	2.040E-14	1.082E-11	1.730E-10	3.810E-16	1.000E+00	7.880E-11	1.210E-10
LUNGS	1.760E-14	1.016E-11	1.626E-10	3.580E-16	1.000E+00	6.570E-10	1.020E-10
RED MARR	1.680E-14	1.022E-11	1.635E-10	3.600E-16	1.000E+00	6.260E-11	9.440E-11
BONE SUR	3.450E-14	1.675E-11	2.679E-10	5.900E-16	1.000E+00	5.730E-11	8.720E-11
THYROID	1.810E-14	1.053E-11	1.685E-10	3.710E-16	1.000E+00	2.920E-07	4.760E-07
REMAINDER	1.670E-14	9.908E-12	1.585E-10	3.490E-16	1.000E+00	8.030E-11	1.570E-10
EFFECTIVE	1.820E-14	1.067E-11	1.707E-10	3.760E-16	1.000E+00	8.890E-09	1.440E-08
SKIN(FGR)	2.980E-14	1.825E-11	2.920E-10	6.430E-16	1.000E+00	0.000E+00	0.000E+00
I-132							
GONADS	1.090E-13	2.523E-11	2.771E-11	2.320E-15	1.000E+00	9.950E-12	2.330E-11
BREAST	1.240E-13	2.414E-11	2.652E-11	2.220E-15	1.000E+00	1.410E-11	2.520E-11
LUNGS	1.090E-13	2.305E-11	2.532E-11	2.120E-15	1.000E+00	2.710E-10	2.640E-11
RED MARR	1.070E-13	2.360E-11	2.592E-11	2.170E-15	1.000E+00	1.400E-11	2.460E-11
BONE SUR	1.730E-13	3.327E-11	3.655E-11	3.060E-15	1.000E+00	1.240E-11	2.190E-11
THYROID	1.120E-13	2.381E-11	2.616E-11	2.190E-15	1.000E+00	1.740E-09	3.870E-09
REMAINDER	1.050E-13	2.283E-11	2.509E-11	2.100E-15	1.000E+00	3.780E-11	1.650E-10
EFFECTIVE	1.120E-13	2.403E-11	2.640E-11	2.210E-15	1.000E+00	1.030E-10	1.820E-10
SKIN(FGR)	1.580E-13	8.199E-11	9.007E-11	7.540E-15	1.000E+00	0.000E+00	0.000E+00
I-133							

GONADS	2.870E-14	1.585E-11	6.748E-11	6.270E-16	1.000E+00	1.950E-11	3.630E-11
BREAST	3.280E-14	1.519E-11	6.468E-11	6.010E-16	1.000E+00	2.940E-11	4.680E-11
LUNGS	2.860E-14	1.446E-11	6.156E-11	5.720E-16	1.000E+00	8.200E-10	4.530E-11
RED MARR	2.770E-14	1.466E-11	6.242E-11	5.800E-16	1.000E+00	2.720E-11	4.300E-11
BONE SUR	4.870E-14	2.161E-11	9.202E-11	8.550E-16	1.000E+00	2.520E-11	4.070E-11
THYROID	2.930E-14	1.502E-11	6.393E-11	5.940E-16	1.000E+00	4.860E-08	9.100E-08
REMAINDER	2.730E-14	1.418E-11	6.038E-11	5.610E-16	1.000E+00	5.000E-11	1.550E-10
EFFECTIVE	2.940E-14	1.509E-11	6.425E-11	5.970E-16	1.000E+00	1.580E-09	2.800E-09
SKIN(FGR)	5.830E-14	1.150E-10	4.897E-10	4.550E-15	1.000E+00	0.000E+00	0.000E+00
I-134							
GONADS	1.270E-13	1.200E-11	1.202E-11	2.640E-15	1.000E+00	4.250E-12	1.100E-11
BREAST	1.440E-13	1.145E-11	1.147E-11	2.520E-15	1.000E+00	6.170E-12	1.170E-11
LUNGS	1.270E-13	1.100E-11	1.102E-11	2.420E-15	1.000E+00	1.430E-10	1.260E-11
RED MARR	1.250E-13	1.127E-11	1.129E-11	2.480E-15	1.000E+00	6.080E-12	1.090E-11
BONE SUR	1.960E-13	1.568E-11	1.571E-11	3.450E-15	1.000E+00	5.310E-12	9.320E-12
THYROID	1.300E-13	1.127E-11	1.129E-11	2.480E-15	1.000E+00	2.880E-10	6.210E-10
REMAINDER	1.220E-13	1.091E-11	1.093E-11	2.400E-15	1.000E+00	2.270E-11	1.340E-10
EFFECTIVE	1.300E-13	1.150E-11	1.152E-11	2.530E-15	1.000E+00	3.550E-11	6.660E-11
SKIN(FGR)	1.870E-13	4.477E-11	4.485E-11	9.850E-15	1.000E+00	0.000E+00	0.000E+00
I-135							
GONADS	8.078E-14	3.113E-11	5.489E-11	1.599E-15	1.000E+00	1.700E-11	3.610E-11
BREAST	9.143E-14	2.971E-11	5.240E-11	1.526E-15	1.000E+00	2.340E-11	3.850E-11
LUNGS	8.145E-14	2.886E-11	5.089E-11	1.482E-15	1.000E+00	4.410E-10	3.750E-11
RED MARR	8.054E-14	2.965E-11	5.228E-11	1.523E-15	1.000E+00	2.240E-11	3.650E-11
BONE SUR	1.184E-13	3.983E-11	7.024E-11	2.046E-15	1.000E+00	2.010E-11	3.360E-11
THYROID	8.324E-14	2.852E-11	5.030E-11	1.465E-15	1.000E+00	8.460E-09	1.790E-08
REMAINDER	7.861E-14	2.883E-11	5.084E-11	1.481E-15	1.000E+00	4.700E-11	1.540E-10
EFFECTIVE	8.294E-14	2.989E-11	5.271E-11	1.535E-15	1.000E+00	3.320E-10	6.080E-10
SKIN(FGR)	1.156E-13	9.826E-11	1.733E-10	5.047E-15	1.000E+00	0.000E+00	0.000E+00
Xe-133							
GONADS	1.610E-15	1.465E-12	2.052E-11	5.200E-17	1.000E+00	0.000E+00	0.000E+00
BREAST	1.960E-15	1.505E-12	2.107E-11	5.340E-17	1.000E+00	0.000E+00	0.000E+00
LUNGS	1.320E-15	1.045E-12	1.464E-11	3.710E-17	1.000E+00	0.000E+00	0.000E+00
RED MARR	1.070E-15	8.791E-13	1.231E-11	3.120E-17	1.000E+00	0.000E+00	0.000E+00
BONE SUR	5.130E-15	4.254E-12	5.958E-11	1.510E-16	1.000E+00	0.000E+00	0.000E+00
THYROID	1.510E-15	1.181E-12	1.653E-11	4.190E-17	1.000E+00	0.000E+00	0.000E+00
REMAINDER	1.240E-15	1.042E-12	1.460E-11	3.700E-17	1.000E+00	0.000E+00	0.000E+00
EFFECTIVE	1.560E-15	1.299E-12	1.819E-11	4.610E-17	1.000E+00	0.000E+00	0.000E+00
SKIN(FGR)	4.970E-15	1.953E-12	2.734E-11	6.930E-17	1.000E+00	0.000E+00	0.000E+00
Xe-135							
GONADS	1.170E-14	5.455E-12	1.194E-11	2.530E-16	1.000E+00	0.000E+00	0.000E+00
BREAST	1.330E-14	5.325E-12	1.166E-11	2.470E-16	1.000E+00	0.000E+00	0.000E+00
LUNGS	1.130E-14	4.959E-12	1.086E-11	2.300E-16	1.000E+00	0.000E+00	0.000E+00
RED MARR	1.070E-14	4.959E-12	1.086E-11	2.300E-16	1.000E+00	0.000E+00	0.000E+00
BONE SUR	2.570E-14	9.120E-12	1.997E-11	4.230E-16	1.000E+00	0.000E+00	0.000E+00
THYROID	1.180E-14	5.023E-12	1.100E-11	2.330E-16	1.000E+00	0.000E+00	0.000E+00
REMAINDER	1.080E-14	4.829E-12	1.058E-11	2.240E-16	1.000E+00	0.000E+00	0.000E+00
EFFECTIVE	1.190E-14	5.217E-12	1.142E-11	2.420E-16	1.000E+00	0.000E+00	0.000E+00
SKIN(FGR)	3.120E-14	4.506E-11	9.867E-11	2.090E-15	1.000E+00	0.000E+00	0.000E+00
Cs-134							
GONADS	7.400E-14	4.607E-11	9.646E-10	1.600E-15	1.000E+00	1.300E-08	2.060E-08
BREAST	8.430E-14	4.406E-11	9.224E-10	1.530E-15	1.000E+00	1.080E-08	1.720E-08
LUNGS	7.370E-14	4.204E-11	8.802E-10	1.460E-15	1.000E+00	1.180E-08	1.760E-08
RED MARR	7.190E-14	4.262E-11	8.922E-10	1.480E-15	1.000E+00	1.180E-08	1.870E-08
BONE SUR	1.200E-13	6.105E-11	1.278E-09	2.120E-15	1.000E+00	1.100E-08	1.740E-08
THYROID	7.570E-14	4.377E-11	9.163E-10	1.520E-15	1.000E+00	1.110E-08	1.760E-08
REMAINDER	7.060E-14	4.147E-11	8.681E-10	1.440E-15	1.000E+00	1.390E-08	2.210E-08
EFFECTIVE	7.570E-14	4.377E-11	9.163E-10	1.520E-15	1.000E+00	1.250E-08	1.980E-08
SKIN(FGR)	9.450E-14	6.249E-11	1.308E-09	2.170E-15	1.000E+00	0.000E+00	0.000E+00
Cs-136							
GONADS	1.040E-13	6.223E-11	1.102E-09	2.180E-15	1.000E+00	1.880E-09	3.040E-09
BREAST	1.180E-13	5.966E-11	1.056E-09	2.090E-15	1.000E+00	1.670E-09	2.650E-09
LUNGS	1.040E-13	5.710E-11	1.011E-09	2.000E-15	1.000E+00	2.320E-09	2.620E-09
RED MARR	1.010E-13	5.824E-11	1.031E-09	2.040E-15	1.000E+00	1.860E-09	2.950E-09
BONE SUR	1.660E-13	8.422E-11	1.491E-09	2.950E-15	1.000E+00	1.700E-09	2.710E-09
THYROID	1.070E-13	5.852E-11	1.036E-09	2.050E-15	1.000E+00	1.730E-09	2.740E-09
REMAINDER	9.950E-14	5.652E-11	1.001E-09	1.980E-15	1.000E+00	2.190E-09	3.520E-09
EFFECTIVE	1.060E-13	5.966E-11	1.056E-09	2.090E-15	1.000E+00	1.980E-09	3.040E-09
SKIN(FGR)	1.250E-13	7.251E-11	1.284E-09	2.540E-15	1.000E+00	0.000E+00	0.000E+00

Cs-137						
GONADS	2.669E-14	1.669E-11	3.530E-10	5.840E-16-1.000E+00	8.760E-09	1.390E-08
BREAST	3.047E-14	1.596E-11	3.376E-10	5.585E-16-1.000E+00	7.840E-09	1.240E-08
LUNGS	2.649E-14	1.517E-11	3.209E-10	5.309E-16-1.000E+00	8.820E-09	1.270E-08
RED MARR	2.583E-14	1.542E-11	3.260E-10	5.394E-16-1.000E+00	8.300E-09	1.320E-08
BONE SUR	4.382E-14	2.238E-11	4.734E-10	7.832E-16-1.000E+00	7.940E-09	1.260E-08
THYROID	2.725E-14	1.588E-11	3.358E-10	5.556E-16-1.000E+00	7.930E-09	1.260E-08
REMAINDER	2.536E-14	1.490E-11	3.152E-10	5.215E-16-1.000E+00	9.120E-09	1.450E-08
EFFECTIVE	2.725E-14	1.585E-11	3.353E-10	5.546E-16-1.000E+00	8.630E-09	1.350E-08
SKIN(FGR)	4.392E-14	5.253E-11	1.110E-09	1.836E-15-1.000E+00	0.000E+00	0.000E+00
Ba-139						
GONADS	2.130E-15	3.368E-13	3.429E-13	4.790E-17-1.000E+00	2.560E-12	1.560E-12
BREAST	2.450E-15	3.297E-13	3.357E-13	4.690E-17-1.000E+00	2.460E-12	5.170E-13
LUNGS	2.030E-15	3.002E-13	3.057E-13	4.270E-17-1.000E+00	2.530E-10	3.890E-13
RED MARR	1.870E-15	2.932E-13	2.985E-13	4.170E-17-1.000E+00	3.410E-12	8.590E-13
BONE SUR	5.290E-15	6.841E-13	6.965E-13	9.730E-17-1.000E+00	2.490E-12	4.380E-13
THYROID	2.130E-15	3.044E-13	3.100E-13	4.330E-17-1.000E+00	2.400E-12	2.660E-13
REMAINDER	1.920E-15	2.932E-13	2.985E-13	4.170E-17-1.000E+00	4.820E-11	3.570E-10
EFFECTIVE	2.170E-15	3.227E-13	3.286E-13	4.590E-17-1.000E+00	4.640E-11	1.080E-10
SKIN(FGR)	6.160E-14	7.241E-11	7.373E-11	1.030E-14-1.000E+00	0.000E+00	0.000E+00
Ba-140						
GONADS	8.410E-15	5.451E-12	9.607E-11	1.910E-16-1.000E+00	4.300E-10	9.960E-10
BREAST	9.640E-15	5.280E-12	9.305E-11	1.850E-16-1.000E+00	2.870E-10	1.590E-10
LUNGS	8.270E-15	4.852E-12	8.550E-11	1.700E-16-1.000E+00	1.660E-09	6.630E-11
RED MARR	7.930E-15	4.880E-12	8.601E-11	1.710E-16-1.000E+00	1.290E-09	4.390E-10
BONE SUR	1.550E-14	8.020E-12	1.413E-10	2.810E-16-1.000E+00	2.410E-09	5.530E-10
THYROID	8.530E-15	5.109E-12	9.003E-11	1.790E-16-1.000E+00	2.560E-10	5.250E-11
REMAINDER	7.890E-15	4.766E-12	8.399E-11	1.670E-16-1.000E+00	1.410E-09	7.370E-09
EFFECTIVE	8.580E-15	5.137E-12	9.053E-11	1.800E-16-1.000E+00	1.010E-09	2.560E-09
SKIN(FGR)	2.520E-14	5.565E-11	9.808E-10	1.950E-15-1.000E+00	0.000E+00	0.000E+00
La-140						
GONADS	1.140E-13	6.027E-11	4.425E-10	2.240E-15-1.000E+00	4.540E-10	1.340E-09
BREAST	1.290E-13	5.758E-11	4.228E-10	2.140E-15-1.000E+00	1.450E-10	1.800E-10
LUNGS	1.150E-13	5.596E-11	4.109E-10	2.080E-15-1.000E+00	4.210E-09	4.010E-11
RED MARR	1.140E-13	5.731E-11	4.208E-10	2.130E-15-1.000E+00	2.140E-10	2.810E-10
BONE SUR	1.690E-13	7.776E-11	5.709E-10	2.890E-15-1.000E+00	1.410E-10	9.770E-11
THYROID	1.180E-13	5.462E-11	4.010E-10	2.030E-15-1.000E+00	6.870E-11	6.400E-12
REMAINDER	1.110E-13	5.569E-11	4.089E-10	2.070E-15-1.000E+00	2.120E-09	6.260E-09
EFFECTIVE	1.170E-13	5.812E-11	4.267E-10	2.160E-15-1.000E+00	1.310E-09	2.280E-09
SKIN(FGR)	1.660E-13	2.217E-10	1.628E-09	8.240E-15-1.000E+00	0.000E+00	0.000E+00
La-141						
GONADS	2.330E-15	7.315E-13	9.675E-13	4.740E-17-1.000E+00	1.010E-11	3.770E-12
BREAST	2.640E-15	7.007E-13	9.267E-13	4.540E-17-1.000E+00	9.840E-12	7.070E-13
LUNGS	2.340E-15	6.713E-13	8.879E-13	4.350E-17-1.000E+00	6.460E-10	2.720E-13
RED MARR	2.310E-15	6.852E-13	9.063E-13	4.440E-17-1.000E+00	2.930E-11	1.070E-12
BONE SUR	3.490E-15	9.923E-13	1.312E-12	6.430E-17-1.000E+00	1.200E-10	6.060E-13
THYROID	2.390E-15	6.590E-13	8.716E-13	4.270E-17-1.000E+00	9.400E-12	5.290E-14
REMAINDER	2.260E-15	6.682E-13	8.838E-13	4.330E-17-1.000E+00	2.280E-10	1.240E-09
EFFECTIVE	2.390E-15	7.007E-13	9.267E-13	4.540E-17-1.000E+00	1.570E-10	3.740E-10
SKIN(FGR)	6.580E-14	1.667E-10	2.204E-10	1.080E-14-1.000E+00	0.000E+00	0.000E+00
La-142						
GONADS	1.400E-13	1.978E-11	2.034E-11	2.540E-15-1.000E+00	1.660E-11	6.990E-11
BREAST	1.570E-13	1.885E-11	1.938E-11	2.420E-15-1.000E+00	1.130E-11	1.540E-11
LUNGS	1.420E-13	1.846E-11	1.898E-11	2.370E-15-1.000E+00	3.010E-10	8.400E-12
RED MARR	1.420E-13	1.900E-11	1.954E-11	2.440E-15-1.000E+00	1.360E-11	1.930E-11
BONE SUR	1.950E-13	2.484E-11	2.554E-11	3.190E-15-1.000E+00	1.110E-11	7.400E-12
THYROID	1.450E-13	1.768E-11	1.818E-11	2.270E-15-1.000E+00	8.740E-12	1.160E-12
REMAINDER	1.380E-13	1.853E-11	1.906E-11	2.380E-15-1.000E+00	8.070E-11	5.200E-10
EFFECTIVE	1.440E-13	1.916E-11	1.970E-11	2.460E-15-1.000E+00	6.840E-11	1.790E-10
SKIN(FGR)	2.160E-13	9.111E-11	9.368E-11	1.170E-14-1.000E+00	0.000E+00	0.000E+00
Ce-141						
GONADS	3.380E-15	2.213E-12	4.332E-11	7.710E-17-1.000E+00	5.540E-11	1.080E-10
BREAST	3.930E-15	2.170E-12	4.247E-11	7.560E-17-1.000E+00	4.460E-11	1.110E-11
LUNGS	3.170E-15	1.951E-12	3.820E-11	6.800E-17-1.000E+00	1.670E-08	1.430E-12
RED MARR	2.830E-15	1.860E-12	3.641E-11	6.480E-17-1.000E+00	8.960E-11	3.390E-11
BONE SUR	9.410E-15	5.166E-12	1.011E-10	1.800E-16-1.000E+00	2.540E-10	2.300E-11
THYROID	3.350E-15	2.003E-12	3.922E-11	6.980E-17-1.000E+00	2.550E-11	1.800E-13
REMAINDER	2.980E-15	1.894E-12	3.708E-11	6.600E-17-1.000E+00	1.260E-09	2.500E-09
EFFECTIVE	3.430E-15	2.118E-12	4.146E-11	7.380E-17-1.000E+00	2.420E-09	7.830E-10
SKIN(FGR)	1.020E-14	3.788E-12	7.416E-11	1.320E-16-1.000E+00	0.000E+00	0.000E+00

Ce-143							
GONADS	1.280E-14	7.900E-12	4.958E-11	2.980E-16	1.000E+00	7.530E-11	2.120E-10
BREAST	1.470E-14	7.688E-12	4.825E-11	2.900E-16	1.000E+00	1.660E-11	2.320E-11
LUNGS	1.230E-14	6.893E-12	4.325E-11	2.600E-16	1.000E+00	3.880E-09	3.820E-12
RED MARR	1.170E-14	6.787E-12	4.259E-11	2.560E-16	1.000E+00	2.960E-11	5.070E-11
BONE SUR	2.520E-14	1.323E-11	8.302E-11	4.990E-16	1.000E+00	1.640E-11	1.610E-11
THYROID	1.280E-14	7.211E-12	4.525E-11	2.720E-16	1.000E+00	6.230E-12	4.350E-13
REMAINDER	1.170E-14	6.734E-12	4.226E-11	2.540E-16	1.000E+00	1.420E-09	3.890E-09
EFFECTIVE	1.290E-14	7.396E-12	4.642E-11	2.790E-16	1.000E+00	9.160E-10	1.230E-09
SKIN(FGR)	3.960E-14	1.058E-10	6.638E-10	3.990E-15	1.000E+00	0.000E+00	0.000E+00
Ce-144							
GONADS	2.725E-15	6.328E-13	1.319E-11	6.088E-17	1.000E+00	2.390E-10	6.987E-11
BREAST	3.129E-15	6.274E-13	1.307E-11	5.922E-17	1.000E+00	3.480E-10	1.223E-11
LUNGS	2.639E-15	5.228E-13	1.089E-11	5.362E-17	1.000E+00	7.911E-07	6.551E-12
RED MARR	2.507E-15	4.755E-13	9.907E-12	5.247E-17	1.000E+00	2.880E-09	8.923E-11
BONE SUR	5.441E-15	1.646E-12	3.429E-11	1.127E-16	1.000E+00	4.720E-09	1.280E-10
THYROID	2.753E-15	5.529E-13	1.152E-11	5.418E-17	1.000E+00	2.920E-10	5.154E-12
REMAINDER	2.534E-15	5.086E-13	1.060E-11	5.283E-17	1.000E+00	1.910E-08	1.890E-08
EFFECTIVE	2.773E-15	5.909E-13	1.231E-11	5.766E-17	1.000E+00	1.010E-07	5.711E-09
SKIN(FGR)	8.574E-14	7.648E-13	1.594E-11	1.250E-14	1.000E+00	0.000E+00	0.000E+00
Pr-143							
GONADS	2.130E-17	2.264E-14	4.032E-13	7.930E-19	1.000E+00	4.370E-18	8.990E-18
BREAST	2.550E-17	2.330E-14	4.149E-13	8.160E-19	1.000E+00	2.220E-18	1.090E-18
LUNGS	1.860E-17	1.642E-14	2.923E-13	5.750E-19	1.000E+00	1.330E-08	1.910E-19
RED MARR	1.620E-17	1.493E-14	2.659E-13	5.230E-19	1.000E+00	1.480E-11	1.030E-12
BONE SUR	5.930E-17	5.454E-14	9.711E-13	1.910E-18	1.000E+00	1.490E-11	1.030E-12
THYROID	2.050E-17	1.802E-14	3.208E-13	6.310E-19	1.000E+00	1.680E-18	2.660E-20
REMAINDER	1.760E-17	1.642E-14	2.923E-13	5.750E-19	1.000E+00	1.970E-09	4.220E-09
EFFECTIVE	2.100E-17	2.002E-14	3.564E-13	7.010E-19	1.000E+00	2.190E-09	1.270E-09
SKIN(FGR)	1.760E-14	5.711E-11	1.017E-09	2.000E-15	1.000E+00	0.000E+00	0.000E+00
Nd-147							
GONADS	6.130E-15	4.218E-12	7.235E-11	1.480E-16	1.000E+00	8.410E-11	1.790E-10
BREAST	7.120E-15	4.132E-12	7.088E-11	1.450E-16	1.000E+00	3.450E-11	1.870E-11
LUNGS	5.820E-15	3.648E-12	6.257E-11	1.280E-16	1.000E+00	1.060E-08	2.440E-12
RED MARR	5.400E-15	3.505E-12	6.013E-11	1.230E-16	1.000E+00	9.190E-11	5.050E-11
BONE SUR	1.320E-14	8.265E-12	1.418E-10	2.900E-16	1.000E+00	3.260E-10	2.220E-11
THYROID	6.120E-15	3.876E-12	6.648E-11	1.360E-16	1.000E+00	1.820E-11	2.640E-13
REMAINDER	5.530E-15	3.562E-12	6.111E-11	1.250E-16	1.000E+00	1.760E-09	3.760E-09
EFFECTIVE	6.190E-15	3.961E-12	6.795E-11	1.390E-16	1.000E+00	1.850E-09	1.180E-09
SKIN(FGR)	1.950E-14	3.135E-11	5.377E-10	1.100E-15	1.000E+00	0.000E+00	0.000E+00
Np-239							
GONADS	7.530E-15	4.691E-12	4.380E-11	1.710E-16	1.000E+00	7.450E-11	1.620E-10
BREAST	8.730E-15	4.636E-12	4.329E-11	1.690E-16	1.000E+00	1.630E-11	1.720E-11
LUNGS	7.180E-15	4.115E-12	3.842E-11	1.500E-16	1.000E+00	2.360E-09	2.400E-12
RED MARR	6.500E-15	4.005E-12	3.740E-11	1.460E-16	1.000E+00	2.080E-10	4.660E-11
BONE SUR	2.000E-14	1.001E-11	9.349E-11	3.650E-16	1.000E+00	2.030E-09	3.590E-11
THYROID	7.520E-15	4.197E-12	3.919E-11	1.530E-16	1.000E+00	7.620E-12	2.070E-13
REMAINDER	6.760E-15	4.005E-12	3.740E-11	1.460E-16	1.000E+00	9.590E-10	2.770E-09
EFFECTIVE	7.690E-15	4.471E-12	4.175E-11	1.630E-16	1.000E+00	6.780E-10	8.820E-10
SKIN(FGR)	1.600E-14	7.215E-12	6.737E-11	2.630E-16	1.000E+00	0.000E+00	0.000E+00
Pu-238							
GONADS	6.560E-18	4.291E-14	9.011E-13	1.490E-18	1.000E+00	1.040E-05	2.330E-09
BREAST	1.270E-17	5.558E-14	1.167E-12	1.930E-18	1.000E+00	4.400E-10	1.800E-13
LUNGS	1.060E-18	2.267E-15	4.759E-14	7.870E-20	1.000E+00	3.200E-04	8.640E-14
RED MARR	1.680E-18	5.587E-15	1.173E-13	1.940E-19	1.000E+00	5.800E-05	1.270E-08
BONE SUR	9.300E-18	3.514E-14	7.378E-13	1.220E-18	1.000E+00	7.250E-04	1.580E-07
THYROID	4.010E-18	9.792E-15	2.056E-13	3.400E-19	1.000E+00	3.860E-10	7.990E-14
REMAINDER	1.990E-18	9.216E-15	1.935E-13	3.200E-19	1.000E+00	2.740E-05	2.180E-08
EFFECTIVE	4.880E-18	2.413E-14	5.068E-13	8.380E-19	1.000E+00	7.790E-05	1.340E-08
SKIN(FGR)	4.090E-17	2.776E-13	5.830E-12	9.640E-18	1.000E+00	0.000E+00	0.000E+00
Pu-239							
GONADS	4.840E-18	1.768E-14	3.713E-13	6.140E-19	1.000E+00	1.200E-05	2.640E-09
BREAST	7.550E-18	2.238E-14	4.699E-13	7.770E-19	1.000E+00	3.990E-10	1.210E-13
LUNGS	2.650E-18	2.267E-15	4.760E-14	7.870E-20	1.000E+00	3.230E-04	7.890E-14
RED MARR	2.670E-18	3.456E-15	7.258E-14	1.200E-19	1.000E+00	6.570E-05	1.410E-08
BONE SUR	9.470E-18	1.673E-14	3.514E-13	5.810E-19	1.000E+00	8.210E-04	1.760E-07
THYROID	3.880E-18	5.126E-15	1.077E-13	1.780E-19	1.000E+00	3.750E-10	7.500E-14
REMAINDER	2.860E-18	4.838E-15	1.016E-13	1.680E-19	1.000E+00	3.020E-05	2.120E-08
EFFECTIVE	4.240E-18	1.057E-14	2.220E-13	3.670E-19	1.000E+00	8.330E-05	1.400E-08
SKIN(FGR)	1.860E-17	1.057E-13	2.220E-12	3.670E-18	1.000E+00	0.000E+00	0.000E+00

Pu-240							
GONADS	6.360E-18	4.118E-14	8.649E-13	1.430E-18	-1.000E+00	1.200E-05	2.640E-09
BREAST	1.230E-17	5.328E-14	1.119E-12	1.850E-18	-1.000E+00	4.330E-10	1.730E-13
LUNGS	1.090E-18	2.249E-15	4.723E-14	7.810E-20	-1.000E+00	3.230E-04	8.220E-14
RED MARR	1.650E-18	5.386E-15	1.131E-13	1.870E-19	-1.000E+00	6.570E-05	1.410E-08
BONE SUR	9.260E-18	3.398E-14	7.137E-13	1.180E-18	-1.000E+00	8.210E-04	1.760E-07
THYROID	3.920E-18	9.446E-15	1.984E-13	3.280E-19	-1.000E+00	3.760E-10	7.510E-14
REMAINDER	1.960E-18	8.870E-15	1.863E-13	3.080E-19	-1.000E+00	3.020E-05	2.130E-08
EFFECTIVE	4.750E-18	2.313E-14	4.857E-13	8.030E-19	-1.000E+00	8.330E-05	1.400E-08
SKIN(FGR)	3.920E-17	2.644E-13	5.552E-12	9.180E-18	-1.000E+00	0.000E+00	0.000E+00
Pu-241							
GONADS	7.190E-20	6.653E-17	1.396E-15	2.310E-21	-1.000E+00	2.760E-07	5.660E-11
BREAST	8.670E-20	7.229E-17	1.517E-15	2.510E-21	-1.000E+00	2.140E-11	2.790E-15
LUNGS	6.480E-20	4.090E-17	8.584E-16	1.420E-21	-1.000E+00	3.180E-06	4.480E-15
RED MARR	5.630E-20	4.003E-17	8.403E-16	1.390E-21	-1.000E+00	1.430E-06	2.780E-10
BONE SUR	2.190E-19	1.385E-16	2.908E-15	4.810E-21	-1.000E+00	1.780E-05	3.480E-09
THYROID	6.980E-20	4.522E-17	9.491E-16	1.570E-21	-1.000E+00	9.150E-12	1.010E-15
REMAINDER	6.090E-20	4.291E-17	9.007E-16	1.490E-21	-1.000E+00	6.020E-07	1.850E-10
EFFECTIVE	7.250E-20	5.558E-17	1.167E-15	1.930E-21	-1.000E+00	1.340E-06	2.070E-10
SKIN(FGR)	1.170E-19	2.033E-16	4.268E-15	7.060E-21	-1.000E+00	0.000E+00	0.000E+00
Am-241							
GONADS	8.580E-16	9.360E-13	1.966E-11	3.250E-17	-1.000E+00	3.250E-05	2.700E-07
BREAST	1.070E-15	1.014E-12	2.129E-11	3.520E-17	-1.000E+00	2.670E-09	2.620E-11
LUNGS	6.740E-16	5.789E-13	1.216E-11	2.010E-17	-1.000E+00	1.840E-05	3.360E-11
RED MARR	5.210E-16	4.838E-13	1.016E-11	1.680E-17	-1.000E+00	1.740E-04	1.450E-06
BONE SUR	2.870E-15	2.678E-12	5.625E-11	9.300E-17	-1.000E+00	2.170E-03	1.810E-05
THYROID	7.830E-16	6.365E-13	1.337E-11	2.210E-17	-1.000E+00	1.600E-09	1.320E-11
REMAINDER	6.340E-16	5.933E-13	1.246E-11	2.060E-17	-1.000E+00	7.820E-05	6.660E-07
EFFECTIVE	8.180E-16	7.920E-13	1.663E-11	2.750E-17	-1.000E+00	1.200E-04	9.840E-07
SKIN(FGR)	1.280E-15	2.396E-12	5.032E-11	8.320E-17	-1.000E+00	0.000E+00	0.000E+00
Cm-242							
GONADS	7.830E-18	4.893E-14	1.013E-12	1.700E-18	-1.000E+00	5.700E-07	5.200E-09
BREAST	1.480E-17	6.159E-14	1.275E-12	2.140E-18	-1.000E+00	9.440E-10	8.950E-12
LUNGS	1.130E-18	3.022E-15	6.257E-14	1.050E-19	-1.000E+00	1.550E-05	8.840E-12
RED MARR	1.890E-18	6.562E-15	1.359E-13	2.280E-19	-1.000E+00	3.900E-06	3.570E-08
BONE SUR	1.060E-17	4.231E-14	8.759E-13	1.470E-18	-1.000E+00	4.870E-05	4.460E-07
THYROID	4.910E-18	1.261E-14	2.610E-13	4.380E-19	-1.000E+00	9.410E-10	8.820E-12
REMAINDER	2.270E-18	1.079E-14	2.235E-13	3.750E-19	-1.000E+00	2.450E-06	4.020E-08
EFFECTIVE	5.690E-18	2.751E-14	5.697E-13	9.560E-19	-1.000E+00	4.670E-06	3.100E-08
SKIN(FGR)	4.290E-17	2.700E-13	5.589E-12	9.380E-18	-1.000E+00	0.000E+00	0.000E+00
Cm-244							
GONADS	6.900E-18	4.522E-14	9.492E-13	1.570E-18	-1.000E+00	1.590E-05	1.330E-07
BREAST	1.330E-17	5.702E-14	1.197E-12	1.980E-18	-1.000E+00	1.040E-09	8.820E-12
LUNGS	7.080E-19	2.592E-15	5.441E-14	9.000E-20	-1.000E+00	1.930E-05	8.810E-12
RED MARR	1.460E-18	5.875E-15	1.233E-13	2.040E-19	-1.000E+00	9.380E-05	7.820E-07
BONE SUR	8.820E-18	3.859E-14	8.101E-13	1.340E-18	-1.000E+00	1.170E-03	9.770E-06
THYROID	4.190E-18	1.146E-14	2.406E-13	3.980E-19	-1.000E+00	1.010E-09	8.440E-12
REMAINDER	1.810E-18	9.821E-15	2.062E-13	3.410E-19	-1.000E+00	4.780E-05	4.150E-07
EFFECTIVE	4.910E-18	2.529E-14	5.308E-13	8.780E-19	-1.000E+00	6.700E-05	5.450E-07
SKIN(FGR)	3.910E-17	2.506E-13	5.260E-12	8.700E-18	-1.000E+00	0.000E+00	0.000E+00

Columbia_1f.psf

```
Radtrad 3.03 4/15/2001
Columbia AST - Failed Line - Filtered
Nuclide Inventory File:
c:\program files\radtrad303\enw\columbia.nif
Plant Power Level:
 3.5560E+03
Compartments:
  7
Compartment 1:
DW
  3
 2.0050E+05
  1
  0
  0
  0
  0
Compartment 2:
WW
  3
 1.4420E+05
  0
  0
  0
  0
  0
Compartment 3:
RB
  3
 5.0000E+03
  0
  0
  0
  0
  0
Compartment 4:
SP
  3
 1.3730E+05
  0
  0
  0
  0
  0
Compartment 5:
CR
  1
 2.1400E+05
  0
  0
  0
  0
  0
Compartment 6:
Enviro
  2
 0.0000E+00
  0
  0
  0
  0
  0
Compartment 7:
Dummy
  3
 1.0000E+06
  0
  0
```

```
  0
  0
  0
Pathways:
 12
Pathway 1:
DW to WW
  1
  2
  2
Pathway 2:
WW to DW
  2
  1
  2
Pathway 3:
Failed SL to Enviro
  1
  6
  2
Pathway 4:
Intact SLs to Dummy
  1
  7
  2
Pathway 5:
DW to RB
  1
  3
  2
Pathway 6:
WW to RB
  2
  3
  2
Pathway 7:
Bypass DW to Dummy
  1
  7
  2
Pathway 8:
Bypass WW to Dummy
  2
  7
  2
Pathway 9:
SP to RB
  4
  3
  2
Pathway 10:
RB SGTS to Dummy
  3
  7
  2
Pathway 11:
Enviro to CR (filtered)
  6
  5
  2
Pathway 12:
CR to Enviro
  5
  6
  2
End of Plant Model File
Scenario Description Name:

Plant Model Filename:
```

```
Source Term:
  1
  1   1.0000E+00
c:\program files\radtrad303\defaults\fgr11&12.inp
c:\program files\radtrad303\enw\columbia.rft
  0.0000E+00
  1
  9.5000E-01   4.8500E-02   1.5000E-03   1.0000E+00
Overlying Pool:
  0
  0.0000E+00
  0
  0
  0
  0
Compartments:
  7
Compartment 1:
  0
  1
  1
  0.0000E+00
  5
  0.0000E+00   0.0000E+00
  2.5000E-01   6.2000E+00
  2.4400E+00   6.2000E-01
  2.4000E+01   0.0000E+00
  7.2000E+02   0.0000E+00
  1
  0.0000E+00
  5
  0.0000E+00   0.0000E+00
  2.5000E-01   6.2000E+00
  2.4400E+00   6.2000E-01
  2.4000E+01   0.0000E+00
  7.2000E+02   0.0000E+00
  1
  0.0000E+00
  0
  0
  0
  0
  0
Compartment 2:
  0
  1
  0
  0
  0
  0
  0
  0
  0
Compartment 3:
  0
  1
  0
  0
  0
  0
  0
  0
  0
Compartment 4:
  0
  1
  0
  0
  0
  0
```

```
  0
  0
  .
  0
Compartment 5:
  0
  1
  0
  0
  0
  0
  0
  0
  0
Compartment 6:
  0
  1
  0
  0
  0
  0
  0
  0
  0
Compartment 7:
  0
  1
  0
  0
  0
  0
  0
  0
  0
Pathways:
 12
Pathway 1:
  0

  0
  0
  0
  0
  1
  3
  0.0000E+00   0.0000E+00   0.0000E+00   0.0000E+00   0.0000E+00
  2.0333E+00   1.4420E+05   0.0000E+00   0.0000E+00   0.0000E+00
  7.2000E+02   1.4420E+05   0.0000E+00   0.0000E+00   0.0000E+00
  0
  0
  0
  0
  0
  0
Pathway 2:
  0
  0
  0
  0
  0
  1
  3
  0.0000E+00   0.0000E+00   0.0000E+00   0.0000E+00   0.0000E+00
  2.0333E+00   1.4420E+05   0.0000E+00   0.0000E+00   0.0000E+00
  7.2000E+02   1.4420E+05   0.0000E+00   0.0000E+00   0.0000E+00
  0
  0
  0
  0
  0
```

```
  0
Pathway 3:
  0
  0
  0
  0
  0
  1
  3
  0.0000E+00   1.3800E-01   0.0000E+00   0.0000E+00   0.0000E+00
  2.4000E+01   6.9200E-02   0.0000E+00   0.0000E+00   0.0000E+00
  7.2000E+02   6.9200E-02   0.0000E+00   0.0000E+00   0.0000E+00
  0
  0
  0
  0
  0
  0
Pathway 4:
  0
  0
  0
  0
  0
  1
  3
  0.0000E+00   4.1500E-01   8.9700E+01   4.2800E+01   1.0000E-01
  2.4000E+01   2.0800E-01   8.9700E+01   4.2800E+01   1.0000E-01
  7.2000E+02   2.0800E-01   8.9700E+01   4.2800E+01   1.0000E-01
  0
  0
  0
  0
  0
  0
Pathway 5:
  0
  0
  0
  0
  0
  1
  4
  0.0000E+00   0.0000E+00   0.0000E+00   0.0000E+00   0.0000E+00
  3.3300E-01   6.9600E-01   0.0000E+00   0.0000E+00   0.0000E+00
  2.4000E+01   3.4800E-01   0.0000E+00   0.0000E+00   0.0000E+00
  7.2000E+02   3.4800E-01   0.0000E+00   0.0000E+00   0.0000E+00
  0
  0
  0
  0
  0
  0
Pathway 6:
  0
  0
  0
  0
  0
  1
  4
  0.0000E+00   0.0000E+00   0.0000E+00   0.0000E+00   0.0000E+00
  3.3300E-01   5.0000E-01   0.0000E+00   0.0000E+00   0.0000E+00
  2.4000E+01   2.5000E-01   0.0000E+00   0.0000E+00   0.0000E+00
  7.2000E+02   2.5000E-01   0.0000E+00   0.0000E+00   0.0000E+00
  0
  0
  0
  0
  0
```

```
  0
Pathway 7:
  0
  0
  0
  0
  0
  1
  4
  0.0000E+00   7.5200E-01   0.0000E+00   0.0000E+00   0.0000E+00
  3.3300E-01   5.6000E-02   0.0000E+00   0.0000E+00   0.0000E+00
  2.4000E+01   2.8000E-02   0.0000E+00   0.0000E+00   0.0000E+00
  7.2000E+02   2.8000E-02   0.0000E+00   0.0000E+00   0.0000E+00
  0
  0
  0
  0
  0
  0
Pathway 8:
  0
  0
  0
  0
  0
  1
  4
  0.0000E+00   5.4100E-01   0.0000E+00   0.0000E+00   0.0000E+00
  3.3300E-01   4.0000E-02   0.0000E+00   0.0000E+00   0.0000E+00
  2.4000E+01   2.0000E-02   0.0000E+00   0.0000E+00   0.0000E+00
  7.2000E+02   2.0000E-02   0.0000E+00   0.0000E+00   0.0000E+00
  0
  0
  0
  0
  0
  0
Pathway 9:
  0
  0
  0
  0
  0
  1
  3
  0.0000E+00   0.0000E+00   0.0000E+00   0.0000E+00   0.0000E+00
  2.5000E-01   2.6800E-01   1.0000E+02   0.0000E+00   0.0000E+00
  7.2000E+02   2.6800E-01   1.0000E+02   0.0000E+00   0.0000E+00
  0
  0
  0
  0
  0
  0
Pathway 10:
  0
  0
  0
  0
  0
  1
  3
  0.0000E+00   5.0000E+03   0.0000E+00   0.0000E+00   0.0000E+00
  3.3300E-01   5.0000E+03   9.8000E+01   9.8000E+01   9.8000E+01
  7.2000E+02   5.0000E+03   9.8000E+01   9.8000E+01   9.8000E+01
  0
  0
  0
  0
  0
```

```
  0
Pathway 11:
  0
  0
  0
  0
  0
  1
  2
  0.0000E+00   8.0000E+02   9.9000E+01   9.5000E+01   9.5000E+01
  7.2000E+02   8.0000E+02   9.9000E+01   9.5000E+01   9.5000E+01
  0
  0
  0
  0
  0
  0
Pathway 12:
  0
  0
  0
  0
  0
  1
  2
  0.0000E+00   8.5000E+02   1.0000E+02   1.0000E+02   1.0000E+02
  7.2000E+02   8.5000E+02   1.0000E+02   1.0000E+02   1.0000E+02
  0
  0
  0
  0
  0
  0
Dose Locations:
  3
Location 1:
CR
  5
  0
  1
  2
  0.0000E+00   3.5000E-04
  7.2000E+02   3.5000E-04
  1
  4
  0.0000E+00   1.0000E+00
  2.4000E+01   6.0000E-01
  9.6000E+01   4.0000E-01
  7.2000E+02   4.0000E-01
Location 2:
EAB
  6
  1
  2
  0.0000E+00   1.8100E-04
  7.2000E+02   1.8100E-04
  1
  4
  0.0000E+00   3.5000E-04
  8.0000E+00   3.5000E-04
  2.4000E+01   3.5000E-04
  7.2000E+02   3.5000E-04
  0
Location 3:
LPZ
  6
  1
  5
  0.0000E+00   4.9500E-05
  8.0000E+00   3.6900E-05
```

```
   2.4000E+01   1.9500E-05
   9.6000E+01   7.8100E-06
   7.2000E+02   7.8100E-06
   1
   4
   0.0000E+00   3.5000E-04
   8.0000E+00   1.8000E-04
   2.4000E+01   2.3000E-04
   7.2000E+02   2.3000E-04
   0
Effective Volume Location:
   1
   6
   0.0000E+00   8.8100E-04
   2.0000E+00   3.7500E-04
   8.0000E+00   1.9300E-04
   2.4000E+01   1.5000E-04
   9.6000E+01   1.4400E-04
   7.2000E+02   1.4400E-04
Simulation Parameters:
   6
   0.0000E+00   5.0000E-02
   4.0000E+00   5.0000E-01
   8.0000E+00   1.0000E+00
   2.4000E+01   2.0000E+00
   4.8000E+01   2.4000E+01
   7.2000E+02   0.0000E+00
Output Filename:
C:\Program Files\radtrad303\ENW\Columbia_lf.o0
   1
   1
   1
   1
   1
End of Scenario File
```

Columbia_1u.psf

```
 Radtrad 3.03 4/15/2001
 Columbia AST - Failed Line - Unfiltered
 Nuclide Inventory File:
 c:\program files\radtrad303\enw\columbia.nif
 Plant Power Level:
  3.5560E+03
 Compartments:
   7
 Compartment 1:
 DW
   3
  2.0050E+05
   1
   0
   0

   0
   0
 Compartment 2:
 WW
   3
  1.4420E+05
   0
   0
   0
   0
   0
 Compartment 3:
 RB
   3
  5.0000E+03
   0
   0
   0
   0
   0
 Compartment 4:
 SP
   3
  1.3730E+05
   0
   0
   0
   0
   0
 Compartment 5:
 CR
   1

  2.1400E+05
   0
   0
   0
   0
   0
 Compartment 6:
 Enviro
   2
  0.0000E+00
   0
   0
   0
   0
   0
 Compartment 7:
 Dummy
   3
  1.0000E+06
```

```
   0
   0
   0
   0
   0
Pathways:
 12
Pathway 1:
DW to WW
   1
   2
   2
Pathway 2:
WW to DW
   2
   1
   2
Pathway 3:
Failed SL to Enviro
   1
   6
   2
Pathway 4:
Intact SLs to Dummy
   1
   7
   2
Pathway 5:
DW to RB
   1
   3
   2
Pathway 6:
WW to RB
   2
   3
   2
Pathway 7:
Bypass DW to Dummy
   1
   7
   2
Pathway 8:
Bypass WW to Dummy
   2
   7
   2
Pathway 9:
SP to RB
   4
   3
   2
Pathway 10:
RB SGTS to Dummy
   3
   7
   2
Pathway 11:
Enviro to CR (unfiltered)
   6
   5
   2
Pathway 12:
CR to Enviro
   5
   6
   2
End of Plant Model File
Scenario Description Name:
```

```
Plant Model Filename:

Source Term:
  1
  1   1.0000E+00
c:\program files\radtrad303\defaults\fgr11&12.inp
c:\program files\radtrad303\enw\columbia.rft
  0.0000E+00
  1
  9.5000E-01   4.8500E-02   1.5000E-03   1.0000E+00
Overlying Pool:
  0
  0.0000E+00
  0
  0
  0
  0
Compartments:
  7
Compartment 1:
  0
  1
  1
  0.0000E+00
  5
  0.0000E+00   0.0000E+00
  2.5000E-01   6.2000E+00
  2.4400E+00   6.2000E-01
  2.4000E+01   0.0000E+00
  7.2000E+02   0.0000E+00
  1
  0.0000E+00
  5
  0.0000E+00   0.0000E+00
  2.5000E-01   6.2000E+00
  2.4400E+00   6.2000E-01
  2.4000E+01   0.0000E+00
  7.2000E+02   0.0000E+00
  1
  0.0000E+00
  0
  0
  0
  0
  0
Compartment 2:
  0
  1
  0
  0
  0
  0
  0
  0
  0
Compartment 3:
  0
  1
  0
  0
  0
  0
  0
  0
  0
Compartment 4:
  0
  1
  0
  0
```

```
   0
   0
   0
   0
   0
 Compartment 5:
   0
   1
   0
   0
   0
   0
   0
   0
   0
 Compartment 6:
   0
   1
   0
   0
   0
   0
   0
   0
   0
 Compartment 7:
   0
   1
   0
   0
   0
   0
   0
   0
   0
 Pathways:
  12
 Pathway 1:
   0
   0
   0
   0
   0
   1
   3
   0.0000E+00    0.0000E+00    0.0000E+00    0.0000E+00    0.0000E+00
   2.0333E+00    1.4420E+05    0.0000E+00    0.0000E+00    0.0000E+00
   7.2000E+02    1.4420E+05    0.0000E+00    0.0000E+00    0.0000E+00
   0
   0
   0
   0
   0
   0
 Pathway 2:
   0
   0
   0
   0
   0
   1
   3
   0.0000E+00    0.0000E+00    0.0000E+00    0.0000E+00    0.0000E+00
   2.0333E+00    1.4420E+05    0.0000E+00    0.0000E+00    0.0000E+00
   7.2000E+02    1.4420E+05    0.0000E+00    0.0000E+00    0.0000E+00
   0
   0
   0
   0
   0
```

```
  0
Pathway 3:
  0
  0
  0
  0
  0
  1
  3
  0.0000E+00   1.3800E-01   0.0000E+00   0.0000E+00   0.0000E+00
  2.4000E+01   6.9200E-02   0.0000E+00   0.0000E+00   0.0000E+00
  7.2000E+02   6.9200E-02   0.0000E+00   0.0000E+00   0.0000E+00
  0
  0
  0
  0
  0
  0
Pathway 4:
  0
  0
  0
  0
  0
  1
  3
  0.0000E+00   4.1500E-01   8.9700E+01   4.2800E+01   1.0000E-01
  2.4000E+01   2.0800E-01   8.9700E+01   4.2800E+01   1.0000E-01
  7.2000E+02   2.0800E-01   8.9700E+01   4.2800E+01   1.0000E-01
  0
  0
  0
  0
  0
  0
Pathway 5:
  0
  0
  0
  0
  0
  1
  4
  0.0000E+00   0.0000E+00   0.0000E+00   0.0000E+00   0.0000E+00
  3.3300E-01   6.9600E-01   0.0000E+00   0.0000E+00   0.0000E+00
  2.4000E+01   3.4800E-01   0.0000E+00   0.0000E+00   0.0000E+00
  7.2000E+02   3.4800E-01   0.0000E+00   0.0000E+00   0.0000E+00
  0
  0
  0
  0
  0
  0
Pathway 6:
  0
  0
  0
  0
  0
  1
  4
  0.0000E+00   0.0000E+00   0.0000E+00   0.0000E+00   0.0000E+00
  3.3300E-01   5.0000E-01   0.0000E+00   0.0000E+00   0.0000E+00
  2.4000E+01   2.5000E-01   0.0000E+00   0.0000E+00   0.0000E+00
  7.2000E+02   2.5000E-01   0.0000E+00   0.0000E+00   0.0000E+00
  0
  0
  0
  0
  0
```

```
  0
Pathway 7:
  0
  0
  0
  0
  0
  1
  4
  0.0000E+00   7.5200E-01   0.0000E+00   0.0000E+00   0.0000E+00
  3.3300E-01   5.6000E-02   0.0000E+00   0.0000E+00   0.0000E+00
  2.4000E+01   2.8000E-02   0.0000E+00   0.0000E+00   0.0000E+00
  7.2000E+02   2.8000E-02   0.0000E+00   0.0000E+00   0.0000E+00
  0
  0
  0
  0
  0
  0
Pathway 8:
  0
  0
  0
  0
  0
  1
  4
  0.0000E+00   5.4100E-01   0.0000E+00   0.0000E+00   0.0000E+00
  3.3300E-01   4.0000E-02   0.0000E+00   0.0000E+00   0.0000E+00
  2.4000E+01   2.0000E-02   0.0000E+00   0.0000E+00   0.0000E+00
  7.2000E+02   2.0000E-02   0.0000E+00   0.0000E+00   0.0000E+00
  0
  0
  0
  0
  0
  0
Pathway 9:
  0
  0
  0
  0
  0
  1
  3
  0.0000E+00   0.0000E+00   0.0000E+00   0.0000E+00   0.0000E+00
  2.5000E-01   2.6800E-01   1.0000E+02   0.0000E+00   0.0000E+00
  7.2000E+02   2.6800E-01   1.0000E+02   0.0000E+00   0.0000E+00
  0
  0
  0
  0
  0
  0
Pathway 10:
  0
  0
  0
  0
  0
  1
  3
  0.0000E+00   5.0000E+03   0.0000E+00   0.0000E+00   0.0000E+00
  3.3300E-01   5.0000E+03   9.8000E+01   9.8000E+01   9.8000E+01
  7.2000E+02   5.0000E+03   9.8000E+01   9.8000E+01   9.8000E+01
  0
  0
  0
  0
  0
```

```
  0
Pathway 11:
  0
  0
  0
  0
  0
  1
  2
  0.0000E+00   5.0000E+01   0.0000E+00   0.0000E+00   0.0000E+00
  7.2000E+02   5.0000E+01   0.0000E+00   0.0000E+00   0.0000E+00
  0
  0
  0
  0
  0
  0
Pathway 12:
  0
  0
  0
  0
  0
  1
  2
  0.0000E+00   8.5000E+02   1.0000E+02   1.0000E+02   1.0000E+02
  7.2000E+02   8.5000E+02   1.0000E+02   1.0000E+02   1.0000E+02
  0
  0
  0
  0
  0
  0
Dose Locations:
  3
Location 1:
CR
  5
  0
  1
  2
  0.0000E+00   3.5000E-04
  7.2000E+02   3.5000E-04
  1
  4
  0.0000E+00   1.0000E+00
  2.4000E+01   6.0000E-01
  9.6000E+01   4.0000E-01
  7.2000E+02   4.0000E-01
Location 2:
EAB
  6
  1
  2
  0.0000E+00   1.8100E-04
  7.2000E+02   1.8100E-04
  1
  4
  0.0000E+00   3.5000E-04
  8.0000E+00   3.5000E-04
  2.4000E+01   3.5000E-04
  7.2000E+02   3.5000E-04
  0
Location 3:
LPZ
  6
  1
  5
  0.0000E+00   4.9500E-05
  8.0000E+00   3.6900E-05
```

```
   2.4000E+01   1.9500E-05
   9.6000E+01   7.8100E-06
   7.2000E+02   7.8100E-06
   1
   4
   0.0000E+00   3.5000E-04
   8.0000E+00   1.8000E-04
   2.4000E+01   2.3000E-04
   7.2000E+02   2.3000E-04
   0
 Effective Volume Location:
   1
   6
   0.0000E+00   4.7000E-03
   2.0000E+00   2.0000E-03
   8.0000E+00   1.0300E-03
   2.4000E+01   8.0100E-04
   9.6000E+01   7.6900E-04
   7.2000E+02   7.6900E-04
 Simulation Parameters:
   6
   0.0000E+00   5.0000E-02
   4.0000E+00   5.0000E-01
   8.0000E+00   1.0000E+00
   2.4000E+01   2.0000E+00
   4.8000E+01   2.4000E+01
   7.2000E+02   0.0000E+00
 Output Filename:
 C:\Program Files\radtrad303\ENW\Columbia_1u.o0
   1
   1
   1
   1
   1
 End of Scenario File
```

Columbia_2f.psf

```
 Radtrad 3.03 4/15/2001
 Columbia AST - Intact Lines - Filtered
 Nuclide Inventory File:
 c:\Program Files\radtrad303\ENW\columbia.nif
 Plant Power Level:
  3.5560E+03
 Compartments:
   7
 Compartment 1:
 DW
    3
  2.0050E+05
    1
    0
    0
    0
    0
 Compartment 2:
 WW
    3
  1.4420E+05
    0
    0
    0
    0
    0
 Compartment 3:
 RB
    3
  5.0000E+03
    0
    0
    0
    0
    0
 Compartment 4:
 SP
    3
  1.3730E+05
    0
    0
    0
    0
    0
 Compartment 5:
 CR
    1
  2.1400E+05
    0
    0
    0
    0
    0
 Compartment 6:
 Enviro
    2
  0.0000E+00
    0
    0
    0
    0
    0
 Compartment 7:
 Dummy
    3
  1.0000E+06
    0
    0
```

```
  0
  0
  0
Pathways:
 12
Pathway 1:
DW to WW
  1
  2
  2
Pathway 2:
WW to DW
  2
  1
  2
Pathway 3:
Failed SL to Dummy
  1
  7
  2
Pathway 4:
Intact SLs to Enviro
  1
  6
  2
Pathway 5:
DW to RB
  1
  3
  2
Pathway 6:
WW to RB
  2
  3
  2
Pathway 7:
Bypass DW to Dummy
  1
  7
  2
Pathway 8:
Bypass WW to Dummy
  2
  7
  2
Pathway 9:
SP to RB
  4
  3
  2
Pathway 10:
RB SGTS to Dummy
  3
  7
  2
Pathway 11:
Enviro to CR (filtered)
  6
  5
  2
Pathway 12:
CR to Enviro
  5
  6
  2
End of Plant Model File
Scenario Description Name:

Plant Model Filename:
```

```
Source Term:
  1
  1   1.0000E+00
c:\Program Files\radtrad303\defaults\fgr11&12.inp
c:\Program Files\radtrad303\ENW\columbia.rft
  0.0000E+00
  1
  9.5000E-01   4.8500E-02   1.5000E-03   1.0000E+00
Overlying Pool:
  0
  0.0000E+00
  0
  0
  0
  0
Compartments:
  7
Compartment 1:
  0
  1
  1
  0.0000E+00
  5
  0.0000E+00   0.0000E+00
  2.5000E-01   6.2000E+00
  2.4400E+00   6.2000E-01
  2.4000E+01   0.0000E+00
  7.2000E+02   0.0000E+00
  1
  0.0000E+00
  5
  0.0000E+00   0.0000E+00
  2.5000E-01   6.2000E+00
  2.4400E+00   6.2000E-01
  2.4000E+01   0.0000E+00
  7.2000E+02   0.0000E+00
  1
  0.0000E+00
  0
  0
  0
  0
  0
Compartment 2:
  0
  1
  0
  0
  0
  0
  0
  0
  0
Compartment 3:
  0
  1
  0
  0
  0
  0
  0
  0
  0
Compartment 4:
  0
  1
  0
  0
  0
  0
```

```
  0
  0
  0
Compartment 5:
  0
  1
  0
  0
  0
  0
  0
  0
  0
  0
Compartment 6:
  0
  1
  0
  0
  0
  0
  0
  0
  0
  0
Compartment 7:
  0
  1
  0
  0
  0
  0
  0
  0
  0
Pathways:
 12
Pathway 1:
  0
  0
  0
  0
  0
  1
  3
  0.0000E+00   0.0000E+00   0.0000E+00   0.0000E+00   0.0000E+00
  2.0333E+00   1.4420E+05   0.0000E+00   0.0000E+00   0.0000E+00
  7.2000E+02   1.4420E+05   0.0000E+00   0.0000E+00   0.0000E+00
  0
  0
  0

  0
  0
  0
Pathway 2:
  0
  0
  0
  0
  0
  1
  3
  0.0000E+00   0.0000E+00   0.0000E+00   0.0000E+00   0.0000E+00
  2.0333E+00   1.4420E+05   0.0000E+00   0.0000E+00   0.0000E+00
  7.2000E+02   1.4420E+05   0.0000E+00   0.0000E+00   0.0000E+00
  0
  0
  0
  0
  0
  0
```

```
Pathway 3:
  0
  0
  0
  0
  0
  1
  3
  0.0000E+00   1.3800E-01   0.0000E+00   0.0000E+00   0.0000E+00
  2.4000E+01   6.9200E-02   0.0000E+00   0.0000E+00   0.0000E+00
  7.2000E+02   6.9200E-02   0.0000E+00   0.0000E+00   0.0000E+00
  0
  0
  0
  0
  0
  0
Pathway 4:
  0
  0
  0
  0
  0
  1
  3
  0.0000E+00   4.1500E-01   8.9700E+01   4.2800E+01   1.0000E-01
  2.4000E+01   2.0800E-01   8.9700E+01   4.2800E+01   1.0000E-01
  7.2000E+02   2.0800E-01   8.9700E+01   4.2800E+01   1.0000E-01
  0
  0
  0
  0
  0
  0
Pathway 5:
  0
  0
  0
  0
  0
  1
  4
  0.0000E+00   0.0000E+00   0.0000E+00   0.0000E+00   0.0000E+00
  3.3300E-01   6.9600E-01   0.0000E+00   0.0000E+00   0.0000E+00
  2.4000E+01   3.4800E-01   0.0000E+00   0.0000E+00   0.0000E+00
  7.2000E+02   3.4800E-01   0.0000E+00   0.0000E+00   0.0000E+00
  0
  0
  0
  0
  0
  0
Pathway 6:
  0
  0
  0
  0
  0
  1
  4
  0.0000E+00   0.0000E+00   0.0000E+00   0.0000E+00   0.0000E+00
  3.3300E-01   5.0000E-01   0.0000E+00   0.0000E+00   0.0000E+00
  2.4000E+01   2.5000E-01   0.0000E+00   0.0000E+00   0.0000E+00
  7.2000E+02   2.5000E-01   0.0000E+00   0.0000E+00   0.0000E+00
  0
  0
  0
  0
  0
  0
```

```
Pathway 7:
  0
  0
  0
  0
  0
  1
  4
  0.0000E+00   7.5200E-01   0.0000E+00   0.0000E+00   0.0000E+00
  3.3300E-01   5.6000E-02   0.0000E+00   0.0000E+00   0.0000E+00
  2.4000E+01   2.8000E-02   0.0000E+00   0.0000E+00   0.0000E+00
  7.2000E+02   2.8000E-02   0.0000E+00   0.0000E+00   0.0000E+00
  0
  0
  0
  0
  0
  0
Pathway 8:
  0
  0
  0
  0
  0
  1
  4
  0.0000E+00   5.4100E-01   0.0000E+00   0.0000E+00   0.0000E+00
  3.3300E-01   4.0000E-02   0.0000E+00   0.0000E+00   0.0000E+00
  2.4000E+01   2.0000E-02   0.0000E+00   0.0000E+00   0.0000E+00
  7.2000E+02   2.0000E-02   0.0000E+00   0.0000E+00   0.0000E+00
  0
  0
  0
  0
  0
  0
Pathway 9:
  0
  0
  0
  0
  0
  1
  3
  0.0000E+00   0.0000E+00   0.0000E+00   0.0000E+00   0.0000E+00
  2.5000E-01   2.6800E-01   1.0000E+02   0.0000E+00   0.0000E+00
  7.2000E+02   2.6800E-01   1.0000E+02   0.0000E+00   0.0000E+00
  0
  0
  0
  0
  0
  0
Pathway 10:
  0
  0
  0
  0
  0
  1
  3
  0.0000E+00   5.0000E+03   0.0000E+00   0.0000E+00   0.0000E+00
  3.3300E-01   5.0000E+03   9.8000E+01   9.8000E+01   9.8000E+01
  7.2000E+02   5.0000E+03   9.8000E+01   9.8000E+01   9.8000E+01
  0
  0
  0
  0
  0
  0
```

```
Pathway 11:
  0
  0
  0
  0
  0
  1
  2
  0.0000E+00   8.0000E+02   9.9000E+01   9.5000E+01   9.5000E+01
  7.2000E+02   8.0000E+02   9.9000E+01   9.5000E+01   9.5000E+01
  0
  0
  0
  0
  0
  0
Pathway 12:
  0
  0
  0
  0
  0
  1
  2
  0.0000E+00   8.5000E+02   1.0000E+02   1.0000E+02   1.0000E+02
  7.2000E+02   8.5000E+02   1.0000E+02   1.0000E+02   1.0000E+02
  0
  0
  0
  0
  0
  0
Dose Locations:
  3
Location 1:
CR
  5
  0
  1
  2
  0.0000E+00   3.5000E-04
  7.2000E+02   3.5000E-04
  1
  4
  0.0000E+00   1.0000E+00
  2.4000E+01   6.0000E-01
  9.6000E+01   4.0000E-01
  7.2000E+02   4.0000E-01
Location 2:
EAB
  6
  1
  2
  0.0000E+00   1.8100E-04
  7.2000E+02   1.8100E-04
  1
  4
  0.0000E+00   3.5000E-04
  8.0000E+00   3.5000E-04
  2.4000E+01   3.5000E-04
  7.2000E+02   3.5000E-04
  0
Location 3:
LPZ
  6
  1
  5
  0.0000E+00   4.9500E-05
  8.0000E+00   3.6900E-05
  2.4000E+01   1.9500E-05
```

```
   9.6000E+01   7.8100E-06
   7.2000E+02   7.8100E-06
   1
   4
   0.0000E+00   3.5000E-04
   8.0000E+00   1.8000E-04
   2.4000E+01   2.3000E-04
   7.2000E+02   2.3000E-04
   0
Effective Volume Location:
   1
   6
   0.0000E+00   8.8100E-04
   2.0000E+00   3.7500E-04
   8.0000E+00   1.9300E-04
   2.4000E+01   1.5000E-04
   9.6000E+01   1.4400E-04
   7.2000E+02   1.4400E-04
Simulation Parameters:
   6
   0.0000E+00   5.0000E-02
   4.0000E+00   5.0000E-01
   8.0000E+00   1.0000E+00
   2.4000E+01   2.0000E+00
   4.8000E+01   2.4000E+01
   7.2000E+02   0.0000E+00
Output Filename:
C:\Program Files\radtrad303\ENW\Columbia _2f.o0
   1
   1
   1
   1
   1
End of Scenario File
```

Columbia_2u.psf

```
Radtrad 3.03 4/15/2001
Columbia AST - Intact Lines - Unfiltered
Nuclide Inventory File:
c:\program files\radtrad303\enw\columbia.nif
Plant Power Level:
 3.5560E+03
Compartments:
  7
Compartment 1:
DW
  3
 2.0050E+05
  1
  0
  0
  0
  0
Compartment 2:
WW
  3
 1.4420E+05
  0
  0
  0
  0
  0
Compartment 3:
RB
  3
 5.0000E+03
  0
  0
  0
  0
  0
Compartment 4:
SP
  3
 1.3730E+05
  0
  0
  0
  0
  0
Compartment 5:
CR
  1
 2.1400E+05
  0
  0
  0
  0
  0
Compartment 6:
Enviro
  2
 0.0000E+00
  0
  0
  0
  0
  0
Compartment 7:
Dummy
  3
 1.0000E+06
  0
  0
```

```
  0
  0
  0
Pathways:
 12
Pathway 1:
DW to WW
  1
  2
  2

Pathway 2:
WW to DW
  2
  1
  2
Pathway 3:
Failed SL to Dummy
  1
  7
  2
Pathway 4:
Intact SLs to Enviro
  1
  6
  2
Pathway 5:
DW to RB
  1
  3
  2
Pathway 6:
WW to RB
  2
  3
  2
Pathway 7:
Bypass DW to Dummy
  1
  7
  2
Pathway 8:
Bypass WW to Dummy
  2
  7
  2
Pathway 9:
SP to RB
  4
  3
  2
Pathway 10:
RB SGTS to Dummy
  3
  7
  2
Pathway 11:
Enviro to CR (unfiltered)
  6
  5
  2
Pathway 12:
CR to Enviro
  5
  6
  2
End of Plant Model File
Scenario Description Name:

Plant Model Filename:
```

```
Source Term:
  1
  1   1.0000E+00
c:\program files\radtrad303\defaults\fgr11&12.inp
c:\program files\radtrad303\enw\columbia.rft
  0.0000E+00
  1
  9.5000E-01   4.8500E-02   1.5000E-03   1.0000E+00
Overlying Pool:
  0
  0.0000E+00
  0
  0
  0
  0
Compartments:
  7
Compartment 1:
  0
  1
  1
  0.0000E+00
  5
  0.0000E+00   0.0000E+00
  2.5000E-01   6.2000E+00
  2.4400E+00   6.2000E-01
  2.4000E+01   0.0000E+00
  7.2000E+02   0.0000E+00
  1
  0.0000E+00
  5
  0.0000E+00   0.0000E+00
  2.5000E-01   6.2000E+00
  2.4400E+00   6.2000E-01
  2.4000E+01   0.0000E+00
  7.2000E+02   0.0000E+00
  1
  0.0000E+00
  0
  0
  0
  0
  0
Compartment 2:
  0
  1
  0
  0
  0
  0
  0
  0
  0
Compartment 3:
  0
  1
  0
  0
  0
  0
  0
  0
  0
Compartment 4:
  0
  1
  0
  0
  0
```

```
  0
  0
  0
  0
Compartment 5:
  0
  1
  0
  0
  0
  0
  0
  0
  0
Compartment 6:
  0
  1
  0
  0
  0
  0
  0
  0
  0
Compartment 7:
  0
  1
  0
  0
  0
  0
  0
  0
  0
Pathways:
 12
Pathway 1:
  0
  0
  0
  0
  0
  1
  3
  0.0000E+00   0.0000E+00   0.0000E+00   0.0000E+00   0.0000E+00
  2.0333E+00   1.4420E+05   0.0000E+00   0.0000E+00   0.0000E+00
  7.2000E+02   1.4420E+05   0.0000E+00   0.0000E+00   0.0000E+00
  0
  0
  0
  0
  0
  0
Pathway 2:
  0
  0
  0
  0
  0
  1
  3
  0.0000E+00   0.0000E+00   0.0000E+00   0.0000E+00   0.0000E+00
  2.0333E+00   1.4420E+05   0.0000E+00   0.0000E+00   0.0000E+00
  7.2000E+02   1.4420E+05   0.0000E+00   0.0000E+00   0.0000E+00
  0
  0
  0
  0
  0
  0
```

```
Pathway 3:
  0
  0
  0
  0
  0
  1
  3
  0.0000E+00   1.3800E-01   0.0000E+00   0.0000E+00   0.0000E+00
  2.4000E+01   6.9200E-02   0.0000E+00   0.0000E+00   0.0000E+00
  7.2000E+02   6.9200E-02   0.0000E+00   0.0000E+00   0.0000E+00
  0
  0
  0
  0
  0
  0
Pathway 4:
  0
  0
  0
  0
  0
  1
  3
  0.0000E+00   4.1500E-01   8.9700E+01   4.2800E+01   1.0000E-01
  2.4000E+01   2.0800E-01   8.9700E+01   4.2800E+01   1.0000E-01
  7.2000E+02   2.0800E-01   8.9700E+01   4.2800E+01   1.0000E-01
  0
  0
  0
  0
  0
  0
Pathway 5:
  0
  0
  0
  0
  0
  1
  4
  0.0000E+00   0.0000E+00   0.0000E+00   0.0000E+00   0.0000E+00
  3.3300E-01   6.9600E-01   0.0000E+00   0.0000E+00   0.0000E+00
  2.4000E+01   3.4800E-01   0.0000E+00   0.0000E+00   0.0000E+00
  7.2000E+02   3.4800E-01   0.0000E+00   0.0000E+00   0.0000E+00
  0
  0
  0
  0
  0
  0
Pathway 6:
  0
  0
  0
  0
  0
  1
  4
  0.0000E+00   0.0000E+00   0.0000E+00   0.0000E+00   0.0000E+00
  3.3300E-01   5.0000E-01   0.0000E+00   0.0000E+00   0.0000E+00
  2.4000E+01   2.5000E-01   0.0000E+00   0.0000E+00   0.0000E+00
  7.2000E+02   2.5000E-01   0.0000E+00   0.0000E+00   0.0000E+00
  0
  0
  0
  0
  0
  0
```

```
Pathway 7:
  0
  0
  0
  0
  0
  1
  4
  0.0000E+00   7.5200E-01   0.0000E+00   0.0000E+00   0.0000E+00
  3.3300E-01   5.6000E-02   0.0000E+00   0.0000E+00   0.0000E+00
  2.4000E+01   2.8000E-02   0.0000E+00   0.0000E+00   0.0000E+00
  7.2000E+02   2.8000E-02   0.0000E+00   0.0000E+00   0.0000E+00
  0
  0
  0
  0
  0
  0
Pathway 8:
  0
  0
  0
  0
  0
  1
  4
  0.0000E+00   5.4100E-01   0.0000E+00   0.0000E+00   0.0000E+00
  3.3300E-01   4.0000E-02   0.0000E+00   0.0000E+00   0.0000E+00
  2.4000E+01   2.0000E-02   0.0000E+00   0.0000E+00   0.0000E+00
  7.2000E+02   2.0000E-02   0.0000E+00   0.0000E+00   0.0000E+00
  0

  0
  0
  0
  0
  0
Pathway 9:
  0
  0
  0
  0
  0
  1
  3
  0.0000E+00   0.0000E+00   0.0000E+00   0.0000E+00   0.0000E+00
  2.5000E-01   2.6800E-01   1.0000E+02   0.0000E+00   0.0000E+00
  7.2000E+02   2.6800E-01   1.0000E+02   0.0000E+00   0.0000E+00
  0
  0
  0
  0
  0
  0
Pathway 10:
  0
  0
  0
  0
  0
  1
  3
  0.0000E+00   5.0000E+03   0.0000E+00   0.0000E+00   0.0000E+00
  3.3300E-01   5.0000E+03   9.8000E+01   9.8000E+01   9.8000E+01

  7.2000E+02   5.0000E+03   9.8000E+01   9.8000E+01   9.8000E+01
  0
  0
  0
  0
```

```
  0
  0
Pathway 11:
  0
  0
  0
  0
  0
  1
  2
  0.0000E+00   5.0000E+01   0.0000E+00   0.0000E+00   0.0000E+00
  7.2000E+02   5.0000E+01   0.0000E+00   0.0000E+00   0.0000E+00
  0
  0
  0
  0
  0
  0
Pathway 12:
  0
  0
  0
  0
  0
  1
  2
  0.0000E+00   8.5000E+02   1.0000E+02   1.0000E+02   1.0000E+02
  7.2000E+02   8.5000E+02   1.0000E+02   1.0000E+02   1.0000E+02
  0
  0
  0
  0
  0
  0
Dose Locations:
  3
Location 1:
CR
  5
  0
  1
  2
  0.0000E+00   3.5000E-04
  7.2000E+02   3.5000E-04
  1
  4
  0.0000E+00   1.0000E+00
  2.4000E+01   6.0000E-01
  9.6000E+01   4.0000E-01
  7.2000E+02   4.0000E-01
Location 2:
EAB
  6
  1
  2
  0.0000E+00   1.8100E-04
  7.2000E+02   1.8100E-04
  1
  4
  0.0000E+00   3.5000E-04
  8.0000E+00   3.5000E-04
  2.4000E+01   3.5000E-04
  7.2000E+02   3.5000E-04
  0
Location 3:
LPZ
  6
  1
  5
  0.0000E+00   4.9500E-05
```

```
   8.0000E+00   3.6900E-05
   2.4000E+01   1.9500E-05
   9.6000E+01   7.8100E-06
   7.2000E+02   7.8100E-06
   1
   4
   0.0000E+00   3.5000E-04
   8.0000E+00   1.8000E-04
   2.4000E+01   2.3000E-04
   7.2000E+02   2.3000E-04
   0
Effective Volume Location:
   1
   6
   0.0000E+00   4.7000E-03
   2.0000E+00   2.0000E-03
   8.0000E+00   1.0300E-03
   2.4000E+01   8.0100E-04
   9.6000E+01   7.6900E-04
   7.2000E+02   7.6900E-04
Simulation Parameters:
   6
   0.0000E+00   5.0000E-02
   4.0000E+00   5.0000E-01
   8.0000E+00   1.0000E+00
   2.4000E+01   2.0000E+00
   4.8000E+01   2.4000E+01
   7.2000E+02   0.0000E+00
Output Filename:
C:\Program Files\radtrad303\ENW\Columbia_2u.o0
   1
   1
   1
   1
   1
End of Scenario File
```

Columbia_3f.psf

```
Radtrad 3.03 4/15/2001
Columbia AST - Bypass - Filtered
Nuclide Inventory File:
c:\program files\radtrad303\enw\columbia.nif
Plant Power Level:
 3.5560E+03
Compartments:
  7
Compartment 1:
DW
  3
 2.0050E+05
  1
  0
  0
  0
  0
Compartment 2:
WW
  3
 1.4420E+05
  0
  0
  0
  0
  0
Compartment 3:
RB
  3
 5.0000E+03
  0
  0
  0
  0
  0
Compartment 4:
SP
  3
 1.3730E+05
  0
  0
  0
  0
  0
Compartment 5:
CR
  1
 2.1400E+05
  0
  0
  0
  0
  0
Compartment 6:
Enviro
  2
 0.0000E+00
  0
  0
  0
  0
  0
Compartment 7:
Dummy
  3
 1.0000E+06
  0
  0
```

```
  0
  0
  0
Pathways:
 12
Pathway 1:
DW to WW
  1
  2
  2
Pathway 2:
WW to DW
  2
  1
  2
Pathway 3:
Failed SL to Dummy
  1
  7
  2
Pathway 4:
Intact SLs to Dummy
  1
  7
  2
Pathway 5:
DW to RB
  1
  3
  2
Pathway 6:
WW to RB
  2
  3
  2
Pathway 7:
Bypass DW to Enviro
  1
  6
  2
Pathway 8:
Bypass WW to Enviro
  2
  6
  2
Pathway 9:
SP to RB
  4
  3
  2
Pathway 10:
RB SGTS to Dummy
  3
  7
  2
Pathway 11:
Enviro to CR (filtered)
  6
  5
  2
Pathway 12:
CR to Enviro
  5
  6
  2
End of Plant Model File
Scenario Description Name:

Plant Model Filename:
```

```
Source Term:
  1
  1   1.0000E+00
c:\program files\radtrad303\defaults\fgr11&12.inp
c:\program files\radtrad303\enw\columbia.rft
  0.0000E+00
  1
  9.5000E-01   4.8500E-02   1.5000E-03   1.0000E+00
Overlying Pool:
  0
  0.0000E+00
  0
  0
  0
  0
Compartments:
  7
Compartment 1:
  0
  1
  1
  0.0000E+00
  5
  0.0000E+00   0.0000E+00
  2.5000E-01   6.2000E+00
  2.4400E+00   6.2000E-01
  2.4000E+01   0.0000E+00
  7.2000E+02   0.0000E+00
  1
  0.0000E+00
  5
  0.0000E+00   0.0000E+00
  2.5000E-01   6.2000E+00
  2.4400E+00   6.2000E-01
  2.4000E+01   0.0000E+00
  7.2000E+02   0.0000E+00
  1

  0.0000E+00
  0
  0
  0
  0
  0
Compartment 2:
  0
  1
  0
  0
  0
  0
  0
  0
  0
Compartment 3:
  0
  1
  0
  0
  0
  0
  0
  0
  0
Compartment 4:
  0
  1
  0
  0
  0
```

```
  0
  0
  0
  0
Compartment 5:
  0
  1
  0
  0
  0
  0
  0
  0
  0
Compartment 6:
  0
  1
  0
  0
  0
  0
  0
  0
  0
Compartment 7:
  0
  1
  0
  0
  0
  0
  0
  0
  0
Pathways:
 12
Pathway 1:
  0
  0
  0
  0
  0
  1
  3
  0.0000E+00   0.0000E+00   0.0000E+00   0.0000E+00   0.0000E+00
  2.0333E+00   1.4420E+05   0.0000E+00   0.0000E+00   0.0000E+00
  7.2000E+02   1.4420E+05   0.0000E+00   0.0000E+00   0.0000E+00
  0
  0
  0
  0
  0
  0
Pathway 2:
  0
  0
  0
  0
  0
  1
  3
  0.0000E+00   0.0000E+00   0.0000E+00   0.0000E+00   0.0000E+00
  2.0333E+00   1.4420E+05   0.0000E+00   0.0000E+00   0.0000E+00
  7.2000E+02   1.4420E+05   0.0000E+00   0.0000E+00   0.0000E+00
  0
  0
  0
  0
  0
  0
```

```
Pathway 3:
  0
  0
  0
  0
  0
  1
  3
  0.0000E+00   1.3800E-01   0.0000E+00   0.0000E+00   0.0000E+00
  2.4000E+01   6.9200E-02   0.0000E+00   0.0000E+00   0.0000E+00
  7.2000E+02   6.9200E-02   0.0000E+00   0.0000E+00   0.0000E+00
  0
  0
  0
  0
  0
  0
Pathway 4:
  0
  0
  0
  0
  0
  1
  3
  0.0000E+00   4.1500E-01   8.9700E+01   4.2800E+01   1.0000E-01
  2.4000E+01   2.0800E-01   8.9700E+01   4.2800E+01   1.0000E-01
  7.2000E+02   2.0800E-01   8.9700E+01   4.2800E+01   1.0000E-01
  0
  0
  0
  0
  0
  0
Pathway 5:
  0
  0
  0
  0
  0
  1
  4
  0.0000E+00   0.0000E+00   0.0000E+00   0.0000E+00   0.0000E+00
  3.3300E-01   6.9600E-01   0.0000E+00   0.0000E+00   0.0000E+00
  2.4000E+01   3.4800E-01   0.0000E+00   0.0000E+00   0.0000E+00
  7.2000E+02   3.4800E-01   0.0000E+00   0.0000E+00   0.0000E+00
  0
  0
  0
  0
  0
  0
Pathway 6:
  0
  0
  0
  0
  0
  1
  4
  0.0000E+00   0.0000E+00   0.0000E+00   0.0000E+00   0.0000E+00
  3.3300E-01   5.0000E-01   0.0000E+00   0.0000E+00   0.0000E+00
  2.4000E+01   2.5000E-01   0.0000E+00   0.0000E+00   0.0000E+00
  7.2000E+02   2.5000E-01   0.0000E+00   0.0000E+00   0.0000E+00
  0
  0
  0
  0
  0
  0
```

```
Pathway 7:
  0
  0
  0
  0
  0
  1
  4
  0.0000E+00   7.5200E-01   0.0000E+00   0.0000E+00   0.0000E+00
  3.3300E-01   5.6000E-02   0.0000E+00   0.0000E+00   0.0000E+00
  2.4000E+01   2.8000E-02   0.0000E+00   0.0000E+00   0.0000E+00
  7.2000E+02   2.8000E-02   0.0000E+00   0.0000E+00   0.0000E+00
  0
  0
  0
  0
  0
  0
Pathway 8:
  0
  0
  0
  0
  0
  1
  4
  0.0000E+00   5.4100E-01   0.0000E+00   0.0000E+00   0.0000E+00
  3.3300E-01   4.0000E-02   0.0000E+00   0.0000E+00   0.0000E+00
  2.4000E+01   2.0000E-02   0.0000E+00   0.0000E+00   0.0000E+00
  7.2000E+02   2.0000E-02   0.0000E+00   0.0000E+00   0.0000E+00
  0
  0
  0
  0
  0
  0
Pathway 9:
  0
  0
  0
  0
  0
  1
  3
  0.0000E+00   0.0000E+00   0.0000E+00   0.0000E+00   0.0000E+00
  2.5000E-01   2.6800E-01   1.0000E+02   0.0000E+00   0.0000E+00
  7.2000E+02   2.6800E-01   1.0000E+02   0.0000E+00   0.0000E+00
  0
  0
  0
  0
  0
  0
Pathway 10:
  0
  0
  0
  0
  0
  1
  3
  0.0000E+00   5.0000E+03   0.0000E+00   0.0000E+00   0.0000E+00
  3.3300E-01   5.0000E+03   9.8000E+01   9.8000E+01   9.8000E+01
  7.2000E+02   5.0000E+03   9.8000E+01   9.8000E+01   9.8000E+01
  0
  0
  0
  0
  0
  0
```

```
Pathway 11:
  0
  0
  0
  0
  0
  1
  2
  0.0000E+00   8.0000E+02   9.9000E+01   9.5000E+01   9.5000E+01
  7.2000E+02   8.0000E+02   9.9000E+01   9.5000E+01   9.5000E+01
  0
  0
  0
  0
  0
  0
Pathway 12:
  0
  0
  0
  0
  0
  1
  2
  0.0000E+00   8.5000E+02   1.0000E+02   1.0000E+02   1.0000E+02
  7.2000E+02   8.5000E+02   1.0000E+02   1.0000E+02   1.0000E+02
  0
  0
  0
  0
  0
  0
Dose Locations:
  3
Location 1:
CR
  5
  0
  1
  2
  0.0000E+00   3.5000E-04
  7.2000E+02   3.5000E-04
  1
  4
  0.0000E+00   1.0000E+00
  2.4000E+01   6.0000E-01
  9.6000E+01   4.0000E-01
  7.2000E+02   4.0000E-01
Location 2:
EAB
  6
  1
  2
  0.0000E+00   1.8100E-04
  7.2000E+02   1.8100E-04
  1
  4
  0.0000E+00   3.5000E-04
  8.0000E+00   3.5000E-04
  2.4000E+01   3.5000E-04
  7.2000E+02   3.5000E-04
  0
Location 3:
LPZ
  6
  1
  5
  0.0000E+00   4.9500E-05
  8.0000E+00   3.6900E-05
  2.4000E+01   1.9500E-05
```

```
   9.6000E+01   7.8100E-06
   7.2000E+02   7.8100E-06
   1
   4
   0.0000E+00   3.5000E-04
   8.0000E+00   1.8000E-04
   2.4000E+01   2.3000E-04
   7.2000E+02   2.3000E-04
   0
Effective Volume Location:
   1
   6
   0.0000E+00   2.8200E-04
   2.0000E+00   2.1700E-04
   8.0000E+00   8.7700E-05
   2.4000E+01   7.4200E-05
   9.6000E+01   6.4000E-05
   7.2000E+02   6.4000E-05
Simulation Parameters:
   6
   0.0000E+00   5.0000E-02
   4.0000E+00   5.0000E-01
   8.0000E+00   1.0000E+00
   2.4000E+01   2.0000E+00
   4.8000E+01   2.4000E+01
   7.2000E+02   0.0000E+00
Output Filename:
C:\Program Files\radtrad303\ENW\Columbia_3f.o0
   1
   1
   1
   1
   1
End of Scenario File
```

Columbia_3u.psf

```
Radtrad 3.03 4/15/2001
Columbia AST - Bypass - Unfiltered
Nuclide Inventory File:
c:\Program Files\radtrad303\ENW\columbia.nif
Plant Power Level:
 3.5560E+03
Compartments:
  7
Compartment 1:
DW
  3
 2.0050E+05
  1
  0
  0
  0
  0
Compartment 2:
WW
  3
 1.4420E+05
  0
  0
  0
  0
  0
Compartment 3:
RB
  3
 5.0000E+03
  0
  0
  0
  0
  0
Compartment 4:
SP
  3
 1.3730E+05
  0
  0
  0
  0
  0
Compartment 5:
CR
  1
 2.1400E+05
  0
  0
  0
  0
  0
Compartment 6:
Enviro
  2
 0.0000E+00
  0
  0
  0
  0
  0
Compartment 7:
Dummy
  3
 1.0000E+06
  0
  0
```

```
  0
  0
  0
Pathways:
 12
Pathway 1:
DW to WW
  1
  2
  2
Pathway 2:
WW to DW
  2
  1
  2
Pathway 3:
Failed SL to Dummy
  1
  7
  2
Pathway 4:
Intact SLs to Dummy
  1
  7
  2
Pathway 5:
DW to RB
  1
  3
  2
Pathway 6:
WW to RB
  2
  3
  2
Pathway 7:
Bypass DW to Enviro
  1
  6
  2
Pathway 8:
Bypass WW to Enviro
  2
  6
  2
Pathway 9:
SP to RB
  4
  3
  2
Pathway 10:
RB SGTS to Dummy
  3
  7
  2
Pathway 11:
Enviro to CR (unfiltered)
  6
  5
  2
Pathway 12:
CR to Enviro
  5
  6
  2
End of Plant Model File
Scenario Description Name:

Plant Model Filename:
```

```
Source Term:
  1
  1   1.0000E+00
c:\Program Files\radtrad303\defaults\fgr11&12.inp
c:\Program Files\radtrad303\ENW\columbia.rft
  0.0000E+00
  1
  9.5000E-01   4.8500E-02   1.5000E-03   1.0000E+00
Overlying Pool:
  0
  0.0000E+00
  0
  0
  0
  0
Compartments:
  7
Compartment 1:
  0
  1
  1
  0.0000E+00
  5
  0.0000E+00   0.0000E+00
  2.5000E-01   6.2000E+00
  2.4400E+00   6.2000E-01
  2.4000E+01   0.0000E+00
  7.2000E+02   0.0000E+00
  1
  0.0000E+00
  5
  0.0000E+00   0.0000E+00
  2.5000E-01   6.2000E+00
  2.4400E+00   6.2000E-01
  2.4000E+01   0.0000E+00
  7.2000E+02   0.0000E+00
  1
  0.0000E+00
  0
  0
  0
  0
  0
Compartment 2:
  0
  1
  0
  0
  0
  0
  0
  0
  0
Compartment 3:
  0
  1
  0
  0
  0
  0
  0
  0
  0
Compartment 4:
  0
  1
  0
  0
  0
  0
```

```
  0
  0
  .
  0
Compartment 5:
  0
  1
  0
  0
  0
  0
  0
  0
  0
Compartment 6:
  0
  1
  0
  0
  0
  0
  0
  0
  0
Compartment 7:
  0
  1
  0
  0
  0
  0
  0
  0
  0
Pathways:
 12
Pathway 1:
  0

  0
  0
  0
  0
  1
  3
  0.0000E+00   0.0000E+00   0.0000E+00   0.0000E+00   0.0000E+00
  2.0333E+00   1.4420E+05   0.0000E+00   0.0000E+00   0.0000E+00
  7.2000E+02   1.4420E+05   0.0000E+00   0.0000E+00   0.0000E+00
  0
  0
  0
  0
  0
  0
Pathway 2:
  0
  0
  0
  0
  0
  1
  3
  0.0000E+00   0.0000E+00   0.0000E+00   0.0000E+00   0.0000E+00
  2.0333E+00   1.4420E+05   0.0000E+00   0.0000E+00   0.0000E+00
  7.2000E+02   1.4420E+05   0.0000E+00   0.0000E+00   0.0000E+00
  0
  0
  0
  0
  0
```

```
  0
Pathway 3:
  0
  0
  0
  0
  0
  1
  3
  0.0000E+00   1.3800E-01   0.0000E+00   0.0000E+00   0.0000E+00
  2.4000E+01   6.9200E-02   0.0000E+00   0.0000E+00   0.0000E+00
  7.2000E+02   6.9200E-02   0.0000E+00   0.0000E+00   0.0000E+00
  0
  0
  0
  0
  0
  0
Pathway 4:
  0
  0
  0
  0
  0
  1
  3
  0.0000E+00   4.1500E-01   8.9700E+01   4.2800E+01   1.0000E-01
  2.4000E+01   2.0800E-01   8.9700E+01   4.2800E+01   1.0000E-01
  7.2000E+02   2.0800E-01   8.9700E+01   4.2800E+01   1.0000E-01
  0
  0
  0
  0
  0
  0
Pathway 5:
  0
  0
  0
  0
  0
  1
  4
  0.0000E+00   0.0000E+00   0.0000E+00   0.0000E+00   0.0000E+00
  3.3300E-01   6.9600E-01   0.0000E+00   0.0000E+00   0.0000E+00
  2.4000E+01   3.4800E-01   0.0000E+00   0.0000E+00   0.0000E+00
  7.2000E+02   3.4800E-01   0.0000E+00   0.0000E+00   0.0000E+00
  0
  0
  0
  0
  0
  0
Pathway 6:
  0
  0
  0
  0
  0
  1
  4
  0.0000E+00   0.0000E+00   0.0000E+00   0.0000E+00   0.0000E+00
  3.3300E-01   5.0000E-01   0.0000E+00   0.0000E+00   0.0000E+00
  2.4000E+01   2.5000E-01   0.0000E+00   0.0000E+00   0.0000E+00
  7.2000E+02   2.5000E-01   0.0000E+00   0.0000E+00   0.0000E+00
  0
  0
  0
  0
  0
```

```
  0
Pathway 7:
  0
  0
  0
  0
  0
  1
  4
  0.0000E+00   7.5200E-01   0.0000E+00   0.0000E+00   0.0000E+00
  3.3300E-01   5.6000E-02   0.0000E+00   0.0000E+00   0.0000E+00
  2.4000E+01   2.8000E-02   0.0000E+00   0.0000E+00   0.0000E+00
  7.2000E+02   2.8000E-02   0.0000E+00   0.0000E+00   0.0000E+00
  0
  0
  0
  0
  0
  0
Pathway 8:
  0
  0
  0
  0
  0
  1
  4
  0.0000E+00   5.4100E-01   0.0000E+00   0.0000E+00   0.0000E+00
  3.3300E-01   4.0000E-02   0.0000E+00   0.0000E+00   0.0000E+00
  2.4000E+01   2.0000E-02   0.0000E+00   0.0000E+00   0.0000E+00
  7.2000E+02   2.0000E-02   0.0000E+00   0.0000E+00   0.0000E+00
  0
  0
  0
  0
  0
  0
Pathway 9:
  0
  0
  0
  0
  0
  1
  3
  0.0000E+00   0.0000E+00   0.0000E+00   0.0000E+00   0.0000E+00
  2.5000E-01   2.6800E-01   1.0000E+02   0.0000E+00   0.0000E+00
  7.2000E+02   2.6800E-01   1.0000E+02   0.0000E+00   0.0000E+00
  0
  0
  0
  0
  0
  0
Pathway 10:
  0
  0
  0
  0
  0
  1
  3
  0.0000E+00   5.0000E+03   0.0000E+00   0.0000E+00   0.0000E+00
  3.3300E-01   5.0000E+03   9.8000E+01   9.8000E+01   9.8000E+01
  7.2000E+02   5.0000E+03   9.8000E+01   9.8000E+01   9.8000E+01
  0
  0
  0
  0
  0
```

```
  0
Pathway 11:
  0
  0
  0
  0
  0
  1
  2
  0.0000E+00   5.0000E+01   0.0000E+00   0.0000E+00   0.0000E+00
  7.2000E+02   5.0000E+01   0.0000E+00   0.0000E+00   0.0000E+00
  0
  0
  0
  0
  0
  0
Pathway 12:
  0
  0
  0
  0
  0
  1
  2
  0.0000E+00   8.5000E+02   1.0000E+02   1.0000E+02   1.0000E+02
  7.2000E+02   8.5000E+02   1.0000E+02   1.0000E+02   1.0000E+02
  0
  0
  0
  0
  0
  0
Dose Locations:
  3
Location 1:
CR
  5
  0
  1
  2
  0.0000E+00   3.5000E-04
  7.2000E+02   3.5000E-04
  1
  4
  0.0000E+00   1.0000E+00
  2.4000E+01   6.0000E-01
  9.6000E+01   4.0000E-01
  7.2000E+02   4.0000E-01
Location 2:
EAB
  6
  1
  2
  0.0000E+00   1.8100E-04
  7.2000E+02   1.8100E-04
  1
  4
  0.0000E+00   3.5000E-04
  8.0000E+00   3.5000E-04
  2.4000E+01   3.5000E-04
  7.2000E+02   3.5000E-04
  0
Location 3:
LPZ
  6
  1
  5
  0.0000E+00   4.9500E-05
  8.0000E+00   3.6900E-05
```

```
   2.4000E+01    1.9500E-05
   9.6000E+01    7.8100E-06
   7.2000E+02    7.8100E-06
   1
   4
   0.0000E+00    3.5000E-04
   8.0000E+00    1.8000E-04
   2.4000E+01    2.3000E-04
   7.2000E+02    2.3000E-04
   0
Effective Volume Location:
   1
   6
   0.0000E+00    7.0200E-04
   2.0000E+00    3.1900E-04
   8.0000E+00    1.3000E-04
   2.4000E+01    1.0500E-04
   9.6000E+01    9.0000E-05
   7.2000E+02    9.0000E-05
Simulation Parameters:
   6
   0.0000E+00    5.0000E-02
   4.0000E+00    5.0000E-01
   8.0000E+00    1.0000E+00
   2.4000E+01    2.0000E+00
   4.8000E+01    2.4000E+01
   7.2000E+02    0.0000E+00
Output Filename:
C:\Program Files\radtrad303\ENW\Columbia _3u.o0
   1
   1
   1
   1
   1
End of Scenario File
```

Columbia_4f.psf

```
 Radtrad 3.03 4/15/2001
 Columbia AST - SGTS - Filtered
 Nuclide Inventory File:
 c:\program files\radtrad303\enw\columbia.nif
 Plant Power Level:
  3.5560E+03
 Compartments:
   7
 Compartment 1:
 DW
   3
  2.0050E+05
   1
   0
   0
   0
   0
 Compartment 2:
 WW
   3
  1.4420E+05
   0
   0
   0
   0
   0
 Compartment 3:
 RB
   3
  5.0000E+03
   0
   0
   0
   0
   0
 Compartment 4:
 SP
   3
  1.3730E+05
   0
   0
   0
   0
   0
 Compartment 5:
 CR
   1
  2.1400E+05
   0
   0
   0
   0
   0
 Compartment 6:
 Enviro
   2
  0.0000E+00
   0
   0
   0
   0
   0
 Compartment 7:
 Dummy
   3
  1.0000E+06
   0
   0
```

```
  0
  0
  0
Pathways:
 12
Pathway 1:
DW to WW
  1
  2
  2
Pathway 2:
WW to DW
  2
  1
  2
Pathway 3:
Failed SL to Dummy
  1
  7
  2
Pathway 4:
Intact SLs to Dummy
  1
  7
  2
Pathway 5:
DW to RB
  1
  3
  2
Pathway 6:
WW to RB
  2
  3
  2
Pathway 7:
Bypass DW to Dummy
  1
  7
  2
Pathway 8:
Bypass WW to Dummy
  2
  7
  2
Pathway 9:
SP to RB
  4
  3
  2
Pathway 10:
RB SGTS to Enviro
  3
  6
  2
Pathway 11:
Enviro to CR (filtered)
  6
  5
  2
Pathway 12:
CR to Enviro
  5

  6
  2
End of Plant Model File
Scenario Description Name:

Plant Model Filename:
```

```
Source Term:
  1
  1   1.0000E+00
c:\program files\radtrad303\defaults\fgr11&12.inp
c:\program files\radtrad303\enw\columbia.rft
  0.0000E+00
  1
  9.5000E-01   4.8500E-02   1.5000E-03   1.0000E+00
Overlying Pool:
  0
  0.0000E+00
  0
  0
  0
  0
Compartments:
  7
Compartment 1:
  0
  1
  1
  0.0000E+00
  5
  0.0000E+00   0.0000E+00
  2.5000E-01   6.2000E+00
  2.4400E+00   6.2000E-01
  2.4000E+01   0.0000E+00
  7.2000E+02   0.0000E+00
  1
  0.0000E+00
  5
  0.0000E+00   0.0000E+00
  2.5000E-01   6.2000E+00
  2.4400E+00   6.2000E-01
  2.4000E+01   0.0000E+00
  7.2000E+02   0.0000E+00
  1
  0.0000E+00
  0
  0
  0
  0
  0
Compartment 2:
  0
  1
  0
  0
  0
  0
  0
  0
  0
Compartment 3:
  0
  1
  0
  0
  0
  0
  0
  0
  0
Compartment 4:
  0
  1
  0
  0
  0
```

```
  0
  0
  0
  0
Compartment 5:
  0
  1
  0
  0
  0
  0
  0
  0
  0
Compartment 6:
  0
  1
  0
  0
  0
  0
  0
  0
  0
Compartment 7:
  0
  1
  0
  0
  0
  0
  0
  0
  0
Pathways:
 12
Pathway 1:
  0
  0
  0
  0
  0
  1
  3
  0.0000E+00   0.0000E+00   0.0000E+00   0.0000E+00   0.0000E+00
  2.0333E+00   1.4420E+05   0.0000E+00   0.0000E+00   0.0000E+00
  7.2000E+02   1.4420E+05   0.0000E+00   0.0000E+00   0.0000E+00
  0
  0
  0
  0
  0
  0
Pathway 2:
  0
  0
  0
  0
  0
  1
  3
  0.0000E+00   0.0000E+00   0.0000E+00   0.0000E+00   0.0000E+00
  2.0333E+00   1.4420E+05   0.0000E+00   0.0000E+00   0.0000E+00
  7.2000E+02   1.4420E+05   0.0000E+00   0.0000E+00   0.0000E+00
  0
  0
  0
  0
  0
  0
```

```
Pathway 3:
  0
  0
  0
  0
  0
  1
  3
  0.0000E+00   1.3800E-01   0.0000E+00   0.0000E+00   0.0000E+00
  2.4000E+01   6.9200E-02   0.0000E+00   0.0000E+00   0.0000E+00
  7.2000E+02   6.9200E-02   0.0000E+00   0.0000E+00   0.0000E+00
  0
  0
  0
  0
  0
  0
Pathway 4:
  0
  0
  0
  0
  0
  1
  3
  0.0000E+00   4.1500E-01   8.9700E+01   4.2800E+01   1.0000E-01
  2.4000E+01   2.0800E-01   8.9700E+01   4.2800E+01   1.0000E-01
  7.2000E+02   2.0800E-01   8.9700E+01   4.2800E+01   1.0000E-01
  0
  0
  0
  0
  0
  0
Pathway 5:
  0
  0
  0
  0
  0
  1
  4
  0.0000E+00   0.0000E+00   0.0000E+00   0.0000E+00   0.0000E+00
  3.3300E-01   6.9600E-01   0.0000E+00   0.0000E+00   0.0000E+00
  2.4000E+01   3.4800E-01   0.0000E+00   0.0000E+00   0.0000E+00
  7.2000E+02   3.4800E-01   0.0000E+00   0.0000E+00   0.0000E+00
  0
  0
  0
  0
  0
  0
Pathway 6:
  0
  0
  0
  0
  0
  1
  4
  0.0000E+00   0.0000E+00   0.0000E+00   0.0000E+00   0.0000E+00
  3.3300E-01   5.0000E-01   0.0000E+00   0.0000E+00   0.0000E+00
  2.4000E+01   2.5000E-01   0.0000E+00   0.0000E+00   0.0000E+00
  7.2000E+02   2.5000E-01   0.0000E+00   0.0000E+00   0.0000E+00
  0
  0
  0
  0
  0
  0
```

```
Pathway 7:
  0
  0
  0
  0
  0
  1
  4
  0.0000E+00   7.5200E-01   0.0000E+00   0.0000E+00   0.0000E+00
  3.3300E-01   5.6000E-02   0.0000E+00   0.0000E+00   0.0000E+00
  2.4000E+01   2.8000E-02   0.0000E+00   0.0000E+00   0.0000E+00
  7.2000E+02   2.8000E-02   0.0000E+00   0.0000E+00   0.0000E+00
  0
  0
  0
  0
  0
  0
Pathway 8:
  0
  0
  0
  0
  0
  1
  4
  0.0000E+00   5.4100E-01   0.0000E+00   0.0000E+00   0.0000E+00
  3.3300E-01   4.0000E-02   0.0000E+00   0.0000E+00   0.0000E+00
  2.4000E+01   2.0000E-02   0.0000E+00   0.0000E+00   0.0000E+00
  7.2000E+02   2.0000E-02   0.0000E+00   0.0000E+00   0.0000E+00
  0
  0
  0

  0
  0
  0
Pathway 9:
  0
  0
  0
  0
  0
  1
  3
  0.0000E+00   0.0000E+00   0.0000E+00   0.0000E+00   0.0000E+00
  2.5000E-01   2.6800E-01   1.0000E+02   0.0000E+00   0.0000E+00
  7.2000E+02   2.6800E-01   1.0000E+02   0.0000E+00   0.0000E+00
  0
  0
  0
  0
  0
  0
Pathway 10:
  0
  0
  0
  0
  0
  1
  3
  0.0000E+00   5.0000E+03   0.0000E+00   0.0000E+00   0.0000E+00
  3.3300E-01   5.0000E+03   9.8000E+01   9.8000E+01   9.8000E+01
  7.2000E+02   5.0000E+03   9.8000E+01   9.8000E+01   9.8000E+01
  0
  0
  0
  0
  0
```

```
  0
Pathway 11:
  0
  0
  0
  0
  0
  1
  2
  0.0000E+00   8.0000E+02   9.9000E+01   9.5000E+01   9.5000E+01
  7.2000E+02   8.0000E+02   9.9000E+01   9.5000E+01   9.5000E+01
  0
  0
  0
  0
  0
  0
Pathway 12:
  0
  0
  0
  0
  0
  1
  2
  0.0000E+00   8.5000E+02   1.0000E+02   1.0000E+02   1.0000E+02
  7.2000E+02   8.5000E+02   1.0000E+02   1.0000E+02   1.0000E+02
  0
  0
  0
  0
  0
  0
Dose Locations:
  3
Location 1:
CR
  5
  0
  1
  2
  0.0000E+00   3.5000E-04
  7.2000E+02   3.5000E-04
  1
  4
  0.0000E+00   1.0000E+00
  2.4000E+01   6.0000E-01
  9.6000E+01   4.0000E-01
  7.2000E+02   4.0000E-01
Location 2:
EAB
  6
  1
  2
  0.0000E+00   1.8100E-04
  7.2000E+02   1.8100E-04
  1
  4
  0.0000E+00   3.5000E-04
  8.0000E+00   3.5000E-04
  2.4000E+01   3.5000E-04
  7.2000E+02   3.5000E-04
  0
Location 3:
LPZ
  6
  1
  5
  0.0000E+00   4.9500E-05
  8.0000E+00   3.6900E-05
```

```
   2.4000E+01   1.9500E-05
   9.6000E+01   7.8100E-06
   7.2000E+02   7.8100E-06
   1
   4
   0.0000E+00   3.5000E-04
   8.0000E+00   1.8000E-04
   2.4000E+01   2.3000E-04
   7.2000E+02   2.3000E-04
   0
 Effective Volume Location:
   1
   6
   0.0000E+00   1.4300E-04
   2.0000E+00   1.0500E-04
   8.0000E+00   4.1400E-05
   2.4000E+01   3.5200E-05
   9.6000E+01   3.0300E-05
   7.2000E+02   3.0300E-05
 Simulation Parameters:
   6
   0.0000E+00   5.0000E-02
   4.0000E+00   5.0000E-01
   8.0000E+00   1.0000E+00
   2.4000E+01   2.0000E+00
   4.8000E+01   2.4000E+01
   7.2000E+02   0.0000E+00
 Output Filename:
 C:\Program Files\radtrad303\ENW\Columbia_4f.o0
   1
   1
   1
   1
   1
 End of Scenario File
```

Columbia_4u.psf

```
 Radtrad 3.03 4/15/2001
 Columbia AST - SGTS - Unfiltered
 Nuclide Inventory File:
 c:\Program Files\radtrad303\ENW\columbia.nif
 Plant Power Level:
  3.5560E+03
 Compartments:
   7
 Compartment 1:
 DW
   3
  2.0050E+05
   1
   0
   0
   0
   0
 Compartment 2:
 WW
   3
  1.4420E+05
   0
   0
   0
   0
   0
 Compartment 3:
 RB
   3
  5.0000E+03
   0
   0
   0
   0
   0
 Compartment 4:
 SP
   3
  1.3730E+05
   0
   0
   0
   0
   0
 Compartment 5:
 CR
   1
  2.1400E+05
   0
   0
   0
   0
   0
 Compartment 6:
 Enviro
   2
  0.0000E+00
   0
   0
   0
   0
   0
 Compartment 7:
 Dummy
   3
  1.0000E+06
   0
   0
```

```
  0
  0
  0
Pathways:
 12
Pathway 1:
DW to WW
  1
  2
  2
Pathway 2:
WW to DW
  2
  1
  2
Pathway 3:
Failed SL to Dummy
  1
  7
  2
Pathway 4:
Intact SLs to Dummy
  1
  7
  2
Pathway 5:
DW to RB
  1
  3
  2
Pathway 6:
WW to RB
  2
  3
  2
Pathway 7:
Bypass DW to Dummy
  1
  7
  2
Pathway 8:
Bypass WW to Dummy
  2
  7
  2
Pathway 9:
SP to RB
  4
  3
  2
Pathway 10:
RB SGTS to Enviro
  3
  6
  2
Pathway 11:
Enviro to CR (unfiltered)
  6
  5
  2
Pathway 12:
CR to Enviro
  5
  6
  2
End of Plant Model File
Scenario Description Name:

Plant Model Filename:
```

```
Source Term:
  1
  1   1.0000E+00
c:\Program Files\radtrad303\defaults\fgr11&12.inp
c:\Program Files\radtrad303\ENW\columbia.rft
  0.0000E+00
  1
  9.5000E-01   4.8500E-02   1.5000E-03   1.0000E+00
Overlying Pool:
  0
  0.0000E+00
  0
  0
  0
  0
Compartments:
  7
Compartment 1:
  0
  1
  1
  0.0000E+00
  5
  0.0000E+00   0.0000E+00
  2.5000E-01   6.2000E+00

  2.4400E+00   6.2000E-01
  2.4000E+01   0.0000E+00
  7.2000E+02   0.0000E+00
  1
  0.0000E+00
  5
  0.0000E+00   0.0000E+00
  2.5000E-01   6.2000E+00
  2.4400E+00   6.2000E-01
  2.4000E+01   0.0000E+00
  7.2000E+02   0.0000E+00
  1
  0.0000E+00
  0
  0
  0
  0
  0
Compartment 2:
  0
  1
  0
  0
  0
  0
  0
  0
  0
Compartment 3:
  0
  1
  0
  0
  0
  0
  0
  0
  0
Compartment 4:
  0
  1
  0
  0
  0
```

```
  0
  0
  0
  0
Compartment 5:
  0
  1
  0
  0
  0
  0
  0
  0
  0
Compartment 6:
  0
  1
  0
  0
  0
  0
  0
  0
  0
Compartment 7:
  0
  1
  0
  0
  0
  0
  0
  0
  0
Pathways:
 12
Pathway 1:
  0
  0
  0
  0
  0
  1
  3
  0.0000E+00   0.0000E+00   0.0000E+00   0.0000E+00   0.0000E+00
  2.0333E+00   1.4420E+05   0.0000E+00   0.0000E+00   0.0000E+00
  7.2000E+02   1.4420E+05   0.0000E+00   0.0000E+00   0.0000E+00
  0
  0
  0
  0
  0
  0
Pathway 2:
  0
  0
  0
  0
  0
  1
  3
  0.0000E+00   0.0000E+00   0.0000E+00   0.0000E+00   0.0000E+00
  2.0333E+00   1.4420E+05   0.0000E+00   0.0000E+00   0.0000E+00
  7.2000E+02   1.4420E+05   0.0000E+00   0.0000E+00   0.0000E+00
  0
  0
  0
  0
  0
  0
```

```
Pathway 3:
  0
  0
  0
  0
  0
  1
  3
  0.0000E+00   1.3800E-01   0.0000E+00   0.0000E+00   0.0000E+00
  2.4000E+01   6.9200E-02   0.0000E+00   0.0000E+00   0.0000E+00
  7.2000E+02   6.9200E-02   0.0000E+00   0.0000E+00   0.0000E+00
  0
  0
  0
  0
  0
  0
Pathway 4:
  0
  0
  0
  0
  0
  1
  3
  0.0000E+00   4.1500E-01   8.9700E+01   4.2800E+01   1.0000E-01
  2.4000E+01   2.0800E-01   8.9700E+01   4.2800E+01   1.0000E-01
  7.2000E+02   2.0800E-01   8.9700E+01   4.2800E+01   1.0000E-01
  0
  0
  0
  0
  0
  0
Pathway 5:
  0
  0
  0
  0
  0
  1
  4
  0.0000E+00   0.0000E+00   0.0000E+00   0.0000E+00   0.0000E+00
  3.3300E-01   6.9600E-01   0.0000E+00   0.0000E+00   0.0000E+00
  2.4000E+01   3.4800E-01   0.0000E+00   0.0000E+00   0.0000E+00
  7.2000E+02   3.4800E-01   0.0000E+00   0.0000E+00   0.0000E+00
  0
  0
  0
  0
  0
  0
Pathway 6:
  0
  0
  0

  0
  0
  1
  4
  0.0000E+00   0.0000E+00   0.0000E+00   0.0000E+00   0.0000E+00
  3.3300E-01   5.0000E-01   0.0000E+00   0.0000E+00   0.0000E+00
  2.4000E+01   2.5000E-01   0.0000E+00   0.0000E+00   0.0000E+00
  7.2000E+02   2.5000E-01   0.0000E+00   0.0000E+00   0.0000E+00
  0
  0
  0
  0
  0
```

```
  0
Pathway 7:
  0
  0
  0
  0
  0
  1
  4
  0.0000E+00   7.5200E-01   0.0000E+00   0.0000E+00   0.0000E+00
  3.3300E-01   5.6000E-02   0.0000E+00   0.0000E+00   0.0000E+00
  2.4000E+01   2.8000E-02   0.0000E+00   0.0000E+00   0.0000E+00
  7.2000E+02   2.8000E-02   0.0000E+00   0.0000E+00   0.0000E+00
  0
  0
  0
  0
  0
  0
Pathway 8:
  0
  0
  0
  0
  0
  1
  4
  0.0000E+00   5.4100E-01   0.0000E+00   0.0000E+00   0.0000E+00
  3.3300E-01   4.0000E-02   0.0000E+00   0.0000E+00   0.0000E+00
  2.4000E+01   2.0000E-02   0.0000E+00   0.0000E+00   0.0000E+00
  7.2000E+02   2.0000E-02   0.0000E+00   0.0000E+00   0.0000E+00
  0
  0
  0
  0
  0
  0
Pathway 9:
  0
  0
  0
  0
  0
  1
  3
  0.0000E+00   0.0000E+00   0.0000E+00   0.0000E+00   0.0000E+00
  2.5000E-01   2.6800E-01   1.0000E+02   0.0000E+00   0.0000E+00
  7.2000E+02   2.6800E-01   1.0000E+02   0.0000E+00   0.0000E+00
  0
  0
  0
  0
  0
  0
Pathway 10:
  0
  0
  0
  0
  0
  1
  3
  0.0000E+00   5.0000E+03   0.0000E+00   0.0000E+00   0.0000E+00
  3.3300E-01   5.0000E+03   9.8000E+01   9.8000E+01   9.8000E+01
  7.2000E+02   5.0000E+03   9.8000E+01   9.8000E+01   9.8000E+01
  0
  0
  0
  0
  0
```

```
  0
Pathway 11:
  0
  0
  0
  0
  0
  1
  2
  0.0000E+00   5.0000E+01   0.0000E+00   0.0000E+00   0.0000E+00
  7.2000E+02   5.0000E+01   0.0000E+00   0.0000E+00   0.0000E+00
  0
  0
  0
  0
  0
  0
Pathway 12:
  0
  0
  0
  0
  0
  1
  2
  0.0000E+00   8.5000E+02   1.0000E+02   1.0000E+02   1.0000E+02
  7.2000E+02   8.5000E+02   1.0000E+02   1.0000E+02   1.0000E+02
  0
  0
  0
  0
  0
  0
Dose Locations:
  3
Location 1:
CR
  5
  0
  1
  2
  0.0000E+00   3.5000E-04
  7.2000E+02   3.5000E-04
  1
  4
  0.0000E+00   1.0000E+00
  2.4000E+01   6.0000E-01
  9.6000E+01   4.0000E-01
  7.2000E+02   4.0000E-01
Location 2:
EAB
  6
  1
  2
  0.0000E+00   1.8100E-04
  7.2000E+02   1.8100E-04
  1
  4
  0.0000E+00   3.5000E-04
  8.0000E+00   3.5000E-04
  2.4000E+01   3.5000E-04
  7.2000E+02   3.5000E-04
  0
Location 3:
LPZ
  6
  1
  5
  0.0000E+00   4.9500E-05
  8.0000E+00   3.6900E-05
```

```
   2.4000E+01   1.9500E-05
   9.6000E+01   7.8100E-06
   7.2000E+02   7.8100E-06
   1
   4
   0.0000E+00   3.5000E-04
   8.0000E+00   1.8000E-04
   2.4000E+01   2.3000E-04
   7.2000E+02   2.3000E-04
   0
Effective Volume Location:
   1
   6
   0.0000E+00   6.9500E-04
   2.0000E+00   3.3600E-04
   8.0000E+00   1.2800E-04
   2.4000E+01   9.7200E-05
   9.6000E+01   7.6900E-05
   7.2000E+02   7.6900E-05
Simulation Parameters:
   6
   0.0000E+00   5.0000E-02
   4.0000E+00   5.0000E-01
   8.0000E+00   1.0000E+00
   2.4000E+01   2.0000E+00
   4.8000E+01   2.4000E+01
   7.2000E+02   0.0000E+00
Output Filename:
C:\Program Files\radtrad303\ENW\Columbia _4u.o0
   1
   1
   1
   1
   1
End of Scenario File
```

Columbia_5f.psf

```
 Radtrad 3.03 4/15/2001
 Columbia AST - ESF - Filtered
 Nuclide Inventory File:
 C:\Program Files\radtrad303\ENW\columbiaesf.NIF
 Plant Power Level:
  3.5560E+03
 Compartments:
   7
 Compartment 1:
 DW
   3
  2.0050E+05
   1
   0
   0
   0
   0
 Compartment 2:
 WW
   3
  1.4420E+05
   0
   0
   0
   0
   0
 Compartment 3:
 RB
   3
  5.0000E+03
   0
   0
   0
   0
   0
 Compartment 4:
 SP
   3
  1.3730E+05
   0
   0
   0
   0
   0
 Compartment 5:
 CR
   1
  2.1400E+05
   0
   0
   0
   0
   0
 Compartment 6:
 Enviro
   2
  0.0000E+00
   0
   0
   0
   0
   0
 Compartment 7:
 Dummy
   3
  1.0000E+06
   0
   0
```

```
  0
  0
  0
Pathways:
 12
Pathway 1:
DW to WW
  1
  2
  2
Pathway 2:
WW to DW
  2
  1
  2
Pathway 3:
Failed SL to Dummy
  1
  7
  2
Pathway 4:
Intact SLs to Dummy
  1
  7
  2
Pathway 5:
DW to RB
  1
  3
  2
Pathway 6:
WW to RB
  2
  3
  2
Pathway 7:
Bypass DW to Dummy
  1
  7
  2
Pathway 8:
Bypass WW to Dummy
  2
  7
  2
Pathway 9:
SP to RB
  4
  3
  2
Pathway 10:
RB SGTS to Enviro
  3
  6
  2
Pathway 11:
Enviro to CR (filtered)
  6
  5
  2
Pathway 12:
CR to Enviro
  5
  6
  2
End of Plant Model File
Scenario Description Name:

Plant Model Filename:
```

```
Source Term:
  2
  1   0.0000E+00
  4   1.0000E+00
c:\Program Files\radtrad303\defaults\fgr11&12.inp
c:\Program Files\radtrad303\ENW\columbia.rft
  0.0000E+00
  1
  9.5000E-01   4.8500E-02   1.5000E-03   1.0000E+00
Overlying Pool:
  0
  0.0000E+00
  0
  0
  0
  0
Compartments:
  7
Compartment 1:
  0
  1
  1
  0.0000E+00
  5
  0.0000E+00   0.0000E+00
  2.5000E-01   6.2000E+00
  2.4400E+00   6.2000E-01
  2.4000E+01   0.0000E+00
  7.2000E+02   0.0000E+00
  1
  0.0000E+00
  5
  0.0000E+00   0.0000E+00
  2.5000E-01   6.2000E+00
  2.4400E+00   6.2000E-01
  2.4000E+01   0.0000E+00
  7.2000E+02   0.0000E+00
  1
  0.0000E+00
  0
  0
  0
  0
  0
Compartment 2:
  0
  1
  0
  0
  0
  0
  0
  0
  0
Compartment 3:
  0
  1
  0
  0
  0
  0
  0
  0
  0
Compartment 4:
  0
  1
  0
  0
  0
```

```
   0
   0
   0
   0
 Compartment 5:
   0
   1
   0
   0
   0
   0
   0
   0
   0
 Compartment 6:
   0
   1
   0
   0
   0
   0
   0
   0
   0
 Compartment 7:
   0
   1
   0
   0
   0
   0
   0
   0
   0
 Pathways:
  12
 Pathway 1:
   0
   0
   0
   0
   0
   1
   3
   0.0000E+00   0.0000E+00   0.0000E+00   0.0000E+00   0.0000E+00
   2.0333E+00   1.4420E+05   0.0000E+00   0.0000E+00   0.0000E+00
   7.2000E+02   1.4420E+05   0.0000E+00   0.0000E+00   0.0000E+00
   0
   0
   0
   0
   0
   0
 Pathway 2:
   0
   0
   0
   0
   0
   1
   3
   0.0000E+00   0.0000E+00   0.0000E+00   0.0000E+00   0.0000E+00
   2.0333E+00   1.4420E+05   0.0000E+00   0.0000E+00   0.0000E+00
   7.2000E+02   1.4420E+05   0.0000E+00   0.0000E+00   0.0000E+00
   0
   0
   0
   0
   0
   0
```

```
Pathway 3:
  0
  0
  0
  0
  0
  1
  3
  0.0000E+00   1.3800E-01   0.0000E+00   0.0000E+00   0.0000E+00
  2.4000E+01   6.9200E-02   0.0000E+00   0.0000E+00   0.0000E+00

  7.2000E+02   6.9200E-02   0.0000E+00   0.0000E+00   0.0000E+00
  0
  0
  0
  0
  0
  0
Pathway 4:
  0
  0
  0
  0
  0
  1
  3
  0.0000E+00   4.1500E-01   8.9700E+01   4.2800E+01   1.0000E-01
  2.4000E+01   2.0800E-01   8.9700E+01   4.2800E+01   1.0000E-01
  7.2000E+02   2.0800E-01   8.9700E+01   4.2800E+01   1.0000E-01
  0
  0
  0
  0
  0
  0
Pathway 5:
  0
  0
  0
  0
  0
  1
  4
  0.0000E+00   0.0000E+00   0.0000E+00   0.0000E+00   0.0000E+00
  3.3300E-01   6.9600E-01   0.0000E+00   0.0000E+00   0.0000E+00
  2.4000E+01   3.4800E-01   0.0000E+00   0.0000E+00   0.0000E+00
  7.2000E+02   3.4800E-01   0.0000E+00   0.0000E+00   0.0000E+00
  0
  0
  0
  0
  0
  0
Pathway 6:
  0
  0
  0
  0
  0
  1
  4
  0.0000E+00   0.0000E+00   0.0000E+00   0.0000E+00   0.0000E+00
  3.3300E-01   5.0000E-01   0.0000E+00   0.0000E+00   0.0000E+00
  2.4000E+01   2.5000E-01   0.0000E+00   0.0000E+00   0.0000E+00
  7.2000E+02   2.5000E-01   0.0000E+00   0.0000E+00   0.0000E+00
  0
  0
  0
  0
  0
```

```
  0
Pathway 7:
  0
  0
  0
  0
  0
  1
  4
  0.0000E+00   7.5200E-01   0.0000E+00   0.0000E+00   0.0000E+00
  3.3300E-01   5.6000E-02   0.0000E+00   0.0000E+00   0.0000E+00
  2.4000E+01   2.8000E-02   0.0000E+00   0.0000E+00   0.0000E+00
  7.2000E+02   2.8000E-02   0.0000E+00   0.0000E+00   0.0000E+00
  0
  0
  0
  0
  0
  0
Pathway 8:
  0
  0
  0
  0
  0
  1
  4
  0.0000E+00   5.4100E-01   0.0000E+00   0.0000E+00   0.0000E+00
  3.3300E-01   4.0000E-02   0.0000E+00   0.0000E+00   0.0000E+00
  2.4000E+01   2.0000E-02   0.0000E+00   0.0000E+00   0.0000E+00
  7.2000E+02   2.0000E-02   0.0000E+00   0.0000E+00   0.0000E+00
  0
  0
  0
  0
  0
  0
Pathway 9:
  0
  0
  0
  0
  0
  1
  3
  0.0000E+00   0.0000E+00   0.0000E+00   0.0000E+00   0.0000E+00
  2.5000E-01   2.6800E-01   1.0000E+02   0.0000E+00   0.0000E+00
  7.2000E+02   2.6800E-01   1.0000E+02   0.0000E+00   0.0000E+00
  0
  0
  0
  0
  0
  0
Pathway 10:
  0
  0
  0
  0
  0
  1
  3
  0.0000E+00   5.0000E+03   0.0000E+00   0.0000E+00   0.0000E+00
  3.3300E-01   5.0000E+03   9.8000E+01   9.8000E+01   9.8000E+01
  7.2000E+02   5.0000E+03   9.8000E+01   9.8000E+01   9.8000E+01
  0
  0
  0
  0
  0
```

```
  0
Pathway 11:
  0
  0
  0
  0
  0
  1
  2
  0.0000E+00   8.0000E+02   9.9000E+01   9.5000E+01   9.5000E+01
  7.2000E+02   8.0000E+02   9.9000E+01   9.5000E+01   9.5000E+01
  0
  0
  0
  0
  0
  0
Pathway 12:
  0
  0
  0
  0
  0
  1
  2
  0.0000E+00   8.5000E+02   1.0000E+02   1.0000E+02   1.0000E+02
  7.2000E+02   8.5000E+02   1.0000E+02   1.0000E+02   1.0000E+02
  0
  0
  0
  0
  0
  0
Dose Locations:
  3
Location 1:
CR
  5
  0
  1
  2
  0.0000E+00   3.5000E-04
  7.2000E+02   3.5000E-04
  1
  4
  0.0000E+00   1.0000E+00
  2.4000E+01   6.0000E-01
  9.6000E+01   4.0000E-01
  7.2000E+02   4.0000E-01
Location 2:
EAB
  6
  1
  2
  0.0000E+00   1.8100E-04
  7.2000E+02   1.8100E-04
  1
  4
  0.0000E+00   3.5000E-04
  8.0000E+00   3.5000E-04
  2.4000E+01   3.5000E-04
  7.2000E+02   3.5000E-04
  0
Location 3:
LPZ
  6
  1
  5
  0.0000E+00   4.9500E-05
  8.0000E+00   3.6900E-05
```

```
   2.4000E+01   1.9500E-05
   9.6000E+01   7.8100E-06
   7.2000E+02   7.8100E-06
   1
   4
   0.0000E+00   3.5000E-04
   8.0000E+00   1.8000E-04
   2.4000E+01   2.3000E-04
   7.2000E+02   2.3000E-04
   0
Effective Volume Location:
   1
   6
   0.0000E+00   1.4300E-04
   2.0000E+00   1.0500E-04
   8.0000E+00   4.1400E-05
   2.4000E+01   3.5200E-05
   9.6000E+01   3.0300E-05
   7.2000E+02   3.0300E-05
Simulation Parameters:
   6
   0.0000E+00   5.0000E-02
   4.0000E+00   5.0000E-01
   8.0000E+00   1.0000E+00
   2.4000E+01   2.0000E+00
   4.8000E+01   2.4000E+01
   7.2000E+02   0.0000E+00
Output Filename:
C:\Program Files\radtrad303\ENW\Columbia _5f.o0
   1
   1
   1
   1
   1
End of Scenario File
```

Columbia_5u.psf

```
Radtrad 3.03 4/15/2001
Columbia AST - ESF Release - Unfiltered
Nuclide Inventory File:
C:\Program Files\radtrad303\ENW\columbiaesf.NIF
Plant Power Level:
 3.5560E+03
Compartments:
  7
Compartment 1:
DW
  3
 2.0050E+05
  1
  0
  0
  0
  0
Compartment 2:
WW
  3
 1.4420E+05
  0
  0
  0
  0
  0
Compartment 3:
RB
  3
 5.0000E+03
  0
  0
  0
  0
  0
Compartment 4:
SP
  3
 1.3730E+05
  0
  0
  0
  0
  0
Compartment 5:
CR
  1
 2.1400E+05
  0
  0
  0
  0
  0
Compartment 6:
Enviro
  2
 0.0000E+00
  0
  0
  0
  0
  0
Compartment 7:
Dummy
  3
 1.0000E+06
  0
  0
```

```
  0
  0
  0
Pathways:
 12
Pathway 1:
DW to WW
  1
  2
  2
Pathway 2:
WW to DW
  2
  1
  2
Pathway 3:
Failed SL to Dummy
  1
  7
  2
Pathway 4:
Intact SLs to Dummy
  1
  7
  2
Pathway 5:
DW to RB
  1
  3
  2
Pathway 6:
WW to RB
  2
  3
  2
Pathway 7:
Bypass DW to Dummy
  1
  7
  2
Pathway 8:
Bypass WW to Dummy
  2
  7
  2
Pathway 9:
SP to RB
  4
  3
  2
Pathway 10:
RB SGTS to Enviro
  3
  6
  2
Pathway 11:
Enviro to CR (unfiltered)
  6
  5
  2
Pathway 12:
CR to Enviro
  5
  6
  2
End of Plant Model File
Scenario Description Name:

Plant Model Filename:
```

```
Source Term:
  2
  1   0.0000E+00
  4   1.0000E+00
c:\Program Files\radtrad303\defaults\fgr11&12.inp
C:\Program Files\radtrad303\ENW\columbia.RFT
  0.0000E+00
  1
  9.5000E-01   4.8500E-02   1.5000E-03   1.0000E+00
Overlying Pool:
  0
  0.0000E+00
  0
  0
  0
  0
Compartments:
  7
Compartment 1:
  0
  1
  1
  0.0000E+00
  5
  0.0000E+00   0.0000E+00
  2.5000E-01   6.2000E+00
  2.4400E+00   6.2000E-01
  2.4000E+01   0.0000E+00
  7.2000E+02   0.0000E+00
  1
  0.0000E+00
  5
  0.0000E+00   0.0000E+00
  2.5000E-01   6.2000E+00
  2.4400E+00   6.2000E-01
  2.4000E+01   0.0000E+00
  7.2000E+02   0.0000E+00
  1
  0.0000E+00
  0
  0
  0
  0
  0
Compartment 2:
  0
  1
  0
  0
  0
  0
  0
  0
  0
Compartment 3:
  0
  1
  0
  0
  0
  0
  0
  0
  0
Compartment 4:
  0
  1
  0
  0
  0
```

```
  0
  0
  0
  0
Compartment 5:
  0
  1
  0
  0
  0
  0
  0
  0
  0
Compartment 6:
  0
  1
  0
  0
  0
  0
  0
  0
  0
Compartment 7:
  0
  1
  0
  0
  0
  0
  0
  0
  0
Pathways:
 12
Pathway 1:
  0
  0
  0
  0
  0
  1
  3
  0.0000E+00   0.0000E+00   0.0000E+00   0.0000E+00   0.0000E+00
  2.0333E+00   1.4420E+05   0.0000E+00   0.0000E+00   0.0000E+00
  7.2000E+02   1.4420E+05   0.0000E+00   0.0000E+00   0.0000E+00
  0
  0
  0
  0
  0
  0
Pathway 2:
  0
  0
  0
  0
  0
  1
  3
  0.0000E+00   0.0000E+00   0.0000E+00   0.0000E+00   0.0000E+00
  2.0333E+00   1.4420E+05   0.0000E+00   0.0000E+00   0.0000E+00
  7.2000E+02   1.4420E+05   0.0000E+00   0.0000E+00   0.0000E+00
  0
  0
  0
  0
  0
  0
```

```
Pathway 3:
  0
  0
  0
  0
  0
  1
  3
  0.0000E+00   1.3800E-01   0.0000E+00   0.0000E+00   0.0000E+00
  2.4000E+01   6.9200E-02   0.0000E+00   0.0000E+00   0.0000E+00
  7.2000E+02   6.9200E-02   0.0000E+00   0.0000E+00   0.0000E+00
  0
  0
  0
  0
  0
  0
Pathway 4:
  0
  0
  0
  0
  0
  1
  3
  0.0000E+00   4.1500E-01   8.9700E+01   4.2800E+01   1.0000E-01
  2.4000E+01   2.0800E-01   8.9700E+01   4.2800E+01   1.0000E-01
  7.2000E+02   2.0800E-01   8.9700E+01   4.2800E+01   1.0000E-01
  0
  0
  0
  0
  0
  0
Pathway 5:
  0
  0
  0
  0
  0
  1
  4
  0.0000E+00   0.0000E+00   0.0000E+00   0.0000E+00   0.0000E+00
  3.3300E-01   6.9600E-01   0.0000E+00   0.0000E+00   0.0000E+00
  2.4000E+01   3.4800E-01   0.0000E+00   0.0000E+00   0.0000E+00
  7.2000E+02   3.4800E-01   0.0000E+00   0.0000E+00   0.0000E+00
  0
  0
  0
  0
  0
  0
Pathway 6:
  0
  0
  0
  0
  0
  1
  4
  0.0000E+00   0.0000E+00   0.0000E+00   0.0000E+00   0.0000E+00
  3.3300E-01   5.0000E-01   0.0000E+00   0.0000E+00   0.0000E+00
  2.4000E+01   2.5000E-01   0.0000E+00   0.0000E+00   0.0000E+00
  7.2000E+02   2.5000E-01   0.0000E+00   0.0000E+00   0.0000E+00
  0
  0
  0
  0
  0
  0
```

```
Pathway 7:
  0
  0
  0
  0
  0
  1
  4
  0.0000E+00   7.5200E-01   0.0000E+00   0.0000E+00   0.0000E+00
  3.3300E-01   5.6000E-02   0.0000E+00   0.0000E+00   0.0000E+00
  2.4000E+01   2.8000E-02   0.0000E+00   0.0000E+00   0.0000E+00
  7.2000E+02   2.8000E-02   0.0000E+00   0.0000E+00   0.0000E+00
  0
  0
  0
  0
  0
  0
Pathway 8:
  0
  0
  0
  0
  0
  1
  4
  0.0000E+00   5.4100E-01   0.0000E+00   0.0000E+00   0.0000E+00
  3.3300E-01   4.0000E-02   0.0000E+00   0.0000E+00   0.0000E+00
  2.4000E+01   2.0000E-02   0.0000E+00   0.0000E+00   0.0000E+00
  7.2000E+02   2.0000E-02   0.0000E+00   0.0000E+00   0.0000E+00
  0
  0
  0
  0
  0
  0
Pathway 9:
  0
  0
  0
  0
  0
  1
  3
  0.0000E+00   0.0000E+00   0.0000E+00   0.0000E+00   0.0000E+00
  2.5000E-01   2.6800E-01   1.0000E+02   0.0000E+00   0.0000E+00
  7.2000E+02   2.6800E-01   1.0000E+02   0.0000E+00   0.0000E+00
  0
  0
  0
  0
  0
  0
Pathway 10:
  0
  0
  0
  0
  0
  1
  3
  0.0000E+00   5.0000E+03   0.0000E+00   0.0000E+00   0.0000E+00
  3.3300E-01   5.0000E+03   9.8000E+01   9.8000E+01   9.8000E+01
  7.2000E+02   5.0000E+03   9.8000E+01   9.8000E+01   9.8000E+01
  0
  0
  0
  0
  0
  0
```

```
Pathway 11:
  0
  0
  0
  0
  0
  1
  2
  0.0000E+00   5.0000E+01   0.0000E+00   0.0000E+00   0.0000E+00
  7.2000E+02   5.0000E+01   0.0000E+00   0.0000E+00   0.0000E+00
  0
  0
  0
  0
  0
  0
Pathway 12:
  0
  0
  0
  0
  0
  1
  2
  0.0000E+00   8.5000E+02   1.0000E+02   1.0000E+02   1.0000E+02
  7.2000E+02   8.5000E+02   1.0000E+02   1.0000E+02   1.0000E+02
  0
  0
  0
  0
  0
  0
Dose Locations:
  3
Location 1:
CR
  5
  0
  1
  2
  0.0000E+00   3.5000E-04
  7.2000E+02   3.5000E-04
  1
  4
  0.0000E+00   1.0000E+00
  2.4000E+01   6.0000E-01
  9.6000E+01   4.0000E-01
  7.2000E+02   4.0000E-01
Location 2:
EAB
  6
  1
  2
  0.0000E+00   1.8100E-04
  7.2000E+02   1.8100E-04
  1
  4
  0.0000E+00   3.5000E-04
  8.0000E+00   3.5000E-04
  2.4000E+01   3.5000E-04
  7.2000E+02   3.5000E-04
  0
Location 3:
LPZ
  6
  1
  5
  0.0000E+00   4.9500E-05
  8.0000E+00   3.6900E-05
  2.4000E+01   1.9500E-05
```

```
   9.6000E+01   7.8100E-06
   7.2000E+02   7.8100E-06
   1
   4
   0.0000E+00   3.5000E-04
   8.0000E+00   1.8000E-04
   2.4000E+01   2.3000E-04
   7.2000E+02   2.3000E-04
   0
Effective Volume Location:
   1
   6
   0.0000E+00   6.9500E-04
   2.0000E+00   3.3600E-04
   8.0000E+00   1.2800E-04
   2.4000E+01   9.7200E-05
   9.6000E+01   7.6900E-05

   7.2000E+02   7.6900E-05
Simulation Parameters:
   6
   0.0000E+00   5.0000E-02
   4.0000E+00   5.0000E-01
   8.0000E+00   1.0000E+00
   2.4000E+01   2.0000E+00
   4.8000E+01   2.4000E+01
   7.2000E+02   0.0000E+00
Output Filename:
C:\Program Files\radtrad303\ENW\Columbia AST_5u.o0
   1
   1
   1
   1
   1
End of Scenario File
```

Columbia_1f.o0

Cumulative Dose Summary

	CR		EAB		LPZ	
Time (hr)	Thyroid (rem)	TEDE (rem)	Thyroid (rem)	TEDE (rem)	Thyroid (rem)	TEDE (rem)
0.000	0.0000E+00	0.0000E+00	0.0000E+00	0.0000E+00	0.0000E+00	0.0000E+00
0.033	0.0000E+00	0.0000E+00	0.0000E+00	0.0000E+00	0.0000E+00	0.0000E+00
0.250	8.7868E-04	3.8394E-05	9.1999E-01	4.3656E-02	2.5160E-01	1.1939E-02
0.333	2.2116E-03	9.6719E-05	1.5845E+00	7.5166E-02	4.3333E-01	2.0556E-02
0.533	8.0154E-03	3.5538E-04	2.9966E+00	1.4265E-01	8.1952E-01	3.9013E-02
0.800	2.1312E-02	1.0060E-03	5.2981E+00	2.7860E-01	1.4489E+00	7.6192E-02
1.050	4.1041E-02	2.1533E-03	7.9172E+00	4.5445E-01	2.1652E+00	1.2428E-01
1.300	6.8128E-02	3.9434E-03	1.0624E+01	6.4467E-01	2.9055E+00	1.7630E-01
1.550	1.0232E-01	6.4278E-03	1.3347E+01	8.4213E-01	3.6502E+00	2.3031E-01
1.800	1.4325E-01	9.6322E-03	1.6071E+01	1.0448E+00	4.3951E+00	2.8573E-01
2.033	1.8717E-01	1.3275E-02	1.8611E+01	1.2378E+00	5.0897E+00	3.3851E-01
2.033	1.8718E-01	1.3275E-02	1.8611E+01	1.2378E+00	5.0898E+00	3.3851E-01
2.350	2.4861E-01	1.8473E-02	1.9936E+01	1.3490E+00	5.4520E+00	3.6892E-01
2.440	2.6553E-01	1.9908E-02	2.0109E+01	1.3674E+00	5.4995E+00	3.7397E-01
2.700	3.1277E-01	2.3935E-02	2.0530E+01	1.4146E+00	5.6145E+00	3.8688E-01
2.950	3.5600E-01	2.7644E-02	2.0899E+01	1.4567E+00	5.7156E+00	3.9837E-01
3.200	3.9717E-01	3.1198E-02	2.1238E+01	1.4957E+00	5.8082E+00	4.0904E-01
3.450	4.3636E-01	3.4599E-02	2.1549E+01	1.5319E+00	5.8932E+00	4.1894E-01
3.700	4.7366E-01	3.7855E-02	2.1834E+01	1.5655E+00	5.9711E+00	4.2814E-01
3.950	5.0915E-01	4.0969E-02	2.2095E+01	1.5969E+00	6.0427E+00	4.3671E-01
4.300	5.5597E-01	4.5110E-02	2.2427E+01	1.6372E+00	6.1333E+00	4.4775E-01
4.600	5.9357E-01	4.8458E-02	2.2681E+01	1.6688E+00	6.2029E+00	4.5639E-01
4.900	6.2897E-01	5.1629E-02	2.2912E+01	1.6979E+00	6.2660E+00	4.6435E-01
5.200	6.6231E-01	5.4631E-02	2.3121E+01	1.7248E+00	6.3231E+00	4.7169E-01
5.500	6.9368E-01	5.7474E-02	2.3311E+01	1.7496E+00	6.3751E+00	4.7847E-01
5.800	7.2322E-01	6.0164E-02	2.3484E+01	1.7725E+00	6.4223E+00	4.8474E-01
6.100	7.5102E-01	6.2712E-02	2.3641E+01	1.7937E+00	6.4653E+00	4.9056E-01
6.400	7.7720E-01	6.5123E-02	2.3784E+01	1.8135E+00	6.5046E+00	4.9595E-01
6.700	8.0184E-01	6.7406E-02	2.3916E+01	1.8318E+00	6.5405E+00	5.0096E-01
7.000	8.2504E-01	6.9568E-02	2.4036E+01	1.8488E+00	6.5734E+00	5.0562E-01
7.300	8.4689E-01	7.1616E-02	2.4146E+01	1.8647E+00	6.6036E+00	5.0997E-01
7.600	8.6747E-01	7.3555E-02	2.4248E+01	1.8796E+00	6.6313E+00	5.1403E-01
7.900	8.8686E-01	7.5394E-02	2.4342E+01	1.8935E+00	6.6570E+00	5.1783E-01
8.000	8.9307E-01	7.5985E-02	2.4371E+01	1.8979E+00	6.6651E+00	5.1904E-01
8.300	9.1093E-01	7.7679E-02	2.4456E+01	1.9106E+00	6.6739E+00	5.2121E-01
8.600	9.2763E-01	7.9255E-02	2.4534E+01	1.9226E+00	6.6821E+00	5.2325E-01
8.900	9.4326E-01	8.0721E-02	2.4607E+01	1.9338E+00	6.6898E+00	5.2519E-01
9.200	9.5789E-01	8.2087E-02	2.4675E+01	1.9444E+00	6.6969E+00	5.2702E-01
9.500	9.7159E-01	8.3361E-02	2.4738E+01	1.9544E+00	6.7035E+00	5.2875E-01
9.800	9.8443E-01	8.4551E-02	2.4798E+01	1.9639E+00	6.7098E+00	5.3040E-01
10.100	9.9646E-01	8.5663E-02	2.4854E+01	1.9729E+00	6.7157E+00	5.3196E-01
10.400	1.0077E+00	8.6704E-02	2.4907E+01	1.9813E+00	6.7212E+00	5.3345E-01
24.000	1.1919E+00	1.0464E-01	2.6264E+01	2.1788E+00	6.8635E+00	5.6887E-01
96.000	1.2540E+00	1.1067E-01	2.8557E+01	2.3905E+00	7.0258E+00	5.8906E-01
720.000	1.3474E+00	1.1749E-01	3.4813E+01	2.8318E+00	7.2032E+00	6.0521E-01

Columbia_1u.o0

Cumulative Dose Summary

Time (hr)	CR Thyroid (rem)	CR TEDE (rem)	EAB Thyroid (rem)	EAB TEDE (rem)	LPZ Thyroid (rem)	LPZ TEDE (rem)
0.000	0.0000E+00	0.0000E+00	0.0000E+00	0.0000E+00	0.0000E+00	0.0000E+00
0.033	0.0000E+00	0.0000E+00	0.0000E+00	0.0000E+00	0.0000E+00	0.0000E+00
0.250	2.4455E-02	1.0389E-03	9.1999E-01	4.3656E-02	2.5160E-01	1.1939E-02
0.333	6.1543E-02	2.6142E-03	1.5845E+00	7.5166E-02	4.3333E-01	2.0556E-02
0.533	2.2277E-01	9.4614E-03	2.9966E+00	1.4265E-01	8.1952E-01	3.9013E-02
0.800	5.9133E-01	2.5867E-02	5.2981E+00	2.7860E-01	1.4489E+00	7.6192E-02
1.050	1.1375E+00	5.2751E-02	7.9172E+00	4.5445E-01	2.1652E+00	1.2428E-01
1.300	1.8860E+00	9.1826E-02	1.0624E+01	6.4467E-01	2.9055E+00	1.7630E-01
1.550	2.8281E+00	1.4271E-01	1.3347E+01	8.4213E-01	3.6502E+00	2.3031E-01
1.800	3.9526E+00	2.0478E-01	1.6071E+01	1.0448E+00	4.3951E+00	2.8573E-01
2.033	5.1553E+00	2.7214E-01	1.8611E+01	1.2378E+00	5.0897E+00	3.3851E-01
2.033	5.1554E+00	2.7215E-01	1.8611E+01	1.2378E+00	5.0898E+00	3.3851E-01
2.350	6.8343E+00	3.6680E-01	1.9936E+01	1.3490E+00	5.4520E+00	3.6892E-01
2.440	7.2958E+00	3.9286E-01	2.0109E+01	1.3674E+00	5.4995E+00	3.7397E-01
2.700	8.5835E+00	4.6566E-01	2.0530E+01	1.4146E+00	5.6145E+00	3.8688E-01
2.950	9.7593E+00	5.3223E-01	2.0899E+01	1.4567E+00	5.7156E+00	3.9837E-01
3.200	1.0876E+01	5.9558E-01	2.1238E+01	1.4957E+00	5.8082E+00	4.0904E-01
3.450	1.1938E+01	6.5585E-01	2.1549E+01	1.5319E+00	5.8932E+00	4.1894E-01
3.700	1.2945E+01	7.1315E-01	2.1834E+01	1.5655E+00	5.9711E+00	4.2814E-01
3.950	1.3902E+01	7.6761E-01	2.2095E+01	1.5969E+00	6.0427E+00	4.3671E-01
4.300	1.5159E+01	8.3935E-01	2.2427E+01	1.6372E+00	6.1333E+00	4.4775E-01
4.600	1.6166E+01	8.9685E-01	2.2681E+01	1.6688E+00	6.2029E+00	4.5639E-01
4.900	1.7110E+01	9.5087E-01	2.2912E+01	1.6979E+00	6.2660E+00	4.6435E-01
5.200	1.7996E+01	1.0016E+00	2.3121E+01	1.7248E+00	6.3231E+00	4.7169E-01
5.500	1.8826E+01	1.0493E+00	2.3311E+01	1.7496E+00	6.3751E+00	4.7847E-01
5.800	1.9605E+01	1.0940E+00	2.3484E+01	1.7725E+00	6.4223E+00	4.8474E-01
6.100	2.0334E+01	1.1359E+00	2.3641E+01	1.7937E+00	6.4653E+00	4.9056E-01
6.400	2.1017E+01	1.1753E+00	2.3784E+01	1.8135E+00	6.5046E+00	4.9595E-01
6.700	2.1657E+01	1.2122E+00	2.3916E+01	1.8318E+00	6.5405E+00	5.0096E-01
7.000	2.2257E+01	1.2467E+00	2.4036E+01	1.8488E+00	6.5734E+00	5.0562E-01
7.300	2.2818E+01	1.2791E+00	2.4146E+01	1.8647E+00	6.6036E+00	5.0997E-01
7.600	2.3343E+01	1.3095E+00	2.4248E+01	1.8796E+00	6.6313E+00	5.1403E-01
7.900	2.3835E+01	1.3380E+00	2.4342E+01	1.8935E+00	6.6570E+00	5.1783E-01
8.000	2.3992E+01	1.3471E+00	2.4371E+01	1.8979E+00	6.6651E+00	5.1904E-01
8.300	2.4441E+01	1.3731E+00	2.4456E+01	1.9106E+00	6.6739E+00	5.2121E-01
8.600	2.4860E+01	1.3974E+00	2.4534E+01	1.9226E+00	6.6821E+00	5.2325E-01
8.900	2.5250E+01	1.4200E+00	2.4607E+01	1.9338E+00	6.6898E+00	5.2519E-01
9.200	2.5614E+01	1.4411E+00	2.4675E+01	1.9444E+00	6.6969E+00	5.2702E-01
9.500	2.5953E+01	1.4608E+00	2.4738E+01	1.9544E+00	6.7035E+00	5.2875E-01
9.800	2.6269E+01	1.4792E+00	2.4798E+01	1.9639E+00	6.7098E+00	5.3040E-01
10.100	2.6564E+01	1.4963E+00	2.4854E+01	1.9729E+00	6.7157E+00	5.3196E-01
10.400	2.6839E+01	1.5123E+00	2.4907E+01	1.9813E+00	6.7212E+00	5.3345E-01
24.000	3.0623E+01	1.7295E+00	2.6264E+01	2.1788E+00	6.8635E+00	5.6887E-01
96.000	3.1097E+01	1.7479E+00	2.8557E+01	2.3905E+00	7.0258E+00	5.8906E-01
720.000	3.1724E+01	1.7689E+00	3.4813E+01	2.8318E+00	7.2032E+00	6.0521E-01

Columbia_2f.o0

Cumulative Dose Summary

	CR		EAB		LPZ	
Time (hr)	Thyroid (rem)	TEDE (rem)	Thyroid (rem)	TEDE (rem)	Thyroid (rem)	TEDE (rem)
0.000	0.0000E+00	0.0000E+00	0.0000E+00	0.0000E+00	0.0000E+00	0.0000E+00
0.033	0.0000E+00	0.0000E+00	0.0000E+00	0.0000E+00	0.0000E+00	0.0000E+00
0.250	5.3523E-04	2.7391E-05	3.5096E-01	1.7563E-02	9.5980E-02	4.8031E-03
0.333	1.3482E-03	6.9265E-05	6.0513E-01	3.0525E-02	1.6549E-01	8.3480E-03
0.533	4.9175E-03	2.6711E-04	1.1505E+00	6.0562E-02	3.1464E-01	1.6563E-02
0.800	1.3207E-02	8.3937E-04	2.0443E+00	1.2981E-01	5.5909E-01	3.5501E-02
1.050	2.5642E-02	2.0354E-03	3.0692E+00	2.3378E-01	8.3938E-01	6.3935E-02
1.300	4.2940E-02	4.1560E-03	4.1422E+00	3.6193E-01	1.1328E+00	9.8982E-02
1.550	6.5100E-02	7.3918E-03	5.2365E+00	5.0948E-01	1.4321E+00	1.3933E-01
1.800	9.2058E-02	1.1874E-02	6.3463E+00	6.7364E-01	1.7356E+00	1.8423E-01
2.033	1.2144E-01	1.7247E-02	7.3949E+00	8.3985E-01	2.0224E+00	2.2968E-01
2.033	1.2144E-01	1.7247E-02	7.3950E+00	8.3987E-01	2.0224E+00	2.2969E-01
2.350	1.6296E-01	2.5040E-02	7.9753E+00	9.6060E-01	2.1811E+00	2.6271E-01
2.440	1.7446E-01	2.7199E-02	8.0638E+00	9.8877E-01	2.2053E+00	2.7041E-01
2.700	2.0677E-01	3.3289E-02	8.2885E+00	1.0656E+00	2.2667E+00	2.9142E-01
2.950	2.3662E-01	3.8939E-02	8.4914E+00	1.1351E+00	2.3222E+00	3.1042E-01
3.200	2.6531E-01	4.4389E-02	8.6825E+00	1.2005E+00	2.3745E+00	3.2831E-01
3.450	2.9289E-01	4.9642E-02	8.8629E+00	1.2621E+00	2.4238E+00	3.4517E-01
3.700	3.1940E-01	5.4702E-02	9.0334E+00	1.3204E+00	2.4705E+00	3.6109E-01
3.950	3.4491E-01	5.9575E-02	9.1950E+00	1.3754E+00	2.5146E+00	3.7613E-01
4.300	3.7900E-01	6.6115E-02	9.4076E+00	1.4477E+00	2.5728E+00	3.9591E-01
4.600	4.0679E-01	7.1449E-02	9.5786E+00	1.5055E+00	2.6196E+00	4.1171E-01
4.900	4.3334E-01	7.6540E-02	9.7403E+00	1.5596E+00	2.6638E+00	4.2653E-01
5.200	4.5872E-01	8.1398E-02	9.8936E+00	1.6106E+00	2.7057E+00	4.4046E-01
5.500	4.8299E-01	8.6033E-02	1.0039E+01	1.6584E+00	2.7456E+00	4.5355E-01
5.800	5.0621E-01	9.0457E-02	1.0179E+01	1.7035E+00	2.7836E+00	4.6589E-01
6.100	5.2844E-01	9.4680E-02	1.0312E+01	1.7461E+00	2.8200E+00	4.7752E-01
6.400	5.4975E-01	9.8711E-02	1.0439E+01	1.7862E+00	2.8549E+00	4.8850E-01
6.700	5.7017E-01	1.0256E-01	1.0562E+01	1.8242E+00	2.8885E+00	4.9889E-01
7.000	5.8978E-01	1.0624E-01	1.0680E+01	1.8602E+00	2.9208E+00	5.0873E-01
7.300	6.0860E-01	1.0975E-01	1.0795E+01	1.8943E+00	2.9521E+00	5.1805E-01
7.600	6.2670E-01	1.1311E-01	1.0905E+01	1.9267E+00	2.9824E+00	5.2690E-01
7.900	6.4411E-01	1.1633E-01	1.1013E+01	1.9574E+00	3.0118E+00	5.3532E-01
8.000	6.4977E-01	1.1737E-01	1.1048E+01	1.9673E+00	3.0215E+00	5.3803E-01
8.300	6.6618E-01	1.2035E-01	1.1152E+01	1.9962E+00	3.0323E+00	5.4353E-01
8.600	6.8171E-01	1.2312E-01	1.1253E+01	2.0236E+00	3.0429E+00	5.4877E-01
8.900	6.9643E-01	1.2569E-01	1.1352E+01	2.0498E+00	3.0533E+00	5.5377E-01
9.200	7.1039E-01	1.2809E-01	1.1449E+01	2.0749E+00	3.0635E+00	5.5854E-01
9.500	7.2365E-01	1.3033E-01	1.1544E+01	2.0989E+00	3.0734E+00	5.6311E-01
9.800	7.3624E-01	1.3242E-01	1.1637E+01	2.1218E+00	3.0832E+00	5.6747E-01
10.100	7.4822E-01	1.3438E-01	1.1729E+01	2.1438E+00	3.0928E+00	5.7165E-01
10.400	7.5963E-01	1.3622E-01	1.1819E+01	2.1650E+00	3.1023E+00	5.7566E-01
24.000	1.0249E+00	1.7338E-01	1.5313E+01	2.7213E+00	3.4687E+00	6.7817E-01
96.000	1.2048E+00	1.9109E-01	2.2157E+01	3.3542E+00	3.9531E+00	7.3862E-01
720.000	1.4847E+00	2.1152E-01	4.0830E+01	4.6624E+00	4.4826E+00	7.8663E-01

Columbia_2u.o0

Cumulative Dose Summary

	CR		EAB		LPZ	
Time (hr)	Thyroid (rem)	TEDE (rem)	Thyroid (rem)	TEDE (rem)	Thyroid (rem)	TEDE (rem)
0.000	0.0000E+00	0.0000E+00	0.0000E+00	0.0000E+00	0.0000E+00	0.0000E+00
0.033	0.0000E+00	0.0000E+00	0.0000E+00	0.0000E+00	0.0000E+00	0.0000E+00
0.250	9.3291E-03	3.7993E-04	3.5096E-01	1.7563E-02	9.5980E-02	4.8031E-03
0.333	2.3485E-02	9.5631E-04	6.0513E-01	3.0525E-02	1.6549E-01	8.3480E-03
0.533	8.5238E-02	3.4725E-03	1.1505E+00	6.0562E-02	3.1464E-01	1.6563E-02
0.800	2.2721E-01	9.5147E-03	2.0443E+00	1.2981E-01	5.5909E-01	3.5501E-02
1.050	4.3857E-01	1.9390E-02	3.0692E+00	2.3378E-01	8.3938E-01	6.3935E-02
1.300	7.2980E-01	3.3799E-02	4.1422E+00	3.6193E-01	1.1328E+00	9.8982E-02
1.550	1.0988E+00	5.2697E-02	5.2365E+00	5.0948E-01	1.4321E+00	1.3933E-01
1.800	1.5423E+00	7.5939E-02	6.3463E+00	6.7364E-01	1.7356E+00	1.8423E-01
2.033	2.0200E+00	1.0137E-01	7.3949E+00	8.3985E-01	2.0224E+00	2.2968E-01
2.033	2.0201E+00	1.0137E-01	7.3950E+00	8.3987E-01	2.0224E+00	2.2969E-01
2.350	2.6901E+00	1.3724E-01	7.9753E+00	9.6060E-01	2.1811E+00	2.6271E-01
2.440	2.8748E+00	1.4713E-01	8.0638E+00	9.8877E-01	2.2053E+00	2.7041E-01
2.700	3.3915E+00	1.7481E-01	8.2885E+00	1.0656E+00	2.2667E+00	2.9142E-01
2.950	3.8654E+00	2.0021E-01	8.4914E+00	1.1351E+00	2.3222E+00	3.1042E-01
3.200	4.3178E+00	2.2445E-01	8.6825E+00	1.2005E+00	2.3745E+00	3.2831E-01
3.450	4.7494E+00	2.4759E-01	8.8629E+00	1.2621E+00	2.4238E+00	3.4517E-01
3.700	5.1613E+00	2.6966E-01	9.0334E+00	1.3204E+00	2.4705E+00	3.6109E-01
3.950	5.5543E+00	2.9071E-01	9.1950E+00	1.3754E+00	2.5146E+00	3.7613E-01
4.300	6.0745E+00	3.1857E-01	9.4076E+00	1.4477E+00	2.5728E+00	3.9591E-01
4.600	6.4940E+00	3.4101E-01	9.5786E+00	1.5055E+00	2.6196E+00	4.1171E-01
4.900	6.8904E+00	3.6220E-01	9.7403E+00	1.5596E+00	2.6638E+00	4.2653E-01
5.200	7.2651E+00	3.8221E-01	9.8936E+00	1.6106E+00	2.7057E+00	4.4046E-01
5.500	7.6193E+00	4.0110E-01	1.0039E+01	1.6584E+00	2.7456E+00	4.5355E-01
5.800	7.9542E+00	4.1893E-01	1.0179E+01	1.7035E+00	2.7836E+00	4.6589E-01
6.100	8.2709E+00	4.3576E-01	1.0312E+01	1.7461E+00	2.8200E+00	4.7752E-01
6.400	8.5706E+00	4.5165E-01	1.0439E+01	1.7862E+00	2.8549E+00	4.8850E-01
6.700	8.8541E+00	4.6665E-01	1.0562E+01	1.8242E+00	2.8885E+00	4.9889E-01
7.000	9.1225E+00	4.8081E-01	1.0680E+01	1.8602E+00	2.9208E+00	5.0873E-01
7.300	9.3768E+00	4.9419E-01	1.0795E+01	1.8943E+00	2.9521E+00	5.1805E-01
7.600	9.6176E+00	5.0683E-01	1.0905E+01	1.9267E+00	2.9824E+00	5.2690E-01
7.900	9.8460E+00	5.1878E-01	1.1013E+01	1.9574E+00	3.0118E+00	5.3532E-01
8.000	9.9195E+00	5.2261E-01	1.1048E+01	1.9673E+00	3.0215E+00	5.3803E-01
8.300	1.0131E+01	5.3364E-01	1.1152E+01	1.9962E+00	3.0323E+00	5.4353E-01
8.600	1.0330E+01	5.4396E-01	1.1253E+01	2.0236E+00	3.0429E+00	5.4877E-01
8.900	1.0517E+01	5.5362E-01	1.1352E+01	2.0498E+00	3.0533E+00	5.5377E-01
9.200	1.0692E+01	5.6268E-01	1.1449E+01	2.0749E+00	3.0635E+00	5.5854E-01
9.500	1.0857E+01	5.7116E-01	1.1544E+01	2.0989E+00	3.0734E+00	5.6311E-01
9.800	1.1013E+01	5.7912E-01	1.1637E+01	2.1218E+00	3.0832E+00	5.6747E-01
10.100	1.1159E+01	5.8659E-01	1.1729E+01	2.1438E+00	3.0928E+00	5.7165E-01
10.400	1.1297E+01	5.9361E-01	1.1819E+01	2.1650E+00	3.1023E+00	5.7566E-01
24.000	1.3858E+01	7.1223E-01	1.5313E+01	2.7213E+00	3.4687E+00	6.7817E-01
96.000	1.5077E+01	7.5442E-01	2.2157E+01	3.3542E+00	3.9531E+00	7.3862E-01
720.000	1.6947E+01	8.1550E-01	4.0830E+01	4.6624E+00	4.4826E+00	7.8663E-01

Columbia_3f.o0

Cumulative Dose Summary

Time (hr)	CR Thyroid (rem)	CR TEDE (rem)	EAB Thyroid (rem)	EAB TEDE (rem)	LPZ Thyroid (rem)	LPZ TEDE (rem)
0.000	0.0000E+00	0.0000E+00	0.0000E+00	0.0000E+00	0.0000E+00	0.0000E+00
0.033	0.0000E+00	0.0000E+00	0.0000E+00	0.0000E+00	0.0000E+00	0.0000E+00
0.250	1.5327E-03	6.6969E-05	5.0133E+00	2.3789E-01	1.3710E+00	6.5059E-02
0.333	3.8577E-03	1.6870E-04	8.6344E+00	4.0960E-01	2.3614E+00	1.1202E-01
0.533	1.0972E-02	4.8089E-04	9.2075E+00	4.3698E-01	2.5181E+00	1.1951E-01
0.800	2.0679E-02	9.1327E-04	1.0141E+01	4.9215E-01	2.7735E+00	1.3459E-01
1.050	3.0246E-02	1.3663E-03	1.1204E+01	5.6351E-01	3.0641E+00	1.5411E-01
1.300	4.0339E-02	1.8829E-03	1.2303E+01	6.4070E-01	3.3646E+00	1.7522E-01
1.550	5.0949E-02	2.4712E-03	1.3408E+01	7.2083E-01	3.6667E+00	1.9713E-01
1.800	6.2057E-02	3.1359E-03	1.4513E+01	8.0307E-01	3.9690E+00	2.1962E-01
2.033	7.2848E-02	3.8270E-03	1.5544E+01	8.8138E-01	4.2509E+00	2.4104E-01
2.033	7.2850E-02	3.8271E-03	1.5544E+01	8.8139E-01	4.2509E+00	2.4104E-01
2.350	8.7704E-02	4.8339E-03	1.6454E+01	9.5759E-01	4.4998E+00	2.6188E-01
2.440	9.1849E-02	5.1250E-03	1.6578E+01	9.7060E-01	4.5336E+00	2.6544E-01
2.700	1.0351E-01	5.9673E-03	1.6871E+01	1.0035E+00	4.6138E+00	2.7444E-01
2.950	1.1427E-01	6.7748E-03	1.7129E+01	1.0328E+00	4.6843E+00	2.8245E-01
3.200	1.2461E-01	7.5758E-03	1.7365E+01	1.0599E+00	4.7489E+00	2.8987E-01
3.450	1.3454E-01	8.3668E-03	1.7581E+01	1.0852E+00	4.8082E+00	2.9677E-01
3.700	1.4406E-01	9.1451E-03	1.7780E+01	1.1086E+00	4.8625E+00	3.0318E-01
3.950	1.5319E-01	9.9086E-03	1.7963E+01	1.1304E+00	4.9124E+00	3.0915E-01
4.300	1.6534E-01	1.0952E-02	1.8194E+01	1.1585E+00	4.9756E+00	3.1683E-01
4.600	1.7519E-01	1.1818E-02	1.8371E+01	1.1805E+00	5.0241E+00	3.2285E-01
4.900	1.8453E-01	1.2656E-02	1.8532E+01	1.2008E+00	5.0681E+00	3.2840E-01
5.200	1.9340E-01	1.3465E-02	1.8678E+01	1.2195E+00	5.1080E+00	3.3351E-01
5.500	2.0181E-01	1.4245E-02	1.8810E+01	1.2368E+00	5.1442E+00	3.3823E-01
5.800	2.0979E-01	1.4996E-02	1.8930E+01	1.2527E+00	5.1771E+00	3.4260E-01
6.100	2.1735E-01	1.5718E-02	1.9040E+01	1.2675E+00	5.2071E+00	3.4664E-01
6.400	2.2452E-01	1.6411E-02	1.9140E+01	1.2813E+00	5.2345E+00	3.5040E-01
6.700	2.3132E-01	1.7076E-02	1.9232E+01	1.2940E+00	5.2595E+00	3.5389E-01
7.000	2.3776E-01	1.7714E-02	1.9315E+01	1.3059E+00	5.2824E+00	3.5713E-01
7.300	2.4387E-01	1.8325E-02	1.9392E+01	1.3170E+00	5.3034E+00	3.6016E-01
7.600	2.4966E-01	1.8909E-02	1.9463E+01	1.3273E+00	5.3228E+00	3.6299E-01
7.900	2.5515E-01	1.9469E-02	1.9528E+01	1.3370E+00	5.3407E+00	3.6563E-01
8.000	2.5692E-01	1.9651E-02	1.9549E+01	1.3400E+00	5.3463E+00	3.6648E-01
8.300	2.6201E-01	2.0171E-02	1.9608E+01	1.3489E+00	5.3525E+00	3.6799E-01
8.600	2.6677E-01	2.0652E-02	1.9662E+01	1.3572E+00	5.3582E+00	3.6941E-01
8.900	2.7123E-01	2.1099E-02	1.9713E+01	1.3651E+00	5.3635E+00	3.7075E-01
9.200	2.7541E-01	2.1515E-02	1.9761E+01	1.3724E+00	5.3685E+00	3.7203E-01
9.500	2.7933E-01	2.1902E-02	1.9805E+01	1.3794E+00	5.3731E+00	3.7323E-01
9.800	2.8301E-01	2.2262E-02	1.9846E+01	1.3860E+00	5.3775E+00	3.7438E-01
10.100	2.8646E-01	2.2599E-02	1.9885E+01	1.3922E+00	5.3816E+00	3.7547E-01
10.400	2.8969E-01	2.2913E-02	1.9922E+01	1.3981E+00	5.3854E+00	3.7650E-01
24.000	3.4378E-01	2.8341E-02	2.0867E+01	1.5355E+00	5.4844E+00	4.0115E-01
96.000	3.6467E-01	3.0368E-02	2.2457E+01	1.6824E+00	5.5970E+00	4.1515E-01
720.000	3.9350E-01	3.2475E-02	2.6797E+01	1.9885E+00	5.7201E+00	4.2635E-01

Columbia_3u.o0

Cumulative Dose Summary

	CR		EAB		LPZ	
Time (hr)	Thyroid (rem)	TEDE (rem)	Thyroid (rem)	TEDE (rem)	Thyroid (rem)	TEDE (rem)
0.000	0.0000E+00	0.0000E+00	0.0000E+00	0.0000E+00	0.0000E+00	0.0000E+00
0.033	0.0000E+00	0.0000E+00	0.0000E+00	0.0000E+00	0.0000E+00	0.0000E+00
0.250	1.9904E-02	8.4557E-04	5.0133E+00	2.3789E-01	1.3710E+00	6.5059E-02
0.333	5.0091E-02	2.1277E-03	8.6344E+00	4.0960E-01	2.3614E+00	1.1202E-01
0.533	1.4243E-01	6.0488E-03	9.2075E+00	4.3698E-01	2.5181E+00	1.1951E-01
0.800	2.6834E-01	1.1440E-02	1.0141E+01	4.9215E-01	2.7735E+00	1.3459E-01
1.050	3.9237E-01	1.6928E-02	1.1204E+01	5.6351E-01	3.0641E+00	1.5411E-01
1.300	5.2306E-01	2.2918E-02	1.2303E+01	6.4070E-01	3.3646E+00	1.7522E-01
1.550	6.6025E-01	2.9400E-02	1.3408E+01	7.2083E-01	3.6667E+00	1.9713E-01
1.800	8.0357E-01	3.6352E-02	1.4513E+01	8.0307E-01	3.9690E+00	2.1962E-01
2.033	9.4245E-01	4.3236E-02	1.5544E+01	8.8138E-01	4.2509E+00	2.4104E-01
2.033	9.4247E-01	4.3237E-02	1.5544E+01	8.8139E-01	4.2509E+00	2.4104E-01
2.350	1.1296E+00	5.2630E-02	1.6454E+01	9.5759E-01	4.4998E+00	2.6188E-01
2.440	1.1811E+00	5.5224E-02	1.6578E+01	9.7060E-01	4.5336E+00	2.6544E-01
2.700	1.3247E+00	6.2476E-02	1.6871E+01	1.0035E+00	4.6138E+00	2.7444E-01
2.950	1.4558E+00	6.9117E-02	1.7129E+01	1.0328E+00	4.6843E+00	2.8245E-01
3.200	1.5803E+00	7.5445E-02	1.7365E+01	1.0599E+00	4.7489E+00	2.8987E-01
3.450	1.6986E+00	8.1472E-02	1.7581E+01	1.0852E+00	4.8082E+00	2.9677E-01
3.700	1.8110E+00	8.7209E-02	1.7780E+01	1.1086E+00	4.8625E+00	3.0318E-01
3.950	1.9176E+00	9.2669E-02	1.7963E+01	1.1304E+00	4.9124E+00	3.0915E-01
4.300	2.0578E+00	9.9868E-02	1.8194E+01	1.1585E+00	4.9756E+00	3.1683E-01
4.600	2.1700E+00	1.0565E-01	1.8371E+01	1.1805E+00	5.0241E+00	3.2285E-01
4.900	2.2753E+00	1.1108E-01	1.8532E+01	1.2008E+00	5.0681E+00	3.2840E-01
5.200	2.3740E+00	1.1619E-01	1.8678E+01	1.2195E+00	5.1080E+00	3.3351E-01
5.500	2.4665E+00	1.2099E-01	1.8810E+01	1.2368E+00	5.1442E+00	3.3823E-01
5.800	2.5533E+00	1.2550E-01	1.8930E+01	1.2527E+00	5.1771E+00	3.4260E-01
6.100	2.6346E+00	1.2974E-01	1.9040E+01	1.2675E+00	5.2071E+00	3.4664E-01
6.400	2.7107E+00	1.3372E-01	1.9140E+01	1.2813E+00	5.2345E+00	3.5040E-01
6.700	2.7820E+00	1.3745E-01	1.9232E+01	1.2940E+00	5.2595E+00	3.5389E-01
7.000	2.8488E+00	1.4095E-01	1.9315E+01	1.3059E+00	5.2824E+00	3.5713E-01
7.300	2.9114E+00	1.4423E-01	1.9392E+01	1.3170E+00	5.3034E+00	3.6016E-01
7.600	2.9699E+00	1.4731E-01	1.9463E+01	1.3273E+00	5.3228E+00	3.6299E-01
7.900	3.0247E+00	1.5020E-01	1.9528E+01	1.3370E+00	5.3407E+00	3.6563E-01
8.000	3.0422E+00	1.5112E-01	1.9549E+01	1.3400E+00	5.3463E+00	3.6648E-01
8.300	3.0922E+00	1.5376E-01	1.9608E+01	1.3489E+00	5.3525E+00	3.6799E-01
8.600	3.1388E+00	1.5622E-01	1.9662E+01	1.3572E+00	5.3582E+00	3.6941E-01
8.900	3.1822E+00	1.5851E-01	1.9713E+01	1.3651E+00	5.3635E+00	3.7075E-01
9.200	3.2226E+00	1.6065E-01	1.9761E+01	1.3724E+00	5.3685E+00	3.7203E-01
9.500	3.2602E+00	1.6264E-01	1.9805E+01	1.3794E+00	5.3731E+00	3.7323E-01
9.800	3.2953E+00	1.6450E-01	1.9846E+01	1.3860E+00	5.3775E+00	3.7438E-01
10.100	3.3279E+00	1.6623E-01	1.9885E+01	1.3922E+00	5.3816E+00	3.7547E-01
10.400	3.3583E+00	1.6784E-01	1.9922E+01	1.3981E+00	5.3854E+00	3.7650E-01
24.000	3.7694E+00	1.8954E-01	2.0867E+01	1.5355E+00	5.4844E+00	4.0115E-01
96.000	3.8137E+00	1.9125E-01	2.2457E+01	1.6824E+00	5.5970E+00	4.1515E-01
720.000	3.8647E+00	1.9295E-01	2.6797E+01	1.9885E+00	5.7201E+00	4.2635E-01

Columbia_4f.o0

Cumulative Dose Summary

	CR		EAB		LPZ	
Time (hr)	Thyroid (rem)	TEDE (rem)	Thyroid (rem)	TEDE (rem)	Thyroid (rem)	TEDE (rem)
0.000	0.0000E+00	0.0000E+00	0.0000E+00	0.0000E+00	0.0000E+00	0.0000E+00
0.033	0.0000E+00	0.0000E+00	0.0000E+00	0.0000E+00	0.0000E+00	0.0000E+00
0.250	0.0000E+00	0.0000E+00	0.0000E+00	0.0000E+00	0.0000E+00	0.0000E+00
0.333	0.0000E+00	0.0000E+00	0.0000E+00	0.0000E+00	0.0000E+00	0.0000E+00
0.533	2.6080E-05	8.2310E-06	1.3111E-01	1.4967E-02	3.5856E-02	4.0932E-03
0.800	1.5530E-04	6.8692E-05	3.5781E-01	6.3295E-02	9.7853E-02	1.7310E-02
1.050	3.9886E-04	2.5343E-04	6.2060E-01	1.5501E-01	1.6972E-01	4.2392E-02
1.300	7.6735E-04	6.3664E-04	8.9332E-01	2.8335E-01	2.4431E-01	7.7490E-02
1.550	1.2566E-03	1.2712E-03	1.1679E+00	4.4307E-01	3.1939E-01	1.2117E-01
1.800	1.8604E-03	2.1945E-03	1.4426E+00	6.3003E-01	3.9452E-01	1.7230E-01
2.033	2.5216E-03	3.3375E-03	1.6987E+00	8.2590E-01	4.6457E-01	2.2587E-01
2.033	2.5217E-03	3.3377E-03	1.6988E+00	8.2593E-01	4.6458E-01	2.2587E-01
2.350	3.5077E-03	5.2112E-03	1.9367E+00	1.0931E+00	5.2964E-01	2.9893E-01
2.440	3.7910E-03	5.7916E-03	1.9694E+00	1.1634E+00	5.3858E-01	3.1818E-01
2.700	4.5989E-03	7.5644E-03	2.0431E+00	1.3575E+00	5.5875E-01	3.7124E-01
2.950	5.3583E-03	9.3774E-03	2.1077E+00	1.5330E+00	5.7641E-01	4.1925E-01
3.200	6.0993E-03	1.1269E-02	2.1669E+00	1.6986E+00	5.9260E-01	4.6453E-01
3.450	6.8214E-03	1.3216E-02	2.2212E+00	1.8549E+00	6.0744E-01	5.0727E-01
3.700	7.5238E-03	1.5201E-02	2.2710E+00	2.0025E+00	6.2106E-01	5.4765E-01
3.950	8.2063E-03	1.7206E-02	2.3167E+00	2.1421E+00	6.3356E-01	5.8584E-01
4.300	9.1280E-03	2.0036E-02	2.3745E+00	2.3260E+00	6.4938E-01	6.3611E-01
4.600	9.8863E-03	2.2454E-02	2.4190E+00	2.4730E+00	6.6154E-01	6.7631E-01
4.900	1.0616E-02	2.4847E-02	2.4592E+00	2.6109E+00	6.7256E-01	7.1403E-01
5.200	1.1316E-02	2.7204E-02	2.4958E+00	2.7405E+00	6.8254E-01	7.4946E-01
5.500	1.1988E-02	2.9516E-02	2.5289E+00	2.8623E+00	6.9161E-01	7.8280E-01
5.800	1.2633E-02	3.1777E-02	2.5591E+00	2.9771E+00	6.9985E-01	8.1418E-01
6.100	1.3251E-02	3.3982E-02	2.5865E+00	3.0853E+00	7.0736E-01	8.4377E-01
6.400	1.3842E-02	3.6128E-02	2.6116E+00	3.1874E+00	7.1422E-01	8.7170E-01
6.700	1.4409E-02	3.8212E-02	2.6345E+00	3.2839E+00	7.2048E-01	8.9808E-01
7.000	1.4951E-02	4.0234E-02	2.6555E+00	3.3751E+00	7.2622E-01	9.2303E-01
7.300	1.5470E-02	4.2193E-02	2.6747E+00	3.4615E+00	7.3149E-01	9.4666E-01
7.600	1.5967E-02	4.4090E-02	2.6924E+00	3.5434E+00	7.3633E-01	9.6905E-01
7.900	1.6442E-02	4.5924E-02	2.7088E+00	3.6211E+00	7.4080E-01	9.9031E-01
8.000	1.6595E-02	4.6521E-02	2.7139E+00	3.6461E+00	7.4221E-01	9.9715E-01
8.300	1.7039E-02	4.8229E-02	2.7287E+00	3.7187E+00	7.4375E-01	1.0119E+00
8.600	1.7456E-02	4.9799E-02	2.7423E+00	3.7878E+00	7.4519E-01	1.0259E+00
8.900	1.7848E-02	5.1244E-02	2.7550E+00	3.8535E+00	7.4652E-01	1.0392E+00
9.200	1.8217E-02	5.2579E-02	2.7668E+00	3.9162E+00	7.4776E-01	1.0519E+00
9.500	1.8563E-02	5.3813E-02	2.7779E+00	3.9760E+00	7.4892E-01	1.0641E+00
9.800	1.8889E-02	5.4957E-02	2.7883E+00	4.0332E+00	7.5001E-01	1.0757E+00
10.100	1.9196E-02	5.6021E-02	2.7981E+00	4.0878E+00	7.5103E-01	1.0868E+00
10.400	1.9486E-02	5.7011E-02	2.8073E+00	4.1401E+00	7.5200E-01	1.0974E+00
24.000	2.4700E-02	7.5480E-02	3.0428E+00	5.4270E+00	7.7669E-01	1.3589E+00
96.000	2.7143E-02	8.3642E-02	3.4392E+00	6.6512E+00	8.0476E-01	1.4904E+00
720.000	3.0545E-02	9.0965E-02	4.5205E+00	8.7969E+00	8.3542E-01	1.5824E+00

Columbia_4u.o0

Cumulative Dose Summary

	CR		EAB		LPZ	
Time (hr)	Thyroid (rem)	TEDE (rem)	Thyroid (rem)	TEDE (rem)	Thyroid (rem)	TEDE (rem)
0.000	0.0000E+00	0.0000E+00	0.0000E+00	0.0000E+00	0.0000E+00	0.0000E+00
0.033	0.0000E+00	0.0000E+00	0.0000E+00	0.0000E+00	0.0000E+00	0.0000E+00
0.250	0.0000E+00	0.0000E+00	0.0000E+00	0.0000E+00	0.0000E+00	0.0000E+00
0.333	0.0000E+00	0.0000E+00	0.0000E+00	0.0000E+00	0.0000E+00	0.0000E+00
0.533	6.5826E-04	3.0099E-05	1.3111E-01	1.4967E-02	3.5856E-02	4.0932E-03
0.800	3.9144E-03	1.9422E-04	3.5781E-01	6.3295E-02	9.7853E-02	1.7310E-02
1.050	1.0050E-02	5.5797E-04	6.2060E-01	1.5501E-01	1.6972E-01	4.2392E-02
1.300	1.9316E-02	1.1653E-03	8.9332E-01	2.8335E-01	2.4431E-01	7.7490E-02
1.550	3.1585E-02	2.0265E-03	1.1679E+00	4.4307E-01	3.1939E-01	1.2117E-01
1.800	4.6683E-02	3.1434E-03	1.4426E+00	6.3003E-01	3.9452E-01	1.7230E-01
2.033	6.3153E-02	4.4125E-03	1.6987E+00	8.2590E-01	4.6457E-01	2.2587E-01
2.033	6.3156E-02	4.4127E-03	1.6988E+00	8.2593E-01	4.6458E-01	2.2587E-01
2.350	8.6914E-02	6.2855E-03	1.9367E+00	1.0931E+00	5.2964E-01	2.9893E-01
2.440	9.3593E-02	6.8197E-03	1.9694E+00	1.1634E+00	5.3858E-01	3.1818E-01
2.700	1.1241E-01	8.3467E-03	2.0431E+00	1.3575E+00	5.5875E-01	3.7124E-01
2.950	1.2980E-01	9.7870E-03	2.1077E+00	1.5330E+00	5.7641E-01	4.1925E-01
3.200	1.4653E-01	1.1196E-02	2.1669E+00	1.6986E+00	5.9260E-01	4.6453E-01
3.450	1.6259E-01	1.2570E-02	2.2212E+00	1.8549E+00	6.0744E-01	5.0727E-01
3.700	1.7800E-01	1.3908E-02	2.2710E+00	2.0025E+00	6.2106E-01	5.4765E-01
3.950	1.9277E-01	1.5208E-02	2.3167E+00	2.1421E+00	6.3356E-01	5.8584E-01
4.300	2.1240E-01	1.6964E-02	2.3745E+00	2.3260E+00	6.4938E-01	6.3611E-01
4.600	2.2830E-01	1.8407E-02	2.4190E+00	2.4730E+00	6.6154E-01	6.7631E-01
4.900	2.4336E-01	1.9791E-02	2.4592E+00	2.6109E+00	6.7256E-01	7.1403E-01
5.200	2.5761E-01	2.1118E-02	2.4958E+00	2.7405E+00	6.8254E-01	7.4946E-01
5.500	2.7109E-01	2.2387E-02	2.5289E+00	2.8623E+00	6.9161E-01	7.8280E-01
5.800	2.8384E-01	2.3599E-02	2.5591E+00	2.9771E+00	6.9985E-01	8.1418E-01
6.100	2.9588E-01	2.4757E-02	2.5865E+00	3.0853E+00	7.0736E-01	8.4377E-01
6.400	3.0724E-01	2.5861E-02	2.6116E+00	3.1874E+00	7.1422E-01	8.7170E-01
6.700	3.1796E-01	2.6913E-02	2.6345E+00	3.2839E+00	7.2048E-01	8.9808E-01
7.000	3.2807E-01	2.7916E-02	2.6555E+00	3.3751E+00	7.2622E-01	9.2303E-01
7.300	3.3760E-01	2.8871E-02	2.6747E+00	3.4615E+00	7.3149E-01	9.4666E-01
7.600	3.4658E-01	2.9779E-02	2.6924E+00	3.5434E+00	7.3633E-01	9.6905E-01
7.900	3.5505E-01	3.0644E-02	2.7088E+00	3.6211E+00	7.4080E-01	9.9031E-01
8.000	3.5776E-01	3.0923E-02	2.7139E+00	3.6461E+00	7.4221E-01	9.9715E-01
8.300	3.6553E-01	3.1721E-02	2.7287E+00	3.7187E+00	7.4375E-01	1.0119E+00
8.600	3.7278E-01	3.2460E-02	2.7423E+00	3.7878E+00	7.4519E-01	1.0259E+00
8.900	3.7955E-01	3.3146E-02	2.7550E+00	3.8535E+00	7.4652E-01	1.0392E+00
9.200	3.8587E-01	3.3782E-02	2.7668E+00	3.9162E+00	7.4776E-01	1.0519E+00
9.500	3.9176E-01	3.4373E-02	2.7779E+00	3.9760E+00	7.4892E-01	1.0641E+00
9.800	3.9726E-01	3.4922E-02	2.7883E+00	4.0332E+00	7.5001E-01	1.0757E+00
10.100	4.0240E-01	3.5434E-02	2.7981E+00	4.0878E+00	7.5103E-01	1.0868E+00
10.400	4.0719E-01	3.5910E-02	2.8073E+00	4.1401E+00	7.5200E-01	1.0974E+00
24.000	4.7458E-01	4.3340E-02	3.0428E+00	5.4270E+00	7.7669E-01	1.3589E+00
96.000	4.8430E-01	4.5112E-02	3.4392E+00	6.6512E+00	8.0476E-01	1.4904E+00
720.000	4.9516E-01	4.6600E-02	4.5205E+00	8.7969E+00	8.3542E-01	1.5824E+00

Columbia_5f.o0

Cumulative Dose Summary

Time (hr)	CR Thyroid (rem)	CR TEDE (rem)	EAB Thyroid (rem)	EAB TEDE (rem)	LPZ Thyroid (rem)	LPZ TEDE (rem)
0.000	0.0000E+00	0.0000E+00	0.0000E+00	0.0000E+00	0.0000E+00	0.0000E+00
0.033	0.0000E+00	0.0000E+00	0.0000E+00	0.0000E+00	0.0000E+00	0.0000E+00
0.250	0.0000E+00	0.0000E+00	0.0000E+00	0.0000E+00	0.0000E+00	0.0000E+00
0.333	5.9128E-05	1.8805E-06	1.8376E-01	6.5731E-03	5.0253E-02	1.7976E-03
0.533	3.8785E-04	1.2377E-05	2.0057E-01	7.2350E-03	5.4851E-02	1.9786E-03
0.800	8.6225E-04	2.7947E-05	2.4043E-01	9.0366E-03	6.5754E-02	2.4713E-03
1.050	1.3871E-03	4.6727E-05	3.0096E-01	1.2247E-02	8.2307E-02	3.3493E-03
1.300	2.0338E-03	7.2755E-05	3.8380E-01	1.7142E-02	1.0496E-01	4.6879E-03
1.550	2.8426E-03	1.0942E-04	4.8878E-01	2.3908E-02	1.3367E-01	6.5384E-03
1.800	3.8509E-03	1.6030E-04	6.1574E-01	3.2722E-02	1.6839E-01	8.9488E-03
2.033	5.0017E-03	2.2383E-04	7.5390E-01	4.2938E-02	2.0618E-01	1.1743E-02
2.033	5.0019E-03	2.2383E-04	7.5392E-01	4.2939E-02	2.0618E-01	1.1743E-02
2.350	6.8378E-03	3.3262E-04	9.5733E-01	5.8644E-02	2.6181E-01	1.6038E-02
2.440	7.4082E-03	3.6769E-04	1.0150E+00	6.3158E-02	2.7759E-01	1.7273E-02
2.700	9.1697E-03	4.7889E-04	1.1813E+00	7.6303E-02	3.2307E-01	2.0867E-02
2.950	1.1014E-02	5.9909E-04	1.3406E+00	8.9080E-02	3.6664E-01	2.4362E-02
3.200	1.2997E-02	7.3163E-04	1.4994E+00	1.0198E-01	4.1006E-01	2.7890E-02
3.450	1.5108E-02	8.7587E-04	1.6576E+00	1.1500E-01	4.5332E-01	3.1451E-02
3.700	1.7339E-02	1.0312E-03	1.8152E+00	1.2814E-01	4.9644E-01	3.5042E-02
3.950	1.9682E-02	1.1971E-03	1.9724E+00	1.4137E-01	5.3940E-01	3.8661E-02
4.300	2.3137E-02	1.4462E-03	2.1915E+00	1.6004E-01	5.9933E-01	4.3768E-02
4.600	2.6247E-02	1.6741E-03	2.3785E+00	1.7617E-01	6.5048E-01	4.8179E-02
4.900	2.9482E-02	1.9144E-03	2.5648E+00	1.9241E-01	7.0143E-01	5.2619E-02
5.200	3.2831E-02	2.1663E-03	2.7504E+00	2.0874E-01	7.5218E-01	5.7085E-02
5.500	3.6286E-02	2.4290E-03	2.9352E+00	2.2515E-01	8.0273E-01	6.1574E-02
5.800	3.9837E-02	2.7018E-03	3.1194E+00	2.4163E-01	8.5309E-01	6.6081E-02
6.100	4.3477E-02	2.9840E-03	3.3028E+00	2.5817E-01	9.0326E-01	7.0604E-02
6.400	4.7197E-02	3.2748E-03	3.4856E+00	2.7476E-01	9.5325E-01	7.5141E-02
6.700	5.0990E-02	3.5738E-03	3.6677E+00	2.9138E-01	1.0030E+00	7.9687E-02
7.000	5.4851E-02	3.8802E-03	3.8491E+00	3.0803E-01	1.0527E+00	8.4241E-02
7.300	5.8773E-02	4.1936E-03	4.0299E+00	3.2470E-01	1.1021E+00	8.8799E-02
7.600	6.2751E-02	4.5133E-03	4.2100E+00	3.4138E-01	1.1514E+00	9.3360E-02
7.900	6.6780E-02	4.8389E-03	4.3895E+00	3.5805E-01	1.2005E+00	9.7921E-02
8.000	6.8133E-02	4.9486E-03	4.4492E+00	3.6361E-01	1.2168E+00	9.9441E-02
8.300	7.2119E-02	5.2713E-03	4.6279E+00	3.8028E-01	1.2355E+00	1.0229E-01
8.600	7.5949E-02	5.5800E-03	4.8059E+00	3.9692E-01	1.2542E+00	1.0514E-01
8.900	7.9635E-02	5.8758E-03	4.9833E+00	4.1354E-01	1.2728E+00	1.0798E-01
9.200	8.3186E-02	6.1599E-03	5.1602E+00	4.3013E-01	1.2913E+00	1.1082E-01
9.500	8.6612E-02	6.4331E-03	5.3364E+00	4.4668E-01	1.3098E+00	1.1365E-01
9.800	8.9921E-02	6.6963E-03	5.5120E+00	4.6319E-01	1.3282E+00	1.1648E-01
10.100	9.3122E-02	6.9504E-03	5.6870E+00	4.7965E-01	1.3466E+00	1.1930E-01
10.400	9.6222E-02	7.1961E-03	5.8615E+00	4.9604E-01	1.3649E+00	1.2210E-01
24.000	1.9139E-01	1.4657E-02	1.3276E+01	1.1444E+00	2.1423E+00	2.3162E-01
96.000	3.5713E-01	2.2457E-02	4.3017E+01	2.5407E+00	4.2478E+00	3.4845E-01
720.000	6.1637E-01	3.1371E-02	1.2501E+02	5.3505E+00	6.5728E+00	4.3275E-01

Columbia_5u.o0

Cumulative Dose Summary

	CR		EAB		LPZ	
Time (hr)	Thyroid (rem)	TEDE (rem)	Thyroid (rem)	TEDE (rem)	Thyroid (rem)	TEDE (rem)
0.000	0.0000E+00	0.0000E+00	0.0000E+00	0.0000E+00	0.0000E+00	0.0000E+00
0.033	0.0000E+00	0.0000E+00	0.0000E+00	0.0000E+00	0.0000E+00	0.0000E+00
0.250	0.0000E+00	0.0000E+00	0.0000E+00	0.0000E+00	0.0000E+00	0.0000E+00
0.333	3.5921E-04	1.1406E-05	1.8376E-01	6.5731E-03	5.0253E-02	1.7976E-03
0.533	2.3563E-03	7.4772E-05	2.0057E-01	7.2350E-03	5.4851E-02	1.9786E-03
0.800	5.2383E-03	1.6620E-04	2.4043E-01	9.0366E-03	6.5754E-02	2.4713E-03
1.050	8.4271E-03	2.6767E-04	3.0096E-01	1.2247E-02	8.2307E-02	3.3493E-03
1.300	1.2356E-02	3.9341E-04	3.8380E-01	1.7142E-02	1.0496E-01	4.6879E-03
1.550	1.7269E-02	5.5172E-04	4.8878E-01	2.3908E-02	1.3367E-01	6.5384E-03
1.800	2.3395E-02	7.5045E-04	6.1574E-01	3.2722E-02	1.6839E-01	8.9488E-03
2.033	3.0382E-02	9.7857E-04	7.5390E-01	4.2938E-02	2.0618E-01	1.1743E-02
2.033	3.0383E-02	9.7860E-04	7.5392E-01	4.2939E-02	2.0618E-01	1.1743E-02
2.350	4.1028E-02	1.3275E-03	9.5733E-01	5.8644E-02	2.6181E-01	1.6038E-02
2.440	4.4200E-02	1.4317E-03	1.0150E+00	6.3158E-02	2.7759E-01	1.7273E-02
2.700	5.3709E-02	1.7444E-03	1.1813E+00	7.6303E-02	3.2307E-01	2.0867E-02
2.950	6.3308E-02	2.0607E-03	1.3406E+00	8.9080E-02	3.6664E-01	2.4362E-02
3.200	7.3323E-02	2.3912E-03	1.4994E+00	1.0198E-01	4.1006E-01	2.7890E-02
3.450	8.3725E-02	2.7349E-03	1.6576E+00	1.1500E-01	4.5332E-01	3.1451E-02
3.700	9.4488E-02	3.0911E-03	1.8152E+00	1.2814E-01	4.9644E-01	3.5042E-02
3.950	1.0559E-01	3.4589E-03	1.9724E+00	1.4137E-01	5.3940E-01	3.8661E-02
4.300	1.2165E-01	3.9919E-03	2.1915E+00	1.6004E-01	5.9933E-01	4.3768E-02
4.600	1.3586E-01	4.4640E-03	2.3785E+00	1.7617E-01	6.5048E-01	4.8179E-02
4.900	1.5044E-01	4.9491E-03	2.5648E+00	1.9241E-01	7.0143E-01	5.2619E-02
5.200	1.6536E-01	5.4460E-03	2.7504E+00	2.0874E-01	7.5218E-01	5.7085E-02
5.500	1.8059E-01	5.9538E-03	2.9352E+00	2.2515E-01	8.0273E-01	6.1574E-02
5.800	1.9610E-01	6.4714E-03	3.1194E+00	2.4163E-01	8.5309E-01	6.6081E-02
6.100	2.1188E-01	6.9981E-03	3.3028E+00	2.5817E-01	9.0326E-01	7.0604E-02
6.400	2.2788E-01	7.5330E-03	3.4856E+00	2.7476E-01	9.5325E-01	7.5141E-02
6.700	2.4410E-01	8.0755E-03	3.6677E+00	2.9138E-01	1.0030E+00	7.9687E-02
7.000	2.6052E-01	8.6247E-03	3.8491E+00	3.0803E-01	1.0527E+00	8.4241E-02
7.300	2.7710E-01	9.1802E-03	4.0299E+00	3.2470E-01	1.1021E+00	8.8799E-02
7.600	2.9385E-01	9.7412E-03	4.2100E+00	3.4138E-01	1.1514E+00	9.3360E-02
7.900	3.1074E-01	1.0307E-02	4.3895E+00	3.5805E-01	1.2005E+00	9.7921E-02
8.000	3.1640E-01	1.0497E-02	4.4492E+00	3.6361E-01	1.2168E+00	9.9441E-02
8.300	3.3303E-01	1.1055E-02	4.6279E+00	3.8028E-01	1.2355E+00	1.0229E-01
8.600	3.4898E-01	1.1589E-02	4.8059E+00	3.9692E-01	1.2542E+00	1.0514E-01
8.900	3.6428E-01	1.2101E-02	4.9833E+00	4.1354E-01	1.2728E+00	1.0798E-01
9.200	3.7899E-01	1.2593E-02	5.1602E+00	4.3013E-01	1.2913E+00	1.1082E-01
9.500	3.9314E-01	1.3066E-02	5.3364E+00	4.4668E-01	1.3098E+00	1.1365E-01
9.800	4.0677E-01	1.3521E-02	5.5120E+00	4.6319E-01	1.3282E+00	1.1648E-01
10.100	4.1993E-01	1.3960E-02	5.6870E+00	4.7965E-01	1.3466E+00	1.1930E-01
10.400	4.3264E-01	1.4385E-02	5.8615E+00	4.9604E-01	1.3649E+00	1.2210E-01
24.000	8.0956E-01	2.6919E-02	1.3276E+01	1.1444E+00	2.1423E+00	2.3162E-01
96.000	1.3876E+00	4.5090E-02	4.3017E+01	2.5407E+00	4.2478E+00	3.4845E-01
720.000	2.2115E+00	7.0347E-02	1.2501E+02	5.3505E+00	6.5728E+00	4.3275E-01

EAB Dose Summary (Columbia_1f.o0, Columbia_2f.o0, Columbia_3f.o0, Columbia_4f.o0, Columbia_5f.o0)

Time	1f EAB TEDE	2f EAB TEDE	3f EAB TEDE	4f EAB TEDE	5f EAB TEDE		Sum of Dose D_i
T_i	$1f_i$	$2f_i$	$3f_i$	$4f_i$	$5f_i$		$1f_i+2f_i+3f_i+4f_i+5f_i$
(hrs)	(rem)	(rem)	(rem)	(rem)	(rem)		(rem)
0.000	0.000	0.000	0.000	0.000	0.000		0.000
0.033	0.000	0.000	0.000	0.000	0.000		0.000
0.250	0.044	0.018	0.238	0.000	0.000		0.299
0.333	0.075	0.031	0.410	0.000	0.007		0.522
0.533	0.143	0.061	0.437	0.015	0.007		0.662
0.800	0.279	0.130	0.492	0.063	0.009		0.973
1.050	0.454	0.234	0.564	0.155	0.012		1.419
1.300	0.645	0.362	0.641	0.283	0.017		1.948
1.550	0.842	0.509	0.721	0.443	0.024		2.539
1.800	1.045	0.674	0.803	0.630	0.033		3.184
2.033	1.238	0.840	0.881	0.826	0.043		3.828
2.350	1.349	0.961	0.958	1.093	0.059		4.419
2.440	1.367	0.989	0.971	1.163	0.063		4.553
2.700	1.415	1.066	1.004	1.358	0.076		4.918
2.950	1.457	1.135	1.033	1.533	0.089		5.247
3.200	1.496	1.201	1.060	1.699	0.102		5.557
3.450	1.532	1.262	1.085	1.855	0.115		5.849
3.700	1.566	1.320	1.109	2.003	0.128		6.125
3.950	1.597	1.375	1.130	2.142	0.141		6.386
4.300	1.637	1.448	1.159	2.326	0.160		6.729
4.600	1.669	1.506	1.181	2.473	0.176		7.004
4.900	1.698	1.560	1.201	2.611	0.192		7.262
5.200	1.725	1.611	1.220	2.741	0.209		7.504
5.500	1.750	1.658	1.237	2.862	0.225		7.732
5.800	1.773	1.704	1.253	2.977	0.242		7.947
6.100	1.794	1.746	1.268	3.085	0.258		8.151
6.400	1.814	1.786	1.281	3.187	0.275		8.343
6.700	1.832	1.824	1.294	3.284	0.291		8.525
7.000	1.849	1.860	1.306	3.375	0.308		8.698
7.300	1.865	1.894	1.317	3.462	0.325		8.862
7.600	1.880	1.927	1.327	3.543	0.341		9.018
7.900	1.894	1.957	1.337	3.621	0.358		9.167
8.000	1.898	1.967	1.340	3.646	0.364		9.215
8.300	1.911	1.996	1.349	3.719	0.380		9.355
8.600	1.923	2.024	1.357	3.788	0.397		9.488
8.900	1.934	2.050	1.365	3.854	0.414		9.616
9.200	1.944	2.075	1.372	3.916	0.430		9.738
9.500	1.954	2.099	1.379	3.976	0.447		9.855
9.800	1.964	2.122	1.386	4.033	0.463		9.968
10.100	1.973	2.144	1.392	4.088	0.480		10.076
10.400	1.981	2.165	1.398	4.140	0.496		10.181
24.000	2.179	2.721	1.536	5.427	1.144		13.007
96.000	2.391	3.354	1.682	6.651	2.541		16.619
720.000	2.832	4.662	1.989	8.797	5.351		23.630

RADTRAD Two-hour EAB Dose

Summations of various time intervals were performed to determine the 2 hour period with the maximum EAB dose. It was observed that the limiting dose increment occurred over the interval from 0.80 hr to 2.70 hr (1.90 hr) with a net dose increment of 3.945 rem. The dose rates of the time intervals on either side the limiting interval were then determined. It was found that the interval from 2.70 hr to 2.95 hr had the higher dose rate equal to 1.32 rem/hr over the 0.25 hr interval. It was assumed that the rate was uniform over the interval and the incremental dose would be approximately 0.132 rem for 0.10 hr. The dose values of 3.945 and 0.132 rem were summed to 4.077 rem and rounded to 4.08 rem for the 2hr period. This sum corresponds to an interval from 0.80 hr to 2.80 hr and provides a realistic approximation of the maximum 2 hour EAB dose.

Two-hour EAB Dose

Time Interval	Dose over Interval (rem)	Dose Rate (rem/hr)	Time Increment (hr)	Dose Increment Dose Rate x Time Increment (rem)
0.80 to 2.70 hrs	3.945	2.076	1.90	3.945
2.70 to 2.95 hrs	0.329	1.317	0.10	0.132
		Sum	**2.00**	**4.08**

Spray credit in the drywell as a means for removing activity must recognize droplet loss

Proprietary Information Removed

Proprietary Information Removed

Proprietary Information Removed

Proprietary Information Removed

Proprietary Information Removed

the final equivalent fall height equals about 8 feet.

References

1. DWG M200 SH.48A

2. Spraying Systems Co. Report: "Spray Characterization for 1-7G-SS40 FogJet Nozzles", November 2000

3. Keith F. Knasiak, Spraying Systems Co.:"Nozzle Positioning - Supplement to Report No. 20T37", December 2000

4. Columbia Drywell Composite Drawings
SM 135, Rev. G (Active), SM 136, Rev. F (Active)
SM 183, Rev. F (Active), SM 187, Rev. F (Active)
SM 188, Rev. F (History), SM 190, Rev. F (Active)
SM 197, Rev. E (Active)

Proprietary Information Removed

Proprietary Information Removed

Proprietary Information Removed

Proprietary Information Removed

Potential liquid leakage bypass exists due to contaminated suppression pool water being re-circulated through ECCS piping by HPCS and RCIC pumps that can leak into the Condensate Storage Tanks (CST) through the HPCS and RCIC CST suctions and test returns. With iodine transferred to the CST water, some iodine partitioning will occur (equilibrium assumed to exist between the aqueous and gas phases), and iodine activity will be released from the CST atmosphere into the environment.

The purpose of this attachment is to add the liquid leakage bypass to the plant model so as to evaluate its impact on offsite and control room doses.

Figure 1 of this attachment is the updated Figure 1 from the main calculation, showing the added CST leakage model. One new control volume is shown (the CST volume), as well as two new junctions: the SP-to-CST leakage junction (14) and the CST-to-environment leakage junction (15). Because the iodine partitioning in the CST water is not complete, an effective "filter" is used to release the proper amount of iodine from the suppression pool to the CST in a manner identical to that used for the ESF leakage treatment.

The assumptions regarding the liquid leakage bypass are as follows:

1) The CST volume is 18,048 ft^3 (135,000 gal per Reference 1 of this attachment).
2) The liquid leakage to the CST is 0.48 gpm (Reference 1 of this attachment) from 0.25 hour into the event (when the DW sprays begin operation) until 30 days. 0.48 gpm is also assumed to be the gas volumetric flow through the CST vent to the environment. Note that at the end of the 30-day time frame, 2,772 ft^3 of suppression pool water will have leaked to the environment through this leak path, which represents only about 2% of the suppression pool water volume. Therefore, adding this leak path to the model will not alter the dose impact of the ESF leakage, as the activity in the suppression pool is not significantly affected.
3) The iodine release fraction from the CST water to the environment is assumed to be 10% (Reference 1 of this attachment). Noble gas appearing as the result of iodine decay in the CST is also released.
4) The CST CR and offsite X/Qs from Design Input section of the main calculation are used.

As explained in the main calculation, this analysis requires two different STARDOSE runs, one for the filtered CR intake and one for the unfiltered CR inleakage.

Figure 1 - Updated Plant Model

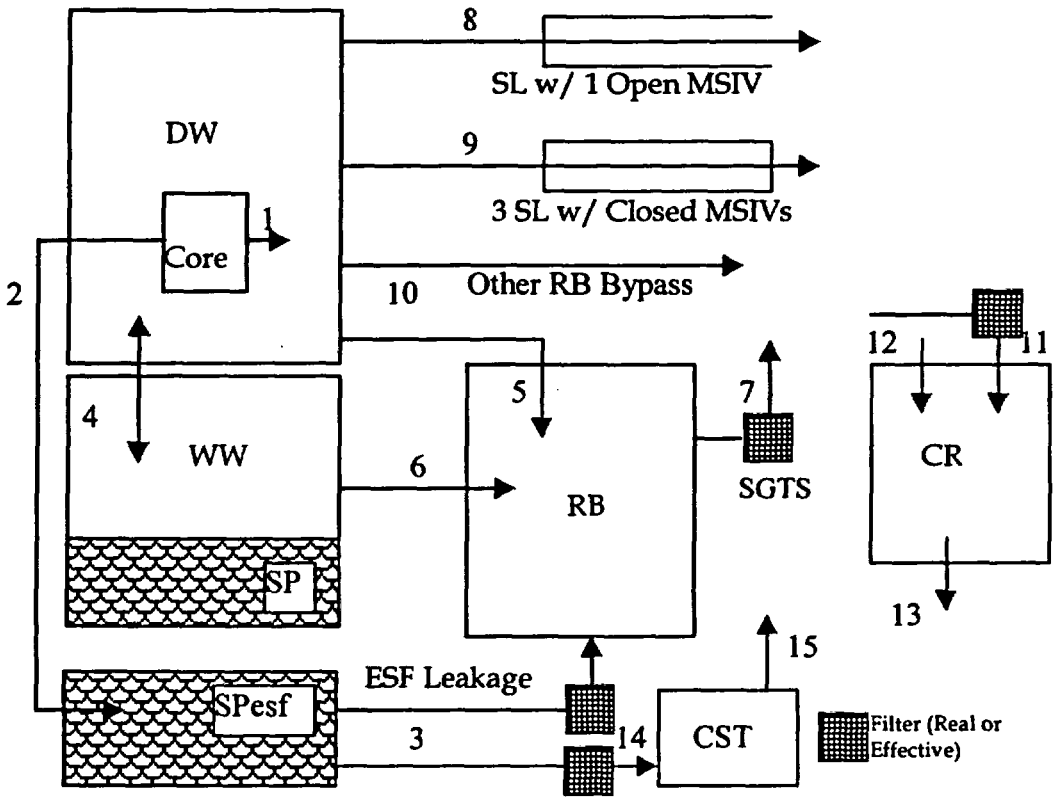

SP Suppression Pool
SPesf Suppression Pool (for Parallel Treatment of ESF Leakage Only)

The liquid leakage bypass results are compared to those of the main calculation in Table 1 of this attachment. The INPUT.DAT files for both the CR filtered intake and the CR unfiltered inleakage runs (as well as 720-hour CR and LPZ dose excerpts from the RESULTS.OUT files for both runs) are included at the end this attachment.

Table 1
Results with and without CST

Cases	30-d CR TEDE (rem)	30-d LPZ TEDE (rem)
Licensing-basis without CST leakage	3.44	3.85
Licensing-basis with CST leakage	3.47	3.92
Dose from CST leakage (rem)	0.03	0.07
% contribution of CST leakage	0.87%	1.8%

These results show that the impact of the added liquid leakage bypass is very small, only 1.8% for the offsite dose, and even smaller for the control room dose (about 0.9%). Note that it is likely that even these small impacts are overstated; the iodine released from the CST to the environment will be much less than 10% of that added to the CST, as the suppression pool pH (the leakage source) remains above 7.3 in the event of a LOCA (Reference 2).

References for Attachment 2 are as follows:

1. Energy Northwest Calculation, NE-02-99-12, Revision 0, 4/25/00

2. "Post-LOCA Suppression Pool pH", NE-02-03-15, Revision 0

Input file - INPUT.DAT - Filtered Intake

```
edit_time
0.0 0.25 0.5 0.75 1.0 1.25 1.5 1.75 2.0 2.25 2.5 2.75 3.0 3.25 3.5 3.75 4.0 8.0 24.0 48.0 96.0 240.0 720.0
end_edit_time

participating_isotopes
Kr83m   Kr85m   Kr85    Kr87    Kr88    Kr89
Xe131m  Xe133m  Xe133   Xe135m  Xe135   Xe137   Xe138
I131Org I131Elem        I131Part
I132Org I132Elem        I132Part
I133Org I133Elem        I133Part
I134Org I134Elem        I134Part
I135Org I135Elem        I135Part
Rb86    Cs134   Cs136   Cs137
Sb127   Sb129   Te127m  Te127   Te129m  Te129   Te131m  Te132
Ba137m  Ba139   Ba140
Mo99    Tc99m   Ru103   Ru105   Ru106   Rh105
Y90     Y91     Y92     Y93     Zr95    Zr97    Nb95
La140   La141   La142   Pr143   Nd147   Am241   Cm242   Cm244
Ce141   Ce143   Ce144   Np239   Pu238   Pu239   Pu240   Pu241
Sr89    Sr90    Sr91    Sr92
end_participating_isotopes

core
thermal_power                   3556
elemental_iodine_frac           0.0485
organic_iodine_frac             0.0015
particulate_iodine_frac                 0.95
release_frac
to_control_volume DW
Time N_Gas I_Grp CsGrp TeGrp BaGrp NMtls CeGrp LaGrp SrGrp
0.033   0       0       0       0       0       0       0       0       0
0.533   0.1     0.1     0.1     0       0       0       0       0       0
2.033   0.633   0.167   0.133   0.033   0.0133  0.00167 0.00033 0.00013 0.0133
720     0       0       0       0       0       0       0       0       0
end_to_control_volume
to_control_volume SP
Time N_Gas I_Grp CsGrp TeGrp BaGrp NMtls CeGrp LaGrp SrGrp
0.033   0       0       0       0       0       0       0       0       0
0.533   0       0.2     0       0       0       0       0       0       0
2.033   0       0.334   0       0       0       0       0       0       0
720     0       0       0       0       0       0       0       0       0
end_to_control_volume
end_release_frac
end_core

control_volume
obj_type                                OBJ_CV
name                                    DW
air_volume                              2.0054e+005
water_volume                    0
surface_area                    1
has_recirc_filter                       false
removal_rate_to_surface
Time    NobleGas        ElemIodine      OrgIodine       PartIodine      Solubles        Insolubles
0.25    0.00    0.001   0.00    0.001   0.001   0.001
2.44    0.00    6.20    0.00    6.20    6.20    6.20
24.00   0.00    0.62    0.00    0.62    0.62    0.62
720.0   0.00    0.00    0.00    0.00    0.00    0.00
end_removal_rate_to_surface
frac_4_daughter_resusp_from_surface
Time    NobleGas        ElemIodine      OrgIodine       PartIodine      Solubles        Insolubles
720     1       0       0       0       0
end_frac_4_daughter_resusp_from_surface
end_control_volume

control_volume
obj_type                                OBJ_CV
name                                    WW
```

```
air_volume                              1.442e+005
water_volume                            1.373e+005
surface_area                            0
has_recirc_filter                       false
removal_rate_to_waterpool
Time    NobleGas        ElemIodine      OrgIodine       PartIodine      Solubles        Insolubles
720     0       0       0       0       0       0
end_removal_rate_to_waterpool
frac_4_daughter_resusp_from_water
Time    NobleGas        ElemIodine      OrgIodine       PartIodine      Solubles        Insolubles
720     0       0       0       0       0       0
end_frac_4_daughter_resusp_from_water
decontamination_factor
Time    NobleGas        ElemIodine      OrgIodine       PartIodine      Solubles        Insolubles
720     1       1       1       1       1       1
end_decontamination_factor
end_control_volume

control_volume
obj_type                                OBJ_CV
name                                    RB
air_volume                              5000
water_volume                            0
surface_area                            0
has_recirc_filter                       false
end_control_volume

control_volume
obj_type                                OBJ_CV
name                                    SP
air_volume                              1.373e+005
water_volume                            0
surface_area                            0
has_recirc_filter                       false
end_control_volume

control_volume
obj_type                                OBJ_CV
name                                    CST
air_volume                              18048
water_volume                            0
surface_area                            0
has_recirc_filter                       false
end_control_volume

control_volume
obj_type                                OBJ_CR
name                                    Control_Room
air_volume                              2.14e+005
water_volume                            0
surface_area                            0
has_recirc_filter                       false
breathing_rate
Time    (hr)    Value   (cms)
720             0.00035
end_breathing_rate
occupancy_factor
Time    (hr)    Value   (frac)
24              1
96              0.6
720             0.4
end_occupancy_factor
end_control_volume

junction
junction_type                   AIR_JUNCTION
downstream_location             AIR_SPACE
upstream                                CORE
downstream                              DW
has_filter                              false
```

```
flow_rate
Time    (hr)    Value   (cfm)
720             1
end_flow_rate
end_junction

junction
junction_type                   AIR_JUNCTION
downstream_location             AIR_SPACE
upstream                                CORE
downstream                              SP
has_filter                              false
flow_rate
Time    (hr)    Value   (cfm)
720             1
end_flow_rate
end_junction

junction
junction_type                   AIR_JUNCTION
downstream_location             WATER_POOL
upstream                                DW
downstream                              WW
has_filter                              false
flow_rate
Time    (hr)    Value   (cfm)
2.033           0
720             1.442e5
end_flow_rate
end_junction

junction
junction_type                   AIR_JUNCTION
downstream_location             AIR_SPACE
upstream                                WW
downstream                              DW
has_filter                              false
flow_rate
Time    (hr)    Value   (cfm)
2.033           0
720             1.442e5
end_flow_rate
end_junction

junction
junction_type                   AIR_JUNCTION
downstream_location             AIR_SPACE
upstream                                DW
downstream                              environment
has_filter                              false
flow_rate
Time    (hr)    Value   (cfm)
24      0.1384
720     0.0692
end_flow_rate
X_over_Q_4_ctrl_room
Time    (hr)    Value   (s/m*3)
2       8.81e-4
8       3.75e-4
24      1.93e-4
96      1.50e-4
720     1.44e-4
end_X_over_Q_4_ctrl_room
X_over_Q_4_site_boundary
Time    (hr)    Value   (s/m*3)
720     1.81e-4
end_X_over_Q_4_site_boundary
X_over_Q_4_low_population_zone
Time    (hr)    Value   (s/m*3)
8       4.95e-5
```

```
24      3.69e-5
96      1.95e-5
720     7.81e-6
end_X_over_Q_4_low_population_zone
end_junction

junction
junction_type                   AIR_JUNCTION
downstream_location             AIR_SPACE
upstream                                DW
downstream                              environment
has_filter                              true
flow_rate
Time    (hr)    Value   (cfm)
24      0.4152
720     0.2076
end_flow_rate
filter_efficiency
Time    NobleGas        ElemIodine      OrgIodine       PartIodine      Solubles        Insolubles
720     0               0.427           0.001           0.897           0.897           0.897
end_filter_efficiency
frac_4_daughter_resusp
Time    NobleGas        ElemIodine      OrgIodine       PartIodine      Solubles        Insolubles
720     1       0       0       0       0       0
end_frac_4_daughter_resusp
X_over_Q_4_ctrl_room
Time    (hr)    Value   (s/m*3)
2       8.81e-4
8       3.75e-4
24      1.93e-4
96      1.50e-4
720     1.44e-4
end_X_over_Q_4_ctrl_room
X_over_Q_4_site_boundary
Time    (hr)    Value   (s/m*3)
720     1.81e-4
end_X_over_Q_4_site_boundary
X_over_Q_4_low_population_zone
Time    (hr)    Value   (s/m*3)
8       4.95e-5
24      3.69e-5
96      1.95e-5
720     7.81e-6
end_X_over_Q_4_low_population_zone
end_junction

junction
junction_type                   AIR_JUNCTION
downstream_location             AIR_SPACE
upstream                                DW
downstream                              RB
has_filter                              false
flow_rate
Time    (hr)    Value   (cfm)
0.333           0
24              0.696
720             0.348
end_flow_rate
end_junction

junction
junction_type                   AIR_JUNCTION
downstream_location             AIR_SPACE
upstream                                WW
downstream                              RB
has_filter                              false
flow_rate
Time (hr) Value (cfm)
0.333           0
24              0.5
```

```
720             0.25
end_flow_rate
end_junction

junction
junction_type                   AIR_JUNCTION
downstream_location             AIR_SPACE
upstream                                DW
downstream                              environment
has_filter                              false
flow_rate
Time    (hr)    Value   (cfm)
0.333           0.752
24              0.056
720             0.028
end_flow_rate
X_over_Q_4_ctrl_room
Time    (hr)    Value   (s/m*3)
2       2.82E-4
8       2.17E-4
24      8.77E-5
96      7.42E-5
720     6.40E-5
end_X_over_Q_4_ctrl_room
X_over_Q_4_site_boundary
Time    (hr)    Value   (s/m*3)
720     1.81e-4
end_X_over_Q_4_site_boundary
X_over_Q_4_low_population_zone
Time    (hr)    Value   (s/m*3)
8       4.95e-5
24      3.69e-5
96      1.95e-5
720     7.81e-6
end_X_over_Q_4_low_population_zone
end_junction

junction
junction_type                   AIR_JUNCTION
downstream_location             AIR_SPACE
upstream                                WW
downstream                              environment
has_filter                              false
flow_rate
Time (hr) Value (cfm)
0.333           0.541
24              0.04
720             0.02
end_flow_rate
X_over_Q_4_ctrl_room
Time    (hr)    Value   (s/m*3)
2       2.82E-4
8       2.17E-4
24      8.77E-5
96      7.42E-5
720     6.40E-5
end_X_over_Q_4_ctrl_room
X_over_Q_4_site_boundary
Time    (hr)    Value   (s/m*3)
720     1.81e-4
end_X_over_Q_4_site_boundary
X_over_Q_4_low_population_zone
Time    (hr)    Value   (s/m*3)
8       4.95e-5
24      3.69e-5
96      1.95e-5
720     7.81e-6
end_X_over_Q_4_low_population_zone
end_junction
```

```
junction
junction_type                   AIR_JUNCTION
downstream_location             AIR_SPACE
upstream                                SP
downstream                              RB
has_filter                              true
flow_rate
Time    (hr)    Value   (cfm)
0.25    0
720     0.268
end_flow_rate
filter_efficiency
Time    NobleGas        ElemIodine      OrgIodine       PartIodine      Solubles        Insolubles
720     0.5     0       0       0.99999 0       0
end_filter_efficiency
end_junction

junction
junction_type                   AIR_JUNCTION
downstream_location             AIR_SPACE
upstream                                RB
downstream                              environment
has_filter                              true
flow_rate
Time    (hr)    Value   (cfm)
720     5000
end_flow_rate
filter_efficiency
Time    NobleGas        ElemIodine      OrgIodine       PartIodine      Solubles        Insolubles
0.333   0       0       0       0       0       0
720     0       0.98    0.98    0.98    0.98    0.98
end_filter_efficiency
frac_4_daughter_resusp
Time    NobleGas        ElemIodine      OrgIodine       PartIodine      Solubles        Insolubles
720     1       1       0       0       0       0
end_frac_4_daughter_resusp
X_over_Q_4_ctrl_room
Time    (hr)    Value   (s/m*3)
0.333   2.82E-4
2       1.43E-4
8       1.05E-4
24      4.14E-5
96      3.52E-5
720     3.03E-5
end_X_over_Q_4_ctrl_room
X_over_Q_4_site_boundary
Time    (hr)    Value   (s/m*3)
720     1.81e-4
end_X_over_Q_4_site_boundary
X_over_Q_4_low_population_zone
Time    (hr)    Value   (s/m*3)
8       4.95e-5
24      3.69e-5
96      1.95e-5
720     7.81e-6
end_X_over_Q_4_low_population_zone
end_junction

junction
junction_type                   AIR_JUNCTION
downstream_location             AIR_SPACE
upstream                                SP
downstream                              CST
has_filter                              true
flow_rate
Time    (hr)    Value   (cfm)
0.25    0
720     0.064
end_flow_rate
filter_efficiency
```

```
Time    NobleGas        ElemIodine      OrgIodine       PartIodine      Solubles        Insolubles
720     0.5     0       0       0.99999 0       0
end_filter_efficiency
end_junction

junction
junction_type                   AIR_JUNCTION
downstream_location             AIR_SPACE
upstream                                CST
downstream                              environment
has_filter                              false
flow_rate
Time    (hr)    Value   (cfm)
0.25    0
720     0.064
end_flow_rate
X_over_Q_4_ctrl_room
Time    (hr)    Value   (s/m*3)
2       4.18E-04
8       1.59E-04
24      6.31E-05
96      5.78E-05
720     5.57E-05
end_X_over_Q_4_ctrl_room
X_over_Q_4_site_boundary
Time    (hr)    Value   (s/m*3)
720     1.81e-4
end_X_over_Q_4_site_boundary
X_over_Q_4_low_population_zone
Time    (hr)    Value   (s/m*3)
8       4.95e-5
24      3.69e-5
96      1.95e-5
720     7.81e-6
end_X_over_Q_4_low_population_zone
end_junction

junction
junction_type                   AIR_JUNCTION
downstream_location             AIR_SPACE
upstream                                environment
downstream                              Control_Room
has_filter                              true
flow_rate
Time    (hr)    Value   (cfm)
720     800
end_flow_rate
filter_efficiency
Time    NobleGas        ElemIodine      OrgIodine       PartIodine      Solubles        Insolubles
720     0       0.95    0.95    0.99    0.99    0.99
end_filter_efficiency
frac_4_daughter_resusp
Time    NobleGas        ElemIodine      OrgIodine       PartIodine      Solubles        Insolubles
720     1       1       0       0       0       0
end_frac_4_daughter_resusp
end_junction

junction
junction_type                   AIR_JUNCTION
downstream_location             AIR_SPACE
upstream                                Control_Room
downstream                              environment
has_filter                              false
flow_rate
Time    (hr)    Value   (cfm)
720     850
end_flow_rate
X_over_Q_4_ctrl_room
Time    (hr)    Value   (s/m*3)
720     0
```

```
end_X_over_Q_4_ctrl_room
X_over_Q_4_site_boundary
Time    (hr)    Value   (s/m*3)
720     0
end_X_over_Q_4_site_boundary
X_over_Q_4_low_population_zone
Time    (hr)    Value   (s/m*3)
720     0
end_X_over_Q_4_low_population_zone
end_junction

environment
breathing_rate_sb
Time (hr)       Value (cms)
8       0.00035
720     0.0
end_breathing_rate_sb
breathing_rate_lpz
Time (hr)       Value (cms)
8       0.00035
24      0.00018
720     0.00023
end_breathing_rate_lpz
end_environment
```

Output File Excerpt - 720 Hour CR and LPZ TEDE - Filtered Intake

Control_Room

	thyroid	wbody	skin	CEDE
Total dose:	5.60E+000	3.37E-001	6.50E+000	2.39E-001
Noble gas	0.00E+000	3.26E-001	6.44E+000	0.00E+000
Org iodine	1.28E+000	4.43E-005	3.81E-004	3.94E-002
Elem iodine	2.95E+000	1.11E-002	5.50E-002	1.23E-001
Part iodine	1.30E+000	1.25E-004	9.18E-004	4.07E-002
Cesium	1.25E-002	1.30E-005	0.00E+000	1.39E-002
Tellurium	4.79E-002	3.24E-006	0.00E+000	2.31E-003
Barium	8.92E-005	4.79E-007	0.00E+000	3.55E-004
Noble metal	4.84E-005	3.85E-007	0.00E+000	2.71E-003
Lanthanides	8.06E-006	6.70E-007	0.00E+000	1.51E-003
Cerium	3.05E-006	1.69E-007	0.00E+000	5.23E-003
Strontinum	9.79E-006	1.79E-006	0.00E+000	1.09E-002

environment

	thyroid	wbody	skin	CEDE
EAB dose:	6.15E+001	1.59E+001	2.02E+001	3.12E+000
LPZ dose:	2.69E+001	2.75E+000	2.74E+000	1.17E+000

	thyrd_eab	wbody_eab	skin_eab	CEDE_eab	thyrd_lpz	wbody_lpz	skin_lpz	CEDE_lpz
Noble gas	0.00E+000	1.48E+001	1.99E+001	0.00E+000	0.00E+000	2.61E+000	2.70E+000	0.00E+000
Org iodine	3.62E+000	2.16E-002	1.02E-002	1.13E-001	3.53E+000	3.52E-003	1.60E-003	1.09E-001
Elem iodine	8.55E+000	8.80E-001	2.45E-001	2.74E-001	9.73E+000	9.14E-002	2.57E-002	3.07E-001
Part iodine	4.73E+001	1.47E-001	5.17E-002	1.48E+000	1.30E+001	4.02E-002	1.41E-002	4.09E-001
Cesium	4.46E-001	8.86E-003	0.00E+000	4.97E-001	1.23E-001	2.40E-003	0.00E+000	1.37E-001
Tellurium	1.62E+000	2.41E-003	0.00E+000	7.82E-002	4.48E-001	6.56E-004	0.00E+000	2.16E-002
Barium	2.94E-003	3.22E-004	0.00E+000	1.18E-002	8.14E-004	8.70E-005	0.00E+000	3.27E-003
Noble metal	1.58E-003	2.73E-004	0.00E+000	8.87E-002	4.37E-004	7.39E-005	0.00E+000	2.46E-002
Lanthanides	2.14E-004	1.93E-004	0.00E+000	4.81E-002	5.99E-005	4.62E-005	0.00E+000	1.34E-002
Cerium	1.01E-004	1.10E-004	0.00E+000	1.71E-001	2.80E-005	2.98E-005	0.00E+000	4.74E-002
Strontinum	3.40E-004	1.71E-003	0.00E+000	3.55E-001	9.41E-005	4.68E-004	0.00E+000	9.84E-002

STARDOSE 1.01 (c) 1996-2002 Polestar Applied Technology, Inc.
Thu Jul 01 12:27:50 2004

Input file - INPUT.DAT - Unfiltered Inleakage

```
edit_time
0.0 0.25 0.5 0.75 1.0 1.25 1.5 1.75 2.0 2.25 2.5 2.75 3.0 3.25 3.5 3.75 4.0 8.0 24.0 48.0 96.0 240.0 720.0
end_edit_time

participating_isotopes
Kr83m   Kr85m   Kr85    Kr87    Kr88    Kr89
Xe131m  Xe133m  Xe133   Xe135m  Xe135   Xe137   Xe138
I131Org I131Elem        I131Part
I132Org I132Elem        I132Part
I133Org I133Elem        I133Part
I134Org I134Elem        I134Part
I135Org I135Elem        I135Part
Rb86    Cs134   Cs136   Cs137
Sb127   Sb129   Te127m  Te127   Te129m  Te129   Te131m  Te132
Ba137m  Ba139   Ba140
Mo99    Tc99m   Ru103   Ru105   Ru106   Rh105
Y90     Y91     Y92     Y93     Zr95    Zr97    Nb95
La140   La141   La142   Pr143   Nd147   Am241   Cm242   Cm244
Ce141   Ce143   Ce144   Np239   Pu238   Pu239   Pu240   Pu241
Sr89    Sr90    Sr91    Sr92
end_participating_isotopes

core
thermal_power                   3556
elemental_iodine_frac           0.0485
organic_iodine_frac             0.0015
particulate_iodine_frac                 0.95
release_frac
to_control_volume DW
Time N_Gas I_Grp CsGrp TeGrp BaGrp NMtls CeGrp LaGrp SrGrp
0.033   0       0       0       0       0       0       0       0       0
0.533   0.1     0.1     0.1     0       0       0       0       0       0
2.033   0.633   0.167   0.133   0.033   0.0133  0.00167 0.00033 0.00013 0.0133
720     0       0       0       0       0       0       0       0       0
end_to_control_volume
to_control_volume SP
Time N_Gas I_Grp CsGrp TeGrp BaGrp NMtls CeGrp LaGrp SrGrp
0.033   0       0       0       0       0       0       0       0       0
0.533   0       0.2     0       0       0       0       0       0       0
2.033   0       0.334   0       0       0       0       0       0       0
720     0       0       0       0       0       0       0       0       0
end_to_control_volume
end_release_frac
end_core

control_volume
obj_type                                OBJ_CV
name                                    DW
air_volume                              2.0054e+005
water_volume                    0
surface_area                    1
has_recirc_filter                       false
removal_rate_to_surface
Time    NobleGas        ElemIodine      OrgIodine       PartIodine      Solubles        Insolubles
0.25    0.00    0.001   0.00    0.001   0.001   0.001
2.44    0.00    6.20    0.00    6.20    6.20    6.20
24.00   0.00    0.62    0.00    0.62    0.62    0.62
720.0   0.00    0.00    0.00    0.00    0.00    0.00
end_removal_rate_to_surface
frac_4_daughter_resusp_from_surface
Time    NobleGas        ElemIodine      OrgIodine       PartIodine      Solubles        Insolubles
720     1       0       0       0       0
end_frac_4_daughter_resusp_from_surface
end_control_volume

control_volume
obj_type                                OBJ_CV
```

```
name                                    WW
air_volume                              1.442e+005
water_volume                            1.373e+005
surface_area                            0
has_recirc_filter                       false
removal_rate_to_waterpool
Time    NobleGas        ElemIodine      OrgIodine       PartIodine      Solubles        Insolubles
720     0       0       0       0       0       0
end_removal_rate_to_waterpool
frac_4_daughter_resusp_from_water
Time    NobleGas        ElemIodine      OrgIodine       PartIodine      Solubles        Insolubles
720     0       0       0       0       0       0
end_frac_4_daughter_resusp_from_water
decontamination_factor
Time    NobleGas        ElemIodine      OrgIodine       PartIodine      Solubles        Insolubles
720     1       1       1       1       1       1
end_decontamination_factor
end_control_volume

control_volume
obj_type                                OBJ_CV
name                                    RB
air_volume                              5000
water_volume                            0
surface_area                            0
has_recirc_filter                       false
end_control_volume

control_volume
obj_type                                OBJ_CV
name                                    SP
air_volume                              1.373e+005
water_volume                            0
surface_area                            0
has_recirc_filter                       false
end_control_volume

control_volume
obj_type                                OBJ_CV
name                                    CST
air_volume                              18048
water_volume                            0
surface_area                            0
has_recirc_filter                       false
end_control_volume

control_volume
obj_type                                OBJ_CR
name                                    Control_Room
air_volume                              2.14e+005
water_volume                            0
surface_area                            0
has_recirc_filter                       false
breathing_rate
Time    (hr)    Value   (cms)
720             0.00035
end_breathing_rate
occupancy_factor
Time    (hr)    Value   (frac)
24              1
96              0.6
720             0.4
end_occupancy_factor
end_control_volume

junction
junction_type                   AIR_JUNCTION
downstream_location             AIR_SPACE
upstream                                CORE
downstream                              DW
```

```
has_filter                              false
flow_rate
Time    (hr)    Value   (cfm)
720             1
end_flow_rate
end_junction

junction
junction_type                   AIR_JUNCTION
downstream_location             AIR_SPACE
upstream                                CORE
downstream                              SP
has_filter                              false
flow_rate
Time    (hr)    Value   (cfm)
720             1
end_flow_rate
end_junction

junction
junction_type                   AIR_JUNCTION
downstream_location             WATER_POOL
upstream                                DW
downstream                              WW
has_filter                              false
flow_rate
Time    (hr)    Value   (cfm)
2.033           0
720             1.442e5
end_flow_rate
end_junction

junction
junction_type                   AIR_JUNCTION
downstream_location             AIR_SPACE
upstream                                WW
downstream                              DW
has_filter                              false
flow_rate
Time    (hr)    Value   (cfm)
2.033           0
720             1.442e5
end_flow_rate
end_junction

junction
junction_type                   AIR_JUNCTION
downstream_location             AIR_SPACE
upstream                                DW
downstream                              environment
has_filter                              false
flow_rate
Time    (hr)    Value   (cfm)
24      0.1384
720     0.0692
end_flow_rate
X_over_Q_4_ctrl_room
Time    (hr)    Value   (s/m*3)
2       4.70e-3
8       2.00e-3
24      1.03e-3
96      8.01e-4
720     7.69e-4
end_X_over_Q_4_ctrl_room
X_over_Q_4_site_boundary
Time    (hr)    Value   (s/m*3)
720     1.81e-4
end_X_over_Q_4_site_boundary
X_over_Q_4_low_population_zone
Time    (hr)    Value   (s/m*3)
```

```
8       4.95e-5
24      3.69e-5
96      1.95e-5
720     7.81e-6
end_X_over_Q_4_low_population_zone
end_junction

junction
junction_type                   AIR_JUNCTION
downstream_location             AIR_SPACE
upstream                                DW
downstream                              environment
has_filter                              true
flow_rate
Time    (hr)    Value   (cfm)
24      0.4152
720     0.2076
end_flow_rate
filter_efficiency
Time    NobleGas        ElemIodine      OrgIodine       PartIodine      Solubles        Insolubles
720     0               0.427           0.001           0.897           0.897           0.897
end_filter_efficiency
frac_4_daughter_resusp
Time    NobleGas        ElemIodine      OrgIodine       PartIodine      Solubles        Insolubles
720     1       0       0       0       0       0
end_frac_4_daughter_resusp
X_over_Q_4_ctrl_room
Time    (hr)    Value   (s/m*3)
2       4.70e-3
8       2.00e-3
24      1.03e-3
96      8.01e-4
720     7.69e-4
end_X_over_Q_4_ctrl_room
X_over_Q_4_site_boundary
Time    (hr)    Value   (s/m*3)
720     1.81e-4
end_X_over_Q_4_site_boundary
X_over_Q_4_low_population_zone
Time    (hr)    Value   (s/m*3)
8       4.95e-5
24      3.69e-5
96      1.95e-5
720     7.81e-6
end_X_over_Q_4_low_population_zone
end_junction

junction
junction_type                   AIR_JUNCTION
downstream_location             AIR_SPACE
upstream                                DW
downstream                              RB
has_filter                              false
flow_rate
Time    (hr)    Value   (cfm)
0.333           0
24              0.696
720             0.348
end_flow_rate
end_junction

junction
junction_type                   AIR_JUNCTION
downstream_location             AIR_SPACE
upstream                                WW
downstream                              RB
has_filter                              false
flow_rate
Time (hr) Value (cfm)
0.333           0
```

```
24              0.5
720             0.25
end_flow_rate
end_junction

junction
junction_type                   AIR_JUNCTION
downstream_location             AIR_SPACE
upstream                                DW
downstream                              environment
has_filter                              false
flow_rate
Time    (hr)    Value   (cfm)
0.333           0.752
24              0.056
720             0.028
end_flow_rate
X_over_Q_4_ctrl_room
Time    (hr)    Value   (s/m*3)
2       7.02E-4
8       3.19E-4
24      1.30E-4
96      1.05E-4
720     9.00E-5
end_X_over_Q_4_ctrl_room
X_over_Q_4_site_boundary
Time    (hr)    Value   (s/m*3)
720     1.81e-4
end_X_over_Q_4_site_boundary
X_over_Q_4_low_population_zone
Time    (hr)    Value   (s/m*3)
8       4.95e-5
24      3.69e-5
96      1.95e-5
720     7.81e-6
end_X_over_Q_4_low_population_zone
end_junction

junction
junction_type                   AIR_JUNCTION
downstream_location             AIR_SPACE
upstream                                WW
downstream                              environment
has_filter                              false
flow_rate
Time (hr) Value (cfm)
0.333           0.541
24              0.04
720             0.02
end_flow_rate
X_over_Q_4_ctrl_room
Time    (hr)    Value   (s/m*3)
2       7.02E-4
8       3.19E-4
24      1.30E-4
96      1.05E-4
720     9.00E-5
end_X_over_Q_4_ctrl_room
X_over_Q_4_site_boundary
Time    (hr)    Value   (s/m*3)
720     1.81e-4
end_X_over_Q_4_site_boundary
X_over_Q_4_low_population_zone
Time    (hr)    Value   (s/m*3)
8       4.95e-5
24      3.69e-5
96      1.95e-5
720     7.81e-6
end_X_over_Q_4_low_population_zone
end_junction
```

```
junction
junction_type                 AIR_JUNCTION
downstream_location           AIR_SPACE
upstream                              SP
downstream                            RB
has_filter                            true
flow_rate
Time    (hr)    Value   (cfm)
0.25    0
720     0.268
end_flow_rate
filter_efficiency
Time    NobleGas        ElemIodine      OrgIodine       PartIodine      Solubles        Insolubles
720     0.5     0       0       0.99999 0       0
end_filter_efficiency
end_junction

junction
junction_type                 AIR_JUNCTION
downstream_location           AIR_SPACE
upstream                              RB
downstream                            environment
has_filter                            true
flow_rate
Time    (hr)    Value   (cfm)
720     5000
end_flow_rate
filter_efficiency
Time    NobleGas        ElemIodine      OrgIodine       PartIodine      Solubles        Insolubles
0.333   0       0       0       0       0       0
720     0       0.98    0.98    0.98    0.98    0.98
end_filter_efficiency
frac_4_daughter_resusp
Time    NobleGas        ElemIodine      OrgIodine       PartIodine      Solubles        Insolubles
720     1       1       0       0       0       0
end_frac_4_daughter_resusp
X_over_Q_4_ctrl_room
Time    (hr)    Value   (s/m*3)
0.333   7.02E-4
2       6.95E-4
8       3.36E-4
24      1.28E-4
96      9.72E-5
720     7.69E-5
end_X_over_Q_4_ctrl_room
X_over_Q_4_site_boundary
Time    (hr)    Value   (s/m*3)
720     1.81e-4
end_X_over_Q_4_site_boundary
X_over_Q_4_low_population_zone
Time    (hr)    Value   (s/m*3)
8       4.95e-5
24      3.69e-5
96      1.95e-5
720     7.81e-6
end_X_over_Q_4_low_population_zone
end_junction

junction
junction_type                 AIR_JUNCTION
downstream_location           AIR_SPACE
upstream                              SP
downstream                            CST
has_filter                            true
flow_rate
Time    (hr)    Value   (cfm)
0.25    0
720     0.064
end_flow_rate
```

```
filter_efficiency
Time    NobleGas        ElemIodine      OrgIodine       PartIodine      Solubles        Insolubles
720     0.5     0       0       0.99999 0       0
end_filter_efficiency
end_junction

junction
junction_type                   AIR_JUNCTION
downstream_location             AIR_SPACE
upstream                                CST
downstream                              environment
has_filter                              false
flow_rate
Time    (hr)    Value   (cfm)
0.25    0
720     0.064
end_flow_rate
X_over_Q_4_ctrl_room
Time    (hr)    Value   (s/m*3)
2       4.18E-04
8       1.59E-04
24      6.31E-05
96      5.78E-05
720     5.57E-05
end_X_over_Q_4_ctrl_room
X_over_Q_4_site_boundary
Time    (hr)    Value   (s/m*3)
720     1.81e-4
end_X_over_Q_4_site_boundary
X_over_Q_4_low_population_zone
Time    (hr)    Value   (s/m*3)
8       4.95e-5
24      3.69e-5
96      1.95e-5
720     7.81e-6
end_X_over_Q_4_low_population_zone
end_junction

junction
junction_type                   AIR_JUNCTION
downstream_location             AIR_SPACE
upstream                                environment
downstream                              Control_Room
has_filter                              false
flow_rate
Time    (hr)    Value   (cfm)
720     50
end_flow_rate
end_junction

junction
junction_type                   AIR_JUNCTION
downstream_location             AIR_SPACE
upstream                                Control_Room
downstream                              environment
has_filter                              false
flow_rate
Time    (hr)    Value   (cfm)
720     850
end_flow_rate
X_over_Q_4_ctrl_room
Time    (hr)    Value   (s/m*3)
720     0
end_X_over_Q_4_ctrl_room
X_over_Q_4_site_boundary
Time    (hr)    Value   (s/m*3)
720     0
end_X_over_Q_4_site_boundary
X_over_Q_4_low_population_zone
Time    (hr)    Value   (s/m*3)
```

```
720     0
end_X_over_Q_4_low_population_zone
end_junction

environment
breathing_rate_sb
Time (hr)       Value (cms)
8       0.00035
720     0.0
end_breathing_rate_sb
breathing_rate_lpz
Time (hr)       Value (cms)
8       0.00035
24      0.00018
720     0.00023
end_breathing_rate_lpz
end_environment
```

Output File Excerpts - 720 Hour CR and LPZ TEDE - Unfiltered Inleakage

Control_Room

	thyroid	wbody	skin	CEDE
Total dose:	5.55E+001	9.88E-002	1.84E+000	2.80E+000
Noble gas	0.00E+000	9.31E-002	1.81E+000	0.00E+000
Org iodine	7.95E+000	2.79E-004	2.39E-003	2.45E-001
Elem iodine	6.62E+000	1.13E-003	6.74E-003	2.07E-001
Part iodine	3.90E+001	3.73E-003	2.74E-002	1.22E+000
Cesium	3.71E-001	3.87E-004	0.00E+000	4.13E-001
Tellurium	1.49E+000	1.01E-004	0.00E+000	7.18E-002
Barium	2.77E-003	1.49E-005	0.00E+000	1.10E-002
Noble metal	1.50E-003	1.20E-005	0.00E+000	8.42E-002
Lanthanides	2.50E-004	2.07E-005	0.00E+000	4.70E-002
Cerium	9.46E-005	5.24E-006	0.00E+000	1.62E-001
Strontinum	3.04E-004	5.58E-005	0.00E+000	3.37E-001

environment

	thyroid	wbody	skin	CEDE
EAB dose:	6.15E+001	1.59E+001	2.02E+001	3.12E+000
LPZ dose:	2.69E+001	2.75E+000	2.74E+000	1.17E+000

	thyrd_eab	wbody_eab	skin_eab	CEDE_eab	thyrd_lpz	wbody_lpz	skin_lpz	CEDE_lpz
Noble gas	0.00E+000	1.48E+001	1.99E+001	0.00E+000	0.00E+000	2.61E+000	2.70E+000	0.00E+000
Org iodine	3.62E+000	2.16E-002	1.02E-002	1.13E-001	3.53E+000	3.52E-003	1.60E-003	1.09E-001
Elem iodine	8.55E+000	8.80E-001	2.45E-001	2.74E-001	9.73E+000	9.14E-002	2.57E-002	3.07E-001
Part iodine	4.73E+001	1.47E-001	5.17E-002	1.48E+000	1.30E+001	4.02E-002	1.41E-002	4.09E-001
Cesium	4.46E-001	8.86E-003	0.00E+000	4.97E-001	1.23E-001	2.40E-003	0.00E+000	1.37E-001
Tellurium	1.62E+000	2.41E-003	0.00E+000	7.82E-002	4.48E-001	6.56E-004	0.00E+000	2.16E-002
Barium	2.94E-003	3.22E-004	0.00E+000	1.18E-002	8.14E-004	8.70E-005	0.00E+000	3.27E-003
Noble metal	1.58E-003	2.73E-004	0.00E+000	8.87E-002	4.37E-004	7.39E-005	0.00E+000	2.46E-002
Lanthanides	2.14E-004	1.93E-004	0.00E+000	4.81E-002	5.99E-005	4.62E-005	0.00E+000	1.34E-002
Cerium	1.01E-004	1.10E-004	0.00E+000	1.71E-001	2.80E-005	2.98E-005	0.00E+000	4.74E-002
Strontinum	3.40E-004	1.71E-003	0.00E+000	3.55E-001	9.41E-005	4.68E-004	0.00E+000	9.84E-002

STARDOSE 1.01 (c) 1996-2002 Polestar Applied Technology, Inc.
Thu Jul 01 14:22:36 2004

A calculation was performed to determine whether gamma shine from the control room HVAC intake HEPA filters would result in a significant contribution to the control room dose in the DBA-LOCA scenario.

Approach

It was conservatively assumed that the HEPA filters are 100% efficient (to maximize filter loading) for all of the source term radionuclide species with the exception of noble gases. Noble gas filter efficiency was assumed to be 0%. This is reasonable since no significant filter hold up of noble gas is expected. It is consistent since no credit was taken for noble gas filtration in determining control room dose within the main body of the calculation.

The STARDOSE computer code (Reference 1) was used to quantify the radionuclide loading of the filters over time. This is possible since the STARDOSE output files include a list of the inventory of radionuclides contained in each control volume for each time edit. To simulate the loading of the control room filters, the STARDOSE Input.dat file for the case with 1300 cfm (two-train) continuous operation was altered by changing the control room filter efficiencies to 100% for noble gas and 0% for all other radionuclide species and setting the exhaust flow to the environment to 0 cfm. In effect, the control room (control volume) is modeled to act like the CREF filter. The data output provides the quantities of radionuclides that are present at each time period (amount of filter loading). Decay on the filters is taken into account.

The intake flow was set to 1600 cfm to maximize filter loading; however, the control room X/Q set for a continuous 1300 cfm intake flow (Reference 2, Item 5.1) were used since no X/Qs for a continuous 1600 cfm intake flow were included in the analysis database (i.e., Reference 2). This is acceptable since it may be noted in the summary X/Q tables of Reference 2 (for switching over from two CREF trains to one CREF train between t = 0 and t = 2 hours), that the 1300 cfm X/Q is more conservative than the 1600 cfm X/Q for the dominant Turbine Building pathway (confirmed as dominant by the RADTRAD analysis – see Appendix F of the main body of the calculation).

The modified STARDOSE input.dat file is presented in Addendum A. The inventory file (Libfile1.txt) is the same one that was used in main body of the calculation and is shown in Appendix B of the main body of the calculation. A summary of the "filter inventory" for the control room (control volume) as a function of time taken from the STARDOSE "results.out" file is presented in Addendum B.

MicroShield (Version 5.03) was used calculate gamma dose from exposure to the radionuclides contained in the control room HEPA filter. A MicroShield model was developed using the following information (see Reference 2). The filter is located in a room on the floor above the control room. The filter is 2 ft x 2 ft (61 cm x 61 cm) and it is 11-1/2 inches (29.2 cm) deep in the horizontal direction of flow. The centerline of the filter is at elevation 535 ft 4-3/8 inches. The floor of the control room is at elevation 501 ft, and the dose point was assumed to be 6 ft above that at elevation 507 ft directly below the filter. The top of the concrete floor/control room ceiling is at elevation 525 ft, and the concrete floor is 1 ft (30.5 cm) thick. Therefore, the concrete ceiling of the control room is at 524 ft. Given the above, there is 28 ft 4-3/8 inches (865 cm) from the dose point to the centerline of the filter and 17 ft 6 inches (533.4 cm) from the dose point to the centerline of the concrete shield. From the dose point the filter would be seen as a rectangle 24 inches x 11-1/2 inches (61 cm x 29 cm).

Results

The STARDOSE "filter inventory" (Addendum B) for each time period was imported into the MicroShield model and executed. Effective dose equivalent rates for an isotropic receptor were calculated. The average dose rates over each time interval were multiplied by the respective time interval and summed to obtain an "integrated dose" for 720 hours. The results are shown in Table 1, Filter Shine Dose Summary.

Table 1. Filter Shine Dose Summary

Time (hrs)	DR - Isotropic Eff Dose Equiv Rate at 8.65 meters (filter C/L to 507' Level) (mrem/hr)	Average DR $(DR_i + DR_{i+1})/2$	Time Interval $T_{i+1} - T_i$	Dose (mrem) $(DR_i + DR_{i+1})/2 \times (T_{i+1} - T_i)$	
0.00	0.000E+00	-	-	-	
0.25	8.20E-02	4.10E-02	0.25	1.03E-02	
0.50	1.66E-01	1.24E-01	0.25	3.10E-02	
0.75	2.10E-01	1.88E-01	0.25	4.70E-02	
1.00	2.60E-01	2.35E-01	0.25	5.87E-02	
1.25	3.06E-01	2.83E-01	0.25	7.08E-02	
1.50	3.49E-01	3.27E-01	0.25	8.19E-02	
1.75	3.85E-01	3.67E-01	0.25	9.17E-02	
2.00	4.20E-01	4.03E-01	0.25	1.01E-01	
2.25	4.14E-01	4.17E-01	0.25	1.04E-01	
2.50	4.00E-01	4.07E-01	0.25	1.02E-01	
2.75	3.87E-01	3.94E-01	0.25	9.84E-02	
3.00	3.76E-01	3.82E-01	0.25	9.54E-02	
3.25	3.66E-01	3.71E-01	0.25	9.27E-02	
3.50	3.56E-01	3.61E-01	0.25	9.01E-02	
3.75	3.47E-01	3.51E-01	0.25	8.78E-02	
4.00	3.40E-01	3.43E-01	0.25	8.58E-02	
8.00	2.56E-01	2.98E-01	4.00	1.19E+00	
24.00	1.23E-01	1.89E-01	16.00	3.03E+00	
48.00	8.22E-02	1.02E-01	24.00	2.46E+00	
96.00	6.35E-02	7.29E-02	48.00	3.50E+00	
240.00	4.47E-02	5.41E-02	144.00	7.79E+00	
720.00	2.55E-02	3.51E-02	480.00	1.69E+01	
		Integrated Dose		**3.61E+01**	**mrem**

Conclusions

The dose contribution from filter shine is negligible. The "integrated" dose of 36.1 mrem is only 1.0 % of the calculated TEDE control room dose (3.44 rem) for the case of "Minimum Flow – Single Failure

of One CREF to Start" despite its conservative assumptions. In addition, other elements that would further reduce the CREF filter shine dose contribution were not taken into consideration:

- Occupancy - No credit was taken for an occupancy factor
- Location - Receptor was assumed to be continuously positioned at the highest dose rate location

Independent Verification

Independent verification of the MicroShield analysis is provided in Addendum C.

Attachment 3 References

1. STARDOSE Version 1.01, PSAT CI09.03, Rev. 0, "Stardose Model Report", January 31, 1997
2. "Dose Calculation Data Base", NE-02-04-1, Revision 1

STARDOSE Input.dat file

- Filter efficiency -100% for noble gas,
- Filter efficiency - 0% for all other radionuclide species,
- Intake flow to the control room set to 1600 cfm
- Conservative X/Q set for continuous 1300 cfm intake flow to the control room
- Exhaust flow to the environment to 0 cfm

```
edit_time
0.0 0.25 0.5 0.75 1.0 1.25 1.5 1.75 2.0 2.25 2.5 2.75 3.0 3.25 3.5 3.75 4.0 8.0 24.0 48.0 96.0 240.0 720.0
end_edit_time

participating_isotopes
Kr83m   Kr85m   Kr85    Kr87    Kr88    Kr89
Xe131m  Xe133m  Xe133   Xe135m  Xe135   Xe137   Xe138
I131Org I131Elem        I131Part
I132Org I132Elem        I132Part
I133Org I133Elem        I133Part
I134Org I134Elem        I134Part
I135Org I135Elem        I135Part
Rb86    Cs134   Cs136   Cs137
Sb127   Sb129   Te127m  Te127   Te129m  Te129   Te131m  Te132
Ba137m  Ba139   Ba140
Mo99    Tc99m   Ru103   Ru105   Ru106   Rh105
Y90     Y91     Y92     Y93     Zr95    Zr97    Nb95
La140   La141   La142   Pr143   Nd147   Am241   Cm242   Cm244
Ce141   Ce143   Ce144   Np239   Pu238   Pu239   Pu240   Pu241
Sr89    Sr90    Sr91    Sr92
end_participating_isotopes

core
thermal_power                   3556
elemental_iodine_frac           0.0485
organic_iodine_frac             0.0015
particulate_iodine_frac                 0.95
release_frac
to_control_volume DW
Time N_Gas I_Grp CsGrp TeGrp BaGrp NMtls CeGrp LaGrp SrGrp
0.033   0       0       0       0       0       0       0       0       0
0.533   0.1     0.1     0.1     0       0       0       0       0       0
2.033   0.633   0.167   0.133   0.033   0.0133  0.00167 0.00033 0.00013 0.0133
720     0       0       0       0       0       0       0       0       0
end_to_control_volume
to_control_volume SP
Time N_Gas I_Grp CsGrp TeGrp BaGrp NMtls CeGrp LaGrp SrGrp
0.033   0       0       0       0       0       0       0       0       0
0.533   0       0.2     0       0       0       0       0       0       0
2.033   0       0.334   0       0       0       0       0       0       0
720     0       0       0       0       0       0       0       0       0
end_to_control_volume
end_release_frac
end_core

control_volume
obj_type                                OBJ_CV
name                                    DW
air_volume                              2.0054e+005
water_volume                    0
surface_area                    1
has_recirc_filter                       false
removal_rate_to_surface
Time    NobleGas        ElemIodine      OrgIodine       PartIodine      Solubles        Insolubles
0.25    0.00    0.001   0.00    0.001   0.001   0.001
2.44    0.00    6.20    0.00    6.20    6.20    6.20
24.00   0.00    0.62    0.00    0.62    0.62    0.62
720.0   0.00    0.00    0.00    0.00    0.00    0.00
```

```
end_removal_rate_to_surface
frac_4_daughter_resusp_from_surface
Time    NobleGas        ElemIodine      OrgIodine       PartIodine      Solubles        Insolubles
720     1       0       0       0       0       0
end_frac_4_daughter_resusp_from_surface
end_control_volume

control_volume
obj_type                                OBJ_CV
name                                    WW
air_volume                              1.442e+005
water_volume                            1.373e+005
surface_area                            0
has_recirc_filter                       false
removal_rate_to_waterpool
Time    NobleGas        ElemIodine      OrgIodine       PartIodine      Solubles        Insolubles
720     0       0       0       0       0       0
end_removal_rate_to_waterpool
frac_4_daughter_resusp_from_water
Time    NobleGas        ElemIodine      OrgIodine       PartIodine      Solubles        Insolubles
720     0       0       0       0       0       0
end_frac_4_daughter_resusp_from_water
decontamination_factor
Time    NobleGas        ElemIodine      OrgIodine       PartIodine      Solubles        Insolubles
720     1       1       1       1       1       1
end_decontamination_factor
end_control_volume

control_volume
obj_type                                OBJ_CV
name                                    RB
air_volume                              5000
water_volume                            0
surface_area                            0
has_recirc_filter                       false
end_control_volume

control_volume
obj_type                                OBJ_CV
name                                    SP
air_volume                              1.373e+005
water_volume                            0
surface_area                            0
has_recirc_filter                       false
end_control_volume

control_volume
obj_type                                OBJ_CR
name                                    Control_Room
air_volume                              2.14e+005
water_volume                            0
surface_area                            0
has_recirc_filter                       false
breathing_rate
Time    (hr)    Value   (cms)
720             0.00035
end_breathing_rate
occupancy_factor
Time    (hr)    Value   (frac)
24              1
96              0.6
720             0.4
end_occupancy_factor
end_control_volume

junction
junction_type                   AIR_JUNCTION
downstream_location             AIR_SPACE
upstream                                CORE
downstream                              DW
has_filter                              false
```

```
flow_rate
Time    (hr)    Value   (cfm)
720             1
end_flow_rate
end_junction

junction
junction_type                   AIR_JUNCTION
downstream_location             AIR_SPACE
upstream                                CORE
downstream                              SP
has_filter                              false
flow_rate
Time    (hr)    Value   (cfm)
720             1
end_flow_rate
end_junction

junction
junction_type                   AIR_JUNCTION
downstream_location             WATER_POOL
upstream                                DW
downstream                              WW
has_filter                              false
flow_rate
Time    (hr)    Value   (cfm)
2.033           0
720             1.442e5
end_flow_rate
end_junction

junction
junction_type                   AIR_JUNCTION
downstream_location             AIR_SPACE
upstream                                WW
downstream                              DW
has_filter                              false
flow_rate
Time    (hr)    Value   (cfm)
2.033           0
720             1.442e5
end_flow_rate
end_junction

junction
junction_type                   AIR_JUNCTION
downstream_location             AIR_SPACE
upstream                                DW
downstream                              environment
has_filter                              false
flow_rate
Time    (hr)    Value   (cfm)
24      0.1384
720     0.0692
end_flow_rate
X_over_Q_4_ctrl_room
Time    (hr)    Value   (s/m*3)
2       5.42e-4
8       2.31e-4
24      1.19e-4
96      9.24e-5
720     8.87e-5
end_X_over_Q_4_ctrl_room
X_over_Q_4_site_boundary
Time    (hr)    Value   (s/m*3)
720     1.81e-4
end_X_over_Q_4_site_boundary
X_over_Q_4_low_population_zone
Time    (hr)    Value   (s/m*3)
8       4.95e-5
24      3.69e-5
```

```
96      1.95e-5
720     7.81e-6
end_X_over_Q_4_low_population_zone
end_junction

junction
junction_type                   AIR_JUNCTION
downstream_location             AIR_SPACE
upstream                                DW
downstream                              environment
has_filter                              true
flow_rate
Time    (hr)    Value   (cfm)
24      0.4152
720     0.2076
end_flow_rate
filter_efficiency
Time    NobleGas        ElemIodine      OrgIodine       PartIodine      Solubles        Insolubles
720     0               0.427           0.001           0.897           0.897           0.897
end_filter_efficiency
frac_4_daughter_resusp
Time    NobleGas        ElemIodine      OrgIodine       PartIodine      Solubles        Insolubles
720     1       0       0       0       0       0
end_frac_4_daughter_resusp
X_over_Q_4_ctrl_room
Time    (hr)    Value   (s/m*3)
2       5.42e-4
8       2.31e-4
24      1.19e-4
96      9.24e-5
720     8.87e-5
end_X_over_Q_4_ctrl_room
X_over_Q_4_site_boundary
Time    (hr)    Value   (s/m*3)
720     1.81e-4
end_X_over_Q_4_site_boundary
X_over_Q_4_low_population_zone
Time    (hr)    Value   (s/m*3)
8       4.95e-5
24      3.69e-5
96      1.95e-5
720     7.81e-6
end_X_over_Q_4_low_population_zone
end_junction

junction
junction_type                   AIR_JUNCTION
downstream_location             AIR_SPACE
upstream                                DW
downstream                              RB
has_filter                              false
flow_rate
Time    (hr)    Value   (cfm)
0.333           0
24              0.696
720             0.348
end_flow_rate
end_junction

junction
junction_type                   AIR_JUNCTION
downstream_location             AIR_SPACE
upstream                                WW
downstream                              RB
has_filter                              false
flow_rate
Time (hr) Value (cfm)
0.333           0
24              0.5
720             0.25
end_flow_rate
```

```
end_junction

junction
junction_type                   AIR_JUNCTION
downstream_location             AIR_SPACE
upstream                                DW
downstream                              environment
has_filter                              false
flow_rate
Time    (hr)    Value   (cfm)
0.333           0.752
24              0.056
720             0.028
end_flow_rate
X_over_Q_4_ctrl_room
Time    (hr)    Value   (s/m*3)
2       3.08E-4
8       2.36E-4
24      9.52E-5
96      8.07E-5
720     6.97E-5
end_X_over_Q_4_ctrl_room
X_over_Q_4_site_boundary
Time    (hr)    Value   (s/m*3)
720     1.81e-4
end_X_over_Q_4_site_boundary
X_over_Q_4_low_population_zone
Time    (hr)    Value   (s/m*3)
8       4.95e-5
24      3.69e-5
96      1.95e-5
720     7.81e-6
end_X_over_Q_4_low_population_zone
end_junction

junction
junction_type                   AIR_JUNCTION
downstream_location             AIR_SPACE
upstream                                WW
downstream                              environment
has_filter                              false
flow_rate
Time (hr) Value (cfm)
0.333           0.541
24              0.04
720             0.02
end_flow_rate
X_over_Q_4_ctrl_room
Time    (hr)    Value   (s/m*3)
2       3.08E-4
8       2.36E-4
24      9.52E-5
96      8.07E-5
720     6.97E-5
end_X_over_Q_4_ctrl_room
X_over_Q_4_site_boundary
Time    (hr)    Value   (s/m*3)
720     1.81e-4
end_X_over_Q_4_site_boundary
X_over_Q_4_low_population_zone

Time    (hr)    Value   (s/m*3)
8       4.95e-5
24      3.69e-5
96      1.95e-5
720     7.81e-6
end_X_over_Q_4_low_population_zone
end_junction

junction
junction_type                   AIR_JUNCTION
```

```
downstream_location                AIR_SPACE
upstream                                SP
downstream                              RB
has_filter                              true
flow_rate
Time    (hr)    Value   (cfm)
0.25    0
720     0.268
end_flow_rate
filter_efficiency
Time    NobleGas        ElemIodine      OrgIodine       PartIodine      Solubles        Insolubles
720     0.5     0       0       0.99999 0       0
end_filter_efficiency
end_junction

junction
junction_type                   AIR_JUNCTION
downstream_location             AIR_SPACE
upstream                                RB
downstream                              environment
has_filter                              true
flow_rate
Time    (hr)    Value   (cfm)
720     5000
end_flow_rate
filter_efficiency
Time    NobleGas        ElemIodine      OrgIodine       PartIodine      Solubles        Insolubles
0.333   0       0       0       0       0       0

720     0       0.98    0.98    0.98    0.98    0.98    0.98
end_filter_efficiency
frac_4_daughter_resusp
Time    NobleGas        ElemIodine      OrgIodine       PartIodine      Solubles        Insolubles
720     1       1       0       0       0       0
end_frac_4_daughter_resusp
X_over_Q_4_ctrl_room
Time    (hr)    Value   (s/m*3)
0.333   3.08E-4
2       1.56E-4
8       1.15E-4
24      4.51E-5
96      3.83E-5
720     3.30E-5
end_X_over_Q_4_ctrl_room
X_over_Q_4_site_boundary
Time    (hr)    Value   (s/m*3)
720     1.81e-4
end_X_over_Q_4_site_boundary
X_over_Q_4_low_population_zone
Time    (hr)    Value   (s/m*3)
8       4.95e-5
24      3.69e-5
96      1.95e-5
720     7.81e-6
end_X_over_Q_4_low_population_zone
end_junction

junction
junction_type                   AIR_JUNCTION
downstream_location             AIR_SPACE
upstream                                environment
downstream                              Control_Room
has_filter                              true
flow_rate
Time    (hr)    Value   (cfm)
0.5     1600
720     1600
end_flow_rate
filter_efficiency
Time    NobleGas        ElemIodine      OrgIodine       PartIodine      Solubles        Insolubles
720     1       0.00    0.00    0.00    0.00    0.00
```

```
end_filter_efficiency
frac_4_daughter_resusp
Time    NobleGas        ElemIodine      OrgIodine       PartIodine      Solubles        Insolubles
720     0       0       0       0       0
end_frac_4_daughter_resusp
end_junction

junction
junction_type                   AIR_JUNCTION
downstream_location             AIR_SPACE
upstream                                Control_Room
downstream                              environment
has_filter                              false
flow_rate
Time    (hr)    Value   (cfm)
0.5     0
720     0
end_flow_rate
X_over_Q_4_ctrl_room
Time    (hr)    Value   (s/m*3)
720     0
end_X_over_Q_4_ctrl_room
X_over_Q_4_site_boundary
Time    (hr)    Value   (s/m*3)
720     0
end_X_over_Q_4_site_boundary
X_over_Q_4_low_population_zone
Time    (hr)    Value   (s/m*3)
720     0
end_X_over_Q_4_low_population_zone
end_junction

environment
breathing_rate_sb
Time (hr)       Value (cms)
8       0.00035
720     0.0
end_breathing_rate_sb
breathing_rate_lpz
Time (hr)       Value (cms)
8       0.00035
24      0.00018
720     0.00023
end_breathing_rate_lpz
end_environment
```

STARDOSE "Filter Inventory" for the control room (control volume)

Time (hr)	0.00	0.25	0.50	0.75	1.00	1.25	1.50	1.75
	Ci	Ci	Ci	Ci	Ci	Ci	Ci	Ci
Am241	0.00E+00	0.00E+00	0.00E+00	1.48E-09	4.78E-09	8.47E-09	1.22E-08	1.60E-08
Ba137m	0.00E+00	2.71E-03	6.72E-03	8.95E-03	1.14E-02	1.40E-02	1.65E-02	1.91E-02
Ba139	0.00E+00	0.00E+00	0.00E+00	6.41E-04	1.82E-03	2.85E-03	3.64E-03	4.21E-03
Ba140	0.00E+00	0.00E+00	0.00E+00	9.04E-04	2.91E-03	5.16E-03	7.45E-03	9.76E-03
Ce141	0.00E+00	0.00E+00	0.00E+00	2.17E-05	7.00E-05	1.24E-04	1.79E-04	2.35E-04
Ce143	0.00E+00	0.00E+00	0.00E+00	1.93E-05	6.20E-05	1.09E-04	1.57E-04	2.05E-04
Ce144	0.00E+00	0.00E+00	0.00E+00	1.59E-05	5.14E-05	9.11E-05	1.32E-04	1.72E-04
Cm242	0.00E+00	0.00E+00	0.00E+00	3.36E-07	1.08E-06	1.92E-06	2.78E-06	3.64E-06
Cm244	0.00E+00	0.00E+00	0.00E+00	2.72E-08	8.78E-08	1.56E-07	2.25E-07	2.95E-07
Cs134	0.00E+00	3.91E-03	8.53E-03	1.13E-02	1.44E-02	1.76E-02	2.07E-02	2.39E-02
Cs136	0.00E+00	8.67E-04	1.89E-03	2.50E-03	3.19E-03	3.88E-03	4.58E-03	5.28E-03
Cs137	0.00E+00	3.15E-03	6.87E-03	9.12E-03	1.16E-02	1.41E-02	1.67E-02	1.93E-02
I131 *	0.00E+00	1.77E-02	3.93E-02	5.38E-02	7.17E-02	9.04E-02	1.09E-01	1.28E-01
I132 *	0.00E+00	2.32E-02	4.79E-02	6.11E-02	7.63E-02	9.07E-02	1.04E-01	1.15E-01
I133 *	0.00E+00	3.42E-02	7.55E-02	1.03E-01	1.36E-01	1.69E-01	2.04E-01	2.38E-01
I134 *	0.00E+00	3.12E-02	5.69E-02	6.38E-02	6.97E-02	7.19E-02	7.12E-02	6.85E-02
I135 *	0.00E+00	3.11E-02	6.74E-02	9.01E-02	1.17E-01	1.44E-01	1.70E-01	1.94E-01
Kr83m	0.00E+00	0.00E+00	0.00E+00	0.00E+00	0.00E+00	0.00E+00	0.00E+00	0.00E+00
Kr85	0.00E+00	0.00E+00	0.00E+00	0.00E+00	0.00E+00	0.00E+00	0.00E+00	0.00E+00
Kr85m	0.00E+00	0.00E+00	0.00E+00	0.00E+00	0.00E+00	0.00E+00	0.00E+00	0.00E+00
Kr87	0.00E+00	0.00E+00	0.00E+00	0.00E+00	0.00E+00	0.00E+00	0.00E+00	0.00E+00
Kr88	0.00E+00	0.00E+00	0.00E+00	0.00E+00	0.00E+00	0.00E+00	0.00E+00	0.00E+00
Kr89	0.00E+00	0.00E+00	0.00E+00	0.00E+00	0.00E+00	0.00E+00	0.00E+00	0.00E+00
La140	0.00E+00	0.00E+00	0.00E+00	1.11E-05	4.29E-05	8.77E-05	1.43E-04	2.08E-04
La141	0.00E+00	0.00E+00	0.00E+00	7.37E-06	2.27E-05	3.85E-05	5.33E-05	6.68E-05
La142	0.00E+00	0.00E+00	0.00E+00	5.73E-06	1.65E-05	2.61E-05	3.37E-05	3.94E-05
Mo99	0.00E+00	0.00E+00	0.00E+00	1.21E-04	3.88E-04	6.86E-04	9.89E-04	1.29E-03
Nb95	0.00E+00	0.00E+00	0.00E+00	8.24E-06	2.66E-05	4.71E-05	6.81E-05	8.92E-05
Nd147	0.00E+00	0.00E+00	0.00E+00	3.30E-06	1.06E-05	1.88E-05	2.72E-05	3.56E-05
Np239	0.00E+00	0.00E+00	0.00E+00	3.41E-04	1.09E-03	1.93E-03	2.79E-03	3.64E-03
Pr143	0.00E+00	0.00E+00	0.00E+00	7.30E-06	2.35E-05	4.17E-05	6.03E-05	7.90E-05
Pu238	0.00E+00	0.00E+00	0.00E+00	4.69E-08	1.51E-07	2.68E-07	3.87E-07	5.07E-07
Pu239	0.00E+00	0.00E+00	0.00E+00	9.27E-09	2.99E-08	5.30E-08	7.66E-08	1.00E-07
Pu240	0.00E+00	0.00E+00	0.00E+00	1.52E-08	4.92E-08	8.72E-08	1.26E-07	1.65E-07
Pu241	0.00E+00	0.00E+00	0.00E+00	4.34E-06	1.40E-05	2.48E-05	3.59E-05	4.70E-05
Rb86	0.00E+00	2.79E-05	6.08E-05	8.06E-05	1.03E-04	1.25E-04	1.48E-04	1.70E-04
Rh105	0.00E+00	0.00E+00	0.00E+00	8.02E-05	2.58E-04	4.56E-04	6.58E-04	8.59E-04
Ru103	0.00E+00	0.00E+00	0.00E+00	1.17E-04	3.76E-04	6.66E-04	9.63E-04	1.26E-03
Ru105	0.00E+00	0.00E+00	0.00E+00	7.66E-05	2.38E-04	4.06E-04	5.65E-04	7.12E-04
Ru106	0.00E+00	0.00E+00	0.00E+00	5.06E-05	1.63E-04	2.89E-04	4.18E-04	5.48E-04
Sb127	0.00E+00	0.00E+00	0.00E+00	1.61E-04	5.19E-04	9.19E-04	1.33E-03	1.73E-03
Sb129	0.00E+00	0.00E+00	0.00E+00	4.13E-04	1.28E-03	2.18E-03	3.03E-03	3.81E-03
Sr89	0.00E+00	0.00E+00	0.00E+00	3.99E-04	1.29E-03	2.28E-03	3.30E-03	4.32E-03
Sr90	0.00E+00	0.00E+00	0.00E+00	6.60E-05	2.13E-04	3.77E-04	5.45E-04	7.15E-04
Sr91	0.00E+00	0.00E+00	0.00E+00	4.85E-04	1.53E-03	2.67E-03	3.80E-03	4.88E-03
Sr92	0.00E+00	0.00E+00	0.00E+00	4.89E-04	1.48E-03	2.45E-03	3.32E-03	4.07E-03
Tc99m	0.00E+00	0.00E+00	0.00E+00	1.01E-04	3.22E-04	5.65E-04	8.10E-04	1.05E-03
Te127	0.00E+00	0.00E+00	0.00E+00	1.55E-04	4.97E-04	8.74E-04	1.25E-03	1.63E-03
Te127m	0.00E+00	0.00E+00	0.00E+00	2.28E-05	7.36E-05	1.31E-04	1.89E-04	2.47E-04
Te129	0.00E+00	0.00E+00	0.00E+00	3.17E-04	9.90E-04	1.70E-03	2.37E-03	3.00E-03
Te129m	0.00E+00	0.00E+00	0.00E+00	6.81E-05	2.20E-04	3.89E-04	5.63E-04	7.37E-04
Te131m	0.00E+00	0.00E+00	0.00E+00	2.02E-04	6.49E-04	1.14E-03	1.64E-03	2.14E-03
Te132	0.00E+00	0.00E+00	0.00E+00	1.94E-03	6.25E-03	1.11E-02	1.60E-02	2.08E-02
Xe131m	0.00E+00	0.00E+00	0.00E+00	0.00E+00	0.00E+00	0.00E+00	0.00E+00	0.00E+00
Xe133	0.00E+00	1.27E-05	8.93E-05	1.99E-04	3.47E-04	5.35E-04	7.65E-04	1.03E-03
Xe133m	0.00E+00	0.00E+00	0.00E+00	0.00E+00	0.00E+00	0.00E+00	0.00E+00	0.00E+00
Xe135	0.00E+00	1.58E-04	1.10E-03	2.40E-03	4.11E-03	6.24E-03	8.75E-03	1.16E-02
Xe135m	0.00E+00	0.00E+00	0.00E+00	0.00E+00	0.00E+00	0.00E+00	0.00E+00	0.00E+00
Xe137	0.00E+00	0.00E+00	0.00E+00	0.00E+00	0.00E+00	0.00E+00	0.00E+00	0.00E+00
Xe138	0.00E+00	0.00E+00	0.00E+00	0.00E+00	0.00E+00	0.00E+00	0.00E+00	0.00E+00
Y90	0.00E+00	0.00E+00	0.00E+00	4.88E-07	1.90E-06	3.91E-06	6.41E-06	9.37E-06
Y91	0.00E+00	0.00E+00	0.00E+00	5.30E-06	1.72E-05	3.07E-05	4.46E-05	5.87E-05
Y92	0.00E+00	0.00E+00	0.00E+00	1.79E-05	9.59E-05	2.26E-04	3.93E-04	5.89E-04
Y93	0.00E+00	0.00E+00	0.00E+00	6.53E-06	2.07E-05	3.61E-05	5.13E-05	6.60E-05
Zr95	0.00E+00	0.00E+00	0.00E+00	8.24E-06	2.66E-05	4.71E-05	6.81E-05	8.92E-05
Zr97	0.00E+00	0.00E+00	0.00E+00	8.11E-06	2.59E-05	4.54E-05	6.50E-05	8.43E-05

* Sum of organic, elemental and particulate iodine

STARDOSE "Filter Inventory" for the control room (control volume)

Time (hr)	2.00	2.25	2.50	2.75	3.00	3.25	3.50	3.75
	Ci	Ci	Ci	Ci	Ci	Ci	Ci	Ci
Am241	1.98E-08	2.08E-08	2.12E-08	2.15E-08	2.17E-08	2.20E-08	2.22E-08	2.24E-08
Ba137m	2.16E-02	2.25E-02	2.28E-02	2.29E-02	2.31E-02	2.33E-02	2.34E-02	2.35E-02
Ba139	4.59E-03	4.26E-03	3.82E-03	3.42E-03	3.05E-03	2.72E-03	2.42E-03	2.16E-03
Ba140	1.21E-02	1.27E-02	1.29E-02	1.31E-02	1.32E-02	1.33E-02	1.34E-02	1.36E-02
Ce141	2.90E-04	3.05E-04	3.11E-04	3.15E-04	3.18E-04	3.21E-04	3.24E-04	3.27E-04
Ce143	2.52E-04	2.63E-04	2.67E-04	2.69E-04	2.70E-04	2.72E-04	2.73E-04	2.74E-04
Ce144	2.13E-04	2.24E-04	2.28E-04	2.31E-04	2.34E-04	2.36E-04	2.39E-04	2.41E-04
Cm242	4.50E-06	4.73E-06	4.81E-06	4.87E-06	4.93E-06	4.98E-06	5.03E-06	5.07E-06
Cm244	3.65E-07	3.83E-07	3.90E-07	3.95E-07	4.00E-07	4.04E-07	4.08E-07	4.11E-07
Cs134	2.71E-02	2.79E-02	2.83E-02	2.85E-02	2.87E-02	2.89E-02	2.91E-02	2.92E-02
Cs136	5.98E-03	6.16E-03	6.23E-03	6.28E-03	6.32E-03	6.36E-03	6.39E-03	6.42E-03
Cs137	2.18E-02	2.25E-02	2.28E-02	2.29E-02	2.31E-02	2.33E-02	2.34E-02	2.35E-02
I131 *	1.48E-01	1.53E-01	1.54E-01	1.56E-01	1.57E-01	1.59E-01	1.60E-01	1.61E-01
I132 *	1.26E-01	1.24E-01	1.20E-01	1.16E-01	1.12E-01	1.09E-01	1.05E-01	1.02E-01
I133 *	2.71E-01	2.78E-01	2.80E-01	2.81E-01	2.81E-01	2.82E-01	2.81E-01	2.81E-01
I134 *	6.45E-02	5.46E-02	4.53E-02	3.74E-02	3.10E-02	2.56E-02	2.11E-02	1.74E-02
I135 *	2.18E-01	2.20E-01	2.17E-01	2.14E-01	2.11E-01	2.07E-01	2.04E-01	2.00E-01
Kr83m	0.00E+00	0.00E+00	0.00E+00	0.00E+00	0.00E+00	0.00E+00	0.00E+00	0.00E+00
Kr85	0.00E+00	0.00E+00	0.00E+00	0.00E+00	0.00E+00	0.00E+00	0.00E+00	0.00E+00
Kr85m	0.00E+00	0.00E+00	0.00E+00	0.00E+00	0.00E+00	0.00E+00	0.00E+00	0.00E+00
Kr87	0.00E+00	0.00E+00	0.00E+00	0.00E+00	0.00E+00	0.00E+00	0.00E+00	0.00E+00
Kr88	0.00E+00	0.00E+00	0.00E+00	0.00E+00	0.00E+00	0.00E+00	0.00E+00	0.00E+00
Kr89	0.00E+00	0.00E+00	0.00E+00	0.00E+00	0.00E+00	0.00E+00	0.00E+00	0.00E+00
La140	2.83E-04	3.43E-04	4.01E-04	4.59E-04	5.17E-04	5.76E-04	6.35E-04	6.95E-04
La141	7.90E-05	7.94E-05	7.73E-05	7.49E-05	7.25E-05	7.01E-05	6.77E-05	6.53E-05
La142	4.35E-05	4.08E-05	3.71E-05	3.36E-05	3.03E-05	2.74E-05	2.47E-05	2.22E-05
Mo99	1.59E-03	1.67E-03	1.70E-03	1.71E-03	1.73E-03	1.74E-03	1.76E-03	1.77E-03
Nb95	1.10E-04	1.16E-04	1.18E-04	1.20E-04	1.21E-04	1.22E-04	1.23E-04	1.24E-04
Nd147	4.40E-05	4.62E-05	4.70E-05	4.76E-05	4.81E-05	4.86E-05	4.90E-05	4.94E-05
Np239	4.49E-03	4.70E-03	4.77E-03	4.82E-03	4.86E-03	4.90E-03	4.93E-03	4.96E-03
Pr143	9.78E-05	1.03E-04	1.05E-04	1.06E-04	1.08E-04	1.09E-04	1.10E-04	1.11E-04
Pu238	6.28E-07	6.59E-07	6.71E-07	6.80E-07	6.88E-07	6.95E-07	7.02E-07	7.08E-07
Pu239	1.24E-07	1.30E-07	1.33E-07	1.34E-07	1.36E-07	1.37E-07	1.39E-07	1.40E-07
Pu240	2.04E-07	2.14E-07	2.18E-07	2.21E-07	2.24E-07	2.26E-07	2.28E-07	2.30E-07
Pu241	5.81E-05	6.10E-05	6.22E-05	6.30E-05	6.37E-05	6.44E-05	6.50E-05	6.55E-05
Rb86	1.93E-04	1.98E-04	2.01E-04	2.02E-04	2.04E-04	2.05E-04	2.06E-04	2.07E-04
Rh105	1.06E-03	1.11E-03	1.13E-03	1.14E-03	1.15E-03	1.16E-03	1.17E-03	1.18E-03
Ru103	1.56E-03	1.64E-03	1.67E-03	1.69E-03	1.71E-03	1.73E-03	1.74E-03	1.76E-03
Ru105	8.48E-04	8.58E-04	8.41E-04	8.20E-04	7.99E-04	7.77E-04	7.56E-04	7.34E-04
Ru106	6.78E-04	7.12E-04	7.25E-04	7.34E-04	7.43E-04	7.51E-04	7.58E-04	7.64E-04
Sb127	2.14E-03	2.24E-03	2.28E-03	2.31E-03	2.33E-03	2.35E-03	2.37E-03	2.38E-03
Sb129	4.53E-03	4.57E-03	4.47E-03	4.35E-03	4.23E-03	4.11E-03	3.99E-03	3.87E-03
Sr89	5.34E-03	5.61E-03	5.71E-03	5.78E-03	5.85E-03	5.91E-03	5.97E-03	6.02E-03
Sr90	8.84E-04	9.28E-04	9.45E-04	9.58E-04	9.69E-04	9.79E-04	9.88E-04	9.97E-04
Sr91	5.93E-03	6.12E-03	6.12E-03	6.09E-03	6.05E-03	6.00E-03	5.95E-03	5.89E-03
Sr92	4.71E-03	4.64E-03	4.42E-03	4.19E-03	3.97E-03	3.76E-03	3.56E-03	3.36E-03
Tc99m	1.29E-03	1.35E-03	1.39E-03	1.41E-03	1.44E-03	1.46E-03	1.48E-03	1.50E-03
Te127	2.00E-03	2.10E-03	2.14E-03	2.16E-03	2.19E-03	2.22E-03	2.24E-03	2.26E-03
Te127m	3.06E-04	3.21E-04	3.27E-04	3.31E-04	3.35E-04	3.39E-04	3.42E-04	3.45E-04
Te129	3.58E-03	3.82E-03	3.96E-03	4.06E-03	4.12E-03	4.16E-03	4.18E-03	4.18E-03
Te129m	9.11E-04	9.57E-04	9.74E-04	9.87E-04	9.98E-04	1.01E-03	1.02E-03	1.03E-03
Te131m	2.63E-03	2.75E-03	2.78E-03	2.80E-03	2.82E-03	2.83E-03	2.84E-03	2.85E-03
Te132	2.57E-02	2.70E-02	2.74E-02	2.77E-02	2.80E-02	2.82E-02	2.84E-02	2.86E-02
Xe131m	0.00E+00	0.00E+00	0.00E+00	0.00E+00	0.00E+00	0.00E+00	0.00E+00	0.00E+00
Xe133	1.34E-03	1.68E-03	2.01E-03	2.35E-03	2.69E-03	3.03E-03	3.36E-03	3.69E-03
Xe133m	0.00E+00	0.00E+00	0.00E+00	0.00E+00	0.00E+00	0.00E+00	0.00E+00	0.00E+00
Xe135	1.49E-02	1.82E-02	2.15E-02	2.47E-02	2.77E-02	3.07E-02	3.35E-02	3.62E-02
Xe135m	0.00E+00	0.00E+00	0.00E+00	0.00E+00	0.00E+00	0.00E+00	0.00E+00	0.00E+00
Xe137	0.00E+00	0.00E+00	0.00E+00	0.00E+00	0.00E+00	0.00E+00	0.00E+00	0.00E+00
Xe138	0.00E+00	0.00E+00	0.00E+00	0.00E+00	0.00E+00	0.00E+00	0.00E+00	0.00E+00
Y90	1.28E-05	1.56E-05	1.82E-05	2.09E-05	2.36E-05	2.64E-05	2.91E-05	3.19E-05
Y91	7.30E-05	7.73E-05	7.95E-05	8.12E-05	8.29E-05	8.45E-05	8.60E-05	8.75E-05
Y92	8.07E-04	1.00E-03	1.18E-03	1.33E-03	1.47E-03	1.59E-03	1.70E-03	1.80E-03
Y93	8.02E-05	8.29E-05	8.29E-05	8.26E-05	8.21E-05	8.16E-05	8.10E-05	8.03E-05
Zr95	1.10E-04	1.16E-04	1.18E-04	1.20E-04	1.21E-04	1.22E-04	1.23E-04	1.24E-04
Zr97	1.03E-04	1.07E-04	1.08E-04	1.09E-04	1.09E-04	1.09E-04	1.09E-04	1.08E-04

* Sum of organic, elemental and particulate iodine

STARDOSE "Filter Inventory" for the control room (control volume)

Time (hr)	4.00	8.00	24.00	48.00	96.00	240.00	720.00
	Ci	Ci	Ci	Ci	Ci	Ci	Ci
Am241	2.26E-08	2.40E-08	2.42E-08	2.42E-08	2.42E-08	2.42E-08	2.42E-08
Ba137m	2.37E-02	2.46E-02	2.47E-02	2.47E-02	2.47E-02	2.47E-02	2.47E-02
Ba139	1.92E-03	2.76E-04	9.27E-08	5.64E-13	2.09E-23	1.06E-54	5.16E-159
Ba140	1.37E-02	1.44E-02	1.40E-02	1.33E-02	1.19E-02	8.60E-03	2.92E-03
Ce141	3.30E-04	3.49E-04	3.47E-04	3.40E-04	3.26E-04	2.86E-04	1.86E-04
Ce143	2.74E-04	2.67E-04	1.91E-04	1.13E-04	3.99E-05	1.75E-06	5.24E-11
Ce144	2.43E-04	2.58E-04	2.59E-04	2.59E-04	2.58E-04	2.54E-04	2.43E-04
Cm242	5.11E-06	5.43E-06	5.46E-06	5.44E-06	5.39E-06	5.26E-06	4.84E-06
Cm244	4.15E-07	4.41E-07	4.45E-07	4.44E-07	4.44E-07	4.44E-07	4.44E-07
Cs134	2.94E-02	3.05E-02	3.07E-02	3.07E-02	3.06E-02	3.05E-02	3.00E-02
Cs136	6.45E-03	6.65E-03	6.46E-03	6.13E-03	5.51E-03	4.00E-03	1.38E-03
Cs137	2.37E-02	2.46E-02	2.47E-02	2.47E-02	2.47E-02	2.47E-02	2.47E-02
I131 *	1.62E-01	1.73E-01	1.74E-01	1.68E-01	1.54E-01	1.12E-01	3.16E-02
I132 *	9.94E-02	7.12E-02	3.64E-02	2.79E-02	1.81E-02	4.77E-03	6.25E-05
I133 *	2.81E-01	2.66E-01	1.66E-01	7.87E-02	1.74E-02	1.79E-04	3.40E-11
I134 *	1.44E-02	6.24E-04	1.76E-09	7.90E-18	1.58E-34	1.20E-84	8.43E-252
I135 *	1.97E-01	1.40E-01	2.88E-02	2.55E-03	1.99E-05	8.84E-12	4.81E-33
Kr83m	0.00E+00	0.00E+00	0.00E+00	0.00E+00	0.00E+00	0.00E+00	0.00E+00
Kr85	0.00E+00	0.00E+00	0.00E+00	0.00E+00	0.00E+00	0.00E+00	0.00E+00
Kr85m	0.00E+00	0.00E+00	0.00E+00	0.00E+00	0.00E+00	0.00E+00	0.00E+00
Kr87	0.00E+00	0.00E+00	0.00E+00	0.00E+00	0.00E+00	0.00E+00	0.00E+00
Kr88	0.00E+00	0.00E+00	0.00E+00	0.00E+00	0.00E+00	0.00E+00	0.00E+00
Kr89	0.00E+00	0.00E+00	0.00E+00	0.00E+00	0.00E+00	0.00E+00	0.00E+00
La140	7.55E-04	1.70E-03	4.72E-03	7.72E-03	1.04E-02	9.62E-03	3.36E-03
La141	6.30E-05	3.29E-05	1.93E-06	2.70E-08	5.29E-12	4.00E-23	3.39E-60
La142	2.00E-05	3.46E-06	2.46E-09	4.60E-14	1.61E-23	6.92E-52	1.92E-146
Mo99	1.78E-03	1.81E-03	1.55E-03	1.21E-03	7.36E-04	1.66E-04	1.17E-06
Nb95	1.25E-04	1.33E-04	1.34E-04	1.34E-04	1.34E-04	1.33E-04	1.25E-04
Nd147	4.98E-05	5.24E-05	5.07E-05	4.77E-05	4.22E-05	2.92E-05	8.58E-06
Np239	4.98E-03	5.04E-03	4.17E-03	3.10E-03	1.71E-03	2.87E-04	7.55E-07
Pr143	1.12E-04	1.20E-04	1.25E-04	1.26E-04	1.21E-04	9.20E-05	3.36E-05
Pu238	7.14E-07	7.59E-07	7.65E-07	7.65E-07	7.65E-07	7.66E-07	7.66E-07
Pu239	1.41E-07	1.50E-07	1.51E-07	1.51E-07	1.51E-07	1.51E-07	1.52E-07
Pu240	2.32E-07	2.47E-07	2.49E-07	2.49E-07	2.49E-07	2.49E-07	2.50E-07
Pu241	6.61E-05	7.02E-05	7.08E-05	7.08E-05	7.08E-05	7.08E-05	7.07E-05
Rb86	2.08E-04	2.15E-04	2.11E-04	2.03E-04	1.89E-04	1.51E-04	7.22E-05
Rh105	1.19E-03	1.21E-03	9.34E-04	5.89E-04	2.32E-04	1.41E-05	1.25E-09
Ru103	1.77E-03	1.88E-03	1.87E-03	1.84E-03	1.78E-03	1.60E-03	1.13E-03
Ru105	7.12E-04	4.12E-04	3.66E-05	9.54E-07	6.50E-10	2.05E-19	4.40E-51
Ru106	7.70E-04	8.19E-04	8.25E-04	8.23E-04	8.20E-04	8.11E-04	7.82E-04
Sb127	2.40E-03	2.47E-03	2.22E-03	1.85E-03	1.30E-03	4.43E-04	1.24E-05
Sb129	3.74E-03	2.11E-03	1.67E-04	3.66E-06	1.76E-09	1.97E-19	1.34E-52
Sr89	6.06E-03	6.43E-03	6.43E-03	6.34E-03	6.17E-03	5.68E-03	4.33E-03
Sr90	1.00E-03	1.07E-03	1.08E-03	1.08E-03	1.08E-03	1.08E-03	1.08E-03
Sr91	5.83E-03	4.64E-03	1.47E-03	2.59E-04	8.04E-06	2.40E-10	1.98E-25
Sr92	3.17E-03	1.18E-03	1.79E-05	3.28E-08	1.11E-13	4.30E-30	8.42E-85
Tc99m	1.52E-03	1.70E-03	1.65E-03	1.33E-03	8.09E-04	1.83E-04	1.29E-06
Te127	2.28E-03	2.44E-03	2.37E-03	2.04E-03	1.44E-03	4.93E-04	1.38E-05
Te127m	3.47E-04	3.69E-04	3.71E-04	3.68E-04	3.63E-04	3.49E-04	3.07E-04
Te129	4.15E-03	2.81E-03	2.32E-04	5.09E-06	2.45E-09	2.75E-19	1.86E-52
Te129m	1.03E-03	1.10E-03	1.09E-03	1.07E-03	1.03E-03	9.08E-04	6.05E-04
Te131m	2.86E-03	2.77E-03	1.93E-03	1.11E-03	3.66E-04	1.31E-05	2.00E-10
Te132	2.87E-02	2.95E-02	2.57E-02	2.07E-02	1.34E-02	3.65E-03	4.78E-05
Xe131m	0.00E+00	0.00E+00	0.00E+00	0.00E+00	0.00E+00	0.00E+00	0.00E+00
Xe133	4.03E-03	9.07E-03	2.30E-02	3.14E-02	3.09E-02	1.51E-02	1.09E-03
Xe133m	0.00E+00	0.00E+00	0.00E+00	0.00E+00	0.00E+00	0.00E+00	0.00E+00
Xe135	3.87E-02	6.60E-02	5.48E-02	1.40E-02	4.84E-04	1.03E-08	2.13E-24
Xe135m	0.00E+00	0.00E+00	0.00E+00	0.00E+00	0.00E+00	0.00E+00	0.00E+00
Xe137	0.00E+00	0.00E+00	0.00E+00	0.00E+00	0.00E+00	0.00E+00	0.00E+00
Xe138	0.00E+00	0.00E+00	0.00E+00	0.00E+00	0.00E+00	0.00E+00	0.00E+00
Y90	3.48E-05	8.00E-05	2.38E-04	4.29E-04	6.91E-04	9.96E-04	1.08E-03
Y91	6.89E-05	1.05E-04	1.27E-04	1.34E-04	1.32E-04	1.23E-04	9.72E-05
Y92	1.88E-03	1.96E-03	1.92E-04	2.28E-06	2.29E-10	2.07E-22	1.47E-62
Y93	7.95E-05	6.42E-05	2.16E-05	4.14E-06	1.53E-07	7.65E-12	3.55E-26
Zr95	1.25E-04	1.33E-04	1.33E-04	1.32E-04	1.29E-04	1.21E-04	9.71E-05
Zr97	1.08E-04	9.78E-05	5.14E-05	1.94E-05	2.75E-06	7.66E-09	2.61E-17

* Sum of organic, elemental and particulate iodine

Independent Verification of MicroShield Analysis of Dose Rate for Control Room Emergency Filter

MicroShield 5.03 is not maintained in a fully QA'd status at Polestar. Even though Polestar purchased the QA package for the MicroShield code, the vendor was no longer able to guarantee that the code has been maintained in a controlled manner within the vendor's organization. Accordingly, Polestar will not use MicroShield without independent verification with either QADMOD or a manual calculation. This study is sufficiently simple (and the results have sufficiently large margin) to justify a manual independent verification.

Proprietary Information Removed

this flux is converted to 0.356 mrem/hour, about 85% of the MicroShield 0.417 mrem/hour average over the peak-dose rate 2.00 to 2.25 hour interval. For the purposes of this appendix, this is sufficient confirmation that the MicroShield analysis is acceptable and, subject to a complete check of the MicroShield input and output, that the results of this appendix are acceptable to show that the CREF filter dose rate in the control room is negligible.

Proprietary Information Removed

Proprietary Information Removed