FRAMATOME ANP

BAW-10239(NP)-A
Revision 0
43-10239NPA-00

# Advanced Mark-BW Fuel Assembly Mechanical Design Topical Report

July 2004

Framatome ANP, Inc.

## U.S. Nuclear Regulatory Commission
## Report Disclaimer

### Important Notice Regarding the Contents and Use of This Document

***Please Read Carefully***

This technical report was derived through research and development programs sponsored by Framatome ANP, Inc. It is being submitted by Framatome ANP, Inc. to the U.S. Nuclear Regulatory Commission as part of a technical contribution to facilitate safety analyses by licensees of the U.S. Nuclear Regulatory Commission which utilize Framatome ANP, Inc. fabricated reload fuel or technical services provided by Framatome ANP, Inc. for light water power reactors and it is true and correct to the best of Framatome ANP, Inc.'s knowledge, information, and belief. The information contained herein may be used by the U.S. Nuclear Regulatory Commission in its review of this report and, under the terms of the respective agreements, by licensees or applicants before the U.S. Nuclear Regulatory Commission which are customers of Framatome ANP, Inc. in their demonstration of compliance with the U.S. Nuclear Regulatory Commission's regulations.

Framatome ANP, Inc.'s warranties and representations concerning the subject matter of this document are those set forth in the agreement between Framatome ANP, Inc. and the Customer pursuant to which this document is issued. Accordingly, except as otherwise expressly provided in such agreement, neither Framatome ANP, Inc. nor any person acting on its behalf:

a. makes any warranty, or representation, express or implied, with respect to the accuracy, completeness, or usefulness of the information contained in this document, or that the use of any information, apparatus, method, or process disclosed in this document will not infringe privately owned rights;

or

b. assumes any liabilities with respect to the use of, or for damages resulting from the use of, any information, apparatus, method, or process disclosed in this document.

UNITED STATES
NUCLEAR REGULATORY COMMISSION
WASHINGTON, D.C. 20555-0001

July 1, 2004

Mr. James F. Mallay
Director, Regulatory Affairs
Framatome ANP
3815 Old Forest Road
Lynchburg, VA 24501

SUBJECT: FINAL SAFETY EVALUATION FOR FRAMATOME ANP TOPICAL REPORT BAW-10239(P), REVISION 0, "ADVANCED MARK-BW FUEL ASSEMBLY MECHANICAL DESIGN TOPICAL REPORT" (TAC NO. MB7551)

Dear Mr. Mallay:

On April 30, 2002, as supplemented by letters dated May 9, 2003, February 9 and March 18, 2004, Framatome ANP (FANP) submitted Topical Report (TR) BAW-10239(P), Revision 0, "Advanced Mark-BW Fuel Assembly Mechanical Design Topical Report," to the staff. On March 30, 2004, an NRC draft safety evaluation (SE) regarding our approval of BAW-10239(P) was provided for your review and comments. By letter dated April 23, 2004, FANP commented on the draft SE. The staff's disposition of FANP's comments on the draft SE are discussed in the attachment to the final SE enclosed with this letter

The staff has found that BAW-10239(P), Revision 0, is acceptable for referencing in licensing applications for Westinghouse 3- and 4-loop designed pressurized water reactors with 17 x 17 fuel rod arrays to the extent specified and under the limitations delineated in the TR and in the enclosed SE. The SE defines the basis for acceptance of the TR.

Our acceptance applies only to material provided in the subject TR. We do not intend to repeat our review of the acceptable material described in the TR. When the TR appears as a reference in license applications, our review will ensure that the material presented applies to the specific plant involved. License amendment requests that deviate from this TR will be subject to a plant-specific review in accordance with applicable review standards.

In accordance with the guidance provided on the NRC website, we request that FANP publish accepted proprietary and non-proprietary versions of this TR within three months of receipt of this letter. The accepted versions shall incorporate this letter and the enclosed SE between the title page and the abstract. It must be well indexed such that information is readily located. Also, it must contain historical review information, such as questions and accepted responses, draft SE comments, and original TR pages that were replaced. The accepted version shall include a "-A" (designating accepted) following the TR identification symbol.

If future changes to the NRC's regulatory requirements affect the acceptability of this TR, FANP and/or licensees referencing it will be expected to revise the TR appropriately or justify its continued applicability for subsequent referencing.

Sincerely,

Herbert N. Berkow, Director
Project Directorate IV
Division of Licensing Project Management
Office of Nuclear Reactor Regulation

Project No. 728

Enclosure: Safety Evaluation

UNITED STATES
NUCLEAR REGULATORY COMMISSION
WASHINGTON, D.C. 20555-0001

SAFETY EVALUATION BY THE OFFICE OF NUCLEAR REACTOR REGULATION

BAW-10239(P), REVISION 0, "ADVANCED MARK-BW FUEL ASSEMBLY

MECHANICAL DESIGN TOPICAL REPORT"

FRAMATOME ANP

PROJECT NO. 728

## 1.0 INTRODUCTION

By letter dated April 30, 2002, and supplemental letters dated May 9, 2003, February 9 and March 18, 2004, (References 1 through 4), Framatome ANP (FANP) requested approval of Topical Report (TR) BAW-10239(P), Revision 0, "Advanced Mark-BW Fuel Assembly Mechanical Design Topical Report." Approval would permit licensees with Westinghouse three- and four-loop reactors that use a 17 x 17 fuel rod array to reference the generic TR for use of the FANP Advanced Mark-BW fuel. The FANP Advanced Mark-BW design is an evolution of the Mark-BW fuel design and includes new design features. This TR evaluated the performance of the Advanced Mark-BW fuel design against the design criteria defined in the Standard Review Plan (SRP), Section 4.2, "Fuel System Design" (Reference 5). Additionally, this TR extends the use of the fuel design change process defined in EMF-92-116(P)(A), "Generic Mechanical Design Criteria for PWR Fuel Designs," (Reference 6) using the design criteria defined within this TR for use in evaluating small changes to the Advanced Mark-BW fuel assembly design.

The staff approves use of this TR subject to the following conditions:

(1) This fuel assembly design is approved for use with low enrichment uranium (LEU) fuel, which has been enriched to less than or equal to 5 percent.

(2) The Advanced Mark-BW fuel assembly design is licensed for a maximum fuel rod burnup of 62,000 Megawatt-days/metric ton (MWD/MT).

## 2.0 REGULATORY EVALUATION

Fuel designs must ensure that the reactor core will have appropriate margin to assure that the specified acceptable fuel design limits (SAFDLs) criteria in Title 10 of the *Code of Federal Regulations* (10 CFR) Part 50, Appendix A, General Design Criterion (GDC) 10, *Reactor Design*, are met. Additionally, GDC 27, *Combined Reactivity Control System Capability*, and GDC 35, *Emergency Core Cooling*, require that licensees maintain control rod insertability and core coolability. Loss-of-coolant accident (LOCA) coolability requirements are contained in 10 CFR 50.46. The staff review process for new fuel designs is contained in SRP Section 4.2.

The guidance provided within the SRP forms the basis of the staff's review and ensures that the criteria of 10 CFR 50.46, GDCs 10, 27, and 35 are met.

## 3.0 TECHNICAL EVALUATION

The FANP Advanced Mark-BW fuel assembly design is an evolution of the FANP Mark-BW fuel assembly design and incorporates new design features including: the TRAPPER bottom nozzle, mid-span mixing grids (MSMGs), a floating intermediate grid design, a quick connect/disconnect top nozzle, and use of M5 material for the cladding, structural tubing, and grids.

This TR extends the use of the fuel design change process defined in EMF-92-116(P)(A), using the design criteria defined within this TR for use in evaluating small changes to the Advanced Mark-BW fuel assembly design. The extension of the EMF-92-116(P)(A) methodology to the Advanced Mark-BW fuel assembly design is accomplished by using the fuel design criteria contained in this TR for the Advanced Mark-BW fuel assembly design while using the compliance demonstration method, nuclear design criteria, and inspections and surveillance methods contained in EMF-92-116(P)(A).

The objectives of this fuel system safety review, as described in SRP Section 4.2, are to provide assurance that (1) the fuel system is not damaged as a result of normal operation and anticipated operational occurrences (AOOs), (2) fuel system damage is never so severe as to prevent control rod insertion when it is required, (3) the number of fuel rod failures is not underestimated for postulated accidents, and (4) coolability is always maintained. A fuel system is "not damaged" when fuel rods do not fail, fuel system dimensions remain within operational tolerances, and functional capabilities are not reduced below those assumed in the safety analyses. Fuel rod failure means that the fuel rod leaks and that the first fission product barrier (the cladding) has been breached. Coolability, which is sometimes termed coolable geometry, means that the fuel assembly retains its rod-bundle geometrical configuration with adequate coolant channels to permit removal of residual heat even after an accident.

### 3.1 Fuel Assembly Design

The Advanced Mark-BW fuel assembly design is intended for use in Westinghouse three- and four-loop reactors which use a 17 x 17 fuel rod array. The design is based on the Mark-BW fuel assembly design and incorporates some additional features that have been proved through reactor use such as: the TRAPPER bottom nozzle, MSMGs, a floating intermediate grid design, and a low pressure drop quick connect/disconnect top nozzle. The design also uses the M5 advanced alloy which has been previously approved (Reference 7) for cladding, structural tubing and grids. A thorough description and schematic diagrams of the fuel assembly, fuel rod, intermediate grids, low pressure drop quick connect/disconnect top nozzle, guide thimble and instrumentation tubing, MSMGs, debris filter bottom nozzle, and the materials used for each component are provided in Section 3.0 of the TR. Based on the content of the TR, the staff concludes that a satisfactory description of the fuel assembly has been provided for this review.

### 3.2 Lead Test Assembly (LTA) Program

The LTA program for confirming the irradiation behavior of the Advanced Mark-BW fuel assembly design used four LTAs in locations where the LTAs saw near-peak core power conditions. The LTAs were irradiated for three cycles in the North Anna Unit 1 reactor. During their core residency, two cycles were in high duty locations and during the third cycle the LTAs were placed on the core periphery, a hostile hydraulic environment. Post-irradiation examinations (PIEs) were performed after every irradiation cycle to confirm that the LTAs were operating as predicted. The PIEs performed were appropriate for confirming the performance of the fuel design and the results met expectations; therefore, the LTA performance is acceptable.

### 3.3 Design Evaluation

The fuel system design bases must reflect these four objectives: (1) the fuel system is not damaged as a result of normal operation and AOOs, (2) fuel system damage is never so severe as to prevent control rod insertion when it is required, (3) the number of fuel rod failures is not underestimated for postulated accidents, and (4) coolability is always maintained. To satisfy these objectives, acceptance criteria are needed for fuel system damage, fuel rod failure, and fuel coolability. The design bases for each criterion remains the same as defined in the Mark-BW fuel assembly (Reference 7).

#### 3.3.1 Fuel System Damage Criteria

The design criteria relating to the fuel system damage should not be exceeded during normal operation including AOOs. Fuel rod failure should be precluded and fuel damage criteria should ensure that fuel system dimensions remain within operational tolerances and that functional capabilities are not reduced below those assumed in the safety analysis. Each damage mechanism listed in SRP Section 4.2 will be reviewed to confirm that the design criteria are not exceeded during normal operation for the Advanced Mark-BW design.

##### 3.3.1.1 Stress

The design criteria for stress are that the stress intensities for Advanced Mark-BW fuel assembly components shall be less than the stress limits based on the American Society of Mechanical Engineers (ASME) Code, Section III criteria (Reference 8). These design criteria are consistent with the acceptance criteria of SRP Section 4.2; therefore, the stress criteria are acceptable for application to the Advanced Mark-BW fuel design.

The stress analyses for the Advanced Mark-BW fuel assembly design were reviewed as part of the staff audit of the TR. The staff confirmed that for the stress analyses calculations, the worst case values in combination with the most limiting cycle conditions and most limiting transients were used to generate the most conservative results for each calculation. This deterministic method to obtain the most limiting stress value provides the most conservative stress value for each fuel assembly component. Positive margin to the design criteria was shown for each of the fuel assembly components; therefore, the staff concludes that the fuel assembly design satisfies the design criteria for design stress.

3.3.1.2 Cladding Strain

The design criterion for strain is that the Advanced Mark-BW fuel rod transient strain (elastic plus plastic) limit should not exceed 1 percent for Condition I and II events. This criterion is intended to preclude excessive cladding deformation during normal operation and AOOs. This design criterion is consistent with the acceptance criteria of SRP Section 4.2; therefore, the strain criterion is acceptable for application to the Advanced Mark-BW fuel design.

The analysis of the cladding strain uses the approved TACO3 code (Reference 10) to determine the cladding strain by evaluating the cladding circumferential changes before and after a linear heat rate (LHR) transient. The 1 percent strain limit corresponds to a transient LHR that is greater than the maximum transient the fuel rod is expected to experience for Condition I and II events. Therefore, the staff concludes that the fuel assembly design criteria for cladding strain are met.

3.3.1.3 Cladding Fatigue

The design criterion for cladding fatigue is that the Advanced Mark-BW maximum fuel rod fatigue usage factor shall not exceed 0.9. This design criterion is consistent with the acceptance criteria of SRP Section 4.2; therefore, this cladding fatigue criterion is acceptable for application to the Advanced Mark-BW fuel design.

The methodology used for determining the cladding fatigue is outlined in Reference 7. The methodology used a fuel rod life of 8 years and a vessel life of 40 years; therefore, the fuel rod will experience 20 percent of the number of transients that the vessel will. The analysis used all the Condition I and II events and one Condition III event to determine the total cladding fatigue usage factor. The maximum fatigue usage factor was determined to be well below the design criteria limit. Since the methodology is consistent with the guidance in SRP Section 4.2 and the maximum fatigue is well below the design criteria limit, FANP has demonstrated that the cladding fatigue acceptance criterion has been met.

3.3.1.4 Fretting

The design criteria for fretting are that the Advanced Mark-BW fuel assembly design shall be shown to provide sufficient support to limit fuel rod vibration and clad fretting wear and that span average cross-flow velocities shall be less than 2 ft/sec. These design criteria are consistent with the acceptance criteria of SRP Section 4.2; therefore, the fretting criteria are acceptable for application to the Advanced Mark-BW fuel design.

Generic mixed core analysis demonstrated that span average cross flows are less than the 2 ft/sec criterion. Therefore, FANP has demonstrated that the Advanced Mark-BW fuel has the ability to meet this criterion.

The Advanced Mark-BW fuel assembly design is an evolution of the Mark-BW fuel assembly design. The in-reactor performance of the Mark-BW fuel assembly design shows that it has positive performance in the fretting arena. This performance is demonstrated through the use of the large number of fuel rods. Similarly, the in-reactor performance of the Advanced Mark-BW LTAs produced positive results even when the LTAs were subjected to the hostile

hydraulic environment of the core periphery. FANP also performed out-of-core testing on the Advanced Mark-BW fuel assembly design including a 1000-hour endurance test. The results of the endurance test demonstrated that the fuel rod wear was comparable to other currently approved fuel assembly designs. The staff concludes that the tests and data demonstrate that the Advanced Mark-BW fuel assembly design meets the design criteria for fretting.

3.3.1.5 Oxidation, Hydriding, and Crud Buildup

The design criteria for oxidation, hydriding, and crud buildup are that the Advanced Mark-BW fuel rod cladding best-estimate corrosion shall not exceed 100 microns. These criteria are intended to preclude potential fuel system damage mechanisms. The SRP does not specify specific limits on cladding oxidation and crud, but does specify that their effects should be accounted for in the thermal and mechanical analyses performed for the fuel. FANP accounts for the corrosion based on a database established for the M5 cladding material from in-reactor performance. This is acceptable because it uses realistic data that is representative of the material and burnup limits of the Advanced Mark-BW fuel assembly design.

Based on the data for M5 cladding material under prototypical irradiation conditions, the oxidation and hydrogen pickup rates are well below the criteria limit. Because crud is included as part of the oxidation measurement, the crud is also limited and well within the total acceptable range. Therefore, FANP has demonstrated that the oxidation, hydriding, and crud buildup for the Advanced Mark-BW fuel assembly design have met the acceptance criteria.

3.3.1.6 Fuel Rod Bow

The design criterion for fuel rod bow is that the fuel rod bowing shall be evaluated with respect to the mechanical and thermal-hydraulic performance of the fuel assembly. There is not a specific limit for fuel rod bow specified in SRP Section 4.2; the SRP only requires that rod bow be included in the design analysis.

The FANP methodology for fuel rod bow was approved in Reference 11. The database used to support this methodology was extended in Reference 12. This database is representative of Zircaloy clad fuel. Because M5 cladding grows at a lower rate under irradiation conditions, the database for Zircaloy is conservative relative to the M5 performance. Therefore, the staff concludes that use of this database for predicting the rod bow of M5 clad fuel and continuing use of the penalty generated by the Zircaloy database for M5 fuel is conservative and acceptable for use.

3.3.1.7 Axial Growth

The design criteria for axial growth are that the Advanced Mark-BW fuel assembly-to-reactor internals gap allowance and the fuel assembly top nozzle-to-fuel rod gap allowance shall be designed to provide positive clearance during the assembly lifetime. These design criteria are consistent with the acceptance criteria of SRP Section 4.2; therefore, the axial growth criteria are acceptable for application to the Advanced Mark-BW fuel design.

The axial growth calculations were reviewed as part of the staff audit of the Advanced Mark-BW fuel design. The audit showed that the evaluation of the Advanced Mark-BW fuel design used

approved M5 growth models and the worst case scenarios for calculating the clearances. The tolerances were combined in an appropriate manner and treated consistently. The lowest clearance values were obtained at end-of-life (EOL) and in all evaluations, positive clearance remained at EOL under the worst conditions. Therefore, the staff concludes that the Advanced Mark-BW fuel design meets the axial growth acceptance criteria.

3.3.1.8 Fuel Rod Internal Pressure

The design criterion for fuel rod internal pressure is that the fuel system will not be damaged due to excessive internal pressure. Fuel rod internal pressure is limited to that which would cause (1) the diametral gap to increase due to outward creep during steady-state operation, and (2) extensive departure from nucleate boiling (DNB) propagation to occur. These design criteria were approved in Reference 13 and will continue to be valid since the parameters used in the methodology remain unchanged. Therefore, these criteria are acceptable for application to the Advanced Mark-BW fuel design.

The fuel rod internal pressure analysis uses the TACO3 code with the methodology approved in Reference 13. This analysis, performed on a plant-specific basis, includes the use of the most limiting manufacturing variations and a bounding power history for that plant. If the bounding analysis does not meet the fuel rod internal pressure criteria, then on a cycle-specific basis a rod-specific analysis using the actual power history and manufacturing data for that rod can be performed to demonstrate that the internal rod pressure criteria are satisfied. These dual analysis paths using the approved methodology are acceptable for use because they will demonstrate that the fuel rod internal pressure criterion is met.

3.3.1.9 Assembly Liftoff

The design criteria for assembly liftoff are that the Advanced Mark-BW fuel hold down springs must be capable of maintaining fuel assembly contact with the lower support plate during normal operating, Condition I and II events, except for the pump overspeed transient. The fuel assembly shall not compress the hold down spring to solid height for any Condition I and II events. The fuel assembly top and bottom nozzles shall maintain engagement with reactor internals for all Condition I through IV events. These design criteria are consistent with the acceptance criteria of SRP Section 4.2, except for the exclusion of the pump overspeed transient. However, FANP has been previously approved to exclude this transient; therefore, this assembly liftoff criteria are acceptable for application to the Advanced Mark-BW fuel design.

FANP performed the analyses using the approved LYNXT code (Reference 14), and demonstrated that during all conditions considered, except for the pump overspeed transient, the fuel assembly liftoff criteria are met. During the pump overspeed transient, the lift is small and the hold down spring deflection is less than the worst-case normal operating cold-shutdown condition. The hold down spring is not compressed to a solid height for any operating condition. The audit verified that under all operating conditions, the top and bottom nozzles remained engaged with the reactor internals. Therefore, the staff concludes that for the Advanced Mark-BW fuel assembly design, the fuel assembly liftoff criteria are met.

### 3.3.2 Fuel Rod Failure Criteria

The design criteria relating the fuel rod failure are applied in two ways. When they are applied to normal operation including AOOs, they are used as limits (SAFDLs) since fuel failure should not occur. When they are applied to postulated accidents, fuel failures are permitted and must be accounted for in the fission product releases. Fuel rod failure is defined as the loss of fuel rod hermeticity. Each fuel rod failure mechanism listed in SRP Section 4.2 will be reviewed to confirm that the design criteria are not exceeded during normal operation and is properly accounted for during postulated accidents for the Advanced Mark-BW design.

#### 3.3.2.1 Internal Hydriding

The design criterion for internal hydriding is that the internal hydriding shall be precluded by appropriate manufacturing controls. For the Advanced Mark-BW assembly design, hydriding is prevented by keeping the level of moisture and hydrogenous impurities within the fuel to very low levels. FANP maintains the fabrication level for total hydrogen in the fuel pellets to a level that is lower than the SRP Section 4.2 value of 2 parts per million. This design criterion is consistent with the acceptance criteria of SRP Section 4.2 and is acceptable.

FANP maintains the low hydrogen levels in the fuel rod through manufacturing controls. These controls have resulted in zero failures from internal hydriding for previous fuel designs. Because these controls will remain in place for the Advanced Mark-BW fuel assembly design and the limits are lower than the SRP Section 4.2 values, the design criteria will continue to be met with the Advanced Mark-BW fuel assembly design.

#### 3.3.2.2 Cladding Collapse

The design criterion for cladding collapse is that the predicted creep collapse life of the fuel rod must exceed the maximum expected in-core life. The SRP states that if axial gaps in the fuel pellet column occur due to densification, the cladding has the potential to collapse into a gap. Because of the large local strains that accompany this process, collapsed cladding is assumed to fail. Because the FANP design criterion is consistent with the acceptance criteria of SRP Section 4.2, it is acceptable for application to the Advanced Mark-BW fuel assembly design.

FANP uses their approved creep collapse methodology (Reference 14), to determine the potential for creep collapse of the Advanced Mark-BW fuel assembly design. This methodology uses conservative values to determine the creep collapse life of the fuel rod. Creep collapse is assumed when either the rate of creep ovalization exceeds 0.1 mils/hr or the maximum fiber stress exceeds the unirradiated yield strength of the cladding. Based on these definitions of creep collapse, the creep collapse lifetime was shown to be greater than 62 GWD/MT. Therefore, the Advanced Mark-BW fuel assembly design is adequately designed to prevent creep collapse for a service life up to 62 GWD/MT.

#### 3.3.2.3 Overheating of Cladding

The design criterion for cladding collapse is that for a 95 percent confidence level, DNB will not occur on a fuel rod during normal operation and AOOs. The SRP states that it has been traditional practice to assume that failures will not occur if the thermal margin criteria (i.e., DNB

ratio) are satisfied. Because the FANP design criterion is consistent with the acceptance criteria of SRP Section 4.2, it is acceptable for application to the Advanced Mark-BW fuel assembly design.

FANP uses two approved critical heat flux (CHF) correlations in the analysis of DNB occurrence for the fuel (References 16 and 17). These are the BWU-N and BWU-Z CHF correlations. The BWU-N correlation is used for non-mixing vane grids while the BWU-Z correlation is used with enhanced mixing vane grids. These correlations address the types of mixing vane grids used in the Advanced Mark-BW fuel assembly design. Therefore, these correlations are acceptable for use to demonstrate that the design criteria are met during normal operation and AOOs.

In addition, DNB analyses of mixed cores containing Advanced Mark-BW fuel and another vendor's fuel, must be performed using an approved mixed core methodology.

3.3.2.4 Overheating of the Fuel Pellets

The design criteria for overheating of the fuel pellets are that for a 95 percent probability at a 95 percent confidence level, fuel pellet centerline melting shall not occur for normal operation and AOOs. These design criteria are consistent with the acceptance criteria of SRP Section 4.2; therefore, they are acceptable for application to the Advanced Mark-BW fuel assembly design.

SRP Section 4.2 states that this analysis should be performed for the maximum linear heat generation rate anywhere in the core, including all hot spots and hot channel factors, and should account for the effects of burnup and composition on the melting point. FANP uses the TACO3 computer code and fuel melt methodology (Reference 12) to determine the local LHR throughout the fuel rod lifetime that could result in centerline temperature predictions exceeding the limit. The typical generic fuel centerline melt LHR is higher then any expected LHR at beginning-of-life which is the most limiting time of the cycle. Therefore, this analysis demonstrated that for the Advanced Mark-BW fuel assembly design the acceptance criteria are met.

3.3.2.5 Pellet Cladding Interaction (PCI)

There are no generally applicable criteria for PCI failure in SRP Section 4.2. The two criteria that should be applied in accordance with SRP Section 4.2 are that the uniform strain of the cladding should not exceed 1 percent and fuel melting should be avoided. Since both of these criteria were addressed previously in this safety evaluation (SE), the criteria for PCI are satisfied and acceptable for the Advanced Mark-BW design.

3.3.2.6 Cladding Rupture

There is not a specific design limit associated with cladding rupture other than the requirements in 10 CFR 50.46, Appendix K. The cladding rupture correlation and supporting data were reviewed and approved for LOCA emergency core cooling system (ECCS) analyses in Reference 7. Because this correlation was developed specifically for use in analyzing M5 cladding, the use of this correlation will provide the appropriate cladding rupture evaluations for the Advanced Mark-BW fuel assembly design under accident conditions.

### 3.3.3 Fuel Coolability

For postulated accidents in which severe damage might occur, core coolability must be maintained as required by GDC 27 and 35. Coolability, or coolable geometry, has traditionally implied that the fuel assembly retains its rod bundle geometry with adequate coolant channels to permit the removal of residual heat.

#### 3.3.3.1 Cladding Embrittlement

To meet the requirements of 10 CFR 50.46, as it relates to LOCA, acceptance criteria of 2200°F on peak cladding temperature and 17 percent on maximum cladding oxidation must be met. FANP demonstrated through high temperature oxidation and quenching tests that the M5 cladding can meet these limits. The data and analysis to support this conclusion were reviewed and approved in Reference 7. Further, Reference 7 concluded that the Baker-Just correlation is conservative for determining high temperature M5 oxidation for LOCA analysis and; therefore, is acceptable for LOCA ECCS analyses. Since the Baker-Just correlation is conservative and is required in accordance with 10 CFR 50.46 Appendix K, this criteria will be met without any modification needed to the approved LOCA ECCS codes.

#### 3.3.3.2 Violent Expulsion of Fuel

In severe reactivity insertion accidents (RIAs), such as a rod ejection event, the large and rapid deposition of energy in the fuel can result in melting, fragmentation, and dispersal of fuel. To limit the effects of an RIA, Regulatory Guide 1.77 (Reference 18), recommends that the radially averaged deposition at the hottest axial location be limited to 280 cal/g. Reference 7 reviewed and approved the use of M5 cladding and found that the use of M5 cladding has little impact on fuel expulsion and failure. Because the use of M5 will not impact the RIA analysis, this criteria will be met without any modification needed to the approved RIA analysis methodology.

#### 3.3.3.3 Fuel Rod Ballooning

To meet the requirements of 10 CFR 50.46, as related to the evaluation of ECCS performance during accidents, burst strain and flow blockage caused by ballooning of the cladding must be accounted for in the analysis of the core flow distribution. FANP developed new ballooning and flow blockage models for M5 cladding which were reviewed and approved in Reference 7. Since these models were developed specifically for use in analyzing M5 cladding, the use of these models will provide the appropriate fuel rod ballooning for the Advanced Mark-BW fuel assembly design.

#### 3.3.3.4 Fuel Assembly Structural Damage from External Forces

Earthquakes and postulated pipe breaks in the reactor coolant system would result in external forces on the fuel assembly. During these events, fuel system coolability should be maintained and damage should not be so severe as to prevent control rod insertion when required. The design criteria for fuel assembly structural damage from external forces are divided into three categories:

- Operating Basis Earthquake (OBE) – Allow continued safe operation of the fuel assembly following an OBE event by ensuring the fuel assembly components do not violate their dimensional requirements.

- Safe Shutdown Earthquake (SSE) – Ensure safe shutdown of the reactor by maintaining the overall structural integrity of the fuel assemblies, control rod insertability, and a coolable geometry within the deformation limits consistent with the ECCS and safety analysis.

- LOCA or SSE+LOCA – Ensure safe shutdown of the reactor by maintaining the overall structural integrity of the fuel assemblies and a coolable geometry within deformation limits consistent with the ECCS and safety analyses.

These design criteria are consistent with SRP Section 4.2 guidance; therefore, they are acceptable for application to the Advanced Mark-BW fuel assembly design.

FANP used the methodology in References 19 and 20 to perform generic evaluations of the structural damage from external forces. These analyses considered the horizontal and vertical impacts on the fuel assembly. These analyses included generic evaluations of the impact on the Advanced Mark-BW fuel assembly design when it is located in a mixed core. Various core loading patterns and locations in the core were utilized for the mixed core analysis impact. The results showed that the combined loads on the Advanced Mark-BW fuel assembly were small enough that coolable geometry is always maintained. The analyses results demonstrated that coolable geometry can be maintained under all the analyzed conditions; therefore, FANP demonstrated that the acceptance criteria are met.

## 4.0 CONDITIONS AND LIMITATIONS

The staff approves use of this TR subject to the following conditions:

(1) This fuel assembly design is approved for use with LEU fuel, which has been enriched to less than or equal to 5 percent.

(2) The Advanced Mark-BW fuel assembly design is licensed for a maximum fuel rod burnup of 62,000 MWD/MT.

## 5.0 CONCLUSION

The NRC staff reviewed the acceptance criteria and generic and proposed analysis methodology presented by FANP in TR BAW-10239(P), Revision 0, "Advanced Mark-BW Fuel Assembly Mechanical Design Topical Report," and determined that the criteria and proposed analysis methods are performed in accordance with the guidance provided in SRP Section 4.2. The staff finds the criteria and proposed analysis methods outlined in this TR acceptable based on the determinations provided in the technical evaluation section of this SE and concludes that the TR is acceptable for referencing by licensees. Any information contained in the TR and the supplemental letters (References 1 through 4), that is not explicitly approved in this SE has not been reviewed by the staff and is not accepted.

Therefore, on the basis of the above review and justification, the staff concludes that the FANP Advanced Mark-BW fuel assembly design is acceptable for use in Westinghouse three- and four-loop design reactors which use a 17 x 17 fuel rod array with LEU fuel subject to the conditions included in this SE.

## 6.0 REFERENCES


1. Letter from James Mallay, Framatome ANP to the USNRC, "Request for Review of BAW-10239(P), Revision 0, "Advanced Mark-BW Fuel Assembly Mechanical Design Topical Report'," April 30, 2002. (ADAMS Accession No. ML041700438.)

2. Letter from James Mallay, Framatome ANP to the USNRC, "Response to RAI to Topical Report BAW-10239(P)," May 9, 2003. (ADAMS Accession No. ML031330112.)

3. Letter from James Mallay, Framatome ANP to the USNRC, February 9, 2004. (ADAMS Accession No. ML040430211.)

4. Letter from James Mallay, Framatome ANP to the USNRC, March 18, 2004. (ADAMS Accession No. ML040820700.)

5. NUREG-0800, Standard Review Plan, Section 4.2, "Fuel System Design," Revision 2, U.S. Nuclear Regulatory Commission, July 1981.

6. EMF-92-116(P)(A), Revision 0, "Generic Mechanical Design Criteria for PWR Fuel Designs," February 1999.

7. BAW-10227-P-A, "Evaluation of Advanced Cladding and Structural Material (M5) in PWR Reactor Fuel," February 2000.

8. BAW-10172P, "Mark-BW Mechanical Design Report," July 1988.

9. American Society of Mechanical Engineers, Boiler and Pressure Vessel Code, Section III, Nuclear Power Plant Components, 1992.

10. BAW-10162-P-A, "TACO3 Fuel Pin Analysis Computer Code," October 1989.

11. BAW-10147-P-A, Revision 1, "Fuel Rod Bowing in Babcock & Wilcox Fuel Designs," May 1983.

12. BAW-10186-P-A, Revision 1, Supplement 1, "Mark-BW Extended Burnup," November 2001.

13. BAW-10183-P-A, "Fuel Rod Gas Pressure Criterion (FRGPC)," July 1995.

14. BAW-10156-P-A, Revision 1, "LYNXT: Core Transient Thermal-Hydraulic Program," August 1993.

15. BAW-10084-P-A, "Program to Determine In-Reactor Performance of BWFC Fuel Cladding Creep Collapse," July 1995.

16. BAW-10199-P-A, "The BWU Critical Heat Flux Correlations," December 1994.

17. BAW-10199-P-A, Addendum 2, "Application of the BWU-Z CHF Correlation to the Mark-BW17 Fuel Design with Mid-Span Mixing Grids," November 2000.

18. Regulatory Guide 1.77, "Assumptions Used for Evaluating a Control Rod Ejection Accident for Pressurized Water Reactors," May 1974.

19. BAW-10133-P-A, "Mark-C Fuel Assembly LOCA-Seismic Analyses," June 1986.

20. BAW-10133-P-A, Revision 1, Addendum 1, "Mark-C Fuel Assembly LOCA-Seismic Analyses," October 2000.

Attachment: Resolution of Comment

Principal Contributor: U. Shoop

Date: July 1, 2004

RESOLUTION OF COMMENT

ON DRAFT SAFETY EVALUATION FOR BAW-10239(P), REVISION 0,

"ADVANCED MARK-BW FUEL ASSEMBLY MECHANICAL DESIGN TOPICAL REPORT"

By letter dated April 23, 2004, Framatome ANP provided comment on the draft safety evaluation (SE) for BAW-10239(P), Revision 0, "Advanced Mark-BW Fuel Assembly Mechanical Design Topical Report." The following is the staff's resolution of the comment.

1. FANP Comment: Delete the third condition in the Introduction section and the Conditions section. Framatome ANP believes this condition is unnecessary, and provided additional information via phone to support why this condition is inappropriate.

   NRC Action: This comment was fully adopted. Condition 3 was deleted.

Additional changes that were made, as a result of incorporating FANP's comment:

1. In Section 1.0, Introduction, the entire second paragraph was deleted.

2. In Section 3.0, Technical Evaluation, the entire third paragraph was deleted.

3. In Section 3.3.1.8, Fuel Rod Internal Pressure, second to last sentence, "... it is fuel design-independent," was replaced with "... the parameters used in the methodology remain unchanged."

4. In Section 3.3.1.9, Assembly Liftoff, first paragraph, last sentence, "... received previous approval for this particular model to exclude this transient," was replaced with "... has been previously approved to exclude this transient."

5. In Section 3.3.2.3, Overheating of Cladding, the second paragraph, last sentence, "...meet the design criteria and are acceptable for use," was replaced with "... are acceptable for use to demonstrate that the design criteria are met during normal operation and AOOs."

6. In Section 3.3.2.3, Overheating of Cladding, a new paragraph was added at the end of the section.

7. In Section 3.3.2.4, Overheating of the Fuel Pellets, second paragraph, second sentence, the following was added: "... and fuel melt methodology (Reference 12) ..." in the middle of the sentence.

8. In Section 5.0, Conclusion, the entire second paragraph was deleted.

ATTACHMENT

FRAMATOME ANP

An AREVA and Siemens Company

FRAMATOME ANP, Inc.

April 23, 2004
NRC:04:023

Document Control Desk
ATTN: Chief, Planning, Program and Management Support Branch
U.S. Nuclear Regulatory Commission
Washington, D.C. 20555-0001

**Response to Draft SER (March 30, 2004) for BAW-10239(P)**

Ref.: 1. Draft Safety Evaluation for Framatome ANP Topical Report BAW-10239(P), Revision 0, "Advanced Mark-BW Fuel Assembly Mechanical Design Topical Report," (TAC No. MB7551), March 30, 2004.

Ref.: 2. Letter, James F. Mallay (Framatome ANP) to Document Control Desk (NRC), "Comments on Draft SER for BAW-10239," NRC:04:009, March 18, 2004.

Framatome ANP requests that the final issuance of the safety evaluation report (SER) for the topical report BAW-10239(P), Revision 0, "Advanced Mark-BW Fuel Assembly Mechanical Design Topical Report," be delayed until Framatome ANP provides specific comments on one aspect of the latest draft of the SER (Reference 1). The comments will address the third condition identified in Section 4.0 Conditions and Limitations, which states:

*Licensees referencing this TR must submit the plant-specific evaluations of the fuel to the NRC for review and approval. The specific plant evaluations requiring submittal are articulated in the conclusion section of this SE.*

Framatome ANP believes this condition is unnecessary, as described in the comments on the previous draft SER (Reference 2). We would like an opportunity to discuss this matter, and we will provide additional information to support why this condition is inappropriate.

Very truly yours,

James F. Mallay, Director
Regulatory Affairs

cc: F. M. Akstulewicz
M. C. Honcharik
U. S. Shoop
J. S. Wermiel
Project 728

FRAMATOME ANP, Inc.
3315 Old Forest Road, P.O. Box 10935 – Lynchburg, VA 24506-0935
Tel.: 434-832-3000 Fax: 434-832-0622 www.us.framatome-anp.com

FRAMATOME ANP

An AREVA and Siemens Company

FRAMATOME ANP, Inc.

March 18, 2004
NRC:04:009

Document Control Desk
ATTN: Chief, Planning, Program and Management Support Branch
U.S. Nuclear Regulatory Commission
Washington, D.C. 20555-0001

**Comments on Draft SER for BAW-10239**

A conference call was held between Framatome ANP and the NRC on March 5, 2004, to discuss the draft SER for BAW-10239 that addresses mechanical design criteria for the Advanced Mark-BW fuel design. As a result of this discussion, Framatome agreed to address the draft conditions and to provide additional explanation on the application of this topical report.

The first condition contained in the draft SER specified the use of low enriched $UO_2$ fuel. Framatome suggested that "low enriched" be deleted because it is ambiguous. The NRC said it may insert the qualifier "equal to or less than 5 percent enrichment" instead. Framatome finds either solution satisfactory. We also agree with the second condition related to burnup.

There were two other statements made in the draft SER that appeared to severely limit the application of the report: the second paragraph in the introduction (which is repeated later in the text) and the third condition. This letter explains the application of this topical report, including previously approved documents, to demonstrate that these two closely-linked statements are unnecessary.

The attachment to this letter summarizes the application of two topical reports (EMF-92-116PA and BAW-10239P) to determine whether design changes comply with established generic design criteria. Following this description of the design change process, we have provided the criteria to be used to ensure adequate safety when making design changes.

The next section of the attachment sets forth examples of typical design changes. Two sets of examples are given: those changes for which no interaction with the NRC is required, and changes that involve modifications to approved methodology (such as DNB correlations) and therefore require review and approval of the revised methods by the NRC. These examples are illustrative only and are not meant to be exhaustive. Because of the large number of parts in a fuel assembly, it is impractical to attempt to list every possible design change.

The fourth part of the attached text addresses the differences between the specific design criteria specified in the two topical reports mentioned above.

When a licensee submits a license amendment request for a new fuel reload, it is obligated to provide an updated set of references in its technical specifications. In addition to referencing the appropriate fuel design report (such as BAW-10239), those references must include all methodologies associated with the assessment of fuel behavior, including DNB correlations and the LOCA and non-LOCA methods.

FRAMATOME ANP, Inc.
3315 Old Forest Road, P.O. Box 10935 – Lynchburg, VA 24506-0935
Tel.: 434-832-3000 Fax: 434-832-0622 www.us.framatome-anp.com

In the March 5 conference call, the NRC agreed that if the process of design changes was explicitly addressed, the two statements in question (withholding acceptance of design changes and requiring plant-specific submittals) would be deleted. These two matters are summarized below.

The second paragraph of the introduction has two important elements. The first part addresses the matter of making future design changes. As described in the attachment, detailed criteria and a process for their application have been established to govern the implementation of all design changes. Therefore, it is not necessary to include a statement in the SER restricting design changes.

The second part of the paragraph simply paraphrases the third condition, which specifies the submittal of plant specific analyses. Since the design process is already governed by the criteria and processes described in the attachment and by 50.59, this statement and the third condition are unnecessary.

Very truly yours,

James F. Mallay/sm

James F. Mallay, Director
Regulatory Affairs

cc: M. C. Honcharik
U. S. Shoop
Project 728

**Attachment 1**

## 1. Design Change Process

The generic design change process described in EMF-92-116PA (Reference 1), in conjunction with the specific design criteria specified in BAW-10239P (Reference 2), will be used to justify fuel design changes for the Advanced Mark-BW without requiring NRC review and approval when BAW-10239P is referenced. Design changes are subject to the requirements in 10 CFR 50.59, and a licensee's application of this regulation will determine whether a submittal to the NRC is required.

Reference 1 provides generic design criteria and a process to demonstrate their application. In summary, compliance to these criteria can be demonstrated by:

- Documenting the fuel system and fuel assembly design drawings.
- Performing analyses with NRC-approved models and methods.
- Confirming the adequacy of significant new design features using prototype tests or lead test assemblies prior to full reload implementation.
- Continuing irradiation surveillance programs, including post irradiation examinations, to confirm fuel assembly performance.
- Using the QA procedures, QC inspection program, and design control requirements set forth in the NRC approved Framatome ANP quality assurance program.

## 2. Criteria Used to Ensure Continued Safety When Making Design Changes

Design changes in a fuel assembly are any changes that (1) may be made in accordance with 10 CFR 50.59(c) without submitting a license amendment and (2) meet all of the following criteria:

- The change does not result in an unreviewed safety question.
- No changes in plant technical specifications are required.
- The applicability of NRC-approved methodologies is demonstrated to be valid.
- Burnup limits are within those approved by the NRC.

Changes shall be developed within the conditions of the NRC-approved methods. If a change in methodology is made that meets any of the following criteria, the modified methodology will be submitted to the NRC for review and approval.

- An existing approved design code or method is replaced.
- A new core power distribution monitoring method is implemented.
- A method is applied beyond its approved limits.

## 3. Types of Design Changes

Examples of design changes that Reference 1 can be used for are presented in a letter of clarification to the NRC (Reference 3), and the NRC's concurrence is documented in Reference 4. The examples provided in Reference 3 are summarized below.

- A change in the attachment of the spacer to the guide tubes.
- A change in the strip thickness of the spacer.
- A change in cladding thickness.
- The first use of an assembly design feature previously irradiated in conjunction with one lattice (i.e. 14x14) in a different lattice (i.e. 17x17).
- A change in enrichment.
- A change in gadolinia-bearing rod locations.

Additional examples are provided in Reference 3 which, while not requiring a submittal to the NRC for the design change, would require an NRC submittal to gain approval for a new or revised model, such as:

- New cladding material.
- A spacer with a new functional mixing behavior or new rod support mechanism.
- A change that would alter the fuel behavior relative to NRC-approved models; for example, rod growth, assembly growth, or clad corrosion.

## 4. Comparison of Design Criteria

In addition to a description of the design change process, the topical report EMF-92-116PA also includes a specific set of design criteria. The criteria specified in BAW-10239 are identical to those in EMF-92-116PA in most cases. Differences in the criteria specified in these two topical reports are:

Internal Hydriding – In EMF-92-116PA the internal hydriding is controlled by manufacturing specifications and verified by QC inspection. In BAW-10239P the internal hydriding is controlled by a specific limit of 1.5 ppm on the hydrogen content during manufacturing.

Cladding Collapse – In EMF-92-116PA the cladding is prevented from collapsing by requiring that no gaps be allowed to form during irradiation. In BAW-10239P a calculation is performed to evaluate the potential for gap collapse for a defined gap size.

Loading Limits on Assembly Components – The loading limits on assembly components are required in EMF-92-116PA to comply with ASME criteria. In BAW-10239 specific non-ASME criteria are defined to prevent guide tube buckling.

Fretting – Both EMF-92-116PA and BAW-10239P require that the fuel rod be designed to prevent failure due to fretting. BAW-10239 imposes an additional limit on maximum cross flow velocity.

Assembly Liftoff – EMF-92-116PA requires that no liftoff occur for normal operation and anticipated operational occurrences. In BAW-10239P the assembly is allowed to lift for pump overspeed conditions as long as the spring does not go solid and the fuel assembly remains engaged with the reactor internals.

Fuel Assembly Handling – In EMF-92-116PA the fuel assembly handling limit is specified as 2.5 times the assembly weight. BAW-10239 does not specify a handling limit.

In summary, the generic design change process described in EMF-92-116PA (Reference 1)*, in conjunction with the specific design criteria specified in BAW-10239P (Reference 2), will be used to justify fuel design changes for the Advanced Mark-BW without requiring NRC review and approval when the topical report BAW-10239P is referenced. Design changes are subject to the requirements in 10 CFR 50.59, and a licensee's application of this regulation will determine whether a submittal to the NRC is required.

* Note that the criteria in EMF-92-116PA were developed for zircaloy cladding and modified in Reference 5 for M5 cladding. The modifications to the criteria in EMF-92-116PA, as described in Reference 5, are based on the NRC approved topical report, Reference 6.

References

1. EMF-92-116(P)(A), Revision 0, "Generic Mechanical Design Criteria for PWR Fuel Design," Siemens Power Corporation, February 1999.

2. BAW-10239P, Revision 0, "Advanced Mark-BW Fuel Assembly Mechanical Design Topical Report," Framatome ANP, March 2002.

3. Letter, James F. Mallay (Framatome ANP) to Document Control Desk (NRC), EMF-92-116(P), "Generic Mechanical Design Criteria for PWR Fuel Designs," NRC:99:029, July 9, 1999.

4. Letter, Stuart A. Richards (NRC) to James F. Mallay (Framatome ANP), "Seimens Power Corporation Re: Request for Concurrence on Safety Evaluation Report Clarifications (MA6160)," November 3, 2000.

5. BAW-10240(P), Revision 0, "Incorporation of M5™ Properties in Framatome ANP Approved Methods," September 2002.

6. BAW-10227(P)(A), Revision 1, "Evaluation of Advanced Cladding and Structural Material (M5) in PWR Reactor Fuel," Framatome Cogema Fuels, February 2000.

FRAMATOME ANP

An AREVA and Siemens Company

FRAMATOME ANP, Inc.

February 9, 2004
NRC:04:006

Document Control Desk
ATTN: Chief, Planning, Program and Management Support Branch
U.S. Nuclear Regulatory Commission
Washington, D.C. 20555-0001

**Comments on Draft Conditions for the SE on BAW-10239**

Ref.: 1. BAW-10239 Revision 0, "Advanced Mark-BW Fuel Assembly Mechanical Design Topical Report," Framatome ANP, Inc. April 2002.

The NRC sent draft conditions to Framatome ANP for possible inclusion in its safety evaluation for BAW-10239 and asked for our concurrence and comments. Following is a paraphrase of each of the four conditions and Framatome's comments.

**Condition 1:** *This fuel design is approved for use with low enriched uranium fuel only.*

**Comment 1:** We believe this statement is intended to say, "...with $UO_2$ fuel." If that is the intent, we concur. Since the topical report is clearly written for $UO_2$ fuel, we see no reason to include such a condition.

**Condition 2:** *Plant specific analysis must be performed to support the use of the advanced Mark-BW fuel design. This analysis will not be required to be submitted to the NRC for review unless the licensee determines per 10CFR50.59 that NRC approval is required or any specific acceptable fuel design limit margin is reduced by 5 percent or more.*

**Comment 2:** Upon discussion of this condition with the NRC on February 4 and 6, we understand that the last phrase ("or any specific...") will be deleted. The rest of the statement accurately characterizes the regulation, and Framatome does not believe the insertion of regulatory language is appropriate in a safety evaluation since the licensee is obligated to comply with this requirement. We also note that this condition applies to any licensee applying the topical report and not to Framatome ANP.

**Condition 3:** *Until the Part 21 evaluation cited in a letter, J. F. Mallay (Framatome ANP) to Document Control (NRC), NRC:03:083, December 9, 2003, is completed and resolved, all licensees who intend to use the Advanced Mark-BW fuel design must submit justification for the use of this design to the NRC for review and approval.*

FRAMATOME ANP, Inc.
3315 Old Forest Road, P.O. Box 10935 – Lynchburg, VA 24506-0935
Tel.: 434-832-3000 Fax: 434-832-0622 www.us.framatome-anp.com

**Comment 3:** Framatome does not believe it is appropriate to include this condition in a safety evaluation. First, the condition does not apply to the topical report. Second, the condition unnecessarily interjects itself into a well defined regulatory process to which Framatome ANP and its licensees must comply. If, in the evaluation of this situation, a deviation is discovered, this finding must be identified to affected licensees, who in turn are obligated to account for the deviation. Third, the condition applies to licensees, not Framatome ANP.

**Condition 4:** *The Advanced Mark-BW fuel design is licensed for a maximum fuel rod burnup of 62,000 MWD/MTU.*

**Comment 4:** Framatome has no objection to this condition since this limit is stipulated in the topical report; however, the condition appears unnecessary.

We appreciate this opportunity to review and comment on the draft conditions.

Very truly yours,

James F. Mallay/sm

James F. Mallay, Director
Regulatory Affairs

cc: D. G. Holland
U. S. Shoop
Project 728

UNITED STATES
NUCLEAR REGULATORY COMMISSION
WASHINGTON, D.C. 20555-0001

March 30, 2004

Mr. James F. Mallay
Director, Regulatory Affairs
Framatome ANP
3815 Old Forest Road
Lynchburg, VA 24501

SUBJECT: DRAFT SAFETY EVALUATION FOR FRAMATOME ANP TOPICAL REPORT BAW-10239(P), REVISION 0, "ADVANCED MARK-BW FUEL ASSEMBLY MECHANICAL DESIGN TOPICAL REPORT" (TAC NO. MB7551)

Dear Mr. Mallay:

By letter dated April 30, 2002, and its supplements dated May 9, 2003, March 18, 2004, Framatome ANP (FANP) submitted Topical Report (TR) BAW-10239(P), Revision 0, "Advanced Mark-BW Fuel Assembly Mechanical Design Topical Report," to the staff for review. Enclosed for FANP's review and comment is a copy of the staff's draft safety evaluation (SE) for TR BAW-10239(P), Revision 0.

Pursuant to Section 2.390 of Title 10 of the *Code of Federal Regulations* (10 CFR), we have determined that the enclosed draft SE does not contain proprietary information. As discussed in a phone call on March 29, 2004, between Jerry Holm of your staff and Michelle Honcharik, FANP agrees that the draft SE does not contain proprietary information. Therefore, the draft SE will be made publicly available immediately. Twenty working days are provided to you to comment on any factual errors or clarity concerns contained in the SE. The final SE will be issued after making any necessary changes and will be made publicly available. The staff's disposition of your comments on the draft SE will be discussed in the final SE.

To facilitate the staff's review of your comments, please provide a marked-up copy of the draft SE showing proposed changes. Number the lines in the marked-up SE sequentially and provide a summary table of the proposed changes.

In the event of any comments or questions, please contact Michelle Honcharik at (301) 415-1774.

Sincerely,

Stephen Dembek, Chief, Section 2
Project Directorate IV
Division of Licensing Project Management
Office of Nuclear Reactor Regulation

Project No. 728

Enclosure: Draft Safety Evaluation

UNITED STATES
NUCLEAR REGULATORY COMMISSION
WASHINGTON, D.C. 20555-0001

DRAFT SAFETY EVALUATION BY THE OFFICE OF NUCLEAR REACTOR REGULATION

BAW-10239(P), REVISION 0, "ADVANCED MARK-BW FUEL ASSEMBLY

MECHANICAL DESIGN TOPICAL REPORT"

FRAMATOME ANP

PROJECT NO. 728

## 1.0 INTRODUCTION

By letter dated April 30, 2002, and its supplements dated May 9, 2003, March 18, 2004, (References 1, 2, and 3), Framatome ANP (FANP) requested approval of Topical Report (TR) BAW-10239(P), Revision 0, "Advanced Mark-BW Fuel Assembly Mechanical Design Topical Report." Approval would permit licensees with Westinghouse three- and four-loop reactors that use a 17 x 17 fuel rod array to reference the generic TR for use of the FANP Advanced Mark-BW fuel. The FANP Advanced Mark-BW design is an evolution of the Mark-BW fuel design and includes new design features. This TR evaluated the performance of the Advanced Mark-BW fuel design against the design criteria defined in the Standard Review Plan (SRP), Section 4.2, "Fuel System Design" (Reference 4). Additionally, this TR extends the use of the fuel design change process defined in EMF-92-116(P)(A), "Generic Mechanical Design Criteria for PWR Fuel Designs," using the design criteria defined within this TR for use in evaluating small changes to the Advanced Mark-BW fuel assembly design.

FANP requested approval to have the plant-specific evaluations of the performance of the Advanced Mark-BW fuel assembly not be required to be submitted to the NRC. Because FANP has not performed generic analyses for certain design aspects of the fuel within this TR, licensees referencing this TR must submit plant-specific evaluations of the fuel to the NRC for review and approval prior to insertion into their plant, therefore, the staff denies this request.

The staff approves use of this TR subject to the following conditions:

(1) This fuel assembly design is approved for use with low enrichment uranium oxide (LEU) fuel, which has been enriched to less than or equal to 5 percent.

(2) The Advanced Mark-BW fuel assembly design is licensed for a maximum fuel rod burnup of 62,000 Megawatt-days/metric ton (MWD/MT).

(3) Licensees referencing this TR must submit the plant-specific evaluations of the fuel to the NRC for review and approval. The specific plant evaluations requiring submittal are articulated in the conclusion section of this safety evaluation (SE).

## 2.0 REGULATORY EVALUATION

Fuel designs must ensure that the reactor core will have appropriate margin to assure that the specified acceptable fuel design limits (SAFDLs) criteria in Title 10 of the *Code of Federal Regulations* (10 CFR) Part 50, Appendix A, General Design Criterion (GDC) 10 are met. Additionally, GDC 27 and 25 require that licensees maintain control rod insertability and core coolability. Loss-of-coolant accident (LOCA) coolability requirements are contained in 10 CFR 50.46. The staff review process for new fuel designs is contained in SRP Section 4.2. The guidance provided within the SRP forms the basis of the staff's review and ensures that GDC 10 is met.

## 3.0 TECHNICAL EVALUATION

The FANP Advanced Mark-BW fuel assembly design is an evolution of the FANP Mark-BW fuel assembly design and incorporates new design features including: the TRAPPER bottom nozzle, mid-span mixing grids (MSMGs), a floating intermediate grid design, a quick connect/disconnect top nozzle, and use of M5 material for the cladding, structural tubing, and grids.

This TR extends the use of the fuel design change process defined in EMF-92-116(P)(A), "Generic Mechanical Design Criteria for PWR Fuel Designs," using the design criteria defined within this TR for use in evaluating small changes to the Advanced Mark-BW fuel assembly design. The extension of the EMF-92-116(P)(A) methodology to the Advanced Mark-BW fuel assembly design is accomplished by using the fuel design criteria contained in this TR for the Advanced Mark-BW fuel assembly design while using the compliance demonstration method, nuclear design criteria, and inspections and surveillance methods contained in EMF-92-116(P)(A). FANP stated in Reference 3 that the design process is governed by 10 CFR 50.59. The staff notes that the 10 CFR 50.59 process is not applicable to changes in approved TRs. The 10 CFR 50.59 process is only applicable to a holder of a license authorizing operation of a production or utilization facility and is applicable to changes to elements of the final safety analysis report (FSAR). Therefore, the 10 CFR 50.59 process is not applicable to changes in elements contained within this TR.

FANP requested approval to have the plant-specific evaluations of the performance of the Advanced Mark-BW fuel assembly not be required to be submitted to the NRC. Because FANP has not performed generic analyses for certain design aspects of the fuel within this TR, licensees referencing this TR must submit plant-specific evaluations of the fuel to the NRC for review and approval prior to insertion into their plant; therefore, the staff denies this request.

The objectives of this fuel system safety review, as described in SRP Section 4.2, are to provide assurance that (1) the fuel system is not damaged as a result of normal operation and anticipated operational occurrences (AOOs), (2) fuel system damage is never so severe as to prevent control rod insertion when it is required, (3) the number of fuel rod failures is not underestimated for postulated accidents, and (4) coolability is always maintained. A fuel system is "not damaged" when fuel rods do not fail, fuel system dimensions remain within operational tolerances, and functional capabilities are not reduced below those assumed in the safety analyses. Fuel rod failure means that the fuel rod leaks and that the first fission product

barrier (the cladding) has been breached. Coolability which is sometimes termed coolable geometry, means that the fuel assembly retains its rod-bundle geometrical configuration with adequate coolant channels to permit removal of residual heat even after an accident.

3.1 Fuel Assembly Design

The Advanced Mark-BW fuel assembly design is intended for use in Westinghouse three- and four-loop reactors which use a 17 x 17 fuel rod array. The design is based on the Mark-BW fuel assembly design and incorporates some additional features that have been proved through reactor use such as: the TRAPPER bottom nozzle, MSMGs, a floating intermediate grid design, and a low pressure drop quick connect/disconnect top nozzle. The design also uses the M5 advanced alloy which has been previously approved (Reference 5) for cladding, structural tubing and grids. A thorough description and schematic diagrams of the fuel assembly, fuel rod, intermediate grids, low pressure drop quick connect/disconnect top nozzle, guide thimble and instrumentation tubing, MSMGs, debris filter bottom nozzle, and the materials used for each component are provided in Section 3.0 of the TR. Based on the content of the TR, the staff concludes that a satisfactory description of the fuel assembly has been provided for this review.

3.2 Lead Test Assembly (LTA) Program

The LTA program for confirming the irradiation behavior of the Advanced Mark-BW fuel assembly design used four LTAs in locations where the LTAs saw near-peak core power conditions. The LTAs were irradiated for three cycles in the North Anna Unit 1 reactor. During their core residency, two cycles were in high duty locations and during the third cycle the LTAs were placed on the core periphery, a hostile hydraulic environment. Post-irradiation examinations (PIEs) were performed after every irradiation cycle to confirm that the LTAs were operating as predicted. The PIEs performed were appropriate for confirming the performance of the fuel design and the results met expectations; therefore, the LTA performance is acceptable.

3.3 Design Evaluation

The fuel system design bases must reflect these four objectives: (1) the fuel system is not damaged as a result of normal operation and AOOs, 2) fuel system damage is never so severe as to prevent control rod insertion when it is required, (3) the number of fuel rod failures is not underestimated for postulated accidents, and (4) coolability is always maintained. To satisfy these objectives, acceptance criteria are needed for fuel system damage, fuel rod failure, and fuel coolability. The design bases for each criteria remains the same as defined in the Mark-BW fuel assembly (Reference 6).

3.3.1 <u>Fuel System Damage Criteria</u>

The design criteria relating to the fuel system damage should not be exceeded during normal operation including AOOs. Fuel rod failure should be precluded and fuel damage criteria should assure that fuel system dimensions remain within operational tolerances and that functional capabilities are not reduced below those assumed in the safety analysis. Each

damage mechanism listed in SRP Section 4.2 will be reviewed to confirm that the design criteria are not exceeded during normal operation for the Advanced Mark-BW design.

3.3.1.1 Stress

The design criteria for stress is that stress intensities for Advanced Mark-BW fuel assembly components shall be less than the stress limits based on the American Society of Mechanical Engineers (ASME) Code, Section III criteria (Reference 7). This design criteria are consistent with the acceptance criteria of SRP Section 4.2; therefore, this stress criteria are acceptable for application to the Advanced Mark-BW fuel design.

The stress analyses for the Advanced Mark-BW fuel assembly design were reviewed as part of the staff audit of the TR. The staff confirmed that for the stress analyses calculations, the worst case values in combination with the most limiting cycle conditions and most limiting transients were used to generate the most conservative results for each calculation. This deterministic method to obtain the most limiting stress value provides the most conservative stress value for each fuel assembly component. Positive margin to the design criteria was shown for each of the fuel assembly components; therefore, the staff concludes that the fuel assembly design satisfies the design criteria for design stress.

3.3.1.2 Cladding Strain

The design criteria for strain is that the Advanced Mark-BW fuel rod transient strain (elastic plus plastic) limit is 1 percent for Condition I and II events. This criteria are intended to preclude excessive cladding deformation during normal operation and AOOs. This design criteria are consistent with the acceptance criteria of SRP Section 4.2; therefore, this strain criteria are acceptable for application to the Advanced Mark-BW fuel design.

The analysis of the cladding strain uses the approved TACO3 code (Reference 8) to determine the cladding strain by evaluating the cladding circumferential changes before and after a linear heat rate (LHR) transient. The 1 percent strain limit corresponds to a transient LHR that is greater than the maximum transient the fuel rod is expected to experience for Condition I and II events. Therefore, the staff concludes that the fuel assembly design criteria for cladding strain are met.

3.3.1.3 Cladding Fatigue

The design criteria for cladding fatigue is that the Advanced Mark-BW maximum fuel rod fatigue usage factor is 0.9. This design criteria are consistent with the acceptance criteria of SRP Section 4.2; therefore, this cladding fatigue criteria are acceptable for application to the Advanced Mark-BW fuel design.

The methodology used for determining the cladding fatigue is outlined in Reference 5. The methodology used a fuel rod life of 8 years and a vessel life of 40 years; therefore, the fuel rod will experience 20 percent of the number of transients that the vessel will. The analysis used all the Condition I and II events and one Condition III event to determine the total cladding fatigue usage factor. The maximum fatigue usage factor was determined to be well below the design

criteria limit. Since the methodology is consistent with the guidance in SRP Section 4.2 and the maximum fatigue is well below the design criteria limit, FANP has demonstrated that the cladding fatigue acceptance criteria has been met.

3.3.1.4 Fretting

The design criteria for fretting is that the Advanced Mark-BW fuel assembly design shall be shown to provide sufficient support to limit fuel rod vibration and clad fretting wear and that span average cross-flow velocities shall be less than 2 ft/sec. This design criteria are consistent with the acceptance criteria of SRP Section 4.2; therefore, this fretting criteria are acceptable for application to the Advanced Mark-BW fuel design.

Generic mixed core analysis demonstrated that span average cross flows are less than the 2 ft/sec criterion. Therefore, FANP has demonstrated that the Advanced Mark-BW fuel has the ability to meet this criterion.

The Advanced Mark-BW fuel assembly design is an evolution of the Mark-BW fuel assembly design. The in-reactor performance of the Mark-BW fuel assembly design shows that it has performed well in the fretting arena. This performance is demonstrated through the use of the large number of fuel rods. Similarly, the in-reactor performance of the Advanced Mark-BW LTAs produced positive results even when the LTAs were subjected to the hostile hydraulic environment of the core periphery. FANP also performed out-of-core testing on the Advanced Mark-BW fuel assembly design including a 1000 hour endurance test. The results of the endurance test demonstrated that the fuel rod wear was comparable to other currently approved fuel assembly designs. The staff concludes that the tests and data demonstrate that the Advanced Mark-BW fuel assembly design meets the design criteria for fretting.

3.3.1.5 Oxidation, Hydriding, and Crud Buildup

The design criteria for oxidation, hydriding, and crud buildup is that the Advanced Mark-BW fuel rod cladding best-estimate corrosion shall not exceed 100 microns. This criteria are intended to preclude potential fuel system damage mechanisms. The SRP does not specify specific limits on cladding oxidation and crud, but does specify that their effects should be accounted for in the thermal and mechanical analyses performed for the fuel. FANP accounts for the corrosion based on a database established for the M5 cladding material from in-reactor performance. This is acceptable because it uses realistic data that is representative of the material and burnup limits of the Advanced Mark-BW fuel assembly design.

Based on the data for M5 cladding material under prototypical irradiation conditions, the oxidation and hydrogen pickup rates are well below the criteria limit. Because crud is included as part of the oxidation measurement, the crud is also limited and well within the total acceptable range. Therefore, FANP has demonstrated that the oxidation, hydriding, and crud buildup for the Advanced Mark-BW fuel assembly design has met the acceptance criteria.

3.3.1.6 Fuel Rod Bow

The design criteria for fuel rod bow require that fuel rod bowing shall be evaluated with respect to the mechanical and thermal-hydraulic performance of the fuel assembly. There is not a

specific limit specified for fuel rod bow in SRP Section 4.2; the SRP only requires that rod bow be included in the design analysis.

The FANP methodology for fuel rod bow was approved in Reference 9. The database used to support this methodology was extended in Reference 10. This database is representative of Zircaloy clad fuel. Because M5 cladding grows at a lower rate under irradiation conditions, the database for Zircaloy is conservative relative to the M5 performance. Therefore, the staff concludes that use of this database for predicting the rod bow of M5 clad fuel and continuing use of the penalty generated by the Zircaloy database for M5 fuel is conservative and acceptable for use.

3.3.1.7 Axial Growth

The design criteria for axial growth is that the Advanced Mark-BW fuel assembly-to-reactor internals gap allowance and the fuel assembly top nozzle-to-fuel rod gap allowance shall be designed to provide positive clearance during the assembly lifetime. This design criteria are consistent with the acceptance criteria of SRP Section 4.2; therefore, this axial growth criteria are acceptable for application to the Advanced Mark-BW fuel design.

The axial growth calculations were reviewed as part of the staff audit of the Advanced Mark-BW fuel design. The audit showed that the evaluation of the Advanced Mark-BW fuel design used approved M5 growth models and the worst case scenarios for calculating the clearances. The tolerances were combined in an appropriate manner and treated consistently. The lowest clearance values were obtained at end-of-life (EOL) and in all evaluations, positive clearance remained at EOL under the worst conditions. Therefore, the staff concludes that the Advanced Mark-BW fuel design meets the axial growth acceptance criteria.

3.3.1.8 Fuel Rod Internal Pressure

The design criteria for fuel rod internal pressure is that the fuel system will not be damaged due to excessive internal pressure. Fuel rod internal pressure is limited to that which would cause (1) the diametral gap to increase due to outward creep during steady-state operation, and (2) extensive departure from nucleate boiling (DNB) propagation to occur. This design criteria was approved in Reference 11 and will continue to be valid since it is fuel design-independent. Therefore, this criteria are acceptable for application to the Advanced Mark-BW fuel design.

The fuel rod internal pressure analysis uses the TACO3 code with the methodology approved in Reference 11. This analysis, performed on a plant-specific basis, includes the use of the most limiting manufacturing variations and a bounding power history for that plant. If the bounding analysis does not meet the fuel rod internal pressure criteria then, on a cycle-specific basis, a rod-specific analysis using the actual power history and manufacturing data for that rod can be performed to demonstrate that the internal rod pressure criteria are satisfied. These dual analysis paths using the approved methodology are acceptable for use because they will demonstrate that the fuel rod internal pressure criterion is met.

3.3.1.9 Assembly Liftoff

The design criteria for assembly liftoff is that the Advanced Mark-BW fuel holddown springs must be capable of maintaining fuel assembly contact with the lower support plate during normal operating, Conditions I and II events, except for the pump overspeed transient. The fuel assembly shall not compress the holddown spring to solid height for any Conditions I and II event. The fuel assembly top and bottom nozzles shall maintain engagement with reactor internals for all Conditions I through IV events. This design criteria are consistent with the acceptance criteria of SRP Section 4.2 except for the exclusion of the pump overspeed transient. However, FANP received previous approval for this particular model to exclude this transient; therefore, this assembly liftoff criteria are acceptable for application to the Advanced Mark-BW fuel design.

FANP performed the analyses using the approved LYNXT code (Reference 12), and demonstrated that during all conditions considered except for the pump overspeed transient, the fuel assembly liftoff criteria are met. During the pump overspeed transient, the lift is small and the holddown spring deflection is less than the worst-case normal operating cold-shutdown condition. The holddown spring is not compressed to a solid height for any operating condition. The audit verified that under all operating conditions, the top and bottom nozzles remained engaged with the reactor internals. Therefore, the staff concludes that for the Advanced Mark-BW fuel assembly design, the fuel assembly liftoff criteria are met.

3.3.2 Fuel Rod Failure Criteria

The design criteria relating the fuel rod failure are applied in two ways. When they are applied to normal operation including AOOs, they are used as limits (SAFDLs) since fuel failure should not occur. When they are applied to postulated accidents, fuel failures are permitted and must be accounted for in the fission product releases. Fuel rod failure is defined as the loss of fuel rod hermeticity. Each fuel rod failure mechanism listed in SRP Section 4.2 will be reviewed to confirm that the design criteria are not exceeded during normal operation and is properly accounted for during postulated accidents for the Advanced Mark-BW design.

3.3.2.1 Internal Hydriding

The design criteria for internal hydriding is that internal hydriding shall be precluded by appropriate manufacturing controls. For the Advanced Mark-BW assembly design, hydriding is prevented by keeping the level of moisture and hydrogenous impurities within the fuel to very low levels. FANP maintains the fabrication level for total hydrogen in the fuel pellets to a level that is lower than the SRP Section 4.2 value of 2 parts per million. This design criteria are consistent with the acceptance criteria of SRP Section 4.2 and is acceptable.

FANP maintains the low hydrogen levels in the fuel rod through manufacturing controls. These controls have resulted in zero failures from internal hydriding for previous fuel designs. Because these controls will remain in place for the Advanced Mark-BW fuel assembly design and the limits are lower than the SRP Section 4.2 values, the design criteria will continue to be met with the Advanced Mark-BW fuel assembly design.

3.3.2.2 Cladding Collapse

The design criteria for cladding collapse is that predicted creep collapse life of the fuel rod must exceed the maximum expected in-core life. The SRP states that if axial gaps in the fuel pellet column occur due to densification, the cladding has the potential to collapse into a gap. Because of the large local strains that accompany this process, collapsed cladding is assumed to fail. Because the FANP design criteria are consistent with the acceptance criteria of SRP Section 4.2, it is acceptable for application to the Advanced Mark-BW fuel assembly design.

FANP uses their approved creep collapse methodology (Reference 13), to determine the potential for creep collapse of the Advanced Mark-BW fuel assembly design. This methodology uses conservative values to determine the creep collapse life of the fuel rod. Creep collapse is assumed when either the rate of creep ovalization exceeds 0.1 mils/hr or the maximum fiber stress exceeds the unirradiated yield strength of the cladding. Based on these definitions of creep collapse, the creep collapse lifetime was shown to be greater than 62 GWD/MT. Therefore, the Advanced Mark-BW fuel assembly design is adequately designed to prevent creep collapse for a service life up to 62 GWD/MT.

3.3.2.3 Overheating of Cladding

The design criteria for cladding collapse is that for a 95 percent confidence level, DNB will not occur on a fuel rod during normal operation and AOOs. The SRP states that it has been traditional practice to assume that failures will not occur if the thermal margin criteria (DNB ratio) are satisfied. Because the FANP design criteria are consistent with the acceptance criteria of SRP Section 4.2, it is acceptable for application to the Advanced Mark-BW fuel assembly design.

FANP uses two approved critical heat flux (CHF) correlations in the analysis of DNB occurrence for the fuel (References 14 and 15). These are the BWU-N and BWU-Z CHF correlations. The BWU-N correlation is used for non-mixing vane grids while the BWU-Z correlation is used with enhanced mixing vane grids. These correlations address the types of mixing vane grids used in the Advanced Mark-BW fuel assembly design. Therefore, these correlations meet the design criteria and are acceptable for use.

3.3.2.4 Overheating of the Fuel Pellets

The design criteria for overheating of the fuel pellets is that for a 95 percent probability at a 95 percent confidence level, fuel pellet centerline melting shall not occur for normal operation and AOOs. This design criteria are consistent with the acceptance criteria of SRP Section 4.2; therefore, it is acceptable for application to the Advanced Mark-BW fuel assembly design.

SRP Section 4.2 states that this analysis should be performed for the maximum linear heat generation rate anywhere in the core, including all hot spots and hot channel factors, and should account for the effects of burnup and composition on the melting point. FANP uses the TACO3 computer code to determine the local LHR throughout the fuel rod lifetime that could result in centerline temperature predictions exceeding the limit. The typical generic fuel centerline melt LHR is higher then any expected LHR at beginning-of-life which is the most

limiting time of the cycle. Therefore, this analysis demonstrated that for the Advanced Mark-BW fuel assembly design the acceptance criteria are met.

3.3.2.5 Pellet/Cladding Interaction (PCI)

There is no generally applicable criteria for PCI failure in SRP Section 4.2. The two criteria that should be applied in accordance with SRP Section 4.2 is that the uniform strain of the cladding should not exceed 1 percent and fuel melting should be avoided. Since both of these criteria were addressed previously in this SE, the criteria for PCI is satisfied and acceptable for the Advanced Mark-BW design.

3.3.2.6 Cladding Rupture

There is not a specific design limit associated with cladding rupture other than the requirements in 10 CFR 50.46, Appendix K. The cladding rupture correlation and supporting data were reviewed and approved for LOCA emergency core cooling system (ECCS) analyses in Reference 5. Because this correlation was developed specifically for use in analyzing M5 cladding, the use of this correlation will provide the appropriate cladding rupture evaluations for the Advanced Mark-BW fuel assembly design under accident conditions.

3.3.3 Fuel Coolability

For postulated accidents in which severe damage might occur, core coolability must be maintained as required by GDC 27 and 35. Coolability, or coolable geometry, has traditionally implied that the fuel assembly retains its rod-bundle geometry with adequate coolant channels to permit the removal of residual heat.

3.3.3.1 Cladding Embrittlment

To meet the requirements of 10 CFR 50.46, as it relates to LOCA, acceptance criteria of 2200°F on peak cladding temperature and 17 percent on maximum cladding oxidation must be met. FANP demonstrated through high temperature oxidation and quenching tests that the M5 cladding can meet these limits. The data and analysis to support this conclusion was reviewed and approved in Reference 16. Further, Reference 5 concluded that the Baker-Just correlation is conservative for determining high temperature M5 oxidation for LOCA analysis and; therefore, is acceptable for LOCA ECCS analyses. Since the Baker-Just correlation is conservative and is required in accordance with 10 CFR 50.46 Appendix K, this criteria will be met without any modification needed to the approved LOCA ECCS codes.

3.3.3.2 Violent Expulsion of Fuel

In severe reactivity insertion accidents (RIAs), such as a rod ejection event, the large and rapid deposition of energy in the fuel can result in melting, fragmentation, and dispersal of fuel. To limit the effects of an RIA, Regulatory Guide 1.77 (Reference 17), recommends that the radially averaged deposition at the hottest axial location be limited to 280 cal/g. Reference 5 reviewed and approved the use of M5 cladding and found that the use of M5 cladding has little impact on

fuel expulsion and failure. Because the use of M5 will not impact the RIA analysis, this criteria will be met without any modification needed to the approved RIA analysis methodology.

3.3.3.3 Fuel Rod Ballooning

To meet the requirements of 10 CFR 50.46, as it relates to evaluating ECCS performance during accidents, burst strain and flow blockage caused by ballooning of the cladding must be accounted for in the analysis of the core flow distribution. FANP developed new ballooning and flow blockage models for M5 cladding which were reviewed and approved in Reference 5. Since these models were developed specifically for use in analyzing M5 cladding, the use of these models will provide the appropriate fuel rod ballooning for the Advanced Mark-BW fuel assembly design.

3.3.3.4 Fuel Assembly Structural Damage from External Forces

Earthquakes and postulated pipe breaks in the reactor coolant system would result in external forces on the fuel assembly. During these events, fuel system coolability should be maintained and damage should not be so severe as to prevent control rod insertion when required. The design criteria for fuel assembly structural damage from external forces is divided into three categories:

- Operating Basis Earthquake (OBE) – Allow continued safe operation of the fuel assembly following an OBE event by ensuring the fuel assembly components do not violate their dimensional requirements.

- Safe Shutdown Earthquake (SSE) – Ensure safe shutdown of the reactor by maintaining the overall structural integrity of the fuel assemblies, control rod insertability, and a coolable geometry within the deformation limits consistent with the ECCS and safety analysis.

- LOCA or SSE+LOCA – Ensure safe shutdown of the reactor by maintaining the overall structural integrity of the fuel assemblies and a coolable geometry within deformation limits consistent with the ECCS and safety analysis.

These design criteria are consistent with SRP Section 4.2 guidance; therefore, they are acceptable for application to the Advanced Mark-BW fuel assembly design.

FANP used the methodology in References 18 and 19 to perform generic evaluations of the structural damage from external forces. These analyses considered the horizontal and vertical impacts on the fuel assembly. These analyses included generic evaluations of the impact on the Advanced Mark-BW fuel assembly design when it is located in a mixed core. Various core loading patterns and locations in the core were utilized for the mixed core analysis impact. The results showed that the combined loads on the Advanced Mark-BW fuel assembly were small enough that coolable geometry is always maintained. The analyses results demonstrated that coolable geometry can be maintained under all the analyzed conditions; therefore, FANP demonstrated that the acceptance criteria are met.

## 4.0 CONDITIONS AND LIMITATIONS

The staff approves use of this TR subject to the following conditions:

(1) This fuel assembly design is approved for use with LEU fuel, which has been enriched to less than or equal to 5 percent.

(2) The Advanced Mark-BW fuel assembly design is licensed for a maximum fuel rod burnup of 62,000 MWD/MT.

(3) Licensees referencing this TR must submit the plant-specific evaluations of the fuel to the NRC for review and approval. The specific plant evaluations requiring submittal are articulated in the conclusion section of this SE.

## 5.0 CONCLUSION

The NRC staff reviewed the acceptance criteria and generic and proposed analysis methodology presented by FANP in TR BAW-10239(P), Revision 0, "Advanced Mark-BW Fuel Assembly Mechanical Design Topical Report," and determined that the criteria and proposed analysis methods are performed in accordance with the guidance provided in SRP Section 4.2. The staff finds the criteria and proposed analysis methods outlined in this TR acceptable based on the determinations provided in the evaluation section of this SE and concludes that the TR is acceptable for referencing by licensees.

Because FANP has not performed generic analyses for certain design aspects of the fuel within this TR, licensees referencing this TR must submit plant-specific evaluations of the fuel to the NRC for review and approval prior to insertion into their plant. The specific plant evaluations requiring submittal include: rod internal pressure, cladding collapse, DNB analysis, and fuel melting. In addition, DNB analyses of mixed cores containing Advanced Mark-BW must be performed using an approved mixed core methodology. These analyses are necessary to assure the integrity of the fuel for both normal and AOOs and to assure that all safety limits will be met.

Therefore, on the basis of the above review and justification, the staff concludes that the FANP Advanced Mark-BW fuel assembly design is acceptable for use in Westinghouse three- and four-loop design reactors which use a 17 x 17 fuel rod array with LEU fuel subject to the conditions included in this SE.

## 6.0 REFERENCES

1. Letter from James Mallay, Framatome ANP to the USNRC, "Request for Review of BAW-10239(P), Revision 0, "Advanced Mark-BW Fuel Assembly Mechanical Design Topical Report'," April 30, 2002. (ADAMS Accession No. ML040770368.)

2. Letter from James Mallay, Framatome ANP to the USNRC, "Response to RAI to Topical Report BAW-10239(P)," May 9, 2003. (ADAMS Accession No. ML031330112.)

3. Letter from James Mallay, Framatome ANP to the USNRC, "Comments on Draft SER for BAW-10239," March 18, 2004. (ADAMS Accession No. ML040820700.)

4. NUREG-0800, Standard Review Plan, Section 4.2, "Fuel System Design," Revision 2, U.S. Nuclear Regulatory Commission, July 1981.

5. BAW-10227-P-A, "Evaluation of Advanced Cladding and Structural Material (M5) in PWR Reactor Fuel," February 2000.

6. BAW-10172P, "Mark-BW Mechanical Design Report," July 1988.

7. American Society of Mechanical Engineers, Boiler and Pressure Vessel Code, Section III, Nuclear Power Plant Components, 1992.

8. BAW-10162-P-A, "TACO3 Fuel Pin Analysis Computer Code," October 1989.

9. BAW-10147-P-A, Revision 1, "Fuel Rod Bowing in Babcock & Wilcox Fuel Designs," May 1983.

10. BAW-10186-P-A, Revision 1, Supplement 1, "Mark-BW Extended Burnup," November 2001.

11. BAW-10183-P-A, "Fuel Rod Gas Pressure Criterion (FRGPC)," July 1995.

12. BAW-10156-P-A, Revision 1, "LYNXT: Core Transient Thermal-Hydraulic Program," August 1993.

13. BAW-10084-P-A, "Program to Determine In-Reactor Performance of BWFC Fuel Cladding Creep Collapse," July 1995.

14. BAW-10199-P-A, "The BWU Critical Heat Flux Correlations," December 1994.

15. BAW-10199-P-A, Addendum 2, "Application of the BWU-Z CHF Correlation to the Mark-BW17 Fuel Design with Mid-Span Mixing Grids," November 2000.

16. EMF-92-116(P)(A), Revision 0, "Generic Mechanical Design Criteria for PWR Fuel Designs," February 1999.

17. Regulatory Guide 1.77, "Assumptions Used for Evaluating a Control Rod Ejection Accident for Pressurized Water Reactors," May 1974.

18. BAW-10133-P-A, "Mark-C Fuel Assembly LOCA-Seismic Analyses," June 1986.

19. BAW-10133-P-A, Revision 1, Addendum 1, "Mark-C Fuel Assembly LOCA-Seismic Analyses," October 2000.

Principal Contributor: U. Shoop

Date:

FRAMATOME ANP

An AREVA and Siemens company

FRAMATOME ANP, Inc.

May 9, 2003
NRC:03:031

Document Control Desk
ATTN: Chief, Planning, Program and Management Support Branch
U.S. Nuclear Regulatory Commission
Washington, D.C. 20555-0001

**Response to RAI on Topical Report BAW-10239(P)**

Ref.: 1. Letter, James F. Mallay (Framatome ANP) to Document Control Desk (NRC), "Request for Review of BAW-10239(P), Revision 0, Advanced Mark-BW Fuel Assembly Mechanical Design Topical Report," NRC:02:022, April 30, 2002.

Ref.: 2. Letter, Drew Holland (NRC) to James F. Mallay (Framatome ANP), "Request for Additional Information (RAI) - Topical Report BAW-10239(P), Revision 0, 'Advanced Mark-BW Fuel Assembly Mechanical Design Topical Report' (TAC No. MB7551)," April 7, 2003.

Framatome ANP requested NRC review and approval of the topical report BAW-10239(P), Revision 0, "Advanced Mark-BW Fuel Assembly Mechanical Design Topical Report" in Reference 1. The NRC requested additional information regarding this topical report in Reference 2. The response to this RAI is enclosed.

Very truly yours,

Jerald S. Holm for

James F. Mallay, Director
Regulatory Affairs

Enclosure

cc: D. G. Holland
U. S. Shoop
Project 728

FRAMATOME ANP, Inc.
2101 Horn Rapids Road - Richland, WA 99352
Tel.: 509-375-8100 Fax: 509-375-8402 www.us.framatome-anp.com

**Response to RAI on BAW-10239(P)**

Question 1:

Pages 3-2 and 3-6. Please describe in greater detail how the attachments at the guide thimble/top nozzle interface allow the top nozzle to be removed for fuel assembly reconstitution.

Response:

The Advanced Mark-BW fuel assembly utilizes a "quick-disconnect" mechanism to allow for rapid fuel assembly reconstitution. A tool that interfaces with the quick-disconnect guide thimble assembly provides a torque that exceeds the torsion detent of the quick disconnect mechanism. When rotated 90 degrees, the quick disconnect restraining features are disengaged, allowing the restraining features to fit through mating features in the top nozzle grillage so the top nozzle assembly can slip over the quick disconnect guide thimble assembly. Returning the top nozzle to its position on the fuel assembly, the same tool is used to engage the quick disconnect by rotating the quick disconnect mechanism 90 degrees in the opposite direction so that the restraining features and top nozzle mating features are not aligned. This imposes the compressive load on the top nozzle that prevents it from disengaging when handled.

Question 2:

Page 3-3. Please describe the projected impacts of increasing the pellet theoretical density beyond the current 96 percent.

Response:

Increasing the pellet density beyond the current 96% T.D. value will reduce the existing fuel porosity, which will produce a slight increase in the fuel thermal conductivity but also has the potential of increasing the onset of fuel swelling. It is anticipated that the resinter density change of higher density fuel will be less than the current 96% T.D. value. A resinter density change that is approximately one-half the present value is expected. A reduced resinter density change of approximately one-half the present 96% T.D. value is predicted to produce, for 97% T.D. fuel, best-estimate end-of-life fuel temperature decreases of less than 1% and an internal gas pressure increase of less than 1% for a typical extended-burnup fuel cycle design. It can be seen that the impact of increasing the fuel density is small.

Question 3:

Page 3-4. Please describe how the spring and dimple edges are coined.

Response:

Coining of the spring and dimple edges is accomplished during stamping of the grid strips. The Mark-BW spacer grid strips are fabricated with progressive dies that sequentially stamp each grid strip feature. The coined edges are created on the dimples by closing the die cavity to a value equal or slightly below the strip thickness to "qualify" the formation.

Question 4:

Page 3-8. What is the impact of the mid span mixing grids on the assembly cross flow during mixed core arrangements?

Response:

Due to the increased pressure drop of the mid span mixing grids, an increase in fuel assembly cross flow occurs during mixed core arrangements, where the adjacent fuel does not have mid span mixing grids. As discussed on page 5-8, mixed-core analyses demonstrate that the resulting span average cross-flows are less than the 2 ft/sec criterion. The criterion is used to preclude unacceptable flow-induced vibration of the fuel rods. The maximum fuel assembly cross flow velocity is 1.73 ft/sec.

Question 5:

Page 3-17. What is the function of the keying windows?

Response:

Keying windows, as shown on page 3-17, allow spacer grid "keys" to be inserted and removed from the spacer grids during fuel assembly fabrication. Prior to fuel rod insertion into the spacer grids, the soft stops are deflected to a predetermined value based on process qualification testing and the keys are inserted into each spacer grid and rotated 90 degrees. The rotation of the keys laterally restrains the grid stops increasing the spacer grid cell size, which reduces the insertion load required to install fuel rods into the fuel bundle. After all fuel rods are inserted into the fuel assembly, the keys are removed from the spacer grids to restore the spacer grid grip forces on the fuel rods.

UNITED STATES
NUCLEAR REGULATORY COMMISSION
WASHINGTON, D.C. 20555-0001

April 7, 2003

Mr. James F. Mallay
Director, Regulatory Affairs
Framatome ANP
3315 Old Forest Road
P.O. Box 10935
Lynchburg, VA 24506-0935

SUBJECT: REQUEST FOR ADDITIONAL INFORMATION (RAI) - TOPICAL REPORT BAW-10239(P), REVISION 0, "ADVANCED MARK-BW FUEL ASSEMBLY MECHANICAL DESIGN TOPICAL REPORT" (TAC NO. MB7551)

Dear Mr. Mallay:

By letter dated April 30, 2002, Framatome ANP submitted for staff review Topical Report BAW-10239(P), Revision 0, "Advanced Mark-BW Fuel Assembly Mechanical Design Topical Report." The staff has completed its preliminary review of BAW-10239(P), Revision 0, and has identified a number of items for which additional information is needed to continue its review. This request was discussed with you on April 2, 2003, and it was agreed that a response would be provided within 30 days of receipt of this letter. Partial submittals would be welcomed to minimize delays.

Pursuant to 10 CFR 2.790, we have determined that the enclosed RAI does not contain proprietary information. However, we will delay placing the RAI in the public document room for a period of ten (10) working days from the date of this letter to provide you with the opportunity to comment on the proprietary aspects only. If you believe that any information in the enclosure is proprietary, please identify such information line by line and define the basis pursuant to the criteria of 10 CFR 2.790.

If you have any questions, please call me at (301) 415-1436.

Sincerely,

Drew Holland, Project Manager, Section 2
Project Directorate IV
Division of Licensing Project Management
Office of Nuclear Reactor Regulation

Project No. 728

Enclosure: Request for Additional Information

REQUEST FOR ADDITIONAL INFORMATION

TOPICAL REPORT BAW-10239(P), REVISION 0,

"ADVANCED MARK-BW FUEL ASSEMBLY MECHANICAL DESIGN TOPICAL REPORT"

PROJECT NO. 728

1. Pages 3-2 and 3-6. Please describe in greater detail how the attachments at the guide thimble/top nozzle interface allow the top nozzle to be removed for fuel assembly reconstitution.

2. Page 3-3. Please describe the projected impacts of increasing the pellet theoretical density beyond the current 96 percent.

3. Page 3-4. Please describe how the spring and dimple edges are coined.

4. Page 3-8. What is the impact of the mid span mixing grids on the assembly cross flow during mixed core arrangements?

5. Page 3-17. What is the function of the keying windows?

FRAMATOME ANP

April 30, 2002
NRC:02:022

Document Control Desk
ATTN: Chief, Planning, Program and Management Support Branch
U.S. Nuclear Regulatory Commission
Washington, D.C. 20555-0001

**Request for Review of BAW-10239(P), Revision 0, Advanced Mark-BW Fuel Assembly Mechanical Design Topical Report**

Ref.: 1. Letter, James F. Mallay (Framatome ANP), to Document Control Desk (NRC), "Request for Review of BAW-10186P Revision 1, Supplement 1, Mark-BW Extended Burnup," NRC:01:048, November 19, 2001.

Framatome ANP requests the NRC's review and approval for referencing in licensing actions the topical report BAW-10239(P), Revision 0, Advanced Mark Fuel Assembly Mechanical Design Topical Report. One CD containing a proprietary version of the report and one CD containing a non-proprietary version of the report are enclosed. We request that the NRC approve this report by December 1, 2002.

The Advanced Mark-BW fuel assembly design is intended for operation in Westinghouse three- and four-loop reactors using a 17x17 fuel rod array. The topical report BAW-10239(P) provides an evaluation of the performance of the Advanced Mark-BW fuel assembly in a sample reactor against the general criteria defined in Section 4.2 of the Standard Review Plan (NUREG –0800). A set of specific criteria consistent with Section 4.2 of the Standard Review Plan has been previously established in topical reports reviewed and approved by the NRC.

The Advanced Mark-BW fuel assembly is a natural evolution of the Mark-BW fuel design that offers additional improvements in performance. The Mark-BW fuel design was previously reviewed and approved by the NRC.

The advanced Mark-BW fuel assembly is designed to achieve a peak fuel rod burnup of 62,000 MWd/MTU, which is consistent with the burnup limits supported in Reference 1.

Framatome ANP considers some of the information contained in the enclosed report to be proprietary. As required by 10 CFR 2.790(b), an affidavit is enclosed to support the withholding of the information from public disclosure.

Very truly yours,

Gerald S. Holm for

James F. Mallay, Director
Regulatory Affairs

Enclosures

cc: R. Caruso
D. G. Holland
Project 693

# AFFIDAVIT

STATE OF WASHINGTON )
) ss.
COUNTY OF BENTON )

1. My name is Jerald S. Holm. I am Manager, Product Licensing, for Framatome ANP ("FRA-ANP"), and as such I am authorized to execute this Affidavit.

2. I am familiar with the criteria applied by FRA-ANP to determine whether certain FRA-ANP information is proprietary. I am familiar with the policies established by FRA-ANP to ensure the proper application of these criteria.

3. I am familiar with the FRA-ANP material enclosed in report BAW-10239(P) Revision 0, transmitted with the letter NRC:02:022, and referred to herein as "Document." Information contained in this Document has been classified by FRA-ANP as proprietary in accordance with the policies established by FRA-ANP for the control and protection of proprietary and confidential information.

4. This Document contains information of a proprietary and confidential nature and is of the type customarily held in confidence by FRA-ANP and not made available to the public. Based on my experience, I am aware that other companies regard information of the kind contained in this Document as proprietary and confidential.

5. This Document has been made available to the U.S. Nuclear Regulatory Commission in confidence with the request that the information contained in this Document be withheld from public disclosure.

6. The following criteria are customarily applied by FRA-ANP to determine whether information should be classified as proprietary:

(a) The information reveals details of FRA-ANP's research and development plans and programs or their results.

(b) Use of the information by a competitor would permit the competitor to significantly reduce its expenditures, in time or resources, to design, produce, or market a similar product or service.

(c) The information includes test data or analytical techniques concerning a process, methodology, or component, the application of which results in a competitive advantage for FRA-ANP.

(d) The information reveals certain distinguishing aspects of a process, methodology, or component, the exclusive use of which provides a competitive advantage for FRA-ANP in product optimization or marketability.

(e) The information is vital to a competitive advantage held by FRA-ANP, would be helpful to competitors to FRA-ANP, and would likely cause substantial harm to the competitive position of FRA-ANP.

7. In accordance with FRA-ANP's policies governing the protection and control of information, proprietary information contained in this Document has been made available, on a limited basis, to others outside FRA-ANP only as required and under suitable agreement providing for nondisclosure and limited use of the information.

8. FRA-ANP policy requires that proprietary information be kept in a secured file or area and distributed on a need-to-know basis.

9. The foregoing statements are true and correct to the best of my knowledge, information, and belief.

Jerald S Holm

SUBSCRIBED before me this 30th

day of April, 2001.

Susan K McCoy

Susan K. McCoy
NOTARY PUBLIC, STATE OF WASHINGTON
MY COMMISSION EXPIRES: 1/10/04

SUSAN K. McCOY
COMMISSION EXPIRES
NOTARY
PUBLIC
1-10-04
STATE OF WASHINGTON

FRAMATOME ANP

BAW-10239(NP)
Revision 0
43-10239NP-00

# Advanced Mark-BW Fuel Assembly Mechanical Design Topical Report

March 2002

Framatome ANP, Inc.

## Nature of Changes

| Item | Section(s) or Page(s) | Description and Justification |
|---|---|---|
| Note: | | This is a new document. |

## Contents

1.0 Introduction ..... 1-1

2.0 Summary ..... 2-1

3.0 Advanced Mark-BW Design Description ..... 3-1
- 3.1 Fuel Assembly ..... 3-1
- 3.2 Fuel Rod ..... 3-2
- 3.3 Intermediate Grids ..... 3-3
- 3.4 Low Pressure Drop Top Nozzle ..... 3-5
- 3.5 Debris Filter (TRAPPER) Bottom Nozzle ..... 3-6
- 3.6 M5 Alloy Guide Thimble and Instrument Sheath Tubing ..... 3-6
- 3.7 Materials ..... 3-7
- 3.8 Mid-Span Mixing Grids (MSMGs) ..... 3-7

4.0 LTA Program ..... 4-1

5.0 Design Evaluation ..... 5-1
- 5.1 Fuel System Damage Criteria ..... 5-1
  - 5.1.1 Stress ..... 5-1
  - 5.1.2 Cladding Strain ..... 5-7
  - 5.1.3 Cladding Fatigue ..... 5-8
  - 5.1.4 Fretting ..... 5-8
  - 5.1.5 Oxidation, Hydriding, and Crud Buildup ..... 5-10
  - 5.1.6 Fuel Rod Bow ..... 5-11
  - 5.1.7 Axial Growth ..... 5-11
  - 5.1.8 Fuel Rod Internal Pressure ..... 5-12
  - 5.1.9 Assembly Liftoff ..... 5-13
- 5.2 Fuel Rod Failure Criteria ..... 5-14
  - 5.2.1 Internal Hydriding ..... 5-14
  - 5.2.2 Cladding Collapse ..... 5-14
  - 5.2.3 Overheating of Cladding ..... 5-15
  - 5.2.4 Overheating of Fuel Pellets ..... 5-16
  - 5.2.5 Pellet/Cladding Interaction ..... 5-17
  - 5.2.6 Cladding Rupture ..... 5-17
- 5.3 Fuel Coolability ..... 5-17
  - 5.3.1 Cladding Embrittlement ..... 5-17
  - 5.3.2 Violent Expulsion of Fuel ..... 5-17
  - 5.3.3 Fuel Rod Ballooning ..... 5-17
  - 5.3.4 Fuel Assembly Structural Damage from External Forces ..... 5-17
- 5.4 Design Evaluation Summary ..... 5-20

6.0 References ..... 6-1

## Tables

3.1 Comparison of Advanced Mark-BW and Mark-BW Fuel Assembly Parameters ..... 3-9

3.2 Comparison of Advanced Mark-BW and Mark-BW Fuel Rod Parameters ..... 3-10

3.3 Comparison of Advanced Mark-BW and Mark-BW Grid Parameters ..... 3-11

3.4 Comparison of Advanced Mark-BW and Mark-BW Guide Thimble and Instrument Sheath Parameters ..... 3-12

3.5 Summary of Component Materials ..... 3-13

4.1 Mark-BW/X1 LTA Core Operation History ..... 4-3

5.1 Summary of Reactor Coolant System Design Transients ..... 5-22

## Figures

3.1 Advanced Mark-BW Fuel Assembly ..... 3-14
3.2 Fuel Rod Assembly ..... 3-15
3.3 Intermediate-Vaned Spacer Grid Assembly ..... 3-16
3.4 End Grid Assembly ..... 3-16
3.5 Intermediate Spacer Grid Features ..... 3-17
3.6 Inner Grid Strip Features ..... 3-17
3.7 Mixing Vane Pattern ..... 3-18
3.8 Intermediate Spacer Grid Restraint System ..... 3-18
3.9 Top End Grid Restraint ..... 3-19
3.10 Bottom End Grid Restraint ..... 3-19
3.11 Mid-Span Mixing Grid ..... 3-20
3.12 Mid-Span Mixing Grid Details ..... 3-21
3.13 Guide Thimble Assembly ..... 3-22
3.14 QD Top Nozzle Assembly ..... 3-23
3.15 Debris Filter Bottom Nozzle - Installed ..... 3-24
3.16 Debris Filter Bottom Nozzle Structure ..... 3-24
3.17 Coarse Mesh Filter Plate Ligament Geometry ..... 3-25
3.18 Fine-Mesh Filter Plate Ligament Geometry ..... 3-26
4.1 Mark-BW/X1 LTA Core Positions ..... 4-4
5.1 Core Loading – All Advanced Mark-BW Fuel Configuration Structural Analysis ..... 5-23
5.2 Core Loading – Mixed Core Configuration Number 1 - Structural Analysis ..... 5-24
5.3 Core Loading – Mixed Core Configuration Number 2 - Structural Analysis ..... 5-25

## Nomenclature

| Acronym | Definition |
|---|---|
| AOO | anticipated operational occurrence |
| ASME | American Society of Mechanical Engineers |
| B&PV | Boiler and Pressure Vessel |
| BOL | beginning of life |
| BWU | Framatome ANP CHF correlation |
| CHF | critical heat flux |
| DNB | departure from nucleate boiling |
| DNBR | departure from nucleate boiling ratio |
| ECCS | Emergency Core Cooling System |
| EG | end grid |
| EOL | end of life |
| FIV | flow-induced vibration |
| GWd/MTU | gigawatt-day per metric ton Uranium |
| ID | inside diameter |
| LHR | linear heat rate |
| LOCA | loss-of-coolant accident |
| LTA | lead test assembly |
| MSMG | mid-span mixing grid |
| MWd/MTU | megawatt-days per metric ton Uranium |
| NRC | U. S. Nuclear Regulatory Commission |
| OBE | Operational Base Earthquake |
| OD | outside diameter |
| PIE | post-irradiation examination |
| ppm | parts per million |
| psi | pounds per square inch |
| PWR | pressurized water reactor |
| QD | quick disconnect |
| RCCA | rod cluster control assembly |
| RMS | root mean square |
| RXA | recrystallized annealed |

## Nomenclature *(Continued)*

| Acronym | Definition |
|---|---|
| SER | Safety Evaluation Report |
| SG | spacer grid |
| SRP | Standard Review Plan |
| S.S. | stainless steel |
| SSE | Safe Shutdown Earthquake |
| TD | theoretical density |
| $UO_2$ | uranium dioxide |

## 1.0 Introduction

Framatome ANP has developed the Advanced Mark-BW fuel assembly design for use in Westinghouse three- and four-loop reactors using a 17x17 fuel rod array. This report provides an evaluation of the performance of the Advanced Mark-BW fuel assembly in a sample reactor against the general criteria defined in Section 4.2 of the Standard Review Plan (SRP) (Reference 1). A set of specific criteria consistent with Section 4.2 of the SRP has been previously established in topical reports reviewed and approved by the U. S. Nuclear Regulatory Commission (NRC).

This report is divided into eight major sections, each addressing a significant aspect of the Advanced Mark-BW fuel assembly, focusing on the primary new features, which include the mid-span flow mixing grids and quick disconnect (QD) top nozzle. Section 3.0 describes the Advanced Mark-BW design, highlighting the distinguishing features. Section 4.0 presents the lead test assembly (LTA) program. Section 5.0 provides the fuel assembly and fuel rod example evaluations that address the performance of the Advanced Mark-BW fuel assembly against the criteria of Section 4.2 of the SRP, NUREG-0800 (Reference 1).

Framatome ANP will perform plant-specific evaluations of the performance of the Advanced Mark-BW fuel assembly, which will reference the NRC-approved version of this topical report. These plant-specific evaluations will not be required to be submitted to the NRC for review and approval unless the licensee-performed evaluation per the requirements of 10 CFR 50.59 determines that NRC review and approval is required. The evaluation process described in this report will also be used to justify small changes in the Advanced Mark-BW fuel assembly design without specific NRC review and approval. Examples of such small changes would be fuel rod or fuel assembly length to accommodate reactor-specific dimensions, modifications of spacer grids that do not affect the NRC-approved departure from nucleate boiling ratio (DNBR) correlation for the spacer grids, and substitution of components that have been separately approved by the NRC.

## 2.0 Summary

The Advanced Mark-BW fuel assembly is a natural evolution of the Mark-BW fuel design that offers additional improvements in performance. The Mark-BW fuel design was reviewed and approved by the NRC for generic use in Reference 2. The significant differences between the Advanced Mark-BW fuel assembly and the Mark-BW fuel assembly described in Reference 2 are summarized below under three categories. Category 1: features implemented on a plant-specific basis since the NRC review and approval of Reference 2. Category 2: features related to the use of M5 material that were reviewed and approved by the NRC in Reference 3. Category 3: features that are new.

Category 1:

- Debris filter bottom nozzle
- Reduction in the number of grid restraining guide thimbles from 12 to 8
- Low pressure drop top nozzle

Category 2:

- M5™* fuel rod cladding
- M5 guide thimbles
- M5 instrument tube sheath
- M5 spacers and mixing grids

Category 3:

- Mid-span mixing grids (MSMGs)
- QD top nozzle connection

The two new features specific to the Advanced Mark-BW design further enhance the design's thermal-hydraulic and mechanical performance.

Improved thermal mixing with the MSMGs increases departure from nucleate boiling (DNB) margins, which provide for more efficient fuel cycle designs. The QD top nozzle facilitates fuel assembly reconstitution, if needed, with quick and reliable top nozzle removal and installation.

---

* M5 is a trademark of Framatome ANP.

The Advanced Mark-BW program was a cooperative effort with Dominion Generation to thoroughly test the design prior to batch implementation. Four "Mark-BW/X1" LTAs were inserted in the core of Dominion Generation's North Anna Unit 1 in 1997. The LTAs successfully completed three cycles of operation with leaker-free performance with a peak pin burnup of ~57 GWd/MTU.

The successful operation to date of LTAs supports the acceptability of the fuel assembly design. In addition, the extensive operating experience of the standard Mark-BW design provides a performance database for many of the same components and key design features that are common to the Advanced Mark-BW fuel assembly. These common key features, which include the floating intermediate spacer grid and bottom nozzle-seated fuel rod design concepts, serve to provide well-predicted and consistent irradiation performance and models, and further enhance the Advanced Mark-BW design bases.

Extensive operating experience and data of Framatome ANP pressurized water reactor (PWR) fuel throughout the world, utilizing the M5 alloy, also provide design bases for consistent irradiation performance and models used for the Advanced Mark-BW fuel design. The M5 alloy and associated models and methods are approved for use in Reference 3. The Safety Evaluation Report (SER) for Reference 3 limits the Mark-BW fuel rod burnup to 60,000 MWd/MTU. The justification for increasing the burnup limit to 62,000 MWd/MTU is provided in Reference 4. The Advanced Mark-BW fuel assembly is designed to achieve a peak fuel rod burnup of 62,000 MWd/MTU, which is consistent with the burnup limits supported in Reference 4.

Based on the results of comprehensive testing, analysis, and reactor performance, the Advanced Mark-BW fuel assembly design is acceptable for batch implementation in Westinghouse-designed PWRs using 17x17-type fuel assemblies.

## 3.0 Advanced Mark-BW Design Description

The Advanced Mark-BW fuel assembly comprises a 17x17 rod array specifically developed for use in Westinghouse-designed three- and four-loop nuclear reactors. The fuel assembly maintains the same interface compatibility and many of the reactor-proven features of the Mark-BW fuel (Reference 2). Figure 3.1 highlights the primary design features of the Advanced Mark-BW fuel assembly. Table 3.1 provides a comparison of Advanced Mark-BW and standard Mark-BW fuel assembly parameters.

### 3.1 *Fuel Assembly*

The Advanced Mark-BW is an improved 17x17 fuel assembly designed specifically for Westinghouse-designed PWRs and utilizing many proven features of the Mark-BW design.

The Advanced Mark-BW fuel assembly utilizes 11 spacer grids that, with the 24 guide thimbles, instrument tube, and top and bottom nozzles, provide the structural cage for the 264 fuel rod assemblies. The top and bottom end grids are made from Inconel 718 strip material. The six intermediate grids and three MSMGs are constructed from M5 strip material. The intermediate grids are those between the end grids, not including the MSMGs. The M5 clad fuel rods rest on the bottom nozzle and are laterally supported by the top and bottom end spacer grids and six intermediate spacer grids.

The Advanced Mark-BW intermediate spacer grids are not mechanically attached to the guide thimbles, which allow the grids to "float" and accommodate any axial differential growth between the fuel rods and guide thimbles. Ferrules around 8 of the 24 guide thimbles are designed to limit the axial displacement of the intermediate grids. The axial location of the spacer grids remains unchanged from previous Mark-BW designs. This arrangement reduces the axial forces on the guide thimbles and fuel rods, and the resultant forces on the spacer grids. In addition, guide thimble axial loads are reduced, given that the weight of the fuel rods passes directly to the bottom nozzle.

The Advanced Mark-BW spacer grid design utilizes hardstops/softstops in the cells to support the fuel rod. The fuel assembly fabrication process utilizes grid keying to prevent scratching or other damage to the fuel rod cladding. Advanced Mark-BW end and intermediate grids maintain the same grid periphery lead-in features as used in the Mark-BW design to ensure good fuel assembly-handling performance.

Features on the guide thimble assemblies constrain axial motion of the end grids. The bottom end grid is restrained through stainless steel sleeves that are welded to the bottom end grid. The grid sleeves are mechanically crimped to the guide thimble lower end plugs that are fixed to the bottom nozzle. Top end grid motion is restrained by stainless steel spacer sleeves that are welded to the top end grid and located on the guide thimbles between the bottom of the top nozzle and the top of the top end grid.

A QD mechanism is utilized on the Advanced Mark-BW fuel assembly. The attachments at the guide thimble/top nozzle interface allow the top nozzle to be removed for fuel assembly reconstitution. The Mark-BW leaf spring design, consisting of four sets of leaf springs made of Inconel 718 material, is also utilized on the Advanced Mark-BW assembly. Located in the top nozzle, the spring maintains positive fuel assembly contact with the core support structure under all normal operating conditions; it also maintains positive holddown margin for the Advanced Mark-BW hydraulic forces.

The bottom nozzle is the "TRAPPER™*" debris filter bottom nozzle used on the standard Mark-BW fuel assembly.

All key dimensions are maintained to ensure compatibility with existing interfaces. The dimensions presented are current values, which are subject to change for optimization as additional operating data are acquired while ensuring that all design bases are met.

## 3.2 *Fuel Rod*

The Advanced Mark-BW fuel rod assembly utilizes the M5 alloy. The use of the M5 alloy was previously approved in Reference 3. The M5 cladding significantly increases resistance to corrosion associated with longer cycles, high temperatures, and high burnup. The Advanced Mark-BW fuel rod length is slightly longer to improve pin pressure margins. The fuel rod length is a function of the reactor design and may vary from plant to plant. Table 3.2 provides a comparison of Advanced Mark-BW and standard Mark-BW fuel rod parameters. The schematic diagram of Figure 3.2 shows an axial cross section of the Advanced Mark-BW fuel rod.

---

* TRAPPER is a trademark of Framatome ANP.

The fuel rod design consists of uranium dioxide ($UO_2$) pellets contained in a seamless M5 tube, with M5 end caps welded at each end. The design utilizes a 144-inch fuel stack length. The fuel pellets have a diameter of 0.3225 inch. The fuel rod cladding has a 0.374-inch outside diameter (OD) and a 0.0225-inch wall thickness. This configuration leaves a small clearance (approximately 0.003-inch radial clearance) between the inside diameter (ID) of the cladding and the OD of the fuel pellets. The fuel rod utilizes one stainless steel spring in the upper plenum to prevent the formation of fuel stack gaps during shipping and handling, while also allowing for the expansion of the fuel stack during operation. The fuel stack rests on the lower end cap. The lower end cap is made from M5 and has a bullet-nose shape to provide a smooth flow transition, in addition to facilitating reinsertion of the rods into the assembly if any rods are removed after the assemblies have been irradiated (e.g., during fuel examination programs). The upper end cap is also made of M5 and has a grippable top-hat shape that allows for the removal of the fuel rods from the fuel assembly, if necessary. The upper end cap has a hole to permit evacuation and back-filling of the fuel rod with helium gas prior to re-sealing.

The fuel pellets are a sintered, high density ceramic. The fuel pellets are cylindrically shaped with a dish at each end. The corners of the pellets have an outward land taper (chamfer) that eases the loading of the pellets into the cladding. The dish and taper geometry also reduces the tendency for the pellets to assume an hourglass shape during operation. The present design density of the pellets is [ ]% theoretical density (TD) that may increase as pellet fabrication improvements occur. Pellet enrichments may be as high as 5.0 w/o U-235.

The Advanced Mark-BW fuel rod design can also utilize axial blanket and gadolinia fuel configurations similar to the standard Mark-BW design. The axial blanket fuel stack contains three zones: a central portion of enriched sintered $UO_2$ pellets and an axial blanket region at each end of the stack. The axial blanket region consists of sintered $UO_2$ pellets with a $U^{235}$ enrichment of a low weight percent. The fuel pellet may also utilize gadolinium, which serves as a poison to control peaking. The fuel rod dimensions presented are current and subject to change for optimization as additional operating data are acquired, while ensuring that all design bases are met.

### 3.3 *Intermediate Grids*

The Advanced Mark-BW spacer grids are a direct evolution of Mark-BW spacer grids. The Advanced Mark-BW grids use the M5 alloy to improve corrosion resistance and reduce

irradiation growth. The use of the M5 alloy for spacer grids was previously approved in Reference 3. Table 3.3 provides a comparison of Advanced Mark-BW and standard Mark-BW spacer grid parameters.

Figure 3.3 and Figure 3.4 illustrate the Advanced Mark-BW flow-mixing intermediate and end spacer grid assemblies, respectively.

Figure 3.5 and Figure 3.6 illustrate the various features press-formed into the strip. For a given fuel rod cell, a combination of springs (softstops) and dimples (hardstops) acting in two orthogonal planes support each rod. All spring and dimple edges are coined to avoid scratching of fuel rods during loading. Tight control of dimple and spring heights ensures a constant, uniform rod pitch and fuel rod restraint load.

Each guide and instrumentation thimble cell features saddles and scallops facilitating loading and support of the thimbles. A weld, performed at each strip intersection on both faces of the assembled grid, secures the strips. Grid strip height and thickness are optimized to meet crush and impact strength, pressure drop, and geometry requirements.

The Advanced Mark-BW fuel assemblies may utilize two types of intermediate spacer grid assemblies: vaned and vaneless. Intermediate vaned (mixing) grids are used in the high-heat flux region of the fuel assembly to promote mixing of the coolant. The vaned grid incorporates mixing vanes in the strip, projecting from the trailing (upper) edges into the coolant stream with the typical pattern shown in Figure 3.7.

The Advanced Mark-BW outer strip design of the intermediate and end grids, as shown in Figure 3.3, Figure 3.4, and Figure 3.5, incorporates many handling enhancement features, which include:

- Welded, reinforced guide vane
- Dimpled, reinforced outer strip
- Column-structured corner

To ensure axial alignment of spacer grids with adjacent fuel assemblies, the design incorporates stops on selected guide thimbles that limit grid axial movement after irradiation relaxation of the zirconium alloy grids. Figure 3.8 shows the stops, which are short sleeves, or ferrules, attached to the guide thimble above each intermediate grid. Figure 3.8 also illustrates the eight guide

thimble locations, in addition to the center cell, used for the intermediate grid restraint system. The sleeve below the grid on the instrument sheath is attached with two sets of swages or dimples to provide enough strength to prevent the grid from moving downward during fuel assembly handling. Figure 3.9 and Figure 3.10 show the top and bottom end grid restraint designs, respectively. Short stainless steel sleeves are attached to weld tabs employed at the guide thimble locations on the top of the upper end grid strips and the bottom of the lower end grid strips.

The top end grid sleeves seat against the bottom surface of the QD sleeve. The QD sleeves restrain the grid as the fuel rods slip through due to irradiation growth.

For the bottom end grid connection, mechanical crimping of the end grid sleeves into circular grooves in the guide thimble bottom end plugs attaches the grid to the guide thimble assembly.

The end grids use low cobalt, precipitation-hardened Inconel 718. This material ensures proper grip of the fuel rod through the design burnup range.

The Advanced Mark-BW intermediate and end grids incorporate keying windows (see Figure 3.5) that allow 100% of the fuel rod cells to be opened, or "keyed," during fuel rod insertion. The keying process comprises thin keys, inserted through the keying windows, which are rotated to restrain the softstop springs. This process is utilized to minimize fuel rod scratches, cell hardstop/softstop damage, and fuel assembly residual stresses. The keys are removed after fuel rod insertion to restore the grid's grip force on the fuel rods.

## 3.4 *Low Pressure Drop Top Nozzle*

The Advanced Mark-BW fuel assembly design incorporates a QD top nozzle assembly, as shown in Figure 3.14. The primary features of the Advanced Mark-BW top nozzle assembly include:

- Leaf spring holddown system
- Low pressure drop nozzle structure
- QD guide thimble attachment features

The QD guide thimble attachment features are unique to the Advanced Mark-BW. All other features are common to the standard Mark-BW design. A representative QD guide thimble assembly is shown in Figure 3.13. The design consists of a double-spline sleeve made of 304L

stainless steel attached to the guide thimble via a double swage. The interaction of the nozzle's machining features, QD ring splines, and QD sleeve splines keeps the locking ring contained within the top nozzle. The reconstitution tooling, designed to rotate the QD ring 90° to lock or unlock the sleeve splines, provides a positive lock when the ring rotation is complete.

The top nozzle assembly incorporates four sets of leaf springs made of Inconel 718 alloy fastened to the nozzle with Inconel 718 clamp screws. During operation, the springs prevent fuel assembly lift due to hydraulic forces. The upper leaf has an extended tang that engages a cutout in the top plate of the nozzle. This arrangement assures spring leaf retention in the unlikely event of a spring leaf or clamp screw failure.

The top nozzle structure consists of a stainless steel frame that provides for the interfaces with the reactor internals and the core components while providing for coolant flow. The top nozzle flow-hole pattern provides increased flow area compared to traditional designs, yielding a reduced pressure drop while satisfying the same strength requirements.

## 3.5 *Debris Filter (TRAPPER) Bottom Nozzle*

The TRAPPER bottom nozzle, shown in Figure 3.15 and Figure 3.16, provides a highly effective barrier to debris for the Mark-BW and Advanced Mark-BW fuel.

The stainless steel nozzle consists of a frame of deep ribs connecting the guide thimble locations and conventional legs that interface with the reactor internals. The frame distributes the primary loads on the fuel assembly through the bottom nozzle. A high-strength stainless steel alloy filter plate, as shown in Figure 3.17 and Figure 3.18, is attached to the top of the frame. The filter plate may be a coarse or fine flow-hole configuration. Upon skeleton assembly, the guide thimble lower end plugs serve to clamp the filter plate to the structural frame at internal locations. The filter plate serves two functions: It provides the seating surface for the fuel rods by distributing these loads to the structural frame, and it provides a very effective barrier to debris with acceptable pressure drop. The pressure drop performance is equivalent to that of conventional debris filter designs.

## 3.6 *M5 Alloy Guide Thimble and Instrument Sheath Tubing*

The guide thimble and instrument sheath tubing are fabricated from M5 alloy. The use of the M5 alloy for guide thimble and instrument sheath tubing was previously approved in

Reference 3. This material exhibits very low rates of irradiation growth and corrosion throughout the fuel design burnup ranges. Table 3.4 provides a comparison of Advanced Mark-BW and standard Mark-BW guide thimble and instrument sheath parameters.

The guide thimble and instrument sheath designs are common to the standard Mark-BW design. The guide thimble, shown in Figure 3.13, has two inner diameters. The larger diameter at the top provides a relatively large annular clearance that permits rapid insertion of the rod cluster control assembly (RCCA) during a reactor trip and accommodates coolant flow during normal operation. The reduced diameter section, the dashpot (located at the lower end of the tube), provides a relatively close fit with the control rods to decelerate the control rods near the end of the control rod travel. This deceleration limits the magnitude of the RCCA impact loads on the top nozzle.

Four (4) small holes located just above the dashpot allow both outflow of the water during RCCA insertion and coolant flow to control components during operation. The small flow hole in the guide thimble bolt provides flow through the reduced diameter section.

The QD sleeve is attached to the upper end of the guide thimble tube for connection to the top nozzle (see Section 3.4). An M5 lower end plug is welded onto the end of the guide thimble dashpot section. The lower end plug is internally threaded for engagement with the guide thimble bolt that connects the guide thimble to the bottom nozzle.

The instrument sheath is a uniform diameter tube located in the center lattice of the fuel assembly that extends the length of the fuel and is fixed to the bottom nozzle by a mechanical crimp.

## 3.7 *Materials*

Table 3.5 summarizes the materials utilized on the Advanced Mark-BW design, identifying the alloys and the corresponding components. All materials listed have also been implemented in the Mark-BW design. The specific use of M5 for fuel rod, cladding, guide thimbles, and spacer grids has been approved by the NRC per Reference 3.

## 3.8 *Mid-Span Mixing Grids (MSMGs)*

Figure 3.11 and Figure 3.12 illustrate the primary features of the Advanced Mark-BW MSMG assemblies. Three (3) MSMGs are incorporated onto each fuel assembly, one (1) at each

mid-span between the upper four (4) intermediate vaned grids. The MSMGs provide additional flow mixing in the high-heat flux region for improved performance and DNB margin. The MSMGs also provide additional structural rigidity to lateral loadings.

The MSMGs are attached to the guide thimbles at the sixteen (16) outer guide thimble locations shown in Figure 3.8 and Figure 3.11. These guide thimble locations are different than the eight (8) restraining guide thimble locations for the floating intermediate grids in order to help distribute the hydraulic loads. The MSMGs are rigidly attached to the guide thimbles since they are non-contacting (i.e., no axial support of the fuel rods). The MSMG attachment is a mechanical swage of the M5 sleeve that is welded to the grid and the guide thimble.

Constructed from M5, the individual MSMG strips are slotted and assembled in an egg-crate fashion and welded at each of the grid strip intersections, the same as for the intermediate grid design. Stops formed in each of the four cell walls prevent the fuel rods from contacting the mixing vanes but impose no grip force (or slip load) onto the rods; thus, these are designated "non-contacting" grids. The outer strips incorporate a wrap-around corner design to improve the handling interface.

To minimize the effect of the MSMGs on bundle pressure drop and to limit the additional material added within the active fuel region, the grids are made from strips that are thinner and shorter than those of the intermediate grids. The outer strip design precludes hang-up or damage during handling due to its large lead-in feature. A reduced grid envelope eliminates mechanical interaction with adjacent fuel assemblies during transition fuel cycles.

The MSMGs use the same mixing vane design and pattern as utilized on the Advanced Mark-BW intermediate vaned grid. The DNBR correlation for the Advanced Mark-BW fuel assembly is described in References 5, 6, and 7.

**Table 3.1 Comparison of Advanced Mark-BW and Mark-BW Fuel Assembly Parameters**

| Fuel Assembly Parameter | Mark-BW | Advanced Mark-BW |
|---|---|---|
| Fuel Assembly Overall Length, in | 159.76 | 159.85 |
| Fuel Rod Overall Length, in | 151.80 | 152.16 |
| Fuel Assembly Envelope, in | 8.425 | 8.425 |
| Fuel Rod Pitch, in | 0.496 | 0.496 |
| Fuel Rods / Assembly | 264 | 264 |
| Guide Thimbles / Assembly | 24 | 24 |
| Instrument Tubes / Assembly | 1 | 1 |
| Top Nozzle | Low pressure drop or standard<br>Multi-leaf spring | Low pressure drop<br>Multi-leaf spring |
| Top Nozzle Attachment | Locking cup/screwed connection | QD |
| Trapper Bottom Nozzle | Coarse mesh or fine mesh | Coarse mesh or fine mesh |
| End Grids | 2 monometallic Inconel 718 | 2 monometallic Inconel 718 |
| Intermediate Grids | 6 monometallic<br>recrystallized annealed (RXA) Zircaloy-4 or M5 | 6 monometallic<br>M5 |
| Intermediate Grid Types | 5 Mixing, 1 Non-mixing | 5 Mixing, 1 Non-mixing |
| Intermediate Grid / Guide Thimble Attachment | Swaged, deflection limiting ferrules with initial gap, 8 guide thimble locations | Swaged, deflection limiting ferrules with initial gap, 8 guide thimble locations |
| MSMGs | N/A | 3 monometallic M5 |
| MSMGs/Guide Thimble Attachment | N/A | Mechanical swage, 16 guide thimble locations |

**Table 3.2 Comparison of Advanced Mark-BW and Mark-BW Fuel Rod Parameters**

| Fuel Rod Parameters | Mark-BW | Advanced Mark-BW |
|---|---|---|
| Clad Material | SRA Zircaloy-4 or M5 Alloy | M5 Alloy |
| Fuel Rod Length, in | 151.80 | 152.16 |
| Cladding OD, in | 0.374 | 0.374 |
| Cladding Thickness, in | 0.024 | 0.0225 |
| Cladding ID, in | 0.326 | 0.329 |
| Clad-to-Pellet Gap, in | 0.0065 | 0.0065 |
| Fuel Pellet OD, in | 0.3195 | 0.3225 |
| Plenum Springs | Top and Bottom | Top |

**Table 3.3 Comparison of Advanced Mark-BW and Mark-BW Grid Parameters**

| Grid Parameter | Mark-BW | Advanced Mark-BW |
|---|---|---|
| **Intermediate Grid** | | |
| Material | Fully annealed recrystallized low-tin Zircaloy-4 or M5 Alloy | M5 Alloy |
| Mixing Vanes | Upper 5 grids | Upper 5 grids |
| Outer Strip Height, in | [ ] | [ ] |
| Outer Strip Thickness, in | [ ] | [ ] |
| Inner Strip Height, in | [ ] | [ ] |
| Inner Strip Thickness, in | [ ] | [ ] |
| Grid Envelope, in | 8.417 | 8.417 |
| Effective Cell Size, in | [ ] | [ ] |
| **End Grid** | | |
| Material | Inconel 718 | Inconel 718 |
| Outer Strip Height, in | [ ] | [ ] |
| Outer Strip Thickness, in | [ ] | [ ] |
| Inner Strip Height, in | [ ] | [ ] |
| Inner Strip Thickness, in | [ ] | [ ] |
| Grid Envelope, in | 8.425 | 8.425 |
| Effective Cell Size, in | [ ] | [ ] |
| **MSMG** | | |
| Material | N/A | M5 Alloy |
| Location | N/A | Top 3 intermediate grid spans |
| Outer Strip Height, in | N/A | [ ] |
| Outer Strip Thickness, in | N/A | [ ] |
| Inner Strip Height, in | N/A | [ ] |
| Inner Strip Thickness, in | N/A | [ ] |
| Grid Envelope, in | N/A | [ ] |
| Effective Cell Size, in | N/A | [ ] |

**Table 3.4 Comparison of Advanced Mark-BW and Mark-BW Guide Thimble and Instrument Sheath Parameters**

| Parameters | Mark-BW | Advanced Mark-BW |
|---|---|---|
| **Guide Thimble Parameters** | | |
| Tube Material | M5 Alloy or RXA Zircaloy-4 | M5 Alloy |
| OD (top), in | 0.482 | 0.482 |
| OD (bottom, dashpot), in | 0.450 | 0.450 |
| ID (top), in | 0.429 | 0.429 |
| ID (bottom, dashpot), in | 0.397 | 0.397 |
| Wall thickness (top and bottom), in | 0.016 | 0.016 |
| **Instrument Tube Parameters** | | |
| Material | RXA Zircaloy-4 or M5 | M5 |
| OD, in | 0.482 | 0.482 |
| ID, in | 0.450 | 0.450 |

**Table 3.5 Summary of Component Materials**

| Alloy | Component |
|---|---|
| M5 | Fuel rod clad, guide thimble, instrument sheath |
| | Guide thimble ferrules |
| | Fuel rod end caps, guide thimble plugs |
| | Intermediate grids and MSMGs |
| 304L S.S. | Top/Bottom nozzle structures |
| | Guide thimble bolt, filter plate pins |
| | Lockwire |
| | Sleeves |
| 316L S.S. | Quick-disconnect sleeve |
| 302/304 S.S. | Fuel rod spring |
| A-286 S.S. | Filter plate |
| Nickel Alloy 718 | End grids |
| | Clamp screws |
| | QD ring |
| | Holddown spring leaves |
| $UO_2$ and $UO_2 + Gd_2O_3$ | Fuel pellets |

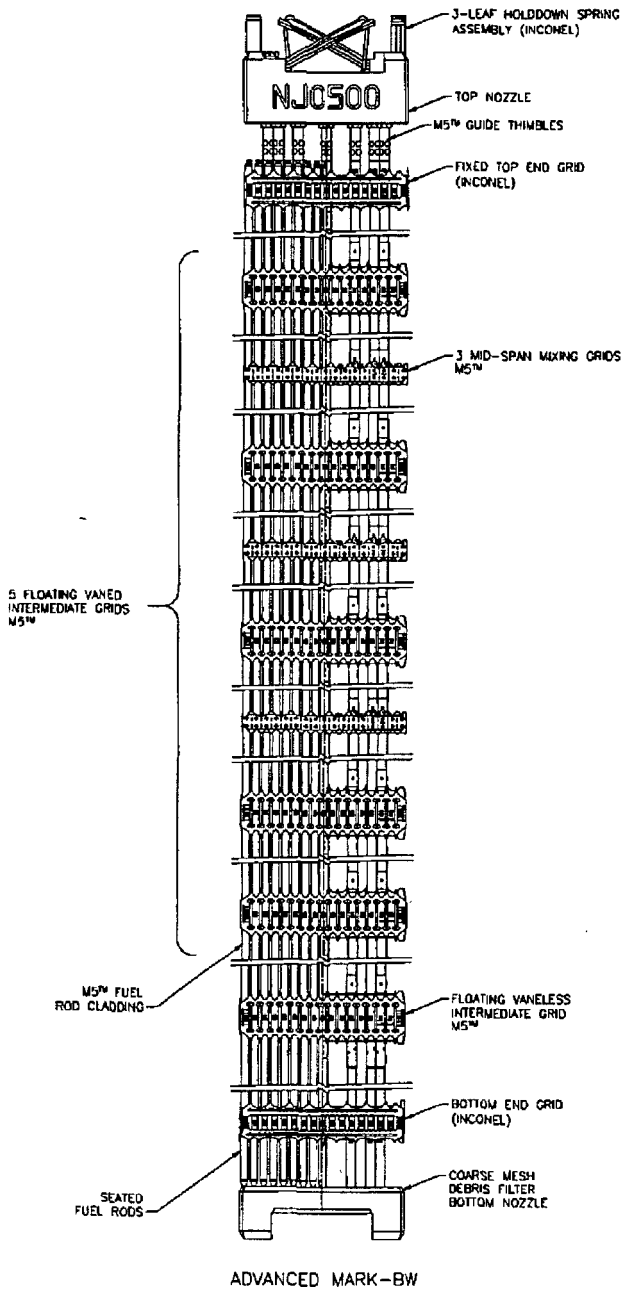


**Figure 3.1 Advanced Mark-BW Fuel Assembly**

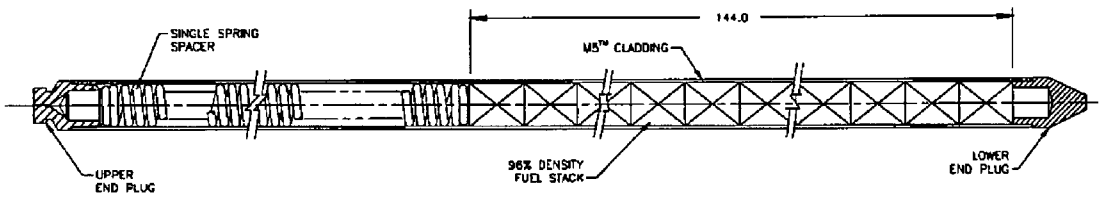


**Figure 3.2 Fuel Rod Assembly**

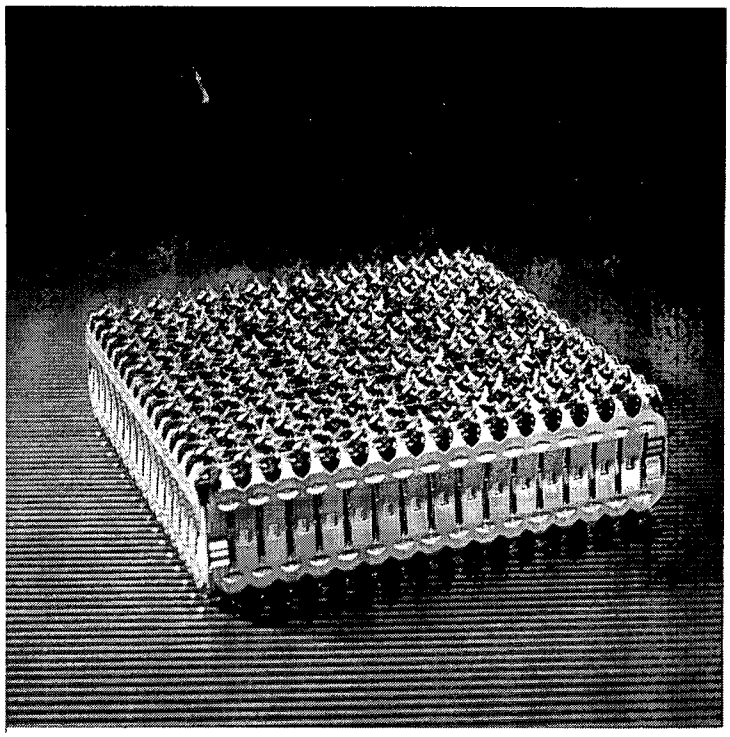

**Figure 3.3 Intermediate-Vaned Spacer Grid Assembly**

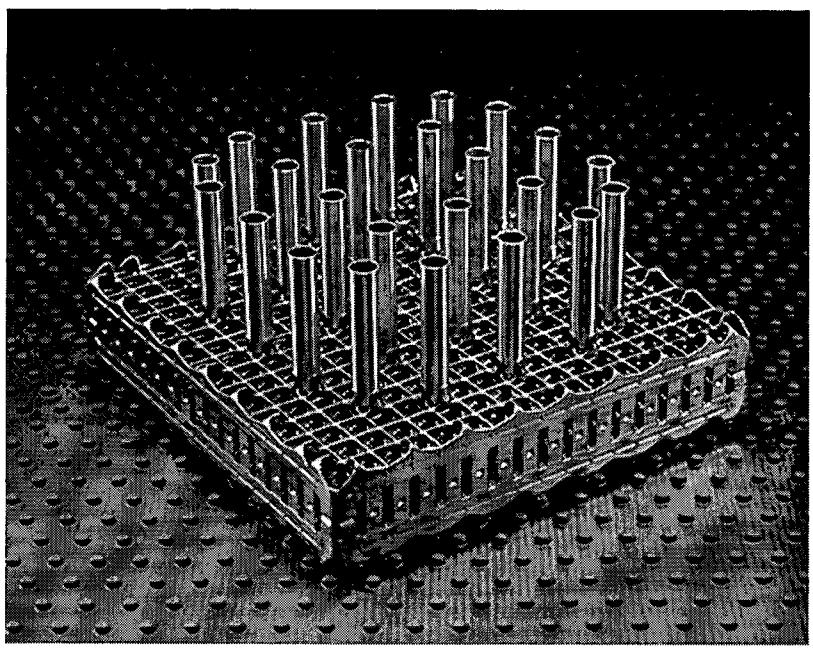

**Figure 3.4 End Grid Assembly**

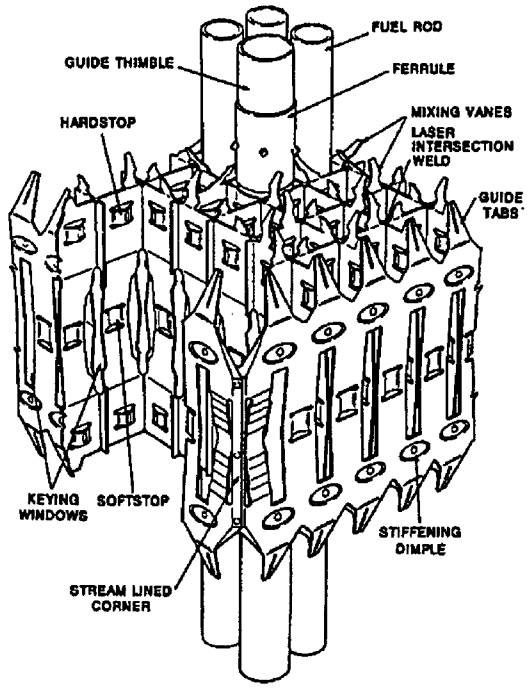


**Figure 3.5 Intermediate Spacer Grid Features**

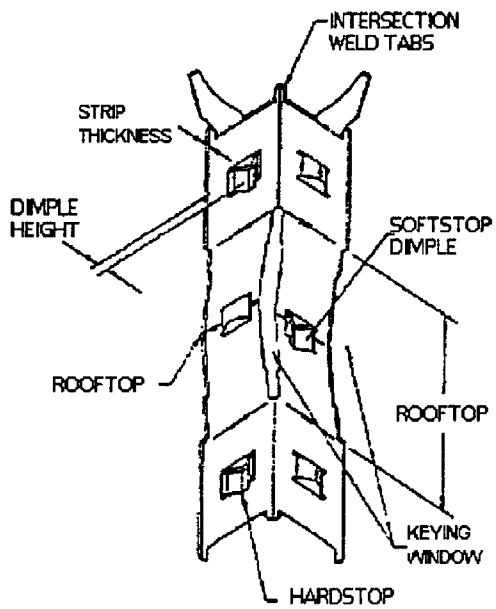


**Figure 3.6 Inner Grid Strip Features**

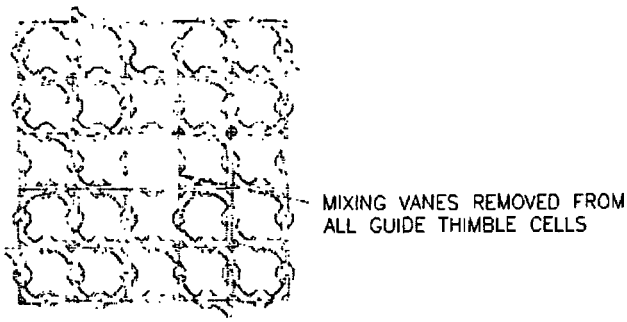


**Figure 3.7 Mixing Vane Pattern**

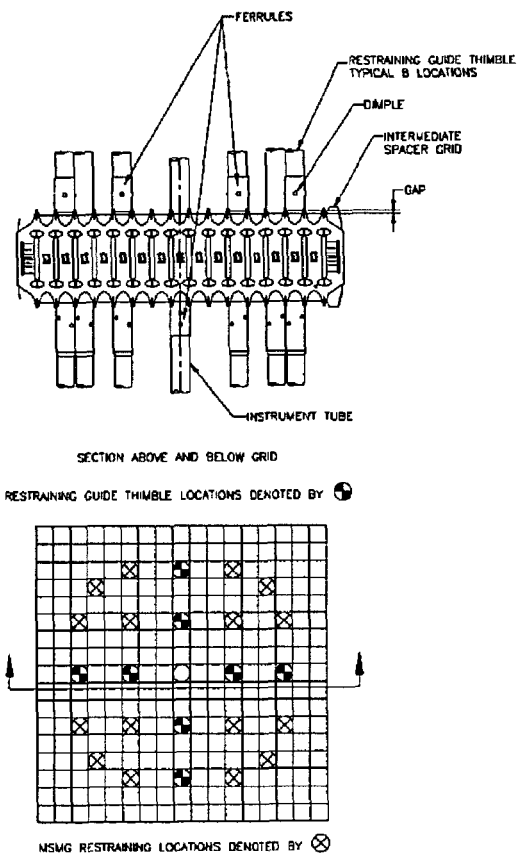


**Figure 3.8 Intermediate Spacer Grid Restraint System**

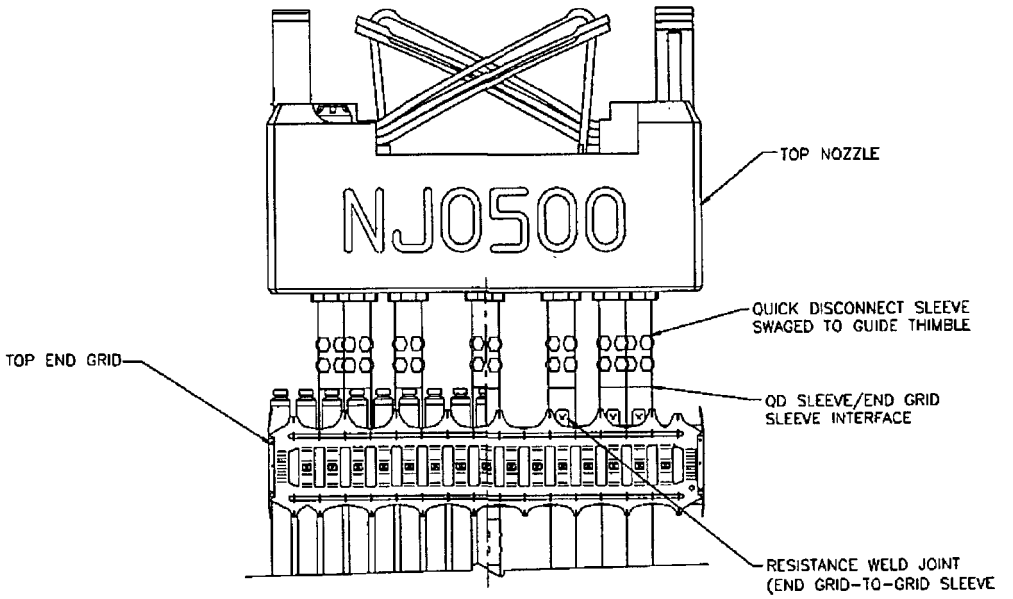


**Figure 3.9 Top End Grid Restraint**

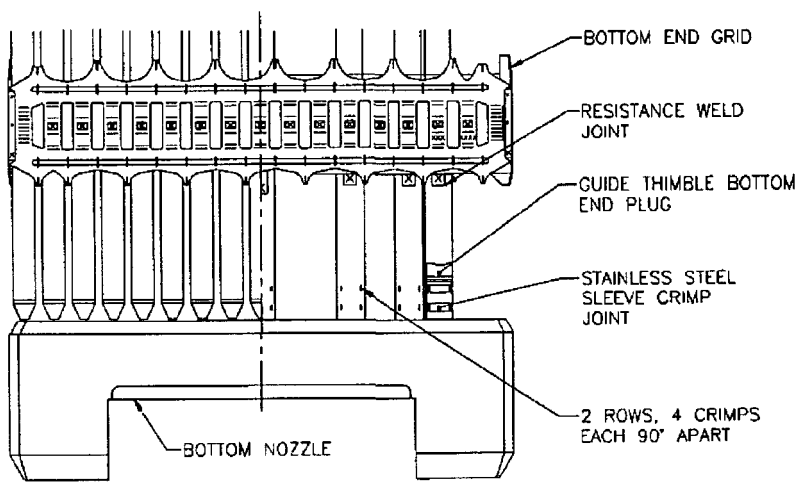


**Figure 3.10 Bottom End Grid Restraint**

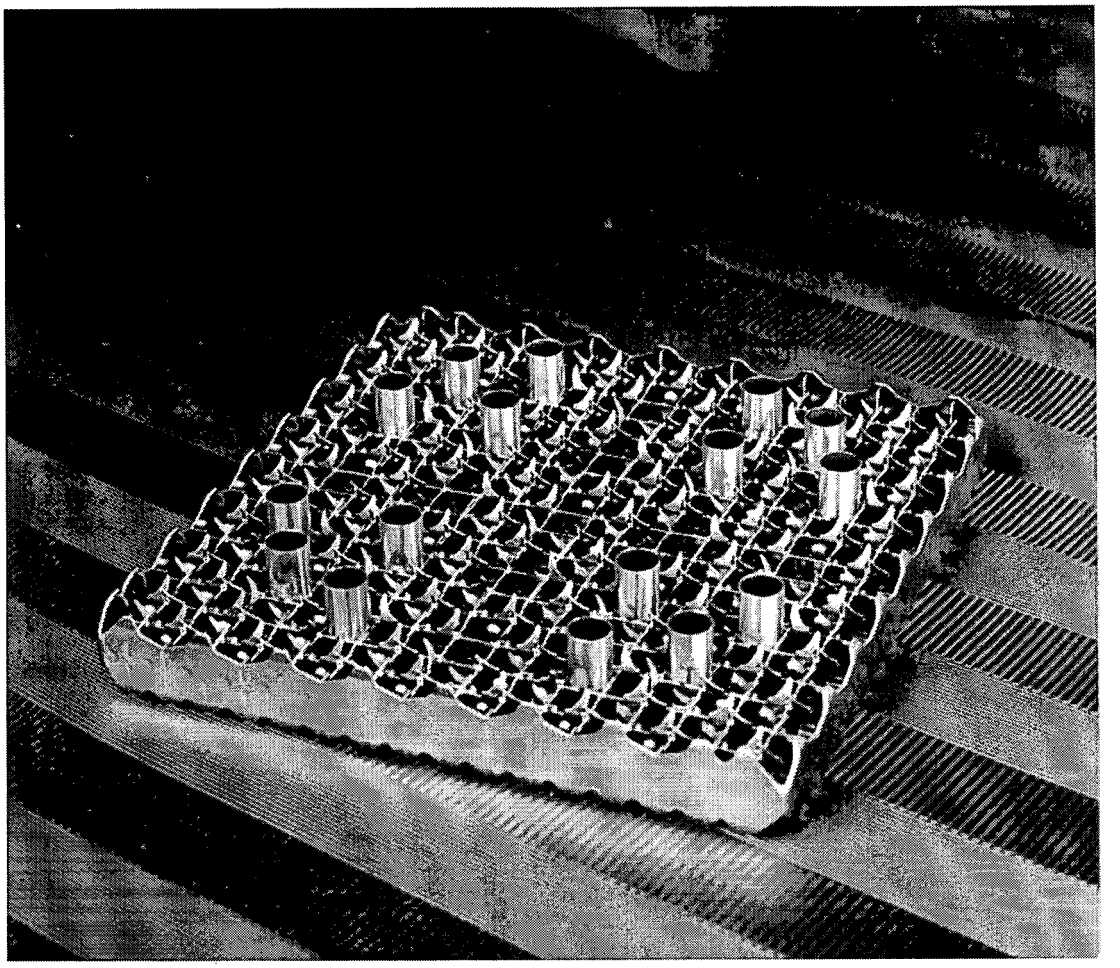

**Figure 3.11 Mid-Span Mixing Grid**

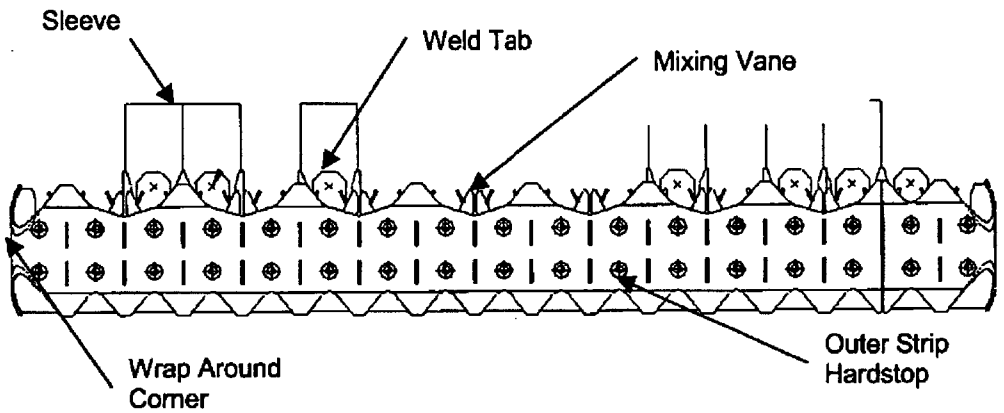


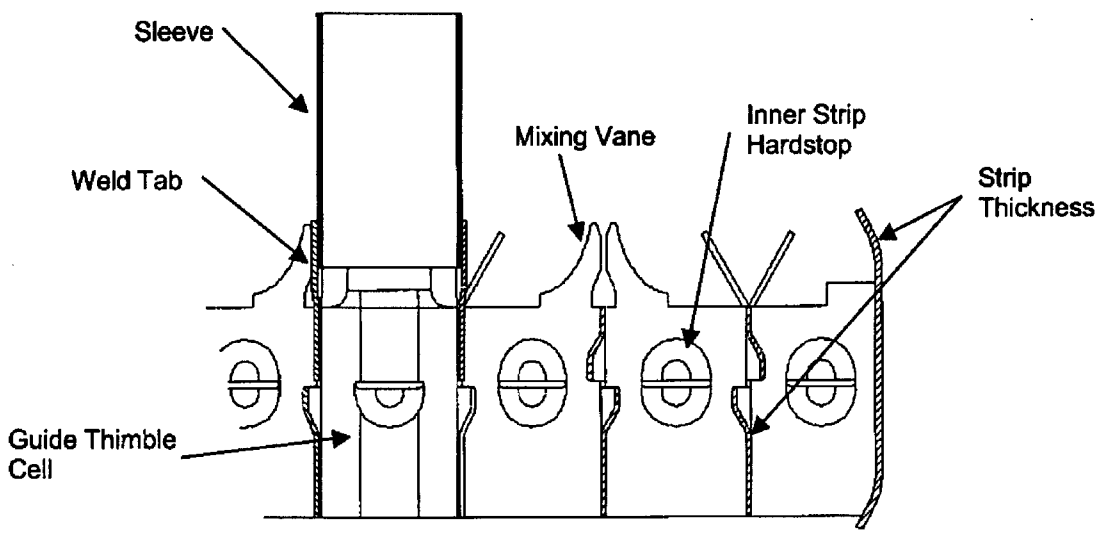


**Figure 3.12 Mid-Span Mixing Grid Details**

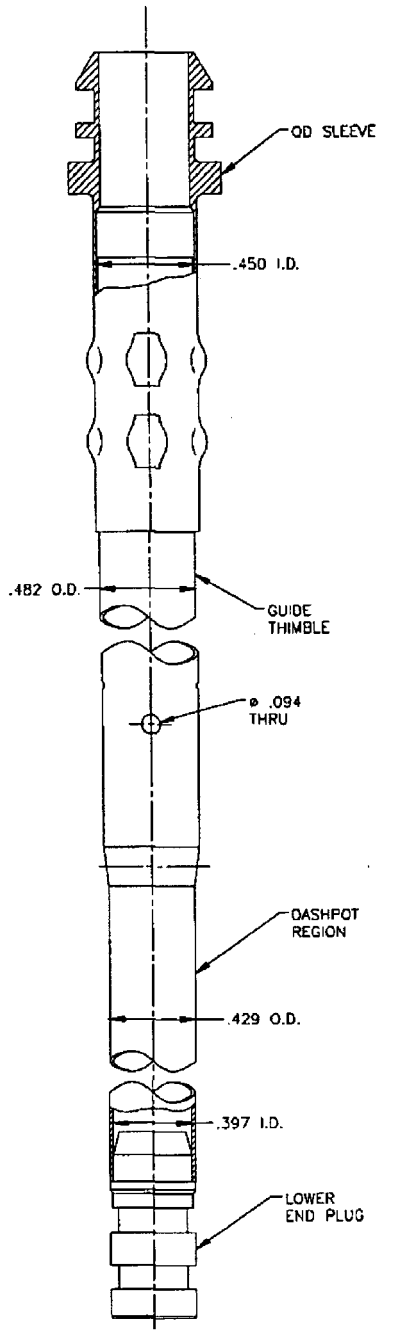


**Figure 3.13 Guide Thimble Assembly**

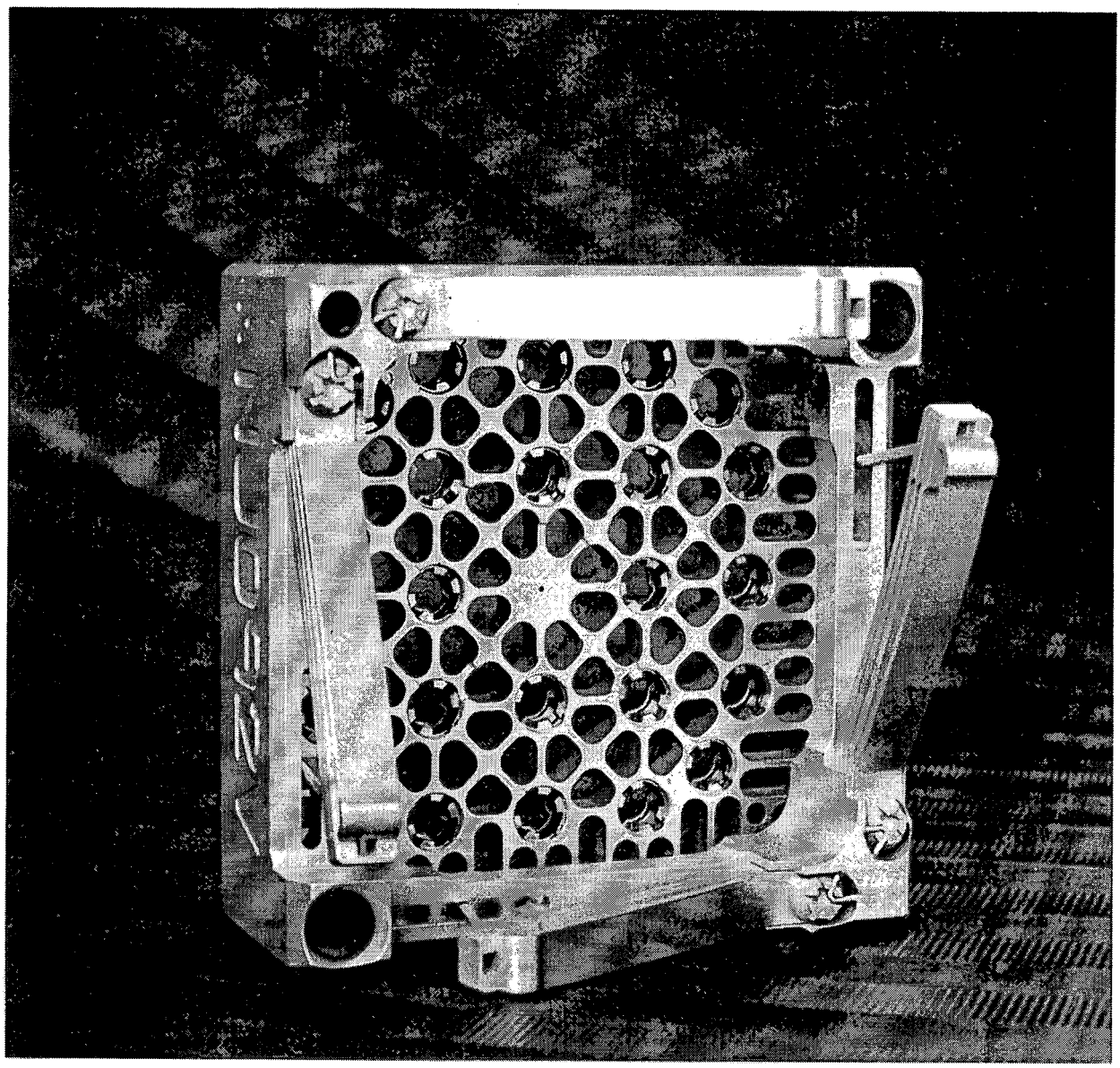

**Figure 3.14 QD Top Nozzle Assembly**

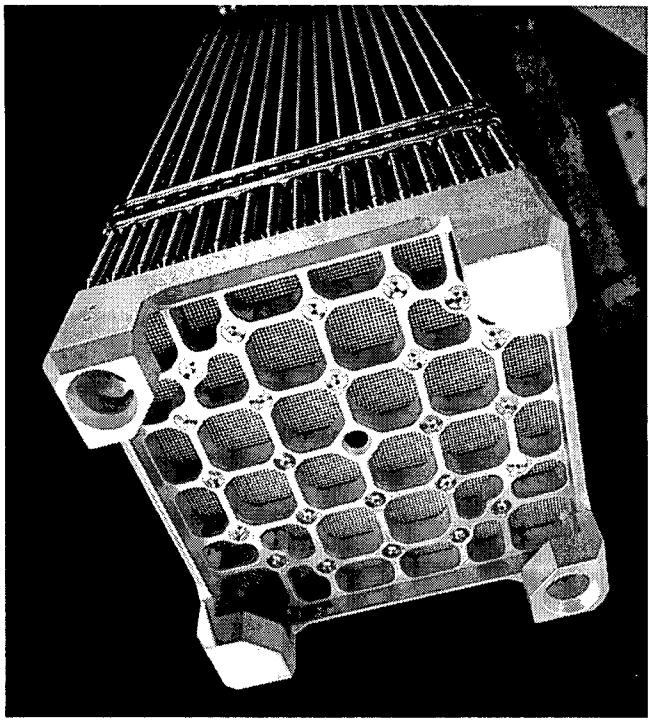

**Figure 3.15 Debris Filter Bottom Nozzle - Installed**

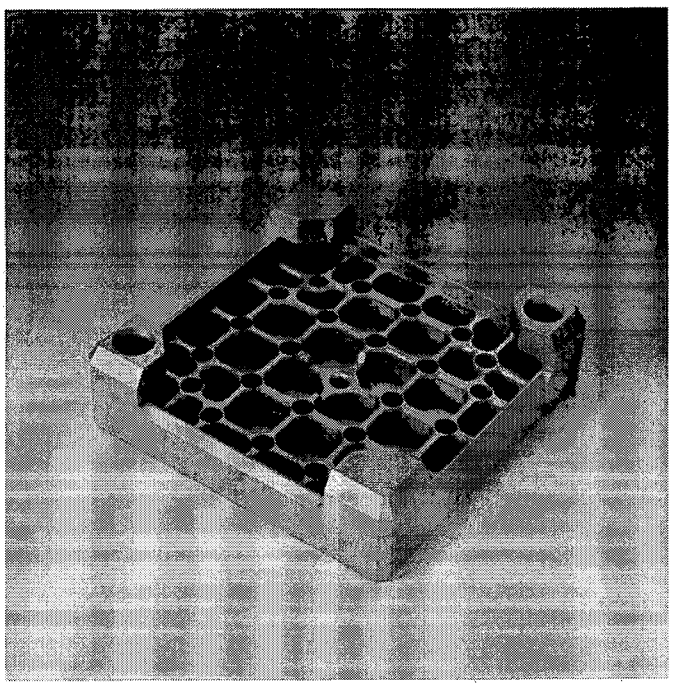

**Figure 3.16 Debris Filter Bottom Nozzle Structure**

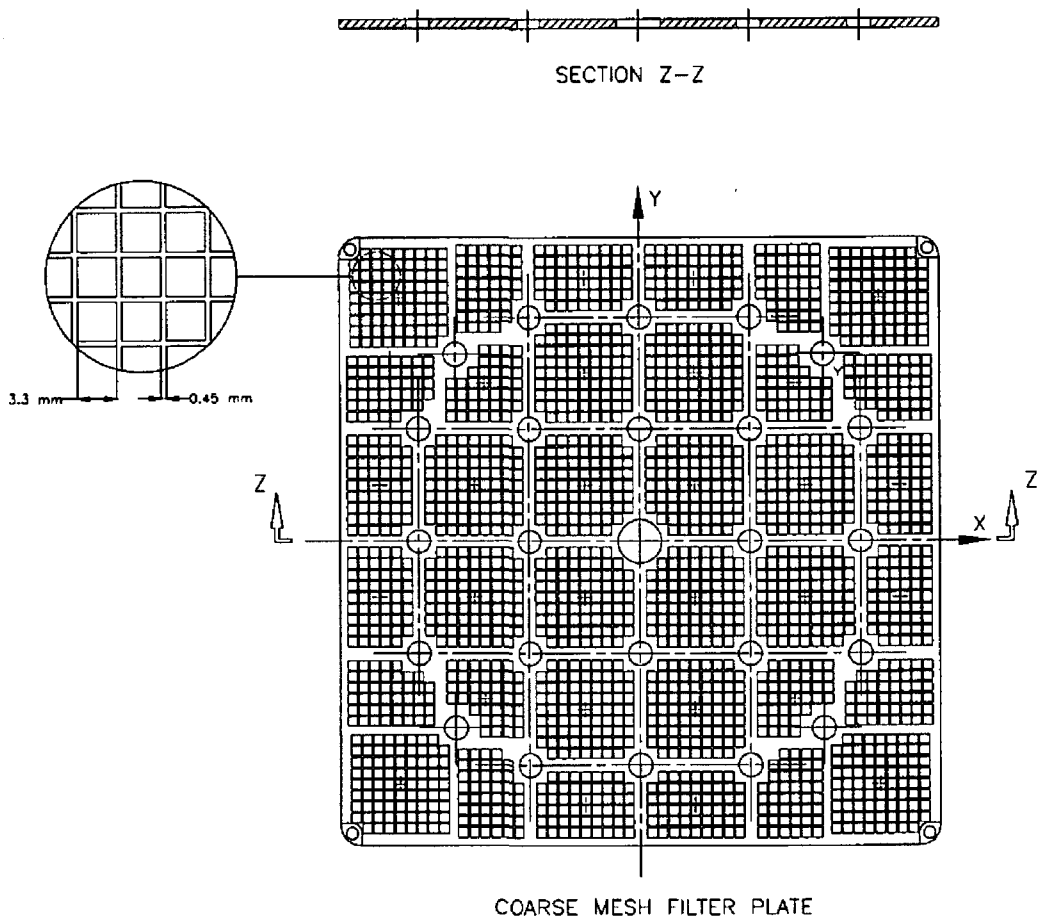


**Figure 3.17 Coarse Mesh Filter Plate Ligament Geometry**

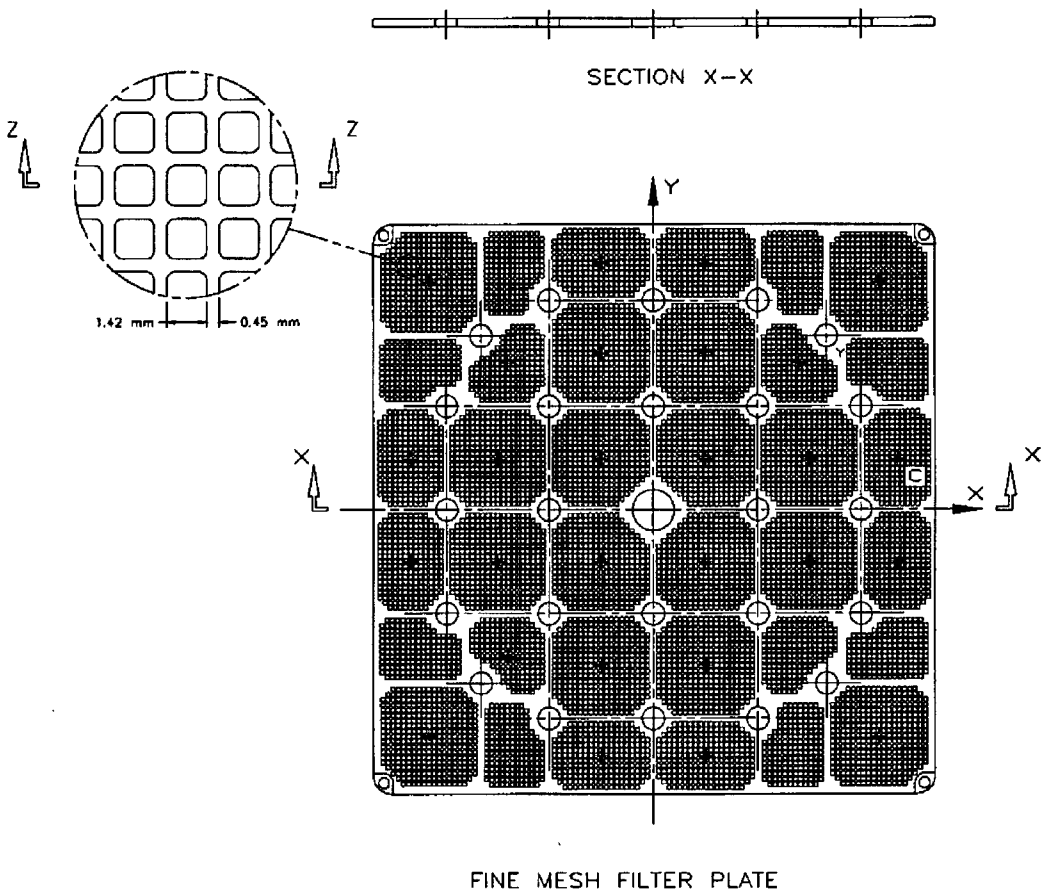


**Figure 3.18 Fine-Mesh Filter Plate Ligament Geometry**

## 4.0 LTA Program

The Advanced Mark-BW program was a cooperative effort with Dominion Generation to thoroughly test the design prior to batch implementation. Four "Mark-BW/X1" LTAs were inserted in the core of Dominion Generation's North Anna Unit 1 in 1997. The LTAs successfully completed three (3) cycles of operation with leaker-free performance with a peak pin burnup of ~57 GWd/MTU. One of the LTAs is tentatively slated for continued irradiation in North Anna Unit 2 beginning in 2002. Plans are being developed to place the LTA in the center position for a fourth cycle and to operate to ~73 GWd/MTU, peak pin burnup.

Table 4.1 summarizes the LTA core operation history for three (3) irradiation cycles. Figure 4.1 provides the core locations and corresponding maximum fuel rod burnup for the LTAs for each irradiation cycle. The LTAs were operated for two cycles in near-peak power core conditions and for the third cycle on the core periphery. The core periphery is known to create a hostile hydraulic environment. In-mast sipping during the fuel off-load confirmed that all LTAs were leaker-free following the third irradiation cycle. RCCA trip data were obtained prior to the second irradiation cycle in which the LTAs operated in RCCA locations. RCCA trip times to dashpot entry ranged from 1.66 to 1.70 seconds, which were well below the Technical Specification limit of 2.2 seconds. In addition, no LTA handling or operational problems occurred.

The Mark-BW/X1 LTAs used M5 alloy as the material for fuel rod cladding and guide thimbles, with the exception of 2 assemblies that had 16 peripheral rods fabricated with the M4 alloy. The Advanced M4 and M5 cladding provide significant improvements in oxidation, hydrogen pickup and absorption, axial growth, and creep compared to the low-tin Zircaloy-4. The Mark-BW/X1 LTAs used fully recrystallized annealed (RXA) Zircaloy-4 intermediate and MSMGs since M5 strip material was unavailable at the outset of the LTA program. Two of the four LTAs had floating upper end grid connections in lieu of the standard fixed upper end grid.

A post-irradiation examination (PIE) was performed at the end of each cycle to evaluate the LTA performance compared to the Framatome ANP fuel performance and M5 database. The following list summarizes the scope of inspections that were performed in the spent fuel pool at the end of fuel Cycles 13, 14, and 15. Inspections included:

- Visual
- Fuel assembly length
- Shoulder gap
- RCCA drag force
- Fuel assembly bow
- Spacer grid position
- Spacer grid width
- Holddown spring height
- Fuel rod oxide
- Guide tube oxide
- QD torque

Based on the PIE measurements, the in-core operation of the LTAs was as expected.

**Table 4.1 Mark-BW/X1 LTA Core Operation History**

| North Anna 1 Core Cycle | LTA Fuel Cycle | Start Date M/D/Year | End Date M/D/Year | Cycle Length EFPD | LTA Fuel Pin Peak Burnup (MWd/MTU) | LTA Fuel Assembly Burnup (MWd/MTU) |
|---|---|---|---|---|---|---|
| 13 | 1 | 6/10/1997 | 9/13/1998 | 452.0 | 24115 | 22424 |
| 14 | 2 | 10/7/1998 | 3/12/2000 | 508.6 | 48096 | 46389 |
| 15 | 3 | 4/7/2000 | 9/9/2001 | 510[a] | 56644[a] | 52650[a] |

[a] End-of-cycle 3 cycle length and burnup values are estimated values

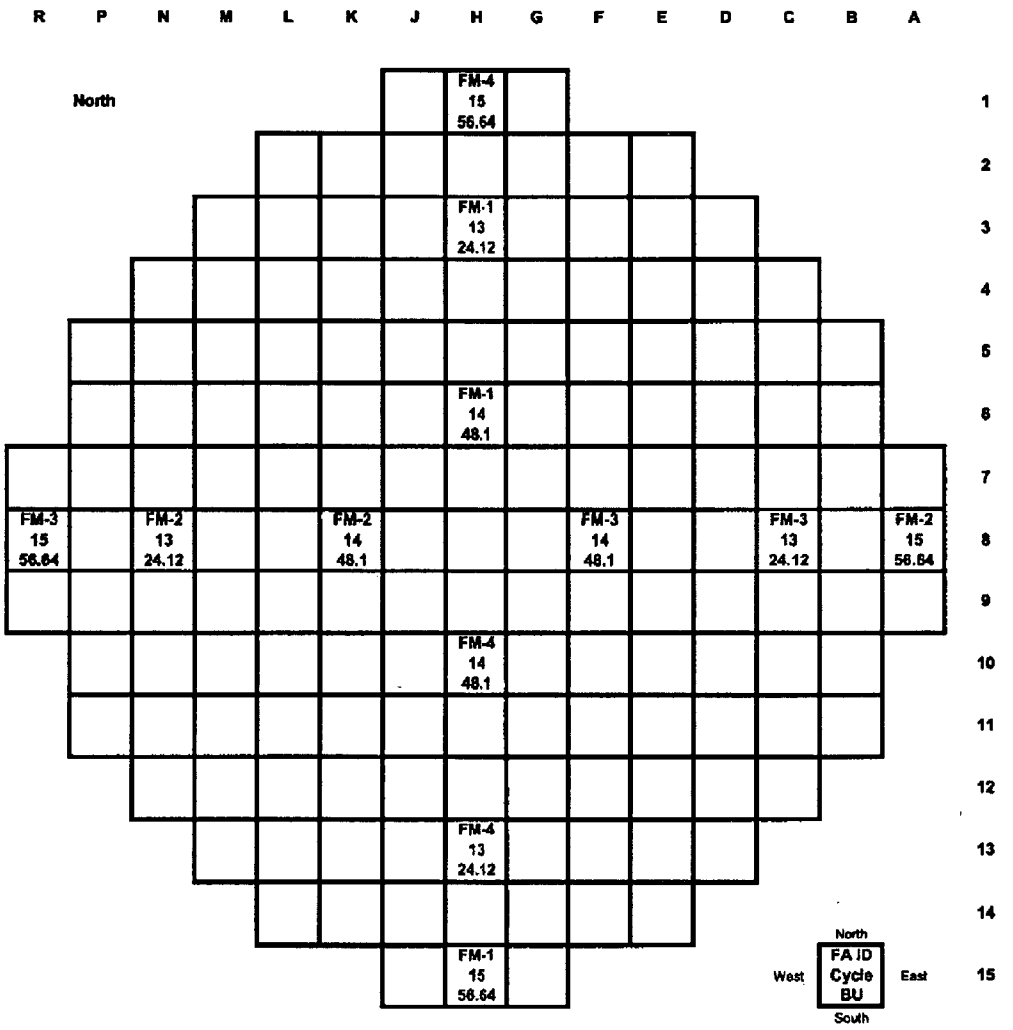


**Figure 4.1 Mark-BW/X1 LTA Core Positions**

## 5.0 Design Evaluation

This section presents an example design evaluation to ensure the Advanced Mark-BW fuel assembly design meets all applicable criteria to maintain safe plant operation. The mechanical analysis demonstrates that the fuel assembly satisfies the requirements outlined in Section 4.2 of the SRP, NUREG-0800 (Reference 1).

Methodologies and models specific to the M5 application are provided in Reference 3. Methodologies for the fuel assembly faulted structural evaluations are described in References 8 and 9. Design bases follow those established for the standard Mark-BW fuel assembly in Reference 2. These topical reports have received NRC approval for referencing in licensing applications.

The design of the Advanced Mark-BW fuel assembly is such that it preserves the interface with resident fuel assemblies and all reactor internals and all equipment for normal handling. The Advanced Mark-BW is designed to preserve the original plant licensing bases for all reactor internal components.

The results of the analyses are applicable to fuel assembly operation in typical three- and four-loop Westinghouse-designed 17x17 fuel plants. The analyses were performed for a peak fuel rod burnup of 65,000 MWd/MTU. Plant-specific analyses will be performed for comparison to the same criteria defined in this topical report to confirm the acceptable performance for the Advanced Mark-BW fuel assembly for specific plants.

### 5.1 *Fuel System Damage Criteria*

#### 5.1.1 Stress

Design Criterion:

> Stress intensities for Advanced Mark-BW fuel assembly components shall be less than the stress limits based on American Society of Mechanical Engineers (ASME) Code, Section III criteria.

Stress intensities were shown to be less than the stress limits based on ASME Code Section III criteria. Flow conditions ranging from the fourth pump startup at 85°F to pump overspeed at power conditions were considered. Beginning-of-life (BOL) and end-of-life (EOL) conditions

were also evaluated to consider the change in load paths and loads due to material relaxation. Table 5.1 provides a summary of the reactor coolant system design transients evaluated. The following fuel assembly components were evaluated:

- Guide thimble assembly
- Top and bottom nozzles
- Grids/Grid restraint
- QD
- Holddown spring assembly
- Instrument sheath
- Fuel rod cladding

Positive margins were determined for all fuel assembly structural components, showing that the Advanced Mark-BW fuel assembly is structurally adequate for normal operating conditions.

#### 5.1.1.1 Guide Thimble Buckling

Design Criterion:

> Buckling of the guide thimbles shall not occur during normal operation (Condition I) or any other transient where control rod insertion is required. In addition, the primary and primary + secondary stresses shall be lower than the material allowable stresses (Reference 2).

The Advanced Mark-BW guide thimbles were shown not to buckle. Allowable guide thimble axial loads were determined per Reference 2, which limits the guide thimble span axial load based on mid-span deflection criteria (such as not to affect control rod insertion or trip performance). Guide thimble corrosion, tolerances, and temperature effects were considered. Positive margins to buckling were determined for all temperature and fuel assembly conditions.

Guide thimble buckling was analyzed for normal operating conditions, including mechanical design flow rate, pump over speed, and RCCA scram loading conditions.

Margins were calculated for the following load cases:

- 100% Full-power mechanical design flow rate
- 120% Full-power mechanical design flow rate (pump overspeed condition)
- 100% Full-power mechanical design flow rate with an upper bound scram load

For the first two cases, the margins were based on the load required to produce a mid-span deflection of [ ] inch using the secant formula. The mid-span lateral deflection of [ ] inch ensures no effect on the control rod insertion or trip performance. The margins for the scram load case were determined based on the maximum-allowable compressive yield stress of the guide thimble.

All margins were found to be acceptable.

5.1.1.2 Top and Bottom Nozzles

Design Criterion:

> The top and bottom nozzle design criterion is the same as that given in Reference 2, which is based on the ASME Boiler and Pressure Vessel (B&PV) Code, Section III limits and meets the requirements of Section 4.2 of the SRP (Reference 1).

Maximum holddown loads were applied in the analyses that correspond to the EOL shutdown condition at 85°F. Material properties used were based on the conservative operating condition temperature of 650°F. A conservative scram load was applied to the top nozzle, in addition to the holddown force. The weight of the fuel assembly was also included in the bottom nozzle analysis. The analyses of the nozzles, including the bottom nozzle filter plate, demonstrated positive margins for all normal operating loads.

5.1.1.3 Connections

Design Criterion:

> The design criterion of the fuel assembly connections is the same as that given in Reference 2, which is based on the ASME B&PV Code, Section III limits and meets the requirements of Section 4.2 of the SRP (Reference 1).

The evaluation showed that sufficient margin exists for all connections for normal operation and handling. The ferrule-to-guide thimble interface was tested to determine the stiffness and strength of the interface. Testing of the connection indicates that the dimple will provide adequate strength under all conditions. In addition, the ferrule dimpling process utilized in attaching the ferrules to the guide thimbles is a qualified procedure.

The guide thimble upper connections (such as the QD sleeve swage and the QD sleeve-to-end grid sleeve interface) and the guide thimble lower connections (such as the end grid sleeve-to-plug crimp and the guide thimble bolt) were verified through testing and/or analysis. Process qualifications are also performed for the weld, swage, and crimp-type connections to ensure repeatability.

#### 5.1.1.4 Spacer Grids

Design Criterion:

> No grid crushing deformations occur for normal operation and Operational Base Earthquake (OBE) conditions. The grids shall also provide adequate support to maintain the fuel rods in a coolable configuration for all conditions (References 2 and 9).

The top and bottom Inconel end grids (EGs) are the same grids used for the standard Mark-BW fuel. The Advanced Mark-BW intermediate and mid-span mixing spacer grids (SGs) are made from M5. The mechanical design bases of the Advanced Mark-BW spacer grids were confirmed through a series of tests on Zircaloy-4 grids. These test results are applicable to the M5 grids, given the similarity in elastic modulus, strength, and ductility of the two materials. The Zircaloy-4 properties of the intermediate and mid-span mixing spacer grids were used in the structural analysis and are considered applicable and bounding. All testing (summarized below) indicates that the grids provide adequate design margins.

- **Dynamic Impact** (SG, MSMG) - The dynamic characteristics (impact force, impact duration, pre- and post-impact velocity, grid permanent deformation, dynamic stiffness, damping) were used as input properties for the analytical models of the fuel assembly, to establish allowable impact loads, and to characterize the plastic deformation of the grids. The impact test was also used to determine the value of grid deformation at which localized distortion of the guide thimble array affected insertion of a control rod cluster.
- **Static Crush** (SG, MSMG) - The static characteristics (static stiffness, elastic load limit) were used to establish allowable grid clamping loads during shipping.
- **Slip Load** (SG, EG) - The forces required to slip the grid relative to the fuel rods, guide thimbles, and instrument tube were measured for BOL and EOL (EG only) conditions. The EOL Inconel end grid fuel rod cells were intentionally oversized to reduce the interference with the fuel to simulate EOL conditions. Actual field data of EOL intermediate spacer grid slip loads were used. These data, which represent the friction force between the grids and fuel rods, were used as input in analytical models of the fuel assembly.

- **Handling** (SG, EG) - A full-scale Mark-BW prototype with six (6) Zircaloy-4 SG and two (2) Inconel EG was used to determine the insertion and withdrawal loads of the assembly. The prototype was fully inserted and withdrawn next to three (3) adjacent simulated fuel assemblies. The insertion/withdrawal force data were used to confirm the acceptable fuel handling characteristics of the Zircaloy-4 SG and Inconel EG. These results remain valid for the Mark-BW with MSMGs since the MSMGs have a reduced envelope to resist interface with adjacent assemblies. The fuel assembly handling performance was further verified by the Mark-BW/X1 LTA experience.
- **Corner Hang-up** (SG) - The grid corners have been designed (through the use of lead-in surfaces) to minimize the potential for grid hang-up. In addition, tests were conducted on the Zircaloy-4 intermediate spacer grid to determine the elastic load limit and failure mode of the corner cell (simulating grid hang-up). The elastic load limit was found to be [ ], with a minimum value of [ ]. More significantly, it was concluded that the failure mode of the corner was through weld fracture with very little outer strip and corner deformation. Given the similarities in material properties, the Zircaloy-4 test results are considered applicable for the M5 grids.

5.1.1.5 Cladding Stress

Design Criterion:

Fuel rod cladding stress shall not exceed stress limits established in Reference 3 and are provided below:

- Pm < 1.5 Sm in compression and < Sm in tension
- Pm + Pb < 1.5 Sm
- Pm + Pb + Pl < 1.5 Sm
- Pm + Pb + Pl + Q < 3.0 Sm

The types of stresses analyzed are as follows:

- **Pressure Stresses** - These are membrane stresses due to the external and internal pressure on the fuel rod cladding.
- **Flow Induced Vibration (FIV)** - These are longitudinal bending stresses due to vibration of the fuel rod. The vibration is caused by coolant flow around the fuel rod.
- **Ovality** - These are bending stresses due to external and internal pressure on the fuel rod cladding that is oval. This does not include the stresses resulting from creep ovalization into an axial gap.
- **Thermal Stresses** - These are secondary stresses that arise from the temperature gradient across the fuel rod during reactor operation.
- **Fuel Rod Growth Stresses** - These secondary stresses are due to the fuel rod slipping through the spacer grids. These may be due to the fuel assembly expanding more than the fuel rod due to heat-up, or they may be due to fuel rod growth from irradiation.

- **Three-point Grid Stop Stresses** - These are bending stresses due to the grid stop loads against the fuel rod cladding.
- **Fuel Rod Spacer Grid Interaction** - These are localized stresses due to contact between the fuel rod cladding and the spacer grid stops.

Classifications of stresses:

| Loading Condition | Stress Category | |
|---|---|---|
| Pressure Stresses | Pm | Primary membrane |
| Ovality Stresses | Pb | Primary membrane bending |
| Spacer Grid Interaction | Pl | Primary membrane local |
| FIV | Pb | Primary membrane bending |
| Radial Thermal Expansion | Q | Secondary |
| Differential Rod Growth | Q | Secondary |

The fuel rod cladding was analyzed for the stresses induced during operation using the approved methodology of Reference 3. Conservative values are used for cladding thickness, oxide layer buildup, external pressure, internal fuel rod pressure, differential temperature, and unirradiated cladding yield strength. The fuel rod stress analysis calculates the worst-case cladding stress state based on the thinnest clad wall and largest cladding ovality. The likelihood of the three conditions occurring at the same location on the cladding is remote. Therefore, the use of the two conditions together to calculate the cladding stress state is conservative. The analyses of the fuel rod clad stresses demonstrated positive margins for all operating conditions.

Advanced Mark-BW Fuel Rod Stress Result Summary – Example Case

| Category | Limits | Stress Allowable (psi) | % Margin | |
|---|---|---|---|---|
| | | | Compressive | Tensile |
| Primary Membrane (Compressive) | 1.5 Sm | [ ] | [ ] | [ ] |
| Primary Membrane (Tensile) | Sm | [ ] | [--] | [ ] |
| Primary Membrane + Bending | 1.5 Sm | [ ] | [ ] | [ ] |
| Primary Membrane + Bending + Local | 1.5 Sm | [ ] | [ ] | [ ] |
| Primary Membrane + Bending + Local + Secondary | 3.0 Sm | [ ] | [ ] | [ ] |

**NOTE:** The minimum unirradiated hoop yield strength of the cladding at 650°F used is [ ].

### 5.1.2 Cladding Strain

Design Criterion:

> The Advanced Mark-BW fuel rod transient strain limit is 1% for Conditions I and II events per Reference 3.

The Advanced Mark-BW fuel rod was analyzed to determine the maximum transient the fuel rod cladding could experience before exceeding the transient strain limit of 1%. The transient strain limit analysis uses cladding circumferential changes before and after a linear heat rate (LHR) transient to determine the strain. The analysis was conducted using the NRC-approved TACO3 fuel rod thermal analysis code per Reference 10. The formula for determining the transient strain is:

$$\varepsilon_{transient} = \frac{(\text{Pellet O.D.})_{transient} - (\text{Pellet O.D.})_o}{(\text{Pellet O.D.})_o} \times 100\% \leq 1.00\%$$

The calculated LHRs for transients that induce 1% cladding strain are not limiting to the plant's operation and are much greater than the maximum transient the fuel rod is expected to experience.

### 5.1.3 Cladding Fatigue

Design Criterion:

The maximum fuel rod fatigue usage factor is 0.9.

The fuel rod was analyzed for the total fatigue usage factor using the approved methodology of Reference 3 and the procedures outlined in the ASME Code. Testing has been conducted by Framatome ANP in France to determine the fatigue performance of M5 cladding. These tests have shown similar fatigue endurance performance for RXA claddings as compared to Zircaloy-4, with the lower yield strength of the RXA claddings limiting the applied stresses. The values for $\varepsilon$ E vs. N cycles (Salt vs. N) obtained are well enveloped by the standard O'Donnell-Langer design fatigue curve for irradiated zircaloy. A fuel rod life of 8 years and a vessel life of 40 years are assumed. The fuel rod cladding will, therefore, experience 20% of the number of transients the reactor pressure vessel will experience. All possible Conditions I and II events expected and one Condition III event were analyzed to determine the total fatigue usage factor experienced by the fuel rod cladding. Conservative inputs in terms of cladding thickness, oxide layer buildup, external pressure, internal fuel rod pressure, and differential temperature across the cladding were assumed.

The results of the example fatigue analysis for the Advanced Mark-BW fuel rod show a maximum fatigue usage factor of [ ], which is well within the limit of 0.9.

### 5.1.4 Fretting

Design Criterion:

Span average cross-flow velocities shall be less than 2 ft/sec.

Mixed-core analyses with a single Advanced Mark-BW and the remaining core with resident fuel demonstrated span average cross-flows less than the 2 ft/sec (span average) criterion, documented in Reference 2. Resident fuel included those with and without MSMGs. The criterion is used to preclude unacceptable FIV of the fuel rods. Span average values are used to consider the integrated effects over the total span. FIV models benchmarked to flow test results demonstrated that the fuel rod and fuel assembly vibration amplitudes are small [( )] for a maximum bundle design span average cross-flow velocity of 2 ft/sec.

Design Criterion:

> The fuel assembly design shall be shown to provide sufficient support to limit fuel rod vibration and clad fretting wear.

The Advanced Mark-BW fuel rod fretting wear performance is based on the proven performance of the standard Mark-BW, the successful three-cycle operation of the LTAs in North Unit 1; out-of-core life and wear and FIV testing; and analytical benchmarks and evaluations.

The standard Mark-BW fuel utilizing Zircaloy-4 fuel rods has exhibited excellent performance with only five failures in over [ ] rods since 1993 and [ ] fuel rod failure since 1998. None of these rod failures was attributed to fretting. The Advanced Mark-BW and standard Mark-BW use many of the same component designs, including the end grid, intermediate grid, grid restraint, top and bottom nozzles, and guide thimbles. Note that Mark-BW fuel assemblies, utilizing M5 fuel rods and guide thimbles, are in the first cycle of operation at Sequoyah Unit 2. Outside the United States, Framatome has also [ ] fuel assemblies with M5 fuel rod and guide thimbles in operation, [ ] of which have M5 grids. These assemblies include the Alliance™* and AFA-3G 17x17 fuel types. In addition, [ ] fuel assemblies with [ ] M5 fuel rods have operated in [ ] reactors, including designs ranging from the 14x14 to the 18x18 fuel types. No fuel rod failures have occurred with the M5 fuel.

As discussed in Section 4.0, four Mark-BW/X1 LTAs were inserted in the core of Dominion Generation's North Anna Unit 1 in 1997. The LTAs successfully completed three cycles of operation with leaker-free performance with a peak pin burnup of ~57 GWd/MTU. The LTAs operated for two cycles in near-peak core conditions and for the third cycle on the core periphery with no failures. The core periphery is known to create a hostile hydraulic environment. Note that the Mark-BW/X1 LTAs used RXA Zircaloy-4 intermediate- and MSMGs.

Extensive out-of-core testing, including life and wear and FIV testing, was conducted. The life and wear test included a 1000-hour endurance test in an environment representative of in-reactor conditions. Life and wear testing showed low fuel rod wear [ ] that was comparable to other proven fuel designs, including the standard Mark-BW. Note that the

---

* Alliance is a trademark of Framatome, ANP.

prototypes tested were fabricated with Zircaloy-4 grids. [

].

The FIV testing served to characterize the flow-induced behavior of the Advanced Mark-BW (MSMG) fuel assembly adjacent to a Mark-BW (non-MSMG) fuel assembly for flow rates encompassing and exceeding reactor startup to normal operating conditions. The testing showed no deleterious cross-flow or axial-flow effects due to the MSMGs. Vibration amplitudes for the fuel assemblies were low, which measured [ ] microns RMS [ ] over a 1 to 50 Hz frequency range. No abnormal flow rate dependencies were observed for the fuel assembly vibration amplitudes.

Therefore, the Advanced Mark-BW fuel rod fretting wear performance was determined to be acceptable based on relevant in-core experience, extensive out-of-core testing, and detailed analysis.

### 5.1.5 Oxidation, Hydriding, and Crud Buildup

Design Criterion:

> The fuel rod cladding best-estimate corrosion shall not exceed 100 microns, per Reference 11. Hydrogen pickup is controlled by the corrosion limit.

Corrosion data of M5 fuel rod cladding are provided in Reference 3. The data confirm that M5 fuel rod cladding exhibits a strong resistance to corrosion. From previous irradiation experience with this cladding type, the corrosion has been found to be less than one half the corrosion of low-tin zircaloy claddings. For the present application, a corrosion prediction based on the present database of M5 corrosion measurements for typically enveloping fuel cycles shows that the maximum predicted cladding corrosion for the M5 claddings will be [ ] μm versus a limit of 100 μm. The hydrogen pick-up rate of the M5 cladding has been found to be approximately [ ].

At this corrosion level, the maximum hydrogen content of the M5 cladding at 65 GWd/MTU is approximately [ ] ppm. The upper limit for hydrogen pick-up is [ ] ppm. This level of

corrosion and associated hydriding will not adversely affect the structural integrity of the fuel rod during its design lifetime.

### 5.1.6 Fuel Rod Bow

Fuel rod bowing is evaluated with respect to the mechanical and thermal-hydraulic performance of the fuel assembly. There is no specific design criterion for fuel rod bow.

PIEs of the Advanced Mark-BW/X1 LTAs are planned in early 2002 to confirm the fuel rod bow characteristics of the assembly. Advanced Mark-BW fuel rod bow, however, is not expected to differ significantly from that of the standard Mark-BW fuel.

As discussed in Reference 2, the Mark-BW Zircaloy-4 fuel design has features that make its fuel rod bow performance similar to that of other Framatome ANP fuel designs. In Reference 4, Framatome ANP presented new data that extended the rod bow database for Framatome ANP fuel (zircaloy) to [ ] GWd/MTU. The topical report concluded that the rod bow correlations from Reference 12 are applicable at extended burnups and apply to the Mark-BW.

The low growth characteristics of the M5 advanced material that is used on the Advanced Mark-BW will provide bow behavior no more severe than the zircaloy clad fuel in the Mark-BW cage. The low growth of M5 has been demonstrated through the irradiation experience of the Mark-BW/X1 LTAs, in addition to special clad assemblies in the McGuire plant and other Framatome ANP fuel in Europe. Thus, the Advanced Mark-BW will have no greater penalty for rod bow than is assessed against the Mark-BW Zircaloy-4 design.

### 5.1.7 Axial Growth

Design Criterion:

> The fuel assembly-to-reactor internals gap allowance shall be designed to provide positive clearance during the assembly lifetime (Reference 2).

The axial gap between the top nozzle and reactor upper core plate was conservatively analyzed to show that sufficient margin exists to accommodate the fuel assembly growth for the design burnup. The peak rod burnup for the Advanced Mark-BW design is 62,000 MWd/MTU. The analysis was conducted using the latest irradiation growth models for Alloy M5 guide thimbles

and fuel rods based on PIE data for the Framatome ANP fuel designs. These growth models were approved in Reference 3.

The minimum fuel assembly/reactor core plate gap at EOL for a 60,000 MWd/MTU maximum assembly burnup was determined to be [ ] inch at worst-case (cold) conditions. A conservative maximum fuel assembly growth prediction was used given the low fuel assembly growth.

Design Criterion:

> The fuel assembly top nozzle-to-fuel rod gap allowance shall be designed to provide positive clearance during the assembly lifetime.

The axial gaps between the top nozzle adapter plate and fuel rods were conservatively analyzed to show that sufficient margin exists to accommodate the fuel assembly and fuel rod growth for the design burnup. The peak rod burnup for the Advanced Mark-BW design is 62,000 MWd/MTU. The analysis was conducted using the NRC-approved irradiation growth models for Alloy M5 guide thimbles and fuel rods based on PIE data for the Framatome ANP fuel designs.

The minimum fuel rod shoulder gap at EOL for the analyzed peak fuel rod burnup of 65,000 MWd/MTU was calculated to be [ ] inch at worst-case (hot) conditions using highly conservative methods. For the fuel rod growth evaluations, worst case was considered to be maximum fuel rod growth and minimum (no) guide thimble growth. Differential thermal expansion was also considered at operating temperatures.

### 5.1.8 Fuel Rod Internal Pressure

Design Criterion:

> Fuel rod internal pressure limits are established in Reference 13. The design basis is that the fuel system will not be damaged due to excessive internal pressure. Fuel rod internal pressure is limited to that which would cause 1) the diametral gap to increase due to outward creep during steady-state operation and 2) extensive DNB propagation to occur.

The Advanced Mark-BW fuel rod internal gas pressure was determined using the TACO3 computer code per Reference 10 and the methodology defined in Reference 13.

The results indicated the fuel rod can attain the design maximum burnup of 62 GWd/MTU. Inputs to the analysis included a power history that was assumed to envelop the operation of any individual fuel rod and worst-case manufacturing variations allowed by the fuel rod specifications. On a cycle-specific basis, should peak pin powers violate the envelope resulting in predicted pressure greater than the licensed limit, acceptable pin pressure results can be demonstrated by utilizing fuel rod-specific power histories and fuel assembly as-built manufacturing data. In addition, other NRC-approved fuel performance codes, such as COPERNIC (per Reference 14) may be utilized in the future for the Advanced Mark-BW fuel rod evaluation.

### 5.1.9 Assembly Liftoff

Design Criteria:

> The Advanced Mark-BW fuel holddown springs must be capable of maintaining fuel assembly contact with the lower support plate during normal operating, Conditions I and II events, except for the pump overspeed transient. The fuel assembly shall not compress the holddown spring to solid height for any Conditions I and II event. The fuel assembly top and bottom nozzles shall maintain engagement with reactor internals for all Conditions I through IV events (Reference 2).

The Advanced Mark-BW holddown springs were analyzed to show that the holddown springs can accommodate irradiation growth of the fuel assembly and the differential thermal expansion between the fuel assembly and the core internals. The fuel assembly lift evaluation was performed by comparing the holddown force provided by the leaf springs with that of the hydraulic forces at both normal operating conditions and pump overspeed condition. The hydraulic forces were determined using the NRC approved LYNXT code per Reference 15, which established the pressure drop characteristics of the Advanced Mark-BW fuel assembly for full core and mixed core implementation with resident fuel.

The analysis showed that the Advanced Mark-BW fuel assembly will not lift off under any normal operating condition. The minimum margin-to-fuel assembly liftoff occurs at EOL, 85°F. At the pump overspeed condition, the fuel assembly will experience some liftoff. The liftoff will

be minimal, and the holddown spring deflection will be less than the worst-case normal operating cold-shutdown condition. The holddown spring does not go solid for any operating condition. These margins are calculated assuming the full Advanced Mark-BW core, which bounds the mixed core configurations with resident fuel without MSMGs. In addition, the fuel assembly top and bottom nozzles were shown to maintain engagement with reactor internals for all operating conditions.

## 5.2 *Fuel Rod Failure Criteria*

### 5.2.1 Internal Hydriding

Design Criterion:

> Internal hydriding shall be precluded by appropriate manufacturing controls.

The absorption of hydrogen by the cladding can result in cladding failure due to reduced ductility and the formation of hydride platelets. This failure mechanism is precluded in all Framatome ANP fuel rods by tight controls in the moisture hydrogen impurities in the rod during fabrication. Cleaning and drying of the cladding, and careful moisture control of the fuel pellets are used to minimize the total hydrogen within the fuel rod assemblies. The Framatome fabrication limit for total hydrogen in the fuel pellets is [ ] ppm.

### 5.2.2 Cladding Collapse

Design Criterion:

> The acceptance criterion is that the predicted creep collapse life of the fuel rod must exceed the maximum expected in-core life.

The Advanced Mark-BW fuel rod was analyzed for creep collapse using NRC-approved methods outlined in Reference 16. The following conservatisms were used in determining creep collapse life of the fuel rod:

[

]

Fuel rod creep collapse is determined when either of the following happens:

- The rate of creep ovalization exceeds 0.1 mils/hr.
- The maximum fiber stress exceeds the unirradiated yield strength of the cladding.

RXA claddings such as M5 have a greater resistance to creep than the stress-relieved Zircaloy-4 cladding. The creep rate of M5 is approximately [ ] of the creep rate of Zircaloy-4. A factor of [ ] is used on the creep model contained in CROV to model the M5 claddings.

Using the methodology described above, the fuel rod creep collapse lifetime was shown to be greater than the design burn-up of 62 GWd/MTU.

### 5.2.3 Overheating of Cladding

Design Criterion:

> For a 95% probability at a 95% confidence level, DNB will not occur on a fuel rod during normal operation and anticipated operational occurrence (AOOs).

The requirements related to overheating and cladding are addressed in plant-specific transient analyses. NRC-approved methods are used to perform the transient analyses.

**DNB Correlation**

The family of BWU critical heat flux (CHF) correlations is utilized for the DNB analysis of the Advanced Mark-BW fuel assembly. The BWU family of CHF correlations consists of three correlations that use the same basic equation form but are fit to different databases: BWU-N is applicable to non-mixing vane grids, BWU-I is the basic mixing vane correlation, and BWU-Z is the enhanced mixing vane correlation approved for the Advanced Mark-BW fuel assembly design. The BWU-N and BWU-Z CHF correlations are used as the licensing basis for the Advanced Mark-BW fuel assembly.

**BWU-N CHF Correlation**

The applicable CHF correlation for DNB analysis of the Advanced Mark-BW fuel assembly in the non-mixing region of the fuel assembly is the BWU-N CHF correlation documented in Reference 5. The non-mixing region of the fuel assembly extends from the beginning of the heated length to the leading edge of the first mixing vane grid.

**BWU-Z CHF Correlation**

The applicable CHF correlation for analysis of the Advanced Mark-BW fuel assembly in the mixing region, but below the MSMGs, is BWU-Z. The BWU-Z correlation is also used above the MSMGs, with an enhancement factor. The database for the BWU-Z correlation extends its range of application with improved margin in the annular (middle) and low-flow regimes at low pressure, mass velocity, and high quality compared to the previous NRC-approved CHF correlation BWCMV-A (Reference 6) used for the Mark-BW. Similar to the BWCMV-A correlation, BWU-Z uses a design-specific equivalent grid-spacing factor.

Higher CHF performance, beyond the Advanced Mark-BW mixing vane grid, is obtained by the addition of the three MSMGs. This additional performance, demonstrated at [ ]% in CHF, is incorporated into the BWU-Z CHF correlation by means of a direct CHF multiplication factor. An addendum to the BWU-Z CHF topical report (Reference 7) has been submitted to the NRC for application of the enhanced CHF performance of the MSMGs using the [ ]% enhancement factor applied to the BWU-Z CHF correlation. When using the BWU-Z correlation in this manner, referenced specifically in Reference 7, it is referred to as BWU-ZM.

### 5.2.4 Overheating of Fuel Pellets

Design Criterion:

> For a 95% probability at a 95% confidence level, fuel pellet centerline melting shall not occur for normal operation and AOOs.

The design basis for Advanced Mark-BW fuel rod centerline melt follows that given in Reference 2. Fuel melting is not permitted during normal operating conditions or during AOOs. The TACO3 computer code was used to determine the local LHR throughout the fuel rod lifetime that results in centerline temperature predictions exceeding $T_L$, which is a limit value

chosen such that a 95% probability exists at the 95% confidence level that centerline melting will not occur. The most limiting time in life for the local LHR is at BOL. A typical generic centerline fuel melt limit is [ ] kW/ft for the Advanced Mark-BW fuel rod.

### 5.2.5 Pellet/Cladding Interaction

Per Section 4.2 of the SRP, there are no generally applicable criteria for pellet-clad interaction failure. Clad strain and fuel melt criteria are used to ensure that the fuel rod design is acceptable.

### 5.2.6 Cladding Rupture

The requirements of cladding rupture are addressed in the plant-specific loss-of-coolant accident (LOCA) analyses. NRC-approved methods are used to perform the LOCA analyses.

## 5.3 *Fuel Coolability*

### 5.3.1 Cladding Embrittlement

The requirements on cladding embrittlement are addressed in the plant-specific LOCA analyses. NRC-approved methods are used to perform the LOCA analyses.

### 5.3.2 Violent Expulsion of Fuel

The requirements on violent expulsion of fuel during a reactivity accident are addressed in the plant-specific safety analyses. NRC-approved methods are used to evaluate the event (control rod ejection).

### 5.3.3 Fuel Rod Ballooning

The requirements on fuel rod ballooning are addressed in the plant-specific LOCA analyses. NRC-approved methods are used to perform the LOCA analyses.

### 5.3.4 Fuel Assembly Structural Damage from External Forces

Design Criteria:

- **OBE** - Allow continued safe operation of the fuel assembly following an OBE event by ensuring the fuel assembly components do not violate their dimensional requirements.
- **Safe Shutdown Earthquake (SSE)** - Ensure safe shutdown of the reactor by maintaining the overall structural integrity of the fuel assemblies, control

rod insertibility, and a coolable geometry within the deformation limits consistent with the Emergency Core Cooling System (ECCS) and safety analysis.

- **LOCA or SSE+LOCA** - Ensure safe shutdown of the reactor by maintaining the overall structural integrity of the fuel assemblies and a coolable geometry within deformation limits consistent with the ECCS and safety analysis.

The Advanced Mark-BW faulted evaluation addresses both the horizontal (LOCA and seismic) and vertical (LOCA) effects. The horizontal faulted analysis models and methodology are consistent with that approved by the NRC in Reference 9. The axial faulted analysis methodology is consistent with that approved by the NRC in Reference 8.

The design bases used to establish the acceptance criteria for the Advanced Mark-BW fuel assembly are provided in Reference 2 and are consistent with NUREG-0800, Section 4.2, Appendix A (Reference 1) and follow the guidelines established by Section III of the ASME Code.

#### 5.3.4.1 Horizontal Analysis

The Advanced Mark-BW fuel assembly component stresses were shown to be less than the allowable limits based on ASME Code, Section III criteria or testing.

The horizontal component of the faulted analysis determines the structural integrity of the Advanced Mark-BW fuel assembly in the horizontal direction. The following loading conditions were evaluated:

- OBE
- SSE
- LOCA
- Combined Seismic and LOCA Events

Advanced Mark-BW fuel assembly models were benchmarked using properties established through testing. A representation of resident fuel assembly properties was also used in the analysis for the mixed core evaluation. Fuel assembly models were combined to represent a row of configuration in the core. Row models with 3 to 15 assemblies were created.

Typical seismic SSE displacement time histories at the lower core plate, upper core plate, and upper end of the baffle plate were evaluated. The LOCA lateral displacements evaluated

corresponded to a worst-case attached pipe break based on leak-before-break. The SSE and LOCA time histories were applied to the reactor core model. The fuel assembly response was determined per methodology described in Reference 9. The maximum grid impact forces and grid deformations were obtained for SSE and SSE+LOCA conditions for a full-core Advanced Mark-BW fuel assembly configuration.

A mixed core bounding analysis of both resident and Advanced Mark-BW fuel assemblies was also performed for seismic and LOCA events. The analysis was performed to show the adequacy of the Advanced Mark-BW when next to resident fuel. Three possible mixed-core configurations were selected to account for the potential core locations where the Advanced Mark-BW may be loaded. These core patterns are shown in Figure 5.1, Figure 5.2, and Figure 5.3.

The maximum grid impact forces for each of the load cases occurred at the peripheral fuel assembly locations adjacent to the baffle for all core configurations.

The maximum impact load on the spacer grids under seismic SSE conditions was determined to be [ ] lbs for the example case. The shortest row configuration produced the largest impact load. The maximum impact force for both SSE and LOCA occurred at an intermediate grid location of a peripheral fuel assembly. The loads for seismic and LOCA were combined, resulting in the following grid deformation:

| SSE + LOCA | |
|---|---|
| **Advanced Mark-BW Grids** | |
| Intermediate Spacer Grid | Maximum FA accumulated deformation in a row = [ ] in |
| MSMG | Maximum FA accumulated deformation in a row = [ ] in |
| **Resident Fuel** | |
| Intermediate Spacer Grid | Maximum FA accumulated deformation in a row = [ ] in |

The spacer grid impact loads for the SSE conditions were within the allowable elastic load limits. The fuel assembly accumulated deformations under SSE+LOCA conditions were evaluated for core coolable geometry and found to be acceptable. The core coolable geometry will be maintained for all the faulted loads.

#### 5.3.4.2 Vertical Analysis

The Advanced Mark-BW fuel assembly was evaluated for the vertical LOCA condition per the approved methodology in Reference 8. Fuel assembly axial properties obtained from testing were used to benchmark the fuel assembly axial model.

The example vertical core force time histories that were used corresponded to bounding attached pipe breaks based on leak-before-break methodology. The guide thimble critical buckling is the limiting criterion for the vertical LOCA condition. For conservatism, a load factor of 1.2 was used on the guide thimble load to account for unequal loading due to external factors, fabrication differences, and inherent design factors. The analysis confirmed that the forces on the guide thimble were well below conservatively calculated allowable loads.

#### 5.3.4.3 Combined Horizontal and Vertical Faulted Analysis

The Advanced Mark-BW fuel components were shown to satisfy all design criteria for faulted loading conditions. The Advanced Mark-BW fuel assembly component stress analyses for faulted conditions were performed using axial and lateral loads generated by seismic and LOCA loading analyses. SSE and SSE+LOCA loading were used for the component analyses. The loads for the worst-case LOCA break were conservatively combined with those of the SSE to determine maximum fuel assembly loads. The component stress intensity limits for the components were based on the Level D service limit of the Section III of the ASME Code (Reference 17).

The design margins indicate that all major components of the Advanced Mark-BW fuel assembly meet the design criteria for the SSE and SSE+LOCA loading events.

### 5.4 *Design Evaluation Summary*

The Advanced Mark-BW fuel assembly was shown to meet all fuel assembly design criteria critical to safe and reliable operation. The standard Mark-BW features maintained in the Advanced Mark-BW assembly provide reactor-proven design parameters that provide a basis for successful future performance. Design verification testing and analyses have demonstrated the acceptability of the added design features and ensure that the Advanced Mark-BW fuel assembly will operate safely and reliably. A detailed LTA program has further verified the Advanced Mark-BW irradiation performance.

Acceptable Advanced Mark-BW fuel assembly and fuel rod mechanical and thermal-hydraulic performance capability can be obtained for fuel rod burnups up to 62,000 MWd/MTU.

**Table 5.1 Summary of Reactor Coolant System Design Transients**

| | Event Description | Anticipated Life-Time Occurrences |
|---|---|---|
| **Normal Conditions** | | |
| 1. | Heatup and cooldown at 100°F/hr | 200 (each) |
| 2. | Unit loading and unloading at 5% of full power/min | 18,300 (each) |
| 3. | Step load increase and decrease of 10% of full power | 2,000 (each) |
| 4. | Large step load decrease | 200 |
| 5. | Steady-state fluctuations | Infinite |
| **Upset Conditions** | | |
| 6. | Loss of load, without immediate turbine or reactor trip | 80 |
| 7. | Loss of power (blackout with natural circulation in the reactor coolant system) | 40 |
| 8. | Loss of flow (partial loss of flow, one pump only) | 80 |
| 9. | Reactor trip from full power | 400 |
| 10. | Spray actuation with a differential temperature > 320°F ≤ 560°F | 10 |
| 11. | Operational Basis Earthquake Reactor Vessel | 200 cycles |

In accordance with the ASME Nuclear Power Plant Component Code, faulted conditions are not included in the fatigue evaluation.

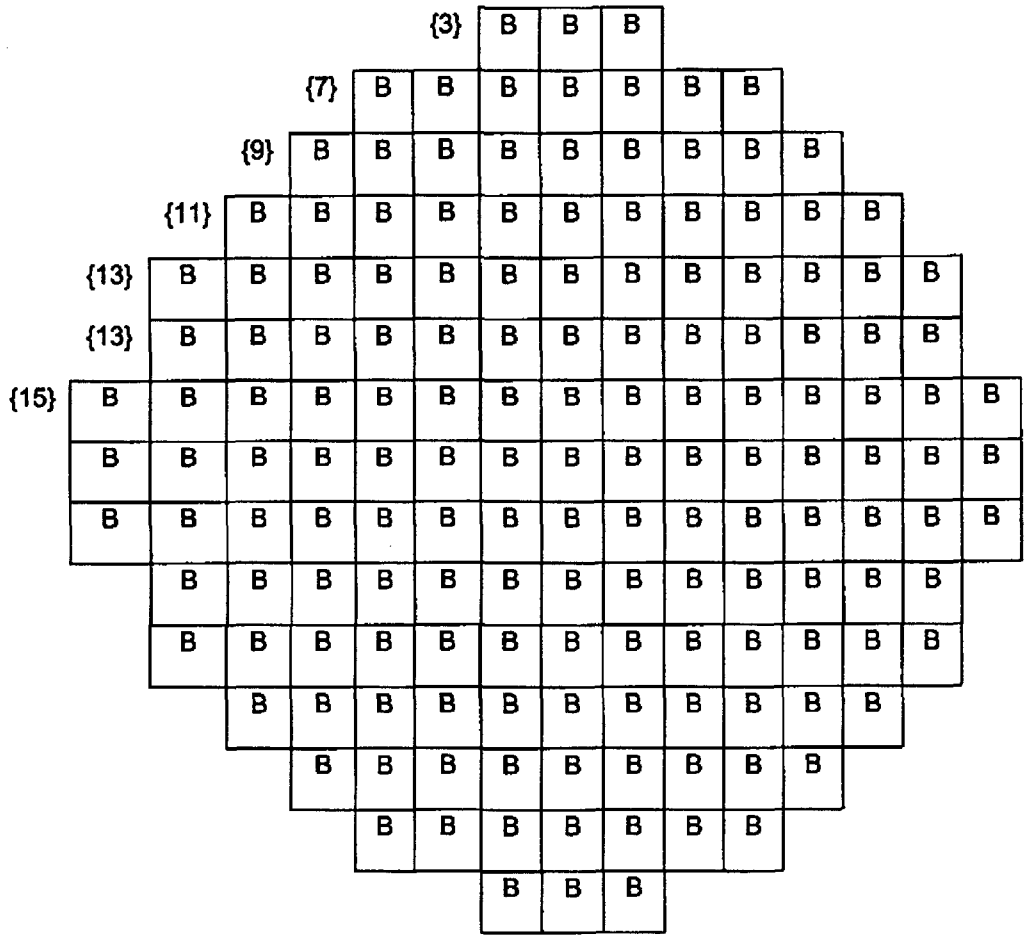


**NOTES**

B Locations of permanent grid deformation from LOCA.

{#} Actual run cases.

N = 26 Number of unique location for 1/8 core symmetry.

**Figure 5.1 Core Loading – All Advanced Mark-BW Fuel Configuration Structural Analysis**

| | | | | | | | | | | | | | | | |
|---|---|---|---|---|---|---|---|---|---|---|---|---|---|---|---|
| | | | | | | {3} | B | W | B | | | | | | |
| | | | | | {7} | W | B | W | B | W | B | W | | | |
| | | | | (9) | W | B | W | B | W | B | W | B | W | | |
| | | | (11) | W | B | W | B | W | B | W | B | W | B | W | |
| | | (13) | W | B | W | B | W | B | W | B | W | B | W | B | W |
| | | (13) | B | W | B | W | B | W | B | W | B | W | B | W | B |
| | (15) | B | W | B | W | B | W | B | W | B | W | B | W | B | W | B |
| | | W | B | W | B | W | B | W | B | W | B | W | B | W | B | W |
| | | B | W | B | W | B | W | B | W | B | W | B | W | B | W | B |
| | | | B | W | B | W | B | W | B | W | B | W | B | W | B | |
| | | | W | B | W | B | W | B | W | B | W | B | W | B | W | |
| | | | | W | B | W | B | W | B | W | B | W | B | W | | |
| | | | | | W | B | W | B | W | B | W | B | W | | | |
| | | | | | | | B | W | B | | | | | | |

**NOTES**

| B | Locations of permanent grid deformation from LOCA. |
|---|---|

One Mixed Core Configuration, 77 Advanced Mark-BW and 80 Westinghouse fuel assemblies in the core.

{#} Actual run cases.

(#) Number of fuel assemblies in a row.

**Figure 5.2 Core Loading – Mixed Core Configuration Number 1 - Structural Analysis**

| | | | | | | | | | | | | | | | |
|---|---|---|---|---|---|---|---|---|---|---|---|---|---|---|---|
| | | | | | | {3} | W | B | W | | | | | | |
| | | | | | {7} | B | W | B | W | B | W | B | | | |
| | | | | (9) | B | W | B | W | B | W | B | W | B | | |
| | | | (11) | B | W | B | W | B | W | B | W | B | W | B | |
| | | (13) | B | W | B | W | B | W | B | W | B | W | B | W | B |
| | | (13) | W | B | W | B | W | B | W | B | W | B | W | B | W |
| | (15) | W | B | W | B | W | B | W | B | W | B | W | B | W | B | W |
| | | B | W | B | W | B | W | B | W | B | W | B | W | B | W | B |
| | | W | B | W | B | W | B | W | B | W | B | W | B | W | B | W |
| | | | W | B | W | B | W | B | W | B | W | B | W | B | W | |
| | | | B | W | B | W | B | W | B | W | B | W | B | W | B | |
| | | | | B | W | B | W | B | W | B | W | B | W | B | | |
| | | | | | B | W | B | W | B | W | B | W | B | | | |
| | | | | | | | W | B | W | | | | | | |

**NOTES**

| | |
|---|---|
| B | Locations of permanent grid deformation from LOCA. |

Second Mixed Core Configuration, 80 Advanced Mark-BW and 77 Westinghouse fuel assemblies in the core.

{#} Actual run cases.

(#) Number of fuel assemblies in a row.

**Figure 5.3 Core Loading – Mixed Core Configuration Number 2 - Structural Analysis**

## 6.0 References

1. *Standard Review Plan*, Section 4.2, NUREG-0800 Revision 2, U.S. Nuclear Regulatory Commission, July 1981.

2. BAW-10172P, *Mark-BW Mechanical Design Report*, July 1988.

3. BAW-10227P-A, *Evaluation of Advanced Cladding and Structural Material (M5) in PWR Reactor Fuel*, February 2000.

4. BAW-10186P Revision 1 Supplement 1, *Mark-BW Extended Burnup*, November 2001.

5. BAW-10199P-A, *The BWU Critical Heat Flux Correlations*, December 1994.

6. BAW-10189P-A, *CHF Testing and Analysis of the Mark-BW Fuel Assembly Design*, January 1996.

7. BAW-10199P-A Addendum 2, *Application of the BWU-Z CHF Correlation to the Mark-BW17 Fuel Design with Mid-Span Mixing Grids*, November 2000.

8. BAW-10133P-A, *Mark-C Fuel Assembly LOCA-Seismic Analysis*, June 1986.

9. BAW-10133P-A Revision 1 Addendum 1, *Mark-C Fuel Assembly LOCA-Seismic Analyses*, October 2000.

10. BAW-10162P-A, *TACO3 Fuel Pin Analysis Computer Code*, October 1989.

11. BAW-10186P-A, *Extended Burnup Evaluation*, June 1997.

12. BAW-10147P-A Revision 1, *Fuel Rod Bowing in Babcock & Wilcox Fuel Designs*, May 1983.

13. BAW-10183P-A, *Fuel Rod Gas Pressure Criterion (FRGPC)*, July 1995.

14. BAW-10231P, *COPERNIC Fuel Rod Design Computer Code*, September 1999.

15. BAW-10156P-A Revision 1, *LYNXT: Core Transient Thermal-Hydraulic Program*, August 1993.

16. BAW-10084P-A, *Program to Determine In-Reactor Performance of BWFC Fuel Cladding Creep Collapse*, July 1995.

17. American Society of Mechanical Engineers, *Boiler and Pressure Vessel Code*, Section III, Nuclear Power Plant Components, 1992 Edition.