EPRI 1008239
Preliminary Report

NUREG/CR-6850
Draft for Comment

EPRI/NRC-RES
Fire PRA Methodology for Nuclear Power Facilities
Volume 2: Detailed Methodology

Electric Power Research Institute
3412 Hillview Avenue
Palo Alto, CA 94303

U.S. Nuclear Regulatory Commission
Office of Nuclear Regulatory Research
Washington, DC 20555-0001

AVAILABILITY OF REFERENCE MATERIALS IN NRC PUBLICATIONS

NRC Reference Material

As of November 1999, you may electronically access NUREG-series publications and other NRC records at NRC's Public Electronic Reading Room at http://www.nrc.gov/reading-rm.html. Publicly released records include, to name a few, NUREG-series publications; *Federal Register* notices; applicant, licensee, and vendor documents and correspondence; NRC correspondence and internal memoranda; bulletins and information notices; inspection and investigative reports; licensee event reports; and Commission papers and their attachments.

NRC publications in the NUREG series, NRC regulations, and *Title 10, Energy*, in the Code of *Federal Regulations* may also be purchased from one of these two sources.

1. The Superintendent of Documents
   U.S. Government Printing Office
   Mail Stop SSOP
   Washington, DC 20402–0001
   Internet: bookstore.gpo.gov
   Telephone: 202-512-1800
   Fax: 202-512-2250
2. The National Technical Information Service
   Springfield, VA 22161–0002
   www.ntis.gov
   1–800–553–6847 or, locally, 703–605–6000

A single copy of each NRC draft report for comment is available free, to the extent of supply, upon written request as follows:
Address: Office of the Chief Information Officer,
Reproduction and Distribution
Services Section
U.S. Nuclear Regulatory Commission
Washington, DC 20555-0001
E-mail: DISTRIBUTION@nrc.gov
Facsimile: 301–415–2289

Some publications in the NUREG series that are posted at NRC's Web site address http://www.nrc.gov/reading-rm/doc-collections/nuregs are updated periodically and may differ from the last printed version. Although references to material found on a Web site bear the date the material was accessed, the material available on the date cited may subsequently be removed from the site.

Non-NRC Reference Material

Documents available from public and special technical libraries include all open literature items, such as books, journal articles, and transactions, *Federal Register* notices, Federal and State legislation, and congressional reports. Such documents as theses, dissertations, foreign reports and translations, and non-NRC conference proceedings may be purchased from their sponsoring organization.

Copies of industry codes and standards used in a substantive manner in the NRC regulatory process are maintained at—
The NRC Technical Library
Two White Flint North
11545 Rockville Pike
Rockville, MD 20852–2738

These standards are available in the library for reference use by the public. Codes and standards are usually copyrighted and may be purchased from the originating organization or, if they are American National Standards, from—
American National Standards Institute
11 West 42nd Street
New York, NY 10036–8002
www.ansi.org
212–642–4900

Legally binding regulatory requirements are stated only in laws; NRC regulations; licenses, including technical specifications; or orders, not in NUREG-series publications. The views expressed in contractor-prepared publications in this series are not necessarily those of the NRC.

The NUREG series comprises (1) technical and administrative reports and books prepared by the staff (NUREG–XXXX) or agency contractors (NUREG/CR–XXXX), (2) proceedings of conferences (NUREG/CP–XXXX), (3) reports resulting from international agreements (NUREG/IA–XXXX), (4) brochures (NUREG/BR–XXXX), and (5) compilations of legal decisions and orders of the Commission and Atomic and Safety Licensing Boards and of Directors' decisions under Section 2.206 of NRC's regulations (NUREG–0750).

DISCLAIMER: This report was prepared as an account of work sponsored by an agency of the U.S. Government. Neither the U.S. Government nor any agency thereof, nor any employee, makes any warranty, expressed or implied, or assumes any legal liability or responsibility for any third party's use, or the results of such use, of any information, apparatus, product, or process disclosed in this publication, or represents that its use by such third party would not infringe privately owned rights.

EPRI/NRC-RES Fire PRA Methodology for Nuclear Power Facilities

Volume 2: Detailed Methodology

EPRI 1008239 **NUREG/CR-6850**

October 2004

Electric Power Research Institute (EPRI)
3412 Hillview Avenue
Palo Alto, CA 94303

EPRI Project Manager
R.P. Kassawara

Division of Risk Analysis and Applications
Office of Nuclear Regulatory Research (RES)
U.S. Nuclear Regulatory Commission
Two White Flint North, 11545 Rockville Pike
Rockville, MD 20852-2738

U.S. NRC-RES Project Manager
J.S. Hyslop

DISCLAIMER OF WARRANTIES AND LIMITATION OF LIABILITIES

THIS DOCUMENT WAS PREPARED BY THE ORGANIZATION(S) NAMED BELOW AS AN ACCOUNT OF WORK SPONSORED OR COSPONSORED BY THE ELECTRIC POWER RESEARCH INSTITUTE, INC. (EPRI). NEITHER EPRI, ANY MEMBER OF EPRI, ANY COSPONSOR, THE ORGANIZATION(S) BELOW, NOR ANY PERSON ACTING ON BEHALF OF ANY OF THEM:

(A) MAKES ANY WARRANTY OR REPRESENTATION WHATSOEVER, EXPRESS OR IMPLIED, (I) WITH RESPECT TO THE USE OF ANY INFORMATION, APPARATUS, METHOD, PROCESS, OR SIMILAR ITEM DISCLOSED IN THIS DOCUMENT, INCLUDING MERCHANTABILITY AND FITNESS FOR A PARTICULAR PURPOSE, OR (II) THAT SUCH USE DOES NOT INFRINGE ON OR INTERFERE WITH PRIVATELY OWNED RIGHTS, INCLUDING ANY PARTY'S INTELLECTUAL PROPERTY, OR (III) THAT THIS DOCUMENT IS SUITABLE TO ANY PARTICULAR USER'S CIRCUMSTANCE; OR

(B) ASSUMES RESPONSIBILITY FOR ANY DAMAGES OR OTHER LIABILITY WHATSOEVER (INCLUDING ANY CONSEQUENTIAL DAMAGES, EVEN IF EPRI OR ANY EPRI REPRESENTATIVE HAS BEEN ADVISED OF THE POSSIBILITY OF SUCH DAMAGES) RESULTING FROM YOUR SELECTION OR USE OF THIS DOCUMENT OR ANY INFORMATION, APPARATUS, METHOD, PROCESS, OR SIMILAR ITEM DISCLOSED IN THIS DOCUMENT.

ORGANIZATION(S) THAT PREPARED THIS DOCUMENT

Science Applications International Corporation

Sandia National Laboratories

ORDERING INFORMATION

Requests for copies of this report should be directed to EPRI Orders and Conferences, 1355 Willow Way, Suite 278, Concord, CA 94520, (800) 313-3774, press 2 or internally x5379, (925) 609-9169, (925) 609-1310 (fax).

Electric Power Research Institute and EPRI are registered service marks of the Electric Power Research Institute, Inc. EPRI. ELECTRIFY THE WORLD is a service mark of the Electric Power Research Institute, Inc.

Copyright © 2004 Electric Power Research Institute, Inc. All rights reserved.

COMMENTS ON DRAFT NUREG/CR-6850 REPORT

This report is being published jointly by EPRI and NRC. Any interested party may submit comments on this report for consideration by the NRC and EPRI staff. Comments may be accompanied by additional relevant information or supporting data. Please specify the report number NUREG/CR-6850, Volume 1 or Volume 2, draft, in your comments, and send them by December 10, 2004 to the following address:

Chief, Rules Review and Directives Branch
U.S. Nuclear Regulatory Commission
Mail Stop T-6D59
Washington, DC 20555-0001

For any questions about the material in this report, please contact:

J. S. Hyslop
Mail Stop T-10E50
U.S. Nuclear Regulatory Commission
Washington, DC 20555-0001
Phone: 301-415-6354
E-mail: JSH2@nrc.gov

If EPRI members wish to provide comments to EPRI as well, they may send them by December 10, 2004 to the following address:

R. P. Kassawara
Electric Power Research Institute
3412 Hillview Avenue
Palo Alto, CA 94304
Phone: 650-855-2775
E-mail: RKASSAWA@epri.com

CITATIONS

This report was prepared by

Science Applications International Corporation (SAIC)
4920 El Camino Real
Los Altos, CA 94022

Technical Program Manager
B. Najafi, SAIC

Technical Area Experts:
F. Joglar, SAIC
D. Funk Edan Engineering
G. Hannaman, SAIC
R. Anoba, Anoba Consulting

Sandia National Laboratories (SNL)
1515 Eubank SE
Albuquerque, NM 87185

Technical Program Manager
S. P. Nowlen, SNL

Technical Area Experts:
M. Kazarians, Kazarians and Associates
F. Wyant, SNL
A. Kolaczkowski, SAIC
J. Forester, SNL

This report describes research sponsored jointly by EPRI, and U.S. Nuclear Regulatory Commission, Office of Nuclear Regulatory Research (RES).

The report is a corporate document that should be cited in the literature in the following manner:

EPRI/NRC-RES Fire PRA Methodology for Nuclear Power Facilities: Volume 2: Detailed Methodology, Electric Power Research Institute (EPRI), Palo Alto, CA, and U.S. Nuclear Regulatory Commission, Office of Nuclear Regulatory Research (RES), Rockville, MD: 2004. EPRI TR-1008239 and NUREG/CR-6850.

ABSTRACT

This report documents state-of-the-art methods, tools, and data for the conduct of a fire Probabilistic Risk Assessment (PRA) for a commercial nuclear power plant (NPP) application. This report is intended to serve the needs of a fire risk analysis team by providing a structured framework for conduct of the overall analysis, as well as specific recommended practices to address each key aspect of the analysis. The methods have been developed under the Fire Risk Requantification Study. This study was conducted as a joint activity between the Electric Power Research Institute (EPRI) and the U.S. Nuclear Regulatory Commission (NRC) Office of Nuclear Regulatory Research (RES) under the terms of an EPRI/RES Memorandum of Understanding and an accompanying Fire Research Addendum. Participants from the U.S. Nuclear Power Industry supported demonstration analyses and provided peer review of this methodology. Methodological issues raised in past fire risk analyses, including the Individual Plant Examination of External Events (IPEEE) fire analyses, have been addressed to the extent allowed by the current state-of-the-art and the overall project scope. While the primary objective of the project was to consolidate existing state-of-the-art methods, in many areas, the newly documented methods represent a significant advancement over previously documented methods.

CONTENTS

1 PLANT BOUNDARY DEFINITION AND PARTITIONING (TASK 1) 1-1
1.1 Purpose 1-1
1.2 Scope 1-1
1.3 Background Information 1-1
1.3.1 General Task Objectives and Approach 1-1
1.3.2 Assumptions 1-2
1.3.3 Background Information 1-2
1.4 Task Interfaces 1-3
1.4.1 Input from Other Tasks 1-3
1.4.2 Additional Plant Information Needed to Support this Task 1-3
1.4.3 Walkdowns 1-3
1.4.4 Outputs to Other Tasks 1-3
1.5 Procedure 1-3
1.5.1 Step 1: Selection of Global Plant Analysis Boundary 1-3
1.5.2 Step 2: Plant Partitioning 1-4
1.5.3 Step 3: Compartment Information Gathering and Characterization 1-8
1.5.4 Step 4: Documentation 1-9
1.6 Uncertainty 1-10

2 FIRE PRA COMPONENTS SELECTION (TASK 2) 2-1
2.1 Purpose 2-1
2.2 Scope 2-1
2.3 Background Information 2-2
2.3.1 General Task Objectives and Approach 2-2
2.3.2 Assumptions 2-3
2.4 Task Interfaces 2-4
2.4.1 Input from Other Tasks 2-4
2.4.2 Additional Plant Information Needed to Support this Task 2-5

2.4.3 Walkdowns 2-5
2.4.4 Outputs to Other Tasks 2-5
2.5 Procedure 2-5
2.5.1 Step 1: Identify Internal Events PRA Sequences to be Included (and those to be excluded) in the Fire PRA Model 2-6
2.5.2 Step 2: Review the Internal Events PRA Model Against the Fire Safe Shutdown Analysis 2-8
2.5.2.1 Step 2.1: Reconcile Function/Success Criteria/Sequence Differences 2-9
2.5.2.2 Step 2.2: Reconcile System (Including Support System) Differences 2-10
2.5.2.3 Step 2.3: Reconcile System/Equipment Differences Due to End-State and Mission Considerations 2-11
2.5.2.4 Step 2.4: Reconcile Other Miscellaneous Equipment Differences 2-11
2.5.2.5 Step 2.5: Specific Review of Manual Actions 2-12
2.5.3 Step 3: Identify Equipment Associated with Fire-Induced Initiating Events 2-13
2.5.4 Step 4: Identify Equipment with Potential Spurious Actuations that may Challenge the Safe Shutdown Capability 2-14
2.5.5 Step 5: Identify Additional Mitigating, Instrumentation, and Diagnostic Equipment Important to Human Response 2-17
2.5.5.1 Step 5.1: Identify Human Actions of Interest 2-17
2.5.5.2 Step 5.2: Identify Instrumentation and Diagnostic Equipment Associated with both Credited and Potentially Harmful Human Actions 2-17
2.5.6 Step 6: Include “Potentially High Consequence” Related Equipment 2-19
2.5.7 Step 7: Assemble Fire PRA Equipment List 2-20
2.6 Uncertainty 2-21
2.7 References 2-23

***3* FIRE PRA CABLE SELECTION (TASK 3) 3-1**
3.1 Purpose 3-1
3.2 Scope 3-1
3.3 Background Information 3-2
3.3.1 General Task Objectives and Approach 3-2
3.3.2 Assumptions 3-2
3.4 Task Interfaces 3-4
3.4.1 Input from Other Tasks 3-4
3.4.1.1 Plant Boundary Definition and Partitioning (Task 1) 3-4
3.4.1.2 Fire PRA Components Selection (Task 2) 3-4
3.4.1.3 Fire PRA Database System (Support Task B) 3-4

3.4.2 Additional Plant Information Needed to Support this Task 3-5
3.4.2.1 Plant Cable and Raceway Data System 3-5
3.4.2.2 Plant Appendix R of 10 CFR Part 50 Safe Shutdown Analysis 3-5
3.4.2.3 Other Information and Data 3-5
3.4.3 Walkdowns 3-6
3.4.4 Outputs to Other Tasks 3-6
3.5 Procedure 3-6
3.5.1 Step 1: Compile and Evaluate Prerequisite Information and Data 3-6
3.5.1.1 Step 1.1: Confirm Plant Partitioning Boundary Designations 3-7
3.5.1.2 Step 1.2: Confirm Fire PRA Equipment List 3-7
3.5.1.3 Step 1.3: Cable and Raceway System 3-8
3.5.2 Step 2: Select Fire PRA Circuits/Cables 3-9
3.5.2.1 Step 2.1: Develop Strategy for Cable Selection 3-9
3.5.2.2 Step 2.2: Develop Plant-Specific Rules for Cable Selection 3-11
3.5.2.3 Step 2.3: Select Fire PRA Cables 3-15
3.5.3 Step 3: Identify and Select Fire PRA Power Supplies 3-16
3.5.3.1 Step 3.1: Select Fire PRA Power Supplies 3-16
3.5.3.2 Step 3.2: Add Fire PRA Power Supply to Equipment List 3-16
3.5.4 Step 4: Perform Associated Circuits Review 3-17
3.5.4.1 Step 4.1: Confirm Satisfactory Electrical Coordination for Fire PRA Power Supplies 3-18
3.5.4.2 Step 4.2: Confirm Satisfactory Electrical Overcurrent Protection for Common Enclosures Issues 3-18
3.5.4.3 Step 4.3: Add Associated Circuits to Fire PRA Cable List 3-19
3.5.5 Step 5: Determine Cable Routing and Plant Locations 3-19
3.5.5.1 Step 5.1: Determine Cable Routing and End Points 3-19
3.5.5.2 Step 5.2: Determine Raceway and End Point Locations 3-20
3.5.5.3 Step 5.3: Determine Raceway Fire Protection Features 3-20
3.5.6 Step 6: Fire PRA Cable List and Target Equipment Location Reports 3-21
3.5.6.1 Step 6.1: Assemble Fire PRA Cable List 3-21
3.5.6.2 Step 6.2: Generate Target Equipment Location Reports 3-21
3.6 Uncertainty 3-22
3.6.1 Plant Partitioning and Cable Location 3-22
3.6.2 Plant-Specific Cable Selection Rules 3-22
3.6.3 Cable Selection Process 3-22

3.6.4 Cable and Raceway Routing Accuracy 3-23
3.6.5 Electrical Coordination and Protection 3-23

4 QUALITATIVE SCREENING (TASK 4) 4-1
4.1 Purpose 4-1
4.2 Scope 4-1
4.3 Background Information 4-1
4.3.1 General Task Objectives and Approach 4-1
4.3.2 Assumptions 4-1
4.4 Task Interfaces 4-2
4.4.3 Input From Other Tasks 4-2
4.4.4 Additional Plant Information to Support this Task 4-2
4.4.5 Walkdowns 4-2
4.4.6 Outputs to Other Tasks 4-2
4.5 Procedure 4-2
4.6 Uncertainty 4-4

5 FIRE-INDUCED RISK MODEL (TASK 5) 5-1
5.1 Purpose 5-1
5.2 Scope 5-1
5.3 Background Information 5-1
5.3.1 General Task Objectives and Approach 5-1
5.3.2 Assumptions 5-2
5.4 Task Interfaces 5-2
5.4.1 Input From Other Tasks 5-2
5.4.2 Additional Plant Information Needed to Support this Task 5-2
5.4.3 Walkdowns 5-3
5.4.4 Outputs to Other Tasks 5-3
5.5 Procedure 5-3
5.5.1 Step 1: Develop CDF or CCDP Model 5-3
5.5.1.1 Step 1.1: Select Appropriate Fire-Induced Accident Initiators and Sequences and Verify against the Equipment List and Failure Modes 5-3
5.5.1.2 Step 1.2: Incorporate Fire-Induced Equipment Failures 5-5
5.5.1.3 Step1.3: Incorporate Fire-Induced Human Failures 5-8
5.5.2 Step 2: Develop LERF/CLERP Model 5-9

5.5.2.1 Step 2.1: Select Appropriate Fire-Induced Accident Initiators and Sequences and Verify against the Equipment List and Failure Modes....5-9
5.5.2.2 Step 2.2: Incorporate Fire-Induced Equipment Failures....5-9
5.5.2.3 Step 2.3: Incorporate Fire-Induced Human Failures....5-9
5.6 Uncertainty....5-10

6 FIRE IGNITION FREQUENCIES (TASK 6)....6-1
6.1 Purpose....6-1
6.2 Scope....6-1
6.3 Background Information....6-1
6.3.1 General Task Objectives and Approach....6-1
6.3.2 Assumptions....6-6
6.4 Task Interfaces....6-6
6.4.1 Input From Other Tasks....6-6
6.4.2 Additional Plant Information Needed to Support this Task....6-6
6.4.3 Walkdowns....6-6
6.4.4 Outputs to Other Tasks....6-6
6.5 Procedure....6-7
6.5.1 Step 1: Mapping Plant Ignition Sources to Generic Sources....6-7
6.5.2 Step 2: Plant Fire Event Data Collection and Review....6-8
6.5.3 Step 3: Plant Specific Updates of Generic Ignition Frequencies....6-9
6.5.4 Step 4: Mapping Plant-Specific Locations to Generic Locations....6-10
6.5.5 Step 5: Location Weighting Factors....6-12
6.5.6 Step 6: Fixed Fire Ignition Source Counts....6-12
6.5.7 Step 7: Ignition Source Weighting Factors....6-18
6.5.7.1 Countable Items....6-18
6.5.7.2 Transients....6-18
6.5.7.3 Large Systems....6-22
6.5.8 Step 8: Ignition Source and Compartment Fire Frequency....6-23
6.6 Uncertainty....6-23
6.7 References....6-23

7 QUANTITATIVE SCREENING (TASK 7)....7-1
7.1 Purpose....7-1
7.2 Scope....7-1

7.3 Background Information 7-1
7.3.1 General Task Objectives and Approach 7-1
7.3.1 Assumptions 7-3
7.4 Task Interfaces 7-3
7.4.1 Input From Other Tasks 7-3
7.4.2 Additional Plant Information Needed to Support this Task 7-3
7.4.3 Walkdowns 7-3
7.4.4 Outputs to Other Tasks 7-3
7.5 Procedure 7-4
7.5.1 Step 1: Quantify CDF Model 7-4
7.5.1.1 Step 1.1: Quantify CCDP Model 7-6
7.5.1.2 Step 1.2: Quantify CDF Frequencies 7-6
7.5.1.3 Step 1.3: Quantify ICDP Values (Optional) 7-6
7.5.2 Step 2: Quantify LERF Model 7-6
7.5.2.1 Step 2.1: Quantify CLERP Model 7-7
7.5.2.2 Step 2.2: Quantify LERF Frequencies 7-7
7.5.2.3 Step 2.3: Quantify ILERP Values (Optional) 7-7
7.5.3 Step 3: Quantitative Screening 7-8
7.6 Uncertainty 7-9

***8* SCOPING FIRE MODELING (TASK 8) 8-1**
8.1 Purpose 8-1
8.2 Scope 8-1
8.3 Background Information 8-2
8.3.1 General Task Objectives and Approach 8-2
8.3.2 Assumptions 8-7
8.4 Task Interfaces 8-8
8.4.1 Input From Other Tasks 8-8
8.4.2 Additional Plant Information Needed to Support this Task 8-8
8.4.3 Walkdowns 8-8
8.4.4 Outputs to Other Tasks 8-8
8.5 Procedure 8-9
8.5.1 Step 1: Preparation for Walkdown 8-9
8.5.1.1 Step 1.1: Estimate Heat Release Rate for Fixed Ignition Source Screening 8-9

8.5.1.2 Step 1.2: Target and Intervening Combustible Damage and Ignition Criteria 8-9
8.5.1.3 Step 1.3: Develop Zones of Influence 8-11
8.5.2 Step 2: Plant Walkdown 8-11
8.5.3 Step 3: Verification of Screened Ignition Sources 8-12
8.5.3.1 Loss of the Fire Source Affects One PRA Component 8-12
8.5.3.2 Loss of Fire Source Affects Two or More Redundant Components Associated with the Fire PRA Equipment List 8-13
8.5.4 Step 4: Calculation of Severity Factors 8-13
8.5.5 Step 5: Calculation of Revised Compartment Fire Frequency 8-13
8.6 Uncertainty 8-14
8.7 References 8-14

9 DETAILED CIRCUIT FAILURE ANALYSIS (TASK 9) 9-1
9.1 Purpose 9-1
9.2 Scope 9-1
9.3 Background Information 9-2
9.3.1 General Task Objectives and Approach 9-2
9.3.2 Assumptions 9-2
9.4 Task Interfaces 9-3
9.4.1 Input from Other Tasks 9-3
9.4.1.1 Fire PRA Components Selection (Task 2) 9-3
9.4.1.2 Fire PRA Cable Selection (Task 3) 9-4
9.4.1.3 Fire PRA Database System (Support Task B) 9-4
9.4.1.4 Quantitative Screening (Task 7) 9-4
9.4.1.5 Detailed Fire Modeling (Task 11) 9-4
9.4.2 Additional Plant Information Needed to Support this Task 9-4
9.4.2.1 Plant Appendix R of 10 CFR Part 50 Safe Shutdown Circuit Analysis 9-4
9.4.2.2 Other Information and Data 9-5
9.4.3 Walkdowns 9-5
9.4.4 Outputs to Other Tasks 9-5
9.5 Procedure 9-5
9.5.1 Step 1: Compile and Evaluate Prerequisite Information and Data 9-6
9.5.1.1 Step 1.1: Confirm Fire PRA Cable List is Available in the Fire PRA Database 9-6

9.5.1.2 Step 1.2: Confirm Unscreened Plant Compartments and Scenarios are Identified 9-6
9.5.2 Step 2: Perform Detailed Circuit/Cable Failure Analysis 9-7
9.5.2.1 Step 2.1: Develop Strategy for Circuit Analysis 9-7
9.5.2.2 Step 2.2: Develop Plant-Specific Rules for Performing Circuit Analysis 9-7
9.5.2.3 Step 2.3: Perform Detailed Circuit Failure Analysis 9-12
9.5.3 Step 3: Generate Equipment Failure Response Reports 9-13
9.6 Uncertainty 9-14
9.6.1 Plant-Specific Circuit Analysis Rules 9-14
9.6.2 Detailed Circuit Analysis Process 9-14
9.7 References 9-14

***10* CIRCUIT FAILURE MODE LIKELIHOOD ANALYSIS (TASK 10) 10-1**
10.1 Purpose 10-1
10.2 Scope 10-1
10.3 Background Information 10-1
10.3.1 General Task Objectives and Approach 10-1
10.3.2 Assumptions 10-2
10.4 Task Interfaces 10-3
10.4.1 Input from Other Tasks 10-3
10.4.1.1 Fire PRA Cable Selection (Task 3) 10-3
10.4.1.2 Fire PRA Database System (Support Task B) 10-3
10.4.1.3 Detailed Circuit Failure Analysis (Task 9) 10-3
10.4.1.4 Detailed Fire Modeling and Quantification of Fire Risk (Tasks 11 and 14) 10-3
10.4.2 Additional Plant Information Needed to Support this Task 10-3
10.4.3 Walkdowns 10-4
10.4.4 Outputs to Other Tasks 10-4
10.5 Procedure 10-4
10.5.1 Step 1: Compile and Evaluate Prerequisite Information and Data 10-5
10.5.2 Step 2: Select Analysis Approach 10-5
10.5.3 Step 3: Perform Circuit Failure Mode Probability Analyses 10-6
10.5.3.1 Option #1: Failure Mode Probability Estimate Table 10-6
10.5.3.2 Option #2: Computational Probability Estimates 10-7
10.5.4 Step 4: Generate Circuit Failure Mode Probability Reports 10-9

10.5.4.1 Step 4.1: Assemble Circuit Failure Mode Probability List 10-10
10.5.4.2 Step 4.2: Generate Circuit Failure Mode Probability Reports 10-10
10.6 Uncertainty 10-10
10.7 References 10-11

***11* DETAILED FIRE MODELING (TASK 11) 11-1**
11.1 Purpose 11-1
11.2 Scope 11-1
11.3 Background Information 11-2
11.3.1 General Task Objectives 11-2
11.3.2 General Approach 11-3
11.3.3 Selecting Fire Ignition Sources 11-6
11.3.4 Severity Factor 11-7
11.3.5 Detection and Suppression Analysis 11-8
11.3.6 Assumptions 11-11
11.3.7 Additional Supporting Documentation 11-12
11.4 Task Interfaces 11-12
11.4.1 Input From Other Tasks 11-12
11.4.2 Additional Plant Information Needed to Support this Task 11-13
11.4.3 Walkdowns 11-13
11.4.4 Outputs to Other Tasks 11-13
11.5 Procedure 11-14
11.5.1 Single Compartment Fire Scenarios 11-14
11.5.1.1 Step 1.a: Identify and Characterize Compartment 11-15
11.5.1.2 Step 2.a: Identify and Characterize Fire Detection and Suppression Features and Systems 11-15
11.5.1.3 Step 3.a: Characterize Fire Ignition Sources 11-17
11.5.1.4 Step 4.a: Identify Secondary Combustibles 11-18
11.5.1.5 Step 5.a: Identify and Characterize Target Sets 11-19
11.5.1.6 Step 6.a: Define the Fire Scenarios to be Analyzed 11-20
11.5.1.7 Step 7.a: Conduct Fire Growth and Propagation Analysis: 11-21
11.5.1.7.1 Step 7.a.1: Selection of Fire Modeling Tools 11-21
11.5.1.7.2 Step 7.a.2: Analyze Growth Behavior of the Initial Fire Source (If Applicable) 11-22
11.5.1.7.3 Step 7.a.3: Analyze Fire Spread to Secondary Combustibles (As Applicable) 11-23

11.5.1.7.4 Step 7.a.4: Analyze Growth of Fire in Secondary Combustibles (As Applicable) 11-24

11.5.1.7.5 Step 7.a.5: Estimate the Resulting Adverse Environmental Conditions 11-24

11.5.1.7.6 Step 7.a.6: Estimate Time to Target Set Damage 11-24

11.5.1.8 Step 8.a: Conduct Fire Detection and Suppression Analysis 11-26

11.5.1.8.1 Step 8.a.1: Assess Fire Detection Timing 11-27

11.5.1.8.2 Step 8.a.2: Assess Timing, Reliability, and Effectiveness of Fixed-Fire Suppression Systems 11-27

11.5.1.8.3 Step 8.a.3: Assess Manual Fire Brigade Response 11-29

11.5.1.8.4 Step 8.a.4: Estimate Probability of Fire Suppression as a Function of Time 11-29

11.5.1.9 Step 9.a: Calculate Conditional Nonsuppression Probability and Severity Factor 11-29

11.5.1.10 Step 10.a: Calculate Scenario Frequency 11-30

11.5.1.11 Step 11.a: Document Analysis Results 11-30

11.5.1 Procedure for the Analysis of Fire Scenarios Impacting the Main Control Room 11-30

11.5.1.1 The Overall Approach 11-31

11.5.1.1.1 Step 1.b: Identify and Characterize Main Control Room Features 11-32

11.5.1.1.2 Step 2.b: Estimate Control Room Fire Frequency 11-32

11.5.1.1.3 Step 3.b: Identify and Characterize Fire Detection and Suppression Features and Systems 11-33

11.5.1.1.4 Step 4.b: Characterize Alternate Shutdown Features 11-34

11.5.1.1.5 Step 5.b: Identify and Characterize Target Sets 11-34

11.5.1.1.6 Step 6.b: Identify and Characterize Ignition Sources 11-35

11.5.1.1.7 Step 7.b: Define Fire Scenarios 11-35

11.5.1.1.8 Step 8.b: Conduct Fire Growth and Propagation Analysis 11-36

11.5.1.1.9 Step 9.b: Detection and Suppression Analysis and Severity Factor 11-38

11.5.1.1.10 Step 10.b: Estimate Failure Probability of Using Alternate Shutdown Features 11-38

11.5.1.1.11 Step 11.b: Estimate Probability of Control Room Abandonment 11-39

11.5.1.1.12 Step 12.b: Calculate Scenario Frequencies 11-40

11.5.1.1.13 Step 13.b: Document Analysis Results 11-40

11.5.2 Procedure for the Analysis of Fire Scenarios Impacting Multiple Compartments 11-40

11.5.2.1 The Overall Approach 11-41

11.5.2.1.1 Step 1.c: Exposing and Exposed Compartments Matrix 11-42
11.5.2.1.2 Step 2.c: First Screening – Qualitative 11-43
11.5.2.1.3 Step 3.c: Second Screening – Low Fire Load Exposing Compartments 11-43
11.5.2.1.4 Step 4.c: Third Screening – Frequency of Occurrence 11-44
11.5.2.1.5 Step 5.c: Fourth Screening – CDF Based 11-45
11.5.2.1.6 Step 6.c: Detailed Analysis 11-45
11.5.2.1.7 Step 7.b: Document Analysis Results 11-45
11.6 Uncertainty 11-45
11.7 References 11-46

***12* POST-FIRE HUMAN RELIABILITY ANALYSIS (TASK 12) 12-1**
12.1 Purpose 12-1
12.2 Scope 12-1
12.3 Background Information 12-2
12.3.1 General Task Objectives and Approach 12-2
12.3.2 Assumptions 12-2
12.4 Task Interfaces 12-3
12.4.1 Input From Other Tasks 12-3
12.4.2 Additional Plant Information Needed to Support this Task 12-4
12.4.3 Walkdowns 12-4
12.4.4 Outputs to Other Tasks 12-4
12.5 Procedure – Preparation of Postfire HRA Package 12-5
12.5.1 Step 1: Modifying and Adding Human Failure Events to the Model 12-5
12.5.1.1 Review Existing Internal Events HFEs 12-5
12.5.1.2 Add New HFEs 12-5
12.5.1.3 Elements of the Identification Process 12-6
12.5.2 Step 2: Assigning Quantitative Screening Human Error Probabilities 12-7
12.5.3 Method for Assigning Screening Values to HFEs (Sets 1, 2, 3, and 4) 12-8
12.5.3.1 Screening Values Under Set 1 12-8
12.5.3.2 Set 1 Criteria 12-8
12.5.3.3 Screening Values Under Set 2 12-10
12.5.3.4 Set 2 Criteria 12-10
12.5.3.5 Screening Values Under Set 3 12-10
12.5.3.6 Set 3 Criteria 12-11

12.5.3.7 Screening Values Under Set 4 12-11
12.5.3.8 Set 4. Criterion 12-11
12.5.4 Basis for Quantitative Screening Values 12-11
12.5.5 Step 3: Performing Detailed Best-Estimate Analyses of the Important HFEs ... 12-12
12.5.5.1 PSFs and Fire Effects to Consider 12-13
12.5.5.2 Special Case–MCR Abandonment 12-14
12.5.5.3 Cases where Little or no Credit Should be Allowed 12-15
12.5.6 Step 4: Documenting the Post-Fire HRA 12-16
12.6 Uncertainties 12-17
12.7 References 12-17

***13* SEISMIC-FIRE INTERACTIONS ASSESSMENT (TASK 13) 13-1**
13.1 Purpose 13-1
13.2 Scope 13-1
13.3 Background Information 13-2
13.3.1 Seismically Induced Fires 13-2
13.3.2 Degradation of Fire Suppression Systems and Features 13-2
13.3.3 Spurious Actuation of Suppression and/or Detection Systems 13-3
13.3.4 Degradation of Manual Firefighting Effectiveness 13-4
13.4 Assumptions 13-4
13.5 Task Interfaces 13-4
13.5.1 Input from Other Tasks 13-4
13.5.2 Additional Plant Information Needed to Complete this Task 13-5
13.5.3 Walkdowns 13-5
13.5.4 Output to Other Tasks 13-5
13.6 Assessment Procedure 13-5
13.6.1 Step 1: Identify Key Seismic-Fire Interaction Analysis Compartments 13-5
13.6.2 Step 2: Assess Seismically Induced Fires 13-6
13.6.3 Step 3: Assess Seismic Degradation of Fire Suppression Systems and Features 13-7
13.6.4 Step 4: Assess the Potential Impact of Spurious Fire Detection Signals 13-7
13.6.5 Step 5: Assess the Potential Impact of Spurious Fire Suppression System Actuations 13-7
13.6.6 Step 6: Assess the Potential Impact of a Seismic Event on Manual Firefighting 13-8
13.6.7 Step 7: Complete Documentation 13-8

13.7 Uncertainty 13-8

14 **FIRE RISK QUANTIFICATION (TASK 14) 14-1**

14.1 Purpose 14-1

14.2 Scope 14-1

14.3 Task Interfaces 14-1

14.3.1 Input From Other Tasks 14-1

14.3.2 Additional Plant Information Needed to Support this Task 14-1

14.3.3 Walkdowns 14-2

14.4 Background Information 14-2

14.4.1 General Task Objectives and Approach 14-2

14.4.2 Assumptions 14-2

14.4.3 Outputs to Other Tasks 14-2

14.5 Procedure 14-2

14.5.1 Step 1: Quantify Final Fire CDF Model 14-2

14.5.1.1 Step 1.1: Quantify Final Fire CCDP Model 14-3

14.5.1.2 Step 1.2: Quantify Final Fire CDF Frequencies 14-3

14.5.1.3 Step 1.3: Identify Main Contributors to the Fire CDF 14-3

14.5.2 Step 2: Quantify Final Fire LERF Model 14-3

14.5.2.1 Step 2.1: Quantify Final Fire CLERP Model 14-4

14.5.2.2 Step 2.2: Quantify Final Fire LERF Frequencies 14-4

14.5.2.3 Step 2.3: Identify Main Contributors to the Fire LERF 14-4

14.5.3 Step 3: Propagate Uncertainty Distributions 14-4

14.5.4 Step 4: Sensitivity Analysis 14-5

14.5.4.1 Step 4.1 Identification of Final Set of Sensitivity Analysis Cases 14-5

14.5.4.2 Step 4.2 CDF and/or LERF Computations and Comparison 14-5

14.6 Uncertainty 14-5

14.7 References 14-5

15 **UNCERTAINTY AND SENSITIVITY ANALYSIS (TASK 15) 15-1**

15.1 Purpose 15-1

15.2 Scope 15-1

15.3 Background Information 15-1

15.3.1 General Task Objectives and Approach 15-1

15.3.2 Assumptions 15-2

15.4 Task Interfaces 15-2
15.4.1 Input From Other Tasks 15-2
15.4.2 Additional Plant Information Needed to Support this Task 15-2
15.4.3 Walkdowns 15-2
15.4.4 Outputs to Other Tasks 15-3
15.5 Procedure 15-3
15.5.1 Step 1: Identify Uncertainties Associated with Each Task 15-3
15.5.2 Step 2: Develop Strategies for Addressing the Uncertainties 15-3
15.5.3 Step 3: Perform Review of Uncertainties to Make Final Decisions as to Which Uncertainties Will Be Addressed and How 15-4

***16* FIRE PRA DOCUMENTATION (TASK 16) 16-1**
16.1 Purpose 16-1
16.2 Scope 16-1
16.3 Background Information 16-1
16.3.1 General Task Objectives and Approach 16-1
16.3.2 Assumptions 16-1
16.4 Task Interfaces 16-1
16.4.1 Input From Other Tasks 16-1
16.4.2 Additional Plant Information Needed to Support this Task 16-1
16.4.3 Walkdowns 16-1
16.4.4 Outputs to Other Tasks 16-2
16.5 Procedure 16-2
16.6 Uncertainty 16-2

***17* PLANT WALKDOWNS (SUPPORT TASK A) 17-1**
17.1 Introduction 17-1
17.2 Overall Walkdown Approach 17-1
17.3 Typical Walkdown Needs 17-3

***18* FIRE PRA DATABASE SYSTEM (SUPPORT TASK B) 18-1**
18.1 Purpose 18-1
18.2 Scope 18-1
18.3 Background Information 18-2
18.3.1 General Task Objectives and Approach 18-2
18.3.2 Assumptions 18-2

18.4 Task Interfaces 18-3
18.4.1 Input From Other Tasks 18-3
18.4.1.1 Plant Partitioning Boundaries and Designations 18-3
18.4.1.2 Plant Cable and Raceway Data 18-3
18.4.1.3 Fire PRA Equipment 18-4
18.4.1.4 Fire PRA Cable Selection 18-4
18.4.2 Additional Plant Information Needed to Support this Task 18-4
18.4.3 Walkdowns 18-4
18.4.4 Outputs to Other Tasks 18-4
18.5 Procedure 18-5
18.5.1 Step 1: Database Structure and Functional Criteria 18-5
18.5.1.1 Step 1.1: Database Functional Criteria 18-5
18.5.1.1.1 Data Input Criteria 18-5
18.5.1.1.2 Output Criteria 18-5
18.5.1.2 Step 1.2: Database Structure and Data Fields 18-6
18.5.2 Step 2: Database Platform 18-6
18.5.3 Step 3: Database Augmentation Plan 18-7
18.5.4 Step 4: Implement Database Upgrades 18-7
18.6 Uncertainty 18-7

***19* GLOSSARY 19-1**

***A* APPENDIX FOR CHAPTER 2, TECHNICAL BASES A-1**
A.1 Use of the Internal Events PRA and the Fire Safe Shutdown Analysis as the Primary Technical Inputs A-1
A.1.1 Basis A-2
A.2 Necessary Modifications/Additions to the Fire PRA Equipment List A-3
A.2.1 Basis A-3
A.3 Consideration of a Reasonable Number of Spurious Events A-4
A.3.1 Basis A-5
A.4 References A-6

***B* APPENDIX FOR CHAPTER 3, EXAMPLE B-1**

***C* APPENDIX FOR CHAPTER 6, DETERMINATION OF GENERIC FIRE FREQUENCIES C-1**

C.1 Methodology Summary C-1
C.2 Screening Events for Inclusion in the Calculation of Generic Fire Frequencies C-3
C.2.1 Where and When a Fire Occurred C-3
C.2.2 Potentially Challenging Events C-3
C.2.3 Criteria for Classification of Fire Events C-7
C.2.3.1 Objective Classification Criteria C-7
C.2.3.2 Subjective Classification Criteria C-9
C.2.4 Implications of the Event Screening Process and Criteria C-9
C.3 Additional Considerations C-10
C.3.1 Fire Events in Decommissioned Plants C-16
C.3.2 Estimated Reactor Years of Power and Low-Power Operation C-16
C.4 References C-16

***D* APPENDIX FOR CHAPTER 7, TECHNICAL BASES D-1**
D.1 References D-2

***E* APPENDIX FOR CHAPTERS 8 AND 11, SEVERITY FACTORS E-1**
E.1 Severity Factor Determination E-1
E.2 Discretized Heat Release Rate Distributions E-2
E.3 Probability Distribution for Heat Release Rates in Oil Spill Fire Scenarios E-11

***F* APPENDIX FOR CHAPTER 8, WALKDOWN FORMS F-1**
F.1 Fixed Ignition Source Form F-1
F.1.1 Form Inputs F-1
F.2 Fire Zone of Influence Form F-4
F.2.1 Form Inputs F-7

***G* APPENDIX FOR CHAPTERS 8 AND 11, HEAT RELEASE RATES G-1**
G.1 Background G-1
G.2 About Recommended Heat Release Rate Values G-3
G.2.1 Overview G-3
G.2.2 Basis G-3
G.3 Heat Release Rates for Fixed Ignition Sources G-4
G.3.1 Growth of Electrical Cabinet Fires G-5
G.3.2 Location of Electrical Cabinet Fires G-7
G.3.3 Fire Propagation in Electrical Cabinets G-8

G.4 Heat Release Rates for Flammable Liquid Fires G-9
G.5 Technical Basis for Recommended HRR for Transient Ignition Sources G-11
G.6 Supplemental Information: Experimental Heat Release Rate Measurements G-12
G.7 Supplemental Information: Examples of Determining Heat Release Rates for Typical Electrical Cabinets in Nuclear Power Plants G-12
G.8 References G-37

***H* APPENDIX FOR CHAPTERS 8 AND 11, DAMAGE CRITERIA H-1**
H.1 Electrical Cables H-1
H.1.1 Generic Cable Damage and Ignition Criteria H-1
H.1.2 Mixed Cable Insulation/Jacket Type Configurations H-2
H.1.3 Thermoplastic Jacketed, Thermoset Insulated Cables H-3
H.1.4 Specific Data for Specific Cable Types H-4
H.2 Other Equipment H-6
H.3 References for Appendix H H-6

***I* APPENDIX FOR CHAPTER 9, EXAMPLES OF COMPONENT CIRCUITS ANALYSES I-1**
I.1 Typical SOV Control Circuit I-1
I.2 Typical MOV Control Circuit I-3
I.3 Control Circuit with Double-Pole Isolation Switches I-5
I.4 Ungrounded AC MOV Control Circuit with Contacts on the Downstream Leg and Normal Contact Arrangement I-6
I.5 Ungrounded MOV Control Circuit with Normal Contact Arrangement I-8
I.6 MOV with Redundant Main Contactors and Independent Control Circuits I-10

***J* APPENDIX FOR CHAPTER 10, TECHNICAL BASIS FOR CIRCUIT FAILURE MODE LIKELIHOOD EQUATIONS J-1**
J.1 Computational Probability Estimates J-1
J.1.1 Estimating P_{CC} J-1
J.1.2 Calculating CCF J-4
J.1.3 Calculating PFM J-6

***K* APPENDIX FOR CHAPTER 10, EXAMPLES OF COMPONENT CIRCUIT FAILURE MODE LIKELIHOOD ANALYSES K-1**
K.1 Typical SOV Control Circuit K-1
K.2 Typical MOV Control Circuit K-5
K.3 Control Circuit with Double-Pole Isolation Switches K-9

K.4 Ungrounded AC MOV Control Circuit with Contacts on the Downstream Leg and Normal Contact Arrangement K-11
K.5 Ungrounded MOV Control Circuit with Normal Contact Arrangement K-16
K.6 MOV with Redundant Main Contactors and Independent Control Circuits K-18

***L* APPENDIX FOR CHAPTER 11, MAIN CONTROL BOARD FIRES L-1**
L.1 Introduction L-1
L.2 Probability of Target Damage L-3
L.3 Calculating Scenario Frequency L-3
L.4 Model Description L-4
L.5 Example L-7
L.6 References L-8

***M* APPENDIX FOR CHAPTER 11, HIGH ENERGY ARCING FAULTS M-1**
M.1 Introduction M-1
M.2 High Energy Electrical Arcing Phenomena M-1
M.3 U.S. Nuclear Power Plants Operating Experience M-2
M.4 Damage Characterization During the Energetic Phase (Zone of Influence) M-12
M.4.1 General Room Heat Up M-12
M.4.2 High Energy Zone of Influence M-13
M.5 Characterization of Detection/Suppression During the Energetic Phase M-15
M.6 Modeling High-Energy Arcing Faults in the Fire PRA M-15
M.6.1 Risk Quantification of High-Arcing Fault Events M-15
M.6.1.1 Example M-16
M.6.2 Risk Quantification of Regular Cabinet Fires M-17
M.7 References for Appendix M M-17

***N* APPENDIX FOR CHAPTER 11, HYDROGEN FIRES N-1**
N.1 Background N-1
N.1.1 Hydrogen in Nuclear Power Plants N-2
N.1.2 Hydrogen Fire and Explosion Experience N-3
N.2 Evaluation of Fires Involving Hydrogen N-4
N.2.1 Turbine/Generator Hydrogen Fires N-5
N.2.2 Boiling Water Reactors–Hydrogen Recombiner N-5
N.2.3 Plant-Wide Components–Hydrogen Tanks N-6
N.2.3.1 Jet Flame N-7

N.2.3.2 Storage Tank Explosion N-7
N.2.3.3 Jet Vapor Cloud Explosion N-8
N.2.4 Plant-Wide Components–Miscellaneous Hydrogen Fires N-9
N.2.4.1 Jet Flame N-10
N.2.4.2 Explosion Confined to the Compartment of Origin N-10
N.2.4.3 Multicompartment Explosion N-10
N.3 Modeling Hydrogen Fire and Explosion N-10
N.3.1 Jet Flame N-11
N.3.2 Release Rate from a Pressurized Source N-11
N.3.3 Vapor Cloud Explosion N-12
N.4 References N-13

***O* APPENDIX FOR CHAPTER 11, TURBINE GENERATOR FIRES O-1**
O.1 Fire Events Involving Turbine-Generator System O-1
O.2 Modeling Fires Involving Turbine-Generators O-4
O.2.1 Excitor Fires O-4
O.2.2 Hydrogen Fires O-4
O.2.3 Oil Fires O-4
O.2.4 Catastrophic Fires Involving T/G System O-6
O.3 References O-6

***P* APPENDIX FOR CHAPTER 11, DETECTION AND SUPPRESSION ANALYSIS P-1**
P.1 Calculating the Probability of No Suppression P-1
P.1.1 Identification of Fire Protection Features P-2
P.1.2 Effectiveness of Fire Detection and Suppression Systems P-2
P.1.3 Solving the Detection-Suppression Event Tree P-3
P.1.4 Using the Manual Suppression Probability Curves P-8
P.1.5 Additional Information on Recommended Probability Values P-10
P.1.6 Dependency Analysis P-12
P.1.7 The Probability of No Suppression P-13
P.2 Example P-14
P.3 References P-14

***Q* APPENDIX FOR CHAPTER 11, PASSIVE FIRE PROTECTION FEATURES Q-1**
Q.1 Analytical Modeling of Passive Fire Protection Features Q-1

Q.2 Empirical Modeling of Passive Fire Protection Features Q-2
Q.2.1 Coatings Q-2
Q.2.2 Cable Tray Barriers and Fire Stops Q-4
Q.3 Probabilistic Modeling of Passive Fire Protection Features Q-4
Q.3.1 Dampers Q-4
Q.3.2 Penetration Seals Q-5

***R* APPENDIX FOR CHAPTER 11, CABLE FIRES R-1**
R.1 Background Information R-1
R.2 Cable Tray Ignition R-2
R.3 Heat Release Rate from Cable Tray Fires R-3
R.4 Flame Spread and Fire Propagation R-4
R.4.1 Flame Spread R-4
R.4.1.1 Material Properties R-5
R.4.1.2 Recommended Values R-5
R.4.2 Fire Propagation R-6
R.4.2.1 Heat Release Rate R-7
R.4.2.2 Timing R-8
R.5 References R-8

***S* APPENDIX FOR CHAPTER 11, FIRE PROPAGATION TO ADJACENT CABINETS S-1**
S.1 Fire Propagation to Adjacent Cabinets S-1
S.2 Damage to Adjacent Cabinets S-2

***T* APPENDIX FOR CHAPTER 11, SMOKE DAMAGE T-1**
T.1 Introduction T-1
T.1.1 Contact Fouling T-2
T.1.2 Binding of Mechanical Movement T-3
T.1.2.1 Relays T-3
T.1.2.2 Strip Chart Recorders T-4
T.1.2.3 Dial Meters T-4
T.1.2.4 Hard Disk Drive Units T-5
T.1.2.5 Summary of Insights for Binding Mechanical Movement T-5
T.1.2.6 Risk Implications of Mechanical Binding Damage Mode T-7
T.2 Summary of Findings T-7

T.2.1 Failure Modes and Component Vulnerability T-7
T.2.1.1 Circuit Bridging T-8
T.2.1.1.1 Damage Mechanism T-8
T.2.1.1.2 Vulnerable Components T-8
T.2.1.1.3 Risk Implications T-8
T.2.1.1.4 Potential Risk Significance T-9
T.2.1.2 Contact Fouling T-9
T.2.1.2.1 Damage Mechanism T-9
T.2.1.2.2 Vulnerable Components T-9
T.2.1.2.3 Risk Implications T-9
T.2.1.2.4 Overall Risk Significance T-9
T.2.1.3 Binding of Mechanical Movement T-9
T.2.1.3.1 Damage Mechanism T-9
T.2.1.3.2 Vulnerable Components T-9
T.2.1.3.3 Potential Risk Implications T-10
T.2.1.3.4 Overall Risk Significance T-10
T.2.1.4 Direct Chemical/Corrosive Attack T-10
T.2.1.4.1 Damage Mechanism T-10
T.2.1.4.2 Vulnerable Components T-10
T.2.1.4.3 Risk Implications T-10
T.2.1.4.4 Overall Risk Significance T-10
T.2.2 Findings Associated with PRA Modeling of Smoke Damage T-10
T.2.2.1 High Voltage Components T-11
T.2.2.1.1 Damage Thresholds T-11
T.2.2.1.2 Screening Analyses T-11
T.2.2.1.3 Risk Quantification T-12
T.2.2.2 Lower-Voltage Instrumentation and Control Devices T-12
T.2.2.2.1 Damage Thresholds T-12
T.2.2.2.2 Screening Analyses T-12
T.2.2.2.3 Risk Quantification T-12
T.3 A PRA Framework for Smoke Damage T-13
T.3.1 Practices Supported by the Current State of the Art T-13
T.4 References T-14

_U_ APPENDIX FOR CHAPTER 15, UNCERTAINTY ANALYSIS–TECHNICAL BASES U-1

U.1 Background U-1
U.2 Types of Uncertainties: Aleatory and Epistemic U-2
U.3 Uncertainty Analysis in PRA U-3
U.4 Uncertainties in the Integrated Fire Analysis U-4
U.5 References U-5

V APPENDIX FOR CHAPTER 15, DISCUSSION OF INDIVIDUAL TASK UNCERTAINTIES V-1
V.1 Summary of Task Uncertainties and Suggested Treatment V-1
V.1.1 Task 1–Plant Boundary Definition and Partitioning V-1
V.1.1.1 Uncertainty Issues V-1
V.1.1.2 Suggested Strategy V-1
V.1.2 Task 2–Fire PRA Components Selection V-1
V.1.2.1 Uncertainty Issues V-1
V.1.2.1 Suggested Strategy: V-2
V.1.3 Task 3–Fire PRA Cable Selection V-2
V.1.3.1 Uncertainty Issues V-2
V.1.3.2 Suggested Strategy V-3
V.1.4 Task 4–Qualitative Screening V-3
V.1.4.1 Uncertainty Issues V-3
V.1.4.2 Suggested Strategy V-4
V.1.5 Task 5–Fire-Induced Risk Model V-4
V.1.5.1 Uncertainty Issues V-4
V.1.5.2 Suggested Strategy V-4
V.1.6 Task 6–Fire-Ignition Frequency V-5
V.1.6.1 Uncertainty Issues V-5
V.1.6.2 Suggested Strategy V-5
V.1.7 Task 7–Quantitative Screening V-6
V.1.7.1 Uncertainty Issues V-6
V.1.7.2 Suggested Strategy V-6
V.1.8 Task 8–Scoping Fire Model V-6
V.1.8.1 Uncertainty Issues V-6
V.1.8.2 Suggested Strategy V-7
V.1.9 Task 9–Detailed Circuit Failure Analysis V-7
V.1.9.1 Uncertainty Issues V-7

V.1.9.2 Suggested Strategy V-7
V.1.10 Task 10–Circuit Failure Mode Likelihood Analysis V-7
V.1.10.1 Uncertainty Issues V-7
V.1.10.2 Suggested Strategy V-8
V.1.11 Task 11–Detailed Fire Modeling V-8
V.1.11.1 Uncertainty Issues V-8
V.1.11.2 Suggested Strategy V-9
V.1.12 Task 12–Post-Fire Human Reliability Analysis V-9
V.1.12.1 Uncertainty Issues V-9
V.1.12.2 Suggested Strategy V-9
V.1.13 Task 13–Seismic-Fire Interactions V-10
V.1.13.1 Uncertainty Issues V-10
V.1.13.2 Suggested Strategy V-10
V.1.14 Task 14–Fire Risk Quantification V-10
V.1.15 Task 15–Uncertainty and Sensitivity Analysis V-10
V.1.16 Task 16–Fire PRA Documentation V-10
V.2 Role of Sensitivity Analyses V-10

***W* APPENDIX FOR CHAPTER 18, SAMPLE FIRE PRA DATABASE STRUCTURE W-1**
W.1 Database Structure and Relationships W-1
W.2 Source Data Table Constraints and Data Integrity Logical Requirements W-3
W.3 Data Integrity Rules and Logical Constraints W-5
W.4 Mapping Data Fields to Task Activities W-6

LIST OF FIGURES

Figure 1 Overview of the Fire PRA Process xliv
Figure 3-1 Fire PRA Cable Selection Process 3-3
Figure 5-1 Illustration of a FEP Response Model 5-5
Figure 9-1 Detailed Circuit Failure Analysis Work Flow 9-3
Figure 10-1 Circuit Failure Mode Likelihood Analysis Work Flow 10-2
Figure 11-1 General AnalysisFlow Chart for Task 11–Detailed Fire Modeling11.3.4 Fire Growth and Spread Analysis 11-4
Figure 18-1 Fire PRA Database Structure–Equipment and Cables 18-3
Figure B-1 Example Cable Block Diagrams B-2
Figure E-1 Severity Factor Estimation Process E-2
Figure F-1 Walkdown and Severity Factor Calculation Form F-2
Figure F-2 Fire ZOI. d_p: Critical Distance for Targets in the Plume, d_{pr}: Radius of the Plume at the Critical Distance, d_f: Flame Height, d_{cj}: Critical Distance for Targets in the Ceiling Jet, d_r: Critical Distance for Targets Subjected to Flame Radiation F-5
Figure F-3 Fire Zone of Influence Form. Predetermined Values are Based on Listed Input Parameters. Analysts Should Verify that Inputs are Applicable to the Compartment Under Study F-6
Figure G-1 Heat Release Rate Profile G-2
Figure G-2 4.16 kV Switchgear (Front) G-25
Figure G-3 Front Panel (Open) G-26
Figure G-4 Front Panel (Open) G-26
Figure G-5 Rear Panel G-27
Figure G-6 480 V Switchgear (Front) G-27
Figure G-7 480 V Switchgear (Open) G-28
Figure G-8 Distribution Panel (Front) G-28
Figure G-9 Distribution Panel (Front) G-29
Figure G-10 480 V Switchgear (Front) G-30
Figure G-11 Rear Panel G-30
Figure G-12 Rear Panel G-31
Figure G-13 Rear Panel G-31
Figure G-14 Distribution Panel (Front) G-32
Figure G-15 Distribution Panel (Open) G-32
Figure G-16 Control Panel (Front) G-33

Figure G-17 Back of Front Panel G-34
Figure G-18 Rear Access to Control Panel G-34
Figure G-19 Back of Rear Face of Control Panel G-35
Figure G-20 Example of a Main Control Board G-35
Figure G-21 Relay Rack (Front) G-36
Figure G-22 Cable Bundles G-36
Figure I-1 Block Diagram for Typical SOV Circuit Analysis Example I-2
Figure I-2 Electrical Schematic for Typical SOV Circuit Analysis Example I-2
Figure I-3 Block Diagram for Typical MOV Circuit Analysis Example I-4
Figure I-4 Electrical Schematic for Typical MOV Circuit Analysis Example I-4
Figure I-5 Block Diagram for Double-Pole Isolation Circuit Example I-5
Figure I-6 Electrical Schematic for Double-Pole Isolation Circuit Example I-6
Figure I-7 Block Diagram for Ungrounded, Inverted MOV Control Circuit Example I-7
Figure I-8 Electrical Schematic for Ungrounded, Inverted MOV Control Circuit Example I-7
Figure I-9 Block Diagram for Ungrounded MOV Circuit Analysis Example I-8
Figure I-10 Electrical Schematic for Ungrounded MOV Circuit Analysis Example I-9
Figure I-11 Block Diagram for MOV with Independent Control Circuits Example I-10
Figure I-12 Electrical Schematic for MOV with Independent Control Circuits I-11
Figure K-1 Highlighted Block Diagram for Typical SOV Circuit Example K-2
Figure K-2 Electrical Schematic for Typical SOV Circuit Example K-2
Figure K-3 Highlighted Block Diagram for Typical MOV Circuit Example K-5
Figure K-4 Electrical Schematic for Typical MOV Circuit Example K-6
Figure K-5 Highlighted Block Diagram for Double-Pole Isolation Circuit Example K-9
Figure K-6 Electrical Schematic for Double-Pole-Isolation Circuit Example K-9
Figure K-7 Highlighted Block Diagram for Ungrounded, Inverted MOV Example K-12
Figure K-8 Electrical Schematic for Ungrounded, Inverted MOV Example K-12
Figure K-9 Highlighted Block Diagram for Ungrounded MOV Circuit Analysis Example K-16
Figure K-10 Electrical Schematic for Ungrounded MOV Circuit Analysis Example K-17
Figure K-11 Highlighted Block Diagram for MOV with Independent Control Circuits Example K-18
Figure K-12 Electrical Schematic for MOV with Independent Control Circuits K-19
Figure L-1 Likelihood of Target Damage Calculated as the Severity Factor Times the Probability of Nonsuppression for MCB Fires L-4
Figure L-2 A Representation of the Front of a Control Panel with Two Target Elements L-5
Figure L-3 Heat Release Rate Profile L-7
Figure M-1 ZOI for the Energetic Phase of a HEAF M-14
Figure P-1 Detection Suppression Event Tree NS – Failure of suppression activities OK – Success of suppression activities P-4
Figure P-2 Summary of Suppression Curves P-10

Figure P-3 Summary of Suppression Curves P-11
Figure P-4 Solution of the Detection-Suppression Event Tree for Example in Section P-2
NS – Failure of suppression activities OK – Success of suppression activities P-15
Figure R-1 Ignition Evaluation of a Cable Tray Stack R-2
Figure R-2 Ignition Evaluation of a Cable Tray Stack in the Ceiling Jet R-2
Figure R-3 Ignition Evaluation of Adjacent Cable Trays R-3
Figure R-4 Model for Fire Propagation in a Cable Tray Stack R-7
Figure W-1 Fire PRA Database Structure–Equipment and Cables W-2
Figure W-2 Fire PRA Database Structure–Compartment, Areas, and Fire Protection W-3

LIST OF TABLES

Table 2-1 Illustration of Accident Sequence Types to be Included/Excluded in the Fire PRA 2-7
Table 2-2 Illustrations of Spurious Actuation (Single and Multiple) of Electrical-Operated Equipment Using the Internal Events PRA Model 2-15
Table 5-1 Summary of Methods for Addressing Fire-Induced Equipment Failures 5-7
Table 6-1 Fire Frequency Bins and Generic Frequencies 6-3
Table 6-2 Generic Plant Location Descriptions and Weighting Factor W_L 6-11
Table 6-3 Description of Transient Fire Influencing Factors 6-20
Table 7-1 Quantitative Screening–Summary of Inputs and Outputs 7-5
Table 7-2 Quantitative Screening Criteria for Single Fire Compartment Analysis 7-8
Table 7-3 Quantitative Screening Criteria for All Screened Fire Compartments 7-9
Table 8-1 Zone of Influence and Severity Factor Recommendations 8-4
Table 8-2 Damage Criteria for Cables 8-10
Table 10-1 Failure Mode Probability Estimates Given Cable Damage 10-7
Table 11-1 Recommended Severity Factors and Suppression Curves for Ignition Sources in the Frequency Model 11-9
Table 11-2 Appendices Providing Additional Instructions on Technical Issues in Selecting, Characterizing, and Analyzing Physical Fire Scenarios 11-12
Table 11-3 Barrier Types and Their Failure Probabilities 11-45
Table 16-1 Suggested Outline for Fire PRA Documentation (Main Fire PRA Report) 16-2
Table 16-2 Suggested Outline for Fire PRA Documentation (Fire PRA Supporting Documents) 16-4
Table 17-1 Fire Risk Walkdowns 17-4
Table 17-2 Fire Risk Tasks and Walkdown Needs 17-6
Table B-1 Example Fire PRA Cable Data B-2
Table B-2 Example Target Equipment Location Reports B-4
Table B-3 Example Equipment Location Vulnerability Summary Report B-5
Table C-1 Summary of Prior Distributions used in RDAT C-4
Table C-2 Fire Event Classifications and Frequency Estimation Action C-11
Table C-3 Generic Fire Ignition Frequency Model for U.S. Nuclear Power Plants C-13
Table E-1 List of Heat Release Rate Distributions E-3
Table E-2 Discretized Distribution for Case 1 Heat Release Rate (Vertical Cabinets with Qualified Cable, Fire Limited to One Cable Bundle) E-3

Table E-3 Discretized Distribution for Case 2 Heat Release Rate (Vertical Cabinets with Qualified Cable, Fire in more than One Cable Bundle) E-4
Table E-4 Discretized Distribution for Case 3 Heat Release Rate (Vertical Cabinets with Unqualified Cable, Fire Limited to One Cable Bundle) E-5
Table E-5 Discretized Distribution for Case 4 Heat Release Rate (Vertical Cabinets with Unqualified Cable, Fire in more than One Cable Bundle Closed Doors) E-6
Table E-6 Discretized Distribution for Case 5 Heat Release Rate (Vertical Cabinets with Unqualified Cable, Fire in more than One Cable Bundle Open Doors) E-7
Table E-7 Discretized Distribution for Case 6 Heat Release Rate (Pumps – Electrical Fires) E-8
Table E-8 Discretized Distribution for Case 7 Heat Release Rate (Motors) E-9
Table E-9 Discretized Distribution for Case 8 Heat Release Rate (Transients) E-10
Table F-1 Probability Distributions for Heat Release Rates F-3
Table G-1 Recommended HRR Values for Electrical Fires G-5
Table G-2 Recommended HRR Values for Electrical Fires G-6
Table G-3 Typical Electrical Cabinet Openings and Penetrations G-8
Table G-4 Flammability Properties for Selected Combustibles G-9
Table G-5 Information for Pressurized Oil Fires G-11
Table G-6 Summary of Electrical Cabinet Experiments Reported in NUREG 4527 ..... G-13
Table G-7 Transient Ignition Sources G-17
Table G-8 Properties of Selected Materials. Revision of Table 2 in ERPI TR-100443 ..... G-24
Table H-1 Damage Criteria for Electrical Cables – Generic Screening Criteria for the Assessment of the Ignition and Damage Potential of Electrical Cables H-1
Table H-2 Cable Properties Decision Matrix for Mixed Cable Insulation/Jacket Configurations H-2
Table H-3 Summary of General Material Specific Cable Thermal Damage Criteria as Reported in Table 6 of Reference H.2 ..... H-5
Table H-4 Failure Temperatures for Specific Cable Products as Reported in Table 5 of Reference H.2 ..... H-5
Table I-1 SOV Failure List I-3
Table I-2 MOV Failure List I-5
Table I-3 Double-Pole Isolated Motor Failure List I-6
Table I-4 Ungrounded, Inverted MOV Failure List I-8
Table I-5 Ungrounded MOV Failure List I-10
Table I-6 MOV with Independent Control Circuits Failure List I-12
Table J-1 P_{CC} Probability Factors J-4
Table J-2 CCF Adjustment Factors J-6
Table K-1 SOV Cable B Failure Response Probabilities K-3
Table K-2 MOV Cable A Failure Response Probabilities K-6
Table K-3 Double-Pole Isolated Motor Failure Response Probabilities (Cables A and B) K-10
Table K-4 Ungrounded, Inverted MOV Failure Response Probabilities K-15

Table K-5 Ungrounded MOV Failure Response (SO) Probabilities K-18
Table K-6 MOV with Independent Control Circuits Failure Response (SO) Probabilities K-21
Table M-1 Summary of the High-Energy Arcing Faults for Switchgears and Load Centers in the U.S. Nuclear Power Industry: 1979 through 2001 ..... M-4
Table N-1 Some Properties of Hydrogen (Gleaned from [N-2 through N-4]) N-2
Table N-2 Fire Ignition Frequencies, From Task 6 ..... N-5
Table N-3 Damage Characterization from Explosion Overpressure N-12
Table O-1 Major Fires Involving T/G System in U.S. and International NPPs O-2
Table O-2 Fire Categories, Severity Level, and Conditional Probability O-5
Table P-1 Event Tree Outputs P-3
Table P-2 Probability Distribution for Rate of Fires Suppressed per Unit Time, λ P-8
Table P-3 Numerical Results for Suppression Curves P-9
Table P-4 Unreliability of Fixed Fire Suppression Systems P-10
Table Q-1 Summary of Principal Two-Tray Diesel Fuel Fire Cable Fire. Retardant Coatings Tests Involving Nonrated 3-Conductor Cables Q-3
Table R-1 Bench Scale HRR Values, q_{bs} R-4
Table W-1 Fire-PRA Database Lookup Table Options W-4

REPORT SUMMARY

This report documents state-of-the-art methods, tools, and data for a fire probabilistic risk assessment (PRA) for a commercial nuclear power plant (NPP) application. The methods have been developed under the Fire Risk Re-Qualification Study. This study was conducted jointly by EPRI and the United States Nuclear Regulatory Commission (NRC) Office of Nuclear Regulatory Research (RES) under the terms of an EPRI/RES Memorandum of Understanding and an accompanying Fire Research Addendum. Industry participants supported demonstration analyses and provided peer review of this methodology. The documented methods are intended to support future applications of fire PRA, including risk-informed regulatory applications.

Background

This document is aimed primarily at practitioners actually conducting NPP fire PRA analysis. A fire PRA requires a team effort because no single individual can bring the full range of expertise and knowledge necessary to complete the analysis.

This report assumes that the fire risk analysis team will include individuals with expertise in four key areas: (1) fire analysis (basic fire behavior, fire modeling, fire protection engineering, and plant fire protection regulatory compliance practices and documentation); (2) general PRA and plant systems analysis (event tree/fault tree analysis, NPP systems modeling, reliability analysis, PRA practices as applied in the internal events domain, and specific knowledge of the plant under analysis); (3) human reliability analysis, or HRA (emergency preparedness, plant operations and plant-specific safe shutdown [SSD] procedures, and operations staff training practices); and (4) electrical analysis (circuit failure modes and effects analysis and post-fire SSD, including plant-specific regulatory compliance strategies and documentation). Much of this expertise is specific to the plant under analysis while others are generic.

The method documented in this report represents the current state-of-the-art in the fire PRA practice. Certain aspects of PRA analysis continue to evolve and likely will see additional developments in the near future. Such developments should be easily captured within the overall analysis framework described here. That is, while specific aspects of the analysis process will likely evolve, the overall analysis framework represents a stable and well-proven analysis platform and should not be subject to fundamental changes in the foreseeable future. Hence, these methods should represent a stable a basis for proceeding with risk-informed regulatory approaches to fire protection regulatory compliance.

Objectives

To consolidate recent research and development activities into a single state-of-the-art fire PRA analysis methodology and to serve the needs of a fire risk analysis team by providing a structured framework for the overall analysis, as well as specific recommended practices to address each key aspect of the analysis.

Approach

Developing this methodology document involved a consensus process designed to fully debate and bring closure to past methodological issues. Two technical development teams were assembled, one by EPRI and the second by RES. Each team provided a full complement of experts covering all aspects of the analysis. These experts worked together to develop an overall analysis framework and specific instructions for each key aspect of the analysis.

Technical debates were aired in sometimes-lively discussions. The technical exchange process was designed to seek consensus where possible. However, the process also allowed RES and EPRI to maintain differing technical views in cases where consensus could not be reached. In practice, this did not prove necessary. The documented methods do, in all cases, represent a consensus view of the two technical development teams.

Another key aspect of the project was participation of the commercial nuclear power industry in its review, demonstration, and, to a lesser extent, development of the recommended methods. An industry peer-review panel was formed from the six non-pilot utility participants in this program. Two NPPs participated as pilot plants and supported demonstration studies conducted jointly by the EPRI and RES technical development teams. A third NPP participated as an independent pilot plant, exercising the proposed methods independently and providing feedback to the technical development teams.

Results

The documented method reflects state-of-the-art fire risk analysis approaches. Methodological issues raised in past fire risk analyses, including individual plant examination of external events (IPEEE) fire analyses, have been addressed to the extent allowed by current state-of-the-art and overall project scope. Methodological debates were resolved through a consensus process between experts representing both EPRI and RES. The consensus process included a provision allowing each major party (EPRI and RES) to maintain differing technical positions if consensus could not be reached. No cases were encountered where this provision was invoked. While the primary objective of the project was to consolidate existing state-of-the-art methods, in many areas the newly documented methods represent a significant advance over previously documented methods. In several areas, this project has, in fact, developed new methods and approaches. Such advances typically relate to areas of past methodological debate.

EPRI Perspective

This report provides the single most complete and comprehensive methodology for a fire PRA to date. Two aspects of the approaches are especially unique. First, the methodology has been developed based on a consensus process involving both EPRI and RES. Second, the methods specifically address and resolve previously identified methodological issues.

Keywords

Fire Fire risk Risk Analysis Probabilistic risk assessment, PRA
Probabilistic safety assessment, PSA Risk-informed regulation Performance-based
Fire protection Fire safety Nuclear power plant

PREFACE

This report is presented in two volumes. Volume 1, the Executive Summary, provides general background and overview information including both programmatic and technical, and project insights and conclusions.

Volume 2 provides the detailed discussion of the recommended approach, methods, data and tools for conduct of a Fire PRA. This information is structured in 18 chapters that describe each of the project technical tasks as they are shown in Figure 1. Each chapter contains the following information.

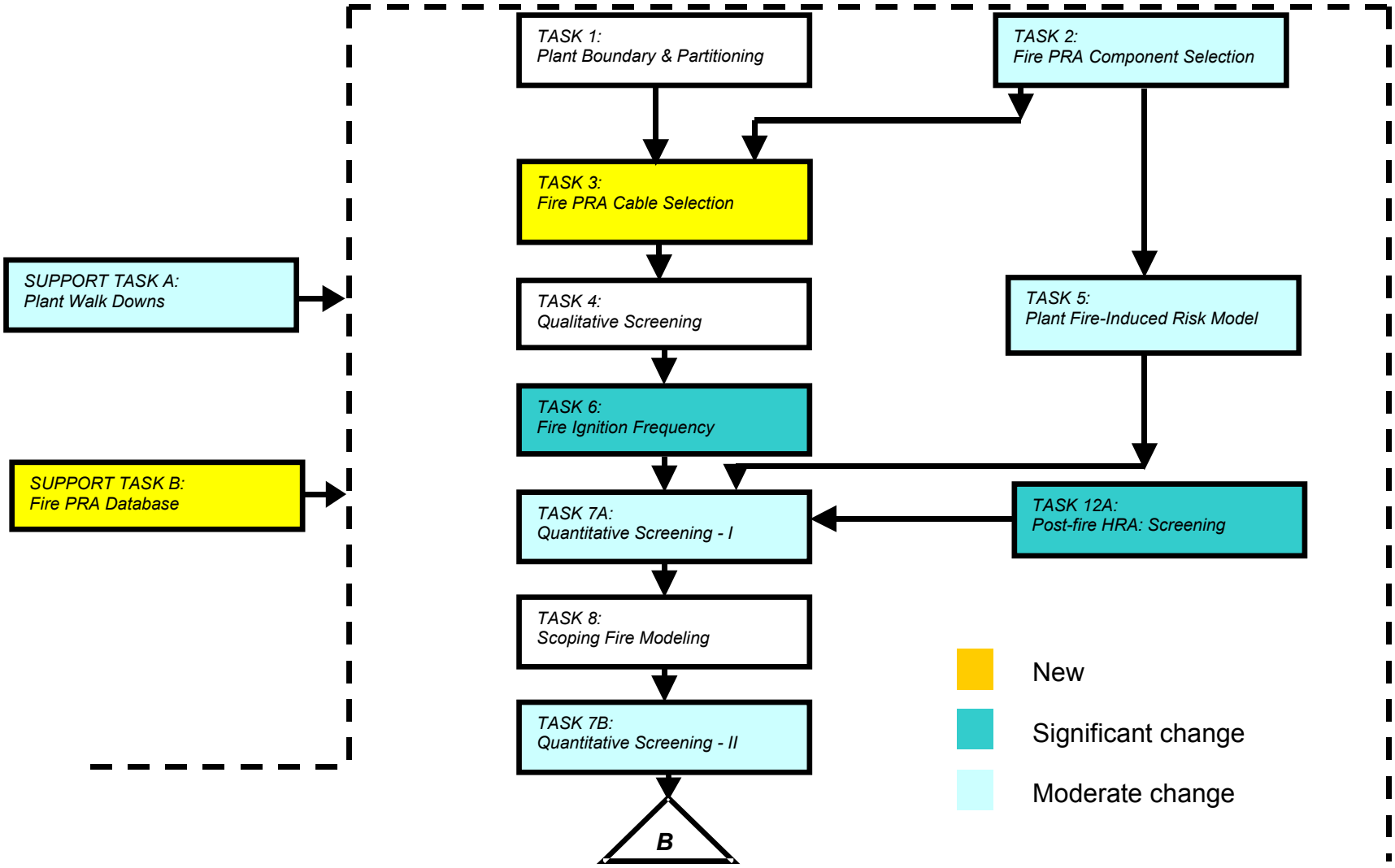

Figure 1
Overview of the Fire PRA Process

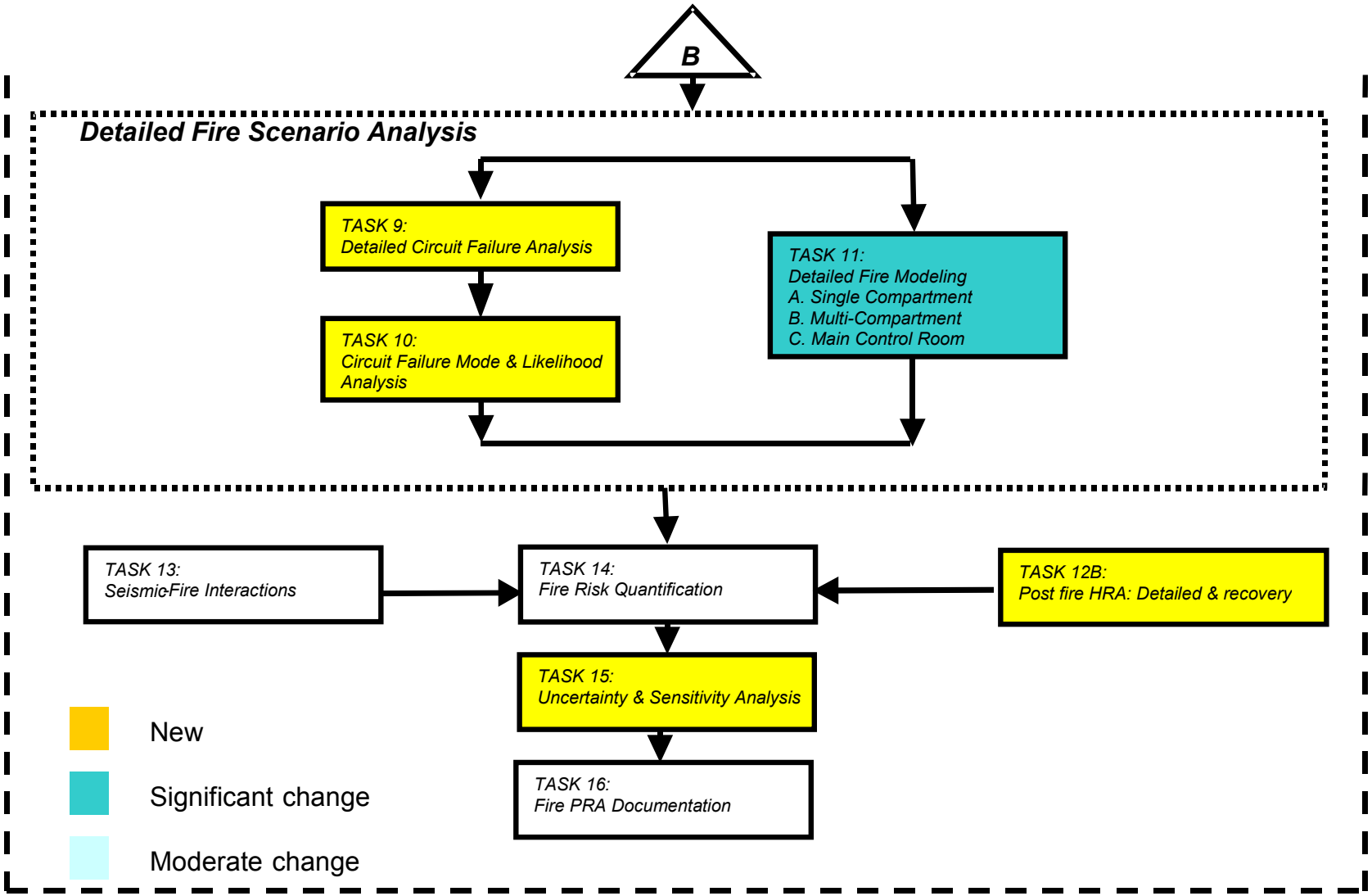

Figure 1
Overview of the Fire PRA Process (Continued)

Section 1. Purpose – This section is a short description of what is the task intended to develop.

Section 2. Scope – This contains a description of the scope of each task.

Section 3. Background Information – This is a short description intended for the user to understand, what is expected to be performed as part of this task and why, what are the relevant technical issues and if an how they are to be addressed. It is intended that this would reduce inappropriate use of the methods and data. This section also, describes assumptions specific to the task.

Section 4. Interfaces – This section contains description of the interfaces between this and other technical tasks. This information is intended to ensure that appropriate input, from other tasks, is used and appropriate results, as necessary by other task, is generated.

Section 5. Procedure – This section provides the detailed description of steps to develop the task outputs.

Section 6. Uncertainty – This section is a discussion of uncertainties contributing to the technical task. This is intended to identify sources of uncertainty with some thoughts on how they can or may be addressed.

Section 7. References – The reference for each technical task are listed at the end of each chapter.

Appendices. Technical bases, special models, generic data, or other information are organized by task. These appear at the end of appropriate task chapter.

FOREWORD

Fire risk analysis (FRA) methods have been used in the Individual Plant Examinations of External Event (IPEEE) program to facilitate a nuclear power plant examination for vulnerabilities. However, in order to make finer, more realistic decisions for risk-informed regulation, FRA methods needed to be improved. Licensee applications and U.S. Nuclear Regulatory Commission (NRC) review guidance with respect to many regulatory activities such as the risk-informed, performance-based fire protection rulemaking (endorsing National Fire Protection Association Standard 805) will benefit from more robust FRA methods. In order to address the need for improved methods, the NRC Office of Nuclear Regulatory Research (RES) and Electric Power Research Institute (EPRI) embarked upon a program to develop state-of-art FRA methodology.

Under a joint Memorandum of Understanding, RES and EPRI initiated a collaborative, results-oriented research program, the Fire Risk Re-quantification Study, with the primary objective to develop improved methodology for conducting FRA for a nuclear power plant.

These studies address the full breadth of FRA technical issues for power operations, and include consideration of large early release frequency. The current scope excludes low power/shutdown operations, spent fuel pool accidents, sabotage, and PRA Level 3 estimates of consequence.

Both RES and EPRI have provided specialists in fire risk analysis, fire modeling, electrical engineering, human reliability analysis, and systems engineering for methods development. These improved methods have been applied at pilot plant FRAs to test their viability and effectiveness. Also, the associated procedures have been assessed for technical basis, practicality, and scope by technical review panels comprised of industry participants.

A formal technical issue resolution process was developed to direct the deliberative process between RES and EPRI. The process ensures that divergent technical views are fully considered, yet encourages consensus at many points during the deliberation. Significantly, the process provides that each party maintain its own point of view if consensus is not reached. Consensus was reached on all technical issues documented in this report.

The methodology documented in this report reflects the current state-of-the-art in FRA. These methods are expected to form a basis for risk-informed analyses related to the plant fire protection program. However, such analyses rely upon an evaluation of the condition of fire protection systems and structures which is beyond this methodology, and may need interpretations of this methodology as well.

This document does not constitute regulatory requirements. RES participation in this study does not constitute or imply regulatory approval of applications based upon this methodology.

ACKNOWLEDGMENTS

This work benefited from contributions and considerable technical support from Dominion, American Electric Power, Pacific Gas & Electric, Duke Power, Exelon Corporation, Florida Power & Light, Southern California Edison, Nuclear Management Corporation, and the CANDU Owners Group.

The methodology developed was tested at three nuclear facilities in the U.S. The authors would like to extend their gratitude to the staff of these facilities for their support and for sharing their insights gained from use of the methodology. The process benefited significantly from their input.

John Spaargaren (Dominion, Millstone)
Paul Raimondi (Dominion, Millstone)
Joseph Mangeno (Dominion, Millstone)
Fred Ceitek (Dominion, Millstone)
Rasool Baradaran (AEP, DC Cook)
Richard Gray (AEP, DC Cook)
Amir Afzali (PG&E, Diablo Canyon)
Clarence Worrell (PG&E, Diablo Canyon)

The following individuals served on a peer review team that provided review and comments on the interim and final report of this project.

Dennis Henneke (Duke Power)
Christopher Pragman (Exelon Corp.)
Ching Guey (Florida Power & Light)
Sam Chien and Parviz Moini (Southern California Edison)
Robert Ladd (NMC – Point Beach)
Keith Dinnie (CANDU Owners Group, COG)

The authors would like to extend particular gratitude to Dennis Henneke of Duke Power and Chris Pragman of Exelon Corp. for their tireless review of multiple revisions of the task procedures. Their efforts contributed substantially to the quality and completeness of the final product.

The authors would also like to acknowledge the technical contributions of Professor Ali Mosleh (University of Maryland) in the development of the fire ignition frequency and uncertainty methods and Dennis Bley (Buttonwood Consulting Inc.) in the development of the post-fire human reliability analysis approach.

LIST OF ACRONYMS

ACB	Air-cooled Circuit Breaker
ACRS	Advisory Committee on Reactor Safeguard
AEP	Abnormal Event Procedure
AFW	Auxiliary Feedwater
AGS	Assistance General Supervisor
AOP	Abnormal Operating Procedure
ATWS	Anticipated Transient Without Scram
BNL	Brookhaven National Laboratory
BWR	Boiling Water Reactor
CCDP	Conditional Core Damage Probability
CCF	Cable Configuration Factors
CCPS	Center for Chemical Process Safety
CCW	Component Cooling Water
CDR	Core Damage Frequency
CFD	Computational Fluid Dynamics
CLERP	Conditional Large Early Release Probability
CM	Corrective Maintenance
CR	Control Room
CRS	Cable and Raceway System

CWP	Circulating Water Pump
EDG	Emergency Diesel Generator
EF	Error Factor
EI	Erroneous Status Indicator
EOP	Emergency Operating Procedure
EPRI	Electronic Power Research Institute
FEDB	Fire Events Database
FEP	Fire Emergency Procedure
FHA	Fire Hazards Analysis
FIVE	Fire-Induced Vulnerability Evaluation (EPRI TR 100370)
FMRC	Factory Mutual Research Corporation
FPRAIG	Fire PRA Implementation Guide (EPRI TR 105928)
FRSS	Fire Risk Scoping Study
FSAR	Final Safety Analysis Report
HEAF	High Energy Arcing Fault
HEP	Human Error Probability
HFE	Human Failure Event
HPI	High Pressure Injection
HPCI	High Pressure Coolant Injection
HRA	Human Reliability Analysis
HRR	Heat Release Rate
HTGR	High Temperature Gas-cooled Reactor
HVAC	Heating, Ventilation, and Air Conditioning
ICDP	Incremental Core Damage Probability

ILERP	Incremental Large Early Release Probability
INPO	Institute for Nuclear Power Operations
IPE	Individual Plant Examination
IPEEE	Individual Plant Examination for External Events
IS	Ignition Source
ISLOCA	Interfacing Systems Loss of Coolant Accident
KS	Key Switch
LCO	Limiting Condition of Operation
LERF	Large Early Release Frequency
LFL	Lower Flammability Limit
LOC	Loss of Control
LOCA	Loss of Coolant Accident
LPG	Liquefied Petroleum Gas
LWGR	Light-Water-cooled Graphite Reactors (Russian design)
MCC	Motor Control Center
MCR	Main Control Room
MG	Motor-Generator
MFW	Main Feedwater
MOV	Motor Operated Valve
MQH	McCaffrey, Quintiere and Harkleroad's Method
MS	Main Steam
NC	No Consequence
NEI	Nuclear Energy Institute
NEIL	Nuclear Electric Insurance Limited

NFPA	National Fire Protection Association
NPP	Nuclear Power Plant
NPSH	Net Positive Suction Head
NQ cable	Non-Qualified (IEEE-383) cable
NRC	Nuclear Regulatory Commission
P&ID	Piping and Instrumentation Diagram
PE	Polyethylene
PM	Preventive Maintenance
PMMA	Polymethyl Methacrylate
PORV	Power Operated Relief Valve
PRA	Probabilistic Risk Assessment
PSF	Performance Shaping Factor
PTS	Pressurized Thermal Shock
PVC	Polyvinyl Chloride
PWR	Pressurized Water Reactor
Q cable	Qualified (IEEE-383) cable
RBMK	Reactor Bolshoy Moshchnosty Kanalny (high-power channel reactor)
RCIC	Reactor Core Isolation Cooling
RCP	Reactor Coolant Pump
RCS	Reactor Coolant System
RDAT	Computer program for Bayesian analysis
RHR	Residual Heat Removal
RPS	Reactor Protection System
RWST	Refueling Water Storage Tank

SCBA	Self-Contained Breathing Apparatus
SDP	Significance Determination Process
SGTR	Steam Generator Tube Rupture
SI	Safety Injection
SMA	Seismic Margin Assessment
SO	Spurious Operation
SOV	Solenoid Operated Valve
SRV	Safety Relief Valve
SSD	Safe Shutdown
SSEL	Safe Shutdown Equipment List
SUT	Start-up Transformer
T/G	Turbine/Generator
TGB	Turbine-Generator Building
TSP	Transfer Switch Panel
UAT	Unit Auxiliary Transformer
VCT	Volume Control Tank
VTT	Valtion Teknillinen Tutkimuskeskus (Technical Research Centre of Finland)
VVER	The Soviet (and now, Russian Federation) designation for light water pressurized reactor
ZOI	Zone of Influence

1
PLANT BOUNDARY DEFINITION AND PARTITIONING (TASK 1)

1.1 Purpose

For the purposes of a Fire Probabilistic Risk Assessment (PRA) analysis, the plant is divided into a number of fire compartments. The analysis then considers the impact of fires in a given compartment, and fires that might impact multiple compartments. This procedure establishes the process for defining the global plant analysis boundary and partitioning of the plant into fire compartments. The product of this task will be a list of plant fire compartments in the nuclear power plant under analysis.

1.2 Scope

The work package developed to support the plant-partitioning task should address the following issues:

- Basis for and identification of the limits of the selected global plant boundary,
- Basis for and results of partitioning the selected global plant boundary into fire compartments,
- Mapping of fire compartments to plant fire areas defined in regulatory compliance activities, and
- Documentation of the basic features of some or all fire compartments.

1.3 Background Information

1.3.1 General Task Objectives and Approach

The objectives of the partitioning task are to (1) define the global plant analysis boundaries relevant to the Fire PRA, and (2) divide the plant into discrete physical analysis units (fire compartments). The fire compartments form the fundamental basis of the subsequent Fire PRA analysis. That is, the Fire PRA will consider fire threats to safe shutdown primarily in the context of the defined fire compartments. The results of the Fire PRA will be presented in terms of the risk contribution for fires confined to a single compartment and for fires that impact multiple adjacent compartments.

1.3.2 Assumptions

The partitioning task assumes that a range of fire protection features will be effective at containing the damaging effects of a fire under most fire conditions. These features include physical fire barriers, physical barriers that are not fire rated, active features, such as water curtains, and in some cases spatial separation. The potential failure of a credited partitioning feature is addressed in the multicompartment fire scenario analysis task (see Task 11).

1.3.3 Background Information

One of the most important effects of the plant partitioning process is in relation to the qualitative and quantitative screening tasks. Qualitative screening (Task 4) assesses each compartment, assuming that fires confined to that single compartment will fail all safe shutdown (SSD) components and cables in the compartment. Similar assumptions are made in the first quantitative screen (Task 7), and again, compartments are screened as individual contributors. Multicompartment scenarios are also explicitly screened and/or analyzed based on the compartment definitions, and in particular, postulating failure of the partitioning elements that define each compartment. Hence, the definition of fire compartments is critical to the analysis. It is important that fire compartments be defined in a reasonable manner that appropriately supports the fire PRA analysis.

The partitioning process involves two competing considerations that should be balanced by the analyst. Partitioning the plant into a greater number of compartments has potential advantages, in that each individual compartment may be easier to analyze as an individual risk contributor. This does, however, increase the burden for the analysis of multicompartment fire scenarios. Defining a smaller number of larger compartments also has advantages in certain cases, particularly for areas that the analyst expects might screen during qualitative screening (Task 4) or during initial quantitative screening (Task 7).

Ideally, the combination of individual compartment analyses and multicompartment analyses will reach the same final numerical estimates of the plant-wide fire risk, regardless of how the partitioning was performed. This will be accomplished since identification and analysis of multicompartment fire scenarios will begin with all fire compartments that are screened, qualitatively or quantitatively. In practice, an ideal consistency may be difficult to achieve and/or demonstrate. Furthermore, the partitioning decisions impact the presentation and interpretation of the fire PRA results in terms of single and multiroom fire scenario contributions. Excessive partitioning, beyond that recommended in Section 1.5.2, may appear to artificially dilute the contribution of a given room to fire risk, and should be avoided. When in doubt, retention of larger and more clearly delineated fire compartments is generally considered the more conservative approach.

1.4 Task Interfaces

1.4.1 Input from Other Tasks

No input from other activities in the fire PRA is necessary for the definition of the global plant boundary and partitioning of the plant into fire compartments.

1.4.2 Additional Plant Information Needed to Support this Task

In preparation for the partitioning task, the analyst should possess substantial knowledge of the plant layout, the characteristics of compartment boundary elements, and the general location of plant systems and equipment. For multiunit sites, a general knowledge of the extent to which systems, components, cables, and areas are shared between units is also needed.

Plan views of different buildings in the plant, as well as walkdowns, may be used to perform this task.

1.4.3 Walkdowns

Confirmatory walkdowns will be necessary to complete the partitioning process, although these walkdowns may be deferred pending the identification of walkdown needs associated with other analysis tasks (e.g., fire ignition frequency analysis and fire modeling tasks). Support Task A provides additional information about the recommended walkdown.

1.4.4 Outputs to Other Tasks

The list of fire compartments developed in this task is used throughout the balance of the fire PRA. The partitioning decisions made in this task define the physical plant analysis units–the fire compartments–that form the fundamental basis of the fire PRA analysis.

1.5 Procedure

1.5.1 Step 1: Selection of Global Plant Analysis Boundary

The partitioning task begins with a liberal definition of plant areas of potential interest to the fire PRA; the global plant boundaries. It is likely that various areas covered by this definition will actually contain no equipment of interest to the fire PRA. These areas will likely screen during qualitative screening (Task 4). For such areas, there is no benefit to be gained by additional partitioning of the area. For example, an administrative office building or warehouse within the protected boundary may be identified as a single fire compartment, even though there is extensive internal partitioning of the building. Such buildings will likely screen in total, and further partitioning of the building would not benefit the analysis.

The global plant analysis boundary should encompass all areas of the plant associated with both normal and emergency reactor operating and support systems, as well as power production (e.g., the turbine building). Note that for multiunit sites, the global plant analysis boundary should initially encompass all units. Some refinement of this decision may be appropriate in cases where sister units are physically and functionally separated (no shared areas, no shared systems, no shared components and associated cables, no conjoined areas) and where the analysis is limited to one unit. Upon confirmation of unit separation, the global analysis boundary might be reduced to encompass only the unit under analysis.

Selection of the global plant analysis boundary should begin with the protected areas of the plant. For most sites, this should be sufficient to capture the important fire risk contributors. However, a review should be performed to ensure that locations not included within the protected area could not contribute to fire risk. In particular, the plant analysis boundary should encompass all locations that house any of the fire PRA components and cables identified in Tasks 2 and 3 (Fire PRA Equipment Selection and Fire PRA Cable Selection, respectively).

1.5.2 Step 2: Plant Partitioning

The global plant analysis boundary defined in Step 1 should be divided into fire compartments using the definition of fire compartment. The process for defining fire compartments should start with existing plant partitioning as documented, for example, in regulatory compliance documents associated with the plant fire protection program. This information is generally documented in the plant Fire Hazards Analysis (FHA) or other equivalent compliance documentation, and will typically divide the plant into fire areas. The FHA may also identify fire zones within the fire areas. Partitioning decisions should not, however, be finalized until one or more confirmatory walkdowns have been performed.

As noted above, fire areas defined in a regulatory context should satisfy the criteria of fire compartments in the context of the fire PRA. However, care should be exercised in accepting fire zones as equivalent to fire compartments. Fire zones may be defined in the context of a fixed fire protection system, i.e., the zone of coverage. A fire zone may not satisfy the fire compartment partitioning criteria described above.

Where possible, the use of a consistent naming scheme for fire compartments with an existing fire area (or zone, if appropriate) names will facilitate plant familiarity with this new subdivision. That is, it is highly desirable to utilize the fire area (or zone) designations identified in fire protection program compliance efforts when designating fire compartments. For example, if “Fire Area 25” is partitioned into three fire compartments, a consistent naming scheme for these compartments, e.g., 25A, 25B, 25C, should be employed. If a fire compartment maps to a fire zone, the fire zone designations should be used. In all cases, fire compartments should be traceable to one (or more) plant fire area(s) or zone(s).

Upon completion of the partitioning task, no two partitioned volumes should overlap each other. That is, each location within the plant analysis boundary should map to exactly one fire compartment.

For multiunit sites, specific consideration of shared components, systems, and/or areas is needed. The final treatment of such issues may need some iteration on partitioning. For multiunit sites, one may be analyzing one or more units. In either case, for the purposes of initial partitioning, shared fire areas should be identified and partitioned, as well as other areas of the unit(s) being analyzed. Note that a shared fire area should not be partitioned based only on segregation of one unit's components from those of another unit.

If more than one unit is being analyzed, the shared compartments should be identified as being associated with each unit, as applicable. However, compartment definitions should be consistent between the two units for such shared areas. If only one unit is being analyzed, it may be appropriate to partition the balance of the sister unit(s) (e.g., those areas that are not shared) as a single compartment in anticipation of screening those areas during qualitative screening (Step 5).

To ensure completeness and to avoid double accounting, the partitioning process should comply with the following:

- The collection of defined fire compartments should cover all areas encompassed by the global plant analysis boundary (as defined below), and
- No two fire compartments should share the same space, i.e., each location within the global plant analysis boundary should map to one, and only one, fire compartment.

The definition of the global plant analysis boundary should be a relatively straightforward exercise. The intent is to define this boundary so that all locations with the potential to contribute visibly to fire risk are captured. Hence, the global plant analysis boundary is defined in a broadly inclusive manner. Unimportant areas within this boundary will be readily identified and eliminated from further analysis during the early screening tasks (e.g., Tasks 4 and 7).

However, in the effort to partition the plant into fire compartments, the analyst will encounter a wide range of field conditions and will address unique applications/needs with respect to the fire PRA. Definitive sets of partitioning criteria (i.e., rules for defining compartment boundaries) have not been found that can cover all potential field conditions and applications. The fire PRA analysis process is designed to minimize the level of effort spent on low fire risk areas of the plant and maximizes the level of detail used to analyze high-risk areas. Therefore, analyst judgment is necessary for plant partitioning.

The fire PRA process is facilitated if the compartments are defined to minimize the need for defining and analyzing multicompartment fires (i.e., damage to SSD components and cables in more than one compartment). This feature allows the analysis to focus primarily on individual fire compartments and minimizes the level of effort expended on identifying and analyzing multicompartment fire scenarios that may be risk significant.

As a starting point, the analyst should identify the fire areas defined in the context of the plant's regulatory compliance fire protection program. The fire area definitions used in regulatory compliance should readily satisfy the PRA fire compartment partitioning criteria. However, caution should be used in applying fire zone definitions as in other contexts. In particular, fire zones may be associated with the "zone of coverage" of a fire detection or suppression system, and these zones may not correspond to partitioning elements, i.e. fire compartments applicable to a fire PRA.

Individual fire areas can be retained in total as fire compartments without further partitioning. However, with proper justification, a fire area may be partitioned into two or more fire compartments. In some rare cases, it may also be advantageous to combine two or more fire areas into a single fire compartment, particularly if the combined compartment is expected to have a minimal risk contribution (e.g., it may screen at an early stage of the analysis).

As defined above, a fire compartment is a "well-defined volume within the plant … that is expected to substantially contain the adverse effects of fires within the compartment." The terms "well-defined volume" and "substantially contain" are obviously imprecise. It is the interpretation of these terms that needs the analyst's judgment.

In ideal terms, a well-defined volume would correspond to an enclosed room or to an area separated by permanent physical partitions. However, features other than permanent physical partitions may also be credited in partitioning (see further discussion below). Regardless of the partitioning elements credited, the defined compartment should represent a clearly distinguishable area of the plant. In general terms, "substantially contain" should be interpreted in the context of fire plume development, the development of a hot gas layer, direct radiant heating by the fire, and the actual spread of fire between contiguous or noncontiguous fuel elements. That is, a fire compartment should substantially contain these fire behaviors.

It is acknowledged and accepted that smoke from a fire may spread beyond a fire compartment. It is also acknowledged and accepted that the fire itself may spread beyond a fire compartment, given failure of credited partitioning feature (this behavior is treated in the multicompartment fire analysis). However, the credited partitioning features should assure that the spread of fire and damage to the adjacent compartments is highly unlikely, even if the fire is not promptly suppressed.

Partitioning features that would clearly meet the fire PRA partitioning criteria include the following.

- Any fire barrier with a minimum fire protection endurance rating of one hour can be credited in partitioning. This assumes that all elements of the fire barrier meet this minimum rating (e.g., doors, penetration seals, etc.).
- Any partition that, while not explicitly rated as a fire barrier, is substantial enough to meet the conditions defining one-hour fire endurance rating can be credited in partitioning. For example, a well-sealed concrete wall with a minimum thickness of 4 inches would be considered an adequate partition in the Fire PRA context, even if it lacks an explicit fire rating.

Features that should not be credited in partitioning include the following:

- Partial height walls or barriers–these may extend from the floor upward, or from the ceiling downward (this is not intended to, a-priori, exclude the crediting of walls with small unsealed gaps, typically below ceiling),
- Beam pockets,
- Radiant heat shields, and
- Equipment obstructions, e.g., pipes.

Beyond these simple examples, judgment may be necessary. The following examples are the types of considerations that will likely be encountered.

- Open doorways: Various walls that otherwise meet the partitioning criteria may have open doorways. In general, the existence of an open doorway does not preclude the crediting of the wall in partitioning. However, the analyst should consider whether or not combustible fuels exist in close proximity to one or both sides of the opening. An example would be an open doorway with cables directly above one or both sides of the doorway. In this case, hot gasses passing through the open doorway might ignite these cables, and crediting of the partition may not be appropriate.
- Unsealed cable penetrations: Various partitions (walls and floor/ceiling elements) may contain unsealed openings through which cables pass (note that an unsealed opening would imply that the partition is not a rated fire barrier). Unprotected cables represent a likely path for direct fire spread. Hence, it is likely inappropriate to credit a partitioning element that contains unsealed cable penetrations through which unprotected cables pass. Particular care should be exercised when the openings involve vertical cable runs, given the enhanced fire spread rate associated with vertical cables. Note that in this context, additional credit might be taken if either a fire wrap or fire-retardant coating protects the cables, or the cables are all routed in conduits.
- Grating: In many cases, various elevations of a given plant area may be separated by incomplete floor/ceiling structures, especially where portions of the floor/ceiling are covered by metal grating (these openings are often related to the building's ventilation flow). In such cases, the floor/ceiling might still be credited in partitioning, but consideration should be given to the size of openings. If openings represent a substantial fraction of the total partition area, or are of substantial size in an absolute sense, it may be inappropriate to credit the partition in defining compartments. The analysis should also consider the cumulative size of multiple openings.
- Open stairwells: Open stairwells may connect various levels of a building. In general, the existence of an open stairwell would not preclude partitioning of the region by floor. However, the analyst should consider the proximity of fire ignition and fuel sources to the stairwell.
- Spatial separation, outdoor locations: In exterior locations, spatial separation is an acceptable basis for partitioning. For example, the switchyard is often partitioned as a separate fire compartment from other outdoor areas. Outdoor areas do not involve the potential development of a hot gas layer, but are instead dominated by radiant heating of nearby objects. Hence, spatial separation should be considered in the context of radiant heating.
- Spatial separation, indoor locations: Spatial separation for interior (or covered) spaces is a particularly difficult challenge with respect to partitioning. Note that spatial separation that may be acceptable in the context of regulatory compliance (e.g., the Appendix R of 10 CFR Part 50, 20′ separation criteria or a regulatory deviation or exemption) is not, a-priori, an acceptable basis for fire PRA partitioning. However, in some cases, spatial separation may represent an acceptable basis for plant partitioning. In general terms, spatial separation should only be credited in very large volume spaces with minimal combustible fuel loads, e.g., areas where the potential for developing a damaging hot gas layer can be dismissed. The separation available should be extensive and free of both combustibles and fire ignition

sources, i.e., there should be no path for direct fire spread and essentially no potential for damaging radiant heating effects. In the case of vertical separation, the potential for damage or fire spread due to flame zone and fire plume effects should also be considered. The analyst should also be prepared to have partitioning decisions based on spatial separation challenged during review. Hence, clear documentation of the bases for such decisions is needed. Typical applications where spatial separation has been credited in a Fire PRA include the main turbine deck, boiling water reactor (BWR) reactor buildings, and containment.

Another factor that should be considered in the partitioning exercise is the level of detail available for mapping Fire PRA components and cables within the plant. Ultimately, the analyst will map Fire PRA components and cables to specific fire compartments, and possibly to specific locations within a fire compartment. If the information available cannot support this mapping to the level of partitioning exercised in this task, the value of the additional partitioning is reduced.

Partitioning is most helpful when specific fire ignition sources are segregated from specific fire PRA components and cable damage targets in such a way that they can be partitioned into separate fire compartments. If appropriate segregation cannot be assured, e.g., due to a lack of detailed cable routing information, then additional partitioning may provide little benefit to the analysis.

For example, if the plant cable routing information only traces cables to the level of their existence in, or exclusion from, a given fire area, partitioning beyond fire areas may provide little benefit to the fire PRA analysis. If cable locations within a fire area are not known, then conservative assumptions regarding potential cable damage will need to be made. As a result, the potential damage states assumed in the analysis will be essentially identical for each scenario developed in that fire area, regardless of the assigned partitions within the fire area.

There are at least two potential exceptions to this observation. First, additional partitioning may be desirable if additional routing information will be developed as a part of the fire PRA analysis. This might also apply even if the information will not be developed immediately, but is anticipated in support of potential future applications. Second, additional partitioning may be desirable if it helps to more clearly focus the analysis. For example, if most of the significant fire ignition sources in a fire area are confined to one or more compartments within the area, then additional partitioning may be desirable. That is, if the balance of the fire area lacks substantial fire ignition sources, the analysis may conclude that the partitioned compartment was the primary source of fire risk for the fire area. This kind of insight might be useful in various applications.

1.5.3 Step 3: Compartment Information Gathering and Characterization

The partitioning task includes at least one plant walkdown designed to confirm the partitioning decisions. That is, the primary purpose of the walkdown is to confirm the existence and integrity of the partitioning features and elements credited in defining each fire compartment. The confirmatory walkdown provides an opportunity to adjust and finalize the compartment definitions.

The confirmatory walkdown also provides an opportunity to gather basic information regarding each defined fire compartment. The information gathered facilitates development of the fire PRA database (Support Task B), compartment fire ignition frequencies (Task 6), and fire modeling (Tasks 8 and 11). The information desirable to document for future reference includes:

1. Compartment boundary characteristics (walls, ceiling, floor, doors, penetrations, dampers, etc.);
2. Ventilation features, and connections;
3. Fire protection features (e.g., detection, suppression, localized raceway fire barriers, etc.);
4. Fire source hazards (ignition and fuel source types and numbers);
5. Identification of all adjacent compartments (above, below, and to all sides);
6. Identification of components/systems/cables in each fire compartment;
7. Access routes to the fire compartment (e.g., for manual firefighting or for operator actions); and
8. SSD human actions credited in each compartment.

The level of information needed increases as the analysis progresses, and hence, may vary depending on the nature of each compartment. The level of documentation desired may also vary depending on the intended application. For example, minimal documentation would typically be needed for a stand-alone administrative/office building that is expected to screen out during qualitative screening (Task 4).

1.5.4 Step 4: Documentation

The steps performed under this task should be documented in a work package. The work package should contain the following.

- List all examined locations within the plant and provide the basis for excluding plant locations–i.e., characterize the global plant analysis boundary.
- List all fire compartments, map each fire compartment to plant fire areas/zones, and provide the basis, where necessary, for defining fire compartments.
- Provide a simple set of general plant layout drawings that identify the fire area and fire compartment boundaries.
- Document the confirmatory walkdown(s), including findings, participating personnel, and basic characterization information for the defined compartments (commensurate with the objectives of the fire PRA and its intended applications).

1.6 Uncertainty

The partitioning task is not explicitly considered as a source of uncertainty in a typical fire PRA. As noted above, ideally, the fire PRA should reach an identical conclusion regarding numerical estimates of fire risk, regardless of how the partitioning decisions are made. The combination of single and multiple compartment risk contributions should ideally assure a consistent basis of analysis, regardless of partitioning. However, in practice, this ideal is difficult to achieve and/or demonstrate.

In practice, the partitioning decisions introduce an indeterminate level of uncertainty associated primarily with the potential that single compartment and multicompartment fire scenarios are not analyzed with complete consistency.

Partitioning decisions will also impact the presentation and interpretation of the analysis results, given the presentation of risk contributions in the context of single and multicompartment scenario contributions.

In general, it is recommended that the partitioning task be performed so that the potential for a multicompartment fire impact is of very low likelihood. This will allow the analysis to focus primarily on single compartment fire scenarios, which can then be analyzed in a consistent manner. No formal quantification of the uncertainty associated with partitioning decisions is anticipated.

2
FIRE PRA COMPONENTS SELECTION (TASK 2)

2.1 Purpose

This section provides the procedure for creating the Fire PRA Equipment List. This list serves as the basis for those components modeled in the Fire PRA, and it is the key source of information for which corresponding cables need to be identified and located for the Fire PRA. As such, the Fire PRA Equipment List, Fire PRA Model, and corresponding cable identification are iterated upon to ensure an appropriate correspondence among these three items. The product of this task is a list of the equipment to be included in the Fire PRA and for which corresponding cables need to be identified and located for the nuclear power plant under analysis.

2.2 Scope

This procedure addresses creating the Fire PRA Equipment List, which needs to span (a) equipment that, if affected by a fire, will cause an initiating event; (b) all equipment necessary to support those mitigating functions and operator actions that are credited in the analysis in response to any initiator, as well as (c) that equipment which can be a source of undesirable responses adverse to safety during a fire damage sequence, such as spurious operation. The term "equipment" is used in this procedure in its broadest sense, and may include components, structures, barriers, indicators, alarms, etc., as appropriate. It is recommended that all the equipment credited in the Internal Events PRA (especially equipment in electrically diverse systems) be included in the Fire PRA Equipment List. More specifically, the scope of the Fire PRA Equipment List should include the following major categories of equipment:

- Equipment whose fire-induced failure will cause an initiating event to be modeled in the Fire PRA Model;
- Equipment to support the success of mitigating safety functions credited in the Fire PRA, including equipment implicitly included in Internal Events PRA recovery models;
- Equipment to support the success of operator actions credited in the Fire PRA;
- Equipment whose spurious actuation or other fire-induced failure modes could have an adverse effect on the success of the mitigating safety functions credited in the Fire PRA; and
- Equipment whose spurious operation or other fire-induced failure modes could likely induce inappropriate or otherwise unsafe actions by the plant operators during a fire damage sequence.

In many cases, the same equipment might be in multiple of the five major categories. For example, the reactor vessel safety relief valves (SRVs) in a BWR may be credited to open in the analysis for emergency depressurization purposes. However, should the SRVs subsequently close due to a fire-induced failure mode or open when not desirable, they can be a source of an undesirable response during a fire and may even cause a plant trip. For these reasons, the SRVs would be on the Fire PRA Equipment List. Sometimes the equipment may only relate to one or two categories. For example, the residual heat removal (RHR) high-low pressure interfacing valves in a pressurized water reactor (PWR) may not be needed to perform a safety function if the shutdown cooling mode is not credited in the fire analysis. However, fire-induced opening of these valves, if they remain powered, could cause an interfacing LOCA (initiator) and possibly cause environmental-related failure of other systems that are credited in the analysis. For this reason, and because such a failure could potentially lead to a high consequence event involving both core damage and containment bypass (see more on such cases in Section 2.5.6), the RHR interfacing valves would be on the Fire PRA Equipment List.

Similarly, other mitigating equipment, as well as instrumentation and diagnostic equipment such as indicators, lights, alarms, and similar devices considered necessary to support successful operator actions (e.g., such as carrying out the Emergency Operating Procedures (EOPs), following specific Fire Emergency Procedures (FEPs), or to credit certain recovery actions), or the failure of which could cause inappropriate operator actions, should also be added to the Fire PRA Equipment List. Examples could be remote shutdown panel (or areas) equipment and controls, steam generator level indications, core exit thermocouple indications, reactor vessel level indications, and pump and valve status/position lights, among others.

Because a key emphasis of the Fire PRA Equipment List is to identify and track relevant cables in Task 3 that could be affected by fires in the plant, the list need not contain passive/mechanical equipment (i.e., nonelectrical components) deemed by the analyst to be unaffected by fires. Such equipment may be manual valves, check valves, filters, heat exchangers, tanks, etc. (However, note that temperature, level, or other indications associated with this equipment may need to be on the list for operator action purposes). It is recommended that before beginning this procedure, the analyst has identified those types of passive/mechanical equipment that do not need to be on the Fire PRA Equipment List, even though the equipment may be in the Fire PRA Model with regard to other mechanical failures, such as random plugging. The plant's existing fire analyses or the internal flooding PRA will typically have a similar list of equipment not considered affected by fires or flooding, and should be good starting points for creating a list of equipment not vulnerable to fire. In considering equipment that should not be affected by a fire, any potential damage to valve packing and other valve internals, filter materials, etc., should not be possible or at least not prevent the equipment's operation, should it be necessary.

2.3 Background Information

2.3.1 General Task Objectives and Approach

This task's primary purpose is to determine that equipment for which cable identification and location is necessary. This is needed in order to identify what equipment fires in various locations may affect. A fall-out of creating the Fire PRA Equipment List is determining the majority of the equipment scope in the Fire PRA Model subject to that equipment which is screened out in subsequent tasks or does not need cabling information.

In order to arrive at the Fire PRA Equipment List, the two most significant inputs available are used to start creating such a list; the Internal Events PRA (with knowledge of any unique aspects from any existing Fire PRA) and the Fire Safe Shutdown Analysis (e.g., called Appendix R of 10 CFR Part 50 Analysis at some plants). Together, these two inputs provide much of what is needed for the Fire PRA. However, because these two analyses were performed for different purposes, this procedure calls for a reconciliation to make sure the differences are appropriately considered. Steps 1 and 2 of this procedure address the analysis activities to start the Fire PRA Equipment List from the Internal Events PRA and how to perform the reconciliation between the Internal Events PRA and the Fire Safe Shutdown Analysis. Where options are available to the analyst in carrying out these steps, those options and corresponding considerations are offered.

Steps 3 through 6 address how to build on the product of Steps 1 and 2 and more completely identify the equipment of interest. As in the earlier steps, where options are available to the analyst in carrying out each step, they are noted and briefly discussed.

All the options can be generally considered as tradeoffs between the level of accuracy and completeness of the Fire PRA vs. the resources needed to achieve that level. The latter steps in the procedure are largely additions to the Fire PRA Equipment List from Steps 1 and 2 to make the list more complete and to ensure no potentially important equipment has been missed. In Step 3, equipment is added (as necessary) which, due to a fire, could cause an automatic or forced manual plant trip. Steps 4 and 5 address the potential for spurious equipment operation or malfunctions that could affect system performance and/or operator performance during the response to a fire. Such spurious operations are usually too improbable for consideration in the Internal Events PRA, but in the case of a fire, multiple spurious equipment operations or malfunctions may be somewhat likely and cannot easily be dismissed. Step 6 addresses the special subject of equipment whose failure may cause “potentially high-consequence” events to ensure this equipment is included in the list.

Finally, Step 7 covers the documentation of the Fire PRA Equipment List.

2.3.2 Assumptions

The following key assumptions underlie the use of this procedure.

- A good, quality Internal Events PRA and Fire Safe Shutdown Analysis are available.
- The analysts, collectively, have considerable knowledge and understanding of the plant systems and operator performance, as well as the Internal Events PRA and the Fire Safe Shutdown Analysis, and/or have access to other staff that can provide such input.
- The scope and number of spurious equipment operations or malfunctions of concern can easily grow to proportions that are unreasonable to address without unlimited resources. An approach for addressing this subject is found under Steps 4 and 5, as well as **Appendix 2A**. In carrying out those steps, it is assumed the analysts will:
  - As a minimum, identify any single equipment item within each system (e.g., a valve that if spuriously opened would create a flow diversion path) or associated with a particular operator action of interest (e.g., a high-temperature pump motor alarm that, if spuriously actuated, would directly lead to the operator shutting down the pump).

- As resources allow, include simultaneous "doubles," "triples," etc., combinations of spurious operations or failures (e.g., multiple valves, multiple indicators). It is assumed these will be identified at least within a system or associated with a specific operator action of interest. It is not expected that such searches will cross system boundaries (e.g. a spurious operation of a high pressure injection (HPI) isolation valve with a spurious operation of an AFW valve) or involve multiple operator activities. Keeping within this framework is analogous to how common cause is largely treated in Internal Events PRAs, and thus considered appropriate for the Fire PRA. This is not to say that the procedure specifically precludes examinations across systems or activities. In fact, if the analysts are aware of known vulnerabilities that cross system or activity boundaries or can easily examine for such simultaneous failures, their inclusion is encouraged.

2.4 Task Interfaces

2.4.1 Input from Other Tasks

Given that the initial development of the Fire PRA Equipment List will largely come from the existing Internal Events PRA and any existing Fire Safe Shutdown Analysis, this task only needs initial assistance from those analysts performing Task 12, Post-Fire Human Reliability Analysis, to define operator actions and hence related equipment (e.g., specific indicators) of potential significance when carrying out Step 4. However, it is also assumed that two prerequisites have been satisfied. The first is the plant boundary definitions and compartment designations from Task 1, Plant Boundary Definition and Partitioning, so that the Fire PRA Equipment List can include associated location information about each equipment item. The second assumed prerequisite, related to Support Task B, Fire PRA Database System, is that the information needed about each equipment item has been agreed upon and is therefore compatible with the expected input for that database.

The initial development of the Fire PRA Equipment List should be as complete as possible. However, in concert with the iterative nature of PRA, the Fire PRA Equipment List may need to be modified by products of other tasks in the Fire PRA process. For example, if Task 12, Post-Fire Human Reliability Analysis, develops new fire-related actions to consider in the analysis, the Fire PRA Equipment List might have to include new instruments that uniquely support these additional actions (with subsequent cable identification, etc.). In some cases, the analysts may decide that it is more efficient to perform portions of other tasks to demonstrate that certain equipment items do not have to be included on the list (e.g., demonstrating that a valve cannot spuriously fail/operate in an undesirable state). While this latter approach should be followed with care since it tends to disrupt the logical flow of first including any potentially important equipment and then finding reasons to later screen items from the analysis, there may be times when the resource tradeoffs may make this the best course of action. Thus, the analysts should be open to adjusting the Fire PRA Equipment List as other task products affect the scope of the Fire PRA Model, whether the other tasks are performed after Task 2 (the normal flow expected in carrying out the process) or before or in concert with Task 2.

2.4.2 Additional Plant Information Needed to Support this Task

This procedure assumes the availability and use of the following to support the creation of the Fire PRA Equipment List.

- Internal Events PRA (with use of any existing Fire PRA models, insights, etc.),
- Fire Safe Shutdown Analysis,
- Plant P&IDs and electrical diagrams,
- Plant procedures (e.g., emergency operating procedures, fire procedures, annunciator response procedures), and
- Other plant drawings and documents, as necessary.

Analysts' knowledge of plant system operation, potential failure modes of equipment, and potential operator responses related to possible conditions of equipment or instrumentation will enhance the use of this procedure and make it more efficient.

Where specifically called out, analysts are also referred to the EPRI Fire PRA Implementation Guide (TR-105928) [2.1] to aid in carrying out this procedure.

2.4.3 Walkdowns

Most likely, existing documentation will be adequate to provide all the necessary information produced for the Fire PRA Equipment List as described in Step 5. Thus, walkdowns will generally not be necessary for this task. However, especially for equipment location information, there may be times when a walkdown is needed to determine or verify certain information. In such cases, this need for a walkdown should be planned so as to coincide with other task walkdown needs for efficiency reasons. See Support Task A, Plant Walkdowns.

2.4.4 Outputs to Other Tasks

The primary product of this procedure, the Fire PRA Equipment List, is used to support Fire PRA Cable Selection (Task 3), to provide the necessary inputs about each equipment item into the Fire PRA Database System (Support Task B), and to provide a basis for much of what is modeled in the Fire-Induced Risk Model (Task 5), as modified by subsequent screening and other tasks).

2.5 Procedure

The steps that follow provide a method to create the Fire PRA Equipment List. While this procedure might suggest this task is carried out once, it should be recognized that as a practical matter, PRA is an iterative process. Hence, as other tasks are performed, there may be reason to revisit and redo portions of Task 2 during the development, screening, and eventual quantification of the Fire PRA.

While it is recommended that Step 1 be performed first, **Steps 2 through 5 can be done in any order or coincidentally**, as preferred by the analyst. A possible logical order is provided here for procedure writing purposes.

2.5.1 Step 1: Identify Internal Events PRA Sequences to be Included (and those to be excluded) in the Fire PRA Model

In this step, the Internal Events PRA Model is reviewed to identify the accident sequences that should potentially be included in the Fire PRA and, hence, initiate the identification of the related equipment to be included in the Fire PRA Equipment List. This step sets the initial scope of the fire analysis. It is also a deliberate reduction step; i.e., its purpose is to find those deletions that can be made in the Internal Events PRA Model because they are irrelevant to the Fire PRA (subsequent additions to the model and equipment list will be addressed in later steps). The types of sequences that should generally be eliminated from the PRA include:

- Sequences associated with initiating events involving a passive/mechanical failure that can generally be assumed to not occur as a direct result of a fire. These typically include LOCAs (pipe breaks only–not due to valve openings), vessel failure, steam generator tube ruptures, and other secondary system breaks (e.g., main steam and feedwater line breaks).
- Sequences associated with events that, while it is possible that the fire could cause, a low-frequency argument can be justified. For example, it can often be easily demonstrated that anticipated transient without scram (ATWS) sequences do not need to be treated in the Fire PRA because fire-induced failures will almost certainly remove power from the control rods (resulting in a trip), rather than cause a "failure-to-scram" condition. Additionally, fire frequencies multiplied by the independent failure-to-scram probability can be argued as small contributors to fire risk.
- Sequences on the basis of other specific considerations. For example, it may be decided that no credit will be given in the Fire PRA for certain systems (e.g., RHR shutdown cooling) for reasons related to the anticipated size of the Fire PRA Model and a desire to simplify it (or other considerations). In such a case, any sequences involving the potential success of RHR shutdown cooling would also be eliminated, perhaps eliminating the need to include RHR shutdown equipment in the Fire PRA Equipment List unless some of the RHR equipment would still be included because of spurious operation or other concerns. As another example, the analysts may choose to only credit and model safe shutdown paths associated with fires, such as limiting the effort to just Appendix R of 10 CFR Part 50 equipment. This type of elimination has obvious tradeoffs—simplification of the model vs. a higher risk from fire because no credit for the system is given in the Fire PRA. Hence, such elimination should be done thoughtfully and with consideration of future applications of the Fire PRA. *In general, all mitigation systems and related equipment for a given scenario in the Internal Events PRA should be included in the Fire PRA. If the scope of the Fire PRA will instead be limited, such as only addressing Appendix R of 10 CFR Part 50 equipment, a special 'caution' is discussed in* ***Appendix 2A*** *to ensure the resulting analysis is conservative (see* ***Appendix 2A****).*

Whatever is eliminated, justification for exclusion of any scenarios and the resulting "reduced" PRA model should be noted. In particular, be careful not to eliminate sequences that could adversely affect equipment for which credit is given in the Fire PRA. For example, steam

generator overfeeds may be considered for elimination, since they involve overcooling and not lack of cooling to the core. However, if the steam driven auxiliary feedwater pump is credited, its operability could be adversely affected by such an overfeed causing subsequent failure and possible loss of all 'credited' steam generator feed.

All remaining sequences in the Internal Events PRA Model will be considered in the development of the Fire PRA Model. The equipment associated with the remaining sequences is the primary basis and the recommended starting point for creating the Fire PRA Equipment List (but not including mechanical/passive equipment, as suggested earlier).

Table 2-1 illustrates the thought process carried out in this step and presents a possible means to document the choices made. The Table 2-1 entries are illustrative only; i.e., an *a priori* list of sequences that can be eliminated for all plants cannot be made due to plant differences or specific vulnerabilities. Nevertheless, Table 2-1 is a good source of sequence types that most often can be eliminated with appropriate consideration of plant specific features.

Table 2-1
Illustration of Accident Sequence Types to be Included/Excluded in the Fire PRA

Accident Sequence Type	Considered in Internal Events PRA	Considered in Fire PRA Model
Transients with loss of core cooling	yes	yes
Transient-induced LOCAs	yes	yes
Loss of Offsite Power, including Station Blackout	yes	yes, if the fire can induce loss of offsite power
LOCAs (pipe breaks)	yes	no–fire cannot induce a pipe break
Steam Generator Tube Rupture (SGTR)	yes	no–fire cannot induce SGTR
Secondary Steam/Feed Line Breaks/Depressurizations	yes	no for breaks–fire cannot induce a break yes, if the fire can induce spurious opening of a power–operated secondary relief valve
ATWS	yes	no–not likely for fires
Interfacing Systems LOCA	yes	yes, if the fire can induce spurious opening of a power–operated interface valve
Vessel Rupture	yes	no–fire cannot induce vessel rupture (excluding pressurized thermal shock (PTS) concerns)
Large Early Release Frequency (LERF) Considerations	yes, containment isolation, containment coolers, and containment spray (if in the LERF model).	yes, containment isolation, containment coolers, and containment spray (if in the LERF model).

2.5.2 Step 2: Review the Internal Events PRA Model Against the Fire Safe Shutdown Analysis

Considerable work has already gone into the Fire Safe Shutdown Analysis for the plant and the identification of important equipment from that analysis perspective. Hence, it is another significant information source in creating the Fire PRA Equipment List.

In this step, a series of comparisons are made between the "reduced" PRA model from Step 1, above, and the Fire Safe Shutdown Analysis to see if modifications (typically additions, but further deletions could be justified) to the evolving Fire PRA Equipment List are appropriate. These comparisons are related to potential differences in:

- Functions/success criteria/sequences considered,
- Systems (including support systems) considered,
- End-states affecting equipment covered by each analysis,
- Other miscellaneous equipment considered, and
- Manual actions, especially those credited in the Fire Safe Shutdown Analysis.

These differences are expected and arise for a number of reasons. First, the PRA is a best estimate analysis and considers beyond design-basis–events, including multiple equipment failures. The result of these two considerations is that the PRA usually models more mitigation systems (or trains of systems) and equipment (e.g., modeling of non-safety systems that may not be credited in the Fire Safe Shutdown Analysis or the Final Safety Analysis Report (FSAR)), considers the possibility of losing even the "protected" Fire Safe Shutdown Analysis equipment, and is often based on more realistic or best-estimate success criteria. Conversely, the PRA may only model equipment necessary to achieve a hot standby end-state condition, rather than cold shutdown, and usually considers only a sustained safe shutdown for an assumed 24 hours, rather than 72 hours.

The PRA model will likely not include fire-related manual actions credited in the Fire Safe Shutdown Analysis or specific operator actions associated with carrying out FEPs that are performed in parallel with the EOPs at some plants or in place of the EOPs at other plants. To the extent these actions should be credited, equipment associated with these actions (as well as the actions themselves) will need to be included in the development of the Fire PRA Equipment List and the Fire PRA Model.

The PRA model may or may not contain failure modes for spurious operation of equipment, since the random failure probabilities for these failures are often considered too improbable. Since a fire may make the likelihood of such failure modes more important, the PRA model needs to be expanded to include these possible spurious operations.

Finally, while the PRA model explicitly addresses the failure of instrumentation and controls needed for automatic actuation of equipment, it usually does not explicitly treat the availability of process monitoring and diagnostic instrumentation and controls associated with operator actions. These are often implicitly addressed in the Human Reliability Analysis, and the associated equipment is not explicitly included in the PRA logic models.

The mitigation systems defined in the Fire Safe Shutdown Analysis are typically based on the following plant-critical safety functions (which may be similar, but not necessarily identical, to that identified for PRA purposes):

- Reactivity Control,
- Reactor Coolant System (RCS) Integrity/Pressure Control,
- RCS Inventory Control,
- Decay Heat Removal,
- Containment Integrity,
- Process Monitoring, and
- Support Functions.

The Fire Safe Shutdown Analysis ensures that at least one train of the mitigation systems needed to perform each of the above critical safety functions is protected and thus credited in the design basis fires for the plant. The systems and related equipment identified in the Fire Safe Shutdown Analysis often stem from more conservative assumptions and success criteria than the "best-estimate" approach used in the Internal Events PRA. This, in turn, is based on corresponding design basis rules, such as generally crediting a single protected safe shutdown train of equipment, and demonstrating the ability to achieve a cold shutdown end-state and remain safely shutdown for 72 hours. The Fire Safe Shutdown Analysis also addresses the impact of some spurious actuation due to fire-induced cable shorts during a fire scenario. Local or manual actions are also credited to prevent equipment damage (e.g., disable a valve breaker) or to recover equipment affected by the fire scenario (e.g., close a spuriously opened valve). Finally, the Fire Safe Shutdown Analysis addresses the survivability of certain process monitoring and diagnostic instrumentation and controls needed for fire mitigation.

For these reasons, the Fire Safe Shutdown Analysis and the Internal Events PRA should be reviewed and the above differences reconciled, with the corresponding impact on the creation of the Fire PRA Equipment List identified. Additionally, modeling of equipment relative to unique fire-induced failure modes, such as spurious equipment actuations, need to be added to the PRA and thus be included in the Fire PRA Equipment List.

Hence, the following comparisons are to be performed, and it is advisable to document these comparisons sufficient to retrieve the bases for the comparison results.

2.5.2.1 Step 2.1: Reconcile Function/Success Criteria/Sequence Differences

It is expected that limited additional equipment considerations will arise on the basis of the Fire Safe Shutdown Analysis as compared to the "reduced" PRA from Step 1, above. Nevertheless, any differences in the functions, success criteria, or sequences treated in the two analyses should be identified and reconciled. This is done to determine if there are any legitimate functions, success criteria, or sequence considerations in the Fire Safe Shutdown Analysis different from that in the reduced PRA that either suggest additions that should be made to the PRA (and associated equipment to the Fire PRA Equipment List) or justify further elimination of equipment handled in the PRA.

For example, the Fire Safe Shutdown Analysis may specifically address certain instrumentation as critical to key human actions as part of a sequence definition. If credit for these actions will be carried into the Fire PRA, such instrumentation is included in the Fire PRA Equipment List and failures of the instrumentation should be subsequently treated in the Fire PRA model.

2.5.2.2 Step 2.2: Reconcile System (Including Support System) Differences

In this step, the analyst should identify other system differences between the two analyses that may not be directly attributable to the differences identified in Step 2.1, above. These differences should be reconciled with decisions made about the impact on the PRA and thus the Fire PRA Equipment List.

For example, while it may lead to overly conservative results (as long as the scope 'Caution' in **Appendix 2A** is addressed), the analyst might consider excluding one or more PRA systems (or portions of a system, such as a whole train) from the Fire PRA model based on a similar exclusion in the Fire Safe Shutdown Analysis due to resource limitations, considering all the cables that would otherwise need to be identified. This is not a recommended (but allowable) practice, since it could yield overly conservative results when using the fire portion of the model for risk-informed applications. For instance, if there are three or more diverse/redundant AFW trains for secondary heat removal, one could conceivably make an argument for excluding the feed and bleed function and the associated equipment considerations. A system importance analysis on sequences selected for the Fire PRA model can be performed using the Internal Events PRA to determine which systems could be excluded from the Fire PRA model without significant impact. Portions of a system or entire systems that are perceived to have a negligible impact on risk (e.g., have a risk achievement worth of less than two in the Internal Events PRA) may be candidates for exclusion from the Fire PRA model. The analyst needs to consider the potential equipment outage configurations if the Fire PRA model will be used to support risk-informed applications. As stated above, decreasing the fire equipment scope from that covered in the Internal Events PRA, while allowable, is not recommended.

On the other hand, the Fire Safe Shutdown Analysis may suggest additions to the Fire PRA. For example, the Fire Safe Shutdown Analysis may assume heating, ventilation, and cooling (HVAC) equipment is needed to support a particular mitigation system, while the PRA (using a best-estimate approach) may determine the HVAC is not needed during internal events. Considering potential heat loads in fire situations or wanting to credit HVAC for smoke removal from an area (based on insights from iterations of Task 8 or 11), could result in a decision to add HVAC equipment to the PRA and hence the Fire PRA Equipment List.

The point is, in this step, the analyst is reconciling system differences and making judgments about additions or deletions to the PRA based on different observations. While expectations are that the PRA (and hence the Fire PRA Equipment List) will not change much on the basis of this comparison, some changes may be identified as desirable.

2.5.2.3 Step 2.3: Reconcile System/Equipment Differences Due to End-State and Mission Considerations

If not already addressed in the above steps, the analyst should identify any equipment differences because of analysis end-state differences, such as achieving hot vs. cold shutdown. A typical successful PRA end-state implies that the plant, at 24 hours following the initiator, is safe and stable (not degrading). It is implicitly assumed that accident management actions will be implemented within 24 hours, should they be necessary. In some cases, remaining at hot shutdown is acceptable and the transitional risk of changing plant modes is averted. In other cases, the plant cannot remain in a stable condition at hot shutdown within the 24-hour period and it is necessary to place the plant in cold shutdown. For example, in a LOCA situation with failure of long-term makeup or recirculation, credit may be given for going to cold shutdown (and thus including RHR-related equipment on the Fire PRA Equipment List). A review of the necessary end-states for the selected applicable sequences should be performed.

In the Fire Safe Shutdown Analysis, a successful end-state is achieved when the plant is placed in cold shutdown within a 72-hour period, therefore including equipment necessary to achieve this end-state.

If the fire response procedures or the fire event itself necessitates a transition to cold shutdown, the Fire Safe Shutdown Analysis end-state should be used. Otherwise, the PRA end-state definitions should be used as the default. Any new equipment or failure modes added because of end-state differences should be reflected in the Fire PRA and the Fire PRA Equipment List.

2.5.2.4 Step 2.4: Reconcile Other Miscellaneous Equipment Differences

In this step, other equipment differences not explained by the prior steps should be addressed. This may come from a variety of reasons including, for instance:

- Differences in the level of modeling or definition of component boundaries. For example, the Fire Safe Shutdown Analysis may treat equipment items separately, such as a breaker and a pump motor, while the Internal Events PRA model may treat both under a "super-component"–the pump. Where review of plant drawings or other information discerns that equipment locations (e.g., breaker vs. pump motor) are different, it may be desirable to expand the Fire PRA Equipment List accordingly. An alternative (and probably preferred) approach is to only list the pump on the Fire PRA Equipment List and ensure that the cabling identification and circuit analysis tasks (Tasks 3 and 9), as necessary, will discern the different locations of the pump and breaker, along with their associated cabling.
- Differences due to consideration of spurious actuations or other failure modes. The Fire Safe Shutdown Analysis will have likely considered undesirable spurious actuations and/or other fire-unique equipment failure modes not in the current Internal Events PRA. To the extent these are relevant to the functionality of the systems needed for the Fire PRA Model, this equipment should be added to the Fire PRA Equipment List, and new failure modes should be noted for inclusion in the Fire PRA Model. Care should be taken in the actual modeling process, under Task 5, to ensure that mutually exclusive failure modes are prevented or otherwise tracked for appropriateness so that, for instance, a breaker "fail to open" and "fail to remain closed" failure modes do not appear in the same sequences/cut sets. Nevertheless,

the breaker would become an item on the equipment list. Step 4 provides a more thorough search to identify additional equipment for inclusion because of the potential for spurious actuations (singularly or in combination) that could challenge safe shutdown capability. Spurious actuation failure modes of electrical components should be conditional on power availability to the component.

- Differences due to the treatment of instrumentation and diagnostic equipment. For example, the Fire Safe Shutdown Analysis may explicitly consider certain instrumentation and other diagnostic equipment, while the Internal Events PRA may not model these at all. At this stage, some of the Fire Safe Shutdown Analysis instrumentation and diagnostic equipment should be added to the Fire PRA Equipment List, as they are relevant to monitor fundamental process variables associated with the systems needed for the Fire PRA Model, or to human actions credited in the Internal Events PRA model. Step 5 enhances this step to identify additional instrumentation and diagnostic equipment to support the Human Reliability Analysis portion of the Fire PRA and for inclusion in the Fire PRA Equipment List.
- Differences due to the need to use/protect fire fighting equipment such as fire panels, fire pumps and water sources, and delivery pathways, including any isolation valves. To the extent this equipment is going to be credited in some fire situations, it should also be on the Fire PRA Equipment List; a likely addition from that in the Internal Events PRA. Note that later in the modeling phase, care should be taken when crediting fire systems for both firefighting as well as an injection source for cooling the core.

2.5.2.5 Step 2.5: Specific Review of Manual Actions

As a special consideration in the previous step, the need to specifically review manual actions that should be credited in the Fire PRA is an important part of this Internal Events PRA and Fire Safe Shutdown Analysis reconciliation (see more under Step 5). These will take the form of:

- actions needed for safe shutdown,
- actions needed to prevent or recover from spurious events, and
- additional actions deemed appropriate by the operator or recommended by the procedures (e.g., opening two trains of valves when only one is needed in case of spurious closure of a valve).

Numerous manual actions of the types listed above are often credited in a Fire Safe Shutdown Analysis. In this step, the need to review these manual actions and whether they should be credited in the Fire PRA Model and to identify, if any, associated equipment items (for the Fire PRA Equipment List) to carry out the actions is highlighted here to ensure it is part of the reconciliation process.

With perhaps the exception of following specific FEPs, it is desirable to initially take little or no credit for manual actions (often recovery-related or preventive) cited in the Fire Safe Shutdown Analysis until it is necessary to do so later as the Fire PRA Model is exercised (under Task 7) and the risk-important features of the plant begin to emerge. In this way, the analysis is less encumbered by having to account for and model such actions, and it may not have to rely on such actions to mitigate issues where the risk is already low (indeed, it may be shown that crediting such actions is unnecessary and perhaps can even be dropped from future fire

regulatory compliance). Whatever is done with regard to crediting such actions, the Fire PRA model will need to include such actions if they are to be credited and any associated mitigating equipment or diagnostic equipment necessary to take the actions should also be added to the Fire PRA Equipment List.

2.5.3 Step 3: Identify Equipment Associated with Fire-Induced Initiating Events

To the extent the above steps have not already done so, this step is to identify that equipment that could cause an initiating event as a result of fire effects on the equipment. The goal of this step is to identify what initiator(s) might occur if a fire in any given compartment affects equipment. The review for such equipment is expected to consider (see Table 4-1 under section 4 of EPRI-TR-105928 [2.1]):

- equipment whose failure would cause an automatic trip;
- equipment whose failure would likely cause a manual trip, as specified in fire procedures or plans, or other instructions; and
- equipment whose failure will invoke a limiting condition of operation (LCO) that would necessitate a shutdown. In the latter case, it is not desirable to identify cases where shutdown is unlikely to occur before the fire is extinguished and where "limited" effects are expected. Hence, the analyst needs to judge which cases are included and to provide justifications (EPRI-TR-105928 provides a suggestion of including cases where shutdown within 8 hours is necessary [2.1]).

Note that, taken individually, there is a lot of equipment in the plant whose failure could cause an automatic or forced manual trip (e.g., many balance-of-plant components). Hence, this identification process needs to balance the accuracy associated with identifying specific equipment items (e.g., feedwater regulator valves) with the potentially conservative treatment of broad equipment groups identified in a global manner (e.g., feedwater equipment). The appropriate balance is largely a function of resources and the practicalities associated with identifying equipment and corresponding cable locations.

Any available information regarding broad definitions of system/equipment effects and locations will be useful in this identification process, since it is simply not practical to have to trace cables for every individual equipment item that could cause a trip because of a fire. In some cases, the analyst may need to assume that certain equipment or its cabling is in a location, even though this has not been definitively determined.

Since it is not practical to perform the necessary review of all equipment and its cabling to define the fire-induced initiators for various compartments, the analyst may have to assume an initiator will occur for a given fire. Which initiator is assumed to occur (e.g., reactor trip, loss of feedwater, loss of air, loss of service water) should be based on a worst-case consequence point-of-view for the assumed fire. Hence, if there is uncertainty as to the initiator caused by a given fire in a given location because it is impractical to determine all the cabling and related equipment in the location that might cause an initiating event, the analyst should assign a worst-case initiator from the plant consequence perspective based on suspected initiator possibilities and the effects of these initiators at the plant. For instance, if a fire in a AFW room is suspected to cause an initiating event, but it is uncertain whether that would be a loss of feedwater or a

loss of offsite power (because all the equipment associated with feedwater or offsite power have not been listed and their cables traced), the analyst should determine which initiator would be worse from a CDF/LERF perspective for the AFW fire and assign the initiating event accordingly. These types of judgments, and the associated plant effects (e.g., initiator type induced) should be made conservatively, justified, and documented. The Fire PRA Equipment List then needs to be expanded to include equipment identified from this step at whatever level (e.g., system, train of system, component) it is identified, including its location, and put in the database (Support Task B).

2.5.4 Step 4: Identify Equipment with Potential Spurious Actuations that may Challenge the Safe Shutdown Capability

This step is aimed at expanding the Fire PRA Equipment List, and thus potentially the Fire PRA Model, to include adequate consideration of the potential for harmful fire-induced spurious actuations not already addressed in Step 2.4, above, based solely on the Fire Safe Shutdown Analysis comparison. Performing this step can potentially be much more efficient if information from other tasks (performed ahead of this task or iteratively with it) is simultaneously used. For instance, considering relevant fire frequencies, severity factors, target effects, scoping CCDP/CLERP estimates, and preliminary circuit failure analyses may eliminate the need to address some postulated spurious actuations because they would be unimportant or cannot occur. This is important in attempting to limit the effort and resources necessary to perform this step in the procedure; hence, it is highly recommended that such iterations be utilized.

In this step, the analyst performs a systematic review of spurious actuations that could challenge the ability to achieve safe shutdown (by causing an initiator or affecting mitigating equipment) based on the systems and initiators identified from previous steps. Note that this review does not assume that just one spurious actuation occurs at a time, but that multiple simultaneous actuations are possible.

This systematic review is conducted on the basis of accident sequence types and related mitigation system functions in the current Internal Events PRA model (if it is possible to credibly identify a new sequence type because of fire events, these should also be considered). This is primarily a rigorous search through the system P&IDs, with additional review of documents such as electrical drawings and the Internal Events PRA sequence solutions, if helpful, to identify single and multiple spurious actuation failures that may be valid failure modes for the Fire PRA Model. As part of this search process, it is advisable to conduct an expert panel review for any other spurious events and subsequent new scenarios that, because of their dynamic or intricate nature, may not be otherwise easily identified. For example, at one plant, it was determined that a fire-induced spurious closure of a single RCP seal thermal barrier heat exchanger valve, and failure (may be spurious or non-spurious) of seal injection, necessitates the need to use a standby shutdown facility that in turn, does not currently have adequate capability to mitigate a LOCA. Such new spurious events and subsequent fire scenarios should be addressed in the Fire PRA and Fire PRA Equipment List. In performing this review, focus should be on equipment not already identified on the Fire PRA Equipment List, such as those affecting possible diversion paths, or the failure of electrical-operated equipment on the function of passive/mechanical devices, such as heat exchanger operation or tank level. Spurious actuation failure modes of electrical components should be conditional on power availability to the component.

Table 2-2 (illustrative only) provides an overview of how single and multiple spurious actuation failures might be important for some accident sequences in the Internal Events PRA Model, hence, the appropriate system plant drawings should be reviewed for potential sources of harmful spurious actuations.

Table 2-2
Illustrations of Spurious Actuation (Single and Multiple) of Electrical-Operated Equipment Using the Internal Events PRA Model

Accident Sequence Type	Example Effects on Initiating Event Models	Example Effects on Mitigation Models
Transients with Loss of Core Cooling	Will cause loss of MFW	Will cause failure of AFW, HPI, PORVs, HPCI, RCIC, SRVs via loss of flow or flow diversion
Transient-Induced LOCAs	Will cause a stuck-open PORV, SRV, or a RCP/Recirculation Pump Seal LOCA	Will cause failure of HPI, HPCI, RCIC or containment sump recirculation valves via loss of flow or flow diversion
Loss of Offsite Power, including Station Blackout	Will cause a loss of offsite power	Will cause failure of diesel generators or power restoration circuits
Main Steam/Feed Depressurizations	Will cause the opening of a power–operated secondary relief valve	Will cause failure of MFW/AFW, HPI, MS Isolation valves or PORVs
Interfacing Systems LOCA	Will induce spurious opening of power-operated ISLOCA interface valves (if remain powered)	
Large Early Release Considerations		Will induce spurious operation of a containment isolation valve, or failure of containment coolers or spray (if in the LERF model)

To place some practical, yet reasonable limitations on the performance of this step, the following represent typical considerations that are recommended (see **Appendix 2A** for more on this subject). The analyst may desire to use these or other considerations in performing this step (e.g., see NEI-00-01, Appendix F [2.2]). Whatever approach is used, or if disposition of other or unique situations is necessary, that approach or dispositions should be documented and justified.

- Equipment already on the Fire PRA Equipment List need not be cited again *if* it is agreed that the cable identification process and circuit analysis will address all failure modes of the equipment based on normal, desired, and failed states considered, including possible spurious operation of indications/alarms associated with that equipment (e.g., motor temperature indication for a pump motor). (Note that not all potentially important failure modes for the Fire PRA may be included in the Internal Events PRA, so care should be exercised in defining the normal, desired, and failed states). Otherwise, the indicator/alarm, if important to include, will need to be listed on the Fire PRA Equipment List separate from the associated component (in this example, possibly the temperature indicator as well as the pump itself, depending on what will be included in the cable identification and circuit analysis for the pump).

- In the search for spurious operating equipment, the system is assumed to be in its normal configuration and not in an unusual line-up, such as during test and/or maintenance, as long as the time in these less-usual configurations is small (e.g., ~1%) relative to the time it is in its normal configuration. *Note: future SDP or other evaluations involving unusual or misalignments will then need to be analyzed separately.*
- Possible flow diversion paths representing an inconsequential effect are screened from further consideration. For example, a spurious opening of a normally closed valve that represents a small diversion relative to the main mitigation system flow path (e.g., ~1/10th the flow area) may be eliminated from further analysis and hence not placed on the Fire PRA Equipment List. However, the analyst should consider multiple diversion paths spuriously opening at the same time before making this determination.
- Possible flow diversion paths that are too unlikely to occur can be screened from further consideration. For example, a flow diversion path for a system protected by one or more passive/mechanical devices not affected by a fire (e.g., a manual valve, a check valve, or mechanically locked close electrical-operated valve) may be eliminated from further analysis and that equipment not added to the Fire PRA Equipment List. Another example might be possible flow diversion paths for a system protected by multiple and supposedly independent electrical equipment items (e.g., multiple normally closed valves divided up among redundant trains that are divisionally separated and thus are not supposed to share common locations). These may be eliminated from further consideration on the basis of an unlikely number of multiple and simultaneous (or sustained) actuations due to a single fire that are necessary to result in the flow diversion. If eliminating equipment on this basis, a check should be made to ensure separation of cabling and power source so that a fire is very unlikely to affect the redundant equipment. Such eliminations are discouraged, but if performed, should consider pathways prioritized by effects (e.g., degree of mitigation capability that would be defeated). The burden of acceptability of such eliminations is on the analyst.
- Spurious operation of the equipment is considered inconsequential and so screened. For example, suppose a temperature control valve can spuriously operate between two mechanically limited control positions and not significantly affect the safety function of interest, nor cause an initiating event. In such a case, the valve may be eliminated from further consideration and is not added to the Fire PRA Equipment List.
- Be careful to examine electrical equipment that can affect the function of otherwise passive/mechanical devices, such as level instrumentation on a tank or temperature monitoring of a heat exchanger or filter. If the spurious operation of this electrical equipment can affect the passive/mechanical device in an unsafe way not already accounted for with the existing equipment list (e.g. automatically drain a tank), that electrical equipment should be added to the Fire PRA Equipment List.

To the extent that the spurious actuation search identifies new equipment not otherwise on the Fire PRA Equipment List, the associated equipment should be added to the Fire PRA Equipment List for cable identification and subsequent circuit analysis, if later needed.

2.5.5 Step 5: Identify Additional Mitigating, Instrumentation, and Diagnostic Equipment Important to Human Response

This step is aimed at expanding the Fire PRA Equipment List, and thus potentially the Fire PRA Model, to adequately consider other mitigating equipment, instrumentation, and diagnostic equipment necessary for human actions not already addressed in previous steps. Of interest, is the identification of equipment considered necessary for the operator to correctly perform actions to be credited in the Fire PRA, as well as equipment that, if spuriously operated due to the fire, could likely induce an inappropriate or otherwise harmful action by the operator. Such harmful actions primarily consist of shutting down or changing the state of mitigating equipment in an unsafe manner. For example, thinking the safety injection (SI) throttling criteria are met and shutting down SI when it is inappropriate to do so. This part of the analysis is implemented by performing the following steps. Note that while the steps are presented sequentially, in practice, the two steps will likely be performed simultaneously and with iteration.

2.5.5.1 Step 5.1: Identify Human Actions of Interest

In this step, the analyst, working with human reliability specialists (see Task 12), identifies human actions (procedure-driven and recovery) either credited in the Internal Events PRA or those that may need to be credited because of the FEPs or similar instructions. This is done by reviewing the existing credited actions in the Internal Events PRA, as well as relevant plant procedures, including, as a minimum, the EOPs and specific FEPs that address actions pertaining to safe shutdown.

In deciding which actions to credit, the analyst may choose to perform some sensitivity analyses with the current Internal Events PRA (or during the development of the Fire PRA Model) and setting the human action failures to a screening value provided by Task 12 to determine if such actions need to be credited in the Fire PRA. (Note that while such a possible decrease in the scope of the Fire PRA to save resources is possible, it is recommended that all actions treated in the Internal Events PRA and those necessary to achieve safe shutdown in FEPs be included in the Fire PRA).

Possible harmful actions of interest will emerge during both the above review of the procedures (looking for actions that, for instance, shut down mitigating equipment) as well as during performance of the next step, when postulated spurious failures of instrumentation and other diagnostic equipment could induce an unsafe human action of interest.

2.5.5.2 Step 5.2: Identify Instrumentation and Diagnostic Equipment Associated with both Credited and Potentially Harmful Human Actions

In this step, the analyst first identifies the mitigating equipment, as well as instrumentation and diagnostic equipment, deemed necessary to credit the human actions identified in Step 5.1. Again, this comes from review of the Internal Events PRA and relevant procedures (e.g., FEPs) or recovery action considerations to identify the equipment needed to perform the actions of interest. If this equipment is not already included (even implicitly by an associated circuit) on the list, it is added to the Fire PRA Equipment List. The exception would be if the level of

redundancy and diversity in the instrumentation used by the operator is so high (for instance, multiple channels of indication that are divisionally separated and should not share common locations, at least one of which is diverse, such as rod-in lights as a back-up to neutron power) that the number of failures necessary to confuse or prevent the operator from taking the appropriate action is considered too unlikely. In such cases, the instrumentation does not need to be added to the Fire PRA Equipment List, but the reason why should be documented.

As part of this step, the spurious instrumentation operation search is somewhat more complicated. To perform this search, a systematic review of procedures like the EOPs, FEPs, or annunciator response procedures, training manuals, and other material is likely to be necessary to identify both where possible spurious operation of instrumentation or diagnostic equipment could induce a harmful action, as well as the harmful action itself (this should be determined with input from operators or training staff, as well as working with the HRA analysts). Cases of particular importance include those where one or more spurious operations of the instrumentation may induce the operator to shut down or harmfully change the state of mitigating equipment (e.g., isolate a good steam generator in a PWR or defeat emergency depressurization in a BWR) during a fire event. Clues of where such concerns exist can come from identifying the steps in the procedures, lists of equipment shutdown actions in training manuals or system design documents, annunciator responses that call for shutting down equipment to protect it (such as a high temperature alarm/indication on a pump motor), or other sources. The aim of the search is to both identify such unsafe actions and the associated instrumentation or diagnostic equipment whose failure or spurious operation could induce such actions. Where identified, the associated instrumentation or diagnostic equipment should be added to the Fire PRA Equipment List.

To place some practical, yet reasonable limitations on the performance of this search, the following represent typical considerations that are recommended (see **Appendix 2A** for more on this subject). The analyst may desire to use these or other considerations when performing this search. Whatever approach is used, or if disposition of other or unique situations is necessary, that approach or dispositions should be documented.

- Equipment already on the Fire PRA Equipment List need not be cited again *if* the same reason as that cited above, applies (i.e., the cable identification process and the circuit analysis will address all failure modes of mitigating equipment based on normal, desired, and failed states considered, including possible spurious operation of associated instrumentation, such as if it is used in both the automatic control of an equipment item as well as for operator action). However, since this is from an operator action point of view, explicit listing of the instrument may still be desirable and is recommended.
- In the search for possible harmful spurious operating instrumentation or diagnostic equipment, the instrumentation is assumed to be in its normal configuration and not in an unusual line-up, such as during test and/or maintenance, as long as the time in these less usual configurations is small (e.g., ~1%) relative to the time it is in its normal configuration. *Note: future significance determination process (SDP) or other evaluations involving unusual configurations or misalignments will then need to be separately analyzed.*
- Focus should be on the instrumentation with little redundancy to prevent the unsafe act and which upon spurious or failed operation leads to the unsafe action directly, with no or little alternate verification steps.

- Where the possible spurious or failed instrumentation would dictate the operator first verify the plant condition by local observation or other very reliable means before making the unsafe act, such spurious or failed equipment is not considered further, nor are they added to the Fire PRA Equipment List if the HRA input can provide reasonable justification that such precautions will be taken even during fire situations. For example, if an annunciator response procedure calls for shutting down a pump at a high room temperature alarm/indication, but only after a local check by an operator to verify the true environmental condition, spurious operation of that alarm/indication circuit(s) would not be considered further if the HRA analyst(s) deems that such precautions would continue to be taken even under complicated and potentially confusing or high workload fire situations.
- Where it would take considerable redundant and particularly diverse indications to spuriously operate or fail simultaneously to induce the undesired/unsafe action, such spurious or failed equipment is not considered further, nor are they added to the Fire PRA Equipment List if the HRA input can provide reasonable justification that such failures would not likely cause harmful operator actions in fire situations. For example, if, in order to isolate feed to a steam generator, the operator would have to have erroneous indications of two channel steam generator pressure indications, as well as erroneous confirmation by such indications as multiple channel RCS temperature indications, the possibility of the combined situation is considered very unlikely. If, in addition, the HRA analyst(s) can justify it is highly unlikely the operators would make a mistake (such as due to tunnel vision on one set of indications) for the given situation, this equipment need not be considered further and is not added to the Fire PRA Equipment List.
- Be careful to examine electrical equipment that may not necessarily be associated with equipment already on the Fire PRA Equipment List, but which could cause an undesirable operator action, such as level instrumentation on a tank, temperature monitoring of a heat exchanger or filter, or a flow or pressure indication in a system flow path. If spurious operation of this electrical equipment could induce an undesired/unsafe operator action (e.g., shutdown of the flow path), that electrical equipment should be added to the Fire PRA Equipment List.
- Be careful to consider inter-system effects. For example, a spurious indication that low pressure pumps have been lost during recirculation core cooling in a PWR and yet they are needed to provide NPSH to the high pressure pumps in this mode. This could induce the operator to shut down the high pressure pumps inappropriately to protect them, when in actuality, both the low pressure and high pressure pumps are operating properly.

2.5.6 Step 6: Include "Potentially High Consequence" Related Equipment

As a final step in performing this task, it is recommended that equipment associated with potentially high consequence events not be prematurely screened, but analyzed in more detail.

High consequence events are those involving:

1. *A single component or multiple components* whose failure or spurious operation could, due

   (a) to potential commonalities among the equipment (e.g., a common power supply or shared cabling or circuit), or

(b) common cause considerations of "like" equipment as considered in the Internal Events PRA (e.g., two valves in the same system), or

(c) the simultaneous occurrence of independent failures,

occur with a frequency of more than 1E-7/yr considering the fire event (frequency, severity, suppression) as part of this frequency[1], and cause an event that could lead directly to core damage and containment failure or bypass, or

2. *A single component* whose failure or spurious operation is estimated to occur with a frequency of more than 1E-7/yr considering the fire event (frequency, severity, suppression) as part of this frequency, and could fail an entire critical and necessary safety function (e.g., RCS inventory) and whose failure, by itself, would lead directly to core damage.

Equipment associated with such events, if not already on the Fire PRA Equipment List, should be added to the list and analyzed accordingly.

An example could be the spurious opening of a high-low pressure interface (if still powered) within a system (e.g., RHR) that might lead directly to core damage and provide a containment bypass pathway for any release. Another example could be the spurious opening of a single valve causing draining of a RWST and loss of all injection when it is needed, and hence core damage.

It is recommended that such situations be analyzed (i.e., added to the equipment list, cables identified, and the circuits analyzed) so that these situations are not prematurely and *a priori* dismissed based on unsubstantiated assumptions about their importance or lack thereof. In this way, potential high consequence events will be examined in more detail and screened out as unimportant only after a level of review commensurate with the potential consequences of such an event.

2.5.7 Step 7: Assemble Fire PRA Equipment List

Once the previous steps have been performed, a cumulative list of all the associated equipment identified in the above steps is generated. This list becomes the Fire PRA Equipment List and is maintained in the Fire PRA database.

A typical Fire PRA Equipment List should include the following information (as applicable):

- Equipment ID (note: this may be an indicator or alarm, as discussed above),
- Equipment Description,
- System Designation,
- Equipment Type,

[1] At this stage of the process, fire frequencies, etc. may not have been analyzed and thus definitively determined. "Estimates" of the necessary frequencies and probabilities will likely have to be made based on combined approximations/judgments from the fire modeling, cable analysis, and PRA analysts, as appropriate.

- Location (i.e., Compartment Identification),
- PRA Event Identifier,
- PRA Event Description,
- Normal Position/Status,
- Desired Position/Status,
- Failed Electrical Position,
- Failed Air Position,
- References, and
- Comments/Notes.

The Fire PRA Equipment List will be used in Task 3 for selecting critical cables associated with the equipment. The above information is put into the Fire PRA Database (see Support Task B). It also serves as a basis for creating the Fire PRA Model (Task 5).

To the extent that analysts have chosen to not model all that is in the Internal Events PRA for their Fire PRA (such a decision is not recommended in this procedure, but certainly allowed because of resource expenditure concerns and/or other reasons), the Fire PRA Equipment List will likely not contain all that would be present if all the Internal Events PRA equipment were also included. Should the resulting Fire PRA CDF/LERF or other results be considered inadequate (e.g., too high) and it is desired later to expand the equipment list and model more of that credited in the Internal Events PRA, the equipment list from the full Internal Events PRA is readily available. This information, along with insights from the Internal Events PRA as to which equipment may provide the most desirable impacts on the Fire PRA results (such as through importance measure calculations or sensitivity analyses), can be used to help prioritize which additional equipment should be included in the Fire PRA. If/when subsequently adding this equipment, it should be remembered that these and other tasks will need to be revisited to determine the impacts of adding the equipment.

2.6 Uncertainty

An important aspect of the Fire Risk Requantification effort is the identification, and where possible, inclusion of uncertainties in the fire risk results. The product of Task 2 is the Fire PRA Equipment List, i.e., the equipment for which cabling information is needed and will be considered in development of the Fire PRA Model. As such, Task 2 contributes a number of uncertainties to the process, all of which can be categorized under modeling uncertainty. That is, there is the overall uncertainty as to whether the Task 2 result is sufficiently accurate and complete so as to contain all the necessary equipment to be considered and that may need to be modeled to not miss important fire risk contributors.

This overall uncertainty takes on many forms in the development of the Fire PRA Equipment List. The most significant are:

- The underlying uncertainties associated with the Internal Events PRA upon which the Fire PRA Equipment List is largely based. In particular, whether the Internal Events PRA, with all its uncertainties and assumptions, as modified by this procedure, is a sufficient base to develop the Fire PRA Equipment List;
- The uncertainty and associated assumptions with regards to a sufficiently complete incorporation of PRA sequences, including fire-induced initiators (e.g., is it appropriate to eliminate fire-LOCA sequences?), as well as any new types of scenarios unique to fires, so as to contribute the most complete Fire PRA Equipment List;
- The uncertainty with regards to a sufficiently detailed identification of the equipment so that equipment locations are not overlooked. For example, identifying a pump as an equipment item may not be adequate, because if the analyst were to list the pump and its power breaker separately, the two different room locations will less likely be missed. Any related assumptions such as assuming a fire will cause a loss of service water as an initiator in a given compartment, can also add to the uncertainty;
- The uncertainty with regards to adequate identification of those equipment items and associated (including analysis assumptions) spurious actuations or failures of equipment that can affect the safety functions of interest;
- The uncertainty with regards to adequate identification of other equipment items, as well as instrumentation and diagnostic equipment, and associated failure modes of concern (including analysis assumptions), so that spurious actuations or failures that can affect human actions of interest have been adequately considered; and
- The uncertainty with regards to the plant configuration and status of equipment at the time of the fire. Examples include pump running or stopped, valve open or closed, relay contact open or closed, swing-pump fed from A or B switchgear, letdown train A in service - train B isolated or vice versa, service water aligned in winter or summer mode, etc. Furthermore, the assumption that components are not in a test/maintenance configuration beyond that statistically accounted for in the Internal Events PRA also adds to the plant configuration uncertainty. In some cases, this uncertainty might be captured by not initially assuming the component is in a particular state/configuration. The component (and support components) needed to achieve the desired safe shutdown from either initial state/configuration could then be included.

This procedure involves primarily a deterministic (not probabilistic) process, with judgments often having to be made to arrive at the list of equipment for the Fire PRA. As such, the key to addressing the uncertainty in both the accuracy and completeness of the Fire PRA Equipment List is in peer review of the equipment list and any associated justifications for including or eliminating controversial equipment from the list.

Hence, peer review is the key to making this uncertainty as small as reasonably achievable. Any controversial items should be thoroughly discussed and a “best-estimate” decision made regarding inclusion/exclusion of the subject item. Documentation of any justification for this inclusion/exclusion is highly recommended, as it is the means to capture those judgments (where uncertainty exists as to the appropriateness of inclusion or exclusion of an item) upon which the equipment list is based.

With the exception that, in a few cases, sensitivity analyses could be used to determine the importance of adding (or excluding) a controversial equipment item to the Fire PRA Equipment List, the above uncertainties are expected to be addressed through the peer review. Technical reviews are expected to address the above uncertainties so that the final Fire PRA Equipment List represents a consensus of what should be included. No quantitative assessment or probabilistic treatment of these uncertainties is expected, with the exception of a few sensitivity studies, if appropriate.

2.7 References

2.1 *Fire PRA Implementation Guide*, December 1995. EPRI TR-105928.

2.2 "Guidance for Post-Fire Safe Shutdown Analysis," Nuclear Energy Institute, NEI 00-01, Revision 0, May 2003 (Document available through the NRC Agency-wide Documents Access and Management System (ADAMS), Accession Number ML031640322).

3
FIRE PRA CABLE SELECTION (TASK 3)

3.1 Purpose

Conducting a fire PRA in accordance with this procedure necessitate an analysis of fire-induced circuit failures beyond that typically conducted during original Fire PRAs. The circuit analysis elements of the project are conducted in three distinct phases:

- Fire PRA cable selection (Task 3),
- Detailed circuit failure analysis (Task 9), and
- Circuit failure mode likelihood analysis (Task 10).

This chapter provides methods and instructions for conducting the first phase of circuit analysis–selecting fire PRA cables (Task 3). The purpose of Task 3 is to determine, for all fire PRA components, the routing and location of circuits/cables[1] associated with the components. These relationships can then be used to determine the fire PRA components potentially affected by postulated fires in different plant locations.

Depending on the format and availability of circuit data and cable location information, it may be advantageous to perform Task 3 (cable selection) and Task 9 (detailed circuit analysis) at the same time.

3.2 Scope

Chapter 3 provides approaches and technical considerations for identifying cables to be included in the Fire PRA Cable List. This task contains the following key elements:

- Identify cables associated with fire PRA equipment,
- Determine plant routing and location for the fire PRA cables,
- Identify fire PRA power supplies, and
- Correlate fire PRA cables to fire PRA equipment and plant locations (fire compartment and/or fire area).

[1] The term "circuit" and "cable" are often used interchangeably for fire-related circuit analyses. A circuit is comprised of electrical components, subcomponents, and cables/connection wire. Within the context of fire-induced equipment failures, it is understood that circuit selection or circuit identification refers to the identification of cables that connect all the related components and subcomponents of a complete circuit.

Implementation of plant-specific quality assurance requirements or configuration control issues that might apply is not within the scope of this task. Nor does this task address validating the accuracy of plant-specific data extracted from plant drawings, documents, or databases. Each plant should follow appropriate quality assurance, administrative, and configuration control procedures applicable to the work conducted. The need to validate input source documents should be addressed as part of assembling the prerequisite information.

3.3 Background Information

3.3.1 General Task Objectives and Approach

The Fire PRA Cable List identifies the circuits/cables needed to support proper operation of equipment contained in the Fire PRA Equipment List. Essential electrical power supplies are also identified during this task. The Fire PRA Cable List might also include Associated Circuits. Associated Circuits are cables that are not necessarily directly linked to a component, but have the potential to cause improper operation of a component as a result of certain failure modes associated with fire-induced cable damage.

The Fire PRA Cable List is not simply a list of cables. It also establishes, for each cable, a link to the associated fire PRA component and to the cable's routing locations. These relationships provide the basis for identifying potential equipment functional failures at a fire area, fire compartment, or raceway level.

Task 3 is broken down into six distinct steps. Generic step-by-step instructions for completing these steps are provided in this chapter. Figure 3-1 shows a summary of the task work flow. A critical aspect of creating the Fire PRA Cable List is preplanning. Experience shows the importance of developing a clear strategy and detailed plant-specific rules for selecting cables. This is true whether cable selection is based on existing analyses (e.g., Appendix R of 10 CFR Part 50 circuit analysis, original Fire PRA, etc.) or will be generated from scratch. Also of key importance is assessing up front the degree to which cable and raceway data has been automated, so that cable-to-raceway and raceway-to-location correlations can be obtained through database sorts and queries. This capability is essential to conducting a Fire PRA using the methods of this procedure. Plants without this capability should include in the project resource estimate a realistic projection of the level-of-effort necessary to acquire this capability, which can be substantial, depending on the actual information available.

3.3.2 Assumptions

The following assumptions form a basis for this task:

- A cable raceway database system is in place and available to identify cable/raceway routings. The ultimate usefulness of the database to support this task will vary depending on the inherent functionality of the database;
- An Appendix R of 10 CFR Part 50 analysis for the plant has been completed and documented, and is applicable for helping identify cables associated with fire PRA equipment. The degree of applicability will vary depending on the plant-specific approach used for the Appendix R of 10 CFR Part 50 circuit analysis;

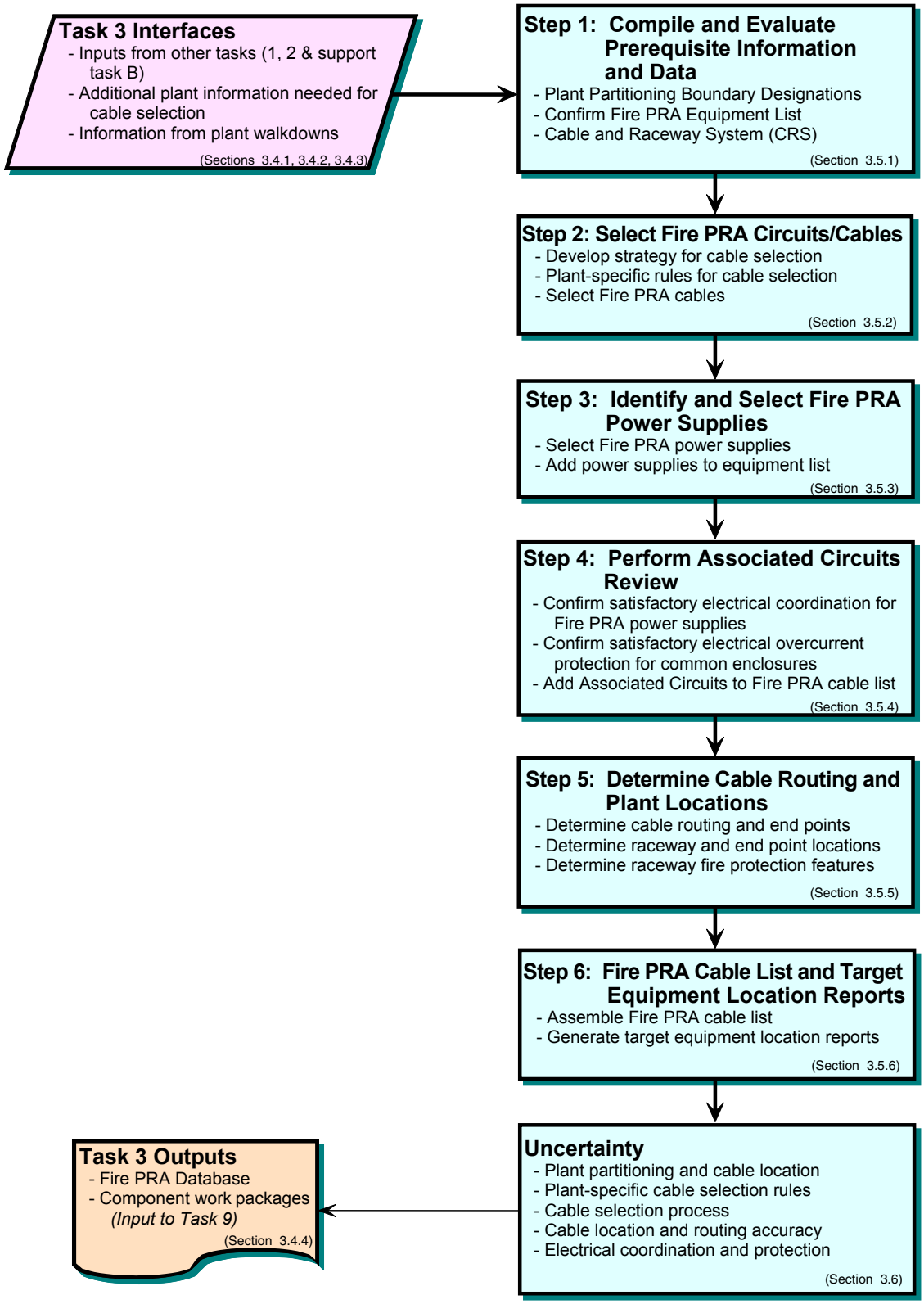

Figure 3-1
Fire PRA Cable Selection Process

- Equipment is assumed to be in its normal expected position or condition at the onset of the fire. In cases where the status of a component is indeterminate or could change as a result of expected plant conditions, the analysis should assume the worst-case initial conditions for the purpose of cable selection;
- Properly sized and coordinated electrical protective devices are assumed to function in accordance with their design tripping characteristics, thereby preventing initiation of secondary fires through circuit faults created by the primary fire; and
- Users of this procedure are knowledgeable in the theory and principles of electrical power and control circuits, and have practical experience with nuclear power plant circuit schemes, power distribution systems, and cable and raceway routing systems. Work under this procedure is assumed to be conducted by or supervised by personnel familiar with circuit failure analysis methods (i.e., Appendix R of 10 CFR Part 50 safe shutdown analysis or similar).

3.4 Task Interfaces

3.4.1 Input from Other Tasks

3.4.1.1 Plant Boundary Definition and Partitioning (Task 1)

This task needs, as a prerequisite, the plant partitioning boundary definitions and fire compartment designations from Task 1, Plant Boundary Definition and Partitioning. This information is used to correlate cable routing to specific plant locations. As a minimum, cables should correlate to plant fire areas. Ideally, the cables will correlate to the established fire compartments.

3.4.1.2 Fire PRA Components Selection (Task 2)

This task needs, as a prerequisite, the list of fire PRA equipment from Task 2, Fire PRA Components Selection. The Fire PRA Equipment List serves as the starting point for cable selection. The primary objective of Task 3 is to identify circuits/cables associated with the fire PRA components for the purpose of identifying potential equipment failures on a compartment and fire scenario basis.

3.4.1.3 Fire PRA Database System (Support Task B)

The Fire PRA Database System (or equivalent database system) is a prerequisite for this task. The database system provides a structured framework for capturing and maintaining Fire PRA data. The database system is populated with the data and information generated by this task, which is then complied to generate the Fire PRA Cable List and accompanying relationships. The data structure and functional relationships established within the database system are specifically designed to maintain data integrity and provide the necessary sort and query capability to conduct compartment and scenario CCDP and CLERP calculations.

3.4.2 Additional Plant Information Needed to Support this Task

3.4.2.1 Plant Cable and Raceway Data System

This task needs basic cable routing and cable location information from the plant CRS database or other sources, as applicable. The availability of readily retrievable cable routing and cable location data will significantly impact the analysis strategy and level of effort needed to complete this task. Manually determining cable routing and locations from plant drawings and/or walkdowns is extremely resource intensive. Plants that do not have cable routing and location data in an automated database format should carefully consider, in the planning stage, the additional resources needed to obtain this information. In this situation, it is recommended that some amount of detailed circuit analysis be conducted as a part of cable selection to minimize the number of cables requiring manual routing.

3.4.2.2 Plant Appendix R of 10 CFR Part 50 Safe Shutdown Analysis

Given the substantial overlap between the Fire PRA Equipment List and Appendix R of 10 CFR Part 50 Safe Shutdown Equipment List, the Appendix R of 10 CFR Part 50 circuit analysis information should be used to the maximum extent possible to develop the Fire PRA Cable List. The approach and methods used for the Appendix R of 10 CFR Part 50 cable selection will likely differ to some extent from that developed for the Fire PRA. These differences should be well-understood to ensure the Appendix R of 10 CFR Part 50 cable set is augmented as necessary to meet Fire PRA objectives (indication circuits, annunciation circuits, and automatic start features are examples of circuits generally not selected by Appendix R of 10 CFR Part 50, but might be necessary to meet Fire PRA criteria).

3.4.2.3 Other Information and Data

1. Component elementary circuit diagrams
2. Component cable block diagrams
3. Component wiring/connection diagrams
4. Electrical distribution system single-line diagrams.
5. System piping and instrument diagrams (P&IDs)
6. Instrument loop diagrams and block diagrams
7. Cable raceway schedules and routing drawings
8. Equipment location and layout drawings
9. Electrical distribution system protective device coordination studies/calculations
10. Electrical distribution system short circuit and equipment rating studies

3.4.3 Walkdowns

Plant walkdowns are not considered a fundamental part of this task. Rather, plant walkdowns should be considered on a case-by-case basis as a way of obtaining necessary information about cable and/or raceway locations.

3.4.4 Outputs to Other Tasks

The specific work products generated by this task are:

- Fire PRA Cable List (input into the Fire PRA Database),
- Fire PRA Power Supply List (input into the Fire PRA Database),
- Associated circuits review, and
- Component analysis work packages (optional).

Developing the Fire PRA Cable List is an essential prerequisite for conducting both qualitative and quantitative screening. The cable list, as input into the Fire PRA Database, provides the functional and spatial relationships that allow potential equipment failures to be identified on a compartment- and fire-scenario level.

Using the Fire PRA Database (which has been populated with the Fire PRA Equipment List and Fire PRA Cable List), Target Equipment Location Reports can be produced for use in compartment-level and scenario-level quantitative screening activities (Task 7). Additionally, Task 3 identifies any essential electrical power supplies not previously identified in Task 2. It is highly recommended that component analysis work packages be generated as part of this task. The electrical analysis work packages are useful later during detailed circuit failure analysis (Task 9) and circuit failure mode likelihood analysis (Task 10).

3.5 Procedure

The steps described below provide detailed methods for developing the Fire PRA Cable List and supporting data. Although the instructions cover all aspects of the work, **it is likely that many elements will already be available from previous efforts, such as the Appendix R** of 10 CFR Part 50 **analysis or original Fire PRA**. Specifically, how existing analyses and data will be incorporated into the Fire PRA analysis should be thought through carefully during the planning stages. It is strongly recommended that additional plant-specific cable selection “rules” be developed before beginning work. Plant-specific rules are important to further customize the cable selection methodology to fit the specific circumstances and needs of each plant. The plant-specific rules will also foster consistency between different analysts. As an example, specific rules for addressing status indicators large pumps might be appropriate to ensure consistency.

3.5.1 Step 1: Compile and Evaluate Prerequisite Information and Data

The purpose of this step is to ensure that prerequisite information and data is available and usable before beginning fire PRA cable selection. Beginning the process of cable selection without first having the prerequisite information will reduce efficiency and significantly increase the likelihood of rework.

3.5.1.1 Step 1.1: Confirm Plant Partitioning Boundary Designations

Confirm that the plant partitioning boundaries and designations have been identified and input into the Fire-PRA Database (Output from Task 1, Plant Boundary Definition and Partitioning). Consider the following factors in conducting the verification.

1. As a minimum, fire areas should be correlated with the raceway/cable locations. To the degree practical, cable locations should be aligned with the plant fire compartments. If the cable/raceway-to-fire compartment correlations do not match, compartment-level evaluations will be more difficult and resource-intensive. For example, if the raceway location information is based on Fire Area but the Fire PRA partitioning is based on fire zones or rooms (subsets of fire areas), the Fire PRA Database System (Support Task B) will not be able to develop the necessary correlations for compartment-level losses.
2. The plant partition data should include a correlation to plant fire areas so that fire-area-level analyses can be conducted, if desired.

3.5.1.2 Step 1.2: Confirm Fire PRA Equipment List

Confirm that the Fire PRA Equipment List has been developed and input into the Fire PRA Database, including equipment identifiers, attributes, and functional requirements (Output from Task 2, *Fire PRA Components Selection*). Consider the following factors in conducting the verification.

1. Since identification of fire PRA cables does not involve a detailed functional failure analysis of the circuit, it is not mandatory that component position information be available to complete this task, unless the detailed circuit analysis (Task 9) is conducted as part of cable selection.
2. Development of the Fire PRA Equipment List is an iterative process. Thus, it is expected that components will be added or removed during the course of conducting the Fire PRA. The list, however, should be substantially complete before beginning cable selection to ensure major conceptual changes do not result in inconsequential work (e.g., conducting cable selection for an entire system that is ultimately not credited in the PRA model).
3. Depending on the PRA Model, some components may show up in the Fire PRA Equipment List more than once if they have multiple PRA event functions. For example, the PORVs might have two PRA event functions–a function to remain closed for primary inventory control, and a function to open on demand for depressurization capability. A determination should be made at this point whether separate circuit analyses will be conducted for the different events.
4. The Fire PRA Equipment List should specify any unique requirements for additional or supplemental indication, alarm, annunciation, or functionality that deviates from generic rules and methods. For example, the analysis might establish a generic position that annunciation and alarm circuits are not included unless specifically identified due to a human factors concern. On this basis, the cable selection process would not routinely include annunciation and alarm circuits. Rather, these circuits would only be included on a case-by-case basis, as specified by the fire PRA Equipment List.

5. The fire PRA component selection process of Task 2 will identify most high-level power supplies. However, additional, less obvious, power supplies will inevitably be identified during the cable selection process. These power supplies should be added to the Fire PRA Equipment List and circuit analysis conducted.

3.5.1.3 Step 1.3: Cable and Raceway System

Determine the extent to which the CRS database can be used for automated lookups of cable routing and raceway location data. Manual tracking of cable routing and location data is extremely labor-intensive and should be avoided to the extent possible. Consider the following factors in reviewing CRS capability.

1. Determine if cable routing and location information is available in the CRS and readily retrievable via database query. The availability of readily retrievable cable routing and location data will significantly impact the analysis strategy and level of effort necessary to complete this task. Manually determining cable routing and location from plant drawings and/or walkdowns is extremely resource-intensive. Plants that do not have cable routing and location data in an automated database should carefully consider, in the planning stage, the additional resources needed to obtain this information. In this situation, it is recommended that some amount of detailed circuit analysis be conducted as a part of cable selection to minimize the number of cables requiring. Also confirm that the data has been maintained accurately and up-to-date. If not, use of the data should include some verification.
2. Establish a plan for addressing missing data, including drawing reviews, conservative assumptions, and field walkdowns. If engineering judgment and/or assumptions are employed, the uncertainty and sensitivity associated with the decision should be established and rolled up into the overall uncertainty analysis for the project.
3. Determine the extent to which Appendix R of 10 CFR Part 50 cable routing information can be used for this study. The Appendix R of 10 CFR Part 50 data will not likely satisfy all requirements, since it is expected that the Fire PRA Equipment List will contain more equipment than that covered by Appendix R of 10 CFR Part 50. Nonetheless, the Appendix R of 10 CFR Part 50 data can prove helpful in completing this task.
4. Devise a plan/process for downloading and/or accessing cable and raceway data before beginning the cable selection process.
5. Determine the extent to which raceway layout drawings can be used to precisely locate raceway and cables within fire compartments (fire areas, fire zones, and rooms), and the raceway's exact placement with respect to fire hazards in the rooms. Are the drawings "diagrammatic" (field routed with exact location not shown), or are the actual raceway locations shown with some degree of precision specified (ex., ± 3-foot for Safety-Related, ± 5-foot for non-safety)? This will determine the extent to which drawings can be used to locate cable and raceway targets vs. plant walkdowns.

3.5.2 Step 2: Select Fire PRA Circuits/Cables

The purpose of this step is to identify the cables associated with each component on the Fire PRA Equipment List. The necessary level of effort and inherent nature of this task will vary greatly depending on the availability of cable location data and usability of Appendix R of 10 CFR Part 50 circuit analysis information. The goal here is to develop a strategy that best leverages available information so as to conduct this task as efficiently as possible.

The cable selection process provided here assumes that three distinct cases will arise.

Case 1: The component of interest is an Appendix R of 10 CFR Part 50 safe shutdown component and thus has previously undergone a circuit selection process. Cable data is readily available, including cable routing and location information.

Case 2: The component is not an Appendix R of 10 CFR Part 50 safe shutdown component and has not previously been analyzed to identify cables needed for its proper operation. Although the component has not undergone circuit analysis, cable routing and location data is readily available from the plant CRS database.

Case 3: The same as Case 2, except cable routing and location data is not readily available from the plant CRS database. Determining cable location will involve manual drawing reviews and/or walkdowns.

Experience indicates that the Fire PRA Equipment List will contain components not included in the Appendix R of 10 CFR Part 50 safe shutdown equipment list. Thus, the number of “new” components to analyze should be determined early in the planning process so that reasonable estimates for resource requirements can be established.

3.5.2.1 Step 2.1: Develop Strategy for Cable Selection

The first step in conducting cable selection is to develop a comprehensive strategy and approach for conducting the analysis. The following factors should be considered.

1. Coordinate with the systems analysts to determine plant-specific rules for indication, alarm, annunciation, and automatic initiation features. The purpose of this step is to ensure complete alignment between the assumed component functionality and the rules developed for cable selection. Experience indicates that a hands-on walkthrough of several components is highly beneficial in flushing out details that should be considered when developing the cable selection rules.
2. To what extend can the Appendix R of 10 CFR Part 50 circuit analysis data be used? To make this determination, it is necessary to fully understand the analysis approach used to create the original cable set for each component and compare this to the criteria established for the Fire PRA. Determine the level of effort necessary to augment or modify the original cable selection, if at all, to conform to the Fire PRA criteria. Experience indicates that a hands-on review of several components is helpful in revealing differences that should be considered in developing a strategy.

3. Compare the Fire PRA Equipment List to the Appendix R of 10 CFR Part 50 Safe Shutdown Equipment List to determine the number of fire PRA components that are not covered by an Appendix R of 10 CFR Part 50 circuit analysis. This will help determine the number of component that will need a "new analysis." *Do not overlook this step; it has a significant impact on the level of effort necessary to complete this task.*
4. Decide if cable routing and location correlations will need to be determined by manual drawing reviews and/or walkdowns. If so, it is recommended that the detailed circuit analysis (Task 9) be conducted as a part of cable selection to minimize the number of components that need to be manually routed.
5. Some plants have conducted circuit analysis (in whole or in part) by the exclusion approach, i.e., confirmation that cables are not routed through a selected area. In this case, the availability of equipment should be "hard-wired" into the PRA model for the affected areas. This approach can be highly effective in the initial screening process if screening depends only on a few critical components.
6. Determine how off-site power will be included into the analysis. The cable selection for off-site power can be extensive and complex. Accordingly, the cable selection plan should address this aspect of cable selection up front. In some cases, it might be appropriate to create a "virtual" component that includes all cables for a specific off-site power feed. For other plants, including the off-site power components (switchgear, circuit breakers, transformers, etc.) individually might be more favorable. If an off-site power study has already been completed, an alternative approach is to simply hard-wire a loss of off-site power in the PRA model for the affected areas. This approach would eliminate the need to add the off-site power equipment and cables into the Fire PRA database. The off-site power analysis is generally one of, if not the most, complex circuit analysis. Experience shows that this analysis is most efficiently completed by an experienced engineer with a good working knowledge of the system. Regardless of the approach selected, the key is to address the issue up front before conducting the cable selection.
7. Past conservative assumptions should be revisited to determine their validity and appropriateness within the context of a Fire PRA. In many instances, highly conservative assumptions overly penalize the analysis. For example, assuming a loss of off-site power for all locations containing 4.16 kV cables is highly conservative and does not yield realistic results. Since off-site power is quite influential in the final CCDP values, it is usually worth refining the analysis in lieu of running with an overly conservative assumption.
8. Determine how the cable selection process will be documented. It is often useful to create an analysis package for each component. The analysis package should contain all the necessary references to perform the cable selection. The requisite level of detail to be documented should be clearly established, including the rationale for selecting or excluding specific cables. Analysis packages will also save time and effort for those components in which a detailed circuit failure analysis is needed. If drawings and plant documentation are readily available on-line it might not be beneficial to create a full analysis package as part of this task. In either case, the basis for cable selection should be readily apparent to an independent reviewer.

3.5.2.2 Step 2.2: Develop Plant-Specific Rules for Cable Selection

Once a strategy and approach for conducting the cable selection has been established, it is necessary to translate the approach into specific "rules" that will help determine which cables are to be classified as fire PRA cables. The benchmark for these rules is that independent review by different analysts should result in identical cable selection. In developing plant-specific cable selection rules, consider the following:

1. The selection of cables should be driven by a functional relationship to the component under review. Any cable that can affect the operation of a fire PRA component should be designated a fire PRA cable for that component. In general, all cables should be associated with the primary component listed in the Fire PRA Equipment List. Do not add circuit subcomponents (relays, switches, sensors, modules, gauges, meters, etc.) to the equipment list; they are incorporated automatically into the failure analysis by identifying the fire PRA cables to which the subcomponents are connected.
2. The Appendix R of 10 CFR Part 50 analysis may have more descriptive cable classifications than those typically used in Cable and Raceway databases (ex., Power, Control, Indication, Instrument, Control Power, Spurious) that reflect the possible effects the cables' failure may have on associated equipment. These classifications can be helpful in quickly determining the general effects that a cables failure can have on the associated component. Where this Appendix R of 10 CFR Part 50 information exists, it should be carried forward into the Fire PRA database to minimize the effort later in determining cable failure effects on equipment (prevents rework).
3. Consistent with Item 1, above, for components directly supplied from power circuit breakers or motor control centers, it is best to associate the circuit breaker and/or motor starter control circuits with the primary component, instead of adding the circuit breaker as a separate component. Include in the cable selection the feeder/branch power cable(s) supplying the component, but do not include power cables supplying the power supply itself. This approach helps keep the equipment list to a manageable size and maintains a focus on the primary components. Rules should also address inclusion of protective circuits associated with the circuit breaker.
4. For spurious-only equipment in which power is not needed for the component to perform its desired function, it recommended that cable selection only include cables that could spuriously energize the component. In effect, for spurious-only components, it is recommended that the detailed circuit analysis (Task 9) be conducted coincident with cable selection (Task 3). Similarly, the power supplies for these components should not be identified as essential power supplies. The basis for this recommendation is that spurious operation components tend to overwhelm the initial Fire PRA analysis screening. Thus, it is best to minimize the impact of these components from the start.
5. In developing analysis rules for three-phase proper polarity hot shorts, three cases should be considered.

Case 1: Grounded AC system with thermoset-insulated cable. Three-phase proper polarity hot shorts are evaluated as extremely low probability events for grounded three-phase AC power systems. Based on observed characteristics and behavior of fire-induced cable failures, an estimated upper bound on the probability of occurrence for a three-phase circuit utilizing thermoset-insulated triplex cable located in a typical cable tray or conduit is 5E-8/yr. This bound considers:

- The likelihood of multiconductor-to-multiconductor hot shorts for thermoset-insulated cable,
- The likelihood of concurrent and independent phase faults,
- The likelihood of phase faults of the proper polarity, i.e., phase rotation, and
- Typical fire ignition and severity frequencies, and suppression failure probabilities.

On this basis, the three-phase proper polarity hot short failure mode is not considered risk significant in accordance with the defined screening criteria of 1E-7/yr for "potentially high consequence equipment", as defined by Section 2.5.6 of Chapter 2. It is recommended that this failure mode not be included in the fire PRA cable selection process for grounded three-phase AC circuits involving thermoset-insulated cable.

Case 2: Ungrounded AC system or thermoplastic-insulated cable. The evaluation of ungrounded systems and thermoplastic-insulated cable is less certain than the evaluation for Case 1 due to the scarcity of data. Nonetheless, with an understanding of the general principles and phenomena involved, it can be reasoned that the failure mode has a low probability, but not as low as that for grounded systems with thermoset cable. On this basis, it cannot be conservatively argued that the failure mode likelihood is below the 1E-7/yr screening criteria established for "potentially high-consequence equipment." Accordingly, for these cases, it is recommended that three-phase proper polarity hot shorts be considered for high consequence equipment in which one or more component failures leads directly to: (a) core damage and containment failure or bypass, or a single component failure or (b) fails an entire critical and essential safety function (e.g., RCS inventory) whose failure would lead directly to core damage, as described in Section 2.5.6.

Case 3: Armored cable or cable in dedicated conduit. Three-phase proper polarity faults are not considered credible for armored power cable or a single triplex cable in a dedicated conduit. The basis for exclusion is that multiconductor-to-multiconductor hot shorts are not possible given the intervening grounded barrier (i.e., the armor or conduit).

6. A challenging area for consistency and accuracy is how to address auxiliary contacts for interfacing equipment (i.e., interfacing circuits in the form of interlocks, permissives, auto-control functions, etc.). The following methods are suggested; however, each plant should customize the approach to their specific circumstances.

   - If the auxiliary contacts are associated with a component that is included in the Fire PRA Cable List, it should not be necessary to duplicate the cable selection. Instead, confirm the cable selections for both components correlate with each other and that the proper component-level dependencies are established in the Fire PRA model. For example, a turbine-driven AFW pump control circuit might be integrally tied to a steam supply

valve. The steam supply valve should be included in the fire PRA equipment list and PRA Model as an essential support component for the AFW pump. Adding new equipment to the Fire PRA Equipment List and PRA Model should be a corroborative effort between the electrical and system analysts;

- If the auxiliary contacts are associated with a "system-wide" signal (e.g., safety injection signal, containment isolation signal, etc.), include only those portions of the interfacing circuit uniquely associated with the component under investigation. The rationale here is that higher-level signal failures will affect multiple components, not just the component of interest. Such failures should be addressed on a system-wide basis, not a component-level basis, in the analysis. The objective is to include cables that, if subjected to fire-induced faults, could cause a functional problem with only the component under investigation, and thus would not be identified by the operators as a problem with the interfacing circuit. For the system-wide logic signals, it is often advantageous to create a "dummy" component for the system. In this way, the system cables can be associated with the dummy component instead of being added to each individual component affected by the system;

- If the circuit contains a complex combination of auxiliary contacts, it is usually more efficient to conduct the detailed circuit analysis (Task 9) coincident with cable selection (Task 3). In this way, the analysis can focus specifically on the failure modes of concern, which greatly simplifies the analysis of interposing contacts and minimizes the likelihood of unnecessary work;

- In some cases, normally-open relay or switch contacts may be used to form the "boundary" of a circuit, preventing expending resources modeling or locating cables that do not affect component operation. Whenever this approach is used, the analyst needs to carefully consider whether the switch or relay could change state as part of the anticipated shutdown transient (e.g., BWRs typically anticipate a low and high reactor water level, and high drywell pressure; PWRs typically anticipate low and high pressurizer level and steam generator level, and low reactor pressure);

- If the auxiliary contacts only serve to reinforce the desired functionality of a component, it is not necessary to include the interfacing component's cables; and

- If none of the above criteria apply, either add the interfacing component's cables to the analysis for the component under investigation, or add the interfacing component to the Fire PRA Equipment List.

7. An area in which traditional electrical circuit analysis might differ from the fire PRA criteria is indication, alarm, and annunciation circuits. The need for specific indication, alarm, and annunciation circuits should be clearly established before conducting the cable selection (refer to Item 1 of Step 1, above). In determining the rules for cable selection of these circuits, consider the following:

- Indication circuits whose fire-induced failure could impact functional operation of the component should be included as fire PRA circuits. These circuits are generally integral to the main control circuit. For example, the "green" and "red" indication lights that are integral to the control circuit of a typical motor operated valve (MOV) or pump circuit should be included. Another example is an ammeter or voltmeter that is supplied directly (i.e., no isolation) from the same instrument transformer that provides a signal to circuit breaker control devices, such as overcurrent relays or undervoltage relays;
- Independent valve or pump annunciation and alarm circuits should be included only to the extent specified by generic criteria or component-specific requirements. For cases in which these circuits are needed, include only those cables that could cause a malfunction to the circuit associated with the component under investigation. Cables whose failure would cause a system-wide impact do not need to be included. As an example, consider an independent alarm for a valve that receives its input signal from isolated contacts of a limit switch. The valve signal is sent to an alarm input module in the annunciator system. The input cable to the module would be considered a fire PRA cable, since its failure could cause an erroneous annunciation for the component of interest, but would not otherwise impact the annunciation system. In contrast, a cable associated with providing power to the annunciation system would not be included, because failure of this cable would cause the affected block of annunciators to fail, and thus would be recognized as a failure of the annunciator system and not the individual component;
- Include data acquisition cables associated with plant process computer and/or Emergency Plant Data Systems that are not electrically isolated from the component's power/control circuits;
- Independent ammeter or voltmeter circuits associated with large motors or switchgear that are independent of the main control circuit (i.e., the meters are supplied via isolators or independent instrument transformers) need only be included to the extent specified by generic criteria or component-specific requirements. Consideration should be given to those indication circuits that have the potential to cause adverse operator actions in the event that the circuit in question fails by falsely indicating component failure. For example, a pump motor ammeter circuit that provides status indication in the control room may fail such that it indicates a loss of electric power to the motor, thus causing the operator (either via procedure or by choice) to trip the otherwise operating pump;
- Independent overtemperature circuits for large motors should be included if the circuits are designed to initiate a pump trip. If the circuits are designed only to provide an alarm, they should be included to the extent specified by generic criteria or component-specific requirements.

8. For high-voltage buses, it is recommended that supply circuit breakers (EDG supply and off-site supply) be included on the Fire PRA Equipment List as separate components. This approach facilitates the combination of breaker positions needed to accommodate both off-site power and EDG power lineups. Plant experience has shown that this approach is also helpful for panels fed from multiple power sources that can transfer manually or automatically between sources (e.g., swing-bus, static switch, voting instrument power inverter, manual transfer switch).

9. The circuit analysis assumes a component is in its normal expected position. In some cases, this position could be indeterminate; for example, a set of pumps that are alternately in service to balance run time hours. In this case, the worst-case initial conditions should be assumed for cable selection.

3.5.2.3 Step 2.3: Select Fire PRA Cables

This step constitutes the critical element of this task. Inaccurate selection of cables will ripple through the entire PRA analysis and can result in erroneous CCDP and CLERP calculations. Consider the following factors in conducting cable selection.

- Although detailed circuit functionality and failure modes are not assessed during this phase of the circuit analysis, electrical elementary diagrams, connection diagrams, and one-line diagrams should be reviewed to ensure all fire PRA cables are identified;
- If the schematic/elementary drawings do not contain a cable block diagram, it is recommended that a cable block diagram be generated and placed in the component's "Analysis Package." Cable block diagrams are valuable tools in understanding circuit physical relationships and conductor-cable correlations. A sample block diagram is shown in Appendix B;
- To the extent possible, the Appendix R of 10 CFR Part 50 circuit analysis should be used to facilitate cable selection. However, as noted previously, it is essential that differences between cable selection methodologies be understood and reconciled;
- In documenting the selection of fire PRA cables, the corresponding source references used to obtain the information should be included. It is also important to identify any known or suspected gaps/discrepancies found in the cable information sources and recommend corrective action for future revisions.

Case 1: Incorporation of Existing Analysis

If the basis for cable selection is to be a previous analysis (e.g., Appendix R of 10 CFR Part 50 analysis), complete the cable selection process as follows.

1. Assemble applicable documentation, drawings, and database information, as necessary.
2. Based on the cable selection rules established in Step 2, above, and an understanding of any generic differences between the Appendix R of 10 CFR Part 50 analysis and Fire PRA criteria, identify cables to be added or removed from the original cable list.
3. Document the changes in accordance with the methods established during the planning phase.

Case 2: New Component Analysis–Cable Routing Data Readily Available

If the component to be analyzed has no previous analysis or if the previous analysis is based on substantially different rules, complete the cable selection process as follows.

1. Collect and assemble plant drawings, documents, and data for each component. Create analysis packages in accordance with the methods established during the planning phase.

2. Following the plant-specific rules established for cable selection, identify circuits/cables directly associated with each fire PRA component, including:
    - Power cables,
    - Control and indication cables, and
    - Instrument cables.
1. Following the plant-specific rules established for auxiliary contacts and interfacing circuits, identify circuits/cables indirectly associated with each component's operation (e.g., permissive circuits, interlocks, auto control circuits, etc.).
2. Document the cable selection in accordance with the methods established during the planning phase.

Case 3: New Component Analysis–Cable Routing Data Not Available:

Components in this category are analyzed as described in Case 2, above, except the cable selection process also includes a detailed circuit analysis based on the methodology in Task 9. In this way, the functional impact of cable failures can be compared to the desired function of the component to eliminate those cables that do not result in functional failures of concern.

The objective of conducting the detailed circuit analysis coincident with cable selection is to minimize the number of cables for which manual routing and location reviews need to be performed. Refer to Chapter 9 for direction on conducting the detailed circuit analysis.

3.5.3 Step 3: Identify and Select Fire PRA Power Supplies

This step identifies the electrical power supplies associated with each component on the Fire PRA Equipment List. The list of fire PRA power supplies is used for two purposes. First, each power supply should be included in the Fire PRA Equipment List. Secondly, each power supply needs to be reviewed for potential common power supply associated circuit concerns.

3.5.3.1 Step 3.1: Select Fire PRA Power Supplies

In conjunction with reviewing the elementary diagrams and one-line diagrams in Step 2.3, above, identify the power supply (or supplies) associated with the component and any associated system logic cabinets and instrumentation cabinets. It is advantageous to identify the power supply and the specific breaker/fuse supplying the component. If the component has no active function (e.g., solenoid whose desired position is deenergized, MOV that is not required to change state, pump that needs to be turned off), it is not necessary to include the power supply.

3.5.3.2 Step 3.2: Add Fire PRA Power Supply to Equipment List

Each power supply is considered an essential support component. As such, these power supplies should be included in the Fire PRA Equipment List and the PRA Model. Without this link established in the PRA Model, equipment failures resulting from a loss of power may be masked. In adding power supplies to the Fire PRA Equipment List, consider the following factors:

1. A majority of the fire PRA power supplies will already be included in the Fire PRA Database as a result of Task 2. In these cases, this step serves as confirmation and also identifies any secondary or alternate power supplies that might be discovered as part of the circuit analysis.
2. A circuit analysis should be performed for the power supplies. In performing the cable selection for power supplies, it is important to capture all electrical protective device circuits that could initiate a trip of supply breakers to the bus. These circuits include overcurrent trip circuits, differential trip circuits, ground fault protection, undervoltage and overvoltage circuits, etc.
3. Each power supply itself will have an upstream power supply that should be added to the equipment list, if not already there. Some power supplies (e.g., 4kv bus) may also have separate control power supplies that should be included.

3.5.4 Step 4: Perform Associated Circuits Review

This step determines whether any circuits exist that can indirectly cause a critical component failure due to a shared power supply or raceway. These "associated circuits" result from inadequate electrical coordination (common power supply associated circuit) or inadequate circuit overcurrent protection (common enclosure associated circuit). This step addresses common power supply and common enclosure associated circuits. Spurious operation associated circuits are addressed in Task 2 by adding to the Fire PRA Equipment List those components that pose a potential spurious operation concern.

In the case of common power supply associated circuits, the concern is that fire-induced damage to a non-fire PRA cable will result in a fault. If the feeder overcurrent protective devices for a power supply are not coordinated with upstream supply devices, the fault could cause the entire power supply to be deenergized.

Common enclosure associated circuits are of concern when a circuit protective device is not sufficiently rated to interrupt the fault current to which it might be subjected, or the protective device is too large to prevent thermal damage to downstream cables as a result of current flow in excess of the cable rating. In the absence of adequate electrical protection (i.e., properly sized protective relays, circuit breakers, and fuses), heat generated by fire-induced faults on nonessential cables could potentially cause a secondary fire to occur within a common enclosure (e.g., raceway, box, or panel) shared with fire PRA cables, thereby damaging the essential cables. The engineering principal at the center of concern is an overcurrent condition that allows excessive ohmic heating, which in turn raises the cable insulation temperature to a potentially unsafe level.

In most cases, the plant will have electrical design criteria and a documented electrical coordination study that provide adequate assurance against adverse effects from common power supply and common enclosure associated circuits. In this case, the intent is that existing documentation/analyses be reviewed to ensure sufficient coverage for the fire PRA analyses. This review should not be construed as requiring a complete revalidation of existing work or criteria. Each plant should evaluate their specific documentation and determine if any additional reviews are appropriate. For example, an Appendix R of 10 CFR Part 50 safe shutdown power supply (electrical panel or bus) that is covered by an existing coordination study should need no additional analysis. If, however, the fire PRA credits new equipment that is powered from a noncritical bus, and that bus has never been evaluated for proper electrical coordination, additional review is prudent.

3.5.4.1 Step 4.1: Confirm Satisfactory Electrical Coordination for Fire PRA Power Supplies

For each fire PRA power supply, confirm that electrical overcurrent protective devices are properly coordinated to achieve selective tripping between supply and feeder/branch devices. In reviewing electrical coordination, consider the following factors.

1. It is not the intent of this step to duplicate analyses that have already been completed. Rather, the goal is to confirm that existing analyses and studies satisfy baseline assumptions of the fire PRA. In most cases, electrical coordination studies will exist as part of the general plant design basis or Appendix R of 10 CFR Part 50 analysis. Thus, this step's evaluation should consist of a summary-level review of the existing calculations/analyses to identify any documented cases of noncoordination that might impact the fire PRA.
2. Acceptable coordination should be based on standard and customary electrical design practices adopted by the plant. For this screening-level review, full selective tripping should be the basis for acceptance. Presupposed manual actions to reclose breakers and cable separation analyses should not be credited at this stage (Note that these strategies are actually mitigating actions for inadequate coordination). In determining the applicable criteria, care should be exercised to reconcile any fundamental differences between current and past criteria and expectations for rigor and detail in documenting analysis results.
3. In reviewing past analyses, it is important to ensure that the coordination study encompasses not only the correct power supplies, but also the lineups credited by the fire PRA. Additionally, coordination should not be predicated on limiting fault current based on cable length. This strategy is commonly employed in Appendix R of 10 CFR Part 50 coordination studies, but it does not generically apply to fire PRA analyses, since compartment-level and scenario-level reviews are conducted.
4. Coordination issues are most likely to exist for non-safety related buses that are not credited in the Appendix R of 10 CFR Part 50 analysis.
5. Based on historic precedent, low-voltage 120 VAC and 125 VDC circuits are generally more prone to coordination problems than are higher voltage circuits due to overlapping time-current tripping characteristics of small molded case circuit breakers, circuit protectors, or fuses. Accordingly, the low voltage power supplies should be reviewed carefully.

3.5.4.2 Step 4.2: Confirm Satisfactory Electrical Overcurrent Protection for Common Enclosures Issues

Confirm that electrical overcurrent protective devices are properly rated and sized for their application. The criteria for this step are based on normal and customary electrical code requirements. In reviewing the adequacy of overcurrent protection, consider the following factors.

1. As with Step 4.1, above, it is not the intent of this step to duplicate analyses that have already been completed. The objective is to confirm that existing analyses, studies, and design practices satisfy baseline assumptions of the fire PRA. A review of common enclosure associated circuits has likely been conducted as part of the Appendix R of 10 CFR Part 50 analysis. Thus, this step should primarily involve confirmation that existing studies are adequate for the intended purpose. Any differences between existing studies and the objectives of the upgraded PRA analysis will, of course, need to be addressed.

2. Satisfactory overcurrent protection should be based on standard electrical design practices, which are generally rooted in electrical code requirements. Normal plant design policy typically ensures satisfactory overcurrent protection.
3. Plant short circuit studies generally confirm the adequacy of overcurrent protective device ratings.
4. In evaluating the adequacy of cable thermal protection, the criteria for acceptance should be based on a secondary fire concern and not simply exceeding the continuous or overload thermal limit for the cable. The continuous and overload rating of a cable are based on long-term degradation, not short-term failure.

3.5.4.3 Step 4.3: Add Associated Circuits to Fire PRA Cable List

Any circuits that do not satisfy the criteria specified in Steps 4.1 and 4.2, above, should be added to the Fire PRA Cable List. It is recommended that the cables be associated with the power supply from which they emanate so as to avoid adding the cable to every component fed from the power supply.

3.5.5 Step 5: Determine Cable Routing and Plant Locations

The purpose of this step is to determine the routing and plant location for the fire PRA cables. This step is conceptually straightforward, but can prove to be highly resource–intensive, depending on the availability and format of existing information. If a detailed circuit analysis was conducted as part of cable selection, it is only necessary to determine cable routing and locations for cables that result in functional failures of concern.

This step establishes cable-raceway-location correlations so that the plant compartments through which a cable is routed can be readily determined. The approach below assumes that cable locations are established by correlating cables to raceways and then raceways to plant locations (compartments).

In some cases, available plant data might simply correlate cables directly to locations. The process outlined below should be adjusted accordingly if this applies.

3.5.5.1 Step 5.1: Determine Cable Routing and End Points

Identify the raceways through which the fire PRA cables are routed (raceways include conduit, cable tray, junction boxes, pull boxes, panels, etc.). Also identify the end points for the cable, i.e., the cable “from” and “to” locations. Consider the following factors in determining cable routing.

1. In most instances, it is important to include cable end point locations in the routing because a cable termination can exist in a compartment with no associated raceway. For example, a cable that directly enters a control room panel via a floor sleeve. Cable end points might include junction boxes, panels, control centers, buses, load centers, and electrical penetrations, as well as the components themselves. It is suggested that the analysis document cable end points even if this information is not essential for identifying cable locations.

2. Cable routing information is generally available from the plant CRS. The process of associating raceways to cables should be automated to the extent possible. Ideally, the plant CRS information is downloaded directly to the Fire PRA Database for use, or is accessible on-line.
3. In some cases, raceway routing information may be missing or be incomplete. For these cases, walkdowns might be necessary. Any assumptions regarding routing should be assessed with respect to uncertainty in accordance with Section 3.6.

3.5.5.2 Step 5.2: Determine Raceway and End Point Locations

Identify the plant locations (i.e., compartments) in which the raceways and end points are located to establish cable-to-raceway-to-compartment relationships. Consider the following factors in determining raceway locations.

1. This information might exist in one of many different forms. Ideally, it is already contained in the plant CRS. If so, the desired correlations are obtained by simply downloading or linking to the data. The Appendix R of 10 CFR Part 50 circuit analysis might also contain raceway location information.
2. In establishing the overall cable-to-raceway-to-location relationships, it is important not to subrogate the raceway information (i.e., simply correlate cables to compartments). Although this might be more expedient, the missing raceway information will preclude the ability to conduct raceway-by-raceway fire scenario analyses, which is one of the primary objectives of the project.
3. If raceway information is not readily available in a database format, a review of plant layout drawings and, if necessary, walkdowns, will need to be conducted to obtain the needed information.
4. End point information need not be tracked if this information is not needed to identify the compartments in which the cable terminates.
5. In some cases, it may not be feasible to determine a cable's exact routing, yet possible to pin down the specific compartment through which it passes. In these cases, a dummy routing point can be established to obtain the desired correlation. The use of dummy routing points should be well-documented in the analysis. In documenting the cable routing locations, it is also important to identify any known or suspected gaps/discrepancies found in the cable information sources and recommend corrective action for future revisions. Any assumptions regarding routing should be assessed with respect to uncertainty in accordance with Section 3.6.

3.5.5.3 Step 5.3: Determine Raceway Fire Protection Features

Identify any fire protection features associated with the raceway, including fire wrap, flame-retardant coatings, barriers, shields, etc. Record this information in the Fire PRA Database, and, if possible, identify the area, zone, and room in which the protection is provided.

3.5.6 Step 6: Fire PRA Cable List and Target Equipment Location Reports

The information collected in the previous steps is entered into the Fire PRA Database, thereby establishing the Fire PRA Cable List. In entering the data into the Fire PRA Database, it is important to maintain the established data structure and relationships created for the database system. This will ensure that the essential database sort and query capability is achieved and that data integrity is maintained throughout the iterative process of conducting the evaluation.

Once the Fire PRA database is populated with the fire PRA equipment data and fire PRA cable data, Target Equipment Location Reports can be generated automatically. The Reports are a listing of equipment by compartment that is either located in the compartment or has related cables located in the compartment.

3.5.6.1 Step 6.1: Assemble Fire PRA Cable List

The following information is collected and input into the Fire PRA Database. This information, along with other support data entered into the database, is used to establish the Fire PRA Cable List.

- Cable ID,
- Associated fire PRA equipment ID,
- Cable function (e.g., power, control, instrumentation),
- Cable vias (i.e., the raceways through which a cable is routed),
- Cable end points (i.e., cable “from” and “to” points),
- Raceway locations,
- End point locations (if applicable),
- Raceway fire protection features,
- References, and
- Comments.

Appendix B contains an example of the requisite information, along with sample cable block diagrams. The information is shown as a cumulative “block” of data to illustrate the information to be collected, and does not necessarily represent the final form of the data in the Fire PRA Database tables.

3.5.6.2 Step 6.2: Generate Target Equipment Location Reports

Using the Fire PRA Database, generate Target Equipment Location Reports for all compartments. Appendix B contains an example of a Target Equipment Location Report for the sample data depicted.

3.6 Uncertainty

This section determines potential sources of uncertainty inherent in the cable selection process. There are four steps in Task 3 that conceivably contribute to uncertainty in the selection of fire PRA cables and the correlation of cables to plant locations (compartments). The nature and possible causes of these uncertainties are discussed below. Recommendations for incorporating the uncertainties into the overall analysis are discussed in Chapter 17.

The task of selecting fire PRA cables and documenting their location is a deterministic process that carries no inherent uncertainty, provided the analysis is complete and accurate. Consequently, the process-related uncertainties associated with the steps described in this task can only be estimated based on the judgment and experiences of personnel familiar with like activities (e.g., Appendix R of 10 CFR Part 50 circuit analysis) and the status of plant configuration control (accuracy of plant documents). It is noteworthy that uncertainties associated with cable selection and location will principally flow through as uncertainties associated with the results of Task 5 (fire-induced risk modeling) and Task 11 (detailed circuit failure analysis).

3.6.1 Plant Partitioning and Cable Location

The first source of cable selection uncertainty is that resulting from any discrepancies between the plant partitioning boundary designations developed in Task 1 to the cable/raceway location relationships applied in the Fire PRA Database. This mismatch can result in cable routing ambiguity, as discussed in Step 1.1.

3.6.2 Plant-Specific Cable Selection Rules

Another potential source of cable selection uncertainty may result from the development of inadequate, ambiguous, or inappropriate plant-specific rules for the selection of fire PRA cables. For example, during the development of plant-specific cable selection rules, it may be generally assumed that cables performing an apparently innocuous function (e.g., operational status indication) will not cause the component to fail, and thus need not be included in the fire PRA cable list. As a result, some cables that can affect the component's function might be inadvertently screened out prior to the qualitative and quantitative screening activities of Tasks 4 and 7. These cables would also be inadvertently omitted from the set of cables requiring detailed circuit analysis under Task 9. Task 9 involves a thorough functional analysis to determine the potential impact of cable failures on the component's functionality.

3.6.3 Cable Selection Process

The fire PRA cable selection process itself (Step 2.3) represents a potential source of uncertainty. The uncertainty associated with this step is that not all essential cables would be included in the Fire PRA Cable List. Omissions could result from using incorrect/out-of-date drawings, misunderstandings and/or incorrect interpretations of the cable selection rules, and human error, among others.

3.6.4 Cable and Raceway Routing Accuracy

Accuracy and completeness of the cable and raceway routing information used to identify the plant locations (partition areas) through which fire PRA cables are routed is a source of uncertainty (Step 5). These uncertainties may be the result of using incorrect/out-of-date CRS data, mismatches between the plant partitioning boundary designations developed in Task 1 to the cable/raceway location relationships provided in the CRS database, human error, or ambiguity in data. In resolving cable routing ambiguities, analysts may decide to make reasonable assumptions regarding a cable's routing. This approach to resolving cable routing ambiguity carries some degree of inherent uncertainty that should be addressed.

3.6.5 Electrical Coordination and Protection

Although Step 4 recommends a review of electrical coordination and overcurrent protection for fire PRA power supplies, there is a finite probability that such electrical protective devices will fail upon demand. This represents another type of uncertainty in the ability of a critical component to perform its required function. The postulated failure mode is treated as a random failure. This failure mode and associated uncertainty is accounted for in the fire PRA model as random equipment failures.

4
QUALITATIVE SCREENING (TASK 4)

4.1 Purpose

This procedure describes the criteria for qualitatively screening the fire compartments defined in Task 1.

4.2 Scope

This work package addresses the following issues in qualitative screening:

- Definition of screening criteria and basis, including definition of plant trip initiator and controlled manual shutdown;
- Reference to critical equipment list used in qualitative screening and criteria for equipment selection; and
- Discussion of the impact of plant configuration changes in qualitative screening.

In most fire IPEEE analyses, the primary containment was qualitatively screened. In this project, the examination of potential risk associated with fires in primary containment will follow steps similar to other locations of the plant.

4.3 Background Information

4.3.1 General Task Objectives and Approach

From Task 1, Plant Partitioning, a set of compartments are identified for the Fire PRA analysis. These compartments are subjected to a series of screening analyses that will determine the relative fire risk associated to each. Qualitative screening is the first of such screening analyses. It is not intended to assign risk values to particular compartments. It is intended, however, to identify those compartments where, according to a predetermined criteria, the fire risk is expected to be relatively low or nonexistent compared to others.

4.3.2 Assumptions

This task assumes that the risk (i.e., CDF and/or LERF) is low for a fire leading to a manual plant shutdown strictly as a precautionary measure.

4.4 Task Interfaces

4.4.3 Input From Other Tasks

This task needs input from the following tasks:

- Task 1: The list of fire compartments in the plant resulting from the partitioning analysis, and
- Tasks 2 and 3: Critical equipment and cables selected for the Fire PRA.

4.4.4 Additional Plant Information to Support this Task

No additional plant information is needed in support of this task.

4.4.5 Walkdowns

A formal walkdown is not necessary to complete this task. A walkdown, however, may be appropriate if the analyst needs to confirm information described in plant documents and drawings.

4.4.6 Outputs to Other Tasks

The results of this work package, partitioned unscreened fire compartments, are used in:

- Task 6: Fire Ignition Frequency, where fire frequencies are estimated for each of the unscreened fire compartments; and
- Task 11: Detailed Fire Modeling/Multicompartment Fire Scenarios. Screened compartments may be reevaluated as part of multi-compartment fire analysis.

The steps performed under this task should be documented in a work package. The work package should contain the following:

- A list of all fire compartments qualitatively screened and the basis for the for their screening, and
- A list of all the fire compartments that were not screened and need further analysis.

4.5 Procedure

Screen a fire compartment if:

- The compartment does *not* contain any of the equipment (and their associated circuits) identified in Tasks 2 and 3, and
- In concert with Section 2.5.3 of the Task 2 procedure, the compartment is such that fires in the compartment will *not* lead to:

- an automatic trip, or
- a manual trip as specified in fire procedures or plans, emergency operating procedures, or other plant policies, procedures and practices, or
- a mandated controlled shutdown as prescribed by plant technical specifications because of invoking a limiting condition of operation (LCO). In this latter case, it is undesirable to identify cases where shutdown is unlikely to occur before the fire is likely to be extinguished and where limited effects are expected. Hence, the analyst needs to judge which cases will be included and provide justifications.

  Note that EPRI-TR-105928 provides a suggestion of including cases where shutdown within 8 hours is mandated.

The above criteria are specifically intended to allow the qualitative screening of fire compartments that do not contain any of the equipment identified in Tasks 2 and 3, but where a prolonged fire might lead operators to implement a controlled manual shutdown strictly as a judgment-based precautionary measure (i.e., manual shutdown is not specifically directed by procedure, nor due to technical specification mandates). It is assumed these types of scenarios are bounded by internal events analyses of general plant trip initiators.

Note that PRA is an iterative process. Should the analyst choose to modify the Task 2/3 equipment list at a later stage of analysis, the qualitative screening analysis should also be reviewed to ensure that fire areas initially screened out still satisfy the screening criteria.

Fire compartments qualitatively screened in this task will be reexamined in Task 11 for fires that may cause potentially risk-significant damage to equipment located in adjacent compartments (Multicompartment fire scenarios).

A fire in a compartment that is qualitatively screened (and does not propagate to an unscreened fire compartment) does not contribute to fire-induced risk individually or collectively, since it neither causes a plant shutdown nor will it put the plant in a degraded condition requiring plant shutdown while the plant remains in the degraded condition.

Changes to plant physical configuration may impact the qualitative screening. When analyzing the risk impact of such plant changes, the effects on qualitative screening need to be examined to find out if new fire scenarios are introduced as the result of the plant change. The following types of plant changes have the potential for impacting qualitative screening.

- Change in operability or effectiveness of fire barriers could introduce new fire scenarios or change existing fire scenarios.
- Changes in fire critical equipment and/or cable locations may also impact qualitative screening of fire compartments. If a fire-critical equipment or cable is moved into a fire compartment that was qualitatively screened, the significance of the cables should be examined to determine if further analysis of the screened compartment is necessary.

4.6 Uncertainty

The issues contributing to uncertainty in this task are related to:

- The impact of the fire on the operational status of the plant, i.e., automatic trip, manual scram or manual controlled shutdown may not be known. In most cases, this is assumed. Note that the uncertainty about components affected by the fire in the compartment is covered by Tasks 2 and 3.
- The assertion that if a fire does not put the plant in a condition where a shutdown is necessary and none of the components selected as critical to PRA are affected by the fire, the risk associated with such fire is negligible.

5
FIRE-INDUCED RISK MODEL (TASK 5)

5.1 Purpose

This section describes the procedure for developing the Fire PRA model to calculate CDF, CCDP, LERF, and CLERP for fire ignition events. The procedure addresses the process of implementing temporary or permanent changes to the Internal Events PRA to quantify fire-induced CDF, CCDP, LERF, and CLERP, and for developing special models to address FEPs. The procedure also addresses the transition from temporary changes to permanent changes to the Internal Events PRA model during the development of the Fire PRA model.

5.2 Scope

This procedure addresses the following major steps for developing the Fire PRA plant model for calculating CDF/CCDP and LERF/CLERP for fire ignition events.

- Step 1–Develop the Fire PRA CDF/CCDP Model.
- Step 2–Develop the Fire PRA LERF/CLERP Model.

5.3 Background Information

5.3.1 General Task Objectives and Approach

The primary objective of this task is to provide an approach that allows the user to configure or modify the Internal Events PRA model to quantify fire-induced CDF, LERF, CCDP, and CLERP. There are at least two different PRA methodologies and a number of different PRA software products available in the industry market. The approach described in this procedure is based on standard, state-of-the-art PRA practices, and is intended to be applicable for any PRA methodology or software product. This procedure allows the user to quantify CDF and LERF or CCDP and CLERP. The only difference is that the quantified values of the fire ignition frequencies are used for CDF and LERF calculations, while the fire ignition frequencies are set to 1.0 or TRUE[1] for CCDP and CLERP calculations.

[1] Care should be taken when configuring the model as to which basic events fail (i.e., failure mode or event set to TRUE or 1.0 failure probability) as a result of the fire. The correct setting (TRUE or 1.0) may need to correspond to the timing of the failure mode (or event) relative to other possible failure modes or events, and/or whether the occurrence of the failure mode or event precludes the other failure modes/events.

Most Internal Events PRA models are based on the premise that the operators will enter the EOPs. Consequently, the plant response and the operator responses modeled in the PRA are based on the EOPs. For some plants, a fire ignition event may drive the operators to FEPs that significantly deviate from the EOPs. In some cases, unprotected trains of mitigation systems (i.e., trains not credited in the Fire Safe Shutdown Analysis) may be placed out of service to preclude the adverse effects of fire-induced spurious actuations. For these cases, the Internal Events PRA model may not be appropriate and special models may have to be developed. For other plants, the FEPs may not significantly deviate from the EOPs, or the EOPs take precedence over the FEPs. For these cases, the Internal Events PRA may be acceptable. The PRA and HRA analysts should review the EOPs and the FEPs and determine whether a special model for the FEPs is needed.

At many plants, a combination of approaches is used. For fires that don't necessitate control room evacuation, the EOPs are often used (and thus the Internal Events PRA is useable), though some actions may be directed by simultaneous use of other fire procedures. For fires that result in control room evacuation (i.e., alternative shutdown), the operators are directed to exit the EOPs and enter the FEPs. Therefore, a dedicated PRA model is needed.

5.3.2 Assumptions

This procedure assumes that the user is familiar with the PRA methodology and software employed at the nuclear power plant facility. The user should also be familiar with the procedures for quantifying the PRA model. This procedure assumes that the Internal Events PRA has sufficient fidelity to automatically propagate component-level failures through the system and sequence logic models.

5.4 Task Interfaces

5.4.1 Input From Other Tasks

This task uses the Internal Events PRA sequences selected in Task 2, Fire PRA Components Selection, a list of unscreened fire compartments from Task 4, Qualitative Screening, a list of PRA equipment from Task 2 as reflected in the Fire PRA Database developed in Support Task B, Fire PRA Database System, and a list of HRA events developed in Task 12, Post-Fire Human Reliability Analysis. There will be some iterations on the number and types of PRA equipment and HRA events addressed in the Fire PRA model due to more detailed analyses in other tasks.

5.4.2 Additional Plant Information Needed to Support this Task

The Internal Events PRA model for the nuclear power plant facility is needed to support this task. The user should also have access to the software tools necessary to quantify the PRA model. The EOPs and FEPs and other fire procedures, as necessary, should be accessible to the user.

5.4.3 Walkdowns

No walkdown is needed to support this task.

5.4.4 Outputs to Other Tasks

This task provides the steps to configure the Internal Events PRA model and support the quantitative screening task (Task 7) that, along with other task products eventually yields the final core damage and large early release estimates from postulated fire events.

5.5 Procedure

In this task, the Internal Events PRA model, the unscreened fire compartments from Task 4, the PRA equipment from Task 2 as reflected in the Fire PRA Database in Support Task B, and the HRA events developed in Task 12 are used to develop the plant model for the Fire PRA. This development is a phased and iterative process of implementing both temporary and permanent changes into the Internal Events PRA model. In the early phases (i.e., during the early quantitative screening), temporary changes to the Internal Events logic models are implemented using surrogate events to simulate the impact of the fire ignition events. While the use of existing surrogate events in the model will be minimized during the early phases, new surrogate events may have to be added to the logic models to capture the direct and indirect impacts of the fire event. During the final quantification phases of the model development process, permanent changes are implemented to the logic models. In any case, the analyst always has the option of implementing permanent changes to the model and bypassing the phased approach. For plants that implement FEPs that deviate from the EOPs, new logic models will likely have to be developed since the Internal Events PRA models may not be appropriate. When new FEP models are needed, the user should work closely with the user of Task 12 to ensure accurate modeling of operator responses in the FEPs.

5.5.1 Step 1: Develop CDF or CCDP Model

In this step, the Internal Events PRA is modified to incorporate the model changes necessary to quantify fire-induced CDF/CCDP. The list of unscreened Fire Compartments from Task 4 and the Fire PRA Equipment Database developed in Support Task B from Task 2 is reviewed to identify those equipment and associated failure modes and effects of concern that need to be modeled in the Fire PRA.

5.5.1.1 Step 1.1: Select Appropriate Fire-Induced Accident Initiators and Sequences and Verify against the Equipment List and Failure Modes

In this step, a fire ignition event(s) is defined for each of the unscreened fire compartments identified in Task 4. The compartments and associated impacts are defined in the Fire PRA Equipment Database. The fire ignition events should be incorporated into the PRA logic model in such a manner as to mimic the impact of the mapped internal initiating events. Each fire ignition event is mapped to the internal initiating event that closely reflects the impact of the

fire ignition event on the plant. For example, a fire ignition in a compartment containing the motor-control center for the service water pumps should be mapped to the loss of service water initiating event. For CCDP calculations and during the early phases of the model development process, the model configuration setting function of the quantification tool (i.e., flag logic or rule-based logic) can be used during the quantification process to introduce temporary changes to the logic models. With this method, the mapped internal initiating event is temporarily assigned a value of 1.0, or TRUE. All other initiators are temporarily assigned a value of 0.0, or FALSE. For CDF calculations and during the final stages of the model development process, fire ignition events can be explicitly incorporated into the logic models.

The Internal Events accident sequences are the primary source for consideration in the Fire PRA model (see Task 2). These sequences are used as a basis for defining fire-specific accident sequences. Much of the existing Internal Events PRA accident sequence logic can be used and fire-induced failures can be propagated through the existing logic structure. However, new sequences may have to be developed to account for spurious operation of equipment. For example, a cable room fire could cause:

- Plant trip,
- Loss of offsite power,
- Spurious PORV opening,
- Loss of RCP seal cooling,
- Loss of cooling water,
- Steam generator overfeed,
- Spurious safety injection causing a stuck open relief valve, etc.

Some of these effects can be directly modeled with the existing Internal Events PRA accident sequence logic. Others will need new logic in order to determine the fire-induced failure scenarios (e.g., Fire * PORV spurious Operates * Block Valve failure). The Fire PRA Equipment Database can be used to generate a list of PRA basic events for each fire compartment. For some PRA models, new fire-specific logic models will have to be developed. Conditional logic needs to be developed for each fire ignition event.

For plants that have FEPs, special models will be needed to address deviations from the EOPs. Across the spectrum of plants, the following procedural responses to a fire ignition event are examples of what may be possible:

- The FEPs are entered and unprotected equipment is disabled to preclude spurious actuations. The EOPs are reentered after the plant is stabilized.
- The FEPs are entered and unprotected equipment is disabled to preclude spurious actuations. The EOPs are not reentered after the plant is stabilized.
- The FEPs are entered but unprotected equipment is not disabled to preclude spurious actuations. The EOPs are not reentered after the plant is stabilized. However, the FEP response is virtually identical to the EOP response.
- The FEPs are entered but unprotected equipment is not disabled to preclude spurious actuations. The EOPs are reentered after the plant is stabilized.

If special FEP models are needed, the following typical issues should be addressed (see Task 12 for more on this subject):

- Human actions to isolate unprotected equipment,
- Human actions to manually operate protected equipment,
- Human actions to transfer control from the control room to the alternate shutdown panel, and
- Human actions to establish safe shutdown.

Figure 5-1 provides an illustration of an FEP response model:

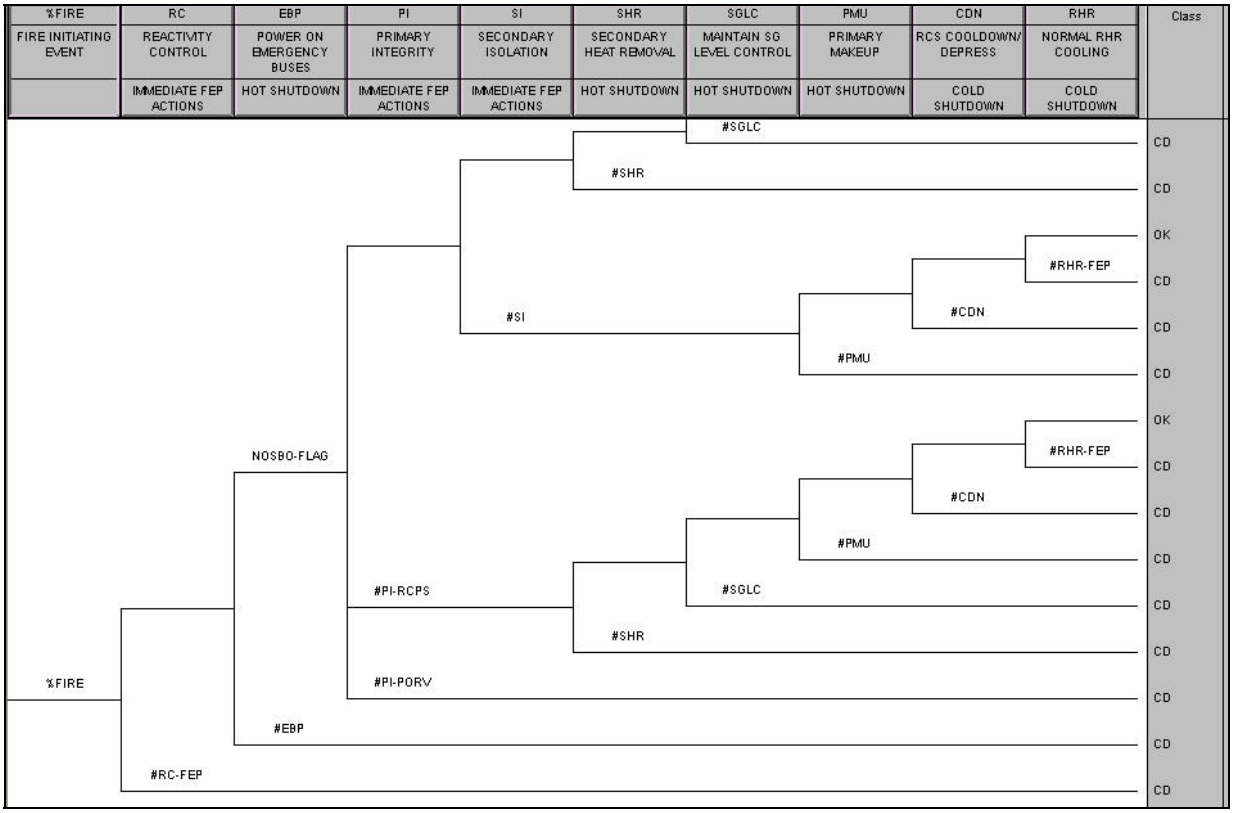

Figure 5-1
Illustration of a FEP Response Model

5.5.1.2 Step 1.2: Incorporate Fire-Induced Equipment Failures

In this step, fire-induced equipment failure modes are incorporated into the Internal Events model. The Fire PRA Equipment database is used to generate a list of failed equipment for each fire compartment. The following types of fire-induced equipment failures are addressed:

- Fire-induced equipment failures (including spurious operation) that directly disable or degrade systems, trains, and functions credited in the Fire PRA model. In some cases, fire-induced cable failure modes may have to be addressed.

- Systems, trains, and functions that are not credited in the Fire PRA model are assumed to be in a failed condition for all fire-initiating events. Therefore, equipment associated with the non-credited systems, trains, and functions are assumed to be in a failed condition for all fire ignition events.
- Fire-induced instrumentation failures (including spurious operation) that prevent the operators from performing a credited action.
- Fire-induced instrumentation failures (including spurious operation) that cause the operators to perform incorrect actions (e.g., reducing defense-in-depth by removing equipment from service).
- Manual actions specified in the FEPs such as to preclude or mitigate the effects of spurious operation.

During the early phases of the model development process, the model configuration setting function of the quantification tool can be used to temporarily assign a value of 1.0 or TRUE for surrogate events in the model. During the final stages of the model development process, the fire ignition impacts can be explicitly incorporated into the logic models. Basic events for spurious operation are defined and included in the PRA logic model. The basic events for spurious operation should be incorporated into the PRA logic model in such a manner as to conditionalize the events with the associated fire initiating events. With the exception of spurious failure events, the fire-ignition event associated with the each fire compartment can directly fail the logic containing the associated basic events. Table 5-1 provides a summary of methods for addressing equipment failures during a fire-ignition event.

Table 5-1
Summary of Methods for Addressing Fire-Induced Equipment Failures

Equipment Category	Temporary Model Changes During Quantification	Permanent Model Changes
Fire-induced equipment failures (including spurious operation) that directly disable or degrade systems, trains, and functions credited in the Fire PRA model. This includes any cable failure modes for compartments containing a significant number of electrical equipment (e.g., switchgear room).	Use the model configuration setting function to assign a value of 1.0 or TRUE for surrogate events associated with the equipment failure. Surrogate events are typically existing equipment basic events in the Internal Events logic model. New surrogate events may have to be added to the logic models if an appropriate basic event is not already present.	Explicitly add fire ignition impacts into the logic model to mimic the failure or degradation of systems, trains, and functions credited in the Fire PRA model. For spurious actuation failures, fire-specific basic events will have to be added to the logic model. The new events will be conditional on the appropriate fire ignition events.
Equipment failures associated with systems, trains, and functions that are not credited in the Fire PRA model	Use the model configuration setting function to assign a value of 1.0 or TRUE for surrogate events associated with failure of systems, trains, and functions that are not credited in the Fire PRA model. Surrogate events are typically existing equipment basic events in the Internal Events logic model. New surrogate events may have to be added to the logic models if an appropriate basic event is not already present.	Explicitly add fire ignition impacts into the logic model to mimic the failure of systems, trains, and functions not credited in the Fire PRA model.
Equipment failures associated with unavailability of intact systems, trains, and functions that are unaffected by the fire. (i.e., used for incremental core damage probability (ICDP) and ILERP calculations)	Use the model configuration setting function to assign a value of 1.0 or TRUE for surrogate events with unavailability of intact systems, trains, and functions that are unaffected by the fire. Surrogate events are typically existing equipment basic events in the Internal Events logic model. New surrogate events may have to be added to the logic models if an appropriate basic event is not already present.	None

Table 5-1
Summary of Methods for Addressing Fire-Induced Equipment Failures (Continued)

Equipment Category	Temporary Model Changes During Quantification	Permanent Model Changes
Fire-induced instrumentation failures (including spurious operation) that prevent the operators from performing a credited action.	Use the model configuration setting function to assign a value of 1.0 or TRUE for surrogate events associated with the failure of credited human actions. Surrogate events are typically existing human failure events in the Internal Events logic model. New fire-specific human failure events may have to be added to the logic models based on actions specified in the fire response procedures.	Explicitly add fire-ignition impacts into the logic model to mimic the failure of instrumentation that prevents the operators from performing a credited human action. For spurious actuation failures and the human failure events, fire-specific basic events will have to be added to the logic model. The new events will be conditional on the appropriate fire-ignition events.
Fire-induced instrumentation failures (including spurious operation) that cause the operators to perform incorrect actions (e.g., reducing defense-in-depth by removing equipment from service).	Use the model configuration setting function to assign a value of 1.0 or TRUE for surrogate events associated with the instrumentation failures that cause the operators to perform incorrect actions. Surrogate events are typically existing equipment failure events in the Internal Events logic model. New surrogate events may have to be added to the logic models if an appropriate basic event is not already present.	Explicitly add fire ignition impacts into the logic model to mimic the failure of instrumentation that cause the operators to perform incorrect actions. For spurious actuation failures, fire-specific basic events will have to be added to the logic model. The new events will be conditional on the appropriate fire-ignition events.
Failure to implement manual actions specified in the FEPs to preclude or mitigate the effects of spurious operation.	Model as a recovery event without explicitly including the human failure event in the logic models. A screening probability of 1.0 should be used as an initial value.	Explicitly include human failure event in the logic models. A screening probability of 1.0 should be used as an initial value.

5.5.1.3 Step1.3: Incorporate Fire-Induced Human Failures

In this step, fire-specific human failure events are defined and included in the PRA logic model (see Task 12). During the early phases of the model development process, the model configuration setting function of the quantification tool can be used to temporarily assign a value of 1.0 or TRUE for surrogate events in the model. Surrogate events are typically existing human failure events in the Internal Events logic model. New fire-specific human failure events may have to be added to the logic models based on actions specified in the fire response procedures.

During the final stages of the model development process, unscreened fire-induced human failure events will be explicitly incorporated into the logic models. The fire-induced human failure basic events will be conditional on the appropriate fire-ignition events.

5.5.2 Step 2: Develop LERF/CLERP Model

In this step, the Internal Events PRA will be modified to incorporate the model changes necessary to quantify fire-induced LERF/CLERP. With the exception of the active containment systems (i.e., containment isolation, containment coolers, hydrogen igniters, and containment spray, etc.), many of the model changes needed to calculate LERF/CLERP are implemented in Step 1.

5.5.2.1 Step 2.1: Select Appropriate Fire-Induced Accident Initiators and Sequences and Verify against the Equipment List and Failure Modes

The Internal Events accident sequences are the primary source for consideration in the Fire PRA model (see Task 2) and are used as a basis for defining fire-specific LERF/CLERP accident sequences. For most PRA models, the existing Internal Events LERF/CLERP accident sequence logic can be used and fire-induced failures can be propagated through the existing logic structure. The Fire PRA Equipment database can be used to generate a list of PRA basic events for each fire compartment. For some PRA models, new fire-specific LERF/CLERP logic models will have to be developed. Conditional logic will have to be developed for each fire ignition event.

As discussed in Section 5.5.1, Step 1, special FEP models may have to be developed to address plant configurations that are outside the scope of the Internal Events PRA model. The same discussions apply to the LERF/CLERP model development process.

5.5.2.2 Step 2.2: Incorporate Fire-Induced Equipment Failures

In this step, fire-induced equipment failure events are incorporated into the LERF/CLERP logic model. With the exception of the active containment systems (i.e., containment isolation, containment coolers, hydrogen igniters, and containment spray, etc.) many of the model changes needed to calculate LERF/CLERP are implemented in Step 1.2. The procedure provided in Step 1.2 can be used to address equipment specifically for the LERF/CLERP model.

5.5.2.3 Step 2.3: Incorporate Fire-Induced Human Failures

Fire-specific human failure events are defined and included in the LERF/CLERP logic model. With the exception of human failure events associated with the active containment systems (i.e., containment isolation, containment coolers, hydrogen igniters, and containment spray, etc.), many of the model changes needed to calculate LERF/CLERP are implemented in Step 1.3. The procedure provided in Step 1.3 can be used to address human failure events specifically for the LERF/CLERP model.

5.6 Uncertainty

An important aspect of the Fire Risk Requantification effort is the identification and, where possible, inclusion of uncertainties in the fire risk results. The ultimate product of Task 5 is the development of the Fire PRA plant model to calculate CDF/CCDP and LERF/CLERP for fire-ignition events. As such, this task contributes uncertainties to the process, all of which can be categorized under one major overall type of uncertainty, i.e., modeling uncertainty. That is, there is the overall uncertainty as to whether the Task 5 result is an adequate model for calculating the CDF/CCDP and LERF/CLERP for fire-ignition events.

This overall uncertainty has three major forms of uncertainty in carrying out Task 5. These are:

- The underlying uncertainties associated with the Internal Events PRA upon which the Fire PRA Model is largely based. In particular, there is the issue as to whether the Internal Events PRA, with all its uncertainties and assumptions as modified by this procedure, is sufficient to base the development of the Fire PRA Model.
- The uncertainty with regards to whether all the relevant fire-ignition events and sequences are included in the model, and whether any new events have been appropriately mapped to the PRA model.
- The uncertainty with regards to whether the model appropriately contains all the relevant modeling of equipment failures and human actions, including the potential effects of spurious operation or failure of equipment.

With the exception that in a few cases, sensitivity analyses could be used to determine the importance of adding (or not) a controversial failure to the model, or how to model a particular failure, it is expected the above uncertainties will be addressed by peer review. Technical reviews are expected to address the above uncertainties so that the final Fire PRA Model is sufficient to determine the CDF/CCDP and LERF/CLERP for fire ignition events. No quantitative assessment or probabilistic treatment of these modeling uncertainties is expected, with the possible exception of a few sensitivities, as noted above. Note that the data uncertainties associated with the model are addressed elsewhere.

6
FIRE IGNITION FREQUENCIES (TASK 6)

6.1 Purpose

This section describes the procedure for estimating the fire-ignition frequencies associated with fire ignition sources. Generic ignition frequencies that can be specialized to plant conditions in terms of plant characteristics and plant fire event experience are provided. Uncertainties in the generic frequencies are also provided in terms of 5th, 50th, and 95th percentiles.

6.2 Scope

This work package addresses the following fire-ignition frequency related issues:

- Plant specific fire event data review and generic fire frequency update using Bayesian approach,
- Equipment (ignition source) count by compartment,
- Apportioning of ignition frequencies according to compartment-specific configurations, and
- Uncertainty considerations in the fire frequencies.

6.3 Background Information

6.3.1 General Task Objectives and Approach

This task estimates fire-ignition frequencies and their respective uncertainties for different compartments (e.g., main control room and RHR pump room) and ignition sources (e.g., CCW Pump A and three vertical segments of a motor control center (MCC)). A generic set of fire-ignition frequencies for various generic equipment types typically found in certain plant locations was developed as a starting point. The combination of locations and equipment types are referred to here as ignition frequency bins. Table 6-1 provides the list of these bins and their respective generic mean frequencies (i.e., the mean value of the uncertainty distribution). The operating mode (i.e., whether or not the plant is in power operation) used for collecting the fire event data for each bin is also noted in that table. Appendix C provides a discussion of the basis of the frequencies and their derivation method. The two-stage Bayesian update method [Reference 6.1] was to account for plant-to-plant variability among the plant. The 5th, 50th and 95th percentiles of the uncertainty distribution are also provided in Appendix C. The underlying fire event data was taken from EPRI's Fire Events Database (FEDB). Single stage Bayesian update method can be used to modify the generic frequencies to reflect the influence of plant specific fire event experience.

Different fire types can be postulated for some of the ignition sources. For example, the bin "plant-wide components/pumps" can refer to both electric and oil fires. In those cases, Table 6-1 provides a split fraction for each fire type. The split fraction was determined according to fire events in the FEDB. Continuing with the plant-wide-components/pumps example, the pump fire events in the database were reviewed and classified as oil or electrical fires. This classification serves as the basis for the split fraction.

The frequencies provided in Table 6-1 apply to all relevant equipment items within a unit. For example, in the case of "batteries," the mean frequency, 7.5E-04 per reactor year, applies to all battery sets of a unit that provides backup power to the DC buses. If there are two battery sets associated with one unit, the fire frequency per battery set would be 3.75.0E-04 per reactor year. If there are four battery sets in another one unit plant, the mean frequency at that plant would be 1.87E-04 per reactor year for each battery set. This is an important feature of the fire frequency model employed in this fire risk methodology.

In Task 7A, the quantification process needs the fire frequency associated with a compartment. Compartment level frequency is calculated from the sum of all frequencies $\lambda_{IS,J}$ associated with the ignition sources present in the compartment. The ignition source frequencies $\lambda_{IS,J}$ are estimated from the following equation:

$$\lambda_{IS,J} = \lambda_{IS} W_L W_{IS,J,L}, \qquad \textbf{Equation 6-1}$$

where:

λ_{IS} = Plant-level fire frequency associated with ignition source IS

W_L = Location weighting factor associated with the ignition source

$W_{IS,J,L}$ = Ignition source weighting factor reflecting the quantity of the ignition source type present in compartment J of location L.

Plant-level fire frequencies (i.e., λ_{IS}) are either taken directly from Table 6-1 or after a Bayesian update using plant-specific fire experience. Location weighting factor, W_L, adjusts the frequencies for those situations where a common location (e.g. turbine building) is shared between multiple units. For example, if one turbine building serves two units, then 2.0 will be used for location weighting factor.

Ignition source weighting factor, in general terms, is the fraction of an ignition source type found in a specific compartment. As presented earlier, if there are two battery sets associated with a unit and one of them is in compartment J, 0.5 should be used for the ignition source weighting factor associated with the batteries found in compartment J. Therefore, to establish the ignition source weighting factors, it is necessary to obtain a count for each room of every relevant item (equipment) in the fire PRA equipment list. Also, the combination of the two factors (i.e., $W_L W_{IS,J}$) accounts for the fraction of an equipment type in a multiunit site found in a specific compartment of the unit being studied.

Compartment level fire frequency would then be calculated from:

$$\lambda_{J,L} = \Sigma \lambda_{IS} W_L W_{IS,J,L} \qquad \textbf{Equation 6-2}$$

(Summed over all ignition sources IS in compartment J of location L)

Table 6-1
Fire Frequency Bins and Generic Frequencies

ID	Location	Ignition Source	Mode	Generic Freq	Split Fractions for Fire Type					
					Electrical	Oil	Transient	Hotwork	Hydrogen	HEAF[1]
1	Battery Room	Batteries	All	7.5E-04	1.0	0	0	0	0	0
2	Containment (PWR)	Reactor Coolant Pump	Power	6.1E-03	0.14	0.86	0	0	0	0
3	Containment (PWR)	Transients and hotwork	Power	2.0E-03	0	0	0.44	0.56	0	0
4	Control Room	Main Control Board	All	2.1E-03	1.0	0	0	0	0	0
5	Control/Aux/Reactor Building	Cable fires caused by welding and cutting	Power	1.6E-03	0	0	0	1.0	0	0
6	Control/Aux/Reactor Building	Transient fires caused by welding and cutting	Power	9.7E-03	0	0	0	1.0	0	0
7	Control/Aux/Reactor Building	Transients	Power	3.9E-03	0	0	1.0	0	0	0
8	Diesel Generator Room	Diesel generators	All	2.1E-02	0.16	0.84	0	0	0	0
9	Plant-Wide Components	Air Compressors	All	2.4E-03	0.83	0.17	0	0	0	0
10	Plant-Wide Components	Battery Chargers	All	1.8E-03	1.0	0	0	0	0	0
11	Plant-Wide Components	Cable fires caused by welding and cutting	Power	2.0E-03	0	0	0	1.0	0	0
12	Plant-Wide Components	Cable Run (Self-ignited cable fires)	All	4.1E-03	1.0	0	0	0	0	0
14	Plant-Wide Components	Electric motors	All	4.6E-03	1.0	0	0	0	0	0

Table 6-1
Fire Frequency Bins and Generic Frequencies (Continued)

ID	Location	Ignition Source	Mode	Generic Freq	Split Fractions for Fire Type					
					Electrical	Oil	Transient	Hotwork	Hydrogen	HEAF[1]
15	Plant-Wide Components	Electrical cabinets	All	4.5E-02	1.0	0	0	0	0	0
16	Plant-Wide Components	High energy arcing faults[1]	All	1.5E-03	0	0	0	0	0	1.0
17	Plant-Wide Components	Hydrogen Tanks	All	1.7E-03	0	0	0	0	1.0	0
18	Plant-Wide Components	Junction box	All	1.9E-03	1.0	0	0	0	0	0
19	Plant-Wide Components	Misc. Hydrogen Fires	All	2.5E-03	0	0	0	0	1.0	0
20	Plant-Wide Components	Off-gas/H2 Recombiner (BWR)	Power	4.4E-02	0	0	0	0	1.0	0
21	Plant-Wide Components	Pumps	All	2.1E-02	0.54	0.46	0	0	0	0
22	Plant-Wide Components	RPS MG sets	Power	1.6E-03	1.0	0	0	0	0	0
23a	Plant-Wide Components	Transformers (Oil filled)	All	9.9E-03	0	1.0	0	0	0	0
23b	Plant-Wide Components	Transformers (Dry)	All	9.9E-03	1.0	0	0	0	0	0
24	Plant-Wide Components	Transient fires caused by welding and cutting	Power	4.9E-03	0	0	0	1.0	0	0

Table 6-1
Fire Frequency Bins and Generic Frequencies (Continued)

ID	Location	Ignition Source	Mode	Generic Freq	Split Fractions for Fire Type					
					Electrical	Oil	Transient	Hotwork	Hydrogen	HEAF[1]
25	Plant-Wide Components	Transients	Power	9.9E-03	0	0	1.0	0	0	0
26	Plant-Wide Components	Ventilation Subsystems	All	7.4E-03	0.95	0.05	0	0	0	0
27	Transformer Yard	Transformer – Catastrophic[2]	Power	6.0E-03	1.0		0	0	0	0
28	Transformer Yard	Transformer - Non Catastrophic[2]	Power	1.2E-02	1.0		0	0	0	0
29	Transformer Yard	Yard transformers (Others)	Power	2.2E-03	1.0	0	0	0	0	0
30	Turbine Building	Boiler	All	1.1E-03	0	1.0	0	0	0	0
31	Turbine Building	Cable fires caused by welding and cutting	Power	1.6E-03	0	0	0	1.0	0	0
32	Turbine Building	Main feedwater pumps	Power	1.3E-02	0.11	0.89	0	0	0	0
33	Turbine Building	Turbine generator (T/G) Excitor	Power	3.9E-03	1.0	0	0	0	0	0
34	Turbine Building	T/G Hydrogen	Power	6.5E-03	0	0	0	0	1.0	0
35	Turbine Building	T/G Oil	Power	9.5E-03	0	1.0	0	0	0	0
36	Turbine Building	Transient fires caused by welding and cutting	Power	8.2E-03	0	0	0	1.0	0	0
37	Turbine Building	Transients	Power	7.4E-03	0	0	1.0	0	0	0

1. See Appendix M for a description of high-energy arcing fault fires.

2. See Section 6.5.6 below for a definition.

In Task 11, the quantification process needs the ignition frequency associated with a fire scenario. Typically, a fire scenario in Task 11 is defined in terms of a fire starting from a specific ignition source and propagating to other combustibles and targets. To establish the ignition frequency associated with a specific ignition source, Equation 6-1 can be used.

The estimation of weighting factors for transient fires is treated differently when compared to the method previously used by EPRI in the Fire PRA Implementation Guide [6.2]. In this procedure, maintenance, storage, and occupancy characteristics are considered in estimating the factors.

6.3.2 Assumptions

The analysis model described in this task is based on the following assumptions.

- Fire ignition frequencies remain constant over time;
- Among the plants, the ignition frequency is the same for the same equipment type, regardless of differences in the quantity and characteristics of the equipment type that may exist among the plants;
- Within each plant, the likelihood of fire ignition is the same across an equipment type. For example, pumps are assumed to have the same fire ignition frequency regardless of size, usage level, working environment, etc.

6.4 Task Interfaces

6.4.1 Input From Other Tasks

This task needs the list of unscreened fire compartments generated in Task 4, Qualitative Screening.

6.4.2 Additional Plant Information Needed to Support this Task

Fire event records available at the plant may be used to update ignition frequencies using plant-specific data. The events may or may not have been included in EPRI's fire events database [6.3]. These fire event records may be categorized based on location, ignition source, and plant operating mode (i.e., power or low power).

6.4.3 Walkdowns

At least one walkdown is recommended to facilitate the equipment count and identify their locations.

6.4.4 Outputs to Other Tasks

The fire ignition frequencies calculated in this task are used in Tasks 7A, 8, 7B, 11, 14 and 15.

6.5 Procedure

This task is organized around the following eight steps:

1. Mapping plant ignition sources to generic sources,
2. Plant fire event data collection and review,
3. Plant specific updates of generic ignition frequencies,
4. Mapping plant-specific locations to generic locations,
5. Location weighting factors,
6. Fixed fire ignition source counts,
7. Ignition source weighting factors, and
8. Ignition source and compartment fire frequency evaluation.
9. A detailed description of each step follows.

6.5.1 Step 1: Mapping Plant Ignition Sources to Generic Sources

It is possible that unique ignition source types are identified that may not be reflected in the generic frequency model ignition source list (see Table 6-1). The purpose of this step is to identify such ignition sources. A plant walkdown may be necessary to accomplish this task. For each location, a review of all ignition sources should be conducted to verify that every ignition source can be mapped to one of the relevant bins in Table 6-1. If an ignition source is identified with no matching bin, the following information should be gathered about that source:

- Characteristics of the source, such as type of ignition source (e.g., electrical, gasoline powered), quantity of energy source (e.g., power, voltage, amount gasoline), presence of open flame or sparks, high temperature surfaces, etc.,
- Percentage of the time the ignition source is functioning when it has the potential of starting a fire,
- Any history of fire events in the plant associated with the specific ignition source, and
- History of fire events at locations other than this plant and other than the nuclear power industry.

If there have been fire events in the plant caused by a nonmatching source, the specific fire event data can be used to estimate the fire ignition frequency associated with that source. If there is no plant-specific history, the location of the ignition source may be reviewed to establish any likelihood of challenging plant safety. If it can be ascertained that plant safety would not be affected at all, a frequency evaluation of the ignition source can be omitted. Otherwise, the ignition frequency associated with the source should be developed and justified using such information sources as the vendor, other industries, or, ultimately comparing the source to others with known ignition frequencies.

6.5.2 Step 2: Plant Fire Event Data Collection and Review

The purpose of this task is to examine the fire events in the plant to make two determinations:

1. Are there any unusual fire occurrence patterns in the plant?

2. Is plant-specific fire frequency evaluation warranted?

In principal, the generic fire frequencies of Table 6-1 may be updated using plant-specific fire event data in all cases. However, to reduce the level of effort, the analysis team may decide to forego this option. Use of the generic fire frequency data is reasonable if an important condition is met: there are no unusual fire occurrence patterns in the plant. Note that the review and examination of plant-specific fire events is one way of comparing the fire protection and housekeeping practices in the plant against the industry experience reflected in the generic fire ignition frequency model.

Plant fire event records are usually available from various sources. This is generally a plant-specific issue. However, often the fire brigade maintains a log of their activities that would include actual fire events. In addition, the maintenance and operations departments may have their logs or event descriptions. For collecting plant-specific information, the following approach is offered.

1. The plant-specific events may or may not include those used in the FEDB for generic fire frequency evaluation. All fire event data should be collected independent of FEDB records.
2. The operating modes associated with each fire ignition bin should be identified and the number of events that occurred only during the specified operating mode should be counted. Refer to Table 6-1 for the operating modes associated with each bin.
3. The number of reactor years is also related to the operating mode. If all operating modes are considered, the reactor years are simply equal to the number of years between commercial operation (or the start of data collection period) and end of the data collection period. If the operating mode is at power only, the number of reactor years is equal to total duration that the plant had been in operation during the data collection period. The duration may be obtained from plant operating records or by applying an average availability factor to the number of years in the data collection period.

The fire events should be classified by location, ignition source, and mode of operation using the information gathered in the preceding step and the generic ignition frequency model approach presented in Appendix C. The outcome of this effort should be the number of fire events in the plant and total reactor years of the plant associated with each bin. The total reactor years should be based on the operating modes considered in the generic frequency analysis of that bin.

A review of plant-specific fire event data may reveal the following potential conditions:

- There are fire events in the plant involving ignition sources that cannot be mapped to any of the ignition source bins of Table 6-1,
- There have been a large number of fire events for a specific ignition source bin, and
- There are only a small number of fire events in the plant being analyzed.

If there are any events that cannot be mapped to one of the ignition source bins of Table 6-1, Step 1 should be revisited to ensure those events are included in that analysis.

If plant fire event history reveals a repeated set of events associated with an ignition source bin, it is recommended that, for those bins, plant-specific fire frequencies be estimated. However, before this determination is made, the analysts may first investigate the severity of those events and attempt to identify any common causes. A common cause may indicate a problem specific to the plant being analyzed. If some of these fire events are potentially challenging (see Appendix C for the definition of this term), and there is a common-cause problem that has not been identified and corrected, a plant-specific fire frequency evaluation is recommended. If the common-cause problem has been identified and corrected, generic fire frequencies may be used. On the other hand, if no commonality could be identified as the root cause of the fires, it may be an indication of the large variations in reporting practices throughout the commercial nuclear power industry, rather than a problem in the plant being analyzed. The use of the generic frequency is warranted for this latter case.

If there are only a small number of fire events in the plant, use of generic fire frequencies is warranted. Otherwise, a plant- specific update of the fire ignition frequencies may significantly alter the fire frequencies.

6.5.3 Step 3: Plant Specific Updates of Generic Ignition Frequencies

This step should be followed for those frequencies that will be based on plant-specific fire event data. After the plant-specific data has been collected and analyzed in Step 2, the generic bin frequencies can be updated using Bayesian approach [6.1]. The following equation can be used for this process:

$$\pi(\lambda|E) = \frac{L(E|\lambda)\pi_o(\lambda)}{\int L(E|\lambda)\pi_o(\lambda)d\lambda}, \qquad \textbf{Equation 6-3}$$

where

$\pi(\lambda|E)$ = The uncertainty distribution for plant-specific fire frequencies (the posterior distribution)

$\pi_o(\lambda)$ = The uncertainty distribution attributed to the generic fire frequencies provided in Appendix C (the prior distribution), and

$L(E|\lambda)$ = The likelihood function of plant-specific fire events.

The likelihood function in a Bayesian formulation usually captures the information provided by the collected plant specific data. The likelihood represents the quality of evidence available to estimate the frequency. In this formulation, the likelihood function is a Poisson probability distribution:

$$L(E|\lambda) = \frac{(\lambda T)^k e^{-\lambda T}}{k!} \qquad \textbf{Equation 6-4}$$

This distribution answers the theoretical question of given a constant frequency; what is the probability of observing the specific number of fire events (k) that occurred in the specific number of reactor years (T)? The prior distribution (generic frequencies) provided in this procedure may be assumed to be lognormal using the 50th and 95th percentiles presented in Appendix C.

6.5.4 Step 4: Mapping Plant-Specific Locations to Generic Locations

Fire ignition source bin definition, in addition to equipment type, includes a plant location (see Table 6-1). This step maps plant-specific locations to generic locations. The following set of generic plant locations is used in defining ignition source bins:

- Battery Room,
- Containment (PWR),
- Control Room,
- Control/Auxiliary/Reactor Building,
- Diesel Generator Room,
- Plant-Wide Components,
- Transformer Yard, and
- Turbine Building.

These generic plant locations are derived based on variety of plant constructions and naming practices. In order to use the generic frequency model, the analyst should assign various plant locations to one of the above-listed generic locations. The ultimate goal of this effort is to map the compartments defined in Task 1 (and not screened in Task 4) to one of the above listed generic locations. Therefore, the final outcome of this task is a list of plant locations and their respective generic locations. Table 6-2 provides a description of each generic location category to facilitate the mapping process described in this step. Note that location weighting factor, W_L, is addressed in Step 3, below.

Generic mapping of areas raises a number of questions about the process, since plants are generally configured differently. The primary criterion used in mapping deals with the location of equipment that serve the same or similar function(s) as the one in the generic database. The premise here is that all plants (per unit) are made up of the same general components that perform the same functions, i.e., power control, inventory control, decay heat removal, on-site AC and DC power, etc. Some of these components are housed in similar locations in different plants (e.g., turbine generator in the turbine building); these are separated in the generic plant locations. Other components vary in their location from one plant to another, e.g., battery chargers and air compressors; these are grouped in a category called “Plant-Wide Components.”

Note that naming schemes varies from plant to plant for rooms and buildings containing similar components. For example, the room(s) where service water pumps are housed are referred to as the: service building, service water pump house, pump building, intake structure, etc. It is important to note that large control panels other than those in the Main Control Room (e.g., Radwaste Control Panel) may be mapped as a Main Control Board. In other words, the same frequency as that used for the Main Control Board of the Main Control Room may be assigned to those other large control panels as well.

Table 6-2
Generic Plant Location Descriptions and Weighting Factor W_L

Plant Location	Description/Clarification	Weighting Factor (W_L)
Battery Room	Plant location(s) where station batteries are located. Does not include other permanent or temporary batteries.	The number of site units that share a common set of batteries.
Containment (PWR)	PWR–The building that houses the reactor core and the rest of the primary system. Refueling floor may be part of this location in many U.S. plants.	The number of units in the site divided by the number of containment buildings.
Control Room	Plant location(s) where controls for normal and emergency plant operations are located. The control room envelope may include additional locations typically referred to as: • Auxiliary Electrical Room or Relay Room, where all plant relay logic circuits are located, • Computer room(s), and • Recreation room or kitchen connected to the control room.	The number of units in the site divided by the number of control rooms per site.
Control/Auxiliary/ Reactor Building	The combination of typically contiguous buildings that contain the emergency core cooling, auxiliary feedwater, emergency electrical distribution system, emergency control circuits, and other safe shutdown related systems. It would include the cable spreading room, emergency or safety related switchgear room, relay room, etc. It would not specifically include the containment where main reactor vessel is located and the fuel handling areas of the plant. Note: in BWRs, this location combination is typically referred to as the Reactor Building.	The number of units in the site divided by the number of shared control/auxiliary/reactor building considered as one structure.

Table 6-2
Generic Plant Location Descriptions and Weighting Factor W_L (Continued)

Plant Location	Description/Clarification	Weighting Factor (WL)
Diesel Generator Rooms	Plant location where emergency diesel generators are located. This does not include temporary diesel generators.	The number of units in the site that share a common set of diesel generators.
Plant-Wide Components	All plant locations inside the fence other than the containment, fuel handling building, office buildings, maintenance yard, maintenance shop, etc.	The number of units per site.
Transformer Yard	The area of the yard where station, service, and auxiliary transformers and related items are located. This may also be referred to as the Switchyard.	The number of units in the site that share a common set of switchyards.
Turbine Building	Plant building that house turbine-generators, its auxiliary systems, and power conversion systems, such as main feedwater, condensate and other systems. Building generally consists of several elevations, including, basement, mezzanine, and turbine deck.	The number of units in the site divided by the number of turbine buildings.

6.5.5 Step 5: Location Weighting Factors

Location weighting factors, W_L, only apply to multiunit sites. For single-unit sites, W_L=1.0 should be used. However, if it is possible to obtain a separate equipment count for each unit in a multiunit site, the analyst can set W_L=1.0 and move to the next step. Otherwise, the location weighting factors should be evaluated per the approach provided in the third column of Table 6-2. The location-weighting factor is used to adjust the generic fire frequencies to account for locations shared among the units in multiunit sites. For example, if there is only one Main Control Room at a site housing the control panels of both units, W_L for the control room becomes 2. Since the generic control room fire frequencies were derived based on the assumption that there is one Main Control Room per unit, the generic fire frequency is doubled to account for the fact that there is only one control room for both units. Table 6-2 provides the method for calculating these weighting factors for each generic location.

6.5.6 Step 6: Fixed Fire Ignition Source Counts

To establish an ignition source weighting factor, $W_{IS,J}$, per compartment, it is necessary to obtain the total number of items per the equipment type defined in Table 6-1. If, in the preceding step for multiunit sites location weighting factors are calculated per the Table 6-2 suggested method, the equipment of the entire site should counted in this step. Otherwise, only the equipment of the unit being studied should be considered.

There are two principal approaches to counting equipment: visual examination (drawings and/or walkdown), or use of an electronic database. A combination of approaches may be used to achieve the objective of this step.

Plant walkdown and direct visual examination of equipment is the recommended approach for this step. Experience indicates that a knowledgeable individual (i.e., one knowledgeable in plant layout and equipment) can estimate the number of components within a reasonable timeframe. A computerized equipment location database may be used to cross-check the results of a visual examination if such a database is available. Note that the safe shutdown equipment (e.g., Appendix R of 10 CFR Part 50) database may not cover all potential fire-ignition sources in a compartment.

Plant drawings may also be used for equipment counting. However, for some equipment, a plant walkdown is necessary to ensure an accurate count. This particularly applies to electrical cabinets, electrical panels, and breaker cubicles. It should be added that for inaccessible areas, drawings may be the only available information source.

An electronic equipment database may facilitate a precise equipment count for each unit in a multiunit facility or for each compartment. For example, the electronic database may provide accurate information about the number of electrical cabinet segments for each switchgear room. An electronic database, however, may not necessarily be more efficient than plant walkdown. Differences in equipment size (e.g., among pumps, compressors, or transformers) may not be clearly indicated in the database. A large number of small-size components may be included in the database that would typically be ignored in fire risk evaluation.

In the following, a counting method is provided for each generic equipment type listed in Table 6-1.

- *Bin 1– Batteries (Battery Room):* Each bank of interconnected sets of batteries located in one place (often referred to as Battery Room) should be counted as one battery set. Cells may not be counted individually.
- *Bin 2– Reactor Coolant Pump (Containment; PWR):* The reactor coolant pumps (RCPs) are distinct devices in PWRs that vary between two and four, depending on primary loop design.
- *Bin 3– Transients and Hotwork (Containment; PWR):* The ignition source weighting factor of transient fires is estimated using a ranking scheme that takes into account maintenance activities, occupancy level, and storage of flammable materials. See Step 7 for a description of the approach.
- *Bin 4– Main Control Board (Control Room):* A control room typically consists of one or two (depending on the number of units) main control boards as the central element of the room. The control room may also include plant computers, other electrical cabinets containing plant relays, and instrumentation circuits, a kitchen type area, desks, bookshelves, and etc. Aside from the main control board, the ignition source weighting factors of the remaining ignition sources of the control room should be based on the approach specific to each ignition source.
- *Bin 5– Cable Fires Caused by Welding and Cutting (Control/Auxiliary/Reactor Building):* Cables are present at all parts of a nuclear power plant. For this bin, it is assumed that all exposed cables (i.e., cables that are not in conduits or wrapped by noncombustible materials)

have an equal likelihood of experiencing a fire caused by welding and cutting across the entire location. To establish the ignition source weighting factor for cables, the approach used in the FHA of the plant can be used. The cable quantity reported in the FHA for each compartment can be used to establish the ignition source weighting factor. In FHAs, cable quantity is often expressed in terms of total weight or total combustible load associated with cables per compartment. The FHA provides a rating for the amount of cables present in the compartment. However, since fire caused by welding and cutting is the focus of this bin, the final ignition source weighting factor is based on a combination of cable loading and transient fire rating of the compartment. See Step 7.2, below.

- *Bin 6– Transient Fires Caused by Welding and Cutting (Control/Auxiliary/Reactor Building):* See Step 7 for the approach to establish the ignition source weighting factor for transients.
- *Bin 7– Transients (Control/Auxiliary/Reactor Building):* See Step 7 for the approach to establish the ignition source weighting factor for transients.
- *Bin 8– Diesel Generators (Diesel Generator Room):* Diesel generators are generally well-defined items that include a set of auxiliary subsystems associated with each engine. It is recommended that each diesel generator and its subsystems be counted as one unit. The subsystems may include diesel generator air start compressors, air receiver, batteries and fuel storage, and delivery system. It is recommended that the electrical cabinets for engine and generator control that stand separate from the diesel generator be included as part of "Plant-Wide Components - Electrical Cabinets." Control panels that are attached to engine may be counted as part of the engine.
- *Bin 9– Air Compressors (Plant-Wide Components):* This bin covers the large air compressors that provide plant instrument air. These compressors are generally well-defined devices. They may include an air receiver, air dryer, and control panel attached to the compressor. These items should be considered part of the air compressor. Noted that compressors associated with the ventilation systems are not part of this bin. Small air compressors used for specialized functions are also not part of this bin.
- *Bin 10– Battery Chargers (Plant-Wide Components):* These are generally well defined items associated with DC buses. Each charger should be counted separately.
- *Bin 11– Cable Fires caused by Welding and Cutting (Plant-Wide Components):* See the discussions for Bin 5. Note that for this bin, compartments that have been accounted for Bins 5 and 31 should be excluded.
- *Bin 12– Cable Run (Plant-Wide Components):* The cable loading of each compartment should be established using the same approach as that for Bin 5, except that, in this case, all plant compartments should be taken into account.
- *Bin 13– Dryers (Plant-Wide Components):* Clothes dryers are generally well-defined units.
- *Bin 14– Electric Motors (Plant-Wide Components):* The electrical motors associated with various devices, not including those counted in other bins, are included in this bin. This may include elevator motors, valve motors, etc[1].

[1] The bin "electric motors" was referred to as "elevator motors" in previous EPRI reports related to fire-ignition frequencies. In this version of the fire ignition frequency model, the bin not only includes elevator motors, but other types of electric motors as well.

- *Bin 15– Electrical Cabinets (Plant-Wide Components):* Electrical cabinets represent such items as switchgears, motor control centers, DC distribution panels, relay cabinets, control and switch panels (excluding panels that are part of machinery), fire protection panels, etc. Electrical cabinets in a nuclear power plant vary significantly in size, configuration, and voltage. Size variation range from small-wall mounted units to large walk-through vertical control cabinets, which can be 20' to 30' long. The configuration can vary based on number of components that contribute to ignition, such as relays and circuit cards, and combustible loading, which also affects the fire frequency. Voltages in electrical cabinets vary from low voltage (120 V) panels to 4.6 kV switchgears. Even though it is expected that these features affect the likelihood of fire ignition, from a simple analysis of the event data involving the electrical cabinets, it was determined that the variation by cabinet type did not warrant separate frequency evaluation. Therefore, one fire frequency was estimated for the electrical cabinets.

The following rules should be used for counting electrical cabinets:

  – Simple wall-mounted panels housing less than four switches may be excluded from the counting process,

  – All free-standing electrical cabinets should be counted by their vertical segments, and

  – To expedite the process, an average number of vertical segments may be used for such cabinets as motor control centers and DC distribution panels.

- *Bin 16– High-Energy Arcing Faults (Plant-Wide Components)*: High-energy arcing faults are associated with switchgear and load centers. Switchyard transformers and isolation phase buses are not part of this bin. For this bin, similar to electrical cabinets, the vertical segments of the switchgear and load centers should counted. The transformers may be included in vertical segment counts, as well.

- *Bin 17– Hydrogen Tanks (Plant-Wide Components):* Hydrogen storage tanks are generally well-defined items. Multitank hydrogen trailers, because they are interconnected, should be counted as one unit.

- *Bin 18– Junction Box (Plant-Wide Components):* The number of junction boxes in an area may be difficult to determine. The frequency can be apportioned based on ratio of cable in the area to the total cable in the plant. Therefore, the ignition source-weighting factor of the cables may be used for this bin, as well.

- *Bin 19– Miscellaneous Hydrogen Fires (Plant-Wide Components):* This bin includes hydrogen fires in miscellaneous systems other than hydrogen cylinder storage, generator cooling, and battery rooms. It is not necessary to count the ignition sources related to this bin. If it becomes necessary to establish an ignition frequency associated with the components of this bin for a specific compartment or a pipe segment, the approach recommended below in Step 7 for large systems may be used.

- *Bin 20– Off-Gas/H2 Recombiner; BWRs (Plant-Wide Components):* Generally there are at least two recombiner systems per BWR. Each recombiner system should be counted as one unit. If there are risk significant cables and components located close to a recombiner, in Task 11, the ignition frequency of a fire involving the recombiner can be estimated by assuming equal probability of fire ignition across the length of the recombiner system.

- *Bin 21– Pumps (Plant-Wide Components):* For this methodology, it is assumed that above a certain size, fire ignition is the same for all pumps. Pumps below 5 hp are assumed to have little or no significant contribution to risk. Do not count small sampling pumps. The number of pumps in all plant locations defined as "Plant-Wide" should be estimated.
- *Bin 22– RPS MG sets (Plant-Wide Components):* In PWRs, the RPS MG sets are well-defined devices. The electrical cabinets associated with the MG sets are not included as part of these items.
- *Bin 23– Transformers (Plant-Wide Components):* All dry-type indoor transformers that are not part of larger components are included in this count. Control power transformers and other small transformers, which are subcomponents in major electrical equipment, should be ignored. They are assumed to be an integral part of the larger component. Examples of transformers accounted for in this bin include 4160/480 transformers attached to AC load centers, low-voltage regulators, and essential service lighting transformers. The large yard transformers are not part of this count. In addition, the analyst should count wall-mounted transformers if they do satisfy other counting criteria. Finally, do not count lighting transformers.
- *Bin 24– Transient Fires caused by Welding and Cutting (Plant-Wide Components):* See Step 7 for the approach to establish ignition source weighting factors for transients.
- *Bin 25– Transients (Plant-Wide Components):* See Step 7 for the approach to establish the ignition source weighting factor for transients.
- *Bin 26– Ventilation Subsystems (Plant-Wide Components):* This category includes components such as air conditioning units, chillers, fan motors, air filters, dampers, etc. A fan motor and compressor housed in the same component are counted as one component. Do not count ventilation fans if the drive motor is 5 hp or less.
- *Bin 27– Yard Transformer–Catastrophic:* The high-voltage power transformers typically installed in the yard belong to this bin. They include plant output power transformers, auxiliary-shutdown transformers, and startup transformers, etc. Isolation phase bus ducts are also included in this bin to simplify fire frequency analysis.

  A catastrophic failure of a large transformer is defined as an energetic failure of the transformer that includes a rupture of transformer tank, oil spill and burning oil splattered a distance from the transformer. In this case the analyst should use the frequency and: 1) determine availability of offsite power based on the function of the transformer(s), and 2) consider propagation to adjacent (not nearby) building or components. A propagation path may be considered at the location of open or sealed penetrations, e.g., where a bus-duct enters from the Yard into the Turbine Building. Structural damage need only be considered only where appropriate shields are not present to protected structures and components against blast or debris.

- *Bin 28– Yard Transformer–Non-Catastrophic:* Similar to Bin 27 this bin includes the high-voltage power transformers typically installed in the yard. However, isolation phase bus ducts are not included in this bin.

  In a non-catastrophic transformer failure oil does spill outside transformer tank and the fire does not necessarily propagate beyond the fire source transformer. Analyst can use all the frequency and assume total loss of the "Transformer/Switch Yard" or may split this

frequency equally among the large transformers of the area and assume loss of each transformer separately. Loss of offsite power should be determined based on the function of the affected transformer(s).

- *Bin 29– Transformer Yard, Others:* Items associated with yard transformers but not the transformers themselves (e.g., oil power output cables) are part of this bin. In the screening phase of the project, the analyst may conservatively assign the same frequency to all the items in this group. If the scenario would not screen out, the frequency may then be divided among the various items in this group. A relative ranking scheme may be used for this purpose. The ranking may be based on the relative characteristics of the items and analysts' judgment.
- *Bin 30– Boiler (Turbine Building):* Boilers are generally well-defined items. All ancillary items associated with each boiler may be included as part of the boiler. Control panels that are installed separate from a boiler may be included in the "Electrical Cabinets (Plant-Wide Components)" bin.
- *Bin 31– Cable Fires caused by Welding and Cutting (Turbine Building):* See the discussion for Bin 5.
- *Bin 32– Main Feedwater Pumps (Turbine Building):* Main feedwater pumps are generally well-defined entities. If there are ancillary components associated with each pump, it is recommended to include those items as part of the pump.
- *Bin 33– T/G Excitor (Turbine Building):* The turbine generator excitor is a well-defined item. Generally, there is only one excitor per unit.
- *Bin 34– T/G Hydrogen (Turbine Building):* A complex of piping, valves, heat exchangers, oil separators, and often skid-mounted devices are associated with turbine generator hydrogen. Consider the entire complex as one system and assign the ignition frequency of this bin to that system. It is important to have a clear definition of system boundaries to ensure that, between this bin and Bin 19, all hydrogen-carrying items of the plant are properly accounted for. Similar to Bin 29, in the screening phase of the project, the analyst may conservatively assign the same frequency to all the items in this bin. If the scenario would not screen out, the frequency may then be divided among the various items using a relative ranking scheme. The ranking may be based on the relative characteristics of the items and the analysts' judgment.
- *Bin 35– T/G Oil (Turbine Building):* Similar to hydrogen, a complex of oil storage tanks, pumps, heat exchangers, valves, and control devices belong to this bin. It is recommended to treat the entire complex as one system and assign the ignition frequency of this bin to that system. Similar to the preceding bin and Bin 29, in the screening phase of the project, the analyst may conservatively assign the same frequency to all the items in this bin. If the scenario would not screen out, the frequency may then be divided among the various items using a relative ranking scheme. The ranking may be based on the relative characteristics of the items and analysts' judgment.
- *Bin 36– Transient Fires caused by Welding and Cutting (Turbine Building):* See Step 7 for the approach to establish the ignition source weighting factor for transients.
- *Bin 37– Transients (Turbine Building):* See Step 7 for the approach to establish the ignition source weighting factor for transients.

6.5.7 Step 7: Ignition Source Weighting Factors

Ignition source weighting factor, $W_{IS,J}$, is the fraction of ignition source ignition source (IS) that is present in compartment J. The $W_{IS,J}$ are evaluated for all the compartments identified in Task 1 and for all ignition sources identified in Step 1 of this task. The bins listed in the preceding section can be classified in three categories: countable items, transients, and large systems. A separate procedure is presented below for each type.

6.5.7.1 Countable Items

The ignition source weighting factor, $W_{IS,J}$, for countable items is calculated by dividing the number of each IS in compartment J by the total number in the generic locations obtained in Step 6. For example, if there are two pumps in the AFW pump room and there are 50 pumps counted for Bin 21 in Step 6, the ignition source weighting factor for the pumps in this room would be 2/50 = 0.04. Note that $W_{IS,J}$ for ignition sources grouped in the "Plant-Wide Components" bin will need the total equipment count for the plant.

6.5.7.2 Transients

A relative ranking scheme is described here for estimating the ignition source weighting factors for ignition frequency bins involving transient combustibles or activities. This scheme applies to all transient fire related bins defined in Table 6-1; that is Bins 3, 5, 6, 7, 11, 24, 25, 31, 36 and 37. Note that a separate relative ranking analysis should be conducted for each bin. Occupancy level, storage of flammable materials, and type and frequency of maintenance activities in a compartment are the three most important influencing factors of the likelihood of fire ignition involving a transient combustible or activity.

It is assumed that transient fires may occur at all areas of a plant unless precluded by design and/or operation, such as inside a BWR drywell or torus during power operation. Administrative controls significantly impact the characteristics and likelihood of transient fires, but they do not preclude their occurrence, since there is industry evidence of failure to follow administrative control procedures.

Some areas of the plant, such as office areas (computers, cubicles, etc) and chemistry labs may have safe-shutdown cables. The fire frequency for these areas may be underestimated if the analysis consists mainly of counting plant components like electrical cabinets, pumps, etc., because these rooms do not contain plant-type sources. High-transient fire "influence factors" may be assigned to these areas in order to properly capture the fire risk.

The three influencing factors are described below:

1. Maintenance–The frequency and the nature of maintenance activities (preventive and/or corrective) in a compartment can impact the likelihood and characteristics of transient fires. This depends on the type of equipment in the compartment, maintenance and hot work procedures, and housekeeping practices. The number of work orders issued during power operation for different compartments of the plant during a specific time period can be used to establish the relative ranking associated with maintenance activities. The analyst should use engineering judgment to determine the maintenance factor of compartments with no work orders in the selected period of time. The judgment can be based on the characteristics of the

compartment relative to compartments with work orders. If the work orders cannot be collected easily, the analyst may use engineering judgment based on personal experience or information gathered from the maintenance personnel of the plant. In this case, the analyst may ask the maintenance personnel to rate assign a rating number between 0 and 10 in terms of frequency of maintenance at a compartment and offer the two or three most typical maintenance activities (e.g., welding, pump overhaul, and electrical device replacement). A "0" rating can only be assigned to those compartments where no maintenance is possible or allowed during power operation.

2. Occupancy–Occupancy level, which includes traffic, of a compartment impacts both the likelihood of transient combustibles (within the limits specified by plant housekeeping program) present in the compartment and the likelihood of ignition. Engineering judgment may be used to determine the occupancy factor.

3. Storage–Temporary or permanent storage of combustible/flammable materials in racks, cabinets, and other forms can impact the frequency and characteristics of transient fires initiated in compartments where such storage racks/cabinets are placed. The amount, type, and frequency of the use of material maintained in these storage containers should be taken into account. Engineering judgment augmented with plant walkdowns may be used to determine the storage factor.

Assigning a rating level to each of the three influencing factor is an exercise in subjective judgment reflecting plant-specific layout and practices. It is recommended to use the following five rating levels.

1. No (0)–Can be used only for those compartments where transients are precluded by design.

2. Low (1)–Reflects minimal level of the factor.

3. Medium (3)–Reflects average level of the factor.

4. High (10)–Reflects the higher-than-average level of the factor.

5. Very high (50)–Reflects the significantly higher-than-average level of the factor (only for "maintenance" influencing factor).

Table 6-3 provides a brief description of these levels for each influencing factor. The following additional comments are noted.

- The influencing factor for maintenance should be based on the frequency and type of activities. The information obtained from work order counts or maintenance staff should be translated to the five levels defined here.
- If maintenance activity of a compartment includes liquid combustible/flammable material (e.g., diesel fuel, lubricating oil), the compartment should be rated as "high." This exercise should consider all compartments affected by the maintenance activity. For example, if lube oil is staged in the turbine building for diesel generator oil change, both the turbine building and diesel generator room are considered affected by this maintenance activity.
- A low rating should be assigned to those compartments where administrative procedures prohibit welding and cutting during power operation.
- Areas requiring dosimetry may be assigned a low occupancy level, unless personnel needs walk through these areas to access other areas of the plant.

Table 6-3
Description of Transient Fire Influencing Factors

Influencing Factor	No (0)	Low (1)	Medium (3)	High (10)	Very High (50)
Maintenance	Maintenance activities during power operation are precluded by design.	Small number of PM/CM work orders compared to the average number of work orders for a typical compartment.	Average number of PM/CM work orders.	Large number of (PM)/(CM) work orders compared to the average number of work orders for a typical compartment.	Should be assigned to plant areas that may experience significantly more (PM)/(CM) work orders compared to the average number of work orders for a typical compartment.
Occupancy	Entrance to the compartment is not possible during plant operation.	Compartment with low foot traffic or out of general traffic path.	Compartments not continuously occupied, but with regular foot traffic.	Continuously occupied compartment.	Not applicable
Storage	Entrance to the compartment is not possible during plant operation.	Compartment where no combustible/ flammable materials are stored.	Compartments where all combustible/ flammable material is stored in closed containers placed in dedicated fire-safe cabinets.	Compartments where combustible/ flammable materials may sometimes be brought in and left in either open containers for a short time or in a closed container, but outside a dedicated fire-safe cabinet for an extended time.	Not applicable

Since the different transient fire bins address different plant locations and activities, the influencing factors should be evaluated separately for each case. The following notes are provided for the various bins.

- For general transient fires (i.e., Bins 3, 7, 25 and 37), all three influencing factors should be evaluated.
- For transient fires caused by welding and cutting (i.e., Bins 6, 24, and 36), only the maintenance influencing factor should be evaluated. A "low" rating can be assigned to compartment for which administrative procedures prohibit welding and cutting during power operation.
- For cable fires caused by welding and cutting (i.e., Bins 5, 11, and 31), as in the other cases of welding and cutting, only the maintenance influencing factor should be evaluated.

As an overall approach, the numerical rating of the factors are added for each compartment and then normalized across all the compartments of the location. That is, the ignition source weighting factor for transients is calculated using the sum of the influencing factors.

For *general transients* (i.e., Bins 3, 7, 25, and 37), the following equation should be used to establish the ignition source weighting factor:

$$W_{GT,J,L} = (n_{m,J,L} + n_{o,J,L} + n_{s,J,L})/N_{GT,L}$$

$$N_{GT,L} = \Sigma\ (n_{m,i,L} + n_{o,\ i,L} + n_{s,\ i,L})$$
(summed over all i, location L compartments).

where:

$n_{m,J,L}$ = Maintenance influence factor rating of compartment J of location L,

$n_{o,J,L}$ = Occupancy influence factor rating of compartment J of location L, and

$n_{s,J,L}$ = Storage influence factor rating of compartment J of location L.

In the case of *transient fires caused by welding and cutting* (i.e., Bins 6, 24, and 36), the following equation should be used:

$$W_{WC,J,L} = n_{m,J}/N_{WC}$$

$$N_{WC} = \Sigma\ n_{m,i,L}$$
(summed over i, all the compartments of location L).

For *cable fires caused by welding and cutting* (i.e., Bins 5, 11, and 31), the following equation should be used:

$$W_{CF,J} = (n_{m,J}/N_{CF})\ W_{Cable,J}$$

$$N_{CF} = \Sigma\ n_{m,i,L}$$
(summed over all i, location L compartments),

where:

$W_{Cable,J}$ = Cable load of compartment J, based on the ratio of quantity of cables in compartment J over the total quantity of cables in the location.

Consider a plant that has two fire compartments within a generic location in the frequency model. The first compartment is one with a significant number of components requiring maintenance (therefore rated high for maintenance), is not continuously occupied but has regular foot traffic (rated medium for occupancy), and has permanent storage cabinets (rated high for storage). This area resembles the turbine deck area of a turbine building. The second compartment is one that has no components requiring preventive maintenance (rate low for maintenance) or is not a staging area for maintenance activity in other parts of the plant, the compartment does not have regular foot traffic or is not *en route* to other fire compartments (rated low for occupancy). There are no storage cabinets in the compartment (rates low for storage). Cable tunnels generally have such characteristics.

Using the rating system described above, the normalized rating for each compartment may be calculated as follows:

Compartment 1:	Rating = 10+3+10 = 23	Normalized grade = 23/(23+3) = 0.88
Compartment 2:	Rating = 1+1+1 = 3	Normalized grade = 3/(23+3) = 0.12

This result will generate a transient fire frequency for Compartment 1 that is nearly eight times higher than the transient fire frequency for Compartment 2.

6.5.7.3 Large Systems

Bins 19, 20, and 35 address a complex of components within the plant that have common characteristics. It should be noted that depending on analysts' definition, other bins may also fall into this category. The detailed fire analysis in Task 11 may need fire frequency estimation based on a small portion of the complex of components from the bin. The simplest approach would assume that there is equal likelihood across the complex of components. A geometric factor may be used to adjust bin frequency to the specific area of the plant where the components addressed in the bin could be risk-significant. The geometric factor refers to floor area ratio, or the ratio of the floor area where the fire will have the same impact. In place of a geometric factor, the analyst may count the various components of the complex and rate them by an *ad-hoc* scheme that discriminates by the relative likelihood of ignition. For example, for Bin 19, it may become necessary to estimate the ignition frequency associated with miscellaneous hydrogen piping in a specific compartment of the Auxiliary Building. In this case the analyst may estimate the fraction of the piping and components of this bin that are present in this specific compartment and use that fraction to adjust bin frequency to estimate the fire ignition frequency associated with hydrogen piping. If the hydrogen piping in this compartment is composed of only one pipe piece with no flanges, valves, or any other items attached to it, the analyst may use an adjusting factor smaller than the simple fraction suggested above. However, if the compartment houses a disproportionate fraction of pressure regulators, valves, and flanges, the analyst may elect to use an adjusting factor greater than the simple fraction.

6.5.8 Step 8: Ignition Source and Compartment Fire Frequency

The fire frequency (generic or plant-specific) for each ignition source, λ_{IS-J}, can now be calculated using the data quantified in the preceding steps with Equation 6-1. Note that when adding various ignition source frequencies to obtain compartment fire frequency, one should use the mean value of the uncertainty distributions for the various parameters of the summation. This will yield the mean value of compartment fire frequency. The uncertainty distribution of compartment fire frequency is not necessary in the screening steps for a fire PRA. Propagation of the uncertainty distributions for the ignition sources is done in Task 18, Uncertainty and Sensitivity Analysis.

6.6 Uncertainty

The generic fire frequencies have been identified as the main source of uncertainty in this task. The generic frequencies are based on fire events data collected by EPRI from different data sources. The sources include individual nuclear power plants, and other organizations and government agencies like Nuclear Electric Insurance Limited (NEIL) and the Nuclear Regulatory Commission (NRC). Each of these sources has different criteria for reporting fires. Furthermore, some fire reports were not written specifically for describing a fire, but a fire was part of the event.

In addition to the variability generated by different data sources, it is unlikely that EPRI has been successful in collecting a report for every fire that has occurred in U.S. nuclear power plants. The fire frequencies, however, do not reflect this limitation.

In summary, the generic frequencies are estimated and uncertainty bounds are provided. These uncertainty bounds account for the inherent randomness of the occurrence of fire events, and the variability among the plants.

6.7 References

6.1 Kaplan, “On a ‘Two-Stage’ Bayesian Procedure for Determining Failure Rates from Experiential Data,” *IEEE Transactions on Power Apparatus and Systems*, Volume PAS-102, 1983, pp. 195-202.

6.2 *Fire PRA Implementation Guide,* Electric Power Research Institute, TR-105928.

6.3 *Fire Event Database and Generic Ignition Frequency Model for U.S. Nuclear Power Plants*, EPRI, Palo Alto, CA: 2001. 1003111.

7
QUANTITATIVE SCREENING (TASK 7)

7.1 Purpose

This section describes the procedure for performing the following Quantitative Screening Tasks:

- Task 7A–Quantitative Screening I
- Task 7B–Quantitative Screening II
- Task 7C–Quantitative Screening III (Optional)
- Task 7D–Quantitative Screening IV (Optional)

This procedure provides the user an approach to quantify the Fire PRA Model using the procedure provided in Task 5, and to screen fire compartments based on quantitative criteria. This procedure develops the bases for the quantitative screening criteria and provides specific methods for implementing the screening process.

7.2 Scope

This procedure addresses the following steps for each of the major quantitative screening tasks.

- Step 1–Quantify core damage frequency (CDF) Model
- Step 2–Quantify LERF Model
- Step 3–Quantitative Screening

In Tasks 7A and 7B, the Fire PRA Model is quantified at the fire compartment level. In Tasks 7C and 7D, the Fire PRA Model is quantified at the fire scenario level. Although not recommended, the quantitative screening can be implemented for screening fire scenarios. Therefore, Tasks 7C and 7D are considered optional tasks in this procedure. The basis for the quantitative screening criteria is developed and an approach for implementing the screening process is provided. To address future use of the Fire PRA Model for risk-informed applications, quantitative screening criteria also considers the impact of equipment unavailability.

7.3 Background Information

7.3.1 General Task Objectives and Approach

The primary objective of this task is to provide the user an approach to quantify the Fire PRA model developed in Task 5, and to screen fire compartments based on quantitative screening criteria. There are at least two different PRA methodologies and a number of different PRA software products available in the industry market. The approach described in this procedure is based on standard state-of-the-art PRA practices, and is intended to be applicable for any PRA

methodology or software product. This procedure allows the user quantify CDF and LERF or CCDP and CLERP. The only difference is that the quantified values of the fire ignition frequencies are used for CDF and LERF calculations, while the fire ignition frequencies are set to 1.0 or TRUE for CCDP and CLERP calculations. To allow future use of the Fire PRA Model for risk-informed applications, the impact of equipment unavailability is addressed in the quantitative screening criteria by imposing the option to calculate ICDP and ILERP.

Quantitative screening is primarily focused on a fire compartment level (i.e., Tasks 7A and 7B). Quantitative screening on a fire scenario level (i.e., Tasks 7C and 7D) is presented as optional tasks in this procedure. Quantitative screening does not imply that the logic models for the screened compartments are removed from the Fire PRA model. The intent of the quantitative screening process is to limit the scope of detailed fire modeling and/or detailed circuit analysis by focusing on the dominant fire compartments. All screened compartments remain in the Fire PRA model.

The quantitative screening criteria were developed with the intent of ensuring that the cumulative risk contributions (i.e., CDF and LERF) from the screened fire compartments are insignificant relative to the total internal event risk. Another goal of the quantitative screening criteria is to ensure that the cumulative incremental risk (i.e., ICDP and ILERP) from screened compartments, when combined with equipment unavailability, is less than industry limits. For this reason, the procedure addresses quantitative risk screening criteria for CDF, LERF, ICDP (optional), and ILERP (optional). The criteria for ICDP and ILERP are optional measures that can be applied by users who choose to integrate the Fire PRA model with risk-monitoring models. This approach is different from earlier fire compartment screening criteria, where the goal was to identify CDF risk vulnerabilities using a generic, fixed compartment screening criteria. This procedure addresses both single compartment risk screening criteria and cumulative compartment risk screening criteria (i.e., the sum of the risk contributions of all screened compartments). The CDF/LERF cumulative compartment risk criteria are based on limiting the cumulative risk of screened compartments to less than 10% of the total internal events risk. The single compartment risk criteria are floating risk measures that start with an initial criteria based on limiting the single compartment risk to less than the product of the highest fire ignition frequency and the conditional risk (CCDP or CLERP) of the case where the General Plant Transient Internal Event Initiating Event is set to 1.0 and all other Internal Events Initiating Events set to 0.0. The single compartment risk criteria are adjusted downward, if necessary, to ensure that the cumulative compartment risk criteria are met. This procedure acknowledges that the CDF and LERF risk measures are plant-specific and that the risk measures for a given plant could change due to plant modifications, plant configurations changes, etc. For example, for a plant with a 1.0E-05/yr internal event CDF, the cumulative screened compartment CDF contribution should be less than 1.0E-06/yr. On the other hand, a plant with a 1.0E-06/yr internal event CDF should not have a cumulative screened compartment CDF contribution greater than 1.0E-07/yr.

The ICDP/ILERP cumulative compartment incremental risk criteria are based on limiting the cumulative incremental risk of screened compartments to less than 1.0E-06 for ICDP and to less than 1.0E-07 for ILERP. The single compartment incremental risk criteria are floating risk measures that start with an initial criterion based on limiting the single compartment incremental risk to less than 1.0E-07 for ICDP and to less than 1.0E-08 for ILERP. The single compartment risk criteria are adjusted downward, if necessary, to ensure that the cumulative compartment incremental risk criteria are met.

The quantitative screening criteria described in this procedure are intended to be minimum standards for focusing the detailed analyses on dominant compartments while minimizing the risk contribution of screened compartments. While this quantitative screening procedure should be acceptable for most applications of the Fire PRA model, users of this procedure may decide to impose more restrictive criteria to support other unique applications, such as on-line risk monitoring. For example, the user may decide to bypass the ICDP/ILERP screening process by reducing the CDF/LERF screening process. However, the user should confirm that the CDF/LERF screening criteria is sufficiently low to ensure that the cumulative incremental risk of screened compartments is less than industry limits. The bases for the quantitative screening criteria are provided in Appendix D.

7.3.1 Assumptions

This procedure assumes that the user is familiar with the PRA methodology and software employed at the nuclear power plant facility. The user should also be familiar with the procedures for quantifying the PRA model.

7.4 Task Interfaces

7.4.1 Input From Other Tasks

Task 7A (Quantitative Screening I) uses input from Task 6, Fire Ignition Frequencies, Task 5, Fire-Induced Risk Model, and Task 12, Post-Fire HRA–the Screening portion. Task 7B (Quantitative Screening II) uses input from Task 8, Scoping Fire Modeling. Optional Tasks 7C and 7D use input from Task 9, Detailed Circuit Failure Analysis, Task 10, Circuit Failure Mode Likelihood Analysis and Task 11, Detailed Fire Modeling.

7.4.2 Additional Plant Information Needed to Support this Task

The Internal Events PRA model for the nuclear power plant facility is needed to support this task. The user should also have access to the software tools needed to quantify the PRA model.

7.4.3 Walkdowns

No walkdown is needed to support this task.

7.4.4 Outputs to Other Tasks

Unscreened fire compartments from Task 7A are input to Task 8, Scoping Fire Modeling. Unscreened fire compartments from Task 7B are used in performing Task 11, Detailed Fire Modeling and Task 12, Post Fire HRA, the detailed analysis portion. Optional Tasks 7C and 7D are performed in parallel with detailed fire scenario analysis, and unscreened fire scenarios are input to Task 14, Fire Risk Quantification.

7.5 Procedure

The section describes the detailed procedure for performing the quantitative screening tasks (Tasks 7A-D) and preparing the Quantitative Screening Calculation Package. With the exception of the inputs and outputs, the implementation of the quantitative screening procedure is the same for all quantitative screening tasks. Table 7-1 summarizes inputs and outputs for each quantitative screening task. Since the steps for each of the quantitative screening tasks are essentially the same, this procedure is written in a generic fashion, with the differences delineated in Table 7-1. With the exception of Task 7A, an updated version of the Fire PRA Model developed using the Task 5 procedure, the updated HRA values provided in Task 12 (including any insights from the HRA dependency analysis), and/or an updated version of the fire ignition frequencies developed in Task 6, are used to quantify CDF and LERF frequencies for each fire compartment. The Task 5 procedure provides methods for implementing temporary or permanent changes to the Internal Events logic models to calculate fire-induced CDF/CCDP and LERF/CLERP for each compartment. The compartment fire ignition frequencies provided in Task 6 are combined with the appropriate compartment CCDP and CLERP values to quantify compartment CDF and LERF values.

Alternatively, the compartment fire ignition frequencies provided in Task 6 and the initial/updated HRA values provided in Task 12 (including any insights from the HRA dependency analysis) may be incorporated into the Fire PRA Model developed using Task 7. For this option, compartment CDF and LERF values may be calculated directly. Calculation of fire-induced CCDP and CLERP for each compartment will not be necessary.

7.5.1 Step 1: Quantify CDF Model

In this step, the initial/updated Fire PRA Model developed using the Task 5 procedure, the initial/updated HRA values provided in Task 12 (including any insights from the HRA dependency analysis), and the generic/updated fire ignition frequencies developed in Task 6 are used to quantify CDF frequencies for each fire compartment. The Task 5 procedure provides methods for implementing temporary or permanent changes to the Internal Events PRA logic models to calculate fire-induced CDF/CCDP for each compartment. The initial/updated compartment fire ignition frequencies provided in Task 6 are combined with the appropriate compartment CCDP values to quantify compartment CDF values.

Alternatively, the generic/updated compartment fire ignition frequencies provided in Task 6 and the initial/updated HRA values provided in Task 12 (including any insights from the HRA dependency analysis) may be incorporated into the initial/updated Fire PRA Model developed in the Task 5 procedure. For this option, compartment CDF values may be calculated directly. Calculation of fire-induced CCDP for each compartment will not be necessary, and Step 1.1 can be skipped. Table 7-1 summarizes inputs and outputs for each quantitative screening task.

Table 7-1
Quantitative Screening–Summary of Inputs and Outputs

Task	Inputs	Outputs
Task 7A–Quantitative Screening I	1. Initial Fire PRA Model developed using Task 5. At this stage of the quantitative screening process, all fire-induced failures are assumed to be in a failed state. 2. The compartment fire ignition frequencies provided in Task 6 values 3. Screening HRA values from Task 12, including any insights from the HRA dependency analysis.	See list of outputs below
Task 7B–Quantitative Screening II	1. Insights from Task 8 (Scoping Fire Modeling) are incorporated into Fire PRA model using Task 5. 2. Updates to the fire ignition frequencies developed in Task 6. 3. Revised HRA values from Task 12, including any insights from the HRA dependency analysis.	See list of outputs below
Task 7C–Quantitative Screening III (Optional)	1. Insights from Task 9 (Detailed Circuit Failure Analysis) and Task 11 (Detailed Fire Modeling) are incorporated into Fire PRA model using Task 5. 2. Updates to the fire ignition frequencies developed in Task 6. 3. Revised HRA values from Task 12, including any insights from the HRA dependency analysis.	See list of outputs below
Task 7D–Quantitative Screening IV	1. Insights from Tasks 10 (Circuit Failure Mode Likelihood Analysis) are incorporated into Fire PRA model using Task 5. 2. Final HRA events from Task 12, including any insights from the HRA dependency analysis.	See list of outputs below

Outputs

1) List of failed equipment for each fire compartment.

2) Model logic changes and/or temporary settings for fire each compartment. This includes a description of how HRA events were incorporated into the model and how surrogate events were used to represent HRA events.

3) Calculated CDF, LERF, ICDP, and ILERP results (including cutsets) for each compartment, including truncation values.

4) List of screened compartments, including basis for exclusion.

5) Documentation of technical approach, assumptions, and conclusions, and interfaces with other tasks.

6) Recommendations for reducing compartment frequencies.

7.5.1.1 Step 1.1: Quantify CCDP Model

In this step, the initial/updated Fire PRA Model developed using the Task 5 procedure and the initial/updated HRA values provided in Task 12 (including any insights from the HRA dependency analysis) will be used to quantify CCDP values for each fire compartment. The Task 5 procedure provides methods for implementing temporary or permanent changes to the Internal Events PRA logic models to calculate fire-induced CCDP for each compartment. In order to use the model for future applications, additional CCDP calculations may be performed to address the unavailability of one or more trains and/or systems that are unaffected by the fire (i.e., intact train and/or systems). The selection of equipment unaffected by the fire is plant-specific and can be determined by performing a set of sensitivity analyses to identify the most limiting case for equipment unavailability. The truncation limits used to perform CCDP quantification should be documented as part of this calculation package.

7.5.1.2 Step 1.2: Quantify CDF Frequencies

In this step, the generic/updated compartment fire ignition frequencies provided in Task 6 are combined with the appropriate compartment CCDP to quantify compartment CDF values. If the initial/updated compartment fire ignition frequencies provided in Task 6 and the initial/updated HRA values provided in Task 12 (including any insights from the HRA dependency analysis) were incorporated into the initial/updated Fire PRA Model using the Task 5 procedure, compartment CDF values can be calculated directly. In order to use the model for future applications, additional CDF calculations may be performed to address the unavailability of one or more trains and/or systems that are unaffected by the fire (i.e., intact train and/or systems). The selection of equipment unaffected by the fire is plant-specific and can be determined by performing a set of sensitivity analyses to identify the most limiting case for equipment unavailability. The truncation limits used to perform CDF quantification should be documented as part of this calculation package.

7.5.1.3 Step 1.3: Quantify ICDP Values (Optional)

In this step, the CDF values involving the unavailability of intact trains and/or systems are used to calculate the ICDP values. The ICDP values are quantified as the product of the CDF and a characteristic exposure time (e.g., maximum allowed outage time) associated with the most limiting case of unavailability of equipment unaffected by the fire. For example, if a fire in a compartment fails offsite power, the unavailability of a diesel generator may be the most limiting case. The maximum allowed outage time for a diesel generator would be the characteristic exposure time.

7.5.2 Step 2: Quantify LERF Model

In this step, the initial/updated Fire PRA Model developed in Task 5, the initial/updated HRA values provided in Task 12 (including any insights from the HRA dependency analysis), and the generic/updated fire ignition frequencies developed in Task 6 are used to quantify LERF frequencies for each fire compartment. The Task 5 procedure provides methods for implementing temporary or permanent changes to the Internal Events PRA logic models to calculate fire-induced LERF/CLERP for each compartment. The generic/updated compartment fire ignition frequencies provided in Task 6 are combined with the appropriate compartment CLERP values to quantify compartment LERF values.

Alternatively, the generic/updated compartment fire ignition frequencies provided in Task 6 and the initial/updated HRA values provided in Task 12 (including any insights from the HRA dependency analysis) may be incorporated into the initial/updated Fire PRA Model developed in Task 5. For this option, compartment LERF values may be calculated directly. Calculation of fire-induced CLERP for each compartment will not be necessary and Step 2.1 can be skipped. Table 7-1 summarizes inputs and outputs for each quantitative screening task.

7.5.2.1 Step 2.1: Quantify CLERP Model

In this step, the initial/updated Fire PRA Model developed in Task 5 and the initial/updated HRA values provided in Task 12 (including any insights from the HRA dependency analysis) will be used to quantify CLERP values for each fire compartment. The Task 5 procedure provides methods for implementing temporary or permanent changes to the Internal Events PRA logic models to calculate fire-induced LERF/CLERP for each compartment. In order to use the model for future applications, additional CLERP calculations may be performed to address the unavailability of one or more trains and/or systems that are unaffected by the fire (i.e., intact train and/or systems). The selection of equipment unaffected by the fire is plant-specific and can be determined by performing a set of sensitivity analyses to identify the most limiting case for equipment unavailability. The truncation limits used to perform CLERP quantification should be documented as part of this calculation package.

7.5.2.2 Step 2.2: Quantify LERF Frequencies

In this step, the initial/updated compartment fire ignition frequencies provided in Task 6 are combined with the appropriate compartment CLERP to quantify compartment LERF values. If the generic/updated compartment fire ignition frequencies provided in Task 6 and the initial/updated HRA values provided in Task 12 (including any insights from the HRA dependency analysis) were incorporated into the initial/updated Fire PRA Model developed in Task 5, compartment LERF values could be calculated directly. In order to use the model for future applications, additional LERF calculations may be performed to address the unavailability of one or more trains and/or systems that are unaffected by the fire (i.e., intact train and/or systems). The selection of equipment unaffected by the fire is plant-specific and can be determined by performing a set of sensitivity analyses to identify the most limiting case for equipment unavailability. The truncation limits used to perform LERF quantification should be documented as part of this calculation package.

7.5.2.3 Step 2.3: Quantify ILERP Values (Optional)

In this step, the LERF values that involve the unavailability of intact trains and/or systems are used to calculate the ILERP values. The ILERP values are quantified as the product of the LERF and a characteristic exposure time (e.g., maximum allowed outage time) associated with the most limiting case of unavailability of equipment unaffected by the fire. For example, if a fire in a compartment fails offsite power, the unavailability of a diesel generator may be the most limiting case. The maximum allowed outage time for a diesel generator would be the characteristic exposure time.

7.5.3 Step 3: Quantitative Screening

In this step, quantified compartment CDF, LERF, ICDP (optional), and ILERP (optional) values are compared against the quantitative screening criteria provided in Tables 7-2 and 7-3. Compartments that fall below all the criteria in Tables 7-2 and 7-3 are marked as screened in the Fire PRA Database. The CDF, LERF, ICDP (optional), and ILERP (optional) criteria in Table 7-2 should be reduced, as necessary, to meet the criteria in Table 7-3. A list of screened compartments, with the basis for exclusion, Should be documented as part of this calculation package. In any case, screening decisions should always be in the conservative direction. See Appendix D for bases for quantitative screening criteria. The risk contribution for the screened compartments can be neglected in subsequent screening steps and in the final fire risk quantification by setting the frequencies for the screened compartments to zero in the model. However, the logic models for the screened compartments remain intact and the risk contribution for the screened compartments can be restored by setting the frequencies back to nominal values.

Table 7-2
Quantitative Screening Criteria for Single Fire Compartment Analysis

Quantification Type	CDF and LERF Compartment Screening Criteria	ICDP and ILERP Compartment Screening Criteria (Optional)
Fire Compartment CDF	CDF < [Highest Fire Ignition Frequency] * [CCDP for case where the General Plant Transient Internal Event Initiating Event is set to 1.0 and all other Internal Events Initiating Events are set to 0.0] *Note: This criterion should be reduced, as necessary, to ensure that the CDF criterion in Table 7-3 is met.*	
Fire Compartment CDF with Intact Trains/Systems Unavailable		ICDP < 1.0E-7 *Note: This criterion should be reduced, as necessary, to ensure that the ICDP criterion in Table 7-3 is met*
Fire Compartment LERF	LERF < [Highest Fire Ignition Frequency] * [CLERP for case where the General Plant Transient Internal Event Initiating Event is set to 1.0 and all other Internal Events Initiating Events set to 0.0] *Note: This criterion should be reduced, as necessary, to ensure that the LERF criterion in Table 7-3 is met*	
Fire Compartment LERF with Intact Trains/Systems Unavailable		ILERP < 1.0E-8 *Note: This criterion should be reduced, as necessary, to ensure that the ILERP criterion in Table 7-3 is met*

Table 7-3
Quantitative Screening Criteria for All Screened Fire Compartments

Quantification Type	Screening Criteria
Sum of CDF frequencies for all screened fire compartments.	< 0.1 * [Internal Event Average CDF]
Sum of LERF frequencies for all screened fire compartments	< 0.1 * [Internal Event Average LERF]
Sum of ICDP probabilities for all screened fire compartments	< 1.0E-06
Sum of ILERP probabilities for all screened fire compartments	< 1.0E-07

7.6 Uncertainty

An important aspect of the fire risk requantification effort is the identification and, where possible, inclusion of uncertainties in the fire risk results. The ultimate product of the quantitative screening task is the quantification of the Fire PRA plant model for calculating CDF/CCDP and LERF/CLERP for fire ignition events. As such, the Quantitative Screening Task contributes uncertainties to the process, all of which can be categorized under one major overall type of uncertainty; i.e., modeling uncertainty. That is, there is the overall uncertainty as to whether the quantification screening process result is an adequate model for calculating the CDF/CCDP and LERF/CLERP for fire ignition events.

This overall uncertainty can be considered to have five major sources of uncertainty in carrying out the quantitative screening task. These are:

- The underlying uncertainties associated with the Internal Events PRA upon which the Fire PRA Model is largely based. In particular, there is an issue as to whether the Internal Events PRA, with all its uncertainties and assumptions as modified by this procedure, is sufficient to base the development of the Fire PRA Model.
- The uncertainty of whether all the relevant fire ignition events and sequences are included in the model, and whether any new events have been appropriately mapped to the PRA model.
- The uncertainty of whether the model appropriately contains all the relevant modeling of equipment failures and human actions, including the potential effects of spurious operation or failure of equipment.
- The uncertainty of whether the truncation limits imposed by the quantification process are sufficiently low to achieve acceptable levels of accuracy.
- The uncertainty of whether the assumed unavailability of systems/equipment for ICDP and ILERP calculations appropriately characterizes the limiting conditions for risk-informed applications.

With the exception of a few cases, sensitivity analyses could be used to address these sources of uncertainty. Technical reviews are expected to address the above uncertainties so that the final Fire PRA Model is considered sufficient to determine the CDF/CCDP/ICDP and LERF/CLERP/ILERP for fire ignition events. No quantitative assessment of these modeling uncertainties is expected, with the exception of a few sensitivities, as noted above. Note that the data uncertainties associated with the model are addressed elsewhere.

8
SCOPING FIRE MODELING (TASK 8)

Scoping fire modeling is the first task in the fire PRA framework where fire modeling tools are used to identify ignition sources that may impact the fire risk of the plant. Screening some of the ignition sources in the room, along with the application of severity factors to the unscreened ones, may reduce the compartment fire frequency previously calculated in Task 6.

8.1 Purpose

This task has two main objectives:

- To screen out those fixed ignition sources that do not pose a threat to the targets within a specific fire compartment, and
- To assign severity factors to unscreened fixed ignition sources.

With this task, the level of effort for detailed fire propagation analysis may be reduced. Furthermore, applying severity factors may reduce the compartment frequency calculated in Task 6, resulting in some compartments being screened before detail fire modeling studies are conducted.

8.2 Scope

This procedure contains instructions for identifying and screening fixed ignition sources. The procedure also provides some general notes on how to assign severity factor values for ignition sources included in the generic fire frequency model.

The procedure recommends two work forms: (1) the walkdown screening form, and (2) the zone of influence (ZOI) form. The walkdown screening form should be filled during the walkdown. It compiles information about the ignition sources relative to nearby equipment. The ZOI forms specifies a zone of influence for ignition sources in a specific compartment.

The focus of this task is twofold.

1. Refine the information about fixed ignition sources. The direct fire effects on fire PRA components or circuits are not addressed. The basic assumption about loss of all fire PRA equipment (including cables) present in the fire compartment is still maintained in this task. That is, no equipment in the PRA equipment list is screened. Therefore, the location and specific characteristics of the cables carrying fire PRA equipment-related circuits are not needed for performing this task. However, if such knowledge is available, analysts are encouraged to use it during fixed ignition source screening.

2. Application of severity factors to each ignition source. After applying the severity factor, the compartment fire frequencies calculated in Task 6 are reevaluated.

8.3 Background Information

8.3.1 General Task Objectives and Approach

This task is the first attempt at identifying fire scenarios in terms of ignition sources and propagation patterns. In the first quantitative screening task, the CDF for each compartment is calculated assuming that all the targets within the compartment would fail due to fire-generated conditions. In this task, the possibility of the fixed ignition sources causing the postulated damage is examined. Those that cannot cause target damage are screened out from further analysis. For the purpose of this task, a target can be considered:

1. The closest equipment (including cabinets and cables trays) to the fixed ignition source if no specific knowledge about target location in the compartment is currently available; or
2. Known fire PRA targets in the compartment, if the specific target locations is known.

A set of conservative fire modeling calculations are performed for predicting fire conditions near a target in order to assess if target damage or ignition can occur. The analyst can then be confident that an ignition source can be screened out if no relevant targets receive thermal damage. Ignition sources that are part of the Fire PRA Equipment List cannot be screened. For the ignition sources that do not screen out, the severity level of the fire needed to cause damage is established and the corresponding severity factor is estimated. The severity factor is used to adjust the fire frequencies for a second round of quantitative screening. Technical details on the determination of severity factors are provided in Appendix E.

In general terms, the direct impact of a fire on a target can be described with the following five mechanisms:

1. Engulfed in flames,
2. Within fire plume,
3. Within the ceiling jet,
4. Within the smoke layer, or
5. Within the flame irradiation zone.

Flame temperatures in typical enclosure fires are expected to be between 800°C and 1000°C. These temperatures are above piloted ignition temperatures for many combustibles, including cables. The time for ignition of solid combustibles in contact with flames will depend on its thermophysical properties and the heat flux generated at the flames. Any additional passive fire protection feature, such as barriers, shields, or retardant substances, can also affect the damage or ignition time.

A fire plume is a buoyant stream of hot gases rising above a localized area undergoing combustion into surrounding space of essentially uncontaminated air. Therefore, depending on the fire intensity and elevation of the equipment above it, targets located within this region are subjected to a distinct and relatively high level of thermal hazard.

The ceiling jet refers to the relatively rapid gas flows in a shallow layer beneath the ceiling surface that is driven by buoyancy of hot combustion products. Ceiling jets form when a fire plume impinges under a ceiling and hot gasses spread away. Temperatures in the ceiling jet are expected to be lower than in the fire plume. Still, as in the case of the plume, targets located within the ceiling jet are subjected to a distinct thermal hazard. Notice, however, that ceiling jet applications in nuclear power plants are limited due to the generally large number of cables, conduits, pipes, and structural members interfering with ceiling jet flows.

A smoke layer usually forms below the ceiling jet. Depending on the fire intensity, the smoke layer temperature may reach damage or ignition temperatures of many materials. The fire plume transports the heat and smoke generated in the combustion process into the smoke layer, which is affected by the air injected into or extracted from the compartment. The smoke layer temperature is usually lower than the ceiling jet temperature due to air entrainment.

Finally, diffusion flames usually irradiate heat to the surroundings. This irradiation is mainly emanated from the soot particles inside the flame. The intensity of this impinging heat flux decreases with distance. Therefore, there is a critical region near a flame where a target would be adversely affected by incident heat flux.

Table 8-1 recommends ZOIs and severity factors calculation methods for the ignition source bins in the frequency model. Note that the severity factor for all the frequency bins are not calculated based on fire modeling.

The type of exposure will depend on the location of the target with respect to the fire. Clearly, during the course of a fire event, a target may be exposed to more than one of the conditions listed above. However, for the purpose of this task, a target is assumed to be subjected to only one type of exposure with constant flammability and thermophysical characteristics. The fire ZOI is defined using fire models to determine the regions where fire conditions will cause target damage. Technical details on the determination of the ZOI are provided in Appendix F.

Table 8-1
Zone of Influence and Severity Factor Recommendations

ID	Location	Ignition Source	Ignition Source Screening Approach	Recommended Severity Factor
1	Battery Room	Batteries	Calculate ZOI using Figure F-2	Electric motors
2	Containment (PWR)	Reactor coolant pump	Do not screen in Task 8	Assume 1.0
3	Containment (PWR)	Transients and hotwork	Do not screen in Task 8	Assume 1.0
4	Control Room	Electrical cabinets	Calculate ZOI using Figure F-2	Applicable electrical cabinet
5	Control/Auxiliary/Reactor Building	Cable fires caused by welding and cutting	Do not screen in Task 8	Assume 1.0
6	Control/Auxiliary/Reactor Building	Transient fires caused by welding and cutting	Do not screen in Task 8	Assume 1.0
7	Control/Auxiliary/Reactor Building	Transients	Do not screen in Task 8	Assume 1.0
8	Diesel Generator Room	Diesel generators	Do not screen in Task 8	Assume 1.0
9	Plant-Wide Components	Air compressors	Do not screen in Task 8	Assume 1.0
10	Plant-Wide Components	Battery chargers	Calculate ZOI using Figure F-2	Electrical cabinets
11	Plant-Wide Components	Cable fires caused by welding and cutting	Do not screen in Task 8	Assume 1.0
12	Plant-Wide Components	Cable run (self-ignited cable fires)	Do not screen in Task 8	Assume 1.0
13	Plant-Wide Components	Dryers	Calculate ZOI using Figure F-2	Transients
14	Plant-Wide Components	Electric motors	Calculate ZOI using Figure F-2	Electric motors

Table 8-1
Zone of Influence and Severity Factor Recommendations (Continued)

ID	Location	Ignition Source	Ignition Source Screening Approach	Severity Factor Recommended
15	Plant-Wide Components	Electrical cabinets	Calculate ZOI using Figure F-2	Electrical cabinets
16	Plant-Wide Components	High-energy arcing faults	Do not screen in Task 8	Assume 1.0
17	Plant-Wide Components	Hydrogen tanks	Do not screen in Task 8	Assume 1.0
18	Plant-Wide Components	Junction box	Calculate ZOI using Figure F-2	Electric motors
19	Plant-Wide Components	Miscellaneous hydrogen fires	Do not screen in Task 8	Assume 1.0
20	Plant-Wide Components	Off-gas/H_2 recombiner (BWR)	Do not screen in Task 8	Assume 1.0
21	Plant-Wide Components	Pumps	Do not screen in Task 8	Assume 1.0
22	Plant-Wide Components	RPS MG sets	Calculate ZOI using Figure F-2	Electric motors
23a	Plant-Wide Components	Transformers (oil filled)	Do not screen in Task 8	Assume 1.0
23b	Plant-Wide Components	Transformers (dry)	Calculate ZOI using Figure F-2	Electric motors
24	Plant-Wide Components	Transient fires caused by welding and cutting	Do not screen in Task 8	Assume 1.0
25	Plant-Wide Components	Transients	Do not screen in Task 8	Assume 1.0
26	Plant-Wide Components	Ventilation subsystems	Calculate ZOI using Figure F-2	Assume 1.0
27	Transformer Yard	Transformer - catastrophic	Do not screen in Task 8	Assume 1.0
28	Transformer Yard	Transformer - noncatastrophic	Do not screen in Task 8	Assume 1.0
29	Transformer Yard	Yard transformers (Others)	Do not screen in Task 8	Assume 1.0
30	Turbine Building	Boiler	Do not screen in Task 8	Assume 1.0

Table 8-1
Zone of Influence and Severity Factor Recommendations (Continued)

ID	Location	Ignition Source	Ignition Source Screening Approach	Severity Factor Recommended
31	Turbine Building	Cable fires caused by welding and cutting	Do not screen in Task 8	Assume 1.0
32	Turbine Building	Main feedwater pumps	Do not screen in Task 8	Assume 1.0
33	Turbine Building	T/G excitor	Do not screen in task 8	Assume 1.0
34	Turbine Building	T/G hydrogen	Do not screen in Task 8	Assume 1.0
35	Turbine Building	T/G oil	Do not screen in Task 8	Assume 1.0
36	Turbine Building	Transient fires caused by welding and cutting	Do not screen in Task 8	Assume 1.0
37	Turbine Building	Transients	Do not screen in Task 8	Assume 1.0

Note that transient combustibles are not screened in this task. This is because the characterization of transient fire sources, i.e., fire size, type, duration, and location, necessitate plant-specific considerations that demand level of effort beyond that anticipated for this task. Analysis of the impact of transient combustibles is discussed in Task 11, Detailed Fire Modeling, in order to avoid postulating them in rooms that may be screened in previous tasks.

An important part of this task is a plant walkdown to ensure that the specific conditions of each fire compartment are obtained and included in the analysis. During the walkdown, the analysts may attempt to screen out some of the ignition sources based on clear indications that no targets could be damaged. If such qualitative screening is attempted, the analysts may need to adhere to the following.

- The fixed ignition source screening conducted in this task relies exclusively on thermal damage. Therefore, fixed ignition sources considered capable of high energy (explosive) events should not be screened in this task. Examples of such fixed ignition sources are:
  - High voltage transformers (480V or higher),
  - Switchgears (480V or higher) and diesel generator cabinets supplied with AC power by the running diesel generator (e.g., DG excitation cabinets, DG switchgear, and some DG control cabinets), and
  - Diesel generators.
- Because of their position on the electrical lineup, most motor control centers will have adequate breaker protection and may be screened out if they are not vented. However, analysts should consult plant drawings or knowledgeable plant personnel to ascertain whether exceptions exist.

8.3.2 Assumptions

The following is a list of assumptions used to develop the procedure for this task.

- Altered conditions of a fixed ignition source that may lead to a fire more severe than the most severe postulated fires are very unlikely to occur. The altered conditions of a fixed ignition source may be addressed as part of the transient combustible fire analysis.
- Equipment damage can only occur from excessive thermal exposure.
- No consideration is given to duration of exposure, i.e., a one-second 625°F fire is as capable of damage as a 30-minute 625°F. As a screening task, this conservatism is acceptable. In detailed fire modeling, Task 11, the element of time should be included in the analysis, which generally includes a growing heat release rate profile and time to target heating.
- No credit is given to the possibility of suppressing a fire before damage.
- All targets are a part of the PRA equipment, and loss of a target would always lead to an initiating event or cause a failure modeled for CCDP calculations, or both.

8.4 Task Interfaces

8.4.1 Input From Other Tasks

The list of unscreened fire compartments from previous screening tasks and the Fire PRA Equipment List from Task 2 are needed for this task.

8.4.2 Additional Plant Information Needed to Support this Task

The following documentation may support the walkdown recommended in this task:

- List of equipment in compartments, and
- Equipment layout drawings.

Information that an analyst can use to establish the characteristics of a credible fire associated with a specific ignition source is also needed in this task. The exact nature of the information will depend on the specific characteristics of the ignition source. The following is a sample of such information:

- Quantity of the oil maintained inside rotating machinery,
- Power and voltage of a motor,
- Power of electrical cabinets, and
- Quantity and nature of combustible and flammable materials maintained in an enclosure.

8.4.3 Walkdowns

At least one walkdown is needed to support this task. The purpose of the walkdown is to identify fixed ignition sources in each compartment that may be screened. The analyst should visit plant compartments in order to:

- review the location of ignition sources with respect to the targets,
- ascertain that no potential target exists within ZOIs of the screened fixed ignition source(s), and
- verify if proper assumptions were made in characterizing the compartment, the ignition source, and the target.

8.4.4 Outputs to Other Tasks

The output of this task can be summarized as follows:

- Revised compartment fire frequency after screened fixed ignition sources and application of severity factors. The revised compartment fire frequencies are used in future quantitative screening tasks.
- List of unscreened fixed ignition sources within each fire compartment and associated severity factors. This information is used in the detailed fire modeling (Task 11) for defining and quantifying fire scenarios.

8.5 Procedure

The following steps describe the procedure intended for this task.

Step 1: Preparation for walkdown

Step 2: Plant walkdown

Step 3: Verification of screened ignition sources

Step 4: Calculation of severity factors

Step 5: Calculation of revised compartment fire frequency

8.5.1 Step 1: Preparation for Walkdown

Prior to walkdown, the analyst should prepare a list of fixed ignition sources for each fire compartment that need to be examined for screening. This list may be obtained from the results of Tasks 2 and 6. Once the fixed ignition source types are known (i.e., electrical cabinets, pumps with lubricating oil, etc.), a ZOI is calculated for each fixed ignition source type. Calculating ZOIs requires compartment information such as size and ceiling height that may be obtained from plant documentation prior to plant walkdown. The automated ZOI form can be used for determining the ZOI. In practice, it is expected that one form is necessary for each compartment.

Calculating ZOIs for fixed ignition source types requires bounding heat release rates and damage/ignition temperatures, as well as fire models to calculate damage/ignition distances. Experience has shown that some ignition sources can be screened out based on simplistic and conservative analysis. For example, ignition sources that are not near any targets can be screened out even when a very large heat release rate is assigned to those sources.

8.5.1.1 Step 1.1: Estimate Heat Release Rate for Fixed Ignition Source Screening

Heat release rate is a key parameter in establishing the characteristics of potential fire scenarios associated with an ignition source. The recommended heat release rate value for screening is the *98th percentile* of the probability distributions for the different ignition sources listed in Appendix G.

The ability of a fixed ignition source to damage or ignite the first (i.e., closest) target is the main basis for screening ignition sources in this task. Therefore, if it can be ascertained that a potential fire initiated by an ignition source is capable of igniting an intervening combustible, the source may not be screened. This limits the need for any complicated analysis of multiple fires in this task. The heat release rate of electrical cables is not addressed in this task because it is assumed that self-ignited cable fire is possible. Therefore, cables should not be screened in Task 8.

8.5.1.2 Step 1.2: Target and Intervening Combustible Damage and Ignition Criteria

Information on damage criteria for nuclear plant components has been difficult to obtain.

The identification of nearest ignition and damage targets will most often involve identifying cables as both ignition and damage targets. Often the same cable will represent both targets. For cables, the ignition and damage criteria can be assumed to be the same. Heat flux and temperature criteria for damage and/or ignition are provided in Table 8-2. More details on damage criteria is provided in Appendix H.

Table 8-2
Damage Criteria for Cables

Screening Criteria to Assess the Ignition and Damage Potential of Electrical Cables		
Cable Type	**Radiant Heating Criteria**	**Temperature Criteria**
Thermoplastic	6 kW/m^2 (0.5 BTU/ft^{2}s)	205°C (400°F)
Thermoset	11 kW/m^2 (1.0 BTU/ft^{2}s)	330°C (625°F)

The following notes are provided for dealing with ignition sources and targets.

- Cables in conduit will be considered potential damage targets, but not ignition targets. Cables in conduit will not contribute to fire growth and spread. The conduit will be given no credit for delaying the onset of thermal damage.
- Cables coated by a fire-retardant coating will be considered as both thermal damage and fire spread targets. For the purposes of this screening task, no credit will be given to the coating for delaying or preventing the onset of damage and/or ignition.
- In identifying damage targets, do not include components directly within or associated with the fire ignition source itself. The fire ignition source will be assumed to be damaged given any fire involving itself as the source, so further evaluation of the components as damage targets is unnecessary.
- Example: for an electrical panel fire, all equipment and components within the panel will be assumed to fail. Per the definitions for the counting process, a panel will be defined as a distinct vertical section in this context.
- If a scenario should arise involving solid-state control components as a thermal damage target, the failure criteria applied in screening are 0.25 BTU/ft^{2}s and 200°F (See Appendix H on damage criteria). The criteria for ignition of the components will assume properties similar to thermoplastic cables (0.5 BTU/ft^2 and 400°F).
- Pipes and water tanks constructed of ferrous metal will be considered invulnerable to fire damage.
- For major components, such as motors, valves, etc., the fire vulnerability is assumed to be limited by the vulnerability of the power, control, and or instrument cables supporting the component.
- Passive components (e.g., flow check valves) will be considered invulnerable to fire.

In summary, if using the 98th percentile heat release rate value in generating the ZOI does not generate the temperatures or heat fluxes listed in the criteria above, the ignition source can be screened out.

8.5.1.3 Step 1.3: Develop Zones of Influence

Developing ZOIs necessitates use of a model that can calculate damage or ignition distances given heat release rate and damage/ignition temperatures. Numerous tools are available that are capable of estimating this behavior that range from simple hand calculations to zone models and computational fluid dynamic models. Some of these models include:

- Hand calculations (also referred as engineering calculations). For example, see References [8.1] and [8.2].
- Zone models. Example of zone models are COMPBRN [8.3], CFAST [8.4] and MAGIC (by Electricite de France).
- Computational fluid dynamics. For example, see Reference [8.5].

All the tools, except for hand calculations, are computer programs that employ sophisticated computational algorithms. The procedures described for this step are applicable to all these tools.

However, the fire modeling tools described in References [8.1] and [8.2] (hand or engineering calculations) may be sufficient for achieving the goals in this task. The use of zone and field fire models is not recommended for this screening task. A spreadsheet template has been created to perform these calculations. The compartment information, heat release rate, and damage/ignition data established are this step is used as input to the template to estimate the fire conditions at the target or intervening combustibles. It is recommended that the analyst be familiar with the calculations and use engineering judgment when interpreting the results, since most of the equations are semi-empirical correlations with specific limits of application.

Appendix F provides technical details on the development of the ZOI. Recommended walkdown forms can also be found in Appendix F.

8.5.2 Step 2: Plant Walkdown

A plant walkdown is recommended to (1) verify and add to the information gathered from paper and electronic documents and ensure as-built conditions of the plant are incorporated in the analysis, and (2) establish the basis for screening certain ignition sources.

It is important that the analysts test the approach adopted for conducting the walkdown to ensure that complete and pertinent information is collected. The analysts may perform a test walkdown, possibly even analyzing a compartment in detail, to ensure that the needed information will be collected.

A walkdown form is recommended in Appendix F to collect and analyze the information relevant to this task. The form is intended to contain information about the heat release rate of the ignition sources in the compartment, their damage criteria, and whether or not the source should be screened. The form also will contain information about the basis for screening or retaining a source.

The following notes about screening of ignition sources may need to be emphasized.

- If an intervening combustible or target is close to the ZOI of an ignition source, the ignition source should not be screened out.
- Individual cubicles within a motor control center and switchgear should not be screened out, because the entire electrical cabinet is either connected to the same bus bar or internally connected to each other. The entire set of cubicles associated with the same bus bar should be combined as one bus bar.
- Control panel segments that are internally connected should be combined as one larger ignition source.
- No cables should be screened out in this task.

Note: For unscreened ignition sources, analysts should document the location of the equipment considered as a target. That is, document the distance from the ignition source to the target, and if the target is expected to be engulfed in flames, within fire plume, the ceiling jet, the smoke layer, or the flame irradiation zone. This information will be used later in this task to calculate severity factors.

Further information about conducting a walkdown may be found in the support task for plant walkdowns.

8.5.3 Step 3: Verification of Screened Ignition Sources

Following the walkdown, the fixed ignition sources identified as incapable of damaging or igniting external cables and/or components need to be reviewed for potential risk-significance prior to screening. A nondamaging fire source may be significant to fire risk if it also is a potential target, i.e., it is a PRA component(s). This impact may happen in one of two ways.

1. If loss of the fire source affects one PRA component and the fire-induced loss of the fire source is a larger contributor to risk than its random failure.

2. If the loss of fire source affects two or more redundant PRA components or subsystems.

8.5.3.1 Loss of the Fire Source Affects One PRA Component

In some cases, the screened-out ignition source may also be a target considered in the core damage frequency calculations. Therefore, before these ignition sources are eliminated from further consideration in the fire PRA, it is important to verify that fire damage to the ignition source itself is not risk-significant. Switchgear and MCC fires are sometimes found to have minimal impact on other items, yet by themselves they are important contributors to fire risk.

To ensure that a component is not prematurely screened out, fire ignition frequency should be compared with component unavailability from internal causes. The following procedures addresses this issue.

- Verify that the fixed ignition source is part of the PRA equipment.
- Review the data used to estimate the unavailability of the fixed ignition source to verify that component ignition is part of the failure data used in the statistical analysis. If indeed fire ignition is part of the unavailability analysis, the fixed ignition source can be screened out from the analysis.

If fire ignition is not part of the unavailability data, the fixed ignition source may be screened out if its ignition frequency is not risk-significant. This can be determined by first establishing whether or not an initiating event (including manual trip) may result from the failure of the fixed ignition source. If an initiating event is possible, the fire ignition frequency should be compared with the initiating event frequency. If the internal events analysis includes recovery of the initiating event, the unrecovered frequency should be used for the comparison because fire damage is not recoverable. If the ignition frequency is comparable or greater than the initiating event frequency, the fixed ignition source should be retained for further analysis. Otherwise, it may be screened out. If it can be ascertained that an initiating event is impossible, the ignition frequency should be converted to unavailability and compared with the unavailability due to internal events. To achieve this, a conservative repair time duration should be estimated for the component. The product of ignition frequency and repair time duration would yield the equivalent unavailability of the component due for fire ignition. If this new unavailability is comparable with or greater than the internal events unavailability of the component, the new unavailability may be added to the internal events analysis. Otherwise, the ignition source may be screened out.

8.5.3.2 Loss of Fire Source Affects Two or More Redundant Components Associated with the Fire PRA Equipment List

Do not screen a fixed ignition source when its loss has the potential of affecting two or more redundant components associated with the Fire PRA Equipment List. An example of such a fixed source is a panel that may contain all controls for offsite power or service water pumps credited as a fire PRA component.

8.5.4 Step 4: Calculation of Severity Factors

A severity factor is calculated for each unscreened fixed ignition source. In general, severity factors assigned in this task will range from 0.02 to 1.0 because the screening criteria is based on the 98th percentile of the probability distributions for heat release rate. Readers are referred to Appendix E for technical details on severity factors.

At this point, the analyst should have a list of unscreened ignition sources with the respective distance to the target and fire condition affecting it, as indicated at the end of Step 2. For each ignition source in the list, the heat release rate necessary for damage is calculated and the severity factor is assigned based on the heat release rate. The hand calculations that can be used to determine the heat release rate necessary for damage are described in Appendix F.

8.5.5 Step 5: Calculation of Revised Compartment Fire Frequency

Revise the compartment fire frequencies, $\lambda_{J,IS}$, developed in Task 6 after removing the fixed ignition sources screened in Step 3:

$$\lambda_{J,L} = \sum_{i=1}^{N} \lambda_{IS,J} \cdot SF_{IS,J} \ ,$$

where $\lambda_{IS,J}$ is the compartment frequency calculated in Task 6, and $SF_{IS,J}$ is the severity factor for ignition source IS in compartment J. Notice that the multiplication of the generic frequency times the location and ignition source weighting factors is already available from Task 6, fire ignition frequency.

Table F-1 describes how the walkdown, screening, and determination of severity factors is summarized and automated in a spreadsheet.

8.6 Uncertainty

The uncertainties in the results of this task are reflected in the choice of ignition sources retained and the severity factor incorporated in the fire frequency estimation. The following factors influence the uncertainties in the results.

- Heat release rate–since bounding values are used, the impact of uncertainties in this parameter on the results is expected to be minimal.
- Severity factor–the severity factor assigned to each unscreened ignition source is Task 8 is based on fire modeling calculations for determining the heat release rate that can generate target damage. This value is subjected to the uncertainties inherent to the use of fire modeling tools.
- Damage criteria–similar to the heat release rate, since bounding values are used, the impact of uncertainties in this parameter on the results is expected to be minimal.
- Walkdown process–the style, level of effort expended, and analysts' error rate would influence the level of uncertainties in the results.

8.7 References

8.1 *Fire Modeling Guide for Nuclear Power Plant Applications*. Electric Power Research Institute, TR-1002981.

8.2 Fire Dynamics Tools (FDT): Quantitative Fire Hazard Analysis Methods for the U.S. Nuclear Regulatory Commission Fire Protection Inspection Program. NUREG-1805, Draft Report for Comments.

8.3 COMPBRN-III: *An Interactive Computer Code for Fire Risk Analysis*, EPRI NP_7282, May 1991.

8.4 Peacock, R., Jones, W., Reneke, P., Forney, G. "CFAST, The Consolidated Model of Fire Growth and Smoke Transport," NIST Technical Note 1299, February 1993.

8.5 McGrattan, K., Baum, H., Rehm, R., Hamins, A., Forney, G. Fire Dynamics Simulator, Technical Reference Guide, NISTIR-6467. January 2000.

9
DETAILED CIRCUIT FAILURE ANALYSIS (TASK 9)

9.1 Purpose

Conducting a Fire PRA in accordance with this methodology necessitates an analysis of fire-induced circuit failures beyond that typically conducted during original Fire PRAs. The circuit analysis elements of the project are conducted in three distinct phases:

1. Fire PRA cable selection (Task 3),
2. Detailed circuit failure analysis (Task 9), and
3. Circuit failure mode likelihood analysis (Task 10).

This chapter provides methods and instructions for conducting the second phase of circuit analysis–detailed circuit failure analysis (Task 9). Task 9 determines equipment responses to specific cable failure modes. These relationships are then used to screen out cables that cannot prevent a component from completing its credited function. The output of this task supports the quantitative screening process under Task 7.

9.2 Scope

Chapter 9 provides approaches and technical considerations for identifying the potential response of circuits[1] and equipment to specific cable failure modes associated with fire-induced damage. This task contains the following key elements:

- Determine the component response to postulated conductor/cable failure modes, and
- Screen out cables that do not impact the ability of a component to complete its credited function.

This task does not address implementation of plant-specific quality assurance requirements or configuration control issues that might apply. Nor is it intended that this procedure validate the accuracy of plant-specific data extracted from plant drawings, documents, or databases. Each plant should follow appropriate quality assurance, administrative, and configuration control procedures applicable to the work being conducted. The need to validate input *source documents* should be addressed as part of assembling the prerequisite information in Step 1.

[1] The term "circuit" and "cable" are often used interchangeably for fire-related circuit analyses. A circuit is comprised of electrical components, subcomponents, and cables/connection wire. Within the context of fire-induced equipment failures, it is understood that "circuit failure" or "circuit response" refers to the impact of "cable failure modes" that may affect the behavior of related components and subcomponents in a complete circuit.

9.3 Background Information

9.3.1 General Task Objectives and Approach

The cable failure modes of particular interest here include *shorts-to-ground* and *hot shorts*. Open circuit failures[2], as the initial cable failure mode, will typically not be considered in this procedure. However, an open circuit condition resulting from the predicable operation of a circuit protection device (e.g., circuit breaker and fuse) in response to fire-induced short circuits will be considered with regard to its impact on the operation of the component(s) affected by the cable under consideration.

An *Equipment Failure Response Report* is a consolidated list of possible component responses resulting from fire damage to the cable. This aspect of the circuit analysis is fundamentally a deterministic study and does not include failure mode probabilities (the probabilistic analysis of circuit failure modes is covered in Chapter 10). However, the results of this task will serve as the basis for estimating the likelihood of specific equipment functional failures at a compartment or scenario level.

Development of the Equipment Failure Response Report involves three principal steps. Generic instructions for completing these steps are provided in this chapter. Figure 9-1 provides a summary of the task work flow. Before beginning this task, it is important to clearly define how various cable failure modes are handled.

9.3.2 Assumptions

The following assumptions form the basis for this task:

- An Appendix R of 10 CFR Part 50 analysis for the plant has been completed and documented, and is available for identifying equipment failure responses to specific cable failure modes. Additional effort will be necessary to address systems that are not part of the Appendix R of 10 CFR Part 50 analysis, and to address systems/trains for which the Appendix R of 10 CFR Part 50 analysis assumes failure without performing detailed circuit analysis.
- Component analysis packages have been assembled as part of the activities under Task 3, Fire PRA Cable Selection, and are available for use in this task.
- Equipment is assumed to be in its normal expected position or condition at the onset of the fire. Where the status of a component is indeterminate or could change as a result of expected plant conditions, the analysis assumes the worst-case initial conditions.
- Operator actions within the control room (e.g., manipulating a control switch) are considered feasible and allowable for mitigating the effects of cable failures. This is not to be confused with “manual actions” done in the field to reposition equipment.

[2] Within the context of this procedure, “open circuit failure” refers to the loss of continuity due to direct physical damage to the conductor (e.g., melted wire).

- Users of this procedure are knowledgeable and have experience with circuit design and analysis methods. Work under this procedure is assumed to be conducted by or supervised by personnel familiar with circuit failure analysis (i.e., Appendix R of 10 CFR Part 50 safe shutdown analysis or similar).

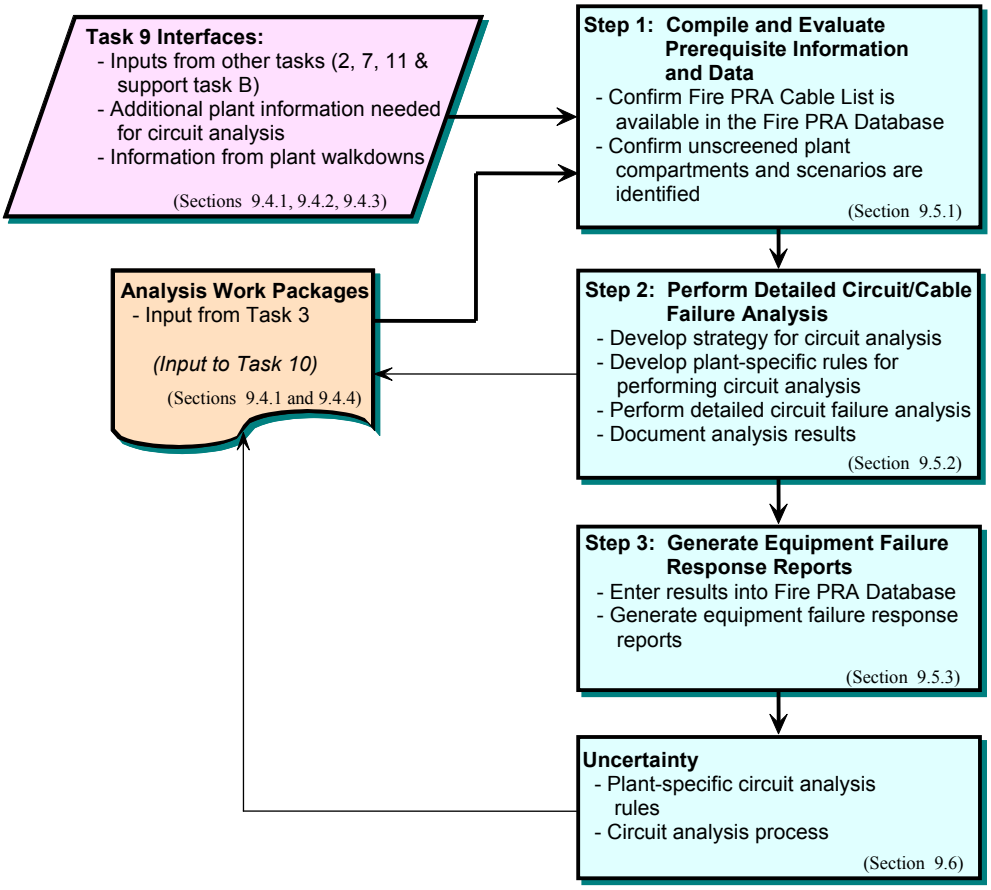

Figure 9-1
Detailed Circuit Failure Analysis Work Flow

9.4 Task Interfaces

9.4.1 Input from Other Tasks

9.4.1.1 Fire PRA Components Selection (Task 2)

The detailed circuit failure analysis task needs, as a prerequisite, the Fire PRA Equipment List from Task 2, Fire PRA Equipment Selection. The Fire PRA Equipment List is used to verify that all fire PRA cables located in the unscreened compartment(s) or raceway(s) are analyzed. In addition, the Fire PRA Equipment List provides the specific functional requirements for each component. Any discrepancies or inconsistencies should be discussed and resolved with the Fire PRA modelers as part of completing the detailed circuit failure analysis.

9.4.1.2 Fire PRA Cable Selection (Task 3)

This detailed circuit failure analysis task needs, as a prerequisite, the list of fire PRA cables from Task 3, Fire PRA Cable Selection. The Fire PRA Cable List is used to identify fire PRA cables routed within unscreened plant locations. In addition, the analysis packages assembled for each component during Task 3 provide the basic documentation needed to complete the detailed circuit analyses.

9.4.1.3 Fire PRA Database System (Support Task B)

The Fire PRA Database System (database structure and relationships) is a prerequisite for Task 9. The database system provides a structured framework for maintaining Fire PRA data. The database is populated with the data and information generated by previously completed tasks, and, in part, will be used to establish the fire PRA equipment and cable locations. The data structure and functional relationships established within the database system are specifically designed to provide the necessary sort and query capability to identify fire compartment contents.

9.4.1.4 Quantitative Screening (Task 7)

Focusing the scope of the detailed circuit failure analyses is accomplished using the preliminary screening results from Task 7, Quantitative Screening.

9.4.1.5 Detailed Fire Modeling (Task 11)

An alternate way to identify the cables requiring detailed analysis is to provide a list of raceways affected by fire within a compartment. Such fire scenario-specific input would be generated from the output of Task 11, Detailed Fire Modeling.

9.4.2 Additional Plant Information Needed to Support this Task

9.4.2.1 Plant Appendix R of 10 CFR Part 50 Safe Shutdown Circuit Analysis

Given the substantial overlap between the Fire PRA Equipment List and Appendix R of 10 CFR Part 50 Safe Shutdown Equipment List, the Appendix R of 10 CFR Part 50 circuit analysis information should be used to the maximum extent possible to support this task. The approach and methods used for the Appendix R of 10 CFR Part 50 circuit analysis will possibly differ from that developed for the Fire PRA. Any differences should be well understood to ensure the Appendix R of 10 CFR Part 50 circuit analysis results are representative and as complete as necessary to meet Fire PRA objectives. The Appendix R of 10 CFR Part 50 circuit analysis might or might not inherently incorporate a “detailed” circuit failure analysis. Additionally, the Appendix R of 10 CFR Part 50 analysis may not contain detailed circuit failure analysis documentation for equipment that is not part of the Appendix R of 10 CFR Part 50 “protected train” for the fire area in question. This too, will need to be confirmed as part of using the Appendix R of 10 CFR Part 50 study results.

9.4.2.2 Other Information and Data

- Component elementary circuit diagrams
- Component cable block diagrams
- Component wiring/connection diagrams
- Electrical distribution system single-line diagrams
- Instrument loop diagrams and block diagrams
- Cable raceway schedules and routing drawings

9.4.3 Walkdowns

Plant walkdowns are not considered a fundamental part of this task. Rather, plant walkdowns should be considered on a case-by-case basis as a way of obtaining necessary information about cable and/or raceway locations.

9.4.4 Outputs to Other Tasks

The Target Equipment Response Reports are used principally as reference information for conducting additional quantitative screenings. Cables are screened based on their potential to impact the desired functionality of a component. Target Equipment Response Reports also serve as input into the probabilistic circuit failure mode likelihood analysis (Task 10).

9.5 Procedure

The purpose of Task 9 is to perform a deterministic failure analysis of the circuits located within each *unscreened* fire compartment/scenario in order to identify those circuits/cables that can adversely affect the requisite functionality of essential equipment/components, and to document the equipment responses to the possible cable failure modes induced by fire damage. This task differs from Task 3 in that the Fire PRA cable selection process is designed to identify and document all of the “important” cables associated with each fire PRA component, whereas Task 9 further refines the analysis by determining the actual functional impact of the postulated cable failure modes. Under certain circumstances, it may be more efficient for the circuits analyst to ascertain the potential functional impacts of the cables as the Fire PRA Cable List is being developed, thus effectively conducting Task 3 and Task 9 concurrently.

The steps below provide methods for performing the detailed circuit analysis of essential cables. Although the instructions cover all aspects of the work, it is strongly recommended that additional plant-specific circuit analysis “rules” be developed before beginning work. As with the cable selection performed under Task 3, plant-specific rules are important to further customize the analysis methodology to fit the specific circumstances and needs of each plant.

9.5.1 Step 1: Compile and Evaluate Prerequisite Information and Data

This step ensures that prerequisite information and data is available before beginning the detailed circuit analyses. Beginning the process of circuit analysis without first having the prerequisite information will reduce efficiency and significantly increase the likelihood of rework.

9.5.1.1 Step 1.1: Confirm Fire PRA Cable List is Available in the Fire PRA Database

Confirm that the fire PRA cables have been identified and input into the Fire PRA Database (outputs from Task 3, Fire PRA Cable Selection, and Support Task B, Fire PRA Database System). Consider the following factors in conducting the verification.

1. It is desirable that fire compartments be associated with plant raceways and, no less important, that plant cables be associated with raceways through which they are routed and endpoint designations to which they terminate. In some cases, cables might be correlated directly to compartments instead of indirectly via raceways, or might only have a correlation to fire areas. These factors can introduce inherent limitations on the ability to conduct compartment-level and scenario-level screening. As a minimum, cables should be correlated to plant fire areas.

2. The Fire PRA Cable List data should include a correlation to specific individual fire PRA equipment.

9.5.1.2 Step 1.2: Confirm Unscreened Plant Compartments and Scenarios are Identified

Determine the scope of equipment requiring a detailed circuit failure analysis.

1. Obtain a listing of unscreened fire compartments/scenarios (output from Task 7, Quantitative Screening). Generate a listing of affected components for each unscreened compartment/scenario (Target Equipment Location Reports).

2. For components requiring a detailed circuit failure analysis, ensure the Fire PRA Database includes equipment identifiers, attributes, normal status, and functional requirements (Output from Task 2, Fire PRA Components Selection).

This step focuses the scope of the detailed circuit analysis. Compartments, scenarios, and equipment not included on the list do not need a detailed circuit failure analysis.

Note that the normal equipment status should be identified as part of the Fire PRA Component Selection (Task 2). If the normal status is indeterminate, the circuit failure analysis should assume the worst case initial conditions. The Fire PRA Equipment List might list a component more than once if it has different functional requirements for different event sequences. In these cases, the detailed circuit analysis should address each case separately, which will usually be limited to two: "Open" and "Closed," or "Running" and "Stopped."

9.5.2 Step 2: Perform Detailed Circuit/Cable Failure Analysis

This step performs a deterministic-based detailed circuit analysis for the fire PRA cables of interest located in the unscreened plant locations. In Task 3, all the cables linked to a component were identified without concern as to the circuit failure mode(s) associated with fire-induced damage to the cables.

9.5.2.1 Step 2.1: Develop Strategy for Circuit Analysis

The first step in conducting circuit analysis is to develop a comprehensive strategy and approach. The following factors should be considered.

1. Determine to what extend the Appendix R of 10 CFR Part 50 circuit analysis data can be used. To make this determination, it is necessary to fully understand the analysis approach used to create the original cable set for each component and compare this to the analysis criteria established for the Fire PRA. Particular attention should be paid to criteria/assumptions in the Appendix R of 10 CFR Part 50 analysis upon which cables have been eliminated as a concern. The assumptions and criteria for these decisions will possibly not fully align with the analysis criteria and cable failure modes (see Step 2.2) to be considered for the Fire PRA. Determine the level of effort necessary to augment or modify the original analysis to conform to the Fire PRA criteria. Experience indicates that a hands-on review of several components is helpful in revealing differences that should be considered when developing a strategy.

2. Determine how the circuit failure analysis results will be documented. The requisite level of detail to be documented should be clearly established, including the rationale for selecting or excluding specific analysis methods. In addition, the specific types of equipment responses to cable failure modes that are to be documented (and possibly ranked) should be determined.

9.5.2.2 Step 2.2: Develop Plant-Specific Rules for Performing Circuit Analysis

Once a strategy and approach for conducting and documenting the detailed circuit analysis has been established, translate the approach into specific “rules” that will be used to govern the specific circuit analysis methodology. The benchmark for these rules is that independent review by different analysts should identify identical circuit/equipment responses. In developing plant-specific circuit analysis rules, consider the following.

1. The following circuit failure modes and their effect on the circuit behavior/component response should be included in the circuit analysis evaluation.

Cable Failure modes:

- Shorts-to-Ground
- Hot Shorts

Effects on Circuit/Component:

- Spurious Operation
- Loss of Power
- Loss of Control
- Erroneous Indication
- Others as appropriate

2. Numerous subcases exist for the cable failure modes identified in Item 1, above. Based on engineering principles, test results, and operating experience, recommendations for disposition of certain cases of interest are provided below.

   - Three-phase proper polarity hot shorts on AC power systems:

     Case 1: Grounded AC system with thermoset-insulated cable. Three-phase proper polarity hot shorts are evaluated as extremely low-probability events for grounded three-phase AC power systems. Based on observed characteristics and behavior of fire-induced cable failures, an estimated upper bound on the probability of occurrence for a three-phase circuit utilizing thermoset-insulated triplex cable located in a typical cable tray or conduit is 5E-8/yr. This bound considers:

     – The likelihood of multiconductor-to-multiconductor hot shorts for thermoset-insulated cable,
     – The likelihood of concurrent and independent phase faults,
     – The likelihood of phase faults of the proper polarity, i.e., phase rotation, and
     – Typical fire ignition and severity frequencies and suppression failure probabilities.

     On this basis, the three-phase proper polarity hot short failure mode is not considered risk-significant in accordance with the defined screening criteria of 1E-7/yr for "potentially high consequence equipment," as defined by Section 2.5.6. It is recommended that this failure mode not be included in the fire PRA cable selection process for grounded three-phase AC circuits involving thermoset-insulated cable.

     Case 2: Ungrounded AC system or thermoplastic-insulated cable. The evaluation of ungrounded systems and thermoplastic-insulated cable is less certain than the evaluation for Case 1 due to the scarcity of data. Nonetheless, with an understanding of the general principles and phenomena involved, it can be reasoned that the failure mode has a low probability, but not as low as that for grounded systems with thermoset cable. On this basis, it cannot be conservatively argued that the failure mode likelihood is below the 1E-7/yr screening criteria established for "potentially high-consequence equipment." Accordingly, for these cases, it is recommended that three-phase proper polarity hot shorts be considered for high consequence equipment in which one or more component failures leads directly to: (a) core damage and containment failure or bypass, or a single component failure; (b) fails an entire critical and essential safety function (e.g., RCS inventory) whose failure would lead directly to core damage, as described in Section 2.5.6.

Case 3: Armored cable or cable in dedicated conduit. Three-phase proper polarity faults are not considered credible for armored power cable or a single triplex cable in a dedicated conduit. The basis for exclusion is that multiconductor-to-multiconductor hot shorts are not possible given the intervening grounded barrier (i.e., the armor or conduit).

- Open Circuits

  Open circuits (a condition that is experienced when an individual conductor within a cable loses electrical continuity) need not be considered as a primary cable failure mode of concern when conducting the detailed circuit failure analysis. However, it is recognized that the effects on a circuit due to shorts-to-ground or hot shorts will likely cause circuit protective device actuation(s) that result in an "effective" open circuit condition (expected circuit state following overcurrent protective action). The effects of this resultant circuit condition should, however, be considered in determining the functional impact on the equipment.

- Compatible polarity multiple hot shorts on ungrounded DC circuits

  Compatible polarity hot shorts for ungrounded DC circuits are evaluated to be a low-likelihood event; however, sufficient data is unavailable to screen out this particular cable failure mode from consideration, based on the thresholds established in Section 2.5.6. Hence, the evaluation of hot shorts should in general consider this particular failure mode. This failure mode encompasses the case in which one of the hot short connections is made through a common connection via a grounded conducting surface (e.g., raceway, enclosure, support, etc.).

- Ground faults on ungrounded AC control circuits

  Ground faults on ungrounded systems should be treated differently than for grounded systems. A single ground fault on an ungrounded system has no immediate functional effect; however, multiple ground faults can energize conductors via backfeed paths through grounded surfaces (tray, conduit, etc.). For ease of analysis when analyzing ungrounded circuits for the effects of a short-to-ground, assume that an existing ground fault from the same power source is present.

- Coincident independent hot shorts involving separate cables

  In general, the analysis of individual components should only consider failures of the specific circuit conductors that are contained within the cable under evaluation. Other conductors making up the circuit, but contained in a separate cable, should be assumed to represent otherwise normal circuit paths (i.e., other cables connected to the cable under evaluation should be assumed to be unaffected by the fire).

  This approach can be implemented using the "hot probe" analysis method. In this approach, the analyst assumes the presence of an energized conductor (the hot probe) capable of energizing the circuit conductor under consideration. The "hot probe" represents a single "source conductor" without reference to its circuit association (i.e., it could be an intracable source or intercable source). The hot probe is postulated to make contact with each individual conductor in the cable (separately or coincidentally).

Experience with the hot probe analysis method for a broad range of circuit types confirms that this method of analysis generally bounds the case of multiple independent coincident hot shorts on separate cables (as applied to the circuit analysis of an individual component). However, for certain unique circuit configurations, this approach might not be inappropriate. Consideration should be given to those (expectedly few) cases where two cables interfacing with a single circuit are exposed to the same fire, and where independent concurrent hot shorts on both cables is necessary to produce an undesirable circuit/component response. Such cable combinations should be flagged and incorporated into the analysis. Appendix I provides an example of such a case. Extending this consideration beyond two-cable combinations is not advised. Determining specific configurations that might warrant a more comprehensive analysis falls within the purview of the electrical analyst.

- Intracable and Intercable Hot Shorts

  For multiconductor cables, energized conductor(s), internal (intracable) or external (intercable) to the multiconductor cable, are considered viable source conductors for hot shorts and can short to individual or multiple conductors within the cable. The likelihood of such failures is addressed under Task 10, Cable Failure Mode Likelihood Analysis.

- Low-Voltage DC (1 VDC-48 VDC) Instrument Signals

  These circuits are typically comprised of instrument signal cables for monitoring, protection systems, or control valve circuits (sensor to I/P converter). Shielded, grounded signal cables are typically used for these applications. Considerations in the analysis of these circuits include:

  – Conductor-to-conductor shorts within an instrument signal cable or intermediate resistance grounds can produce false instrument signals that should be considered when determining equipment responses, including indicators.

  – Many plant protection circuits have logic circuitry that needs multiple input signals in order to actuate (i.e., one out of two taken twice, two out of three, etc.). In these instances, multiple failures on instrument input signal cables (or, in some specific designs, multiple conductors within the same cable) could cause a fire-induced safety signal actuation. These failure modes are addressed qualitatively, as discussed in Volume 1, Chapter 2. The detailed circuit analysis should consider these interfacing circuits only to the extent specified in Chapter 3, Step 2.1.

  – If the cable design can be verified as one that employs a rugged grounded metallic shield (e.g., armor, braid, etc.)[3] then the analysis need only consider the effects of shorting between the conductors within the shield and shorting of the conductors to ground, i.e., the effects of shorts from external sources need not be considered.

[3] This criterion does not include the use of fragile shielding, for example, thin aluminized Mylar. Additionally, if the metal shield is not grounded appropriately, the combined effect of an external source shorting to the shield to which one or more of the internal conductors also shorts should be analyzed.

3. General evaluation approaches for performing detailed circuit failure analyses include:
   - Circuit failure evaluations should be performed with the components in their normal operating state. This demands that the devices making up the circuit be represented appropriately. For example, if relay contacts included as part of the circuit are closed in the normal operating state, the circuit should be analyzed assuming that those contacts are closed. The analysis should be performed using a marked-up circuit schematic that represents the normal operating condition of the circuit under review. If a component state is indeterminate (i.e., varies as a result of normal plant operation, e.g., two motors that are run for alternating periods to even out run time), the worst-case functional state should be selected for analysis.
   - It may be insightful to extend the analysis to consider the possible effect of certain failure modes on the component, if the component's status is changed (or a change is attempted) while the fault is present. One example would be if the operator attempts to close a normally open valve following the onset of cable damage.
   - During the process of identifying equipment responses to cable failure modes, a hot short circuit failure on the appropriate conductor(s) should conservatively be assumed to occur with sufficient electrical contact to impose full voltage on the "target conductor." For example, if a hot short between two conductors can produce a spurious actuation, the short is assumed to occur in manner that permits sufficient energy transfer to cause the spurious actuation. This approach will ensure that a comprehensive population of cables is evaluated.
   - The detailed circuit failure analysis is a deterministic "static" analysis. As such, dynamic aspects of the cable faults are not considered. Each cable fault should be evaluated for the possible equipment response it could elicit. Timing aspects and the ultimate circuit/equipment state are not factored into the criteria. For example, if a hot short between two conductors can produce a spurious opening of a solenoid valve, the analysis should identify "fail open" as an equipment response. How long the hot short will persist before the fault degrades to a ground fault and terminates the spurious operation is not a factor considered by the analysis.
   - Plant-specific design features can preclude certain circuit failures from occurring. For example, the use of grounded, metallic, armored cable or dedicated conduit, shorting switches, or rugged (e.g., braided metal) shielding are considered to preclude external hot shorts from further consideration. Design and construction attributes such as these should be considered in the evaluation. These special conditions should be well documented so the basis for evaluation is readily apparent.
   - Once a cable is analyzed for one fire compartment/scenario situation, the results of its circuit analysis are applicable for the same cable in any other compartment/scenario. Hence, each cable need be analyzed only once to satisfy the objectives of this procedure.
   - Rules should be developed regarding the disposition of unforeseen or undefined component responses that the circuit analysis reveals as a possibility for a given failure mode(s).

9.5.2.3 Step 2.3: Perform Detailed Circuit Failure Analysis

This substep constitutes the critical element of Task 9. Inaccurate analysis of the circuit(s) associated with the cables can ultimately result in erroneous fire risk quantification determinations. Therefore, additional care is prudent in performing the activities described here.

Case 1: Incorporation of Existing Analysis:

If a previous analysis (e.g., Appendix R of 10 CFR Part 50 analysis) is to be incorporated in the calculation package, complete the circuit analysis process as follows.

1. Assemble applicable documentation, drawings, and database information as necessary.

2. Based on the circuit analysis rules established in Step 2.2, above, and with a clear understanding of the generic differences between the Appendix R of 10 CFR Part 50 analysis and fire PRA criteria, identify the possible circuit failure modes and resulting equipment responses to be added or removed from the original analysis. Refer to the applicable sections in Case 2, below, for recommendation on conducting further analysis.

3. Document the changes in accordance with the methods established during the planning phase.

4. Depending on the requested input from the fire modeling analysts, it may only be necessary to document one failure mode. For example, the analysis of a normally closed valve, whose critical function is to remain closed, should generally focus on those cable faults that can cause a spurious opening. To minimize the volume of data to be managed, only the relevant information should be incorporated into the Fire PRA Database.

Case 2: New Circuit Analyses:

If the cable/circuit to be analyzed has no previous analysis, or if the previous analysis is based on substantially different criteria, complete the detailed circuit analysis as follows.

1. Collect and assemble plant drawings, documents, and data for each circuit. Make use of the analysis packages created under Task 3, if available.

2. Following the plant-specific rules established for the circuit analyses, identify the circuit/component responses (e.g., spurious operation, loss of power, loss of control, erroneous indications, etc.) directly associated with the following fire-induced cable failure modes:

   - Shorts to ground, and
   - Hot shorts

   Note that the actual analysis is performed on a conductor-by-conductor basis. The final list of equipment responses for any one cable is a culmination of the responses for the individual conductors in the cable.

3. The analysis is most easily conducted by postulating individual faults on each conductor in the cable (i.e., the "hot probe" method).
   - Identify the equipment response to ground faults on each conductor contained in the cable.
   - Analyze hot shorts using the hot probe method of circuit analysis. In this approach, the analyst assumes the presence of an energized conductor (the hot probe) capable of energizing the circuit conductor under consideration. The hot probe is intended to represent a single source conductor without reference to its circuit association (i.e., it could be an intracable or intercable source). The hot probe is postulated to make contact with each individual conductor in the cable (separately or coincidentally) and the equipment response to the postulated hot short is determined (e.g., spurious operation, etc.). This analysis approach is a practical means of identifying the equipment failure modes for a majority of circuit types.

Appendix I provides a number of circuit analysis examples using the recommended method.

Note: If a more comprehensive method for evaluating a particular cable or specific damage scenario is desired, a more rigorous failure modes and effects criticality analysis can be conducted. One possible method for this type of analysis is discussed at some length in Reference [9.1]. An analysis of this type will help identify any unique dynamic affects that might be present, which may be useful in accessing certain human factors elements of the overall study.

4. In addition to performing the hot probe analysis, determine if the circuit contains any unique attributes that warrant an analysis of coincident hot shorts on separate cables.

5. Document the circuit and component response to each of the separate failure modes postulated in accordance with the methods established during the planning phase (see Step 2.1, above).

9.5.3 Step 3: Generate Equipment Failure Response Reports

1. Enter the information collected in the previous steps into the Fire PRA Database. This information establishes the possible equipment failure modes to the postulated cable faults. In entering the data into the Fire PRA Database, it is important to maintain the established data structure and relationships created for the database system. This will ensure that the essential database sort and query capability is achieved and that data integrity is maintained throughout the iterative process of conducting the evaluation.

2. Once the Fire PRA Database is populated with the equipment failure response data, generate Equipment Failure Response Reports. These reports are a listing by compartment of equipment and associated cables that are affected by fire in the compartment, along with the specific equipment responses that are possible as a result of fire damage to the cables. As discussed in Step 2.3, it might be desirable to track only the equipment responses of concern.

9.6 Uncertainty

The task of analyzing fire PRA cables and documenting the corresponding equipment failure mode is a deterministic process that carries no inherent uncertainty, provided the analysis is accurate in all regards. Uncertainties associated with cable analysis and equipment response will principally flow through as uncertainties associated with the results of Task 10 (circuit failure mode likelihood analysis).

9.6.1 Plant-Specific Circuit Analysis Rules

The first potential source of circuit analysis uncertainty may result from the development of inadequate, ambiguous, or inappropriate plant-specific rules for the analysis of critical circuits, as recommended in Step 2.2. For example, the methodology for analyzing ungrounded AC control circuits might not be complete, resulting in inconsistent application of the criteria by different analysts.

9.6.2 Detailed Circuit Analysis Process

The circuit analysis process itself (Step 2.3) represents a potential source of uncertainty. The uncertainty associated with this substep is that not all possible circuit failure modes will be evaluated. Omissions could result from using incorrect/out-of-date drawings, misunderstandings or applying incorrect interpretations of the circuit analysis rules, and human error, among others.

9.7 References

9.1 *Circuit Analysis – Failure Mode and Likelihood Analysis*, NUREG/CR-6834, USNRC, September 2003.

10
CIRCUIT FAILURE MODE LIKELIHOOD ANALYSIS (TASK 10)

10.1 Purpose

Conducting a fire PRA in accordance with this methodology necessitate an analysis of fire-induced circuit failures beyond that typically conducted during original Fire PRAs. The circuit analysis elements of the project are conducted in three distinct phases:

1. Fire PRA cable selection (Task 3),
2. Detailed circuit failure analysis (Task 9), and
3. Circuit failure mode likelihood analysis (Task 10).

This task provides methods and instructions for conducting the third phase of circuit analysis–failure mode likelihood analysis for fire PRA cables. Task 10 estimates the probability of specific cable failure modes of interest.

10.2 Scope

This task provides approaches and technical considerations for assigning probability estimates to specific cable failure modes associated with fire-induced damage.

This task does not address the implementation of plant-specific quality assurance requirements or configuration control issues that might apply. Nor is it intended to validate the accuracy of plant-specific data extracted from plant drawings, documents, or databases. Each plant should follow appropriate quality assurance, administrative, and configuration control procedures applicable to the work being conducted. The need to validate input *source documents* should be addressed as part of assembling the prerequisite information in Step 1.

10.3 Background Information

10.3.1 General Task Objectives and Approach

Task 10 is intended to provide a probabilistic assessment of the likelihood that a cable will experience one or more specific failure modes (e.g., short-to-ground, intracable conductor-to-conductor short, intercable conductor-to-conductor short, etc.). The documented results of this assessment are entered into the Fire PRA Database, allowing generation of equipment failure reports, including the estimated likelihood of the failure modes of concern.

Estimating the likelihood of occurrence for specific cable failure modes involves three principal steps. Generic instructions for completing these steps are shown in Figure 10-1. An important element of this task is obtaining the necessary cable and configuration data needed to establish correlations to conditions for which cable failure data is available.

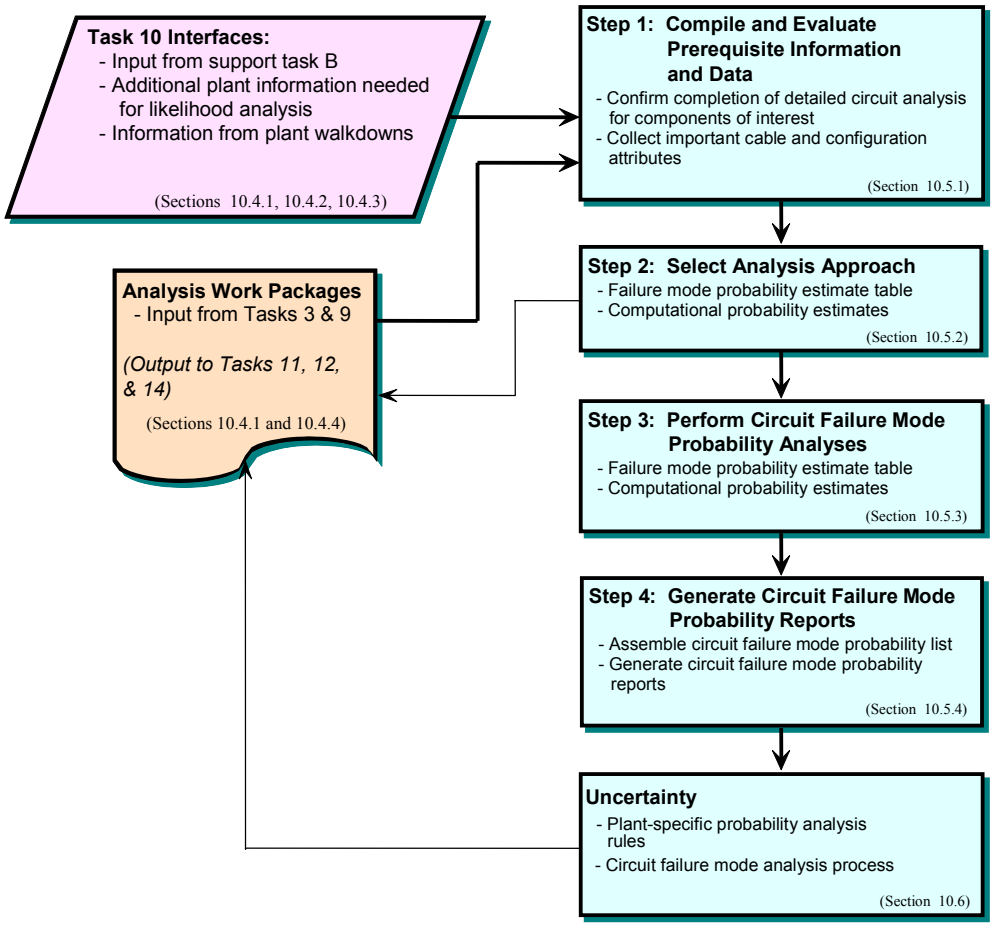

Figure 10-1
Circuit Failure Mode Likelihood Analysis Work Flow

10.3.2 Assumptions

The following assumptions form the basis for this task.

- Requisite cable and configuration attributes are available or can be determined as part of the analysis.
- The equipment is in its normal operating position or condition at the onset of the fire. Where the status of a component is indeterminate or could change as a result of expected plant conditions, the analyst should assume the worst-case initial conditions, consistent with the detailed circuit analysis conducted under Task 9.
- Users of this procedure are knowledgeable and have experience with circuit design and analysis methods and probability estimation techniques.

10.4 Task Interfaces

10.4.1 Input from Other Tasks

10.4.1.1 Fire PRA Cable Selection (Task 3)

This detailed circuit failure likelihood analysis task needs, as a prerequisite, the list of fire PRA cables from Task 3, Fire PRA Cable Selection. The Fire PRA Cable List will be used as the basis for identifying important cable and configuration attributes (e.g., insulation material, raceway type, fire barrier wraps (if any), target and source conductors, etc.) of cables of interest within the compartments under evaluation.

10.4.1.2 Fire PRA Database System (Support Task B)

The Fire PRA Database System (database structure and relationships) is a prerequisite for Task 10. The database system provides a structured framework for maintaining Fire PRA data. The database system is populated with the data and information generated by previously completed tasks, and, in part, will be used to establish the fire PRA equipment and cable routing locations. The data structure and functional relationships established within the database system are specifically designed to provide the necessary sort and query capability to identify fire compartment contents.

10.4.1.3 Detailed Circuit Failure Analysis (Task 9)

The basis for identifying circuit failure modes requiring a probabilistic assessment stems from the detailed analysis of possible failures conducted under Task 9, Detailed Circuit Failure Analysis. This information is essential in establishing a starting point for the probabilistic analysis.

10.4.1.4 Detailed Fire Modeling and Quantification of Fire Risk (Tasks 11 and 14)

Specific scenarios that need circuit failure mode likelihood analysis to refine equipment failure mode probabilities are identified by Task 11, Detailed Fire Modeling and Task 12, Quantification of Fire Risk. In general, the number of circuits requiring a failure mode likelihood analysis should be small compared to the total circuit population in the study.

10.4.2 Additional Plant Information Needed to Support this Task

Plant-Specific Information and Data

- Component elementary circuit diagrams
- Component cable block diagrams
- Component wiring/connection diagrams

- Instrument loop diagrams and block diagrams
- Cable raceway schedules and routing drawings
- Cable and circuit attribute data:
  - Cable insulating material
  - Cable size and number of conductors
  - Number of normally energized conductors (source conductors) and number of conductors susceptible to failure modes of concern (target conductors)
  - Number of normally grounded conductors
  - Power source characteristics
- Configuration attributes:
  - Type of raceway (i.e., ladder tray or conduit)
  - Quantity and type of other cables contained in the raceway

10.4.3 Walkdowns

Plant walkdowns are not considered a fundamental part of this task. Rather, plant walkdowns should be considered on a case-by-case basis as a way of obtaining/confirming necessary information about cables and/or raceway configurations.

10.4.4 Outputs to Other Tasks

The circuit failure mode probability estimates are used principally as reference information for supporting Task 14, Quantification of Fire Risk. The primary objective is to assign probability values for equipment failure modes of concern and then reevaluate CCDP and CDF for acceptability with respect to compartment and/or scenario screening requirements. Equipment will be screened based on the likelihood of a fire-induced circuit failure causing a component failure mode of concern. The circuit failure probability estimates also serve as inputs to the detailed fire scenario quantification process (Task 11). The results of this task might also be used in Task 12 (Post-fire HRA).

10.5 Procedure

Task 10 performs an analysis of the circuits located within unscreened fire compartments/scenarios to assess the likelihood that specific cable failure modes can occur and adversely affect the critical functionality of essential equipment/components. The resulting probability estimates are documented for the various possible cable failure modes induced by fire damage.

This procedure presents two options for calculating circuit failure mode probabilities. Option #1 is based on the probability estimates resulting from industry fire tests [10.1, 10.3]. This option is best applied to cases where the configuration of interest reasonably conforms to or is bounded by

the *Base Case* configurations included in the test program. Option #2 involves a more rigorous accounting of circuit parameters and will take more effort to implement. Although Option 2 can be used for all cases, it is best suited for configurations that substantially deviate from the Base Case configurations.

The publications in Section 10.7 collectively contain the majority of information directly relevant to fire-induced cable failure modes and probability estimates. Analysts are encouraged to become familiar with these documents.

10.5.1 Step 1: Compile and Evaluate Prerequisite Information and Data

This step ensures that prerequisite information and data is available before beginning the failure mode likelihood analyses. Not having the prerequisite information will reduce efficiency and significantly increase the likelihood of rework.

1. Confirm that a detailed circuit failure analysis has been completed and documented for the components of interest.

2. Collect data relevant to important cable and configuration attributes, including:
   - Cable insulation material,
   - Number of conductors in cable,
   - Raceway type or types (if more than one raceway is involved in the scenario),
   - Power source (i.e., CPT, inverter, battery, bus, etc.), and
   - Number of source and target conductors (applicable to Option 2 only).

10.5.2 Step 2: Select Analysis Approach

The first step in conducting the likelihood analysis is to decide which analysis option is best suited for conducting the evaluation.

1. Option #1: Failure Mode Probability Estimate Tables

   Option #1 is well suited for configurations representing the surrogate circuits covered by the testing from which the EPRI/Nuclear Energy Institute (NEI) failure mode probability estimates were derived. For example, the table of probability estimates would appropriately be used for cables that meet the following criteria:

   - The cable is part of the control circuit for a typical component (e.g., non-complex MOVs, SOVs, pumps),
   - The cable serves only a single component and is not directly associated with any other components,
   - The cable configuration is known and can be categorized in one of the table bins (e.g., thermoset multiconductor with CPT intracable short), and

- The principal failure mode of concern is the spurious operation of the component.

2. Option #2: Computational Probability Estimates

   Option #2 is best suited for configurations that deviate significantly from the EPRI/NEI surrogate test circuits. In particular, cases in which the number of source and target conductors is substantially different than the test samples (i.e., two source conductors and two target conductors within a single cable) are good candidates for Option #2. The probability estimate formulas should be considered for use in those cases where:

   - The cable is part of a relatively complex circuit or component,
   - The cable serves or can influence the behavior of multiple components (e.g., safeguards actuation signal, bus shed scheme, etc.),
   - The cable configuration can not easily be categorized in one of the table bins, and
   - The principal failure mode of concern is something other than a spurious operation.

3. Either Option #1 or Option #2 can be reasonably applied for multiconductor cables that contain no more than 15 conductors. The probability estimates are considered reliable for multiconductor cables with up to 15 conductors. Multiconductor cables with more than 15 conductors are considered to carry a substantially higher uncertainty.

10.5.3 Step 3: Perform Circuit Failure Mode Probability Analyses

This step constitutes the critical element of Task 10. The general criteria listed in Step 2 provide direction on which analysis option is best suited for the case under consideration. In general, Option #1 is recommended whenever possible because it can be applied quickly to obtain consistent results. However, the results tend to be more conservative in most cases than those obtained from Option #2.

10.5.3.1 Option #1: Failure Mode Probability Estimate Table

1. Categorize the circuit of interest based on the configuration attributes collected in Step 1.
2. Select the probability estimates for the failure modes of concern from Table 10-1.
3. The following approach is recommended for use and application of Table 10-1 in providing cable failure mode probability estimates.
   - Assume that the values in Table 10-1 are for circuits employing CPTs (except where noted otherwise). If the circuit to be evaluated does not employ a CPT, double the best estimate value and the confidence range values given in the table.
   - If the cable failure mode can occur due to different cable interactions, the probability estimate is taken as the simple sum of both estimates. For example, if a particular thermoset cable failure mode can be induced either by an intracable shorting event (P = 0.30) or by an intercable shorting event (P = 0.03; mid-range of 0.01–0.05), the overall probability of that failure mode is estimated to be 0.33.

Table 10-1
Failure Mode Probability Estimates Given Cable Damage

Cable Type and Raceway	Description of Hot Short	Best Estimate	High Confidence Range
Thermoset Tray	M/C Intra-cable w/CPT M/C Intra-cable w/o CPT 1/C Inter-cable M/C → 1/C Inter-cable M/C → M/C Inter-cable	0.30 0.60 0.20 0.10 0.01 – 0.05	0.10 – 0.50 0.20 – 1.0 0.05 – 0.30 0.05 – 0.20
Thermoset Conduit	M/C Intra-cable w/CPT 1/C Inter-cable M/C → 1/C Inter-cable M/C → M/C Inter-cable	0.075 0.05 0.025 0.005 – 0.01	0.025 – 0.125 0.0125 – 0.075 0.0125 – 0.05
Thermoplastic Tray	M/C Intra-cable 1/C Inter-cable M/C → 1/C Inter-cable M/C → M/C Inter-cable	0.30 0.20 0.10 0.01 – 0.05	0.10 – 0.50 0.05 – 0.30 0.05 – 0.20
Armored Tray	M/C Intra-cable w/CPT	0.075	0.02 – 0.15

M/C: Multi-conductor cable
1/C: Single conductor cable
Intracable: An internally generated hot short. The source conductor is part of the cable of concern
Intercable: An externally generated hot short. The source conductor is from a separate cable

4. When more than one cable can cause the component failure mode of concern, and those cables are within the boundary of influence for the scenario under investigation, the probability estimates associated with all affected cables should be considered when deriving a failure estimate for the component. In general, the probabilities should be combined as an "Exclusive or" function, as shown:

$$P_{\text{Component failure}} = (P_{\text{Failure Cable A}}) + (P_{\text{Failure Cable B}}) - (P_{\text{Failure Cable A}})(P_{\text{Failure Cable B}})$$

5. Document the circuit and component response to each of the separate failure modes postulated in accordance with the methods established during the planning phase.

10.5.3.2 Option #2: Computational Probability Estimates

Application of this calculational method is more complex and is only recommended for cases where Option #1 cannot reasonably be applied. The intent is to give the analyst a means of refining the estimated failure mode probabilities based on the specific characteristics of the cable/circuit under study. For example, the probability of spurious operation will likely be different than the probability of LOC for the same cable, and can thus be distinguished using the calculation method. This is not the case when applying the table values.

This method involves applying *Circuit Failure Mode Probability Estimation Formulas*. The likelihood of occurrence for a specific failure mode ($\mathbf{P}_{FM}$) is estimated by the formula:

$$\mathbf{P}_{FM} = CCF \times \mathbf{P}_{CC,}$$

where

$\mathbf{P}_{FM}$ = the probability that the specific failure mode of interest will occur in a specific circuit given a fire of sufficient intensity to cause cable damage,

$\mathbf{P}_{CC}$ = the probability that a conductor-to-conductor short will occur prior to a short-to-ground or short to a grounded conductor, and

CCF = a factor applied to $\mathbf{P}_{CC}$ that accounts for the relative number of source conductors and target conductors. Target conductors are those conductors of a circuit that, if energized by an electrical source of proper magnitude and voltage, will result in spurious actuation of the circuit, component, or device of concern. Source conductors represent energized conductors that are a potential source of electrical energy.

Note: The following discussions only provide the minimum definition of the failure mode likelihood estimation formulas and their terms. For a complete discussion of the technical basis, detailed explanations, and examples of usage, please refer to Appendix J.

1. Calculate P_{CC} as follows:
   - For cables in trays: $P_{CC} = (TC - GC) / [(TC - GC) + (2 \times GC) + 1]$
   - For cables in conduit[1]: $P_{CC} = (TC - GC) / [(TC - GC) + (2 \times GC) + 3]$

     where

     TC = the total number of conductors in the cable of interest (including spares), and

     GC = the number of grounded (or common) conductors in the cable of interest. The analyst should determine the number of grounded/common conductors based on the circuit configuration (contact positions, etc.) that represent the normal operating state of the component. If this information is unavailable or indeterminate, the worst-case conditions should be assumed.
   - For ungrounded systems (e.g., typical Class 1E nuclear 125 VDC safety systems), use the following formula:

$$\mathbf{P}_{CC} = (TC - GC) / [(TC - GC) + (2 \times GC)],$$

where *GC* represents the number of return – usually negative polarity – conductors in an ungrounded circuit.

[1] Armored and shielded cable should use the equation for conduit. The armor certainly increases the effective ground plane; however, the effect does not appear as significant as one might presume. The mylar banding beneath the armor wrap appears to act as an additional barrier against internal conductors touching the shield.

2. Calculate CCF as follows.
   - For nonarmored cables: $CCF = \{TGC \times [SC + (0.5 / TC)]\} / TC$
   - For armored cables: $CCF = (TGC \times SC) / TC$

   (CCF should be ≤ 1.0. If the calculated value of CCF is greater than 1, then set CCF = 1.)

   Note: In real applications it is highly unlikely that the calculated value of CCF will ever exceed 1. For this to occur, virtually all conductors in the cable would need to be a source conductor or target conductor.

   In the above equations,

   SC = the total number of source conductors in the cable under evaluation,

   TGC = the total number of target conductors in the cable[2], and

   TC = the total number of conductors in the cable, as before.

   Note: The analyst should determine the number of target and source conductors based on the circuit configuration (contact positions, etc.) that represent the normal operating state of the component. If this information is unavailable or indeterminate, the worst-case conditions should be assumed.

3. Calculate $\mathbf{P}_{FM}$ as follows:

   $\mathbf{P}_{FM} = CCF \times \mathbf{P}_{CC}$,

   where CCF and $\mathbf{P}_{CC}$ are determined using the formulas discussed above.

4. When more than one cable can cause the component failure mode of concern, and those cables are within the boundary of influence for the scenario under investigation, the probability estimates associated with all affected cables should be considered in deriving a failure estimate for the component. In general, the probabilities should be combined as an Exclusive or function, as shown:

   $P_{Component\ failure} = (P_{Failure\ Cable\ A}) + (P_{Failure\ Cable\ B}) - (P_{Failure\ Cable\ A})(P_{Failure\ Cable\ B})$

5. Document the circuit and component response to each of the separate failure modes postulated in accordance with the methods established during the planning phase.

10.5.4 Step 4: Generate Circuit Failure Mode Probability Reports

The information collected in the previous steps is entered into the Fire PRA Database, thereby establishing the Circuit Failure Mode Probability List. When entering the data into the Fire PRA Database, it is important to maintain the established data structure and relationships created for

[2] Target conductors are only those cable conductors capable of forcing the component or circuit into the undesired state or condition of interest. For example, the target conductors associated with causing a spurious operation of the component will likely differ from target conductors associated with causing a LOC condition.

the database system. This will ensure that the essential database sort and query capability is achieved and that data integrity is maintained throughout the iterative process of conducting the evaluation.

Once the Fire PRA database is populated with the failure mode probability data, Circuit Failure Mode Probability Reports can be generated automatically. The Reports are a listing by compartment of equipment and associated cables affected by fire in the compartment, along with the probabilities of occurrence for specific failure modes possible as a result of fire damage to the cables.

10.5.4.1 Step 4.1: Assemble Circuit Failure Mode Probability List

The following information is collected and input into the Fire PRA Database. This information, along with other support data entered into the database, is used to establish the Equipment Failure Consequence List.

- Critical cable ID
- Table of the probabilities for the specific fire-induced equipment responses estimated during the analysis
- References (if applicable)
- Comments

10.5.4.2 Step 4.2: Generate Circuit Failure Mode Probability Reports

Using the Fire PRA Database, generate Circuit Failure Mode Probability Reports for all compartments of interest.

10.6 Uncertainty

The estimated failure mode likelihood estimates are uncertain because of the following contributing factors:

- Whether the approach used to analyze the circuits is appropriate for the actual situation and considering the applicability of the test data used;
- Whether the specific rules used to apply the approach are appropriate;
- Whether the actual analysis, use of weighting factors, characterization of circuits, etc., have been performed properly; and
- Whether the underlying generic probabilities used in the task are accurate for the cable/circuit configurations represented.

The process-related uncertainties are best addressed using properly trained analysts and a technical peer review of the work, including the approach selected. However, by comparing the calculated probability of a spurious operation occurring to the results from EPRI cable test data [10.3], the best estimate of a high-confidence range for the estimated probabilities is ±20% of the calculated value.

10.7 References

10.1 *Characterization of Fire-Induced Circuit Faults – Results of Cable Fire Testing*, December 2002. EPRI Report 1003326.

10.2 NUREG/CR-6776, Cable Insulation Resistance Measurements Made During Cable Fire Tests, June 2002.

10.3 *Spurious Actuation of Electrical Circuits Due to Cable Fires: Results of an Expert Elicitation*, May 2002. EPRI Report 1006961.

10.4 *Circuit Analysis - Failure Mode and Likelihood Analysis*, USNRC, NUREG/CR-6834, September 2003.

11
DETAILED FIRE MODELING (TASK 11)

11.1 Purpose

In the preceding tasks, the analyses were organized around compartments, assuming that a fire would have widespread impact within the compartment. In Task 11, for those compartments found to be potentially risk-significant (i.e., unscreened compartments), a detailed analysis approach is provided. As part of the detailed analysis, fire growth and propagation is modeled and possibility of fire suppression before damage to a specific target set is analyzed.

The detailed fire modeling process generally follows a common step structure, but the details of the analyses often vary depending on the specifics of the postulated fire scenario. This chapter provides separate procedures for three general categories of fire scenarios: fires affecting target sets located inside one compartment (discussed in Section 11.5.1); fires affecting the main control room (MCR; Section 11.5.2); and fires affecting target sets located in more than one fire compartment (multicompartment fire analysis; Section 11.5.3).

Task 11 provides final estimates for the frequency of occurrence of fire scenarios involving a specific fire ignition source failing a predefined target set before fire protection succeeds in protecting the target set. This result is combined in the final quantification steps that follow this task, with the CCDP given failure of the target set to estimate the CDF contribution for each fire scenario. The CCDP may include modified human error probabilities based on fire scenario specifics.

11.2 Scope

Detailed fire modeling encompasses an analysis of the physical fire behavior (i.e., fire growth and propagation analysis), equipment damage, fire detection, and fire suppression. The fire scenarios to analyze as part of this detailed analysis task are divided into three categories:

- *General single compartment fire scenarios.* This general category covers fire scenarios damaging target sets located within the same compartment, exclusive of those scenarios within or impacting the MCR. In general, in this category, the fire ignition source is in the same compartment as the target set. The majority of fire scenarios analyzed generally falls into this category. The procedures applicable to the analysis of these fire scenarios are presented in Section 11.5.1.
- *MCR fire scenarios.* This general category covers all fires that occur within the MCR. This category also covers scenarios involving fires in compartments other than the MCR that may force MCR abandonment. The MCR analysis procedures are presented in Section 11.5.2.

- *Multicompartment fire scenarios:* This general category covers all fire scenarios where it is postulated that a fire may spread from one compartment to another and damage target elements in multiple compartments. In this category of scenarios, damaging effects of a fire (e.g., heat) are assumed to spread beyond the compartment of fire origin. The multicompartment fire analysis procedures are presented in Section 11.5.3.

A detailed fire modeling analysis is performed for each fire scenario in each unscreened fire compartment. For many compartments, it may be appropriate to develop several fire scenarios to appropriately represent the range of unscreened fire ignition sources (i.e., scenarios that would not screen out in Task 8) that might contribute to the fire risk. Detailed fire modeling may utilize a range of tools to assess fire growth and damage behavior, and the fire detection and suppression response, for specific fire scenarios.

The ultimate output of Task 11 is a set of fire scenarios, frequency of occurrence of those scenarios, and a list of target sets (in terms of fire PRA components) associated with the scenarios. For scenarios involving the MCR, the possibility of forced abandonment is also noted. Note that a fire scenario represents a specific chain of events starting with ignition of a fire ignition source, propagation of the fire effects to other items, and possibility of damaging a set of items identified as target set before successful fire suppression.

11.3 Background Information

11.3.1 General Task Objectives

Task 11 encompasses the final stages of analysis of the physical fire behaviors associated with fire scenarios in unscreened compartments. A fire scenario in the fire PRA context begins with initiation of a fire and ends with either safe shutdown of the reactor or a core-damage event. Task 11 is concerned only with the analysis of the physical fire scenario; that is, those aspects of the analysis related to the fire ignition, fire growth, propagation, target set damage, and fire detection and suppression.

In the preceding tasks, the analysis is organized around compartments. The fire initiation frequency, CCDP given a fire, and all other parameters assumed that any fire in a compartment would damage all Fire PRA equipment related items in that compartment. In this task, the focus is shifted towards specific fire scenarios within the compartment, and the objective is to estimate their frequencies of occurrence. All fire scenario frequencies can, in general, be represented by the following:

$$\lambda_k = \lambda_{i,k} \cdot SF_k \cdot P_{ns,k}, \qquad \textbf{Equation 11-1}$$

where

λ_k = frequency of fire scenario k

$\lambda_{i,k}$ = fire ignition frequency of the ignition source i associated with fire scenario k

SF_k = severity factor of fire scenario k

$P_{ns,k}$ = non-suppression probability of fire scenario k

These parameters are further defined in this task and the appendices addressing specific aspects of detailed fire modeling.

Prior tasks will likely have screened out many fire compartments as low risk contributors (i.e., in Tasks 5, 8, and 10, Qualitative Screening, Quantitative Screening I, and Quantitative Screening II, respectively). Furthermore, a number of specific fire ignition sources in the unscreened compartments may be screened out as well (accomplished in Task 8, Scoping Fire Modeling). These screening steps will generally reduce the number of possible fire scenarios considered in this task.

11.3.2 General Approach

In Task 11, the analyst identifies one or more fire scenarios for each unscreened fire ignition source located in the unscreened compartments. The overall analysis process applied to each fire scenario is illustrated in Figure 11-1. A summary description of the steps defined in Figure 11-1 is provided below:

- Step 11.1: Characterize Relevant Features of the Compartment:
  - Identify the fire compartment in which the fire scenario would be postulated (for multiroom scenarios, identify any adjacent compartments assumed to be involved in the fire scenario) and characterize compartment features relevant to fire propagation, target damage and operator actions. For multiple compartment fire scenarios, characterize the boundaries that separate all involved compartments.
  - Define general compartment characteristics of importance (e.g., size, construction, ventilation conditions, and adjacency features, if relevant).
  - Identify and characterize detection and suppression features and systems to be credited in the fire suppression scenario analysis.
- Step 11.2: Identify and Characterize Fire Ignition Sources:
  - Identify and characterize fire ignition sources to be analyzed in terms of location within the compartment, type, size, initial intensity, growth behavior, severity/likelihood relationship, etc.
  - Estimate frequency of ignition for the ignition source.
- Step 11.3: Identify and Characterize Target Sets:
  - Identify the target set relevant to each fire ignition source considered in the fire growth and damage analysis. The locations of a target set in relation to the fire ignition source, target types, failure modes, failure criteria, and other relevant information are collected. If target sets will be treated progressively (e.g., progressive failure of one tray after another in a stack of cable trays), identify such progressions and determine which target subsets will be treated as unique subscenarios.
  - Identify secondary combustible fuel elements to be considered in the fire growth and damage analysis (locations relative to fire ignition source, material types, configuration, etc.).

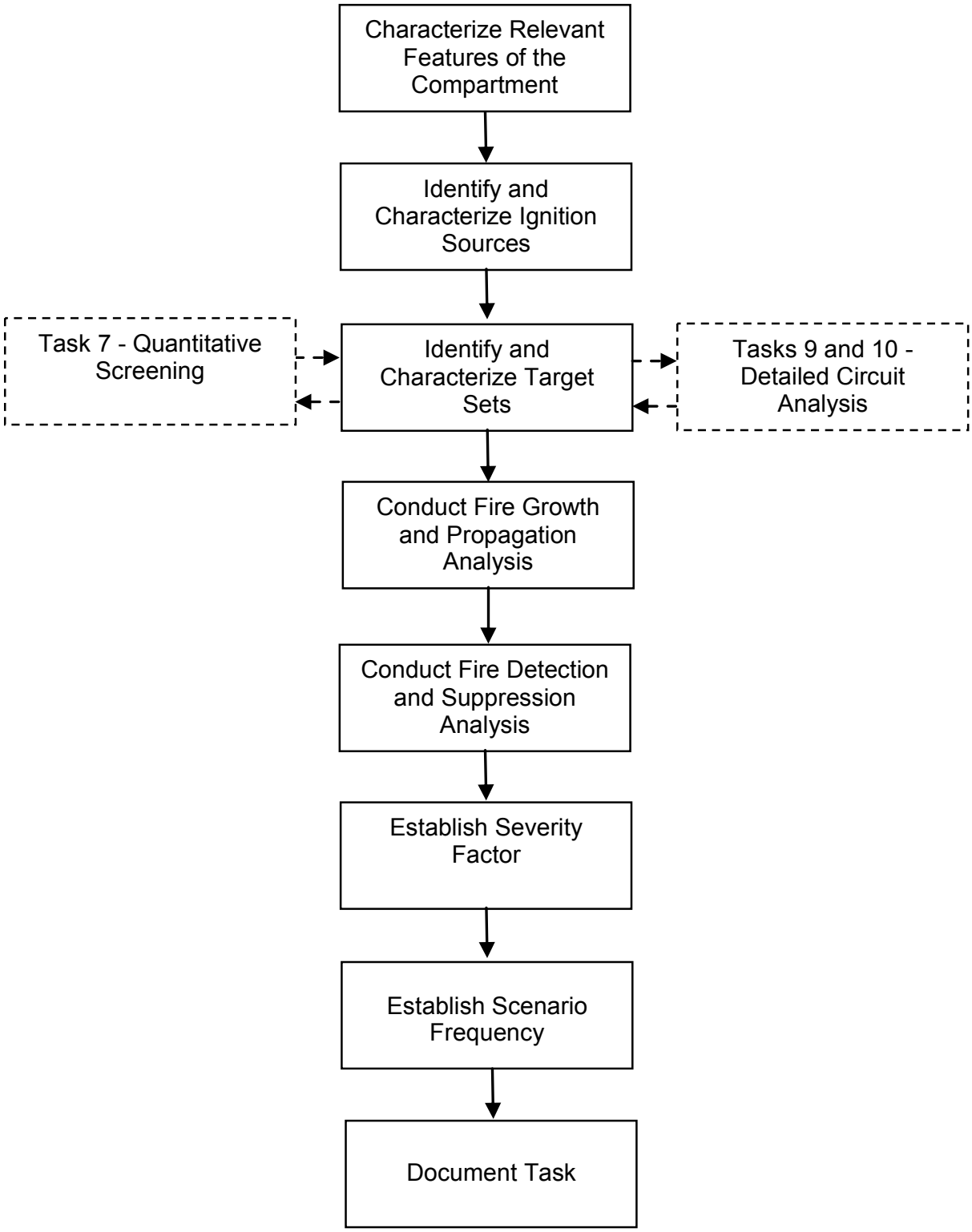

Figure 11-1
General AnalysisFlow Chart for Task 11–Detailed Fire Modeling11.3.4 Fire Growth and Spread Analysis

- Step 11.4: Conduct fire growth and spread analysis:
  - Select the appropriate fire modeling tool(s).
  - Analyze growth behavior of the initial fire source (if applicable).
  - Analyze fire spread (propagation) to secondary combustibles (as applicable).
  - Analyze growth of fire in secondary combustibles (as applicable).
  - Estimate the resulting adverse environmental conditions relevant to the assessment of target set damage (e.g., temperature, heat flux, smoke density).
  - Estimate time to target set damage (probability versus time).
- Step 11.5: Conduct fire detection and suppression analysis:
  - Assess fire detection timing (if applicable, detection triggers manual fire suppression response).
  - Assess timing, reliability, and effectiveness of fixed fire suppression systems (if applicable).
  - Assess manual fire brigade response (if applicable).
  - Estimate probability of fire suppression as a function of time.
  - Calculate conditional nonsuppression probability for each ignition source/target set (or target subset) combination.
- Step 11.6: Establish the Severity Factor:
  - Based on the results of fire growth and spread analysis, and stochastic distributions of various input parameters of the models, the conditional probability of the fire being of the postulated severity level is established.
- Step 11.7: Calculate scenario frequency:
  - Using the fire ignition frequency, nonsuppression probability, and severity factor of the scenario, the overall scenario occurrence frequency can be established. Additional factors (e.g., probability of control room abandonment) may need to be multiplied to obtain final scenario frequency.
- Step 11.8: Document the analysis results:

  In conducting these steps, the analyst may select from a wide range of strategies to minimize the level of effort. Different strategies may be used for different fire scenarios or compartments. The following are a few examples:
  - The worst possible fire severity may be assigned to an ignition source while using a severity factor equal to one. Based on this the worst-case fire propagation, a detection and suppression analysis is conducted and target damage is established. This strategy may be used if the CCDP associated with the target set is small.
  - Detailed circuit analysis may be conducted before the severity factor and probability of nonsuppression are estimated to verify that the postulated failure modes are possible. As shown in Figure 11-1, after target sets are identified, there could be an interaction between that step of this task and Tasks 9 and 10, where detailed circuit analysis is conducted. Under certain conditions or at certain segments of a circuit, some of the postulated failure modes may be impossible. With this strategy, the analyst can reduce the number of target set elements.

– Assuming worst-case circuit failure, the combination of severity factor and probability of nonsuppression may be established first. This strategy may be used when the target set elements are far from the ignition source, which means that the severity factor and nonsuppression probability may lead to a small fire scenario frequency.

11.3.3 Selecting Fire Ignition Sources

Each fire scenario identified in this task begins with fire ignition involving an ignition source. All fire ignition sources that did not screen out in Task 8 should be addressed in this task. The intent is to capture all fire ignition sources with the potential to contribute to fire risk. This should include fire ignition sources involving both fixed and transient fuel packages. Note that the ignition source also establishes the scenario initiation frequency, i.e., $\lambda_{i,k}$.

In some cases, it may be possible to simultaneously capture the contribution of a number of individual fire ignition sources through the analysis of a single fire scenario. This is possible if the fire conditions, including the relative proximity of other combustible fuels and the target set of interest, are essentially identical for all fire ignition sources in the set, and/or are conservatively bounded by the selected representative case.

As an example, consider a fire compartment where the PRA target set of interest is made of cables routed in cable trays. Further assume that a bank (or row) of electrical panels runs directly below the raceways containing the target cables. In this case, it may not be necessary to model each individual electrical panel as a unique physical fire scenario. Rather, it may be possible to represent the entire row of panels with a single physical fire scenario involving one particular panel as the fire ignition source. It would be appropriate to consider whether or not the all panels serve a similar purpose and contain roughly the same type of components. The relative proximity of the secondary fuels and target set cables to each of the panels should also be considered. Even if these factors vary somewhat across the length of the panel bank, it may still be possible to represent the panel bank using a single physical fire scenario whose assumed characteristics conservatively bound those of the individual panels in the set. This approach might also apply if the exact location of target cables in the compartment is unknown, and conservative assumptions regarding their location are made.

The objective of fire growth and spread analysis is to: (1) establish the possibility of the fire involving the ignition source adversely affecting the target set, and (2) estimate the target set damage time. Detailed fire modeling may consider the fire growth behavior within the initiating fire ignition source; that is, the development of fire within the initiating fuel package. The analysis also considers the potential for the spread of fire to other combustible materials and the subsequent fire behavior. As a result, the analyst should characterize both the initial fire source and those combustible materials to which the fire might spread. Note that in the fire modeling process, the intent is to capture the fire damage potential in the absence of fire suppression activities. Fire suppression likelihood is then captured as an explicit, but separate, step in the analysis process.

A wide range of tools is available for the analyst to conduct fire growth and spread analysis. A brief description of these tools is provided below, as in Section 11.5.1. The tools range from simple empirical equations to computerized, numerical, three-dimensional models. For each fire ignition source, or a collection of sources, a range of fire conditions may be postulated to reflect the uncertainty associated with fire growth and damage. In general, transient fuel fires and each unscreened fixed fire source present in the fire compartment should be considered. Note that, in the most general terms, because of the wide variability in the characteristics of ignition sources, a "typical fire cannot be easily defined." Each fire has unique features and behaviors. Fire growth and spread are dependent on a range of scenario-specific features, and on random behaviors that occur during fire growth and spread. As a result, two fires involving the exact same fire ignition source may burn quite differently in the context of, for example, fire growth rate, peak fire intensity, and fire duration. The intent of the fire modeling process is to explicitly capture this behavioral uncertainty in the quantification process.

Care should also be exercised when extrapolating fire conditions from events in the fire event database directly to a specific fire scenario. For example, a fire occurring in one particular location in one particular plant might not represent a significant threat of fire spread or damage because of available separation and the lack of a potential fire spread path. However, that same fire occurring in a different location, or at a different plant, might be capable of spreading to other nearby combustibles and/or causing significant damage to plant components and cables. Furthermore, a fire event may not have led to substantial damage in a particular case because of prompt fire suppression intervention. That same fire, had it burned longer, might have caused substantial damage under the same plant conditions.

11.3.4 Severity Factor

Characterizing the fire ignition source will appropriately capture the uncertainty in fire intensity. That is, the fire ignition source characterization will generally include a recognition and characterization of the fire severity-likelihood relationship.

Any given fire ignition source could lead to fires of varying intensity. The variability in fire intensity for a given source results from both epistemic and aleatory uncertainties. For example, fire intensity will be impacted by factors related to the conditions that led to initiation of the fire (e.g. overheating component versus catastrophic failure of the same component). The current state of knowledge regarding the influence of such factors is imperfect at best. Fires are somewhat chaotic in nature, and, therefore, will exhibit a seemingly random variability in development and intensity regardless of the knowledge state.

In the development of the nominal fire ignition frequency values (i.e., Task 6), some concepts of fire severity have already been incorporated. In particular, the process of quantifying the frequencies presented in Task 6 included screening of reported fire events that did not, and could not, lead to a self-sustained or potentially damaging fire (labeled as non-challenging fires in that task). Furthermore, in Task 8, fire ignition sources that cannot damage any items nearby or cannot spread beyond the ignition source (even given that a self-sustaining fire of conservative intensity is ignited) are screened out. Hence, the postulated fires in Task 11 are self-sustaining, and intervention will be necessary to prevent fire spread to secondary fuels and/or cause fire-induced damage to PRA components and/or cables.

Application of severity factors has been a point of debate in past PRA approaches. This is in part because fire severity-likelihood relationships are heavily influenced by expert judgment. Severity factor approaches introduce a number of potential pitfalls. In particular, extreme care is needed to ensure that dependencies between fire severity factors, fire ignition frequencies, assumed fire conditions, and fire detection/suppression analysis are appropriately captured. The recommended fire ignition source characterization approaches have been explicitly integrated with both the fire frequency and fire detection/suppression analysis tasks to ensure a consistent approach.

The fire modeling activities of this Task 11 will consider a range of fire conditions that might be experienced involving the fire sources. That is, the analysis approach is not based on the analysis of only the most likely fire conditions; rather, it provides explicit treatment of less likely, but potentially more challenging, fires.

Table 11-1 lists the recommended methods for calculating severity factors for the different ignition sources in the frequency model.

11.3.5 Detection and Suppression Analysis

The primary objective of detection and suppression analysis is to estimate the time to fire control. It is assumed that by achieving fire control, the processes that would lead to target set damage slow down significantly so that no further damage would be experienced. The detailed fire-modeling task includes explicit treatment of the detection and suppression process. All fires are eventually suppressed. However, in the fire PRA context, the critical factor is the likelihood that the fire will be suppressed *before* damage to the fire PRA target set occurs.

The detection and suppression analysis considers intervention by fixed fire protection systems and plant personnel, including the manual fire brigade or on-site fire department. Current modeling tools provide only a very limited capability for directly integrating fire detection and suppression. For example, some compartment fire models now allow for the simulation of a fire detector of a sprinkler head as a thermal target, and can, therefore, predict the approximate actuation time of such devices. Closed-form empirical correlations can also estimate detector or sprinkler response times. However, these capabilities address only a limited subset of the overall detection and suppression processes.

In general, the detection and suppression analysis is performed independently from the fire growth and damage modeling applications. However, the assumptions made in the development of fire scenarios can be relevant to the fire detection and suppression analysis. In particular, there are dependencies between screening of fire events in the fire frequency analysis, the fire severity-likelihood relationship, the fire ignition source characteristics assumed in the fire modeling, and the detection-suppression analysis. These dependencies should be explicitly treated.

Appendix P describes detection and suppression analysis methodology. The analyst may chose a different approach, as long as it can properly model the likelihood of target set damage before successful suppression.

Results from the detection and suppression analysis are reflected in the probability of no suppression before target damage. Table 11-1 lists the manual suppression probability curves for the different ignition sources in the frequency model.

Table 11-1
Recommended Severity Factors and Suppression Curves for Ignition Sources in the Frequency Model

ID	Location	Ignition Source	HRR Probability Distribution for Calculation of Severity Factor	Suppression Curve
1	Battery Room	Batteries	Electric motors	Electrical
2	Containment (PWR)	Reactor coolant Pump	Pumps (Electrical)/Oil spills	Containment
3	Containment (PWR)	Transients and hotwork	Transients	Containment
4a	Control Room	Electrical cabinets	Applicable electrical cabinet	Control room
4b	Control Room	Main control board	See Appendix L	See Appendix L
5	Control/Auxiliary/ Reactor Building	Cable fires caused by welding and cutting	Assume 1.0	Welding
6	Control/Auxiliary/ Reactor Building	Transient fires caused by welding and cutting	Transients	Welding
7	Control/Auxiliary/ Reactor Building	Transients	Transients	Transients
8	Diesel Generator Room	Diesel generators	Oil spills	Electrical/Oil
9	Plant-Wide Components	Air compressors	Electrical/Oil spills	Electrical/Oil
10	Plant-Wide Components	Battery chargers	Electrical cabinets	Electrical
11	Plant-Wide Components	Cable fires caused by welding and cutting	Assume 1.0	Welding
12	Plant-Wide Components	Cable run (Self-ignited cable fires)	Assume 1.0	Electrical

Table 11-1
Recommended Severity Factors and Suppression Curves for Ignition Sources in the Frequency Model (Continued)

ID	Location	Ignition Source	HRR Probability Distribution for Calculation of Severity Factor	Suppression Curve
13	Plant-Wide Components	Dryers	Transients	Transients
14	Plant-Wide Components	Electric motors	Electric motors	Electrical
15	Plant-Wide Components	Electrical cabinets	Electrical cabinets	Electrical
16	Plant-Wide Components	High energy arcing faults	Assume 1.0	See Appendix M
17	Plant-Wide Components	Hydrogen Tanks	See Appendix N	Flammable gas
18	Plant-Wide Components	Junction box	Electric motors	Electrical
19	Plant-Wide Components	Miscellaneous hydrogen fires	See Appendix N	Flammable gas
20	Plant-Wide Components	Off-gas/H2 recombiner (BWR)	See Appendix N	Flammable gas
21	Plant-Wide Components	Pumps	Pump (Electrical)/Oil spills	Electrical/Oil
22	Plant-Wide Components	RPS MG sets	Electric motors	Electrical
23a	Plant-Wide Components	Transformers (Oil filled)	Oil spills	Oil
23b	Plant-Wide Components	Transformers (Dry)	Electric motors	Electrical
24	Plant-Wide Components	Transient fires caused by welding and cutting	Transients	Welding
25	Plant-Wide Components	Transients	Transients	Transients
26	Plant-Wide Components	Ventilation subsystems	Electric motors/Oil spills	Electrical/Oil/ Transients
27	Transformer Yard	Transformer - catastrophic	Assume 1.0	Outdoor transformers

Table 11-1
Recommended Severity Factors and Suppression Curves for Ignition Sources in the Frequency Model (Continued)

ID	Location	Ignition Source	HRR Probability Distribution for Calculation of Severity Factor	Suppression Curve
28	Transformer Yard	Transformer - noncatastrophic	Assume 1.0	Outdoor transformers
29	Transformer Yard	Yard transformers (others)	Assume 1.0	Outdoor transformers
30	Turbine Building	Boiler	Oil spills	Oil
31	Turbine Building	Cable fires caused by welding and cutting	Assume 1.0	Welding
32	Turbine Building	Main feedwater pumps	Pump (Electrical)/Oil spills	Electrical/Oil
33	Turbine Building	T/G excitor	See Appendix O	Turbine generator
34	Turbine Building	T/G hydrogen	See Appendix O	Turbine generator
35	Turbine Building	T/G oil	See Appendix O	Turbine generator
36	Turbine Building	Transient fires caused by welding and cutting	Transients	Welding
37	Turbine Building	Transients	Transients	Transients

11.3.6 Assumptions

The following are key assumptions associated with the detailed fire modeling task.

- The analysis is limited to considering a single fire occurring at any given time. The analysis does not consider the possibility of multiple, concurrent fires.
- The analysis does not explicitly try to quantify the risk contribution of seismic-induced fires. Hence, the conditions that may be encountered during a post-earthquake fire are not considered in the discussions provided for fire modeling.
- If a fixed, water-based fire suppression system is available, actuation of that system is assumed to disrupt the process of fire growth and spread sufficient to achieve and maintain effective control of the fire so that additional damage to potential fire PRA targets will not occur.
- If a fixed, gaseous fire suppression system is available, actuation of that system is assumed to disrupt the process of fire growth and spread sufficient to achieve effective control of the fire. However, the duration of control is assumed to be the time period over which it has been demonstrated, by test or analysis, that a sufficient suppressant concentration, per applicable standards, can be maintained. If the suppressant concentration cannot be maintained for the prescribed sufficient time period, it should be assumed that the fire would reflash. In such cases, either a second discharge of the fire suppression system (if available) or intervention by plant personnel would be necessary to regain effective control of the fire.

- Core damage would occur if the control room operators are unable to use the main control board and no actions are taken from outside the control room.
- Control room abandonment would occur when the smoke layer drops below 8′ and its optical density is greater than 1 m^{-1}.

11.3.7 Additional Supporting Documentation

Additional instructions on the definition and characterization of physical fire scenarios is provided in the appendices as identified in Table 11-2.

Table 11-2
Appendices Providing Additional Instructions on Technical Issues in Selecting, Characterizing, and Analyzing Physical Fire Scenarios

Appendix G	Heat release rates
Appendix H	Damage criteria
Appendix L	Main control board fires
Appendix M	High Energy Arcing Faults
Appendix N	Hydrogen fires
Appendix O	Turbine generator fires
Appendix P	Detection and suppression analysis
Appendix Q	Passive fire protection features
Appendix R	Cable fires
Appendix S	Fire propagation to adjacent cabinets
Appendix T	Smoke damage

11.4 Task Interfaces

11.4.1 Input From Other Tasks

The input to this task are a list of unscreened fire compartments (Task 7B, Quantitative Screening II) and fixed ignition sources in their respective locations generated in Task 8, Scoping Fire Modeling. In addition, information on all fire PRA components and cables that have been mapped into each unscreened fire compartment is used in this task. This information is derived during Tasks 2 through 4. This task will also draw on fire compartment characterization information documented in the fire PRA information database from Task 4. This task is also supported by plant walkdowns, as discussed in Support Task A.

In addition, the analyst conducting this task may need to interact with the analysts conducting Task 7 to establish the CCDP associated with a specific target set and with the analysts for Tasks 10 and 11 for assessing the possibility of certain circuit failures.

11.4.2 Additional Plant Information Needed to Support this Task

The detailed fire modeling task utilizes information from a wide range of internal (i.e., plant) and external sources. Much of this information is summarized in Appendices G through T. For example, the analyst may need raceway and equipment layout drawings, various operating procedures, fire protection system description and related procedures, HVAC system descriptions, etc. Focused walkdown of the unscreened compartments is an important part of the information gathering process. Focused walkdowns allow information gathering on site-specific configuration, especially with respect to the physical proximity of fire ignition sources to other combustible materials and to fire PRA components and cables. In addition to focused walkdown and detailed document review, it may be necessary to obtain information about actual fire event experience and fire experiments from external sources.

11.4.3 Walkdowns

This task, as it is noted in the preceding section, typically includes a focused walkdown of the plant. For the single compartment fire analysis, the unscreened compartments should be visited to gather information supporting the processes of selection and description of fire scenarios. The information needed for detailed fire modeling is best obtained through walkdowns of the compartments of interest.

For the MCR fire analysis, a walkdown would also be beneficial. Specifically, it is recommended for the analyst to inspect the backside of the control panels to gain an understanding of the wiring conditions, cable and wiring layout, separation barriers between panel sections, and overall density of the combustibles inside the panels.

The multicompartment fire analysis includes a complete walkdown of all plant locations where fire PRA related components and cables might be present. In that walkdown, the analyst should identify the communication paths between compartments, the condition of the doors, penetration seals, ventilation openings, and any other features that may aid the propagation of hot gases between compartments.

The walkdown process is discussed in Support Task A, Fire PRA Walkdown Procedure.

11.4.4 Outputs to Other Tasks

The primary output of the detailed fire modeling task is a list of fire scenarios for each unscreened compartment; frequency of occurrence of each fire scenario; and a list of PRA components and associated failure modes. These results are carried forward into the final stages of quantitative screening (i.e., Tasks 13 and 15) and into the final risk quantification and uncertainty analysis task steps (i.e., Tasks 17 and 18).

In the course of conducting Task 11 steps, as shown in Figure 11-1, it may become necessary to interact with the detailed circuit analysis tasks (i.e., Tasks 9 and 10) and with the quantitative screening task (i.e., Task 7).

11.5 Procedure

Separate procedures are described below for the three general categories of fire scenarios:

1. Fires affecting target sets located inside one compartments,
2. Fires affecting the MCR,
3. Fires affecting target sets located in more than one fire compartment (multicompartment fire analysis).

11.5.1 Single Compartment Fire Scenarios

The procedure described in this section applies to the analysis of those physical fire scenarios that impact target sets located within a single compartment, exclusive of those fire scenarios impacting the MCR. Note that the steps applied to these types of scenarios are distinguished from others by an 'a' following the step identification number. Corresponding tasks associated with fire scenarios impacting the MCR and fire scenarios impacting multiple fire compartments will be designated with a trailing 'b' or 'c', respectively (see Section 11.5.2 and 11.5.3).
The following steps and substeps are recommended for single compartment fire analysis.

Step 1.a: Identify and Characterize Compartment

Step 2.a: Identify and Characterize Fire Detection and Suppression Features and Systems

Step 3.a: Characterize Fire Ignition Sources

Step 4.a: Identify Secondary Combustibles

Step 5.a: Identify and Characterize Target Sets

Step 6.a: Define the Fire Scenarios to be Analyzed

Step 7.a: Conduct Fire Growth and Propagation Analysis

- Step 7.a.1: Selection of Fire Modeling Tools
- Step 7.a.2: Analyze growth behavior of the initial fire source (if applicable).
- Step 7.a.3: Analyze fire spread to secondary combustibles (as applicable).
- Step 7.a.4: Analyze growth of fire in secondary combustibles (as applicable).
- Step 7.a.5: Estimate the resulting adverse environmental conditions
- Step 7.a.6: Estimate time to target set damage

Step 8.a: Conduct fire detection and suppression analysis

- Step 8.a.1: Assess fire detection timing
- Step 8.a.2: Assess timing, reliability and effectiveness of fixed fire suppression systems
- Step 8.a.3: Assess manual fire brigade response
- Step 8.a.4: Estimate probability of fire suppression as a function of time

Step 9.a: Calculate conditional non-suppression probability and severity factor

Step 10.a: Calculate scenario frequency

Step 11:a: Document analysis results

Each step is discussed below in some detail. Note that in the conduct of the fire analysis, various analysis tasks may be performed during a single consolidated modeling activity. For example, Steps 7.a.2 through 7.a.6 are often included within the scope of a single consolidated compartment fire model. In such cases, separate analyses are not performed to address each individual step, as outlined below. However, the objectives established in these individual tasks should still be met.

11.5.1.1 Step 1.a: Identify and Characterize Compartment

The purpose of this step is to understand the specific features and related fire protection systems in the compartment of interest. To ensure consistency across all tasks, the compartments in which the fire is assumed to occur should be identified consistent with the fire PRA Plant Partitioning under Task 1.

At this point, the following general information about each compartment may be collected:

- Compartment height, length, and width;
- Wall construction type and thickness;
- General information about compartment ventilation (e.g., forced ventilation or open doorways);
- Ceiling soffit or beam pocket features relevant to fire environment development (e.g., hot gas layer build up, ceiling jet behaviors, and detection/suppression response).

11.5.1.2 Step 2.a: Identify and Characterize Fire Detection and Suppression Features and Systems

In this step, the analyst characterizes the detection and suppression features and systems that will be credited when analyzing the fire scenarios. This may include any and all means of detection and suppression available for the compartment. Specific factors that should be documented depend to some extent on the type of feature or system being credited.

- For *fixed fire detection systems*, the type of fire detector should be identified (e.g., ionization smoke, photoelectric smoke, threshold heat detector, rate of rise heat detector, flame or flash detector, incipient fire detection system, Protectowire®, or other similar features). Where appropriate (e.g., for heat detectors), a time constant or specific actuation set point may be established based on the characteristics of the specific device installed. Any relevant installation features should also be described (e.g., spacing, extent of coverage, mounting of detectors on a pendant-type structure below ceiling level, and features like beam pocketing and obstructions that may impact actuation) as related to the specific fire ignition source scenario being analyzed. The location where detection signals are sent should also be identified. Deviations between the as-installed system and the applicable code of record should be noted.

- For *fixed water-based fire suppression systems*, the type of sprinkler or spray heads used should be identified (e.g., open head deluge, closed fusible link sprinklers, fast action sprinklers, direct spray nozzles, etc). For fusible link sprinklers, the actuation set point and time constant should be established. Any specific requirements for system actuation should also be described (e.g., a preaction system that requires actuation of a cross-zoned fire detection system). Any relevant installation features should also be described (e.g., spacing, extent of coverage, use of drop pendants that place sprinkler heads substantially below ceiling level, and features like beam pocketing and obstructions that may impact actuation or effectiveness) as related to the specific fire ignition source scenario being analyzed. Deviations between the as-installed system and the applicable code of record should be noted.
- For *fixed gaseous fire suppression systems*, identify the type of fire extinguishing agent applied. The available quantity of suppressant should be determined. The design concentration of the suppressant should be specified. The logical/conditional requirements that initiate actuation of the system should be established and described. If the system has sufficient inventory for multiple discharges, the number and plant-specific basis for initiating a second (or third) discharge of the system should be described. For gaseous systems, the ability to maintain an adequate concentration of suppressant for an adequate soak period is necessary to ensure extinction of the fire. The available suppressant confinement time at the design concentration should be determined (either by test or analysis consistent with general system design practice).
- For the analysis of *manual detection* by plant personnel, the analyst should establish the extent to which personnel enter or occupy the compartment. For example, the space may be continuously manned; represent a regular passage route for personnel moving through the plant; occasionally occupied; subject to periodic security sweeps; or subject to a continuous or roving fire watch. These features will be used to determine the likelihood of manual fire detection.
- The *on-site manual fire brigade or fire department* can be credited for fire suppression in virtually all areas of the plant. However, the assessment of brigade response should consider accessibility of the compartment to fire fighters. Hence, fire brigade accessibility should be characterized for each compartment. The characterization may be defined by such features of a compartment as distance from main parts of the plant, radiation level, contamination level, and special access means (e.g., ladders and scaffolding). A review of plant training records may be appropriate to determine what the anticipated response time is to the compartment of interest. In this regard, the critical factor is the time necessary to initiate effective firefighting activities, not simply the response time for the first member of the fire brigade. Hence, the assessment should also consider plant practices regarding brigade response. For example, the plant may adhere to “two-in, two-out” response procedure. It is also appropriate to establish that proper fire fighting equipment will be available to support the brigade upon arrival at the compartment.

As evident from this list, the analyst should understand general fire detection and suppression strategies for the compartment. For the most part, fire suppression strategies in nuclear power plants include the use of fixed systems (manual or automatic) and the fire brigade. Fixed gaseous suppression systems require the rooms to be unmanned and closed for a specific period of time after discharge for effectiveness and life-safety reasons. Manually actuated gaseous systems may

require fire brigade members to perform a visual inspection of the room before actuating the system. Answers to the following questions may help the analyst determine which fire protection feature can be credited at a specific point in time.

1. What happens immediately after detection? Usually the control room dispatches an operator to the room for verification of the alarm signal. The operator then reports back to the Control Room and the fire brigade is dispatched.

2. Will the fire brigade start manual suppression activities immediately upon arrival or actuate a manual fixed suppression system? This question may not have a single answer, since it may depend on the nature of the fire. Small fires are likely to be suppressed immediately with portable fire extinguishers.

3. Who authorizes the actuation of fixed suppression systems? How long does it take to obtain authorization? Will the fire brigade initiate suppression activities while authorization is obtained? These questions apply, for the most part, to rooms equipped with CO_2 systems where life safety in continuously manned adjacent rooms is a concern.

In addition, if a fixed, water-based suppression system is provided for the compartment or a water hose reel is available for the firefighters, it is appropriate to investigate the following so that when defining scenarios, a complete chain of events is considered.

- Verify that potentially vulnerable components are shielded from fire suppression water sprays. Where water from fire suppression efforts will likely enter a potentially vulnerable component (e.g., a panel with unsealed penetrations or an unshielded electrical motor), it is appropriate to include that component in the fire scenario damage set.
- Verify that adequate drainage has been provided to support firefighting activities and to prevent flooding of components.
- Verify that penetrations through the floor of a fire compartment under analysis are sealed to prevent water from firefighting activities from migrating into the compartment below. The presence of unsealed penetrations may indicate the need for analysis of a corresponding multiroom fire scenario.

11.5.1.3 Step 3.a: Characterize Fire Ignition Sources

This step characterizes the ignition sources of the compartment. The final product of this step is a list of ignition sources, their relevant characteristics (e.g., type, quantity, dimensions, and heat release rate profile), and fire ignition frequencies associated with each source.

List the ignition sources in the compartment and highlight their location on equipment layout drawings. Do not include ignition sources screened in Task 8. Transient combustibles should also be identified in this step. Areas of the compartment where transient combustibles could be found may be marked on the layout drawings. It is important to identify the characteristics of each ignition source in terms of such parameters as type, quantity, dimensions, location, normal operating temperature, etc. It is also important to fire propagation analysis to establish the heat release rate profile of the ignition source. Appendix G provides the heat release rates of several combustibles and equipment items typically found in a nuclear power plant.

In some cases, it may be more efficient to identify the target sets (Step 4.a, below) than the ignition sources. This is especially true for compartments with a small number of targets and a considerably higher number of ignition sources. Turbine Buildings are an example of such compartments.

Represent fires in any one of a bank of electrical panels by modeling fires involving one specific electrical panel in the bank. In this example, it would be appropriate to consider the relative proximity of the targets to the selected panel, compared to their proximity to the other panels in the bank. Similarly, it would be appropriate to ensure that the potential for fire spread from the selected panel to secondary combustibles (e.g., overhead raceways) bounds the potential fire spread should the fire occur in another panel.

The ignition source characterization will vary somewhat, depending on the nature of the ignition source.

- Oil or liquid spill fires are characterized by the material spilled, the quantity of material, and the surface area of the spill. The heat release rate and duration of the fire follow directly based on these factors.
- Transient fuel materials are characterized by the type and quantity of material, its assumed location in the room, and the assumed peak fire intensity.
- General fires involving electrical panels are characterized by the peak fire intensity anticipated and the anticipated burn duration. In some cases (e.g., the main control board), the assumed extent of potential fire spread may also be a limiting factor.
- Fire ignition source scenarios intended to capture energetic electrical faults in electrical components are characterized by an initial radius of mechanical and/or thermal damage, the potential breaching of containing structures (e.g., a panel), the ignition of combustibles within a predefined radius of the failed component, and the intensity of the ensuing fire (which is assumed to be fully developed with no period of fire growth within the fire ignition source itself).
- Oil or flammable liquid spray fires (i.e., fires resulting from a leak in a pressurized flammable liquid line) are characterized by the leak rate of the flammable liquid and the length of the fuel jet. The total inventory of flammable liquid in the system may also be a limiting factor.

As part of this step, the frequency of fire ignition is estimated. Frequency of fire occurrence involving the specific ignition source can be estimated using the approach recommended in Task 6.

11.5.1.4 Step 4.a: Identify Secondary Combustibles

Secondary combustible fuel elements that may become involved in the fire should be identified. Secondary fuels may include, for example, overhead raceways, cable air-drops, stored materials, electrical panels, construction materials, etc. The information provided should describe the relative proximity of the secondary combustibles to the fire ignition source and a general configuration of the secondary combustible. For example, if cables are present as a secondary

fuel, it is appropriate to identify the following features of those cables: vertical cable trays vs. horizontal cable trays; existence of vertical air drops proximate to the fire ignition source; raceway stacking arrangements; raceway fill levels; total quantity of combustible materials present; cable type if known; distance (horizontal and/or vertical) between the cables; and the ignition source, etc.

The identification of secondary combustibles should include cascading fire spread. For example, in many cases, the fire in the initial ignition source fuel package may ignite one package of secondary fuels, which in turn ignites other secondary fuel packages, and so on. A common case would be a panel fire that ignites the first of a stack of trays overhead. The fire involving the combination of the panel and first tray may then ignite the second tray in the stack. The fire may then progress to additional fuel packages.

11.5.1.5 Step 5.a: Identify and Characterize Target Sets

This step identifies the various target sets that exist within a compartment for which fire damage scenarios will be postulated. Each target set should be a subset of the Fire PRA components and circuits (i.e., cables) present in the compartment. The Fire PRA components and circuits of the compartment should be reviewed and their locations identified on the equipment layout drawings. The raceways where Fire PRA component-related circuits (i.e., power, control and instrumentation cables) are located should be specifically identified in relation to the ignition sources and secondary combustibles in the compartment.

Select subgroups of Fire PRA components and related raceways may, based on conservative judgment, be exposed to a fire from a specific ignition source and secondary combustible combinations. The location of each subgroup is important. All members of each subgroup should be located within a well-defined volume above the ignition source. All Fire PRA component-related items within the volume should be members of the subgroup. There should be no Fire PRA component-related items between the volume and postulated ignition sources.

The subgroups are target sets within the compartment that a fire may cause risk significant damage. Identify these subgroups (target sets) on the equipment layout drawings to facilitate the fire scenario identification process discussed in later steps of this task.

Some recommendations statements about identifying the target sets within a compartment are provided below:

1. The subgroups of fire PRA components can be identified by examining the associated CCDP. Those subgroups with very small CCDP may be ignored as insignificant contributors to fire risk.

2. Interactions with the PRA and fire-modeling analyst should indicate if further work is necessary in describing the target sets. For example, in some cases, it is sufficient to know the location of a cable at a stack level. Other scenarios may require knowledge of cable location in a specific tray within a stack.

3. Interactions with the circuit analyst may be helpful in determining the importance of spurious actuations in determining the target sets. That is, target sets may not consist only of direct fire damage to equipment from more than one division. The analyst should determine if damage to cables from one division could cause spurious actuations that would render the other division unavailable. For example, a Division A valve may be located in a Division B flow path. If the Division A valve spuriously actuates, the flow path for Division B is unavailable.
4. Interactions with the circuit analysts may help in determining failure modes due to fire. That is, fire damage to cables may not mean failure of the equipment in the worst position, depending on the electrical circuit design and the progression of equipment damaged by the fire.

In the event that the physical locations of the targets within a compartment are poorly known, it is appropriate to justify the locations assumed in the analysis.

1. In some compartments, it may be impossible to verify, with reasonable confidence, whether or not the cables associated with a particular item on the Fire PRA Component List are located in the compartment of interest. In such cases, it is appropriate to assume that such cables are subject to fire-induced damage given fires in the compartment. The scenario description should also include the bases for assuming that the specific circuits (i.e., cables) are located in the compartment.
2. In some cases, the presence of a cable (or cables) in a compartment may be assumed, but not verified. In such cases, it is appropriate to make this distinction, and to explain the rational for assigning an assumed location to that cable.
3. In some cases, it may be known that a particular cable passes through a compartment, but its specific location in the room may be unknown. In such cases, it is appropriate to make this distinction and explain the rational for assigning an assumed location for that cable.

In addition to identifying the items that comprise the target sets and their locations, it is necessary to characterize the failure processes of each element. The characteristics of interest are the failure mechanism of interest (e.g., thermal damage, smoke, water spray, etc.) and the damage threshold or criteria (e.g., a failure temperature, etc.). In lieu of characterizing each individual target element, the analyst may select a single set of target characteristics to represent all elements of the target set. In this case, the selected characteristics should be based on the target element most vulnerable to failure given a particular failure mechanism.

11.5.1.6 Step 6.a: Define the Fire Scenarios to be Analyzed

The objective of this step is to define the fire scenarios that will be analyzed in this task, define a scenario the analyst should start with, an ignition source, postulate potential growth and propagation to other combustibles, and damage to the closest target set that may be exposed to the specific fire. The process should be repeated for the next closest target set until all relevant target sets are exhausted for the same ignition source. Another ignition source is then selected and the process repeated until all target sets and ignition sources are considered. This process should yield all potential fire scenarios that may damage the various target sets identified in the preceding steps.

As part of the ignition source selection process, it may be necessary to identify the specific location or point within the ignition source fuel package assumed as the point of fire origin. For example, in the case of a bus-bar, ignition may occur at any one point along the length of the bus-bar. The ignition frequency may have to be adjusted to account for the specific ignition location.

If characterization of the fire ignition source will depends on specific features associated with the assumed fire ignition mechanism, these features should also be identified. For example, self-ignited cable fire or overheating component, for example, would generally involve fires that begin relatively small and grow over some period of time. In contrast, catastrophic failure of a high-energy electrical component, ignition of a flammable liquid pool or spray fire, or ignition of a combustible gas would indicate a fire that would almost instantaneously become a fully developed fire.

11.5.1.7 Step 7.a: Conduct Fire Growth and Propagation Analysis:

As a first step, the analyst should determine if the compartment effects are relevant. That is, the analyst should determine if the fire modeling analysis could be completed using simplified correlations that do not explicitly account for compartment feedback effects on the fire environment. Such feedback effects may result from impingement of a flame zone on compartment boundaries, development of a thermally significant hot gas layer, and potential concerns related to build up of a smoke layer (e.g., depth and density). If the compartment feedback effects are determined to be important, the more appropriate modeling approach is a consolidated compartment fire model.

In general, if all the items in the target set are located in the flame zone, directly in the fire plume or ceiling jet, or if the dominant mode of target exposure is direct flame-to-target thermal irradiation, full consideration of the compartment effects may not be necessary. Note that considering some aspects of the compartment geometry may still be necessary. For example, calculating a ceiling jet requires knowledge of the ceiling height. Compartment characteristics should be gathered commensurate with the needs of the fire modeling. If a determination is made that the use of simplified modeling tools is appropriate (e.g., hand calculations using closed-form solutions), it is appropriate to document the basis for this determination.

On the other hand, a full compartment definition is necessary if the scenario involves the need to consider hot gas layer temperatures, hot gas layer depth, wall temperatures (or wall losses), heat exchanges between different surfaces, and both natural and mechanical ventilation effects on fire-generated conditions. In such cases, the compartment should be defined with a more complete level of detail, again, commensurate with the model applied to the analysis.

11.5.1.7.1 Step 7.a.1: Selection of Fire Modeling Tools

The analyst should determine which fire modeling tool(s) will be applied in the analysis of the fire growth and spread for the physical fire scenario. There are many fire modeling tools that might be applied and each has its own distinct advantages, disadvantages, and limitations. This procedure is not intended to serve as a reference for the selection and/or evaluation of fire modeling tools. Nor is it the intent of this procedure to either exclude or endorse any one or more particular fire modeling tools. It is the responsibility of the analyst to select tools that are appropriate to the intended application.

The selection of fire modeling tools should consider the specific application being supported. For example, if the fire scenario involves the potential for spread to secondary combustibles, the tool should provide a mechanism for assessing the timing of secondary ignitions, the subsequent development of the fire in the secondary fuel package or packages (e.g., subsequent spread of the fire to additional secondary fuels), and the impact of the composite fire (involving both the fire ignition source and ignited secondary combustibles) on the exposure environment relative to the target set.

Specific fire modeling tools could include the following:

- Rules of thumb. Rules of thumb represent trade or field practices applied in a course evaluation of an engineering situation. In general, rules of thumb are undocumented and lack a strong technical basis. Hence, they are inappropriate for application in a Fire PRA. In Fire PRA, the applied fire modeling tools, assumptions, and data should be traceable to one or more published documents.
- Closed-form empirical correlations. Fire protection texts and handbooks provide a range of closed-form empirical correlations that may be applicable to the analysis of relatively simplistic fire growth and spread scenarios. For example, such correlations can be applied to the analysis of flame zone, radiant heat flux levels, plume temperature, ceiling jet temperature, detector response timing, and even hot gas layer response behaviors. However, such tools will typically exceed their limits of validity in more complex fire configurations. For example, if secondary combustible fuel packages ignite, or if room feedback effects become important, the simple closed form empirical correlations will typically fail.
- Zone-type compartment fire models. A range of zone-type compartment fire models are available both in the public and private domain. Zone models vary in their capabilities and limitations, but typically have common features and capabilities in many regards. Zone models are generally applicable to relatively simple fire/compartment configurations. They cannot, for example, explicitly address the impact of an L-shaped room versus a rectilinear room on fire development. Some models may also have difficulty dealing with multiple fire sources. The ability to predict target response (e.g., secondary ignitions and/or the response of a target) also varies. In general, zone models are commonly applied to the analysis of NPP fire scenarios in Fire PRAs.
- CFD models: A number of CFD models exist in both the public and private domain. CFD models represent the current pinnacle of fire model development efforts worldwide. They provide detailed information on fire conditions that includes spatial distributions of environmental parameters and effects. Currently, most CFD models provide only crude tools for the modeling of the fire itself. For example, the user needs specify the rate of release of fire products in many CFD models (e.g., heat, smoke, products of combustion, etc.). CFD models also demand a high level of technical expertise.

11.5.1.7.2 Step 7.a.2: Analyze Growth Behavior of the Initial Fire Source (If Applicable)

This step is applicable where the initial fire ignition source is assumed to follow a fire growth profile based on a fire modeling application. In many cases, the fire ignition source will either be assumed to follow a prescribed growth profile, or to display constant fire intensity. In such cases, this step is not necessary.

If the fire growth profile is based on fire modeling results, the analysis is performed using the selected fire modeling tool. The results should be documented and reviewed for consistency with anticipated behavior. Note that the analysis should assess the impact of parameter uncertainty on the model predictions. Sensitivity studies to assess the importance of the critical modeling parameters may also be appropriate.

11.5.1.7.3 Step 7.a.3: Analyze Fire Spread to Secondary Combustibles (As Applicable)

It is important that the fire modeling analysis appropriately consider that secondary combustible fuels elements might ignite given a fire in the assumed fire ignition source. In some cases, it may be determined that a fire ignition source cannot ignite secondary combustibles. However, such a determination should include consideration of the uncertainty associated with the intensity of the fire ignition source. For example, in many cases, secondary fuels may ignite only if the intensity of the fire ignition source is relatively high. This factor will be explicitly accounted for in assessment of the severity/likelihood relationship for the fire ignition source.

In cases where, despite conservative assessments of fire severity, the ignition source is determined not to ignite secondary combustibles, it may also be appropriate to explore the margin between the worst-case fire conditions modeled in the analysis and the fire conditions that would lead to fire spread. This would, for example, be appropriate in the context of defining a limiting fire scenario under NFPA 805. If the margin between these cases is not large, some additional consideration should be given to the potential that the limiting fire conditions might be reached in practice (e.g., it may be appropriate to extend the severity/likelihood relationship to explicitly encompass the limiting fire conditions).

In this step, the analyst quantifies the fire ignition and spread properties associated with secondary combustible fuel elements. The analysis also identifies physical features that could substantially alter the fire spread behavior.

- In the case of cables, it is appropriate to establish piloted and nonpiloted ignition thresholds. If the fire model being applied does not explicitly address cable fire spread, an approach for estimating fire spread rates should also be considered (see Appendix R for specific examples).
- Passive fire protection features that might prevent ignition of secondary combustible elements or limit flame propagation should be documented. Examples are fire breaks (e.g., spatial separation or a fire barrier installed within open raceways), solid-bottom trays or tray bottoms, tray covers, mastic coatings, and fire wraps. Other passive plant features that could prevent ignition and/or reduce the likelihood of fire spread could include HVAC ducts, internal compartment partitions, and radiant barriers or heat shields.
- In the case of electrical panels, the panel ventilation configuration and the latching configuration of the doors is important. If the panel contains open vents, either at the top or bottom of the pane, or if penetrations into the top or sides of the panel are not fire-sealed, fires can be assumed to be capable of spreading out of the panel to secondary combustibles. However, for unvented cabinets, fire spread may be less likely. Fire spread out of the panel may still occur, unless the panel doors are attached and anchored at multiple points. Simple twist-handle style top-and-bottom door latches are not sufficient to contain a fire within a panel. Substantial warping of the door face may occur due to the heat of the fire. This can

allow gaps to open in an otherwise unvented panel. In contrast, fire spread is not considered likely given a weather-tight or waterproof cabinet construction where multiple mechanical fasteners secure panel access plates and where all penetrations into the panel are sealed.

- Flammable liquids stored in listed flammable liquid storage lockers are considered to be properly protected and can be assumed to be unaffected by an exposing fire. While such storage lockers may be relevant to the seismic-fire interaction analysis if not anchored, they are not considered in the development of fire scenarios in the general fire PRA risk quantification analysis.

11.5.1.7.4 Step 7.a.4: Analyze Growth of Fire in Secondary Combustibles (As Applicable)

It is important that the fire growth and propagation analysis consider the potential for cascading fire growth and spread. That is, given the ignition of one secondary fuel package, the effects of this secondary fire, in combination with the fire ignition source, on subsequent fire growth and spread should be examined. The ignition of additional combustible fuel packages as a result of the combined fire should also be considered.

11.5.1.7.5 Step 7.a.5: Estimate the Resulting Adverse Environmental Conditions

In this step, the analyst estimates the environmental conditions created by the composite fire scenario (the fire ignition source plus any and all ignited secondary combustible fuel packages). The fire environmental effect should be predicted consistent with the failure modes and thresholds of interest established in Step 5.a. Typically, the hot gas layer temperature profile, smoke density (if needed for assessing scenario impact on plant personnel), and room ambient temperature are evaluated.

11.5.1.7.6 Step 7.a.6: Estimate Time to Target Set Damage

In this substep, given the fire and environmental conditions estimated in the preceding substeps, the time-to-target set damage is estimated. The time-to-target set damage is defined as the time between fire ignition and damage to the last element of the target set. The fire damage analysis should consider, as a minimum, damage due to thermal exposures. In particular, the damage analysis should consider both temperature exposure (e.g., exposure of targets in the flame zone, fire plume, ceiling jet, and hot gas layer) and radiant heating exposures (e.g., radiant heating from direct exchange with the flame zone, or radiant heating from a hot gas layer to a target below the upper/lower layer interface level.

- Electrical cable damage is typically based on the exposure temperature (i.e., the temperature of the environment surrounding the cables), the exposure heat flux, or the temperature of the cable itself. Current understanding suggests that the temperature of the cable insulation material drives the failure behavior. That is, once the insulation reaches a temperature threshold, failure will occur. Hence, a direct analysis of the cable thermal response may provide the most accurate estimates of damage timing. However, in practice, the environmental exposure temperature and/or the incident heat flux may be used as surrogates for the insulation temperature. Using the environmental exposure temperature directly as an indicator of damage (i.e., if the environment reaches the damage threshold, damage is

assumed to occur immediately) is considered a conservative practice. Considering the time delay associated with the thermal response of the cable can reduce and/or eliminate this conservatism. For example, if the exposure temperature is equal to the assumed damage threshold for the cable, a prolonged period may pass before failure occurs. If the exposure temperature is as little as 25°C above the threshold, failure may occur in a matter of minutes. At very high exposure temperature or heat flux levels, damage may occur in a matter of seconds.

- If the target is an integrated circuit device or a solid-state device, use of the environmental exposure conditions as a basis for failure is appropriate. Such components typically possess limited thermal mass and high surface area, so they will reach equilibrium with the thermal environment quickly.

Additional failure mechanisms may be relevant to specific types of target elements. This may include smoke exposure and water spray. For example, exposure to smoke is a known mode of failure for devices that rely on fine mechanical motions, such as a strip chart recorder, sensitive digital circuits, and some high-voltage components. Appendix T provides an approach on how to consider smoke impact on equipment and operators. Water sprays (e.g., from firefighting activities) may cause the failure of a range of electrical components. The current state of the art does not fully support a detailed evaluation of such failure mechanisms. If these failure modes are neglected in the analysis, the analyst should acknowledge this as a potential weakness. Where such additional failure mechanisms may be critical to risk quantification, the analyst may choose to incorporate such failure mechanisms using available tools and/or expert judgment. Such assessments may be incorporated in the risk quantification, or may be utilized in the context of sensitivity studies.

- If the fire scenario involves an electrical panel, it may be prudent to assume the smoke-induced failure of all digital or integrated circuit components within the originating fire panel regardless of the assumed fire size, intensity, or duration.
- In the event of a fire involving high-energy electrical components (e.g., MCC, breaker, switchgear, etc.), it may be prudent to assume the smoke-induced failure of components in adjoining panels or cubicles, especially if those cubicles or panels are connected by features like buss ducts or a common ventilation system.

The final outcome of this step is a probability distribution of time to target set damage:

$$Pr(t = \text{target set damage time}) = Pdam(t) \qquad \textbf{Equation 11-2}$$

The distribution is a result of aleatory uncertainties in the heat release rate and other parameters determining the severity of a fire. As a result, the time to damage may span a wide range. To obtain this distribution, the analyst may need to conduct the fire growth, propagation, and damage analysis for several parameter values from the range of possible values. Based on probabilities associated with the selected parameter values, the time to damage distribution may be concluded. This process is further discussed in Appendix U in the context of defining the severity factor of the fire scenario.

Note that when the target set involves more than one item, the analyst should choose what damage time to apply. In reality, the target set fails when all elements of the set have reached the damage threshold. However, care should be taken to ensure that one target remote from the fire does not inappropriately drive the damage time. In many cases, the analyst may choose to assume loss of the target set given loss of any target item in the set. This is certainly a conservative approach. This approach is often applied when the specific location of the target elements within the compartment is not well established. For example, the target cables may be within a stack of cable trays, but the exact position of the cables in specific trays may be unknown. In such a case, the analyst may conservatively assume that all target cables are located in the bottommost tray of the stack. If the position of the cables within different layers of a stack is known, the analyst may postulate multiple scenarios based on the number of cable trays affected, counting from the bottom. That is, if the target set involves cables in two separate cable raceways, one of which will be damaged sooner than the second, it may be appropriate to define two subscenarios; one involving loss of the first raceway only, the second involving loss of both the first and second raceways.

11.5.1.8 Step 8.a: Conduct Fire Detection and Suppression Analysis

This step estimates the detection and suppression time for each fire scenario. As defined earlier, the combined detection and suppression time represent that time after fire ignition when the fire is brought under control, meaning that no further damage may be experienced. The final outcome of this step is expected to be an aleatory probability distribution for detection and suppression time. The uncertainties represented by the distribution are mainly due to the aleatory uncertainties fire brigade actions, fire detection response, fixed fire suppression system response, etc.

The discussions provided in this step are in general terms. The analyst may elect to follow any methodology to establish the various detection and suppression times and related probability distributions. Appendix P provides an event-tree-based methodology for estimating the probability distribution. The methodology takes into account the interactions among prompt detection, prompt suppression, fixed suppression systems, and fire brigade response.

At this point of the analysis, the general fire protection strategy for the room has been identified. In this step, the analyst considers specific fire detection and suppression features of the scenario. Fire detection and suppression features, including passive systems to be credited in the analysis, should be identified and described.

- If a fixed fire detection system is being credited, it is appropriate to identify the type of detectors used, where alarm signals are transmitted to, and the coverage of the system (e.g., spot detection versus area or zone coverage).
- If a fixed fire suppression system is being credited, it is appropriate to identify the type of suppression system (e.g., wet-pipe sprinklers, gaseous system, deluge, directed spray, etc.) and the coverage of the system (e.g., spot suppression versus area or zone coverage).

To assess the effectiveness of manual fire detection and suppression, it may be appropriate to discuss the level of compartment occupancy. Occupancy features of potential interest may include a continuously occupied compartment; presence of fire watch; compartment use as a regular throughway for personnel entering or leaving areas of the plant; and compartment subjected to periodic passage of plant personnel for status.

11.5.1.8.1 Step 8.a.1: Assess Fire Detection Timing

The first step in the fire detection and suppression analysis it to assess the timing of fire detection. Fire detection is relevant, in particular, because it triggers the human response to the fire event. This includes any operator actions anticipated in response to the fire, and activation of the manual fire brigade.

The detection response analysis can consider both fixed detection systems and manual detection of fires. In many cases, one or the other may dominate the analysis.

- In continuously occupied spaces, human detection of a fire may be at least as effective as fixed detection. In such cases, it is appropriate to ensure that the ventilation system will not draw fire products away from the human occupants, reducing the likelihood of human detection (e.g., control panels may be used as a return air plenum for the ventilation system, reducing the likelihood of human detection).
- In spaces subject to a continuous fire watch, human detection of fires is likely to occur quickly.
- It is likely that fires ignited during hot work will be quickly detected if a fire watch has been posted.
- In unoccupied spaces protected by fixed detection, the response time of the fixed detection system will likely dominate the detection response. However, in such cases, the potential failure of the detection system should also be considered.

In assessing the response of a fixed fire detection system, the time constant of the fire detector should be considered. It is also appropriate to consider the configuration of the detection system, and the migration time of fire products to the detector. Fire modeling tools may be applied to this analysis if determined by the analyst to be appropriate.

Appendix P provides additional information on the analysis of fire detection timing, and in particular, the analysis of detection of fires by plant personnel, including fire watches.

11.5.1.8.2 Step 8.a.2: Assess Timing, Reliability, and Effectiveness of Fixed-Fire Suppression Systems

The analysis of fixed fire suppression response involves three primary factors: actuation timing, effectiveness, and reliability.

Timing involves the application of fire modeling tools to estimate the time required for the system to sense an appropriate actuation demand.

- A sprinkler head requires heat sufficient to break the fusible link in the head itself.
- A preaction system may require a valid detection signal before actuation is possible. In some cases (e.g., a cross-zone system), multiple detection signals may be required.
- Gaseous suppression systems typically require either a manual actuation or actuation of a cross-zone fire detection system. In addition, a predischarge alarm will sound to allow time for personnel to evacuate. This will typically result in an actuation delay that should be included in the time analysis.

- A manually actuated fixed suppression system that is operated locally would require an individual with the authority to actuate the system arrive on the scene, assess the situation, and actuate the system.
- A manually actuated fixed suppression system operated remotely (e.g., from the MCR) may require that personnel arrive on the scene, report back to the remote control station, and that someone at the remote location actuate the system. (Note that in such cases, a local actuation capability would likely be provided in addition to the remote capability.)

Reliability refers to the likelihood that given a valid actuation signal, the fixed suppression system will actually discharge suppressant consistent with the design intent. Systems may fail to actuate for a variety of reasons, and this should be accounted for in the analysis. The fallback position given failure of a fixed fire suppression system may involve either recovery of the failed suppression system, or manual fire suppression. Note that attempts to recover a fixed fire suppression system may delay subsequent manual fire suppression efforts (e.g., firefighters may be reluctant to enter a room if they know that attempts are being made to actuate a fixed suppression system).

For Fire PRA, it is generally considered appropriate to utilize system reliability estimates derived from generic data for general industrial/commercial applications. However, plant-specific experience should be considered. In particular, it is highly unlikely that the plant will have a sufficient experience base to justify an increase in system reliability above the generic values. However, plant-specific experience may indicate a need to reduce system reliability. For example, adverse experience with fire pump availability may indicate a higher likelihood of failure on demand for the supported firefighting water systems.

The final factor is effectiveness. This refers to the appropriateness of the fixed suppression system in the context of the specific fire ignition source scenario considered.

- A partial-coverage fire sprinkler system may provide highly effective protection for some fire ignition sources in a compartment, and virtually no protection for other sources, depending on their location relative to the zone of coverage.
- Obstructions may render a fire sprinkler system ineffective against fire ignition sources located below the obstructions.
- A gaseous fire suppression system may provide inadequate concentrations and/or inadequate soak times to ensure fire extinction. Hence, a reflash of the fire may occur, requiring either an additional discharge of suppressant (if available) and/or follow-up manual fire suppression.
- Fire sprinklers located near the ceiling or roof of a very tall enclosure may not actuate given a fire located near the floor of the compartment.

The assessment of fire suppression system effectiveness remains an exercise in the application of expert judgment. Compliance with all aspects of the code of record can nominally indicate system effectiveness. However, field verification of system effectiveness in the context of the specific physical fire scenario under analysis is appropriate.

Appendix P provides additional information to support the assessment and analysis of fixed fire suppression systems.

11.5.1.8.3 Step 8.a.3: Assess Manual Fire Brigade Response

The ultimate fallback response to fires in most areas of the plant is provided through the manual fire brigade. In this task, the timing of fire brigade response is assessed. If the manual fire brigade is not credited for suppression in the fire scenario, this step is skipped.

In this task, the analyst utilizes probability curves tailored to the type of fire scenario being analyzed that characterize the historical evidence regarding manual fire brigade response. In particular, the curves are derived from the FEDB and estimate the likelihood of manual fire suppression versus time. Appendix P provides additional detail on the recommended approach.

Note that the recommended approach is based on historical evidence, and as such, represents a relatively generic industry response model. While past practice has included methods based on plant-specific brigade response times, such methods are not recommended. Experience indicates that the brigade response methods provide no mechanism for assessing the likelihood of longer-duration fires. The experience-based approach directly accounts for longer-duration fires based on the fire event experience. It does not, however, provide a mechanism for updating the generic curves to reflect plant-specific experience.

11.5.1.8.4 Step 8.a.4: Estimate Probability of Fire Suppression as a Function of Time

In this step, the analyst combines information from Steps 8.a.1 through 8.a.3 to develop a composite fire suppression probability curve. That is, information on fire detection, fixed fire suppression, and the response of the manual fire brigade are combined into a single curve reflecting the probability of fire suppression versus time:

$$Pr(t = \text{suppression time}) = Psupp(t) \qquad \textbf{Equation 11-3}$$

An event-tree-based methodology is provided in Appendix P for this purpose.

11.5.1.9 Step 9.a: Calculate Conditional Nonsuppression Probability and Severity Factor

In this step, the analyst develops a conditional nonsuppression probability estimate for the fire scenario. Recall that in the fire PRA context, the critical question is whether or not the fire is suppressed before the target set is damaged. The probability of nonsuppression is an estimate of the overall likelihood that given a fire in the postulated fire ignition source, damage to the target set will occur before the fire is suppressed.

The non-suppression probability combines the damage probability distribution generated in Step 7.a with the probability of suppression curve generated in Step 8.a.4.

$$P_{NS} = Psupp(t \geq tdam) \qquad \textbf{Equation 11-4}$$

Often, as discussed in Step 7, there are uncertainties in the heat release rate and other parameters that define the intensity characteristics of the fire that affect the time to target set damage. This leads to uncertainties in damage time, which is also expressed by a probability distribution,

Pdam(t). From this distribution, the severity factor may be defined. However, since the variation in damage time affects probability of nonsuppression, the severity factor is defined in combination with the nonsuppression probability. Thus, the two factors, $SF_k \cdot P_{ns,k}$, in Equation 11-1 can be evaluated simultaneously from:

$$SF_k \cdot P_{NS,k} = \int_{All\ t_{damage}} \frac{dP_{dam}(t)}{dt} P_{Supp}(t_{Supp} > t)dt \qquad \textbf{Equation 11-5}$$

Appendix T provides a simplified approach to evaluated Equation 11-5. The approach is assumes that heat release rate is the only parameter representing fire severity.

11.5.1.10 Step 10.a: Calculate Scenario Frequency

The scenario frequency can now be calculated using Equation 11-1. The ignition frequency, λi,k, is established in Step 5.a.2; the combined severity factor and nonsuppression probability is established in Step 9.a. This frequency can be used in combination with CCDP to estimate the CDF associated with the fire scenario.

11.5.1.11 Step 11.a: Document Analysis Results

- The final step in the detailed fire modeling task is to document the analysis results. It is recommended that the analyst consider a two-tier documentation approach. The first tier is an overview of the analysis for each fire scenario. The first tier documentation should be sufficient in detail to allow for an independent reader to understand the scenarios postulated, the basis for their analysis, the tools utilized in the analysis and basis for selection, and the final results of the analysis.
- The second tier documentation should provide the details of each individual analysis performed. This level of documentation would include details of scenario selection process, the fire modeling analyses performed, including details of the input parameters used, and the basis for their selection. All specific considerations and assumptions should be recorded clearly.

11.5.1 Procedure for the Analysis of Fire Scenarios Impacting the Main Control Room

Because of the unique characteristics of the MCR, a separate procedure is provided here for analyzing its fire risk. Characteristics most relevant to fire risk include the following.

1. The control and instrumentation circuits of all redundant trains for almost all plant systems are present in the control room. Furthermore, redundant train controls may be installed within a short distance of one another. Therefore, small fires within control panels may be risk-significant.

2. The room is continuously occupied, which provides the capability of “prompt detection and suppression.”

3. Plant safety depends on the well-being of control room operators. A fire adversarily affecting the operators may have severe safety implications. Therefore, evaluating control room abandonment conditions may be necessary. Abandonment refers to situations in which control room operators are forced to leave due to untenable fire generated conditions (temperature, toxicity, and visibility).

A review of Control Room fire events reveals that none of the fires affected items beyond the point of ignition. In all cases, the fire was discovered by Control Room personnel and extinguished using hand-held extinguishers. Since the Control Room is occupied at all times, the likelihood of a very large fire affecting a large number of items inside the main control board is extremely unlikely. Should such a fire occur, the principal impact would more likely be Control Room abandonment by the operators than a wide-spread equipment damage. The fire brigade would remain in the control room and continue fighting the fire, which would most likely retard the fire spread. Therefore, it is recommended that fire risk analysts identify localized areas on the control boards where control and instrumentation damage may have some significant impact on core cooling after a reactor trip.

Target sets consist, for the most part, of control- and instrumentation-related components and wiring within one, adjacent, or nearby panels and cabinets. As opposed to other compartments, where targets are usually cables throughout the area are exposed to fire conditions, control room targets are cabinets controlling safe shutdown related functions. Cabinets in some control rooms are equipped with smoke detectors, which can reduce the fire detection time and indicate which specific cabinet is on fire. Although control rooms are equipped with smoke detector systems, usually no fixed suppression is available. Manual suppression is usually the extinguishing method used. Each of these characteristics will impact the risk analysis by influencing the nonsuppression or abandonment probabilities.

Control room fire modeling is used to estimate the following:

1. Conditional probability of damage to a set of target items, and
2. Forced control room abandonment time.

The possibility of forced control room abandonment should be considered for all fire scenarios.

11.5.1.1 The Overall Approach

The approach described in this procedure for analyzing fire scenarios in the control room is similar to the one for single compartment fire risk analysis described above. However, since a small fire may affect a risk-significant set of components, the analysis here hinges on target sets, assuming a large number of possible fire scenarios may affect the same target set. In contrast, in single compartment fire analysis, the fire scenarios were identified starting with specific ignition sources.

The following steps are recommended for a control room fire analysis.

Step 1.b: Identify and Characterize Main Control Room Features

Step 2.b: Estimate control room fire frequency

Step 3.b: Identify and Characterize Fire Detection and Suppression Features and Systems

Step 4.b: Characterize Alternate Shutdown Features

Step 5.b: Identify and Characterize Target Sets

Step 6.b: Identify and Characterize Ignition Sources

Step 7.b: Define Fire Scenarios

Step 8.b: Conduct Fire Growth and Propagation Analysis

Step 9.b: Fire Detection and Suppression Analysis and Severity Factor

Step 10.b: Estimate Failure Probability of Using Alternate Shutdown Features

Step 11.b: Estimate Probability of Control Room Abandonment

Step 12.b: Calculate Scenario Frequencies

Step 13.b: Document Analysis Results

Each step is discussed separately below.

11.5.1.1.1 Step 1.b: Identify and Characterize Main Control Room Features

This step gains an understanding of the specific features and related fire protection systems of the control room. The following general information may be collected:

- Control room height, length, and width;
- Location, shape, and dimensions of various control panels;
- Wall construction type and thickness;
- General information about compartment ventilation (e.g., in some cases, the ventilation is routed through the control panels);
- Other compartments considered part of the MCR proper; and
- Ceiling soffit or beam pocket features of the main ceiling. Height, construction materials, and specific features of the false ceiling. All openings in the false ceiling should be specifically noted as potential pathway for hot gases entering the area between the two ceilings.

11.5.1.1.2 Step 2.b: Estimate Control Room Fire Frequency

In this step, the overall MCR fire frequency is estimated using the following equation:

$$\lambda_{MCR} = W_{L,MCR}(\lambda_{MCB} + W_{PWC,Elec.Cab,MCR.}\lambda_{PWC,Elec.Cab.} + W_{transients,MCR}\lambda_{transient} + W_{welding,MCR}\lambda_{welding})$$

where:

λ_{MCR} : Main Control Room fire frequency

$W_{L, MCR}$: Location weighting factor for the MCR

λ_{MCB} : Main Control Board fire frequency (Table 6-1, bin 4)

$W_{PWC, Elec. Cab, MCR.}$: Ignition source weighting factor of Plant Wide Electrical Cabinets found in the Main Control Room.

$\lambda_{PWC, Elec. Cab.}$: Fire frequency of Plant Wide Electrical Cabinets (applies to all electrical cabinets in the plant including those panels in the MCR that were not labeled as MCB.) (Table 6-1, bin 15)

$W_{transients, MCR}$: Ignition source weighting factor of Control/Aux/Rx Bldg Transient Fire events that may occur in the MCR. This fraction should be computed using the same method as for transients for other parts of the location using the following influencing factors:
- Maintenance – Low
- Occupancy – High
- Storage – High (reflecting large quantity of paper materials)

$\lambda_{transient}$: Control/Aux/Rx Bldg Transient fire frequency (Table 6-1, bin 7).

$W_{welding, MCR}$: If welding is allowed in the MCR during power operation, this ignition source weighting factor should be evaluated in the same way as that for transient fire using the following influencing factors:
- Maintenance – Low
- Occupancy – No
- Storage – No

$\lambda_{welding}$: Control/Aux/Rx Bldg, transient fires cause by welding frequency (Table 6-1, bin 6).

It must be noted that in this step the overall control room fire frequency is established. In the following steps, the analyst may need the occurrence frequency of a specific fire scenario involving a specific ignition source. For example, it is anticipated that in most fire PRAs the MCB will be analyzed separately in some level of detail. The analyst should then review the analysis conducted in this step and glean from it the frequencies relevant to the specific scenario.

11.5.1.1.3 Step 3.b: Identify and Characterize Fire Detection and Suppression Features and Systems

In this step, the analyst characterizes the detection and suppression features and systems that may be credited when analyzing the fire scenarios. This may include any and all means of detection and suppression available. The following specific features should be verified:

- Smoke detectors under the main ceiling,
- Smoke detectors inside the control panels,

- Presence, location, and characteristics of other detectors,
- Presence, location, and characteristics of detectors in the ventilation ducts,
- Presence of fixed fire suppression systems inside and outside the control panels,
- Location and characteristics of portable fire extinguishers, and
- Location and characteristics of the hose reels.

Note that the discussions provided in Step 2.a may apply to the Control Room as well.

11.5.1.1.4 Step 4.b: Characterize Alternate Shutdown Features

The ability to achieve safe shutdown from outside the MCR is known as alternate shutdown capability. The features of alternate shutdown capability vary widely among the nuclear power plants. In some plants, a control panel is installed at a location away from the control room where the operators can control and monitor key core cooling functions and parameters independent of the MCR. It is important to note that these panels in principle, are required to be electrically independent from the effects of circuit failures in the MCR panels. In other plants, alternate shutdown capability is achieved through a set of control points and control panels located at various points of the plant requiring coordinated actions of several operators.

It is necessary for the fire risk analysts to understand the alternate shutdown capability of the plant. The specific features of the capability may influence the fire scenarios identification process (Step 6.b, below). For example, the analyst may select safety-related target sets on the panel that are not backed up by an alternate shutdown control or instrumentation circuit.

11.5.1.1.5 Step 5.b: Identify and Characterize Target Sets

The target sets can be identified by systematically examining combinations of control and instrumentation items found on the control panels, electrical cabinets, wireways, and cable raceways inside the MCR. The analyst may examine the control panels from one end to the other, noting the various Fire PRA-related components. Groups of adjacent controls and instrumentation should be identified. Based on a cursory, conservative estimation of the CCDP, the analyst should identify target sets that, if damaged by fire, may have a risk-significant impact.

Similar to target set identification process for single compartments, the analyst should assume that the elements of a set are located within the reach of a potential fire. Note that the fire may occur at any point of a control panel or electrical cabinet and may propagate at all directions. The analyst may also assume the possibility of an exposure fire affecting multiple cabinets. Identification of ignition sources is addressed in Step 6.b, below.

11.5.1.1.6 Step 6.b: Identify and Characterize Ignition Sources

This step characterizes the ignition sources that may affect the identified target sets. The approach provided in Step 3.a applies to the MCR as well. Similar to Step 3.a, the final product of this step is a list of ignition sources, their relevant characteristics (e.g., type, quantity, dimensions and heat release rate profile), and fire ignition frequencies associated with each source.

The main fixed ignition sources of the MCR are typically the main control board, other control panels, electrical cabinets, wireways, and cable raceways. Some control rooms may also include kitchen appliances and other electrical devices. As noted in the preceding step, assume that the fire might occur at any point on a control panel or an electrical cabinet.

Transient combustibles should also be identified in this step. Those areas of the MCR where transient combustibles could potentially be found may be marked on a layout drawing. Typical transient ignition sources in the control room are stacks of procedure binders, trashcans, chairs, etc. Any selected transient fire should be located so that the targets are challenged by the fire-generated conditions. Documentation of any program controlling the amount and location of transient combustibles throughout the control room may be helpful for identifying scenarios with transient ignition sources.

As part of this step, the frequency of fire ignition is estimated. Frequency of fire occurrence involving a specific ignition source can be gleaned from the information generated in Step 2b, above.

11.5.1.1.7 Step 7.b: Define Fire Scenarios

Control room fire scenarios can be categorized as:

- Fire inside one control panel or multiple adjacent control panels that open into each other, impacting control- and instrumentation-related components within the affected panel;
- Fires affecting two adjacent control cabinets that do not open into each other; and
- Fires affecting two nonadjacent control cabinets.

Using the target sets identified in Step 5.b, a set of fire scenarios can be identified. The analyst for each target set, as in the case of single compartment fire analysis, may identify the fire scenarios in terms of an ignition source, growth within the ignition source, propagation to secondary combustibles, and finally damage to the target set. This approach may be used for transient fires and fire scenarios involving electrical devices other than control panels. For control panel fires, Appendix S provides a methodology where a large number of potential fire scenarios are analyzed simultaneously. In that methodology, the combined probabilities of nonsuppression and fire intensity are estimated by postulating the fire ignition location and fire intensity as two random variables that follow certain probability distributions. In other words, a large number of fire scenarios are analyzed simultaneously.

11.5.1.1.8 Step 8.b: Conduct Fire Growth and Propagation Analysis

Fire Inside a Control Cabinet

One may attempt to model the fire spread from a point of origin to other combustibles inside a control panel. However, modeling such phenomenon is beyond the capabilities of current state-of-the-art analytical tools. In the absence of an analytical tool, a probabilistic model is presented in Appendix L that is based on information obtained from EPRI's Fire Events Database [11.1], and a series of cabinet fire experiments reported in NUREG/CR-4527 [11.2]. The probabilistic model estimates the likelihood that a set of targets separated by a predetermined distance would be affected by a fire. The likelihood is effectively a combination of severity factors and nonsuppression probabilities integrated over all possible fire scenarios that may damage the postulated target set.

Two Adjacent but Separated Control Cabinets

Fire risk analysts may identify target sets located in two adjacent cabinets separated by a wall. The wall should not have any opening that may carry hot gases between the cabinets. Since there is a barrier between the cabinets, the approach described in the preceding section would not directly apply. The approach described in Appendix S for electrical cabinets may be used here with some modifications, as described below. It is also recommended that the analysts postulate transient combustible fires outside the control cabinets.

The following cabinet features may influence the fire impact on the postulated target set:

- Single wall separating two cabinets,
- Double walls with an air gap separating two cabinets, and
- Cabinets that may be open in the back.

Based on these conditions, four fire scenario situations can be envisioned:

1. Cabinets separated by a single wall and closed back,
2. Cabinets separated by a single wall and open back,
3. Cabinets separated by double walls and closed back, and
4. Cabinets separated by double walls and open back.

For cabinets separated by a single wall with back covers, the analyst may use the approach described in Appendix L to establish the likelihood of fires occurring in the exposing cabinet that could damage the wall. Per the approach recommended in Appendix S, it is assumed that the targets within the exposed cabinet would fail within 15 minutes of a fire impacting the wall between the two cabinets. A second nonsuppression probability may be multiplied to the fire scenario frequency based on a 15-minute fire duration (per Appendix S), noted in the equation below:

$$\lambda_{Adjacent\,Cabinets}(d_a) = \lambda_{MCB}[SF \cdot P_{ns}](d_a)\,P_{ns}(15\,\text{min}),$$

where

d_a = maximum distance between target elements and the separating wall inside the exposing cabinet.

The 15-minute delay criterion is an attempt to shortcut modeling the temperature rise inside the exposed panel.

For cabinets with double wall separated by an air gap and back covers, as suggested in Appendix S, it can be assumed that the fire would not propagate between the cabinets. However, the possibility of transient combustible fires should be considered. The methodology for fire growth and propagation analysis described for single compartment fires can be used to model transient combustible fire propagation and impact on the cabinets. To estimate the time to target damage, assume 15 minutes of continuous exposure after the farthest cabinet wall temperature reaches cable damage threshold.

For cabinets with open an back, the possibility of damage from a transient fire outside should be considered. The primary mechanism of damage would be radiative heat transfer from the exposing flames. For damage time, use the time that the temperature of the farthest target item reaches damage threshold.

Nonadjacent Cabinets

The likelihood of a fire internal to a control panel damaging a nonadjacent cabinet is very small. As noted in the preceding sections, all control room fire events experienced by the industry affected only a small area of the control panel. There are generally no high-energy devices in a typical control room, either. Therefore, the possibility of a control panel fire damaging a nonadjacent panel may be ignored.

Transient combustible fires are deemed the only credible fire scenarios that may cause damage to nonadjacent panels. The methods described for a single compartment fire may be used here. For damage criterion, the following is suggested.

- For closed back panels, assume 15 minutes of continuous exposure to the effects of the fire after panel wall temperature reaches cable damage threshold.
- For open back panels, if the exposing fire is behind the panel, calculate the time for the temperature of the farthest target to reach damage threshold temperature.
- For open back panels, if the exposing fire is in front of the panel, calculate the time that an area of the panel where the farthest target resides reaches cable damage threshold temperature and remains at that intensity for 15 minutes.

11.5.1.1.9 Step 9.b: Detection and Suppression Analysis and Severity Factor

For control panel fires, Appendix L provides a method for estimating the probability of nonsuppression and the severity factor. In the case of other fires (e.g., transient fires), the methodology provided for single compartment fires may be used (see Appendix P - Detection and Suppression Analysis).

11.5.1.1.10 Step 10.b: Estimate Failure Probability of Using Alternate Shutdown Features

To eventually quantify main control room fire risk, the possibility of safe shutdown using the alternate shutdown means (i.e., safe shutdown from outside the control room) should be included in the analysis. Two different approaches may be followed.

1. An overall failure probability is estimated representing the failure of the alternate shutdown means.

2. The alternate shutdown procedure is integrated in the plant response model (i.e., the fault trees and event trees). The core damage sequences are adjusted to include failures associated with alternate shutdown means, and the human error probabilities are reevaluated based on the alternate shutdown procedures.

The first approach (that is, the use of an overall probability value) can be used if the probability value is evaluated conservatively and a proper basis is provided. This approach was used in several IPEEE submittals. For example, in many cases, 0.1 was used as a point value estimate for the probability [11.3].

For the second approach (i.e., integrating the alternate shutdown procedures in the plant response model), the following steps are suggested. The first step is to review the applicable procedures and associated documentation. This review should identify the preferred equipment for safe shutdown, and the operator actions necessary to actuate and control them. (If the procedure identifies backup equipment, the corresponding shutdown method should also be evaluated.) If a timeline is not provided in the procedure or other associated documents, a general timeline of key operator actions should be developed. The operator actions performed in the control room and automatic system actuations upon which the timeline is based should also be identified. This step, in effect, establishes the “design basis” or capability of alternate shutdown features.

The second step is to verify that alternate shutdown capabilities satisfy the potential accident sequences associated with the postulated target set damage. Both the available equipment and the timeline for planned actuation should be evaluated.

To evaluate the planned timeline, accident sequence timing modeled in the plant model (i.e., fault trees and event trees) should be compared with the alternate shutdown procedure timeline. The comparison should ensure that the planned operator action times upon which alternate shutdown procedures are based will be less than the operator actuation or recovery times postulated for the applicable fire-induced accident sequences.

Consideration should also be given to how the timeline might change under various failure conditions. For example, if the procedure assumes that auxiliary feedwater is available and actuated from the control room, the analyst may need to consider the possibility of a stuck-open safety relief valve, thus significantly changing the time available to recover failed auxiliary feedwater system. As another example, a fire in a portion of the main control board may cause a RCP seal LOCA in excess of normal makeup capability. Complicated operator actions are generally necessary to safely shut down the plant under such conditions. This is further complicated if the alternate shutdown procedure has to be implemented.

Clearly, the timelines and especially comparison of the timelines between those in the fault tree and event tree models and the alternate shutdown procedures should be used to establish the human error probabilities. Furthermore, if needed, those times can be used to quantify dynamic human actions or evaluate the feasibility of recovery actions, should random equipment failures occur.

11.5.1.1.11 Step 11.b: Estimate Probability of Control Room Abandonment

In addition to fires affecting selected targets, the control room analysis should evaluate the possibility of forced abandonment conditions. For all control room fire scenarios, the possibility of control room abandonment should be taken into account.

Abandonment is assumed to be solely dependent on habitability conditions of the control room. However, the analyst may postulate that the alternate shutdown procedure would be activated before conditions in the control room worsened. The time to activate the alternate shutdown procedure is suggested to be established based on plant operating procedures more than control room habitability conditions. The final decision to abandon the control room is assumed to depend on habitability conditions. To establish timing of this event, it is suggested that at least one of the following criteria be satisfied.

- The heat flux at 6′ above the floor exceeds 1 kW/m^2 (relative short exposure). This can be considered as the minimum heat flux for pain to skin. Approximating radiation from the smoke layer as $q''_r = \sigma \cdot T_{sl}^4$, a smoke layer of around 95°C (200°F) could generate such heat flux.
- The smoke or hot gas layer descends below 8′ from the floor.
- Optical density of the smoke is less than 1 m^{-1}.
- A panel fire affects two target items 7′ apart (see Section 11.2, above).

Zone models and field models are the recommended fire modeling tools for estimating the hot gas layer temperature, heat flux, descent rate, and obscuration. The following considerations should be taken into account:

- If the panels are open in the back or there are vent openings at the upper half of the panel, the analyst may assume that the fire has occurred in the open inside the control room.
- The possibility of transient combustibles leading to control room abandonment should be considered.

- Two possibilities should be taken into consideration; (1) the ventilation system is turned off, causing hot gases and smoke to accumulate inside the control room, and (2) the ventilation system is on smoke-purge mode. The conditional probabilities of entering each condition may be calculated based on operator error in initiating smoke-purge mode and equipment failure.

For the ventilation system on purge mode, the following should be investigated:

- Possibility of fire causing the ventilation system to trip, and
- Room purge rate as compared to the hot gas and smoke generation rate.

The analyses should estimate the time to forced abandonment of the control room. The nonsuppression probability and severity factor should be multiplied to calculate the conditional probability of experiencing forced evacuation given a fire in the control room.

11.5.1.1.12 Step 12.b: Calculate Scenario Frequencies

The initial ignition source frequency for a control room fire is determined using the method described in Steps 2b and 6b. The scenario frequencies are then calculated by multiplying the ignition frequency with the combined nonsuppression probability and severity factor. The influence of alternate shutdown procedures is included in the CCDP, which is calculated using the plant model or as a simple single probability value.

11.5.1.1.13 Step 13.b: Document Analysis Results

Similar to Step 11.a, the final step of the control room fire modeling is to document the analysis results. As in Step 11.a, it is recommended that the analyst consider a two-tier documentation approach. The first tier may provide an overview of the analysis. The first-tier documentation should be sufficient in detail to allow an independent reader to understand the scenarios postulated, the basis for their analysis, the tools utilized in the analysis and basis for selection, and the final results of the analysis. The second-tier documents should provide the details of each individual analysis performed. This level of documentation would include details of scenario selection process, the fire modeling analyses performed (including details of the input parameters used and the basis for their selection). All specific considerations and assumptions should be recorded clearly.

11.5.2 Procedure for the Analysis of Fire Scenarios Impacting Multiple Compartments

Commercial nuclear power plants have numerous interconnected compartments that may be aligned horizontally or vertically. Connections between compartments usually include fire doors, stairways, unsealed penetrations, openings, gratings, etc.

NUREG 6738, *Risk Methods Insights Gained from Fire Incidents*, documents that "the only case of room to room fire propagation experienced to date in a commercial U.S. reactor is the 1975 Browns Ferry fire." In this case, the spread of fire from the cable spreading room into the reactor building is directly attributable to the incomplete nature of the cable penetration seals at the time of the fire and the air pressure difference between the two sides of the wall. There are, however, other cases in which room-to-room smoke propagation did occur. Citing again NUREG 6738, "none of the cases in U.S. reactors led to significant damage or other adverse effects, although some hampering of operator actions is evident." In some of these fires, smoke found its way into the control room, but no evacuation of operators occurred.

Considering the numerous interconnected compartments, and the detailed analysis necessary for evaluating fire generated conditions in multicompartment scenarios, a screening process is recommended to reduce the number of detailed evaluations. That is, the recommended process emphasizes screening multicompartment combinations from the beginning before identifying fire scenarios.

Detailed fire modeling of multicompartment fires refers to the evaluation of fire-generated conditions in one compartment that spread to adjacent ones. The fire modeling assumptions and recommended steps of this task are similar to those described in Task 11a, Detailed Fire Modeling for single compartments. In general, the same analytical process is applied to evaluate target damage in adjacent compartments. A separate procedure is necessary primarily for describing how to reduce the number of multicompartment combinations requiring detailed analysis. Most of the procedure focuses on describing this process.

The purpose of this section is to provide an approach in screening and evaluating multicompartment fire scenarios using screening techniques and analytical fire modeling tools specifically developed for such scenarios. Specifically, an approach is provided for (1) screening multicompartment fire scenarios, and (2) evaluating target damage in multicompartment fire scenarios that are not screened.

It is strongly recommended that single compartment fire analysis be performed before fire modeling for multicompartment is conducted to take advantage of the information and analysis already available.

The approach presented here is based on the following assumptions.

11.5.2.1 The Overall Approach

The main objective of this task is to evaluate the risk associated with multicompartment fire scenarios. The risk is evaluated by performing a multicompartment screening and a detailed evaluation of fire scenarios in the unscreened compartments.

The following steps are recommended:

Step 1.c: Exposing and Exposed Compartments Matrix

Step 2.c: First Screening–Qualitative

Step 3.c: Second Screening–Low Fire Load Exposing Compartments

Step 4.c: Third Screening–Frequency of Occurrence

Step 5.c: Fourth Screening–CDF Based

Step 6.c: Detailed Analysis

Step 7.c: Document the Analysis

Each step is discussed separately below.

11.5.2.1.1 Step 1.c: Exposing and Exposed Compartments Matrix

The objective of this task is to create a matrix of exposing and exposed compartments. Fire ignition occurs in the exposing compartment and propagates to the exposed compartments. The matrix would effectively present all potential multicompartment fire scenarios that start with an exposing compartment and propagate through a set of well-defined pathways into a set of exposed compartments. It is strongly recommended to develop this matrix as part of a plant walkdown.

The matrix should include the following information: exposing compartment identifier, exposed compartment identifier, means by which fire effects (primarily hot gases) would propagate from exposing to exposed compartment (i.e., propagation pathway), status or condition of the pathway, and characteristics of the pathway. There could be more than one pathway between two compartments. For example, there could be a personnel door and a ventilation opening near the ceiling. The analyst should note the dimension (especially the height) and status of the door (i.e., normally open or closed). The ventilation opening may have a spring-loaded fire damper in it that would close when a fusible link breaks open from high temperature conditions.

There could be more than one exposed compartment associated with an exposing compartment. For example, there could be one compartment to the East and another to the North of an exposing compartment. It is also possible that there could be openings in the ceiling, creating a pathway between an exposing compartment with an exposed compartment directly above it.

Communication through ventilation ducts may need to be reviewed and verified. There is a possibility of hot gas propagation through ventilation ducts to either the ventilation equipment room or to other compartments if the ventilation system is shut off. Clearly, for these scenarios, the probability of fire damper failures should be included in the analysis.

For each exposing compartment, the matrix should present a set of multicompartment fire scenarios. The following rules are suggested to identify the multicompartment scenarios:

- Postulate only one barrier failure (e.g., door left open or damper fails to close),
- Assume smoke impact on equipment has minimal effect, and
- Allow the hot gas to travel to as many compartments as physically possible. Note however that fresh air is entrained as smoke migrates from room to room. This entrainment lowers the smoke temperature. Analysts should include multi-compartment combinations in which the migrating smoke is high enough to generate target damage.

For example, if exposing Compartment A is adjacent to Compartments B to the west and C to the west. In both cases, there is a normally closed door between the compartments. Two scenarios should be postulated. Scenario 1 would include a fire in Compartment A propagating to Compartment B through the door between them, assuming that the door is open (a failure mode). Scenario 2 would also start with a fire in Compartment A propagating to Compartment C, in this case through the door between them, again assuming that this second door is open. Propagation of the fire into all three compartments may be considered very unlikely unless the analyst observes conditions or has a basis to consider that simultaneous failure of both doors is a likely event.

If there are normally open pathways between compartments, the analyst should assume that the hot gas would travel among all exposed compartments regardless the number of the affected compartments. In some cases, this may include a large part of the plant. If such a condition is encountered, it is recommended to collect compartments to be clearly identified and conduct a detailed analysis per Step 6.c, below. In Step 6.c, the analyst would postulate scenarios based on fixed and transient ignition sources, calculating the reach of the hot gas layer for each case.

11.5.2.1.2 Step 2.c: First Screening – Qualitative

The first screening of the scenarios can be based on the contents of the exposed compartments. A scenario may be screened if one of the two following criteria is satisfied:

- The exposed compartment(s) do not contain any Fire PRA components or cables, or
- The fire PRA components and cables of the exposed compartment(s) are identical to those in the exposing compartment.

11.5.2.1.3 Step 3.c: Second Screening – Low Fire Load Exposing Compartments

Exposing compartments that do not include combustible loading sufficient for generating a hot gas layer in any of the exposed compartments can be screened out. The following steps may be followed.

Step 3.c.1: Determine a conservative heat release rate value for screening. For each exposing compartment, identify a combination of fixed ignition source and secondary combustibles (e.g., cable trays above, or pool fires) that produce the highest heat release rate.

- Use the information provided in Appendix G for HRR values. As a conservative practice, one may use the recommended 98th percentile of the HRR probability distribution.
- Add to the fixed ignition source any heat release rate from intervening combustibles such as cable trays, etc.

Step 3.c.2: Determine the HRR necessary for a damaging hot gas layer using hand calculations for room temperature and the cable damage temperature.

Step 3.c.3: Compare HRR values obtained above. Determine if a damaging hot gas layer can occur in the exposed and exposing compartments. Screen out those scenarios where a damaging hot gas layer cannot be generated.

11.5.2.1.4 Step 4.c: Third Screening – Frequency of Occurrence

Fire scenarios can be screened based on the likelihood of occurrence. In this step, the likelihood is established by multiplying the following three parameters:

1. Ignition frequency,
2. Combined severity factor and nonsuppression probability, and
3. Barrier failure probability.

Using the results of the preceding step and the method described in Appendix E, the combined severity factor and nonsuppression probability can be established. For nonsuppression probability, the analyst may use conservative measures if the necessary information about fire brigade response has not been collected yet.

For scenarios that include failure of a barrier in the open position, barrier failure probability should be estimated. Generally, data on barrier failure probability is sparse, and what is available is subject to many limitations. Initially, the analyst may use a screening barrier failure probability of 0.1. For scenarios that do not screen out, a more realistic barrier failure probability may be used. [11.4] (NUREG/CR-4840) defines the three barrier categories listed in Table 11-3 and provides their respective failure probabilities.

For barrier failure probabilities, the following additional information is provided:

- For water curtains, use the availability, reliability, and effectiveness approach discussed in Appendix P, Detection and Suppression.
- In using the above-presented ‘generic’ barrier failure probabilities, the analyst should verify that there are no plant-specific barrier problems identified by the plant fire protection staff.

Table 11-3
Barrier Types and Their Failure Probabilities

Barrier Type	Barrier Failure Probability/Demand
Type 1 - fire, security, and water tight doors	7.4E-03
Type 2 - fire and ventilation dampers	2.7E-03
Type 3 - penetration seals, fire walls	1.2E-03

11.5.2.1.5 Step 5.c: Fourth Screening – CDF Based

Those scenarios that survive the preceding screening steps may be screened based on their CDF. The CCDP associated with the failure of all fire PRA components and cables present in the combination of exposing and exposed compartments should be estimated. Using the scenario frequency calculated in the preceding step, a conservative estimate of the CDF can be obtained.

11.5.2.1.6 Step 6.c: Detailed Analysis

Those scenarios that do no screen out in the preceding steps may be analyzed using the same methods for single compartments. The same set of steps may be followed. In this case, the target set should include items from the exposed compartments.

11.5.2.1.7 Step 7.b: Document Analysis Results

Similar to Steps 11.a and 12.b, the final step of multicompartment fire analysis is to document the analysis results. In this case, it is important that the screening process be presented properly. It is recommended that the exposing and exposed compartments matrix to be clearly presented and the screening decisions presented based on that matrix. If detailed analysis is conducted, the same approach should be employed as in the case of single compartment fire modeling.

11.6 Uncertainty

Uncertainties in fire modeling may be due to the following.

- Fire characterization and modeling can introduce significant uncertainty in the Fire PRA analysis. This uncertainty will be treated in an explicit manner.
- The analysis will not be based on point estimates of fire intensity. Rather, the analysis will consider a range of fire conditions and will, within limits of plausibility, identify and consider limiting fire scenarios; i.e., fire scenario conditions that can damage one or more identified PRA targets.

11.7 References

11.1 *Fire Events Database and Generic Ignition Frequency Model for U.S. Nuclear Power Plants.* EPRI, TR-1003111.

11.2 Chavez, J.M. An Experimental Investigation of Internally Ignited Fires in Nuclear Power Plant Control Cabinets: Parts 1 & 2. NUREG-4527.

11.3 "Perspective Gained From the Individual Plant Examination of External Events (IPEEE) Program", NUREG-1742, April 2002.

11.4 Recommended Procedures for the Simplified External Event Risk Analyses for NUREG 1150, Albuquerque NM: NUREG/CR-4840, Sandia National Laboratories, September 1989.

12
POST-FIRE HUMAN RELIABILITY ANALYSIS (TASK 12)

12.1 Purpose

This document describes the procedure for evaluating the impact of fire scenarios on the human actions addressed in the base PRA study (i.e., the Internal Events PRA or original Fire IPEEE analysis) used to create the Fire PRA model, as well as how to identify and quantify new actions to be performed as part of the plant fire mitigation plans and procedures. Evaluating the reliability for these human actions supports the Fire PRA plant model for calculating such metrics as CDF, CCDP, LERF, and CLERP for fire-initiating events. The initial quantification of these metrics makes use of screening probabilities for human failure events (HFEs) where appropriate. As necessary, more detailed best estimate analyses of some human actions will be needed to obtain more realistic assessments of fire risk.

12.2 Scope

Task 12 addresses a process for performing both screening and detailed analysis of human actions identified in accident sequences initiated by a fire. The main focus is to foster the process for assessing the impact of location-specific fires on the human actions taken in response to an initiating event, thus preventing core damage and mitigate releases. This task procedure covers three essential elements of most human reliability analysis (HRA) studies.

- Identification of the HFEs to be included in the Fire PRA.
- The assignment of screening human error probabilities for the identified HFEs to assist in focusing the modeling and fire risk analysis to those scenarios and human actions most important to the overall risk results.
- Considerations for the detailed best-estimate quantification of the more important HFEs to properly consider the fire effects on human performance.

In covering the above scope, it is important to stress that this procedure focuses on those unique fire considerations that need to be included in performing a HRA for the Fire PRA using whatever method (e.g., ASEP [12.1], etc.) is chosen by the analyst. It is therefore equally important to stress what this procedure does not do. This procedure is not a handbook or a similar stand-alone manual for doing a Fire HRA, in that it does not attempt to duplicate all the typical activities in carrying out a HRA like that illustrated by the ASME Standard ASME-RA-S-2002 [12.2]. Nor does this procedure attempt to provide a new or particularly prescriptive method for assessing the HEPs in a Fire PRA, since introducing such a method would be a research project far beyond the intended boundaries and resources for producing these fire procedures. Use of this procedure and the unique fire-related considerations that it covers is expected to be used *in concert with* already-available HRA techniques and calculation tools by an experienced HRA analyst(s) to perform a defensible and realistic HRA for a Fire PRA.

12.3 Background Information

12.3.1 General Task Objectives and Approach

This task's primary purpose is to provide a process on how to include and quantify events representing human failures in the development of the Fire PRA model.

In this task, the Internal Events HFEs are addressed to incorporate fire location scenario-induced changes in assumptions, modeling structure, and performance shaping factors. In addition, modifications to the models are made to address special actions to maintain acceptable plant configurations and safe shutdown given a fire in specific locations and the need to use procedures that are not modeled in the Internal Events PRA.

The procedure for implementing this task is based on three major steps typical of most HRAs:

1. Identifying the human actions and resulting HFEs to include in the Fire PRA, which necessitates the potential modification of existing Internal Events PRA HFEs, as well as adding new HFEs related specifically to fire scenarios.
2. Assigning screening HEPs as an aid in simplifying the Fire PRA model and focusing analysis resources on those fire scenarios and associated equipment failures and operator actions most significant to the overall fire risk.
3. Providing detailed best estimate quantification of the more significant HEPs to overall fire risk.

In addition, documenting the HRA, as well as a discussion about uncertainties, is briefly addressed.

12.3.2 Assumptions

The work performed under this procedure inherently assumes the following.

1. In general, a fire anywhere in the plant introduces new accident contextual factors and potential dependencies among the human actions beyond those typically treated in the Internal Events PRA that increase (mildly or significantly) the potential for unsafe actions during an accident sequence. These will be addressed in the procedure and include, for instance, potential adverse environments (e.g., heat, smoke), possible accessibility and operability issues, use of fire procedures, potential spurious events associated with both diagnostic and mitigating equipment, and increased demands on staffing and their workload, among others.
2. For all fires modeled in the Fire PRA, the crew is aware of:
    - the fire location within a short time (i.e., within the first ~10 minutes of a significant indication of non-normal conditions such as fire alarms, multiple equipment alarms, an automatic trip, etc.),
    - the need for a plant trip (if it has not happened automatically),
    - the need to implement a fire brigade, and
    - the potential for unusual plant behavior as a result of the fire.

3. Even if one or more MCR persons are used to assist in ex-control room activities such as aiding the fire brigade, the minimum allowable number of operators remains available in the MCR to manage the safe shutdown of the plant, and the crew makeup is similar to that assumed in the Internal Events PRA.

12.4 Task Interfaces

12.4.1 Input From Other Tasks

This task provides input to and uses results from many of the other tasks in the fire analysis process. Many of these interactions will be iterative in nature; each iteration provides insights that will improve the implementation of this and the other tasks. In particular:

- Task 2, Fire PRA Component Selection, will identify scenario mitigating equipment and diagnostic indications of particular relevance to human actions modeled in the Fire PRA, and this task (Task 12) will identify human actions to include in the model that, in turn, may imply other equipment and indications that need to be added as part of Task 2. Note that these equipment and indications will involve (1) that needed for potential success of actions that are needed per the EOPs, FEPs, or similar fire response instructions, and (2) that whose failure (including spurious events) in a fire can either induce operators to isolate or reposition critical equipment into a less desirable position or add to the crew's workload and potential confusion.
- Task 5, Fire-Induced Risk Model, will provide human actions already in the Internal Events PRA for consideration of further treatment, per this task, in the Fire PRA. This task (Task 12) will, in turn, identify new actions to be added to the Fire PRA model (Task 5) because of the implementation of FEPs or other fire response instructions.[1]
- Task 12 will provide screening human error probabilities (HEPs) that can be used in performing the quantitative screening per Task 7, Quantitative Screening. Task 7 will provide feedback to Task 12 (based on the accident sequences or cutsets and accompanying CCDPs and other results from running the Fire PRA model) as to those HFEs needing a more detailed best estimate analysis to obtain more realistic CDFs, etc.
- Knowledge from Tasks 3 (Fire PRA Cable Selection), 9 (Detailed Circuit Failure Analysis), and 10 (Circuit Failure Mode Likelihood Analysis) associated with cable and circuit analyses will prove useful in determining the potential for equipment failures, as well as spurious operations and indications that the operators may face various fires. This information will establish which screening HEPs can be used as well as the best-estimate quantification of the more important HEPs. As part of the iterative nature of PRA, in some cases, it will be desirable to perform some of the more detailed tasks (i.e., Tasks 9 and 10) as input to Task 12 so as to establish the best screening HEPs to carry out Task 7 most efficiently.

[1] This can be accomplished through interactions between the HRA analyst and the PRA/systems analysts after studying special fire procedures needed for a location-scenario.

- Knowledge from Task 8, Scoping Fire Modeling, and Task 11, Detailed Fire Modeling, will prove useful in determining aspects important to deciding what screening HEPs can be used, as well as the best-estimate quantification of the more important HEPs. For example, the potential for adverse environments and timing information relative to equipment damage comes from insights from these two tasks. As part of the iterative nature of PRA, in some cases, it will be desirable to perform portions of Tasks 8 or 11 as input to Task 12 so as to establish the best screening HEPs to carry out Task 7 most efficiently.
- Ultimately, the final products of Task 12, including the HFEs to be modeled, some screening HEPs, and best-estimate quantification of certain HEPs, are inputs into the final risk quantification performed under Task 14, Fire Risk Quantification.

12.4.2 Additional Plant Information Needed to Support this Task

The following will be useful in performing this task.

1. Plant Procedures (EOPs, ARPs, Fire Procedures, etc.),
2. Plant training documents and related information (particularly fire-related),
3. Fire PRA Database,
4. Internal Events PRA Model and adjustments thereto per other tasks,
5. Plant P&IDs and Electrical Diagrams as may be necessary to identify the system impacts of human action successes and failures,
6. Other plant drawings and documents, as necessary, and
7. ASME Standard for Probabilistic Risk Assessment for Nuclear Power Plant Applications (ASME RA-S-2002) [12.2].

12.4.3 Walkdowns

Most likely, existing documentation will be adequate to perform this procedure. Thus, walkdowns will generally not be necessary for this task. However, there may be times when a walkdown is needed to determine or verify certain information relevant to the modeled human actions, such as when addressing the performance-shaping factors like the environmental conditions, the conditions of the man-machine interface and equipment layout, etc. In such cases, this need for a walkdown should be planned to coincide with other task walkdowns for efficiency reasons. See Support Task A, *Plant Walkdowns*.

12.4.4 Outputs to Other Tasks

Information from Task 12 is used in the following ways:

- As noted above, Task 12 provides information needed in Tasks 2, 5, and 7, as well as final inputs for Task 14.
- Uncertainty information to be propagated or otherwise addressed as part of Task 15, Uncertainty and Sensitivity Analysis, comes from Task 12.
- Elements of the documentation task (Task 16–Fire PRA Documentation) will include the assumptions, judgments, analyses, and results from Task 12.

12.5 Procedure – Preparation of Postfire HRA Package

12.5.1 Step 1: Modifying and Adding Human Failure Events to the Model

This step involves the identification of the HFEs that need to be included in the Fire PRA model.

12.5.1.1 Review Existing Internal Events HFEs

Identifying the needed HFEs will involve reviewing the appropriateness of HFEs already in the Internal Events PRA. This is done by examining EOPs, abnormal event/operating procedures (AEPs/AOPs), FEPs, alarm/annunciator response procedures, associated training material (particularly fire-related), etc., to determine the relevancy of the HFEs already in the Internal Events model. Since most of the internal events human failures are associated with either preinitiator failures or postinitiator actions important for safe shutdown, regardless of the type of event (e.g., failure to use feed and bleed, failure to depressurize, etc.), they will remain relevant to the Fire PRA and, thus, remain in the model. Some existing HFEs may need modification due to the addition of the fire context, such as if the timing of a scenario could be considerably different or a different procedure is used so that the internal events HFE needs to be altered.

12.5.1.2 Add New HFEs

As mentioned in Section 12.4.1 concerning interactions with Task 2, a number of new human actions and associated HFEs will likely be identified because of the fire-specific procedures and related training. Identifying these new actions will primarily come from a review of these fire-related procedures. For example, because of a fire and the associated procedures, sometimes the operators may have to (1) clear a fire-induced ground fault by isolating a bus, (2) deenergize and energize certain buses and/or loads by operating breakers, or (3) shift control of the plant from the MCR to the safe shutdown panel or other areas used for ex-Control Room shutdown. Particular attention should be made to preemptive actions that are sometimes taken per the fire procedures to prevent spurious actuations of equipment and to protect safe shutdown equipment due to inadequacies in meeting Appendix R of 10 CFR Part 50 (item III.G.2). Including such actions and the corresponding HFEs in the model could lead to different accident sequence developments for possible success and failure paths.

Furthermore, new HFEs will likely be identified because fire-induced failures of equipment and/or instrumentation, including SO/indication, could cause the operators to fail fire-related actions or to take actions that adversely affect safe shutdown (e.g., shutting down an operable pump as directed by procedure because of a spurious/faulty high motor temperature alarm/indication). These new HFEs will need to be postulated and defined as appropriate for the model, considering the impact of the HFEs consistent with the structure and level of detail in the model (e.g., does the HFE affect an entire function, system, specific component only, etc.).

12.5.1.3 Elements of the Identification Process

Whatever process is used to conduct these reviews and identify the HFEs to be modeled (it is assumed the analyst will use a process similar to that for the Internal Events PRA), it should include the elements listed below. Note that additional aids in identifying HFEs may include, for instance, the HLR-HR-E and HLR-HR-F requirements of the ASME Standard (ASME RA-S-2002) [12.2], the ATHEANA HRA method [12.3] that describes a search process for identifying important actions to include in PRA models, and the SHARP1 methodology [12.4]. Both the HRA and PRA analysts should work together on deciding the best way to define and implement each HFE into the Fire PRA model. As part of this effort, the Task 5 procedure should be reviewed for an example model of how to specifically add new model actions based on procedures other than the traditional EOPs (i.e., the operators need to use FEPs or similar instructions).

For postinitiator actions:

1. Develop a description of the typical expected steps that operators take in response to a fire in specific compartments, including the specific procedure references.
2. Compare fire response actions to the base case actions used to model operator responses in supporting the safety functions modeled in the Internal Events PRA. Note what new actions need to be included in the Fire PRA or when modifications to Internal Events PRA modeled actions are necessary. Include HFEs for these actions in the model.
3. If available, consider fire-specific training, including simulator training or actual experience (e.g., fire school) to ensure the correct operator actions during fires so that appropriate HFEs are identified.
4. Understand the role of each crewmember during the fire scenario, how they will be communicating and interacting with one another, and how the various procedures will be implemented. This information is important for both MCR and local actions, and will be needed for the screening step (Step 2).
5. Identify any fire-specific informal rules that may be part of crew knowledge to support development of specific responses (e.g., “don’t put water on electrical fires until power is disconnected”). These may be sources of possible new HFEs or considerations in the modifications to any existing internal events HFEs.

For preinitiator actions:[2]

1. Verify that operators maintain adequate system separation for the safe shutdown systems during test, maintenance, and repair activities, and that this is addressed in the modeling process. HFEs covering failure to do so may need to be included in the Fire PRA and could be a statistical model based on inspection reports or other inputs. This should indicate the conditions under which separation of the selected trains may not be maintained according to

[2] Preinitiator actions are typically addressed by assumptions made about hardware in previous tasks (e.g., Task 7) or in the PRA study. This is an opportunity to verify that errors in preinitiator actions unique to fires have been addressed and to decide whether such errors could affect crew performance.

10 CFR 50 Appendix R of 10 CFR Part 50.[3] Lack of adequate system separation may then need to be modeled in the Fire PRA as a preinitiator-induced dependency between redundant trains.

2. Verify that steps used to inspect and maintain fire barriers and fire doors are considered. HFEs covering failure to do so can be addressed with either a statistical model or HRA evaluations, and modeled in the Fire PRA accordingly.
3. Verify testing used to maintain fire indication systems that cue Control Room operators to locate and plan the response. HFEs covering failure to do so, if deemed potentially important, can be addressed in the Fire PRA with either a statistical model or a system reliability model with HRA evaluations. Note that this could cause a violation of the second Assumption under Section 12.3.2 and could therefore add new model scenarios with an initially delayed response to the fire.
4. Verify testing used to maintain automatic fire suppression systems and manual suppression equipment. If it is decided that a preinitiator error that could disable all or part of the suppression equipment could be important, this should be considered in Tasks 8 and 11 as appropriate.
5. Verify procedures for the controlled use of flammable materials used during maintenance (assessed as part of Task 6). If it is decided that a preinitiator error that could affect the location of combustibles is important, this should be considered in Tasks 6, 8, or 11, as appropriate.

Potential failures of the first three preinitiator actions should be included in the Fire PRA if deemed potentially important so that their impact on the ability of the MCR crew to reach safe shutdown is addressed when evaluating the relevant accident sequences in the model. It is also important to recognize that the effects of these preinitiator errors can change the context of a fire scenario and similarly affect the postinitiator human action evaluations. For example, a fire in a compartment with a preinitiator error of "leaving a fire door open" could allow a fire to grow more easily and involve another compartment, thereby changing the scenario, as well as the potential damage to equipment, and the subsequent postinitiator actions (and probabilities).

12.5.2 Step 2: Assigning Quantitative Screening Human Error Probabilities

A quantitative screening analysis of HFEs will, in part, allow the Fire PRA to focus on the important accident scenarios (simultaneously using other screening based on the circuit analysis and fire frequency/severity perspectives would also be useful). Described below is a method for assigning quantitative screening values to the HFEs modeled in the Fire PRA when performing Task 7, Quantitative Screening, and subsequent model refinement activities. Note, however, that because of the unique conditions created by fires, some level of analysis will be needed to determine which screening "set," below, is applicable. If the needed analysis seems too demanding, analysts always have the option to initially assign screening failure probabilities of 1.0 to all HFEs.

[3] Multiple zone fire assessments address impacts of separation and known connections between safe shutdown trains and the potential loss of multiple safe shutdown trains in the same fire scenario.

The method supports assignment of screening values by addressing the conditions that can influence crew performance during fires, ensuring that the time available to perform the necessary action is appropriately considered (given the other activities ongoing in the accident sequence), and ensuring that potential dependencies among HFEs modeled in a given accident sequence are addressed. Note that the criteria are best applied on a fire scenario (or groups of similar scenarios) basis, in order to decide which criteria set applies for which fire(s). For a particular HFE(s), if an appropriate set of criteria (discussed below) cannot be identified or met, no screening value should be used (i.e., assign a 1.0 failure probability initially and/or do a more detailed analysis depending on whether the HFE becomes important after initial model quantification).

12.5.3 Method for Assigning Screening Values to HFEs (Sets 1, 2, 3, and 4)

In the first set of criteria described below (Set 1), the goal is to determine whether the fire conditions are such that the HFEs modeled in the Internal Events PRA can simply be assigned the Internal Events PRA values modified for general fire effects during screening. Hence, Set 1 criteria apply to only preexisting HFEs in the Internal Events PRA. If the criteria can be met, analysts still need to ensure that potential dependencies across HFEs in the models are accounted for per the ASME Standard (ASME RA-S-2002) [12.2]. That is, that the fire effects and the addition of any new fire-related HFEs to the model do not significantly alter the dependencies among the internal events HFEs and their associated HEPs.

Set 2 addresses a special case for HFEs modeled in related scenarios in the Internal Events PRA, but that did not meet the Set 1 criteria. Set 3 addresses (1) new HFEs added to the Fire PRA to account for fire-specific effects, and (2) prior Internal Events PRA HFEs that had to be significantly altered/modified during Step 1 to reflect fire effects in the Fire PRA. Set 4 addresses actions involved with MCR abandonment and the abandonment decision. Each of the four sets of screening criteria and HEP screening values is presented in turn below.

12.5.3.1 Screening Values Under Set 1

Given that the criteria for Set 1 exist, the Internal Events PRA probability values for the applicable HFE(s), multiplied by a factor of 10 to account for effects not covered in the Internal Events HEP evaluation (such as fire brigade interaction and other minor increased workload and/or distraction issues), can be used as screening values for initial evaluations of the Fire PRA model in Task 7 and beyond.

12.5.3.2 Set 1 Criteria

1. The fire can cause an automatic plant trip, or a forced and proceduralized manual trip, and could not cause significant damage to functional safe shutdown equipment or related instrumentation beyond that considered in the Internal Events PRA for which the HFE value(s) apply. This condition demonstrates that from the safe shutdown perspective, the challenge of the particular fire is not significantly worse (functionally or as to effects on equipment) than already considered in the Internal Events PRA for the applicable HFE(s).

2. Based on input from the cable/circuit analysis, no spurious behavior of instrumentation (e.g., false or lost indications) or spurious equipment actuations can occur in this fire beyond those with the following general characteristics. (1) The spurious events are not associated with safety-related equipment and instrumentation relevant to the critical safety functions, and hence will be only minor distractions, not immediate challenges to safe shutdown. (2) The operators can discern the events to be clearly attributable to the fire. (3) The events do not need immediate responses or corrective actions from the crew (e.g., to prevent damage to critical safety function equipment or damage to the core) while attempting to achieve safe shutdown.
3. One train/division of safe shutdown, related equipment and instrumentation is completely free of any spurious events or failures directly associated with the fire, allowing the crew to maintain the critical functions and reach safe shutdown per the EOPs (e.g., heat removal, RCS inventory, etc.).
4. Those members of the MCR crew most directly responsible for achieving and maintaining safe shutdown (i.e., the board operators responsible for controlling and monitoring plant status and the crew supervisor responsible for reading the procedures and directing crew actions, etc.) will not have significant additional responsibilities. That is, they will be able to remain in the EOPs (as when responding to an internal event) or, if they are to follow FEPs, those FEPs *closely* resemble the EOP actions (so that the Internal Events PRA HFEs can still be deemed relevant for their definition and quantification). One way to demonstrate this, for instance, would be if someone else is responsible for dealing with the fire-specific response procedures and the actions associated with those procedures do not significantly disrupt the above MCR members' responsibilities and actions related to reaching safe shutdown. The fire-specific actions also should not divert personnel normally needed to assist the MCR crew in reaching safe shutdown.
5. There is no significant environmental impact or threat to the MCR crew (e.g., no significant smoke, potential toxic gases, loss of lighting if not already part of the Internal Events PRA HFE, such as for station blackout, etc.).
6. There is no reason to suspect that the time available to diagnose and implement the action(s) being addressed would be significantly different than in the Internal Events PRA-related scenario(s) for which the HFE(s) apply.
7. A dependency assessment of the applicable HFEs in the Internal Events PRA has been performed per the ASME Standard [12.2] to ensure that the dependencies are accounted for in the Fire PRA. Potential dependencies created either by the fire effects or the associated introduction of new HFEs into the model need to also be addressed. If new HFEs related to the fire have been added to the model, these new actions should be shown to not create new dependencies among the HFEs in the accident sequence and that any likely strong dependencies have been accounted for during the screening, so that accident sequences/cut sets are not artificially removed because of multiplying many supposedly independent HEPs together.
8. If any of the HFEs being modeled are local ex-CR actions that were originally modeled in relevant accident sequences in the Internal Events PRA, it should be shown that achieving the local actions will not be significantly affected by the presence of fire from an environment and accessibility perspective (e.g., no significant interference from smoke or toxic gases either in traveling to the location of the action or in executing that action; no loss

of lighting; no new high radiation threat; etc.). It should also be demonstrated that the staff assumed to conduct the action will still be available, i.e., they will not be conducting other fire-related responses such as isolating electrical equipment or supporting the fire brigade, etc. Furthermore, other conditions assumed in evaluating the corresponding Internal Events PRA local action (i.e., need for special tools, communication capability, adequacy of procedures and training) should not be significantly different under fire conditions. (Note: If SCBAs are needed to carry out the local action, these Set 1 criteria are not met for that action).

If all of the conditions for Set 1 are met, the Internal Events PRA HEPs for the applicable HFE(s), multiplied by a factor of 10 to account for the effects of potential fire brigade interaction and other minor increased workload and/or distraction issues, can be used as screening values for initial evaluations of the Fire PRA model in Task 7 and beyond.

12.5.3.3 Screening Values Under Set 2

This set addresses a special case where the Set 1 criteria related to spurious events are not met, but a reasonable screening value can still be applied. The Set 2 criteria still apply only to HFEs that were previously modeled in the Internal Events PRA. If the Set 2 criteria are met, screening values of 0.1 or 10 times the Internal Events PRA values, *whichever is greater*, can be used, but potential dependencies across events in a scenario need to be examined (as discussed under Set 1) and the total joint probability of the HFEs in the scenario should be reasonable, as outlined by the ASME Standard [12.2].

12.5.3.4 Set 2 Criteria

If all of the Set 1 conditions are met except significant spurious electrical effects are likely occurring in one safety-related train/division (and one train/division only) of equipment and/or instrumentation important to the critical safety functions, and hence may need some corrective responses on the part of the crew, the HFEs from similar scenarios modeled in the Internal Events PRA may be assigned a Set 2 screening value as long as appropriate dependencies are considered. The point of this Set 2 condition is that in Set 1, the spurious effects are not in safety-related, critical function-related equipment, and do not need any immediate response from the crew. In Set 2, the crew might have to attend and respond to the spurious activity in the affected train/division to make sure it does not affect their ability to reach safe shutdown (e.g., causing a diversion of all injection). However, the crew would likely detect the spurious activity quickly and not be confused by it. They would still have at least one train/division of safe shutdown equipment unaffected, and they would still be likely to conduct the safe shutdown actions as indicated by the procedures without significant delays.

12.5.3.5 Screening Values Under Set 3

These criteria address (1) new HFEs added to the Fire PRA or (2) prior Internal Events PRA HFEs needed to be significantly altered or modified in Step 1 of this procedure because of fire conditions. In such cases, preexisting Internal Events PRA HEPs either do not exist, or are not appropriate as a basis for the Fire PRA. Depending on the criteria, a screening value of either 1.0 or 0.1 may be used.

12.5.3.6 Set 3 Criteria

1. If the action being considered is either a MCR or local (ex-CR) action and it is to be performed within approximately 1 hour of the fire's initiation, set the HEP to 1.0 for screening. The 1-hour limit is both a reasonable limit for early response actions that will most likely be (or need to be) completed, as well as a time beyond which most plants can have additional personnel and any technical support group available at the plant site.
2. If the action is not necessary within the first hour, the fire can be assumed to be out and thus not continuing to cause delayed spurious activity and other late-scenario complicating disturbances, and that there is plenty of time available to diagnose and execute the action, set the HEP to 0.1 for screening. The analyst still needs to ensure that potential dependencies across HFEs in the models and the joint probabilities of multiple HFEs are accounted for per the ASME Standard (ASME RA-S-2002 [12.2]). That is, that the fire effects and the inclusion of the new actions in the model do not create significant new dependencies among the HFEs (new and old) in the model. If unaccounted-for dependencies are likely to exist, a 1.0 screening value should be used, or dependencies accounted for in some other way as part of the quantification.

12.5.3.7 Screening Values Under Set 4

This criterion addresses HFEs associated with the decision to abandon the MCR and all subsequent actions in reaching safe shutdown. Because of (1) the unique nature of the decision to abandon the MCR, (2) the wide variability on how and where plants implement safe shutdown when the MCR is abandoned, and (3) it is unlikely that it would be possible to screen such actions anyway, unless the applicable fire initiating frequencies are extremely low, a global screening value of 1.0 should be assigned for this entire set of actions. This acknowledges that more detailed analysis will likely be needed for these types of scenarios, and thus screening is not appropriate for these cases.

12.5.3.8 Set 4. Criterion

All HFEs involved in MCR abandonment and reaching safe shutdown from outside the MCR, including HFEs representing the decision to abandon the MCR, should be assigned screening values of 1.0. Detailed analysis is needed either before the screening runs of the fire model or afterward.

12.5.4 Basis for Quantitative Screening Values

It is acknowledged that the above set of screening values do not have a direct empirical basis. The values selected are based mainly on experience with the range of screening values traditionally used and accepted in HRA (e.g., in the HRAs performed for the NRC Individual Plant Examination Program); experience in quantifying HEPs for events in NPP HRAs; experience in applying a range of HRA methods and the values associated with those methods; and experience in performing HRA in Fire PRAs. Admittedly, the screening approach may be conservative for some cases. However, this is necessary to avoid being overly optimistic for potentially important and/or complex scenarios and associated HFEs.

12.5.5 Step 3: Performing Detailed Best-Estimate Analyses of the Important HFEs

After (1) identifying and incorporating the HFEs into the Fire PRA per Step 1, (2) assigning screening values for the HEPs per Step 2, and (3) performing Task 7, Quantitative Screening, and any other subsequent refinements of the model to determine the scenarios and operator actions most important to the fire risk, certain HFEs and their HEPs need to be reevaluated for their best-estimate values to obtain a more realistic assessment of fire risk (i.e., the screening HEPs should no longer be used).

There are numerous HRA methods and tools in common use for evaluating and quantifying human actions in a PRA model. While all have their respective strengths and weaknesses, and it is not the purpose of this procedure to direct the use of any particular approach, none provide explicit instructions for how to incorporate the effects of fire-related conditions on human performance. Yet, to adequately defend the final best-estimate HEPs in the fire model, the analysts need to account for these fire effects in deriving these best-estimate HEPs for the Fire PRA. This step covers effects that are to be considered in the best-estimate evaluations. How these effects are explicitly accounted for is up to the analysts, thus providing as much flexibility as possible in implementing the HRA for the Fire PRA. For example, it may be desirable to use an expert elicitation approach because of the flexibility to treat additional effects not explicitly handled in methods with an established list of performance-shaping factors[4]. It may, instead, be desirable to use a method with a prescribed list of performance shaping factors (PSFs) but in a way that reasonably accounts for the fire effects, as discussed below. However, it is done, the analysts should demonstrate how these fire effects have been accounted for when performing these best-estimate analyses.

To perform these analyses, a prerequisite for best-estimate HRA quantification is suggested, but not necessary, that goes beyond the typical HRA team makeup. The participation of an individual or individuals with experience in human behavior in fires (e.g., firefighter trainers, military trainers, or others familiar with how fires might influence crew behavior, etc.) could be helpful to the team during the detailed quantification phase. Individuals with such experience can help analysts make informed judgments about how a fire context might influence a particular set of crew or operator responses. They may help the analysts decide how to translate the fire effects into a factor the tool for quantification "understands" (e.g., workload, stress, complexity), or help identify appropriate adjustments to HEPs given the fire effects.

It is expected that performance of the best-estimate HRA for the Fire PRA will follow the same approach of any HRA as dictated in the ASME Standard [12.2], and that approach is not reproduced here (e.g., we do not discuss, a need to conduct a sanity check at the end to make sure the relative HEPs seem reasonable). This procedure does address unique fire effects that need to be accounted for in the best-estimate evaluations. This is done by discussing a set of PSFs that should be addressed, with particular focus on those fire-related considerations to include when assessing the impact of the PSFs on quantifying the HEPs. Recognize that not all of the PSFs and related considerations will be relevant for all HFEs, and some may be more dominant than others, depending on the specific scenario context and action being analyzed.

[4] For example, see: Forester, J., Bley, D., Cooper, S., Lois, E., Kolaczkowski, A., Siu, N., Wreathall, J. "Expert Elicitation Approach for Performing ATHEANA Quantification," *Reliability Engineering and System Safety*, Vol. 83, No. 2: 202-220, February 2004.

12.5.5.1 PSFs and Fire Effects to Consider

- Available staffing resources – Fire can introduce additional demands for staffing resources beyond what is typically assumed for handling internal events. These demands can take the form of needing to use and coordinate with more personnel to perform certain local (ex-CR) actions, as well as with the fire brigade and/or local fire department personnel. This latter issue will likely necessitate an operator(s) to be physically present with the firefighters, perhaps at the expense of the typical MCR staffing. The time of the fire (an aleatory uncertainty) could change the available staffing so that it needs to be addressed in the analysis (e.g., by explicitly modeling or assuming the worse-case staffing condition). Changes in the necessary/available staffing to achieve safe shutdown during a fire should also be addressed.
- Applicability and suitability of training/experience – The crew familiarity and level of training (e.g., types of scenarios, frequency of training or classroom discussions or simulations, etc.) for addressing the range of possible fires and potential actions to be performed may not be the same as for internal events (e.g., small LOCAs, loss of air). "Less familiarity" may need to be accounted for in assessing the impact of training.
- Suitability of relevant procedures and administrative controls – Depending on the fire, the operators may need to use other procedures or controls than those typically used in response to internal events. This could lead to less familiarity or even confusion with regards to implementing different or multiple procedures simultaneously. In some cases, especially for some ex-CR actions, some procedures might not exist or be readily retrievable, or ambiguous in some situations. Perform checks of the adequacy and availability of these other procedures that would be needed to address the fires modeled in the Fire PRA.
- Availability and clarity of instrumentation (cues to take actions as well as confirm expected plant response) – Fires can introduce multiple spurious events and indications unlike that expected in most internal events analyses. Tasks 2 and 5 specifically address the identification and modeling of spurious events in the Fire PRA. This can add confusion with regard to the true plant status and the subsequent actions for operators to take as they sort out what is false from what is actually happening, as well as the need to address unwanted spurious events (e.g., spurious closing of an injection valve). This sorting out process can, at best, add to the time to perform necessary actions, and, at worst, cause the operators to not take appropriate actions at all or perform procedure-directed actions under the wrong circumstances or at the wrong time (e.g., by procedure, shutdown an otherwise operable pump because of a spurious high-temperature alarm). Consideration should be given to the spurious events and their effects that could happen with each postulated fire and how they may affect subsequent operator performance relative to the HFEs being analyzed.
- Time available and time needed to complete the act, including the impact of concurrent and competing activities – Many of the other PSFs may influence the overall estimate of the time available and needed to complete desirable actions. For example, spurious closure of a valve used in the suction path of many injection paths may need quick detection and response by the crew. Use of less familiar or otherwise different procedure steps and sequencing could change the anticipated timing of actions in response to a fire. Interfacing with the fire brigade may delay performing some actions. The desired actions may be more complex and necessitate an increased workload than for internal events response (e.g., disable an equipment item before repositioning it, as opposed to simply repositioning it during an

internal event). Accessibility issues, harsher environments, the need for other special tools, etc., may also impact the overall timeline of how quickly actions normally addressed in response to internal events can be performed under fire conditions. Furthermore, potential fire growth and suppression could alter equipment failure considerations from those considered for internal events. The timing of important actions needs to be reconsidered with the fire and its effects.

- Environment in which the act needs to be performed – Fires can introduce new environmental considerations not normally experienced in the response to internal events. These include heat, smoke, the use of water or other fire-suppression agents or chemicals, toxic gases, and different radiation exposure or contamination levels. Any or all of these may affect the accomplishment of the desired action.
- Accessibility and operability of equipment to be manipulated – Fires and their effects (e.g., environment) could eliminate or at least delay the ability to take actions otherwise credited for internal events because the location is inaccessible. Additionally, fires can cause failure of equipment used in the desirable action (e.g., irreversible damage) so that it should be considered inoperable, even manually.
- The need for special tools (keys, ladders, hoses, clothing to enter a radiation area, etc.) – Fires may cause the need for special tools or clothing (e.g., breathing gear, protective clothing) not otherwise considered in response to internal events. The accessibility of these tools or clothing needs to be checked so that the desired actions can indeed be performed in a fire situation. Furthermore, the level of familiarity and training on using these special tools needs to be assessed.
- Communications – Necessary communications to carry out the desired actions may or may not be available in some fires. This needs to be checked, as does the level of familiarity and training to use any special communication devices.
- Team/crew dynamics and crew characteristics (degree of independence among individuals; operator attitudes, biases, rules; use of plant status checks; approach for implementing procedures, e.g., aggressive vs. slow and methodical, etc.) – The extent that typical crew dynamics may change as a result of responding to a fire instead of internal events, needs to be considered. For instance, if certain new or unique fire-related responsibilities have to be handled by a crewmember (e.g., interfacing with the fire brigade, directing the use of a FEP), that crewmember may no longer be available to perform the duties s/he usually performs in a plant trip as assumed in the Internal Events PRA. The use of plant status discussions by the crew may be delayed or performed less frequently, allowing less opportunity to recover from previous mistakes. To the extent the way the crew operates is different in a fire as opposed to internal events, these differences need to be accounted for, if significant. Such differences may be best determined by talk-throughs with operations staff, as well as observing simulated responses of fire scenarios.
- Special fitness needs – Should the fire and its effects cause the need to consider actions not previously considered under internal events, or changes to how previously considered actions are performed, checks should be made to ensure unique fitness needs are not introduced.

12.5.5.2 Special Case–MCR Abandonment

For fires that either directly cause an uninhabitable environment in the MCR or otherwise make plant monitoring and control extremely difficult from the MCR, the crew may need to leave the

MCR and achieve safe shutdown wholly or in part from ex-CR locations. For the subsequent actions that need to occur, whether they involve using a remote shutdown panel (with, most likely, minimal controls and indications) or a number of local panels and equipment, all the above PSFs and related fire effects need to be considered when calculating best-estimate HEPs, as with all other HEPs in the model. However, it is likely that many of the PSFs may introduce more serious challenges to operator success, considering potential factors like less available instrumentation and controls; the need for organized involvement of many operators in various locations in the plant, including communications among the personnel; less familiar procedures and training; more time needed to reach the necessary locations and perform activities that in other situations could easily be done in the MCR; etc.

MCR abandonment also involves deciding "if and when" to leave the MCR, as well as new HFEs, such as those involving isolation of MCR circuits, and perhaps more local and even sequentially important actions involving deenergizing and reenergizing equipment. In considering the decision to leave the MCR and performing the necessary subsequent actions, it is particularly important to consider as part of the PSF evaluations:

- the procedural/training approach and explicitness/clarity of the criteria for abandoning the MCR;
- the potential confusion about the need to evacuate the MCR, e.g., because of spurious signals and confusing indications;
- the potential impact of crew reluctance to abandon the MCR;
- the timeliness of the decision and, in particular, what kinds of problems related to reaching safe shutdown could arise because of delays in abandonment (for instance, (1) a conservative assessment may be needed with regard to which actions may or may not have been taken in the Control Room before it is finally abandoned and (2) equipment potentially affected by the fire may have to be considered already failed or otherwise spuriously actuated before the Control Room is abandoned, depending on the expected fire growth and the timing of that growth);
- inappropriate abandonment of the MCR (i.e., incorrectly diagnosing the need to abandon the MCR) which could lead to a failure to reach safe shutdown;
- the general effects of crews no longer having access to all the information in the MCR;
- the number and complexity of the actions;
- the number of different locations to be visited;
- the extent to which multiple actions need to be coordinated or sequentially performed;
- the ability to communicate between different sites;
- the need to wear breathing apparatus or special clothing while performing the actions; and
- the adequacy of the human-machine interface at the remote shutdown and/or local panels.

12.5.5.3 Cases where Little or no Credit Should be Allowed

When performing the best-estimate analyses for the more important HFEs, there are several cases in which credit for human actions should not be given or for which credit should be very limited. These include:

- Tasks needing significant activity and/or communication among individuals while wearing SCBAs. It is believed that communication under such conditions is very difficult, and until proven otherwise, where the levels of smoke, heat, or toxic gases are high enough to necessitate the use of SCBAs, the likelihood of success is assumed to be extremely low. Additionally, performing numerous and strenuous actions wearing SCBAs should also be given little credit for success and at least account for delays in carrying out the actions given the likely visibility and other similar difficulties.
- The fire could cause significant numbers of spurious equipment activations (and/or stops) and affect the reliability of multiple instruments. Actions that are be based on such instruments and equipment should be assumed to fail, unless alternate sources of reliable information can be documented and a basis for using the alternate sources can be strongly supported. The additional time, complexity, availability of procedures, and other relevant PSFs contributing to identifying and using the alternate sources of information should be considered in determining the likelihood of success.
- Actions to be performed in fire areas or actions needing operators or other personnel to travel through fire areas should not be credited. Where alternate routes are possible, the demands associated with identifying such routes and any extra time associated with using the alternate routes should be factored into the analysis.
- Actions needing the use of equipment that could have been damaged such that even manual manipulation may be very difficult or unlikely to succeed (e.g., a hot short on a control cable has caused a valve to close and drive beyond its seat, possibly making it impossible to open, even manually) should not be credited. As typical of PRAs, repair-type recoveries should generally not be credited.
- Actions to be performed without the basic needs of procedure direction, training, special tools (if necessary), or sufficient time should not be credited.

12.5.6 Step 4: Documenting the Post-Fire HRA

The output of this entire task is a calculation package. In concert with the ASME Standard [12.2], this package should contain:

- all human actions and associated HFEs (pre- and post-initiator) considered in the fire analysis,
- the description of the HFE and especially its context in the fire scenarios,
- the quantification method (screening or best-estimate), including the method/tools that were used,
- the basis for the derivation of the HEP with particular attention as to the evaluation of (1) dependency considerations and (2) the PSFs and related fire effects, the assigned HEP uncertainty values and their bases, and
- an assessment of the assumption's sensitivity in the HRA modeling and quantification to the PRA risk measures.

12.6 Uncertainties

This task has the same uncertainties associated with any HRA that may be characterized as including:

- Whether the modeling of the human failure events are sufficiently complete and appropriate for the fire scenarios modeled in the Fire PRA;
- Whether the screening rules and associated screening HEPs have been appropriately applied, are reasonable, and will not allow inadvertent screening out of potentially important HFEs and associated scenarios;
- Whether the detailed best-estimate HRA analyses and subsequent HEPs have properly considered potential dependencies and the important performance-shaping factors, especially considering the unique characteristics of fire-type scenarios, and whether the process used tools that can adequately consider these factors; and
- Whether most methods and tools suggest distributions/error bounds that should be used in the HEP estimates as a means to capture primarily the epistemic uncertainties associated with each HEP, assuming each HFE context is reasonably well-defined.

The process-related uncertainties above are best addressed using technical peer review as well as trial-and-error with regard to whether the screening of HFEs seems reasonable and does not inadvertently screen out scenarios or human actions. The assigned error bounds/uncertainty distributions suggested by the particular HRA method/tool used (or by some other means) should be propagated through the Fire PRA model using typical sampling techniques (e.g., Monte Carlo). Finally, sensitivity studies using the entire Fire PRA model (see Task 15) should be used to demonstrate the robustness of the results and conclusions of the Fire PRA relative to the evaluations made in this task.

12.7 References

12.1 Alan D. Swain, *Accident Sequence Evaluation Program Human Reliability Analysis Procedure*, NUREG/CR-4772, SAND86-1996, Sandia National Laboratories, February 1987.

12.2 *Standard for Probabilistic Risk Assessment For Nuclear Power Plant Applications*, ASME RA-S-2002, American Society of Mechanical Engineers, April 5, 2002 and Addenda ASME RA-Sa-2003, December 5, 2003.

12.3 *Technical Basis and Implementation Guidelines for A Technique for Human Event Analysis (ATHEANA)*, NUREG-1624, Revision 1, U.S. Nuclear Regulatory Commission, May 2000.

12.4 *SHARP1 - A Revised Systematic Human Action Reliability Procedure*, Electric Power Research Institute, December 1990. EPRI NP-7183-SL.

13
SEISMIC-FIRE INTERACTIONS ASSESSMENT (TASK 13)

13.1 Purpose

The Fire Risk Scoping Study [FRSS, NUREG/CR-5088, 1989] identified the following four seismic-fire interaction issues:

1. Seismically induced fires,
2. Degradation of fire suppression systems and features,
3. Spurious actuation of suppression and/or detection systems, and
4. Degradation of manual firefighting effectiveness.

It is recommended that a Fire PRA include a qualitative assessment of these issues. In this procedure, a recommended approach is given.

This procedure does not provide a methodology for developing models and quantifying risk associated with fires caused by a severe seismic event. This is due to a combination of limitations in the state of the art, and the perceived low level of risk from these fires. The low risk is based on the low frequency of an earthquake that can initiate a challenging fire and degrade various plant fire protection defense-in-depth elements, and the general seismic ruggedness of the NPPs as part of their design basis. This procedure outlines a series of steps intended to verify this premise. If the verification steps outlined in this procedure do not preclude the risk significance, either a quantitative assessment or consideration of physical or procedural changes may follow.

13.2 Scope

Consistent with the recommendations of the FRSS and those outlined in the EPRI FIVE and Fire PRA Implementation Guide, recommended practice in the seismic fire interactions assessment utilizes a qualitative, walkdown-based approach, rather than quantitative methods to estimated associated risk.

13.3 Background Information

13.3.1 Seismically Induced Fires

There is a potential that a significant seismic event could trigger fires within or outside the plant. Postearthquake fires in typical urban and industrial settings are most often associated with pipes or storage tanks containing flammable gasses (e.g., natural gas, hydrogen) or liquids (such as gasoline, fuel oil, etc.). However, flammable liquids and gasses are not the only potential fire hazard.

There is also a potential for fires arising from the failure of electrical equipment during an earthquake, even though these fires tend to have significantly less consequence due to the absence of large amount of flammable and/or combustible material. Unrestrained or inadequately restrained electrical equipment may be physically displaced or tip over during a seismic event. This could cause electrical fires through physical damage to, in particular, electrical cables and connections feeding power to the components. Furthermore, firefighting response may also be compromised and/or complicated by the seismic event (as discussed in the context of the other three seismic-fire interaction issues), so that if a fire occurs as the result of an earthquake, it would have a greater potential for long duration than general plant fires.

A survey of over 100 plant and industrial facilities after 18 major earthquakes was conducted by EPRI in 1990 (EPRI NP-6989). The EPRI FPRAIG (TR-105928) reviewed this study and reports that postearthquake fires in such facilities were not common. To date, no incidence of a postearthquake fire impacting a NPP has been documented. Clearly, such events are rare, although no attempts have been made to estimate the likelihood of seismically induced fires in an NPP.

13.3.2 Degradation of Fire Suppression Systems and Features

Elements of the plant fire suppression systems may or may not be designed to withstand the effects of an earthquake. The seismically induced failure of fire suppression system components could lead to general unavailability of one or more fire suppression systems or to the discharge of fire suppressant into an undesired location. The second effect will be discussed in the context of the SO of fire protection systems. This section deals primarily with the potential that fire suppression systems may be unavailable following a seismic event.

As reported in the FRSS (and the FPRAIG), a study by Brookhaven National Laboratory (BNL) concluded that fire suppression systems installed in accordance with nationally recognized codes and standards generally provide an adequate level of support for piping under seismic conditions (BNL/NUREG-25101). The most significant potential vulnerability identified in the BNL study was inadequate lateral constraint that could allow for movement of, and damage to, sprinkler heads, should they impact other nearby objects. The FRSS also identifies inadequate restraint of gaseous suppressant bottles as a potential concern. A final area of concern cited in the FRSS was the use of cast-iron fire mains, given that cast iron is known to be seismically weak.

NRC Regulatory Guide 1.29 recommended the use of seismic category II-over-I design criteria for the installation of fire protection piping and components. Hence, depending on the specific plant design approach, it may be possible to demonstrate a reasonable level of assurance that fire suppression systems will be seismically robust.

In general, seismic design is more likely in areas prone to significant seismic activity. It is also likely that seismic restraints have been provided within the plant in cases where the rupture of the fire suppression system could compromise Class 1E safe shutdown equipment (e.g., the Seismic II/I designs). However, the seismic ruggedness of fire suppression systems should not be assumed without some review of plant-specific design practice.

Depending on where a failure occurs, one or more specific fire suppression systems or features may be compromised. (Systems could include local sprinkler systems, and features could include manual hose stations.) For example, ruptures in the firefighting water main piping system (e.g., the yard main) could render all water-based fire suppression (e.g., sprinklers and manual hose stations) unavailable until repair actions are taken to, e.g., isolate the ruptures. Even given successful isolation of the ruptures, portions of the firefighting water system could remain isolated pending major repairs.

13.3.3 Spurious Actuation of Suppression and/or Detection Systems

In the event of an earthquake, it is possible that one or more of the fixed-fire protection systems (detection and/or suppression) will actuate. It is also possible that fire suppressant may be released in unintended locations due to piping breaks.

Both ionization and photoelectrical smoke detectors are vulnerable to actuation from dust and/or steam. (Incipient smoke detection systems may be relatively robust against such exposure, as they are designed specifically to filter out a potential false signal due to dust or steam.) Heat detectors might also be activated given a substantial steam release. During a seismic event, it is likely that enough dust will be lofted to actuate any vulnerable detector. Steam may also be released in significant quantities given any ruptures to steam lines or piping. Hence, multiple detection signals are possible, if not likely. Sorting out valid from spurious fire detection signals could complicate the postearthquake response. In particular, multiple spurious detection signals could mask valid signals.

Similarly, some fire suppression systems may be vulnerable to spurious operation, including discharge resulting from physical damage to piping and control components.

- Relay chatter in non-seismically qualified fire protection system control panels could result in system actuation.
- A pipe break in a water-based system could cause the release of water in an unintended location and from an unexpected direction. Hence, equipment protected from sprinklers may still be sprayed by water.
- Deluge system trip valves may not be seismically robust and may spuriously open (or jam shut).
- Fusible links in sprinkler heads (and ventilation dampers) may actuate given a steam release.

- Systems tied to smoke detection (including cross-zone smoke detection) may receive actuation signals based on spurious actuation of the detectors.
- Spurious discharge of a gaseous suppression system could render a fire area (or zone) uninhabitable (e.g., CO_2).

In the event of a severe seismic event, multiple SOs or suppressant discharges could lead to potential flooding problems (e.g., water piping breaks), spraying of equipment from unanticipated directions, and/or diversion of suppressants away from actual fires.

13.3.4 Degradation of Manual Firefighting Effectiveness

A severe seismic event could impact plant operations, including actions associated with manual firefighting. As discussed above, there may be one or more actual fires initiated within the plant boundaries; there may be multiple fire detection signals (most of which may be false signals); one or more fire suppression system may discharge (likely leading to additional alarms); and some elements of the fire suppression systems and features may be disabled.

In the postearthquake environment, it will be necessary for plant staff to assess the fire protection situation, in addition to other earthquake response activities. Depending on how the plant fire brigade is staffed, there may be conflicting assignments (e.g., security and maintenance personnel may be called on to perform other duties). If an actual fire does occur, some manual response will be required. Potential actions that may be necessary following a seismic event include the following:

- Respond to fire detection signals and reset detection systems,
- Confirm whether any actual fires exist and execute appropriate attack measures,
- Assess the condition of the fire suppression systems,
- Secure damaged fire suppression systems (e.g., leaking or broken pipes), and
- Ensure required access for safe shutdown response actions.

13.4 Assumptions

No specific assumptions are made in the conduct of this task.

13.5 Task Interfaces

13.5.1 Input from Other Tasks

This task utilizes component and cable mapping information developed in support of the Fire PRA (Support Task B). In particular, the task will ask that, to the extent possible, components and cables credited in postearthquake safe shutdown are mapped to specific fire analysis compartments.

13.5.2 Additional Plant Information Needed to Complete this Task

Information relating to the plant seismic design basis, earthquake response procedures, and any seismic plant response analyses (as available) will be required to complete this task. Seismic plant response analyses of interest may include seismic margins analysis, seismic PRA, seismic IPEEE analysis, or other seismic response analyses, as available.

13.5.3 Walkdowns

The recommended approach is walkdown-based. Participants in the walkdown(s) should include staff knowledgeable of the plant fire protection systems and features; the results of the plant fire risk analysis, including the postulated fire growth and damage scenarios for key fire areas; and the plant's seismic design basis and the assessment of seismic restraints.

13.5.4 Output to Other Tasks

There is no direct output from this task to other tasks beyond documentation of the PRA findings (Task 16).

13.6 Assessment Procedure

The seismic-fire interaction assessment procedure includes the following seven steps.

Step 1: Identify key seismic-fire interaction analysis compartments.

Step 2: Assess potential impact of seismically induced fires.

Step 3: Assess seismic degradation of fire suppression systems and features.

Step 4: Assess the potential impact of spurious fire detection signals.

Step 5: Assess the potential impact of spurious fire suppression system actuations.

Step 6: Assess the potential impact of a seismic event on manual firefighting.

Step 7: Complete documentation.

13.6.1 Step 1: Identify Key Seismic-Fire Interaction Analysis Compartments

- Determine what systems and components are credited for postearthquake safe shutdown. Information (such as SSEL) from plant Seismic Margin Assessment (SMA) or Seismic PRA may be used.
  - Review plant earthquake response procedures and identify key components and systems credited for safe shutdown.

  - Review any supplemental seismic plant response analyses (as available) to further identify components and systems important to postearthquake safe shutdown.
  - Identify any manual actions required to support postearthquake safe shutdown.
- To the extent possible, map the postearthquake safe shutdown systems and components to those circuits and systems credited in the Fire PRA safe shutdown plant response model.
  - Use the Fire PRA cable and component mapping information (developed under Task 3) and other plant cable and component mapping information, as available.
  - Consider additional cable and component routing efforts only if critical post-earthquake safe shutdown functions cannot be mapped to fire analysis compartments with reasonable confidence.
- Identify fire analysis compartments where seismic-fire interactions could be risk important.
  - Identify the fire analysis compartments that house the components and cables credited for post-earthquake safe shutdown.
  - Identify fire analysis compartments where local manual control or repair actions may be needed in response to an earthquake.
  - Identify critical access paths within the plant required to support personnel passage and or access following an earthquake.

13.6.2 Step 2: Assess Seismically Induced Fires

- For each key seismic-fire interaction analysis compartment identified in Step 1, assess whether or not fire ignition sources unique to a seismic event exist. Assess the acceptability/adequacy of existing seismic restraints for electrical equipment, flammable gas piping, and liquid or gaseous fuel storage tanks.
- Assess the potential for seismically induced fires to compromise postearthquake shutdown capability. Fire ignition source screening and analysis tools may be applied to support this assessment. Specifically, an ignition source screened in Task 8 may be excluded from consideration.
- If potentially significant seismically induced fires are identified, i.e., a fire compartment with a possible source and critical targets (from Step 1), consider providing additional protection. Possible measures may include:
  - Additional or upgraded seismic restraints,
  - Additional fire protection for either the exposing fire source or exposed safe shutdown targets (e.g., cables),
  - Enhancement of existing plant response procedures, and
  - Supplemental plant response procedures.

13.6.3 Step 3: Assess Seismic Degradation of Fire Suppression Systems and Features

- Review general plant practice regarding seismic restraints provided for fire suppression systems and components.
- Conduct a walkdown to assess the seismic ruggedness of plant fire protection systems and features.
  - Assess the seismic ruggedness of support items that could lead to a common-cause failure of multiple fire suppression systems. This would include fire pumps, primary firefighting water piping systems, standpipes, and firefighting water storage tanks/basins.
  - Assess the seismic ruggedness of the fire suppression capability for each of the key seismic-fire interaction analysis compartments identified in Step 1.
- Identify potential points of physical vulnerability for fire suppression systems and assess their impact on the availability of fire suppression following an earthquake.
- If potentially vulnerable fire suppression systems are identified in compartment(s) with the potential for significant seismically induced fires (from Step 2), consider measures to address any identified points of physical vulnerability. Possible measures may include:

  Upgrading the seismic ruggedness of key components in the fire suppression system(s),
  - Providing supplemental guidance in existing procedures or new procedures to ensure that the fire suppression capability is assessed and that leaks are secured promptly following a significant earthquake,
  - Providing a capability to isolate piping breaks,
  - Ensuring that there is a seismically robust source of manual firefighting water to key areas of the plant (e.g., seismically robust hose stations and adequate hose supply to reach key fire areas). This includes any backup water supplies that used in the event that local hose stations are compromised by the seismic event.

13.6.4 Step 4: Assess the Potential Impact of Spurious Fire Detection Signals

- Identify fire detection systems that may be vulnerable to spurious actuation during a seismic event.
- Review plant postearthquake response procedures and determine if provisions are made for dealing with multiple fire alarm signals.
- Consider potential enhancements to the existing procedures if such provisions are lacking.

13.6.5 Step 5: Assess the Potential Impact of Spurious Fire Suppression System Actuations

- Identify fire suppression systems for the key seismic-fire interaction analysis compartments identified in Step 1 that may be vulnerable to spurious discharge through actuation of the system, damage to discharge heads, or a rupture in system piping.

- Assess the potential for spurious fire suppressant discharge to compromise components and systems credited for postearthquake safe shutdown (in Step 1).
- If system is vulnerable to seismic actuation in a compartment with systems credited for postearthquake safe shutdown (Step 2), consider potential measures to reduce component vulnerability.

13.6.6 Step 6: Assess the Potential Impact of a Seismic Event on Manual Firefighting

- For each key seismic-fire interaction analysis compartment identified in Step 1, identify and assess manual firefighting access routes.
  - Identify potential features that could compromise these access routes (e.g., unsecured storage panels that might block an access route following an earthquake, doors that might jam closed following an earthquake, etc.)
  - Determine if alternate access routes are available.
- For each analysis compartment identified in Step 1, identify and assess those assets that may be needed to support manual firefighting.
  - Assess seismic robustness of hose stations.
  - Determine if an alternate source of firefighting water is available if the primary source is compromised.
  - Determine if sufficient length of hose is available to support use of an alternate firefighting water source.
  - Assess the seismic ruggedness of prestaged firefighting equipment storage (e.g., turnout gear storage racks, portable fire extinguishing equipment storage racks, fire fighting equipment "cages," etc.).
- Review and assess plant seismic event response procedures for relevance to manual fire fighting activities.
- If the above examination leads to the conclusion that the ability of the fire brigade to perform in the event of a severe earthquake may be compromised, consider potential upgrades to enhance the seismic robustness of the post-earthquake manual firefighting capability.

13.6.7 Step 7: Complete Documentation

Document the results of the seismic-fire interaction assessment consistent with the level of detail afforded other aspects of the analysis.

13.7 Uncertainty

The seismic fire interactions assessment is based on a qualitative approach, and as such, is heavily dependent on expert judgment. However, because no attempt is made to quantify the risk contribution associated with seismic-fire interactions, no specific quantitative or qualitative treatment of analysis uncertainty is recommended.

14
FIRE RISK QUANTIFICATION (TASK 14)

14.1 Purpose

This section describes the procedure for performing fire risk quantification. This procedure provides the user a general method for quantifying the final Fire PRA Model to generate the final fire risk results.

14.2 Scope

This procedure addresses the following major steps for each of the major fire risk quantification tasks.

- Step 1–Quantify Final Fire CDF Model
- Step 2–Quantify Final Fire LERF Model
- Step 3–Conduct Uncertainty Analysis

In this task, the final Fire PRA model is quantified to obtain the final fire risk results. The final CDF and LERF models are quantified for each fire ignition event.

14.3 Task Interfaces

14.3.1 Input From Other Tasks

This task uses the plant response model (risk model) to quantify CDF and LERF. The model is initially developed in Task 5 (Fire Induced Risk Model), and modified in the quantitative screening done in Task 7. This task also requires input from Task 10 (Circuit Failure Mode Likelihood Analysis), Task 11 (Detailed Fire Modeling), and Task 12 (Post-Fire Human Reliability Analysis).

14.3.2 Additional Plant Information Needed to Support this Task

The Internal Events PRA model as modified for the Fire PRA of the NPP facility is needed to support this task. Additional information may be needed from the PRA model as insights are gained from quantifying the fire risk model. The Fire PRA analysts should also have access to the software tools required to quantify the PRA Model. Access to the ASME Standard for Probabilistic Risk Assessment for Nuclear Power Plant Applications (ASME RA-S-2002) [14.1] may be beneficial, as well.

14.3.3 Walkdowns

No walkdown is required to support this task.

14.4 Background Information

14.4.1 General Task Objectives and Approach

This task provides a general approach for quantifying the Fire PRA Model and generate the final fire risk results. There are at least two different PRA methodologies and a number of different PRA software products available in the industry market. The approach described in this procedure is based on standard state-of-the-art PRA practices and is intended for any PRA methodology or software product. This procedure allows the user to quantify CDF and LERF or CCDP and CLERP. The only difference is that the quantified values of the fire scenario frequencies are used for CDF and LERF calculations, while the fire scenario frequencies are set to 1.0 or TRUE for CCDP and CLERP calculations.

14.4.2 Assumptions

This procedure assumes that the Fire PRA analyst is familiar with the PRA methodology and software employed at the NPP facility. The analyst should also be familiar with the procedures for quantifying the PRA Model. The analyst should be familiar with the ASME Standard for Probabilistic Risk Assessment for Nuclear Power Plant Applications (ASME RA-S-2002) [14.1] and should use the approach therein covering Sections 4.5.8 (for HLR-QU-A, B, C, D) and 4.5.9 (for HLR-LE-A, B, C, D, E, and F1) when quantifying the Fire PRA Model following the steps below.

14.4.3 Outputs to Other Tasks

This is the final task of the Fire PRA quantification process. The output of this task is used in Task 16 (Fire PRA Documentation). Note that Task 15 (Uncertainty Analysis) is addressed during preceding tasks and this task as well.

14.5 Procedure

The section describes the detailed procedure for performing the fire risk quantification. With the exception of fire-specific elements of the quantification, this procedure relies heavily on the approach provided in the ASME PRA Standard [14.1]. The Fire PRA Model developed in previous tasks is used to quantify CDF and LERF frequencies for each fire ignition event.

14.5.1 Step 1: Quantify Final Fire CDF Model

In this step, the Final Fire PRA Model developed in previous tasks is used to quantify CDF frequencies for each fire scenario identified in Task 11. With the exception of fire-specific issues

addressed in this procedure, the approach provided in the ASME PRA Standard should be used to implement the quantification process. The final Fire PRA model, the HRA values provided in Task 12 (including any insights from the HRA dependency analysis), and the fire scenario frequencies developed in Task 11 are used to quantify CDF frequencies for each fire ignition event. The CCDP probabilities can be quantified by setting the fire scenario frequencies to 1.0. The fire scenario frequencies are combined with the appropriate CCDP values to quantify CDF frequencies.

Alternatively, the fire scenario frequencies and the HRA values (including any insights from the HRA dependency analysis) may be incorporated into the final Fire PRA Model. For this option, CDF frequencies may be calculated directly. Calculation of fire-induced CCDP probabilities will not be necessary and Step 1.1 can be skipped.

14.5.1.1 Step 1.1: Quantify Final Fire CCDP Model

In this step, the final Fire PRA Model and the HRA values provided in Task 12 (including any insights from the HRA dependency analysis) are used to quantify CCDP probabilities for each fire scenario identified in Task 11. The mean values of the epistemic distributions should be used for all the variables for which uncertainties are quantified. The fire scenario frequencies are set to 1.0 during the quantification of CCDP probabilities. With the exception of fire-specific procedures, the approach provided in the ASME PRA Standard [14.1] should be used to quantify CCDP probabilities.

14.5.1.2 Step 1.2: Quantify Final Fire CDF Frequencies

In this step, the fire scenario frequencies provided in Task 11 are combined with the appropriate CCDP probabilities to quantify CDF frequencies for each fire scenario. If the fire scenario frequencies and the HRA values were incorporated into the final Fire PRA Model, CDF frequencies may be calculated directly. Similar to the preceding substep, the mean values of the scenario frequencies should be used.

14.5.1.3 Step 1.3: Identify Main Contributors to the Fire CDF

Using the results of the preceding steps, the analysts may organize the minimal cut sets in terms of largest contribution to the CDF. The results can be organized in different ways to provide insights about fire risk. The cut sets can be organized by fire scenarios, by compartments where fire ignition occurs, by plant damage states, post-fire operator actions, etc.

14.5.2 Step 2: Quantify Final Fire LERF Model

In this step, the Final Fire PRA Model developed in previous tasks is used to quantify LERF frequencies for each fire scenario. With the exception of fire-specific procedures, the approach provided in the ASME PRA Standard [14.1] should be used to implement the quantification process. Similar to CDF calculations in the preceding task, the final Fire PRA model, the HRA values provided in Task 12, and the fire scenario frequencies developed in Task 11 are used to quantify LERF frequencies for each fire scenario. The CLERP probabilities can be quantified by setting the fire scenario frequencies to 1.0. The fire scenario frequencies are combined with the appropriate CLERP values to quantify LERF frequencies.

Alternatively, the fire scenario frequencies and the HRA values may be incorporated into the final Fire PRA Model. For this option, LERF frequencies may be calculated directly. Calculation of fire-induced CLERP probabilities will not be necessary and Step 2.1 can be skipped.

14.5.2.1 Step 2.1: Quantify Final Fire CLERP Model

In this step, the final Fire PRA Model and the HRA values provided in Task 12 (including any insights from the HRA dependency analysis) are used to quantify CLERP probabilities for each fire scenario. The mean values of the epistemic distributions should be used with all the variables for which uncertainties are quantified. The fire scenario frequencies are set to 1.0 during the quantification of CLERP probabilities. With the exception of fire-specific procedures, the approach provided in the ASME PRA Standard [14.1] should be used to quantify CLERP probabilities.

14.5.2.2 Step 2.2: Quantify Final Fire LERF Frequencies

In this step, the fire scenario frequencies provided in Task 11 are combined with the appropriate CLERP probabilities to quantify LERF frequencies for each fire scenario. If the fire scenario frequencies and the HRA values were incorporated into the final Fire PRA Model, LERF frequencies may be calculated directly. Similar to the preceding substep, the mean values of the scenario frequencies should be used.

14.5.2.3 Step 2.3: Identify Main Contributors to the Fire LERF

Similar to Step 1.3, using the results of the preceding steps, the analysts may organize the minimal cut sets in terms of largest contribution to LERF. The cut sets can be organized by fire scenarios, compartments where fire ignition occurs, plant damage states, post-fire operator actions, etc.

14.5.3 Step 3: Propagate Uncertainty Distributions

Using the main contributors identified in Steps 1.3 and 2.3, the probability distributions of epistemic uncertainties can be propagated through the CDF and LERF calculations using, for instance, Monte Carlo or Latin hypercube protocols. The final outcome will be probability distributions for CDF and LERF.

In this step, the impact on final results of various uncertainty issues addressed in each task using the approach provided in Task 15 will become apparent. In performing the uncertainty analyses, results may be reported on an individual issue basis (see Task 15) as well as in logical integrated groups, as appropriate. Thus, if two or more issues have a logical connection/interface such that their combined effects should also be noted, it is expected the combined results will be provided along with the individual issue effects. Where advisable, quantitative and qualitative results may be combined and discussed as a group. The analysts are encouraged to provide whatever perspectives are appropriate to make understanding the Fire PRA results more robust and to identify how the results might be different when considering individual as well as logical combinations of uncertainties.

14.5.4 Step 4: Sensitivity Analysis

In this step, the validity of the sensitivity cases identified in Task 15 are verified first, followed by a repeat of CDF and LERF calculations for each case.

14.5.4.1 Step 4.1 Identification of Final Set of Sensitivity Analysis Cases

In Task 15, a set of sensitivity analysis cases is identified. It is recommended that the Fire PRA analysis group meet again to review those cases in light of the insights gained in the preceding steps of this task. A new set of sensitivity analysis cases may result.

14.5.4.2 Step 4.2 CDF and/or LERF Computations and Comparison

Mean CDF and/or LERF values should be computed for each sensitivity analysis case considered in the preceding substep. The results should be compared with the base-case considered in Steps 1 and 2. The comparison would yield insights that may lead to changes in the primary assumptions underlying the Fire PRA analysis.

14.6 Uncertainty

There are no new uncertainties originating from this task. Uncertainties originate from those tasks involving the inputs to the model, as well as the model itself, as discussed in the other tasks.

14.7 References

14.1 *Standard for Probabilistic Risk Assessment for Nuclear Power Plant Applications*, ASME RA-S-2002, April 5, 2002 and Addenda, ASME RA-Sa-2003, December 5, 2003.

15
UNCERTAINTY AND SENSITIVITY ANALYSIS (TASK 15)

15.1 Purpose

This procedure describes the approach for identifying and treating uncertainties throughout the Fire PRA process and identifying sensitivity analysis cases. It also prescribes a review for the identified uncertainties among the Fire PRA analysts to establish an integrated approach of addressing the effects of these uncertainties on the results of the analysis.

15.2 Scope

This procedure covers the identification and treatment of uncertainties throughout the Fire PRA. As such, it provides: (1) background on the subject of uncertainty found in Appendix U, (2) classification of types of uncertainty, and (3) a general approach with regard to practical implementation of treating expected uncertainties in the Fire PRA, as described in Appendix V.

15.3 Background Information

15.3.1 General Task Objectives and Approach

Many of the inputs that make up CDF and LERF estimates are uncertain (e.g., fire frequencies, extent of fire growth, equipment failure probabilities, operator action probabilities, etc.). Since many of these inputs are commonly treated as the result of random processes in the PRA, the core damage events and large early release events are modeled as possible results of a set of interacting random processes, specifically, those involving a fire that causes a plant transient, the response of mitigating systems to the transient including fire effects, and the associated actions of human operators. Hence, the occurrences of core damage and large early release events are also, therefore, random processes.

The frequencies of the various scenarios modeled in the Fire PRA characterize the *aleatory* uncertainties (see Appendix U for a discussion on this type of uncertainty) associated with the occurrence of a fire and possible plant and operator responses. Each input of the modeled scenarios (i.e., initiating event frequency, equipment failure probabilities, human error probabilities) also includes *epistemic* uncertainties (see Appendix U) with regard to the frequencies and probabilities described by distributions. Sampling techniques (e.g., Monte Carlo, Latin hypercube) are typically used to propagate the *epistemic* uncertainties to generate a probability distribution for each scenario frequency, and from that, CDF and LERF uncertainty distributions.

In light of this, it is important that users of the results of the Fire PRA understand the fundamental modeling assumptions underlying the analysis and the sources of uncertainty associated with the results. In particular, in the case of a PRA, it is important to understand how the analysis deals with uncertainties that arise because of issues not explicitly modeled or imperfect knowledge concerning issues that are explicitly modeled. Some uncertainties may be specifically included in the quantification of the results as described above; others may only be qualitatively addressed, or not addressed at all. This understanding of what uncertainties are addressed and how, will affect how a user perceives and uses the analysis results in subsequent decision-making activities.

It is important that the uncertainties potentially having the most significant effect on the accuracy and precision of the results be identified and their effects summarized. This procedure serves three purposes toward this overall goal; it: (1) provides background on the subject of uncertainty useful for the Fire PRA analysts, (2) offers a general approach on the identification and treatment of uncertainties for each respective task area, and (3) provides helpful notes and practice for a team of analysts when performing an integrated review of the uncertainties and making final decisions as to the treatment of the uncertainties.

15.3.2 Assumptions

The reader is referred to Appendix U for the underlying principles and theory upon which the identification and treatment of uncertainties, as espoused in this procedure, are based.

15.4 Task Interfaces

15.4.1 Input From Other Tasks

The analysts for Tasks 1 through 13 are expected to follow the overall approach provided in this procedure to articulate and quantify, when necessary, the uncertainties in their numerical results. For each affected task, the following information will be needed for uncertainty analysis:

- Sources of uncertainties, and
- Proposed approach for addressing each of the identified uncertainties.

15.4.2 Additional Plant Information Needed to Support this Task

None.

15.4.3 Walkdowns

Not applicable.

15.4.4 Outputs to Other Tasks

This procedure provides an overall approach to all the other tasks on suggested ways to address the uncertainties associated with each task in the Fire PRA process. In addition to uncertainty analysis, sensitivity analysis cases are addressed in this procedure. Once the integrated uncertainty review is performed and specific strategies for uncertainty analysis are identified and implemented, the results of those analyses should be reflected in the documentation of the Fire PRA (Task 16), including the overall results and conclusions of the PRA. Similarly, sensitivity analysis cases are proposed to be executed in Task 14.

When the Fire PRA is actually carried out, modifications of the uncertainties and their treatment may be appropriate as the level of detail evolves and results become clearer. At whatever level of specificity, acknowledging the uncertainties and whether they are modeling or data uncertainties should be made part of the overall documentation of the Fire PRA. Therefore, this procedure may have to be revisited as Fire PRA task execution progress, and as new information and results are collected or obtained. The intermediate task results may shed new light on the relative importance of various sources of uncertainty and sensitivity analyses.

15.5 Procedure

The following steps make up the procedure for addressing the uncertainties associated with each task in the Fire PRA process and identifying sensitivity analysis cases to be performed as part of the final analysis.

15.5.1 Step 1: Identify Uncertainties Associated with Each Task

The first step in performing uncertainty and sensitivity analyses is the identification of those issues (sources of uncertainty) that may make the product(s) of each task uncertain. These have been identified, at a general level, in Appendix V, which can be used as a starting point for creating a plant- and study-specific list for each task. From a practical implementation perspective, uncertainties can be generally categorized as being of two forms:

1. Modeling (logic as well as phenomenology, and including completeness issues) uncertainties; and

2. Data (parameter) uncertainties.

The outcome of this task should be a list of issues by task that, in the judgment of the analyst, lead to uncertainties in task products. The type of uncertainties (i.e., modeling or data) should also be noted.

15.5.2 Step 2: Develop Strategies for Addressing the Uncertainties

The strategies to address the uncertainties may vary from no action to explicit quantitative modeling. In each Fire PRA task procedure, the analyst is expected to identify strategies along with the general identification of issues leading to uncertainties (Step 1). Appendix V provides

suggested strategies for some of the issues. When each task is carried out, these strategies should be reviewed and reconsidered in light of the possible strategies. As necessary, the strategies should be altered based on insights from the analysis as it evolves, practical implementation requirements, resources, etc. Whatever is finally decided as the specific means to address each task's uncertainties, these strategies should also become part of the overall documentation of the Fire PRA. Possible strategies include (illustrative only–not meant to be a complete list).

- Explicit quantification of epistemic uncertainties using probability distributions and propagation of probability distributions using techniques like Monte Carlo Sampling and Latin hypercube sampling;
- Developing multiple models for an issue (e.g., degree of fire growth for a particular fire); assigning a probability that each model is the 'correct' model based on engineering judgment; and hence propagating, probabilistically, these modeling uncertainties in the overall results;
- Identify a base case as the best estimate model and/or data values and perform a sensitivity analysis changing the models or parameters of interest and documenting the quantitative effect on the overall results;
- Addressing the uncertainty or sensitivity in only qualitative terms (e.g., which scenarios would be affected and why the effect would be minor);
- Addressing the uncertainty through the use of a quality review process to ensure correctness and completeness (e.g., review of identified cables in a room); and
- Deciding the uncertainty will not (cannot) be addressed with the reasons formally noted.

In this task, the analyst for each Fire PRA task should propose strategies for each uncertainty issue identified in the preceding step. The bases for electing a certain strategy may be explicitly noted and may include the following considerations:

- The perceived importance of the uncertainty on the product(s) of the task and particularly on the overall results of the Fire PRA;
- Possible effects on future applications or other decision-making activities;
- The resources needed and available to perform the strategy; and
- Schedule constraints.

15.5.3 Step 3: Perform Review of Uncertainties to Make Final Decisions as to Which Uncertainties Will Be Addressed and How

An assembly of the task analysts and uncertainty analysis experts, as may be appropriate, is formed to review the uncertainty issues and strategies identified in the preceding two steps. The review team should include many of the analysts themselves who know the nature of the uncertainties the best, and the team should represent the multidisciplines involved in the Fire PRA so that a broad range of perspectives are included when the review is conducted. The review team should also be familiar with and follow the overall approach provided in this procedure and its appendices. This assembly should decide which uncertainty will be addressed and how (selected strategy). As part of this effort, sensitivity cases should be identified.

It is anticipated that this step would be repeated several times. Uncertainty analysis strategy review would be done in conjunction with the analysis taking advantage of the results of the Fire PRA as they are iterated upon, and thus make use of insights into which uncertainties are likely to most significantly affect the results or understanding the results. Hence, since staying informed of the uncertainties as they are identified and developed is beneficial, this activity is to take place repeatedly until the end of the project.

Review of uncertainty analysis strategies will meet multiple objectives. These include the following:

- Identify those uncertainties that will not be addressed because they are expected to be unimportant or otherwise unworthy of being addressed or cannot be addressed (with reasons noted). In particular, it is not expected that uncertainty analyses will be performed on screened out portions of the model/results or for issues that should have little impact on the results or anticipated future applications.
- Identify the uncertainties that will be addressed, as well as the strategy(ies) to be used to address each uncertainty considering the suggestions offered in this procedure.
- Identify which uncertainties will be grouped together into a single uncertainty assessment (i.e., the combined effects are to be determined) because of logical relationships among the uncertainties.
- Identify issues that will be treated in a sensitivity analysis and specify sensitivity analysis cases.
- Provide instructions to and work with individual task analysts to perform the necessary uncertainty/sensitivity analyses.

16
FIRE PRA DOCUMENTATION (TASK 16)

16.1 Purpose

This procedure provides the general practice considered necessary for documenting the Fire PRA and its results.

16.2 Scope

This procedure covers the recommended documentation of the Fire PRA, including coverage of all the major tasks of the Fire PRA, as outlined in this document.

16.3 Background Information

16.3.1 General Task Objectives and Approach

The objective of this task is to ensure there is adequate documentation of the Fire PRA to allow review of the Fire PRA development and its results, as well as to provide a written basis for any future uses of the Fire PRA.

16.3.2 Assumptions

No assumptions were identified relevant to this documentation task.

16.4 Task Interfaces

16.4.1 Input From Other Tasks

There are specifically addressed or implied documentation recommendations in the prior tasks' procedure steps.

16.4.2 Additional Plant Information Needed to Support this Task

No additional plant information is required.

16.4.3 Walkdowns

No walkdowns are required to perform this task.

16.4.4 Outputs to Other Tasks

As this is the last task in the Fire PRA process, there are no outputs to other tasks.

16.5 Procedure

A recommended outline of the final fire PRA report is provided in Table 16-1. The outline also identifies a set of supporting documentation items (Table 16-2) that will contain the results of individual tasks. The documentation should provide an adequate summary of the development of the Fire PRA, including the performance and results of all the previous tasks in this document and the results of the Fire PRA itself (with uncertainties, sensitivities, observations, etc.).

16.6 Uncertainty

This is not applicable to this task.

Table 16-1
Suggested Outline for Fire PRA Documentation (Main Fire PRA Report)

Executive Summary
I. Introduction
Introductory statements, including purpose of the analysis, reasons for conducting the analysis, background information, other past fire risk analyses done for the facility, etc.
II. Methodology
Reference requantification procedure version being used. A discussion on deviations, if any, from requantification procedures.
III. Fire CDF
This section may be organized per analysts' judgment. The following are recommended to be addressed.
Data Sources Used
Provide a general discussion of the type of documents, electronic files, and industry and public domain information used. For issues that may have a profound impact on the results of the Fire PRA, provide a discussion. For example, status or availability of cable routing information may need to be discussed. Uncertainties arising from poor or lack of documentation may be discussed in this section.
Plant Partitioning and Compartment Definition
Summarize the plant partitioning effort and provide a list of compartments. Discuss criteria employed. Discuss deviations from the criteria. Provide in this section a set of plant architectural drawings that shows the boundaries of every compartment.
Plant Postfire Shutdown Response Model
Discuss the PRA or other safe shutdown models available. Discuss the basis of the plant response model selected. Discuss changes made to the model and the process for selecting components. Reference supporting documentation for list of components.
Circuit Analysis
Discuss the circuit analysis done for different stages of the fire PRA in terms of methodology employed, information sources, and results.
Fire PRA Components and Compartments
Discuss fire compartments and Fire PRA components in them. Provide a list of compartments and a summary of Fire PRA components in them.

Table 16-1
Suggested Outline for Fire PRA Documentation (Main Fire PRA Report) (Continued)

Qualitative Screening Discuss qualitative process and provide a list of compartments, along with qualitative screening result and basis for screening.
Fire Ignition Frequency Discuss the fire ignition frequency analysis process and provide a list of frequency bins and frequency values. Provide a discussion on equipment counting process. Provide fire frequencies by compartment and frequency bin.
Postfire HRA Discuss the HRA analysis process. Discuss major assumptions.
Quantitative Screening–I Discuss first quantitative screening process. Provide (1) a list of unscreened compartments from qualitative screening, (2) quantitative values for screening, and (3) screening results.
Scoping Fire Modeling Discuss scooping analysis process.
Quantitative Screening–II Discuss second quantitative screening process. Provide (1) a list of unscreened compartments from first quantitative screening, (2) quantitative values for screening, and (3) screening results.
Detailed Fire Modeling–Single Compartment Discuss selected scenarios for detailed analysis; fire propagation modeling; fire suppression analysis process; and provide a summary of results.
Detailed Fire Modeling–Main Control Room Discuss main control room analysis. List scenarios selected and basis for the selection.
Detailed Fire Modeling–Multicompartment Discuss the multicompartment process. Provide a matrix of exposing and exposed compartments. Discuss analysis stages. Provide final results and basis for the results
Seismic Fire Interactions Discuss seismic fire interaction and scenarios considered. Provide basis for selecting scenarios to be analyzed. Provide results.
Fire Risk Quantification Discuss final fire risk quantification process. Provide a list of scenarios by compartment, affected components, fire scenario frequency, CCDP and CDF, LERF. Provide uncertainty distribution of the CDF.
Fire LERF This section may address all those elements of the fire PRA relevant to LERF and that were not discussed in the preceding sections.
Uncertainty and Sensitivity Analyses Discuss issues and bases of sensitivity analyses. Provide results (CDF, LERF, etc.). Provide a discussion on insights gained from sensitivity analysis.
Findings, Conclusions and Recommendations

Table 16-2
Suggested Outline for Fire PRA Documentation (Fire PRA Supporting Documents)

List of Documents, Files, and Data Sources
Provide proper references of documents, electronic files, and industry/public domain information and data sources used.

Walkdown Notes
Provide a complete set of plant walkdown notes in support of various tasks.

Plant Response Model Selected
Fault and event trees of Fire PRA.

List of Fire PRA Components
Provide a complete list of components considered as Fire PRA components.

Circuit Analysis
Provide a complete list of components considered as Fire PRA components, failure modes of each component modeled in the risk model (include multiple failures), and probabilities of spurious actuation and other failure modes per compartment where quantified. Show which entries are not analyzed.

Fire Ignition Frequency
Provide equipment count tables.

HRA Analysis
Provide a list of HRA basic events of the response model. Provide applicable HEP and information relevant to HEP quantification.

Scoping Analysis
Provide all supporting documentation on scooping analysis.

Detailed Analysis–Single Compartment
Provide supporting documentation on detailed analysis one compartment at a time.

Provide the following for each fire scenario: scenario description, fire ignition frequency breakdown, fire growth analysis results summary, fire suppression analysis event tree, and fire scenario frequency.

Detailed Analysis–Main Control Room
Provide supporting documentation on detailed analysis of the Control Room.

Detailed Analysis–Multicompartment Analysis
Provide supporting documentation on multicompartment analysis.

Seismic Fire Interaction
Provide supporting documentation on seismic fire interaction analysis.

Final Fire Risk Quantification
Provide fire risk quantification results in terms of compartments, scenarios, fire scenario frequencies, and the minimal cut set list of final fire risk quantification.

Provide fire risk minimal cut sets.

Sensitivity Analyses
Provide full description of sensitivity analysis cases, changes to various risk parameters considered for each case, final results of each cases, and related discussions, if warranted.

17
PLANT WALKDOWNS (SUPPORT TASK A)

17.1 Introduction

Plant walkdown is defined as an inspection of local areas in a NPP where systems and components are physically located to ensure accuracy of procedures and drawings, equipment location, operating status, and environmental effects or system interaction effects on the equipment that could occur during accident conditions. It is critically important that several plant walkdowns be conducted as an integral part of fire risk analysis. Paper and electronic documents are not sufficient to provide all the information needed for a proper fire risk analysis. Subtle features of equipment installations and structural characteristics that may influence the outcome of a fire event are often not explicitly displayed on drawings or other documents. Housekeeping practices and various plant conditions can only be understood by on-site inspection. Often a wide range of paper documents need to be reviewed to select those that the analysts may need to use closely and retain as part of project documents. Such a selection process is often best conducted at the site where most up-to-date documents can be found.

Generally, several site walkdowns are conducted in support of a fire risk analysis. The first walkdown is typically used for plant familiarization and identification of necessary plant documents. Later walkdowns are typically focused on specific topics. Even though the scope of the walkdowns may vary considerably, all walkdowns involve common set of steps. In this appendix, those common steps are discussed first. The various walkdowns are discussed later and cross-referenced with the specific tasks of this fire risk quantification process. The types of analysts that should participate in a walkdown, duration, and schedule are also addressed.

17.2 Overall Walkdown Approach

All walkdowns are generally unique and the scope and agenda of a walkdown should be adjusted according to the specific needs of the analyst and the conditions of the plant. However, there are some common elements among the walkdowns that should enhance the efficient use of the analysts' and plant personnel time.

Even though it is obvious, it is important to stress that safe conduct and strict adherence to the safety and security rules of the plant supersedes all other needs and requirements of a walkdown.

All walkdowns consist of the following activities:

- Previsit planning and proper communication with the plant to achieve the following:
  - Secure permission to enter the plant (if necessary) and visit various locations
  - Ensure that certain members of plant personnel are available
  - Develop a list of plant locations to be visited

  - Develop a list of documents to be reviewed
  - Develop the walkdown agenda.
  - Prepare a list of items to be taken to the plant.
- An entrance meeting with plant staff and management to discuss the following:
  - Walkdown objectives
  - Locations the team will visit to identify any relevant requirements pertaining to access, radiological, and security controls,
  - Securing a convenient work area where the team can review documents and conduct meetings
  - Document retrieval, control, and other relevant topics
  - Work hours,
  - Permission to use a camera
- Walkdown activities
  - Visit planned plant locations and take necessary notes and photographs (if permitted)
  - Interview plant personnel knowledgeable of the topics on the agenda
  - Review plant documents
  - Consolidate and review the notes to ensure that all the necessary information has been collected
- An exit meeting with plant management and personnel (if the management so desires) to summarize the objectives of the walkdown, what was done, what was achieved (including any problems encountered), and to identify and clarify additional action items, as appropriate.

The optimal makeup of the walkdown team will depend on the extent to which compartment characterization information is desired. In general, it is recommended that the walkdown team include someone knowledgeable of the plant's fire protection program and someone with knowledge of the plant operating and support systems layout. Fire protection experts can provide enhanced information regarding potential fire sources, the fire barrier qualification status of credited partitions, and fire protection features. Plant systems/layout experts can assist in the identification of plant systems and components located in a given fire compartment. This knowledge will be needed as the analysis progresses. The initial confirmatory walkdown provides a convenient mechanism for gathering this information.

The walkdown team may use a standardized form to record its findings. Using such forms allows some level of standardizing the type of information collected by various analysts when working in parallel on the same task. It also creates a compendium of various key information items for each plant location that can facilitate retrieval of specific information items when conducting the detailed fire scenario analysis. The standardized form may include the following topics for the analyst to address during the initial or later walkdown:

- Location identifier,
- Location name,

- Characteristics of the boundaries (i.e., fire walls, doors, etc.),
- Access points from other locations and accessibility during power operation,
- Openings into adjacent plant locations,
- Items typically present in the location,
- List of fire PRA components (not including cables),
- Equipment count (per Task 6 instructions),
- Information regarding transient combustibles and transient ignition sources (e.g., possibility of conducting welding during power operation),
- Fire protection features (passive and active), and
- Other special features and characteristics relevant to fire risk analysis.

The form may be updated every time a member of the analysis team visits the site or a specific location.

17.3 Typical Walkdown Needs

During the course a fire risk analysis, it is necessary to visit the plant and walkdown specific locations at different stages of the analysis. In general, the following walkdowns have been found to be necessary:

- An initial walkdown to confirm the definition of locations and establish the characteristics of each location. In the context of partitioning, the primary walkdown objective is to confirm the existence and integrity of credited partitioning features and elements. The walkdown may also identify secondary partitions that can be credited to further partition an initially identified compartment. A second walkdown objective is to gather information on the dominant features of each compartment. Information of interest includes a description of the credited partitions that define each compartment, identification of (and/or counting of) primary fuel and ignition sources, cataloging of fire protection features (e.g., detection, suppression, raceway fire barriers, etc.), and the identification of adjacent compartments (above, below, and horizontal adjacencies). Such walkdowns can also support mapping of plant components, systems, and cables to and within fire compartments:
- To confirm the location of a specific cable.
- In support of fire frequency estimation process (Task 6), it is necessary to count all the relevant ignition sources within each location. This can only be completed by visiting each location and confirming the counts made using paper documents.
- The scoping fire modeling (Task 8) requires direct observations at each location to confirm that no potential targets are within the zone of influence of a fixed ignition source.
- To verify the detailed fire scenario analysis by direct observations at the affected locations.
- To conduct human reliability analysis interviews with plant operators and direct observations of affected plant locations.
- To verify seismic fire interaction.

Each walkdown has some unique feature. These features are summarized in Table 17-1 in terms of specific walkdown actions, duration, schedule, and participants. A cross reference with the tasks of this fire risk quantification process is provided in Table 17-2.

Table 17-1
Fire Risk Walkdowns

Walkdown	Walkdown Actions	Duration	Minimum Team Participants	Site Participants	Schedule
1. Initial	Confirmatory and familiarization plant walkdowns for Tasks 1 and 2 information. Visit every compartment in the plant that is possible to enter with reasonable preparation (i.e., may exclude high radiation areas). Take photographs (if permitted). Take notes about compartment characteristics in terms of ignition sources, fire protection features, Fire PRA components (Task 2), Openings to adjacent compartments.	3 to 5 days	Fire modeler, Fire PRA safe shutdown analyst	Fire hazard analysis and Appendix R of 10 CFR Part 50 experts	After the information identified in Tasks 1 and 2 are collected from paper documents
2. Cable routing confirmation	Confirmatory plant walkdown for verifying the location of specific cables. Only compartments where specific cables, cable trays or conduits need to be traced are visited. Typically, drawings are marked identifying location of the cable trays and conduits.	As necessary	Circuit analysis team members	Appendix R of 10 CFR Part 50 expert or electrical engineer from the electrical department	During execution of Tasks 3, 9, 10, and 11
3. Component count	Count number of equipment items in each ignition frequency bin. Enter the count in a matrix by location and ignition source type.	3 to 5 days	Fire modeler	Fire hazard analysis expert	As part of Task 6, after an initial count is completed using paper documents. May be conducted as part of the initial walkdown
4. Scoping fire modeling	Visit every location that has not been screened out in the preceding tasks, identify the fixed ignition sources and potential targets around them, establish whether or not target could be damaged, identify those ignition sources that cannot cause any target damage.	3 to 5 days	Fire modeler	Fire hazard analysis expert	As part of Task 8, after a catalog of ignition source types and potential zone of influence are put together

Table 17-1
Fire Risk Walkdowns (Continued)

Walkdown	Walkdown Actions	Duration	Minimum Team Participants	Site Participants	Schedule
5. Detailed analysis	Visit those locations for which detailed analysis will be conducted. Study the specific scenarios that are considered. Photograph the specific items (if permitted).	As necessary	Fire modeler	Fire hazard analysis expert	As part of Task 11, after an initial identification of all the detailed fire scenarios
6. Human reliability	Schedule interviews with plant operators to discuss specific operator action scenarios.	As necessary	Human reliability analyst	Control Room and plant operators	As part of Task 12, after a list of human actions are identified in conjunction with the detailed fire scenario analysis team
7. Seismic fire interaction	Visit all plant locations that contain fire PRA related components or cables, large quantity of flammable materials, or other highly hazardous materials. Identify conditions that may arise from sever vibration or displacement of equipment leading to fire, explosion, or release of a highly hazardous material. Record the findings by plant location.	2 to 4 days	Fire and seismic modelers	Fire hazard analysis expert	As part of Task 13 effort, after an initial list of potential sources of hazard are identified

Table 17-2
Fire Risk Tasks and Walkdown Needs

Task	1. Initial	2. Cable routing Confirmation	3. Component count	4. Scoping fire modeling	5. Detailed analysis	6. Human reliability	7. Seismic fire interaction
Task 1–Plant boundary definition and partitioning	X						
Task 2–Fire PRA component selection	X						
Task 3–Fire PRA cable selection		X					
Task 4–Qualitative screening							
Task 5–Fire-induced risk model							
Task 6–Fire ignition frequency	(1)		X				
Task 7–Quantitative screening							
Task 8–Scoping fire modeling				X			
Task 9–Detailed circuit failure analysis		X					
Task 10–Circuit failure mode likelihood analysis		X					
Task 11–Detailed fire modeling		X					
Task 12–Post-fire human reliability analysis					(2)	X	
Task 13–Seismic-fire interactions	(3)						X
Task 14–Fire risk quantification							
Task 15–Uncertainty and sensitivity analysis							
Task 16–Fire PRA documentation							

(1) Equipment count may be conducted as Task 1-related information is being gathered.

(2) Post fire human reliability analysis related walkdown is best to be conducted in conjunction with the detailed fire analysis walkdown.

(3) Seismic-fire related information might be gathered along with Task 1-related information.

18
FIRE PRA DATABASE SYSTEM (SUPPORT TASK B)

18.1 Purpose

A comprehensive fire PRA project of this type necessitate an analysis of fire-induced circuit failures beyond that typically conducted during original Fire PRAs. Additional analytical tools are needed to support these *refined* electrical analyses. The tools of interest generally involve enhancements to an existing database system (e.g., plant cable and raceway system, Appendix R of 10 CFR Part 50 database, PRA database, etc.) or development of a new database that is structured to support the essential functionality. The purposes of this task are to:

- Identify the database functional capabilities necessary to support a Fire PRA project as outlined in this procedure, including analysis, screening, and correlation of data; and
- Establish a framework and process for assessing existing plant database features and functionality, and implementing an enhancement plan to develop the necessary database functional capabilities. A Database Augmentation Plan is developed to ensure enhancements are implemented through a formal and structured process.

The ultimate objective is to develop a relational database that can quickly and accurately assess potential equipment failures for fire scenarios of interest. Scenarios may include, but are not limited to, total failure of all circuits in a fire area or fire compartment, failure of cables within a specific raceway, and failures based on specific equipment failure modes.

18.2 Scope

This chapter identifies the criteria and functional elements for an effective Fire PRA Database System[1]. It also provides a structured process for upgrading/supplementing existing CRS databases to achieve the necessary capabilities. Depending on specific plant circumstances, it is also possible that the Fire PRA Database functions may be accomplished by a combination of new and existing databases. This task is an adjunct effort associated with the other analysis tasks for the project.

The scope of this task does not address implementation of software quality assurance requirements or configuration control issues that might be applicable for plant-specific work. Nor does this procedure address validating the accuracy of plant-specific information input into the database (e.g., equipment data, cable data, cable routing, etc.). This information should be confirmed as part of the interfacing task that generates the data of interest.

---

[1] The term "Fire PRA Database" is used generically throughout these procedure to represent the database system or systems used to support the Fire PRA Analysis, regardless of whether the system is part of an existing plant database, a newly developed database, or a combination of new and existing databases.

18.3 Background Information

18.3.1 General Task Objectives and Approach

This task is distinctly different from the other Fire PRA tasks in that it does not specify criteria and performance requirements for conducting the Fire PRA analysis itself. Rather, it specifies the criteria and process for creating an analytical tool (i.e., Fire PRA Database) that will enable analysts to conduct the necessary analyses efficiently and accurately. Manual compilation is nearly prohibitive due to the low efficiency and human errors that can be introduced while repetitively manipulating large volumes of data.

The Fire PRA Database should support the following analytical tasks:

Task 1–Plant boundary definition and partitioning,

Task 2–Fire PRA Components Selection,

Task 3–Fire PRA Cable Selection,

Task 4–Qualitative Screening,

Task 7–Quantitative Screening,

Task 9–Detailed Circuit Failure Analysis, and

Task 10–Circuit Failure Mode Likelihood Analysis.

In satisfying the above analysis capabilities, the database serves as the primary location for information and data generated by the Fire PRA equipment and cable selection tasks, Tasks 2 and 3. Development of the Fire PRA Database includes four basic steps. Figure 18-1 shows a summary of the task work flow for developing the Fire PRA Database.

18.3.2 Assumptions

The following assumptions form the basis for this task:

- A cable and raceway database system is in place and available to identify cable/raceway routings and relationships;
- Users of this procedure are knowledgeable and have experience with software development and analysis;
- Users are familiar with the plant's existing cable and raceway data system, its content, and its inherent limitations; and
- Users are familiar with performing Appendix R of 10 CFR Part 50 analysis (preferably using electronic analysis techniques).

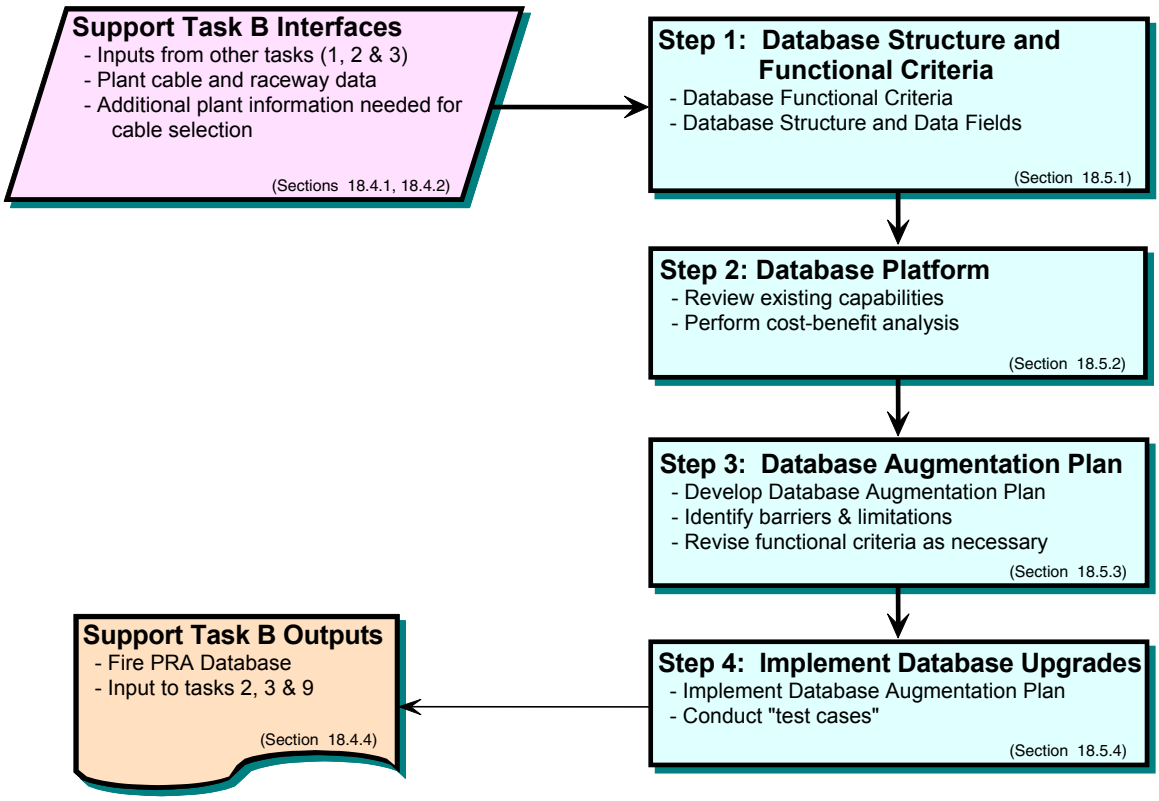

Figure 18-1
Fire PRA Database Structure–Equipment and Cables

18.4 Task Interfaces

18.4.1 Input From Other Tasks

18.4.1.1 Plant Partitioning Boundaries and Designations

This task needs the plant partitioning boundary definitions and fire compartment designations from Task 1, *Plant Boundary Definition and Partitioning*, as a prerequisite. The plant fire area/fire compartment information is input to the Fire PRA Database so that the database system can support queries requiring automated correlation to cable raceway locations.

18.4.1.2 Plant Cable and Raceway Data

This task needs basic cable and raceway information from the plant CRS database or other available sources. This information may reside in the plant CRS database or be uploaded into the Fire PRA Database. In either case, the database system should be able to support queries requiring automatic correlation of cables-to-raceways-to-locations (fire areas and/or fire compartments).

18.4.1.3 Fire PRA Equipment

A list of predefined descriptive options for the Fire PRA equipment is necessary to support data entry for the equipment. The use of predefined options fosters consistency in data entry, which is essential for developing sort and query functions by field attributes. The component information collected as part of Task 2, Fire PRA Components Selection, should map to data fields in the Fire PRA Database.

18.4.1.4 Fire PRA Cable Selection

A list of predefined cable attribute options is helpful to support data entry for the fire PRA cables. The use of predefined options fosters consistency in data entry, which is essential for developing sort and query functions by field attributes. The cable information collected as part of Task 3, Fire PRA Cable Selection, should map to data fields in the Fire PRA Database. It is important that the content and format for information collected as part of cable selection align with the specified data fields, so that the cables can be correlated to the Fire PRA Equipment List and raceway location information. This link is essential to automate the process of identifying the potential for equipment failures on a fire scenario basis.

18.4.2 Additional Plant Information Needed to Support this Task

The following additional source information should be considered:

1. Applicable software security and backup procedures and policies, and
2. Plant software development procedures.

18.4.3 Walkdowns

This task does not depend on walkdowns.

18.4.4 Outputs to Other Tasks

The Fire PRA Database is intended to support the analysis needs associated with Tasks 2, 3, and 9. Specific interfaces include:

- Task 2, Fire PRA Components Selection: The Fire PRA Database system establishes the framework for creating the Fire PRA Equipment List in a database format. The database system is populated with the fire PRA equipment information as part of Task 2. The system can then be used to generate reports of the entire equipment list or subsets based on specified attributes.
- Task 3, Fire PRA Cable Selection: The Fire PRA Database system establishes the framework for creating the Fire PRA Cable List in a database format. The database system is populated with the fire PRA cable information as part of Task 3. The system can then serve as the primary analytical tool for generating Target Equipment Location Reports, which are a complete listing of cables and equipment on a fire area, fire compartment, or raceway basis.
- Task 9, Detailed Circuit Failure Analysis: The detailed circuit failure information generated as part of Task 9 is put into the Fire PRA Database. The database system can then take advantage of relational attributes in the data to compile equipment failures for specific scenarios. This information serves as a direct input to the quantitative screening task, Task 7.

18.5 Procedure

The steps below outline a straightforward process for determining what database tools are needed and the viable options for developing and implementing these tools. Ultimately, each plant should weigh the pros and cons of the various options and determine the most prudent and cost-effective approach for developing the analytical tools to support the detailed data queries necessary to complete a comprehensive Fire PRA analysis.

18.5.1 Step 1: Database Structure and Functional Criteria

18.5.1.1 Step 1.1: Database Functional Criteria

The first step in developing the Fire PRA Database is to specify the functional criteria. The functional criteria establish the data input and output criteria as well as basic functionality. Most importantly, the functional criteria set forth the output query, sort, and report features. These criteria will vary from plant to plant and depend on the specific nature and objectives of the Fire PRA Analysis. Each plant should consider the objectives of their program and tailor the functional criteria accordingly. That said, a basic set of functional criteria is provided below as a starting point for consideration.

18.5.1.1.1 Data Input Criteria

- Plant fire area and fire compartment information.
- Fire PRA equipment information–as constrained by plant-specific lookup table options and data integrity needs.
- Fire PRA cable and circuit information–as constrained by plant-specific lookup table options and data integrity needs.
- Source data information–as specified by lookup table options. The source data tables contain a listing of unique, predefined options for defined equipment and cable attributes.
- Source data information necessary to conduct queries, lookups, and sorts in support of specified output reports.

18.5.1.1.2 Output Criteria

- Fire-PRA Equipment List–A list of fire PRA equipment, sortable by fire area, fire compartment, equipment type, and system. Report should include equipment identification, system designation, equipment type, and position information (i.e., normal, desired, loss of power, etc.).
- Fire PRA Cable List–A list of fire PRA cables, sortable by fire area, fire compartment, raceway, cable identification, and equipment identification. Report should include associated equipment, cable function, and cable fault consequence.
- Circuit Analysis Reports–A summary of the circuit analysis for an individual component. Report should include equipment identification, power supply, fire PRA cables, cable functions, and cable fault consequences.

- Target Equipment Location Reports–A listing by fire area, fire compartment, or raceway of fire PRA equipment that is located within the specified enclosure or whose circuits are contained within the specified enclosure. Reports should include equipment identification, cable identification, cable function, and cable fault consequence.
- Cable Routing Reports–A report identifying the full routing of a specified cable or group of cables, sortable by cable identification or equipment identification. The report should include cable identification, associated equipment, raceways, fire areas, and fire compartments.

18.5.1.2 Step 1.2: Database Structure and Data Fields

The functional criteria cannot be fully specified without defining the necessary data fields and basic database structure. Appendix W contains a sample database structure that may be used as a generic template for a standalone system. The example is also helpful in understanding the typical data relationships that will need to be created if enhancing an existing system.

The basic elements to consider in designing the database system are:

- Database structure (tables and table relationships),
- Essential fields for database tables,
- Data relationships and constraints, and
- Logical constraints for data integrity.

Each of these elements is discussed further in the sample database structure presented in Appendix W.

18.5.2 Step 2: Database Platform

Once the functional criteria are established, a software platform should be selected for the Fire PRA Database. Options may involve developing a new standalone database platform or enhancing an existing database system. (*Note: Depending on specific plant circumstances, the Fire PRA Database functions may be achieved by a combination of databases. For example, the exiting plant CRS might be used to conduct equipment and cable queries that are then downloaded to a new database for conducting specific Fire PRA analyses.*)

Considerations for selecting the database platform are discussed below.

1. As part of selecting the best option for developing the essential database functionality, existing data and database capabilities should be reviewed.
    - Compare the functional criteria established in Step 1 against existing database capabilities to identify missing attributes.
    - Review the CRS and other sources of cable and raceway information to identify options for populating the Fire PRA Database with the necessary cable-to-raceway-to-compartment relationships.
2. Based on an understanding of existing database capabilities, consider the following factors in selecting a platform for the Fire PRA Database:

- Long-term maintainability,
- Ease of use,
- Project-specific configuration control (software, data entry, database access),
- Long-term configuration and control (e.g., incorporation of plant modifications),
- Company/plant software and database policies and procedures,
- Data redundancies,
- Data security and integrity,
- User groups, and
- Budget, schedule, and resource restraints.

3. A cost/benefit analysis should be considered to help assess the tradeoffs of building the Fire PRA Database using a new database platform or enhancing an existing database system.

18.5.3 Step 3: Database Augmentation Plan

1. Based on the results of Step 2, develop a Database Augmentation Plan for creating, upgrading, or enhancing database capabilities to achieve the desired functionality. *Note: In many cases, existing plant software development procedures satisfy the intent of the Database Augmentation Plan. These procedures should be followed in lieu of creating a separate plan.*
2. Identify significant barriers and practical limitations associated with implementing database enhancements.
3. Revise functional criteria if practical limitations will prevent successful implementation of upgrades.

18.5.4 Step 4: Implement Database Upgrades

This step implements the Database Augmentation Plan developed in Step 3. This step is accomplished by:

1. Implementing the actions specified in the Database Augmentation Plan.
2. Conducting sample “test cases” to confirm the Fire PRA Database is functioning correctly and that the capabilities are adequate to support the three phases of analysis.

18.6 Uncertainty

Development of the Fire PRA Database contains no inherent uncertainty related to the actual PRA analysis. Errors in the software algorithms for compiling data and developing relationships represent a potential source of uncertainty to the analysis. For example, a coding inconsistency could result in a critical cable being omitted from a Fire PRA cable report.

19
GLOSSARY

The following are the definitions of important terms used throughout the methodology. In recognition that multitude of other documents that define the same terms, such as NFPA 805, Regulatory Guide 1.189, and NEI-00-01 an attempt was made at using consistent definitions.

Term	Definition
Accident sequence	Logical expression of an initiating event and subsequent equipment and human responses that collectively, should they occur, define a way that core damage (and possibly a large early release) is expected to occur. Typically, an accident sequence defines a combination of equipment and operator failures that, following the initiating event, lead to core damage. An accident sequence may be defined at a functional level (e.g., fire in auxiliary feedwater (AFW) room and failure of both secondary and primary (feed and bleed) cooling), at a system level (e.g., Fire in AFW room and failure of all AFW and failure of high pressure injection (HPI) for feed and bleed), or at an equipment/human action level (e.g., Fire in AFW room and failure of AFW Pumps A and B to start and failure of operator action to initiate feed and bleed).
Activation temperature	Temperature at which a fire detection system based on a heat sensitive device actuates.
Aleatory uncertainty	An uncertainty due to inherent randomness or a stochastic process. Such uncertainties are irreducible in that no matter what the level of knowledge, some unpredictability in the variable of interest is still expected.
Associated Circuit	The term “associated circuits” has specific meaning within the context of Appendix R of 10 CFR Part 50 safe shutdown analyses. For consistency, the same meaning should be adopted for the Fire PRA Upgrade Project. An associated circuit is defined as any circuit that can, through adverse interaction, indirectly affect proper operation of critical equipment/systems due to a shared power supply, shared raceway, or spurious actuation. Associated circuits result as a consequence of: • Inadequate electrical coordination (common power supply associated circuit) • Inadequate circuit over-current protection (common enclosure associated circuit) • Undesired component actuation (spurious operation associated circuit)
Automatic trip	Reactor trip that is initiated by an automatic signal from plant reactor protection systems (RPS) in response to an unanticipated conditions such as a fire affecting plant critical equipment and or circuits.

Term	Definition
Cable	In this context, the term cable refers to assemblies designed to conduct electrical current. Hence, a cable is an assembly of one (single-conductor cable) or more (multi-conductor cable) insulated electrical conductors (generally copper or aluminum) that may or may not be surrounded by an outer jacket. (This definition excludes fiber-optic type cables that are not of interest in the current context.)
Cable Failure	A condition whereby the affected (or failed) Cable is no longer able to perform its intended function.
Cable Failure Mode	The mode by which a wire or conductor fails. Three principle failure modes are considered in this study: open circuit, ground fault (short-to-ground), and hot short.
CCDP	The conditional core damage probability calculated by the Fire PRA plant model. This probability is conditional on the various fires postulated for inclusion as initiating events and thus does not include the frequencies of the fire initiators, but does include the impact of human errors in carrying out specific missions.
Ceiling Jet	Refers to the relatively rapid gas flows in a shallow layer beneath the ceiling surface that is driven by the buoyancy of hot combustion products. Ceiling jets form when a fire plume impinges under a ceiling and hot gasses spread away.
Circuit Analysis	The process of identifying cables and circuits that, if damaged by fire, could prevent a Fire PRA component from operating correctly.
Circuit *Failure* Mode	The manner in which a circuit fault is manifested in the circuit. Circuit failure modes include loss of motive power, loss of control, loss of or false indication, open circuit conditions (e.g., a blown fuse or open circuit protective device), and spurious operation.
Circuit *Fault* Mode	The manner in which a circuit fault is manifested in the circuit. Circuit fault modes include loss of motive power, loss of control, loss of or false indication, open circuit conditions (e.g., a blown fuse or open circuit protective device), and spurious operation.
CLERP	The conditional large early release probability calculated by the Fire PRA plant model. This probability is conditional on the various fires postulated for inclusion as initiating events and thus does not include the frequencies of the fire initiators.
Cognitive process	An internal mental human activity that receives, manipulates, and stores knowledge or information, or that controls actions according to this knowledge.
Common Enclosure Associated Circuit	A common enclosure associated circuit concern exists when a circuit protective device is not sufficiently rated to interrupt the possible fault current to which it might be subjected or the protective device is too large to prevent thermal damage to downstream cables. Either case has the potential to initiate a secondary fire.
Common Power Supply Associated Circuit	A common power supply associated circuit concern exists for a critical power supply when a feeder over-current protective device associated with a non-critical cable is not properly coordinated with upstream supply devices. Under these circumstances, a fault on the non-critical cable could result in an upstream over-current protective device tripping prior to the feeder device, thereby de-energizing the critical power supply and the critical loads it serves.
Compartment, room, or enclosure	The location where the fire occurs.

Term	Definition
Conditional Core Damage Probability (CCDP)	The conditional core damage probability calculated by the Fire PRA plant model. This probability is conditional on the various fires postulated for inclusion as initiating events and thus does not include the frequencies of the fire initiators.
Conductor-to-Conductor Short	An abnormal connection (including an arc) of relatively low impedance between two conductors. A conductor-to-conductor short between an energized conductor of a grounded circuit and a grounded conductor results in a ground fault. A conductor-to-conductor short between an energized conductor and a non-grounded conductor results in a hot short. A conductor-to-conductor short between an energized conductor of an ungrounded circuit and a neutral conductor has the same functional impact as a ground fault.
Confined ceilings	Ceilings in which the radial spread of ceiling jets is obstructed by an object, such as beams or walls in a corridor, partially creating a channel.
Controlled Manual shutdown	Reactor shutdown initiated by operators for planned outage or as the result of limiting conditions for operation.
Core Damage Frequency (CDF)	The core damage frequency calculated by the Fire PRA plant model. CDF is the product of CCDP and fire initiator.
Core Damage Probability (CDP)	The core damage probability with one or more intact trains and/or systems unavailable. CDP is the product of CDF (with one or more intact trains and/or systems unavailable) and a characteristic exposure time (e.g., maximum allowable outage time).
CRS (Cable and Raceway System)	The CRS is a software-based schedule of raceways and cables for the plant. As a basic function, the CRS generally correlates cables to raceways and tracks basic cable and raceway attributes. Newer cable and raceway systems typically contain sophisticated database sort and query features.
Cue	A change in condition or signal that triggers the need for an action.
Data (parameter) uncertainty	The uncertainty in a data (parameter) value in the Fire PRA such as the frequency of the fire initiator, the failure probability of an operator action, etc. These uncertainties may be aleatory or epistemic (or a combination), depending on the specific nature of the uncertainty and the basis for that uncertainty.
Diagnosis	The human cognitive process of determining the current plant state, assessing the situation, and anticipating its future states.
Enclosure	An enclosure is room surrounded by partial or complete walls. An enclosure may be defined as a fire area, fire zone, or fire compartment.
Epistemic uncertainty	An uncertainty due to a lack of, or weakness in knowledge. Such uncertainties can, theoretically, be reduced by obtaining more knowledge such as through observation of repeated trials of an event so as to learn the true value of the variable of interest.
Equipment Failure Consequence List	A composite listing of the types of circuit failures assumed to affect the cable supporting the equipment (component) and the resultant effect on the equipment for each failure assumed.
Equipment Failure Response Report	A brief summary of all potential equipment failures resulting from fire damage to its associated cable.
Field models	Types of models more generally known as computational fluid dynamic (CFD) models in other disciplines. In a field model, a space is subdivided into a very large number of cells, which may be in the tens of thousands. The conservation equations for mass, species, energy, and momentum are then applied to each cell along with appropriate initial conditions and boundary conditions for the calculations domain.

Term	Definition
Fire Area	The portion of a building or plant that is separated from other areas by rated fire barriers adequate for the fire hazard (Per U.S. NRC Regulatory Guide 1.189).
Fire Barrier	Components of construction (walls, floors, and their supports), including beams, joists, columns, penetration seals or closures, fire doors, and fire dampers that are rated by approving laboratories in hours of resistance to fire, that are used to prevent the spread of fire (Per U.S. NRC RG 1.189) and restrict spread of heat and smoke.
Fire Compartment	A compartment is a well-defined enclosed room, not necessarily with fire barriers. Fire compartments generally fall within a fire area, and are bounded by non-combustible barriers where heat and products of combustion from a fire within the enclosure will be substantially confined. Boundaries of a fire compartment may have open equipment hatches, stairways, doorways or unsealed penetrations. This is a term defined specifically for fire risk analysis and maps plant fire areas and/or zones, defined by the plant and based on fire protection systems design and/or operations considerations, into compartments defined by fire damage potential. For example, the control room or certain areas within the turbine building may be defined as a compartment.
Fire Critical Cable List	The list of plant cables needed to ensure the proper operation of components listed on the fire critical equipment list. The list contains all circuits/cables that, if damaged by fire, could prevent proper component operation *or affect operator actions*. The list includes circuits/cables that can cause unwanted energization (spurious actuation) of one or more components.
Fire Critical Equipment List	The list of plant equipment credited in the Fire PRA Model to assess the core damage and large early release risk from sequences involving fires.
Fire frequency	The rate of occurrence of fire events per reactor year.
Fire Plume	Buoyant stream of hot gases rising above a localized area undergoing combustion into surrounding space of essentially uncontaminated air
Fire PRA	The PRA model being developed to model and analyze the plant responses (i.e., accident sequences) in response to initiators and other events involving fire to determine the core damage and large early release risk from sequences involving fires.
Fire PRA (FRA) Systems and Equipment	Structures, systems, cables (power, instrumentation, and control), and equipment credited for plant shutdown under the Fire PRA. This list may contain the safe shutdown (SSD) systems and equipment, internal events PRA systems and equipment or other systems and components due to special considerations such as multiple spurious actuations.
Fire PRA Database	The Fire PRA Database contains the essential information for conducting a Fire PRA. It provides the data structure and functional relationships necessary to correlate the various data elements and generate desired sorts and queries for assessing failures based on the PRA model. The database is populated with equipment, cable, raceway, compartment, and other relevant data needed to support Fire PRA analysis, and provides a structured framework for maintaining the data.
Fire PRA Systems and Equipment	Structures, systems, cables (power, instrumentation and control), and equipment credited for plant shutdown under the fire PRA. This list will typically contain all of the SSD systems and equipment as well as other systems and equipment credited in the internal events PRA, and other systems and equipment subject to unique fire-induced failure modes (e.g., spurious actuation).

Term	Definition
Fire Safe Shutdown Analysis	The deterministic analysis conducted to ensure safe shutdown capability during identified fire scenarios. (i.e., Appendix R of 10 CFR Part 50 analysis at some plants).
Fire scenario	A set of elements that describes a fire event. The elements usually include a room, fire, detection and suppression, targets, and intervening combustibles.
Fire Zone	Fire zones are subdivisions of fire areas, not necessarily bounded by fire barriers. The subdivisions are primarily done based on the fire suppression systems designed to combat particular types of fires. A fire zone may contain one or more fire compartments or a fire compartment may contain one or more fire zones. Examples of fire zones are pump rooms in an elevation of the Auxiliary or Reactor Building.
Fixed Ignition Source	Piece of equipment permanently installed in a fire compartment that causes a fire.
Framework	A conceptual system of tasks or activities used in a specified type of analysis.
Generic fire frequency	Fire frequencies calculated from fire event reports from the U.S commercial nuclear industry stored in Electric Power Research Institute's (EPRI's) Fire Events Database.
Geometric factor	Fraction used to apportion the transient fire frequency in a particular scenario to a predetermined floor area in the compartment. The geometric factor is calculated as the ratio of the area where the fire has to occur to generate the same consequences over the total area of the compartment.
Ground Fault	Synonymous with short-to-ground.
Heat release rate (HRR) or fire intensity	The amount of heat generated by a burning object per unit time. It is usually expressed in kW. A heat release rate profile refers to the behavior of the heat release rate as a function of time (an HRR versus time plot). For example, a fire with a constant heat release rate has an intensity that does not change.
Horizontal radial distance	Horizontal distance measured from the centerline of the fire plume to the item or location of interest.
Hot gas layer	Refers to the volume under the ceiling of a fire enclosure where smoke accumulates and high gas temperatures are observed. It is the upper zone in a two-zone model formulation.
Hot Probe Method	A method of circuit analysis in which the analyst assumes the presence of an energized conductor (the hot probe) capable of causing spurious operation of the circuit under analysis. The hot probe approach postulates that this energized conductor might come into contact with other conductors associated with the circuit under analysis. This method is used to aid the analyst in quickly assessing the potential circuit fault modes that might thereby arise.

Term	Definition
Hot Short	A conductor-to-conductor short in which an energized conductor (source conductor) shorts to a separate, ungrounded conductor (target conductor). A hot short is characterized by an abnormal connection between conductors that does not produce a high fault current because of inherent impedance in the connection path attributable to circuit components. A defining characteristic of a hot short is that it is not detectable by normal circuit protective devices and thus will not trigger an over-current protective action. A hot short has the potential to cause undesired energization of components connected to the target conductor (i.e., spurious actuation); however, the term hot short is not synonymous with the term spurious actuation.
Hot Short, external	A hot short in which the source conductor and target conductor are from separate cables. Synonymous with intercable hot short and cable-to-cable hot short.
Hot Short, internal	A hot short in which both the source conductor and target conductor are of the same multi-conductor cable. Synonymous with intracable hot short.
Human Action	The motion(s), decision(s), or thinking of one or more people required to complete a mission defined by the context of an accident scenario.
Human Error	The failure of a human action modeled in a PRA that results in the failure of a plant function, system, or component. Excludes malevolent behavior.
Human error probability (HEP)	A measure of the likelihood that plant personnel will fail to initiate the correct, required, or specified action or response in a given situation or by commission performs the wrong action.
Human failure event (HFE)	An integrated logic description of HEPs based on the error modes, performance shaping factor assessment, and other qualitative information needed to justify a single input to the risk model. A basic event in the model that represents a failure or unavailability of a component, system, or function that is caused by human inaction or inappropriate action.
Human interaction	A human action or set of actions that affects equipment, response of systems, or other human actions.
Human reliability analysis (HRA)	A structured approach used to identify potential human error events and to systematically estimate the probability of those errors using data, models, or expert judgment.
Human-Induced Initiators	A human error which represents actions taken that cause or lead to an initiator. Example - During testing of Instrumentation & Control (I&C) circuits, the repairman causes a reactor scram.
Ignition Source	Piece of equipment or activity that causes a fire.
Ignition source weighting factor	Fraction used to translate generic fire frequencies for a generic location/ignition source to specific ignition sources within the plant location.
Implementation	The carrying out of a plan or decision according to procedures, training, or knowledge.
Influence factor (maintenance)	Influence factor related to preventive and corrective maintenance (PM/CM) operations in a specific plant location.
Influence factor (occupancy)	Influence factor related to occupancy (continuous, temporary, etc) of specific plant locations.
Influence factor (storage)	Influence factor related to the amount of stored combustibles in a specific plant location.

Term	Definition
Influence factors	Factors affecting frequency of transient fires in plant specific fire areas/compartments. This work package defined three influence factors: storage, maintenance, and occupancy. Influence factors are represented with a number between 0 and 1.
Injection system	Systems that mechanically push fresh air into a room.
Intercable Conductor-To-Conductor Short Circuit	A specific subset of conductor-to-conductor short circuit cable failures wherein the short circuit formed involves the conductors of two or more separate cables.
Internal Events Probabilistic Risk Assessment (PRA)	The current PRA model used by the analyst to model plant responses (i.e., accident sequences) in response to internal event initiators.
Intervening combustibles	Materials that burn but are not ignition sources. These combustibles contribute to the propagation of the fire from the ignition source to the target and are usually located between the ignition source and the target.
Intracable Conductor-To-Conductor Short Circuit	A specific subset of conductor-to-conductor short circuit cable failures wherein all conductors involved in a given short circuit are within a single multi-conductor cable.
Latent (in HRA context)	A test, maintenance, or calibration mission or event that produces equipment unavailability prior to the occurrence of an initiating event.
LERF	The large early release frequency calculated by the Fire PRA plant model. LERF is the product of CLERP and fire initiator.
LERP	The large early release probability with intact trains and/or systems unavailable. LERP is the product of LERF (with one or more intact trains and/or systems unavailable) and a characteristic exposure time (e.g., maximum allowable outage time)
Line Fault	Synonymous with line-to-line fault. A type of short circuit involving an abnormal connection between two energized conductors. The term “line fault” is used to describe a short circuit between two or more phases of a multi-phase power system. A line fault is characterized by an abnormal current flow (fault current) attributable to the lack of any significant circuit burden (i.e., load) between the energized lines. A line fault will trigger over-current protective action for a properly designed circuit. (Note: The term “line fault” is appropriately used for the study and analysis of multi-phase power systems. It is not a relevant term within the context of single phase AC or DC control circuits, and is not synonymous with the term “hot short.”)
Location weighting factor	Fraction used to translate generic fire frequencies for a generic location to specific compartments within the location.
Lower layer	Refers to the volume near the floor of a fire enclosure where colder gases are observed. It is the lower zone in a two-zone model formulation.
Manual trip	A reactor trip that is initiated by the operators in response to an unanticipated condition and in the absence of an automatic trip.
Mechanical ventilation	Gas flows that are forced in or out of a room, usually by a fan.
Mistake (in HRA context)	A human cognitive error typically stemming from failure of diagnosis, decision-making, or planning.
Modeling uncertainty	The uncertainty in the model structure (including phenomenological modeling) of the Fire PRA such as uncertainties associated with whether a component should (or should not) be on the fire critical equipment list, the uncertainty with regard to the location of a specific cable due to missing information, success criteria uncertainty, uncertainty in the hot layer gas temperature for a given fire, etc. These uncertainties may be aleatory or epistemic (or a combination) depending on the specific nature of the uncertainty and the basis for that uncertainty.

Term	Definition
Natural ventilation	Gas flows into or out of the room induced by density differences between the fluids. In enclosure fires, density differences are observed between colder fresh air and hot smoke.
Non-Recovery Human Errors	A human error that represents operator failure to (1) establish alternatives to failed functions, (2) manually restore equipment that has failed to actuate automatically, and (3) repair equipment that is found to be unavailable.
Open Circuit	A loss of electrical continuity in an electrical circuit, either intentional or unintentional. As applied to wire and cable, open circuit faults may result, for example, from a loss of conductor continuity or from the triggering of circuit protection devices (e.g., a blown fuse or open circuit breaker).
Opening Height	In the context of a fire compartment, it is the height of the bottom of an opening relative to the floor.
Operator (in HRA context)	One of the shift operating personnel, or generally, any of a plant's personnel.
Operator (in HRA context)	One of the shift operating personnel, or generally, any of a plant's personnel responsible for performing a desired action.
Performance shaping factor (PSF)	A factor that influences human error probabilities as considered in a PRA's human reliability analysis and includes such items as level of training, quality/availability of procedural guidance, time available to perform an action, etc. A factor that influences the performance of the crew or an operator resulting from the human related characteristics of the plant, the crew, and individual operators. These characteristics include, for example, procedures, training, environmental factors such as visibility, toxic fumes, and smoke,
Permanent Model Changes	Permanent changes to the logic models.
Planning (in HRA context)	The human process of selecting, a strategy the appropriate procedure(s), and assigning a person to accomplish an interaction with the plant.
Post-initiator Human Errors	A human error that represents operator failure to perform required proceduralized actions in responding to an initiator. Examples; incorrectly identifying the initiating event, selecting the wrong procedure, taking more time in diagnosing, planning, or implementing an action than is available.
Pre-initiator human errors	A human error that represents actions taken before the initiating event and that results in unavailability of equipment or systems that is not discovered until it is demanded during response to the initiator. This is also called a latent error, which is hidden or unknown.
Raceway	Any channel that is designed and used expressly for supporting or enclosing wires, cables, or bus-bar. Raceways consist primarily of, but are not restricted to, cable tray, conduit, duct banks, wire ways, flex, pull boxes, junction boxes.
Recovery (in HRA context)	A general term describing restoration and repair acts required to change the initial or current state of a system or component into a position or condition needed to accomplish a desired function for a given plant state.
Recovery action (in HRA context)	A set of human interactions performed to regain equipment or system operability from a specific failure or human error in order to mitigate or reduce the consequences of the failure.

Term	Definition
Recovery models	Types of Human Reliability Models that represent the act, process, or instance of recovering as a probability for use in a fault tree, event tree or cutset.
Required time (in HRA context)	The time that is needed by operators to successfully perform and complete a human action.
Response (in HRA context)	To react to a cue or symptom of an event using procedures to control a function or system.
Response models (in HRA context)	Represent post-initiator Control-Room operator actions, following a cue or symptom of an event, to satisfy the procedural requirements for control of a function or system.
Safe Shutdown (SSD) Systems and Equipment	Structures, systems, cables (power, instrumentation and control), equipment and components within the 10 CFR 50 Appendix R of 10 CFR Part 50 framework identified to achieve and maintain sub-critical reactivity conditions in the reactor, maintain reactor coolant inventory, and maintain safe and stable shutdown conditions following a fire-initiated event. Passive components such as pipes, tanks, heat exchangers and manual valves could be excluded from the analysis if they are known not to be affected by the environment associated with a fire. Electrical components such as power and instrument cables cannot be considered “passive” even if they do not belong to the Appendix R of 10 CFR Part 50 components. Therefore, the effect of fire on such components should be addressed explicitly. Systems and equipment that perform functions needed to achieve and maintain safe shutdown regardless of whether or not the system or equipment is part of the success path for safe shutdown (Per U.S. NRC RG 1.189). Note that, even in the context of a fire PRA, SSD systems and equipment refers to items identified in the context of the plant’s regulatory fire protection compliance program (e.g., Appendix R to 10 CFR 50).
Screening analysis	A qualitative or quantitative analysis that eliminates items from further consideration based on their negligible contribution to the probability of a significant accident or its consequences.
Screening criteria	The values and conditions used to determine whether an item is a negligible contributor to the probability of an accident sequence or its consequences
Sensitivity analysis	An analysis performed to investigate the sensitivity of the variability in model structure or data values on the products of the analysis (e.g., core damage frequency). While often done by changing the model or data value one-at-a-time and determining the change in the analysis products, it may be done changing groups of variables in a logical manner.

Term	Definition
Severity Factor	Severity factor is the probability that fire ignition would include certain specific conditions that influence its rate of growth, level of energy emanated and duration (time to self extinguishment) to levels at which target damage is generated. Probability associated with a specific fire intensity.
Shield	A conductive sheath or wrap around an insulated conductor or group of conductors within a cable. A shield is typically formed of either a metallic foil or a braided sheath of metallic wires. Shields are commonly applied where electromagnetic interference is a potential concern (e.g., communications and instrument circuits).
Short Circuit (general)	An abnormal connection (including an arc) of relatively low impedance between two conductors or points of different potential. A short circuit might involve a ground fault or hot short, as applied to control circuit failures.
Short-to-Ground	A type of short circuit involving an abnormal connection between a conductor and a grounded conducting medium. The grounding medium refers to any conduction path associated with the reference ground of the circuit. This might include structural elements (tray, conduit, enclosures, metal beams, etc) or intentionally grounded conductors of the circuit (neutral conductor). A short-to-ground (ground fault) is characterized by an abnormal current surge (fault current) attributable to the lack of any significant circuit burden (i.e., load). A short-to-ground will trigger over-current protective action for a properly designed circuit.
Slip (in HRA context)	A procedural error (a human error that is a failure in carrying out an intention).
Smoke layer	Refers to the volume under the ceiling of a fire enclosure where smoke accumulates and high gas temperatures are observed. It is the upper zone in a two-zone model formulation.
Source Conductor	The energized conductor of a hot short – the conductor representing the source of energy.
Spurious Operation	A circuit fault mode wherein an operational mode of the circuit is initiated (in full or in part) due to failure(s) in one or more components (including cables) of the circuit.
Surrogate Event	A PRA basic event used to simulate the impact of fire initiators.
Target	Any item that could be affected by the modeled fire. Typically a target is a cable or equipment item that belongs to the PRA equipment list.
Target Conductor	The non-energized conductor of a hot short–usually connected to one or more circuit components. A target conductor is the means by which energy is transferred from an energized conductor to a component in the event of a hot short.
Target Equipment Location Report	A compartment-by-compartment listing of equipment potentially affected by a fire in the compartment. The equipment is tagged as potentially affected by a fire in a compartment if it or any of its circuits (including associated circuits) are located in the compartment.
Taxonomy (in HRA context)	A classification scheme or its results.
Temporary Model Changes	Temporary changes to the logic models that are implemented during the quantification process. The integrity of the logic model is preserved after quantification.

Term	Definition
Time available (in HRA context)	The time period from the presentation of a cue for human action or equipment response to the time of adverse consequences if no action is taken.
Transient combustibles	Combustible materials temporarily in a location that are usually associated with (but not limited to) maintenance or modifications involving combustible and flammable liquids, wood and plastic products, waste, scrap, rags, or other combustibles resulting from the work activity.
Transient fire (ignition source)	A transient combustible burning.
Truncation Limit	Minimum probabilistic cutoff used to quantify logic models. Quantified failure combinations that are below the truncation limit are excluded from the solution results.
Uncertainty	A representation of the confidence in the state of knowledge about the parameter values and models used in constructing the PRA.
Uncertainty analysis	An analysis performed to estimate the level of uncertainty in input variables and the resulting effects of identified uncertainties on the products of the analysis (e.g., core damage frequency). This may be a qualitative or quantitative analysis. For quantitative analyses of data values used in the PRA, propagating the input uncertainties through the Fire PRA with the use of Monte Carlo simulation and similar techniques is a common practice.
Upper Layer	Refers to the volume under the ceiling of a fire enclosure where smoke accumulates and high gas temperatures are observed. It is the upper zone in a two-zone model formulation.
Ventilation rate	Amount of air, usually measured in m^3/sec, injected or extracted by a mechanical ventilation system into or from a location, respectively.
Via, Cable	Synonymous with “Raceway.”
Walkdown	Inspection of local areas in a nuclear power plant where systems and components are physically located in order to ensure accuracy of procedures and drawings, equipment location, operating status, and environmental effects or system interaction effects on the equipment which could occur during accident conditions.
Zone models	Refers to two-zone models. A model that divides a room into two thermodynamic control volumes or zones: an upper layer of buoyant gases and a lower layer of relatively fresh air that remains near the floor. Conditions within each zone are assumed uniform, and the zones are separated by a distinct interface. Mass, species, and energy conservation equations are applied to each zone to determine the average temperature and gas composition.
Zone of Influence (ZOI)	A volume surrounding an ignition source where all intervening combustibles and targets may be adversely affected by a fire initiated by the ignition source.

Appendix A

Appendix for Chapter 2, Technical Bases

A
APPENDIX FOR CHAPTER 2, TECHNICAL BASES

The Task 2 procedure determines the equipment to include in the Fire PRA. Information about the equipment is put into the Fire PRA Database (see Support Task B). The list of Fire PRA equipment is the source for performing the cable identification and location activity in Task 3, and is the basis for what will be included in the Fire PRA Model starting with Task 5, as modified in subsequent tasks. The procedure has inherently included three underlying bases in order to identify the Fire PRA equipment of interest. These three bases are described below.

A.1 Use of the Internal Events PRA and the Fire Safe Shutdown Analysis as the Primary Technical Inputs

The product of this task, the Fire PRA Equipment List, is developed on the basis of two primary technical inputs, and further modified by three important technical activities. These two primary technical inputs consist of (1) the Internal Events PRA and (2) the Fire Safe Shutdown Analysis. For the most part, the Fire PRA, and hence the Fire PRA Equipment List, will be based on the Internal Events PRA, as modified by the Fire Safe Shutdown Analysis and other considerations.

Caution About Limiting the Scope of the Fire PRA

If the analysts purposely choose to limit the scope of the Fire PRA to less than that covered in the Internal Events PRA plus fire effects (e.g., limit the scope to just Fire Safe Shutdown or Appendix R of 10 CFR Part 50 equipment), this may result in trading-off the effort to locate cabling for and performing the analysis of other systems in the PRA for a higher CDF/LERF, since not all the Internal Events PRA modeled equipment would be credited. By giving no credit to other systems or specific equipment items, the analyst is effectively assuming 1.0 failure of that system, train, or component. If the scope of the Fire PRA is limited, the following considerations (illustrated by an example) need to be included to ensure the resulting analysis is conservative.

Suppose it was decided that high pressure injection would not be included in the Fire PRA because it is not part of the Fire Safe Shutdown equipment. There is the potential to miss two possible effects on the fire risk. First, there may be a tendency to not consider, compartments that contain ONLY high-pressure injection equipment, or the high-pressure injection equipment may not be included as sources for various fires and the overall fire frequency for the plant, thereby underestimating the cumulative fire risk for the entire plant. Consistent with Tasks 4 and 6, such compartments should be considered and HPI-source fire frequencies developed, even though the HPI system is not going to be credited as a mitigation feature in the limited scope Fire PRA. Second, if it is possible that fire-induced equipment failures, or especially spurious actuations or indications associated with high pressure injection, could affect (a) other systems that are being

modeled (and credited) and/or (b) operator performance being modeled (and credited) in responding to the fire (e.g., spurious HPI operation could cause additional confusion and/or delay of appropriate credited responses), there may be a tendency to not identify such effects, thereby potentially underestimating the overall fire risk.

To address such concerns, the following should be done when limiting the scope of the Fire PRA so that portions of the Internal Events PRA are purposely not included.

1. The fire sources associated with the equipment not addressed in the Fire PRA and the resulting fire frequencies should be accounted for, especially if the fire frequencies are as high or higher than that assessed for many of the other fire sources/compartments.

2. There should be sufficient review of the equipment items that *are* being credited in the Fire PRA (by looking at their interfaces with other systems or equipment items and via associated circuits reviews) to ensure that failures and especially spurious events associated with those equipment items not being analyzed cannot introduce failures of the credited equipment items that are not already accounted for (this may have been adequately done already as part of the Fire Safe Shutdown analysis).

3. There should be at least some global (if not specific) accounting for the possible additional workload, potential distractions or confusion and associated time sinks, as well as other possible effects on operator performance that might occur as a result of failures and/or spurious events associated with equipment items that are otherwise not credited/addressed in the Fire PRA. For instance, suppose HPI is not being modeled, yet spurious operations associated with this system (e.g., pumps starting and/or stopping, valves closing) could delay other credited operator actions (i.e., the actions included in the Fire PRA Model) because some time and effort will likely be expended dealing with the spurious HPI activity. Unless there is a way to specifically identify when and what spurious events may be particularly troublesome (such as by tracing down a limited number of cables on a limited number of HPI equipment to know which compartments present such problems), at least some global effect should be estimated and justified (e.g., affected human error probabilities for actions that are credited in the Fire PRA will be increased by a factor of five in an attempt to globally account for these undefined possible effects).

A.1.1 Basis

These two inputs provide the most useful and comprehensive building blocks available to the analyst to begin developing the Fire PRA Model and the associated Fire PRA Equipment List. From the perspective of the Fire PRA, the Internal Events PRA should satisfy much of what will be included in the analysis, since it already includes all the typical PRA considerations, assumptions, and other nuances associated with building any PRA model. Further, it is already best-estimate based, which is an underlying principle of the updated fire analysis. It also appropriately credits more than one train of equipment in the plant while properly accounting for the probability of failing any/all equipment included in the model. Finally, it determines success based on realistic and minimum needs (e.g., stable hot shutdown is most times sufficient), which is adequate in determining significant fire risks since the risks should be dominated by early responses during the fire event before the plant is restabilized.

The Internal Events PRA does, however, need to be modified to account for differences in performing a fire risk analysis as opposed to an analysis of internal events. Sequences not very relevant to fire scenarios are eliminated on the basis of low probability of coincidental events; for example, a fire and a LOCA (due to pipe break) at the same time. While perhaps credible, such coincidental independent events should not dominate the fire risk, and hence are eliminated early in the task. Additionally, and since the Fire Safe Shutdown Analysis represents another existing fire analysis of the plant, it is important that differences between it and the development of the Fire PRA be reconciled and, where appropriate, Fire Safe Shutdown Analysis considerations be added to the Fire PRA and the Fire PRA Equipment List.

Where the scope of the Fire PRA will not include all that is covered in the Internal Events PRA, it is important that the resulting analysis is conservative. The above text describes two ways that the exclusion of certain equipment might actually lead to a nonconservative result. This is unacceptable when limiting the scope of the analysis, and steps should be taken to avoid an optimistic conclusion about the fire risk. The steps to be taken are specifically identified above, and will ensure the Fire PRA results are not optimistic because of the lack of analytical treatment.

A.2 Necessary Modifications/Additions to the Fire PRA Equipment List

Three additional and very important technical considerations should be included in the development of the Fire PRA Equipment List.

- Equipment whose fire-induced failure could cause an automatic or forced manual trip of the plant.
- Equipment that either supports the success of safety functions or whose spurious actuation or other fire-induced failure modes could adversely affect the success of the safety functions credited in the Fire PRA, or both. In some cases, the same equipment might also cause an automatic or forced manual trip of the plant.
- Instrumentation or other diagnostic equipment that either supports successful operator actions or whose spurious operation or other fire-induced failure modes could induce inappropriate or otherwise harmful actions by the operator, or both.

A.2.1 Basis

The fire risk is expected to be dominated by fires that cause an initiating event followed by subsequent successes and failures of equipment and operator actions, some of which may be influenced by fire damage. It is not expected that accident sequences involving an independent initiator followed by a fire will dominate, since the exposure time for the fire is short (e.g., 24 hours) for the safe shutdown of the plant. The short exposure time makes such sequences less frequent than those involving a fire as the initiating event (with a yearly exposure time). For this reason, it is important to identify how fires can cause initiating events, the type of initiating event that is caused in each case (e.g., loss of offsite power, loss of service water, etc.), and the locations where fires can cause initiating events. A central part of this process is to identify equipment (and its associated cables) that can fail because of a fire that causes an automatic trip of the plant or a forced manual trip because of plant procedures. Hence, it is important that the

Internal Events PRA and the associated equipment be expanded to include equipment important in the Fire PRA because the equipment can be the source of an initiating event. Without such an exercise, the initiating event potential for the Fire PRA could be incomplete and the Fire PRA results, therefore, too optimistic.

The search for this equipment is at least expected to define single equipment items (or group of equipment defined as a single entity, such as a "train" of equipment); for example, a single bus, single service water train, etc. If such losses will cause an automatic trip or a forced manual trip per procedure, such equipment needs to be on the Fire PRA equipment List so that its locations, and the locations of associated cables, can be identified. Cases can be identified where it takes multiple equipment items to fail to cause an initiating event (e.g., it takes two buses to fail, or it takes one train of service water and one bus failure feeding the opposite train). To expand the search for these "multiple failures" can easily make the search unbounded and impractical. Hence, while the search for fire-induced initiators should not necessarily be limited to finding single failure cases, it is expected that the search for multiple failure initiating events account for those cases where it is already known, or can be easily discerned based on broad knowledge of what is in each plant compartment, that the multiple equipment items share common locations and are potentially susceptible to the same fire. There is no technical basis for limiting the search to these considerations, other than it quickly becomes impractical and nearly intractable and would be well beyond the current state of the art and past common practices. Hence, while a limiting feature of the analysis, it is recognized as a practical limitation that makes the analysis incomplete and somewhat optimistic.

From the plant response point of view, fire has the unique characteristic to potentially affect multiple desired equipment functions, as well as causing spurious operation of equipment so that success of safety functions are jeopardized and/or operator response actions are affected by failing to take the desired action or inducing an unsafe action by the operator. As a result, it is also necessary to expand the Fire PRA Equipment List to explicitly include the above categories of equipment. Whereas spurious operation or failure of equipment in the Internal Events PRA may often be too low in probability to model, multiple fire-induced failures of this type may be sufficiently probable that they should be considered. Similarly, while the Internal Events PRA often does not explicitly model instrumentation needed or which could otherwise affect operator action, fire-induced failures of this instrumentation could significantly alter the success-failure probabilities of credited human actions in a fire, as well as induce undesirable or unsafe actions on the part of the operator. This equipment and their possible failure should therefore be explicitly accounted for when performing the Fire PRA.

A.3 Consideration of a Reasonable Number of Spurious Events

One element of this procedure is attempting to define a practical limitation on the number of fire-induced electrical-related failures considered during the search for spurious operation/failure of equipment within a single system or associated with a single operator action, that could either directly affect the success of a safety function or operator response during a fire accident sequence. There is no apparent, sound, technical basis that can set a specific limit; i.e., tests have shown that multiple failures, including "hot shorts," are sufficiently probable, so multiple failures cannot be ignored. But there are considerations that can be included in the analyst's thinking when considering how many simultaneous spurious events to include. These are discussed below.

A.3.1 Basis

It has been recognized on the basis of test data and analysis [A.1] that more than one simultaneous spurious event can occur during a fire with nontrivial probability (e.g., consensus opinions on the order of 0.3 chance of any one circuit spuriously operating). Hence, the fire analysis, and this procedure, consider multiple spurious events at the same time. Like the initiating event discussion above, the search for and inclusion of multiple equipment failures involving spurious events during a fire scenario can easily make the effort unbounded and impractical. Hence, the question becomes, how many should be considered?

Unfortunately, consensus opinions like the above do not allow a probabilistic argument to define a limit on how many multiple spurious events should be considered. The short answer is, consider as many as resources and other practical constraints will allow.

But there are considerations that can be included in the analyst's thinking when searching for simultaneous spurious events that should be included in the Fire PRA and thus the Fire PRA Equipment List. To the extent these considerations provide a strong argument for eliminating some equipment from consideration, they can help justify why certain simultaneous spurious events (and equipment) have not been included. This list assumes that cable locations for the equipment are not yet known or cannot be quickly determined so that arguments cannot already be made on the basis of nonshared locations. These are

- The results in NUREG/CR-6776 [A.2] suggest that thermoplastic cables are not very susceptible to prolonged (minutes) failures where voltage/current is continually applied to the circuit, allowing equipment to change state or instrumentation to fail in a "believable" and prolonged fashion. If it is known that the circuits involve thermoplastic cables, the analyst may consider eliminating such circuits from concern.
- The results in NUREG/CR-6776 [A.2] suggest that the failure durations are typically a few minutes to an order of 10 minutes in length. If it can be shown that, when considering these typical duration times, the effect on the system equipment or the operator would be minimal because the duration time is too short to cause the undesired system effect or to fool the operator into taking an unsafe action, the analyst may consider eliminating such circuits from concern. This should be discussed with an HRA analyst and/or operations staff member for concurrence that the operator would not be likely fooled).
- For instrumentation, if it is known that a set bias exists such that the instrument would likely fail in an extreme high or low condition and thus be obviously determined by the operator to be erroneous, the analyst may consider eliminating such circuits from concern. Tthis should be discussed with an HRA analyst and/or operations staff member for concurrence that the error would be obvious).
- Digital type circuits tend to either be good or the signal is lost (i.e., they do not tend to fail in a believable but degraded fashion). Hence, the analyst may consider eliminating such circuits from concern.
- In examining multiple spurious events, an advisable analytical technique is to assume that a single spurious event results in the adverse situation actually caused by multiple spurious actuations. If the single spurious event can be screened out on the basis of overall scenario probability (such as via running the model) and/or insignificant consequence arguments, there is no further need to investigate the multiple spurious situation(s).

A.4 References

A.1 *Spurious Actuation of Electrical Circuits Due to Cable Fires: Results of an Expert Elicitation*, May 2002. EPRI Report 1006961.

A.2 *Cable Insulation Resistance Measurements Made During Cable Fire Tests*, June 2002. NUREG/CR-6776.

Appendix B

Appendix for Chapter 3, Example

B
APPENDIX FOR CHAPTER 3, EXAMPLE

This appendix contains a simple example of the fire PRA cable selection process. The example includes two fire PRA components. Prior to conducting the cable selection analysis, the analyst determines that these two components were not included in the Appendix R of 10 CFR Part 50 analysis, and thus need new component analyses (i.e., Step 2.3, Case 2). Furthermore, it is also discovered during the process of evaluating prerequisite information (Step 1) that the plant's cable routing database system contains location and raceway data related to both components.

The strategies and rules governing the cable selection process (Step 2) are then developed and documented in a plant-specific procedure. Following the Case 2 methodology, the analyst collects applicable drawings and documents for each component. The analyst also assembles the information for each component into separate work packages. Figure B-1 shows the block diagrams for the two components (Pump 3CHS*P3A and Valve 3CCE*SOV37A). The pump has only one cable associated with it (Cable 3CHSAOH350), while the valve has two cables necessary for its operation (Cables 3CCEAOC611 and 3CCEAOX237).

The one-line diagrams (Step 3) are also reviewed to identify the power supplies for each of the two components. A review of the relevant coordination studies (Step 4) reveals that each component's branch circuit is sufficiently protected and coordinated with the feeder circuit. Hence, no associated circuits are identified for either of the components.

The analyst then uses the information in the CRS to determine the raceways and raceway routing associated with each cable. Table B-1 shows the resulting compilation of this data (Step 5).

As part of performing the activities of Step 6, the analyst generates the Fire PRA Cable List and the Target Equipment Location Reports on a compartment-by-compartment basis (see Table B-2). Finally, a summary table of component location vulnerabilities is developed. Table B-3 shows an example of the summary.

The analyst completes the evaluation by including in the 3CHS*P3A and 3CCE*SOV37A analysis packages the drawings, worksheets, tables and results generated during the process.

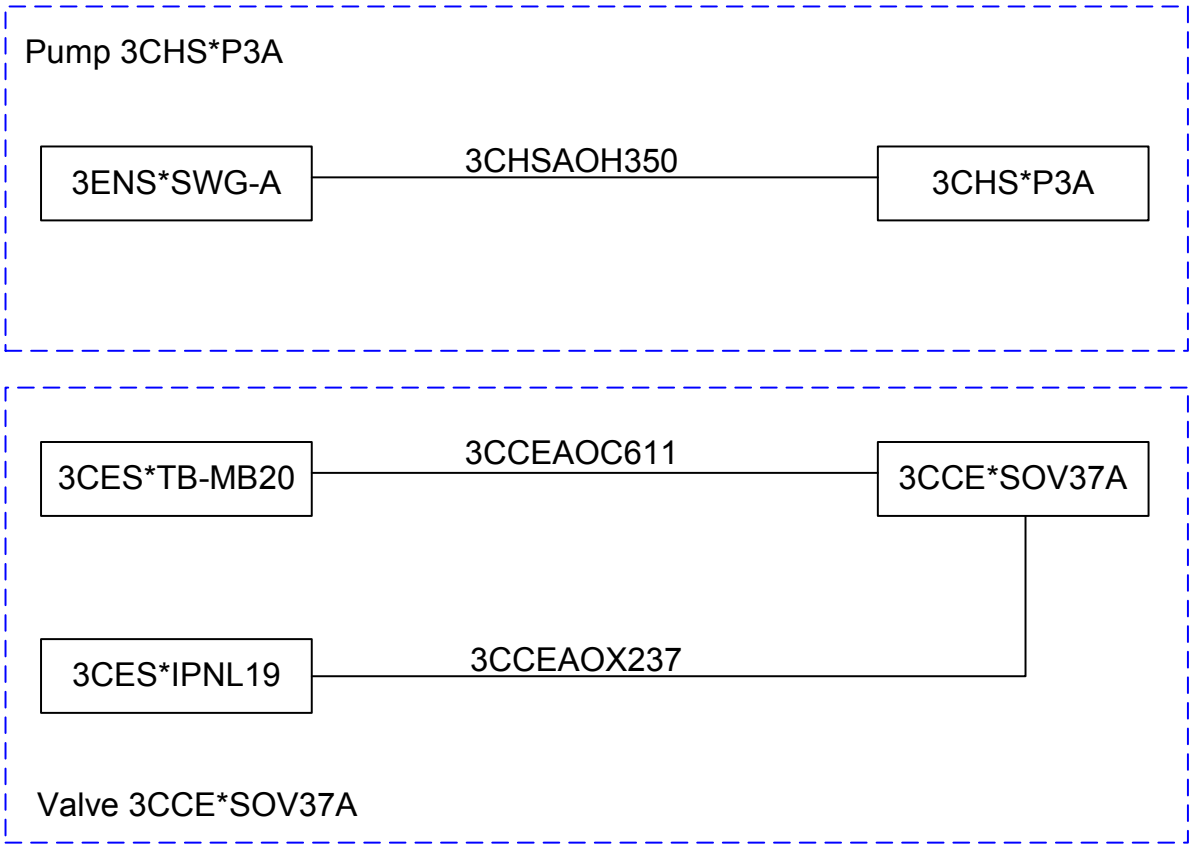

Figure B-1
Example Cable Block Diagrams

Table B-1
Example Fire PRA Cable Data

Equipment ID	Cable ID	Cable Function	Vias	Compartment	From	To
3CHS*P3A	3CHSAOH350	Power	3CH404OD	CB-2-X	3ENS*SWG-A	
			3TH404O	CB-2-X		
			3TH403O	CB-2-X		
			3TH402O	CB-2-X		
			3TH301O	SB-2		
			3TH302O	SB-2		
			3TH106O	AB-5-Y		
			3TH103O	AB-5-Y		
			3TH104O	AB-5-Y		
			3TH202O	AB-1-D		
			3CH202OA	AB-1-D		3CHS*P3A

Table B-1
Example Fire PRA Cable Data (Continued)

Equipment ID	Cable ID	Cable Function	Vias	Compartment	From	To
3CCE*SOV37A	3CCEAOC611	Control	3FC437O01	CB-11-A	3CES*TB-MB2O	
			3CC417OA	CB-8		
			3TC406O	CB-8		
			3TC419O	CB-2-X		
			3TC449O	CB-2-X		
			3TC303O	SB-2		
			3TC302O	SB-2		
			3TC301O	SB-2		
			3TC300O	SB-2		
			3TC103O	AB-5-Y		
			3WC211O02	AB-5-Y		
			3JB*2303	AB-1-D		
			3CC932OF	AB-1-D		3CCE*SOV37A
	3CCEAOX237	Instrument	3FX431O01	CB-11-A	3CES*IPNLI9	
			3CX950OG3	CB-8		
			3JB*4205	CB-8		
			3CX950OG4	CB-8		
			3JB*4300	CB-8		
			3CX400OA	CB-8		
			3TX400O	CB-2-X		
			3TX303O	SB-2		
			3TX301O	SB-2		
			3TX300O	SB-2		
			3TX106O	AB-5-Y		
			3CX106OL	AB-5-Y		
			3WX211O05	AB-1-D		
			3JB*2303	AB-1-D		
			3CX933OA	AB-1-D		3CCE*SOV37A

Table B-2
Example Target Equipment Location Reports

Fire Compartment: AB-1-D		
Equipment ID	**Cable ID**	**Raceways**
3CHS*P3A	3CHSAOH350	3TH202O, 3CH202OA
3CCE*SOV37A	N/A	(Component in compartment)
3CCE*SOV37A	3CCEAOC611	3CC932OF, 3JB*2303
3CCE*SOV37A	3CCEAOX237	3CX933OA, 3JB*2303, 3WX211O05

Fire Compartment: AB-5-Y		
Equipment ID	**Cable ID**	**Raceways**
3CHS*P3A	3CHSAOH350	3TH106O, 3TH103O, 3TH104O
3CCE*SOV37A	3CCEAOC611	3WC211O02, 3TC103O
3CCE*SOV37A	3CCEAOX237	3CX106OL, 3TX106O

Fire Compartment: SB-2		
Equipment ID	**Cable ID**	**Raceways**
3CHS*P3A	3CHSAOH350	3TH301O, 3TH302O
3CCE*SOV37A	3CCEAOC611	3TC300O, 3TC301O, 3TC302O, 3TC303O
3CCE*SOV37A	3CCEAOX237	3TX300O, 3TX301O, 3TX303O

Fire Compartment: CB-2-X		
Equipment ID	**Cable ID**	**Raceways**
3CHS*P3A	3CHSAOH350	3CH404OD, 3TH404O, 3TH403O, 3TH402O
3CCE*SOV37A	3CCEAOC611	3TC449O, 3TC419O
3CCE*SOV37A	3CCEAOX237	3TX400O

Fire Compartment: CB-8		
Equipment ID	**Cable ID**	**Raceways**
3CCE*SOV37A	3CCEAOC611	3TC406O, 3CC417OA
3CCE*SOV37A	3CCEAOX237	3CX400OA, 3JB*4300, 3CX950OG4, 3JB*4205, 3CX950OG3

Fire Compartment: CB-11-A		
Equipment ID	**Cable ID**	**Raceways**
3CCE*SOV37A	3CCEAOC611	3FC437O01
3CCE*SOV37A	3CCEAOX237	3FX431O01

Table B-3
Example Equipment Location Vulnerability Summary Report

Equipment ID	Cable ID	Plant Compartment					
		AB-1-D	AB-5-Y	SB-2	CB-2-X	CB-8	CB-11-A
3CHS*P3A	N/A	X					
3CHS*P3A	3CHSAOH350	X	X	X	X		
3CCE*SOV37A	N/A	X					
3CCE*SOV37A	3CCEAOC611	X	X	X	X	X	X
3CCE*SOV37A	3CCEAOX237	X	X	X	X	X	X

Appendix C

Appendix for Chapter 6, Determination of Generic Fire Frequencies

C
APPENDIX FOR CHAPTER 6, DETERMINATION OF GENERIC FIRE FREQUENCIES

A generic set of fire frequency distributions were developed. The frequencies presented in this Appendix replace those documented in EPRI in TR-1003111 [C.1]. The new generic frequencies are based on the assumption that there is plant-to-plant variability in the likelihood of experiencing fires. The "Two-Stage Bayesian" methodology [C.2] was used to model the variability, which led to wider uncertainty ranges for the fire frequencies than those presented in [C.1]. This Appendix is intended to describe the methodology used to estimate the revised frequencies and present the 5th, 50th and 95th percentiles of related uncertainty distributions.

The generic frequency model utilizes fire location/ignition source bins to estimate fire ignition frequencies. Each bin represents a set of operating experience events at a particular location/ignition source in U.S. nuclear power plants (NPPs). Each record in the EPRI Fire Events Database (FEDB) was evaluated and included accordingly in the frequency model is assigned to a bin. Note that the location bins consider all major locations in U.S. nuclear power plants. An additional bin, plant wide components, is included to account for ignition sources that cannot be assigned to a particular plant location.

The classification of fire events is further divided into power and low-power operation. This classification is used to determine fire frequencies in location/ignition source bins that reflect relevant changes in terms of fire protection based on the mode of operation at the time. Only one frequency is estimated in location/ignition source bins where the hazards related to fire protection are similar during power and low-power operation. In this later case, the fire events at power and low-power operation are combined.

The location/ignition source bin approach in the frequency model is used to provide a better characterization of fires in the nuclear power plants. This provides a logical tie into modeling consequences of fires by distinguishing between various fires. In addition, characterizing the fire source is critical in risk-informed/performance-based applications and identifying opportunities to improve fire protection design and practice.

C.1 Methodology Summary

The methodology employed to estimate generic fire frequencies (λ_{IS}) attempts to model the plant-to-plant variability that can be attributed to sources like the number of ignition sources, housekeeping practices, and fire event recording or reporting practices.

This approach is particularly important, since the FEDB is based on inconsistent recordkeeping and reporting practices. These inconsistencies, for the most part, are related to the quality of the data in terms of content and completeness. Completeness refers to the fires that were potentially unreported and therefore not included in the database. Content refers to the amount and accuracy of the information in the records provided by the data sources.

Regarding completeness of the database, the current version of the EPRI FEDB contains a wide range of fire reports from various U.S. commercial nuclear power plants ranging from 0.1 to over 6 fire reports per reactor-year, and covering fires in all different modes of operation. This variation can be attributed to two factors: fire event recording at each facility and its data collection process. Even with considerable effort and using multiple avenues for data collection, the process does not ensure that records of all fires in the industry are included in the EPRI FEDB. No attempt has been made to estimate the number of fires events that EPRI has been unable to collect.

Regarding the content of data records, the amount and quality of information related to each fire event varies throughout the database. Institute for Nuclear Power Operations (INPO), NEIL, NRC, and the different utilities in the industry have different templates to document fire events, which consequently affects the consistency of the records. In some cases, details about fire events are collected from accident descriptions where fires are only a part of the larger objective of the recordkeeping effort. Variations in the personal styles in event reports also influences the level of information provided.

To capture the uncertainties associated with plant-to-plant variability in the generic fire frequency estimates, the data in FEDB was treated as if generated by nonhomogeneous sources. In other words, each nuclear power plant is considered different in terms of recording and reporting fire events to appropriate organizations (NRC, etc.) and supplying recorded events to EPRI.

Using mathematical notation, according to the data treatment discussed above, the fire events in FEDB are classified as follows:

$$E = \{(k_i, T_i) \quad i = 1,..., N\},$$

where

k = the number of fire events in a location or associated to an ignition source bin,
T = associated number of reactor years,
i = a specific NPP unit *i*, and
N = total number of NPP units in the U.S.

This data is used as evidence in the calculation of a probability distribution for the generic fire frequency using two-stage Bayesian formulations.

In the two-stage Bayesian approach, a prior distribution should be established to allow the calculations for the first stage to estimate the generic fire frequencies. The prior distribution represents the knowledge about fire frequencies before the evidence is available. The prior distributions were selected by a panel of experts experienced in the use of two-stage Bayesian approach and in estimating fire frequencies. The range of frequencies covered by the prior encompasses all possible fire frequencies expected by the panel of experts. Assuming a lognormal distribution, the prior is selected using the following two-parameter values:

- 5th percentile of the fire frequency, and
- 95th percentile of the fire frequency.

Finally, using the prior distributions determined by the expert panel and the fire event evidence available in FEDB, the generic frequencies were calculated using a computer program designed specifically for Beyesian analysis. Table C-1 lists the specific inputs for R-DAT, the computer program utilized for calculating the generic frequencies using the Bayesian approach.

C.2 Screening Events for Inclusion in the Calculation of Generic Fire Frequencies

Events contained in the FEDB were screened for inclusion into (or exclusion from) the basic or nominal fire event frequency calculation based on two general considerations. The first consideration is when and where the fire occurred. The second consideration is whether or not a given event either did or could have presented a threat to nuclear safety (potentially challenging fires).

C.2.1 Where and When a Fire Occurred

The fire PRA as described in these procedures considers the impact of fires occurring during normal power operations and excludes consideration of other modes of plant operation (e.g., shutdown). Hence, fires were included in the fire frequency calculation only if they occurred during power operations or low-power operations, such as plant start-up. Fires that had occured during other modes of operation, including cold shutdown, construction, and refueling, were excluded from the fire frequency calculation.

A second criterion for event screening considered where the fire occurred. The fire risk quantification is concerned with fires that might impact plant safe operations through the failure of one or more plant components or functions. Hence, fires that have no potential to directly impact plant components or functions were eliminated. This would include fires that occur off-site, or on-site in areas that are not associated with either the nuclear or power generation blocks of the plant. Examples of excluded fires include, but are not limited to, those occurring in parking lots outside the protected area, strictly administrative areas or buildings, detached warehouses or storage facilities, offsite switchyards, or temporary structures associated with plant construction.

C.2.2 Potentially Challenging Events

The second stage of event screening considered whether on not a particular event did, or had the potential to, challenge plant nuclear safety. The intent of this step is to identify reported events involving an incipient fire, fire ignition event, or explosion event that had the potential to develop into a self-sustaining fire. Events that lack this potential were screened out from the fire frequency calculation.

It is vital to recognize that the event screening process is not based on assessing the actual severity of any given event, although this is a consideration in the screening process. Events that involved fires of low severity (in the classical sense of low fire intensity and/or minimal spread or damage) were included in the fire frequency calculation if they had the potential to become a challenging fire under other circumstances–hence the terminology, “potentially challenging.”

Table C-1
Summary of Prior Distributions used in RDAT

ID	Location	Ignition Source	Prior Distribution		R-Dat Parameter		R-Dat Parameter	
			Min	Max	Median	Error Factor (EF) for Median	EF	EF for EF
1	Battery Room	Batteries	1.0E-06	1.0E+00	1.0E-03	10	10.0	10.0
2	Containment (PWR)	Reactor Coolant Pump	1.0E-06	1.0E+00	1.0E-03	10	10.0	10.0
3	Containment (PWR)	Transients and hotwork	1.0E-06	3.0E-01	5.5E-04	10	7.4	7.4
4	Control Room	Main Control Board	1.0E-06	3.0E-01	5.5E-04	10	7.4	7.4
5	Control/Auxiliary/ Reactor Building	Cable fires caused by welding and cutting	1.0E-06	1.0E+00	1.0E-03	10	10.0	10.0
6	Control/Auxiliary/ Reactor Building	Transient fires caused by welding and cutting	1.0E-06	3.0E+00	1.7E-03	10	13.2	13.2
7	Control/Auxiliary/ Reactor Building	Transients	1.0E-06	3.0E+00	1.7E-03	10	13.2	13.2
8	Diesel Generator Room	Diesel generators	1.0E-06	3.0E+00	1.7E-03	10	13.2	13.2
9	Plant-Wide Components	Air Compressors	1.0E-06	1.0E+00	1.0E-03	10	10.0	10.0
10	Plant-Wide Components	Battery Chargers	1.0E-06	1.0E+00	1.0E-03	10	10.0	10.0
11	Plant-Wide Components	Cable run (Self-ignited cable fires)	1.0E-06	3.0E-01	5.5E-04	10	7.4	7.4
12	Plant-Wide Components	Cable fires caused by welding and cutting	1.0E-06	1.0E+00	1.0E-03	10	10.0	10.0

Table C-1
Summary of Prior Distributions used in RDAT (Continued)

ID	Location	Ignition Source	Prior Distribution		R-Dat Parameter		R-Dat Parameter	
			Min	Max	Median	Error Factor (EF) for Median	EF	EF for EF
13	Plant-Wide Components	Dryers	1.0E-06	1.0E+00	1.0E-03	10	10.0	10.0
14	Plant-Wide Components	Electric motors	1.0E-06	1.0E+01	3.2E-03	10	17.8	17.8
15	Plant-Wide Components	Electrical cabinets	1.0E-06	1.0E+01	3.2E-03	10	17.8	17.8
16	Plant-Wide Components	High energy arcing faults	1.0E-06	3.0E-01	5.5E-04	10	7.4	7.4
17	Plant-Wide Components	Hydrogen Tanks	1.0E-06	3.0E-01	5.5E-04	10	7.4	7.4
18	Plant-Wide Components	Junction box	1.0E-06	3.0E+00	1.7E-03	10	13.2	13.2
19	Plant-Wide Components	Misc. Hydrogen Fires	1.0E-06	1.0E+00	1.0E-03	10	10.0	10.0
20	Plant-Wide Components	Off-gas/H2 Recombiner (BWR)	1.0E-06	1.0E+00	1.0E-03	10	10.0	10.0
21	Plant-Wide Components	Pumps	1.0E-06	3.0E+00	1.7E-03	10	13.2	13.2
22	Plant-Wide Components	RPS MG sets	1.0E-06	1.0E+00	1.0E-03	10	10.0	10.0
23	Plant-Wide Components	Transformers	1.0E-06	3.0E+00	1.7E-03	10	13.2	13.2

Table C-1
Summary of Prior Distributions used in RDAT (Continued)

ID	Location	Ignition Source	Prior Distribution		R-Dat Parameter		R-Dat Parameter	
			Min	Max	Median	Error Factor (EF) for Median	EF	EF for EF
24	Plant-Wide Components	Transient fires caused by welding and cutting	1.0E-06	1.0E+01	3.2E-03	10	17.8	17.8
25	Plant-Wide Components	Transients	1.0E-06	1.0E+01	3.2E-03	10	17.8	17.8
26	Plant-Wide Components	Ventilation Subsystems	1.0E-06	3.0E+00	1.7E-03	10	13.2	13.2
27	Transformer Yard	Transformer - Catastrophic	1.0E-06	3.0E-01	5.5E-04	10	7.4	7.4
28	Transformer Yard	Transformer - Non-Catastrophic	1.0E-06	1.0E+00	1.0E-03	10	10.0	10.0
29	Transformer Yard	Yard transformers (Others)	1.0E-06	1.0E+00	1.0E-03	10	10.0	10.0
30	Turbine Building	Boiler	1.0E-06	1.0E+00	1.0E-03	10	10.0	10.0
31	Turbine Building	Cable fires caused by welding and cutting	1.0E-06	3.0E+00	1.7E-03	10	13.2	13.2
32	Turbine Building	Main feedwater pumps	1.0E-06	1.0E+00	1.0E-03	10	10.0	10.0
33	Turbine Building	Turbine generator (T/G) Excitor	1.0E-06	1.0E+00	1.0E-03	10	10.0	10.0
34	Turbine Building	T/G Hydrogen	1.0E-06	1.0E+00	1.0E-03	10	10.0	10.0
35	Turbine Building	T/G Oil	1.0E-06	3.0E+00	1.7E-03	10	13.2	13.2
36	Turbine Building	Transient fires caused by welding and cutting	1.0E-06	1.0E+01	3.2E-03	10	17.8	17.8
37	Turbine Building	Transients	1.0E-06	1.0E+01	3.2E-03	10	17.8	17.8

A common example is hot-work fires that are quickly suppressed by a fire watch. These events were retained in the fire frequency calculation for hot-work fires if the fire was self-sustaining and required active intervention by some means of suppression (e.g., the fire watch) in order to prevent further development of the fire. The likelihood that prompt suppression might occur given a hot-work fire was treated separately in the analysis of fire detection and suppression.

The criteria for identifying potentially challenging events includes objective and subjective elements. The objective criteria are based on reportable facts related to the means of fire suppression, the extent of fire growth and/or damage, fire duration, and other indicators. The objective criteria are applied in a mechanical manner–i.e., yes/no checkboxes. The subjective criteria involve the application of judgment. Factual information related to the objective criteria is often lacking in the event reports. Hence, the analysis should also use judgment to determine whether or not the event was potentially challenging, typically based on a review of the descriptive text provided for the event.

Each event was first classified as "potentially challenging," "not challenging," or "undetermined." Events classified as not challenging are those where it can be determined with reasonable certainty that the criteria reflecting a potentially challenging event were not met. Events where the information was found insufficient to make a determination were classified as unknown.

The criteria for classifying fire events are provided in Section C.2.3.

C.2.3 Criteria for Classification of Fire Events

C.2.3.1 Objective Classification Criteria

A fire event was classified as potentially challenging if any one of the following is true.

- A hose stream, multiple portable fire extinguishers, and/or a fixed fire suppression system (either manually or automatically actuated) were used to suppress the fire.
- One or more components outside the boundaries of the fire ignition source were affected where the term "outside the boundaries of the fire ignition source" will depend to some degree on the specific ignition source (see for further discussions below).
- Combustible materials outside the boundaries of the fire ignition source were ignited (with a similar use of the term "outside the fire ignition source" implied).

A fire event was also classified as potentially challenging if two or more of the following features are cited in an event report:

- Actuation of an automatic detection system,
- A plant trip was experienced,
- A reported loss of greater than $5,000 (not including any lost business damages), or
- A burning duration or suppression time of 10 minutes or longer.

With regard to the term "outside the boundaries of the fire ignition source," the intent is to establish the frequency of fires that might cause a threat beyond the boundaries of the ignition source. However, what exactly one means by the boundaries of the ignition source may need some use of judgment. This term is relatively obvious when applied to a familiar scale–i.e., to objects of an ordinary size. However, if applied with an excess of literal interpretation to very large (e.g., the turbine generator or a diesel generator) or very small objects (e.g., an individual resistor on a circuit card), the intent can be misconstrued. The following provides case-specific examples to illustrate the intent.

- For self-ignited cable fires: Any fire where the failure of, or an overload on, one cable caused at least one other cable to ignite and/or fail should be identified as potentially challenging.
- For heavy electrical equipment panels such as switchgear and breaker panels: Any fire in one cubicle that caused damage and/or ignition in a second cubicle or to overhead cables is potentially challenging. If the damage was confined to a single cubicle and has essentially no potential to spread beyond that cubicle, the fire can be classified as non-severe. However, care should be taken when fortuitous configuration factors contributed to the lack of fire spread or damage (e.g., the cubicle happened to be at the top of a stack of cubicles).
- For relay/control panels: For solid-state devices, any fire that caused the fire spread/damage beyond the initiating circuit card is potentially challenging. For electromechanical devices (e.g., control relays), consider fire damage or spread extending beyond the initiating component. For example, if an event report identifies a resistor on a circuit board as the ignition source and the fire self-extinguished without causing damage beyond that one circuit card, the ignition source should be considered the circuit card, and in this case the event would be classified as nonsevere. A self-extinguished fire involving only a single electro-mechanical relay would also be classified as nonsevere (the "smoked relay" case).
- For diesel generators: A manifold fire (very common) is potentially challenging if it spread to a secondary fuel or if the initial fuel source is continuous (i.e., an ongoing fuel or oil leak, rather than a glob of grease). In contrast, a fire that causes substantial damage to the diesel generator but does not damage or spread to any other components should be classified as potentially challenging.
- Hot-work fires: An event is classified as potentially challenging if some active intervention appeared necessary to suppress the fire (i.e., if the fire watch put it out quickly, but clearly a fire was started and had the potential to grow, this is a potentially challenging fire event). The use of a single fire extinguisher should not be the only indicator of a potentially challenging fire.

A final point is related to certain types of general electrical equipment fires. Care was taken in the classification of certain self-extinguished electrical fires. In particular, electrical fires may self-extinguish after plant personnel deenergize the impacted equipment. Deenergizing the electrical equipment is one mechanism of active intervention by plant personnel; hence, such events were generally classified as potentially challenging.

C.2.3.2 Subjective Classification Criteria

A fire was classified as potentially challenging if there are sufficient indications to determine that the fire was self-sustaining or that it might have affected components or led to ignition materials outside the fire ignition source. This judgment may be based on the general tone of the event report or on the observation of specific aspects of a fire event. In general, observations of the following features in an event report can be indicative of a potentially challenging fire.

- It is apparent that active intervention was needed to prevent potential spread.
- There are indications that heat was generated of sufficient intensity and duration to affect components outside the fire ignition source, had such been in close proximity to the ignition source.
- There are indications that flames or heat were generated of sufficient intensity and duration to cause the ignition of secondary combustibles outside the fire ignition source, had such been in close proximity to the ignition source.
- Substantial smoke was generated (e.g., a room was reported to be smoke-filled when first responders arrived on the scene, or the report includes a description such as “heavy” or “dense” smoke).

C.2.4 Implications of the Event Screening Process and Criteria

The practices and criteria used to identify potentially challenging fires have direct implications for the fire modeling and detection and suppression analysis tasks, as well as for the potential application of fire severity factors. These implications include the following:

- The criteria for potentially challenging fires has already eliminated those fire events that were self-extinguished with no potential to spread to or cause damage to objects outside the boundaries of the fire ignition source. Hence, no additional credit should be taken for self-extinguishing fires. The only exception is electrical fires that self-extinguish once actions are taken by plant personnel to deenergize the affected equipment.
- Potentially challenging fires include those where prompt suppression was effective at minimizing fire growth and damage. Hence, it is appropriate to independently credit means of prompt suppression, including, in particular, fire watches.
- The criteria for potentially challenging fires are somewhat dependent on the type of fire ignition source involved in the events. Hence, the nominal or minimal fire source intensity implied is also dependent on the fire ignition source. However, as a general rule, potentially challenging fires do reflect those that actually did or very well could have spread to secondary fuels and/or caused damage to targets outside the ignition source. Hence, the fire modeling assumptions should reflect this potential.
- The base or nominal fire frequencies reflect the occurrence frequency of fires that will need some active intervention by plant personnel to suppress. Hence, it should be assumed that the fires will indeed continue to burn, will grow to the extent that secondary combustible materials are available to support combustion, and will carry the potential to damage components outside the fire ignition source until and unless active intervention in the fire is affected.

- The method for calculating the base fire frequencies leaves the potential for the prudent application of an additional fire severity factor. That is, the method does not explicitly consider the potential that a given fire ignition source or fire ignition event will lead to a fire of any particular intensity or duration. Indeed, for various reasons, most of the fires classified as potentially challenging did not evolve into truly challenging fires. This can be reflected through the appropriate analysis of fire growth and damage potential, the appropriate analysis of detection and suppression, and/or potentially the appropriate application of a fire severity factor.

C.3 Additional Considerations

The calculation of location/ignition source frequencies calls for the fire events to be classified as follows:

- Location/ignition source,
- NPP unit name,
- Mode of operation (power and low power), and
- Potentially challenging, not challenging, or undetermined.

The information provided in event reports may have deficiencies in NPP unit name, mode of operation, or severity of the fire (i.e., whether or not the fire is potentially challenging). Since excluding these events would potentially lead to nonconservatism in fire frequency estimation, an approach was developed to include them in the frequency estimation process.

Consider first the following definitions.

N = total number of NPP units in the analysis

K = number of fire events with known information associated with a location/ignition source bin of a known NPP unit

$F_{plant,i}$ = total number of fire events in the NPP unit involving location or ignition source bin i

i = location or ignition source bin

p = Probability that the NPP unit was in power operation mode

q = Probability that an undetermined fire event is potentially challenging

A = Number of events with no NPP unit name (all other parameters are known)

B = Number of events with unknown mode of operation (all other parameters are known)

C = Number of events with undetermined "challenging" level (all other parameters are known)

AB = Number of events with no known NPP unit name and unknown mode of operation (challenging level known)

AC = Number of events with no known NPP unit name and undetermined challenging level (mode of operation unknown)

BC = Number of events with unknown mode of operation and undetermined challenging level (NPP unit name known)

ABC = Number of events with no known NPP unit name, unknown mode of operation, and undetermined challenging level

To estimate p, the fraction of the events with known power operation mode that had occurred during normal power operation was used. Also, for q it was assumed that q = 0.5.

In general, once the events are classified per location/ignition source bin, they are further classified per NPP unit t, operating mode, and "challenging fire" categorization. Therefore, each fire event in the FEDB can be classified according to the combination of possibilities shown in Table C-2. Those fire events determined as non-challenging are not included in the statistical analysis. The multiplier shown in Table C-2 is used to adjust the number of fires. Fires with no associated known NPP unit name are distributed among all other plants. It should be noted that in the case of Main Control Board fires, there were three events that could not be ascertained whether or not the Main Control Board was affected directly from the fire. Those events were distributed equally between the Main Control Board and Plant Wide Components – Electrical Cabinets.

Table C-2
Fire Event Classifications and Frequency Estimation Action

Class. #	Information Deficiencies			Frequency Estimation Action	
	Known Plant	Known Op. Mode	Challenging Fire	Multiplier	Method of inclusion
1	Yes	Yes	Yes	1	As is
2	Yes	Yes	Undetermined	q	As is
3	Yes	No	Yes	p	As is
4	Yes	No	Undetermined	qp	As is
5	No	Yes	Yes	1	Distribute among units
6	No	Yes	Undetermined	q	Distribute among units
7	No	No	Yes	p	Distribute among units
8	No	No	Undetermined	qp	Distribute among units

Based on the eight possibilities shown in Table C-2, the following equation is used to calculate the number of fire events assigned to each plant:

$$F_{plant,i} = K_i + C_i \cdot q + B_i \cdot p + BC_i \cdot p \cdot q + A_i/N + (AC_i/N) \cdot q + (AB_i/N) \cdot p + (ABC_i/N) \cdot p \cdot q$$

A detailed description of each parameter in the equation follows.

As suggested by the above equation, the number of fires in a given location/ignition source bin with known information (i.e., Classification 1 in Table C-2) are counted and assigned to a respective plant (K_i). The events with unknown information are added to this term.

A_i/N: For those events where the plant name in not known but the mode of operation and "challenging" level is known (i.e., Classification 5 in Table C-2), the average number of events per plant is added to K_i.

$B_i \cdot p$: The number of fires associated with a specific plant for which the challenge level is known, but the mode of operation is the only unknown is multiplied by the fraction *p* to adjust it for events that may have occurred during power operation. This applies to Classification 3 events, as defined in Table C-2.

$C_i \cdot q$: The number of fires associated with a specific plant for which the mode of operation is known but the challenge level is the only unknown is multiplied by the fraction *q* to adjust it for events that may have been challenging. This applies to Classification 2 events, as defined in Table C-2.

(AB_i/N)·p: The number of fires for which the challenge level is known and the other two parameters (i.e., plant name and mode of operation) are unknown is first averaged over the entire population of plants and then multiplied by the fraction *p* to adjust it for events that may have occurred during power operation. This applies to Classification 7 events, as defined in Table C-2.

(AC_i/N) q: The number of fires for which the mode of operation is known and the other two parameters (i.e., plant name and challenge level) are unknown is first averaged over the entire population of plants and then multiplied by the fraction *q* to adjust it for events that may have been potentially challenging. This applies to Classification 6 events, as defined in Table C-2.

$BC_i \cdot p \cdot q$: The number of fires for which the plant name is known and the other two parameters (i.e., mode of operation and challenge level) are unknown is multiplied by the fractions *p* and *q* to adjust it for events that may have occurred during power operation and may have been challenging. This applies to Classification 4 events, as defined in Table C-2.

(ABC_i/N)·p·q: The number of events with no plant name, unknown mode of operation, and undetermined challenge level is first averaged over the entire population of plants and then multiplied by the fractions *p* and *q* to adjust it for events that may have occurred during power operation and may have been challenging. This applies to Classification 8 events, as defined in Table C-2.

Table C-3
Generic Fire Ignition Frequency Model for U.S. Nuclear Power Plants

	Location	Ignition Source	# of Events	Rx	RDAT Output				
					5%	50%	95%	Mean	St. Dev
1	Battery Room	Batteries	1.0	2486	2.0E-05	3.2E-04	2.4E-03	7.5E-04	2.2E-03
2	Containment (PWR)	Reactor Coolant Pump	6.5	1089	3.1E-04	3.6E-03	1.7E-02	6.1E-03	1.3E-02
3	Containment (PWR)	Transients and hotwork	2.4	1089	1.3E-04	1.1E-03	5.9E-03	2.0E-03	3.6E-03
4	Control Room	Main control board	5.0	2486	9.0E-05	1.2E-03	6.3E-03	2.1E-03	4.8E-03
5	Control/Auxiliary/Reactor Building	Cable fires caused by welding and cutting	2.0	1674	3.1E-05	6.4E-04	5.0E-03	1.6E-03	5.2E-03
6	Control/Auxiliary/Reactor Building	Transient fires caused by welding and cutting	12.6	1674	8.9E-05	2.4E-03	3.3E-02	9.7E-03	4.1E-02
7	Control/Auxiliary/Reactor Building	Transients	6.0	1674	1.6E-04	2.2E-03	1.1E-02	3.9E-03	9.2E-03
8	Diesel Generator Room	Diesel generators	49.5	2486	1.9E-03	1.2E-02	6.6E-02	2.1E-02	3.2E-02
9	Plant-Wide Components	Air compressors	5.0	2486	3.8E-05	9.0E-04	7.9E-03	2.4E-03	8.3E-03
10	Plant-Wide Components	Battery chargers	4.0	2486	7.6E-05	9.8E-04	5.4E-03	1.8E-03	4.2E-03
11	Plant-Wide Components	Cable fires caused by welding and cutting	3.0	1674	2.4E-05	6.8E-04	6.7E-03	2.0E-03	7.4E-03
12	Plant-Wide Components	Cable run	11.0	2486	2.1E-04	2.4E-03	1.3E-02	4.1E-03	8.0E-03
13	Plant-Wide Components	Dryers	5.5	2486	5.2E-05	1.1E-03	8.1E-03	2.6E-03	8.1E-03

Table C-3
Generic Fire Ignition Frequency Model for U.S. Nuclear Power Plants (Continued)

	Location	Ignition Source	# of Events	Rx	RDAT Output				
					5%	50%	95%	Mean	St. Dev
14	Plant-Wide Components	Electric motors	10.0	2486	2.4E-04	2.7E-03	1.3E-02	4.6E-03	9.5E-03
15	Plant-Wide Components	Electrical cabinets	111.5	2486	6.6E-03	3.1E-02	1.3E-01	4.5E-02	5.2E-02
16	Plant-Wide Components	High energy arcing faults	3.5	2486	5.3E-05	7.5E-04	4.5E-03	1.5E-03	3.5E-03
17	Plant-Wide Components	Hydrogen tanks	4.0	2486	8.2E-05	9.4E-04	5.0E-03	1.7E-03	3.5E-03
18	Plant-Wide Components	Junction box	3.0	2486	1.5E-05	5.0E-04	6.1E-03	1.9E-03	8.4E-03
19	Plant-Wide Components	Miscellaneous hydrogen fires	5.5	2486	4.1E-05	9.6E-04	8.2E-03	2.5E-03	8.4E-03
20	Plant-Wide Components	Off-gas/H2 recombiner (BWR)	25.5	585	2.7E-03	2.5E-02	1.3E-01	4.4E-02	9.3E-02
21	Plant-Wide Components	Pumps	52.0	2486	2.8E-03	1.5E-02	5.9E-02	2.1E-02	2.5E-02
22	Plant-Wide Components	RPS MG sets	3.7	1674	9.6E-05	9.8E-04	4.7E-03	1.6E-03	3.3E-03
23	Plant-Wide Components	Transformers	23.0	2486	6.8E-04	5.9E-03	3.0E-02	9.9E-03	1.8E-02
24	Plant-Wide Components	Transient fires caused by welding and cutting	7.3	1674	6.9E-05	1.7E-03	1.7E-02	4.9E-03	1.7E-02
25	Plant-Wide Components	Transients	12.9	1674	1.4E-04	3.0E-03	3.4E-02	9.9E-03	3.6E-02

Table C-3
Generic Fire Ignition Frequency Model for U.S. Nuclear Power Plants (Continued)

	Location	Ignition Source	# of Events	Rx	RDAT Output				
					5%	50%	95%	Mean	St. Dev
26	Plant-Wide Components	Ventilation subsystems	16.0	2486	2.7E-04	3.7E-03	2.3E-02	7.4E-03	1.8E-02
27	Transformer Yard	Transformer - catastrophic	10.0	1674	3.3E-04	3.6E-03	1.7E-02	6.0E-03	1.2E-02
28	Transformer Yard	Transformer - noncatastrophic	21.5	1674	1.3E-03	8.7E-03	3.4E-02	1.2E-02	1.7E-02
29	Transformer Yard	Yard transformers (others)	3.0	1674	4.2E-05	9.1E-04	6.7E-03	2.2E-03	6.8E-03
30	Turbine Building	Boiler	2.0	2486	6.5E-05	6.4E-04	3.2E-03	1.1E-03	2.1E-03
31	Turbine Building	Cable fires caused by welding and cutting	1.5	1674	1.9E-05	5.1E-04	4.9E-03	1.6E-03	6.1E-03
32	Turbine Building	Main feedwater pumps	15.5	1674	1.2E-04	3.2E-03	4.4E-02	1.3E-02	5.5E-02
33	Turbine Building	T/G excitor	6.5	1674	2.4E-04	2.5E-03	1.1E-02	3.9E-03	7.6E-03
34	Turbine Building	T/G hydrogen	10.5	1674	4.3E-04	4.2E-03	1.8E-02	6.5E-03	1.2E-02
35	Turbine Building	T/G oil	15.5	1674	6.8E-04	6.0E-03	2.8E-02	9.5E-03	1.6E-02
36	Turbine Building	Transient fires caused by welding and cutting	13.0	1674	4.0E-04	4.7E-03	2.5E-02	8.2E-03	1.7E-02
37	Turbine Building	Transients	10.2	1674	1.0E-04	2.3E-03	2.5E-02	7.4E-03	2.6E-02

C.3.1 Fire Events in Decommissioned Plants

EPRI has not made a systematic effort to collect fires in decommissioned plants. However, data collection has resulted in 11 fires that occurred after the plant's decommission date (one of these fires occurred in a trailer). Five of these records indicate transient fires, four of which were caused by welding and cutting activities. The remaining five fires were classified as follows: two pump fires, one electrical cabinet fire, one dryer, and one fire in a junction box splice.

These records were included in the fire ignition frequency model as fires during low-power operation. They were not excluded because they occurred shortly after the decommission date or in a location (e.g., radwaste building) where plant configuration is likely to remain the same or similar. If the information indicates that plant configuration is significantly altered compared to its configuration prior to decommissioning, the event was excluded from the ignition frequency model.

C.3.2 Estimated Reactor Years of Power and Low-Power Operation

The number of reactor years for power operation is calculated by adding the years of operation for each plant during the period of analysis multiplied by the capacity factor. The capacity factor is the percentage of a year in which the reactor was in power operation. A capacity factor of 0.62 was assumed up to the end of calendar year 1993. From 1994 to 2000, the capacity factors for each plant listed in NUREG-1350 were used.

C.4 References

C.1 *Fire Event Database and Generic Ignition Frequency Model for U.S. Nuclear Power Plants*, EPRI, Palo Alto, CA: 2001. 1003111.

C.2 Kaplan, "On a 'Two-Stage' Bayesian Procedure for Determining Failure Rates from Experiential Data," IEEE Transactions on Power Apparatus and Systems, Volume PAS-102, 1983, pp. 195-202.

C.3 "R-DAT and R-DAT Plus 1.5 User's Manual", Prediction Technologies, College Park, MD, 2002.

Appendix D

Appendix for Chapter 7, Technical Bases

D
APPENDIX FOR CHAPTER 7, TECHNICAL BASES

This procedure is used to perform quantitative screening of fire compartments and scenarios. The screening criteria applied in this procedure are intended to provide a practical method for quantitatively screening fire compartments and scenarios without sacrificing model accuracy and fidelity. It is inherently assumed that the Fire PRA Model will be used in future applications. The information below provides the technical bases for the quantitative screening criteria applied in this procedure.

1. The CDF screening criteria is based on the assumption that the total CDF for most nuclear power plants in the United States is on the order of 1.0E-05/yr or higher. Based on Figure 3 of Reference [D.1], a CDF change of less than 1.0E-06/yr is regarded as very small (Region III). Therefore, it is assumed that if the sum of the CDF frequencies for all screened fire compartments is less than 10% of the Internal Events average CDF, the change would be regarded as very small. For individual fire compartments, it is assumed that if the CDF frequency for a fire compartment is less than the product of the highest fire ignition frequency and the conditional risk (CCDP) of the case where the General Plant Transient Internal Event Initiating Event is set to 1.0 and all other Internal Events Initiating Events are set to 0.0, then the change would be regarded as very small. However, the total CDF frequency for all screened fire compartments should still be less than 10% of the Internal Events average CDF.

2. The LERF screening criteria is based on the assumption that the total LERF for most nuclear power plants in the United States is of the order of 1.0E-06/yr or higher. Based on Figure 4 of Reference [D.1], a LERF change of less than 1.0E-07/yr is regarded as very small (Region III). Therefore, it is assumed that if the sum of the LERF frequencies for all screened fire compartments is less than 10% of the Internal Events average LERF, the change would be regarded as very small. For individual fire compartments, it is assumed that if the LERF frequency for a fire compartment is the product of the highest fire ignition frequency and the conditional risk (CLERP) of the case where the General Plant Transient Internal Event Initiating Event is set to 1.0 and all other Internal Events Initiating Events set to 0.0, the change would be regarded as very small. However, the total LERF frequency for all screened fire compartments should still be less than 10% of the Internal Events average LERF.

3. The ICDP screening criteria of 1.0E-06 is based on the temporary change risk criteria documented in Reference [D.2].

4. The ILERP screening criteria of 1.0E-07 is based on the temporary change risk criteria documented in Reference [D.2].

D.1 References

D.1 *An Approach for Using Probabilistic Risk Assessment In Risk-Informed Decisions on Plant-Specific Changes to the Licensing Basis*, U.S. NRC Regulatory Guide 1.174, Revision 1, November 2002.

D.2 *PSA Applications Guide*, EPRI, August 1995. EPRI-TR-105396.

Appendix E

Appendix for Chapters 8 and 11, Severity Factors

E
APPENDIX FOR CHAPTERS 8 AND 11, SEVERITY FACTORS

The severity factor is the probability that fire ignition would include certain specific conditions that influence its rate of growth, level of energy emanated, and duration (time to self extinguishment) to levels at which target damage is generated. For example, in the case of electrical cabinets, the peak heat release rate varies among the fire events. The probability of the heat release rate being of certain level that, if not suppressed, could lead to target damage, is the severity factor of that fire scenario.

E.1 Severity Factor Determination

For certain ignition sources, an uncertainty distribution exists for the heat release rate (HRR). Using the HRRs, the target damage time can be calculated. The severity factor can be defined as the probability that time to target damage is less than infinity. This is the same as the probability of all heat release rates that lead to target damage. In the fire risk quantification process, probability of nonsuppression is included for each target damage time. Since probability of nonsuppression increases as target damage time decreases, the severity factor cannot be determined as a single value. It should be combined with the probability of nonsuppression.

The process for calculating the combined probability is illustrated in Figure E-1 using a discretized probability distribution approach. The following steps may be followed to arrive at the combined probability. Note that P_i, defined below, can be regarded as the severity factor of the specific range of HRRs.

Step 1. Discretize the HRR distribution into a reasonable number of bins and corresponding probabilities (i.e., HRR_i and P_i). (Note that in Section E.2, below, a set of discretized distributions are provided.)

Step 2. Using the specific conditions of the fire scenario, calculate the time to target damage (t_i) for each heat release rate value of the discretized distribution.

Step 3. Create a discretized probability distribution for time to damage by assigning to each target damage time obtained in the preceding step the probability value of the corresponding heat release rate (i.e., t_i and P_i).

Step 4. For each target damage time (t_i), estimate the probability of nonsuppression (P_{NSi}) from the suppression curves (see Appendix P).

Step 5. Calculate the combined probability of nonsuppression and severity factor of the fire scenario using the following formula:

$$F_{sev}P_{NS} = \sum P_i P_{NSi}.$$

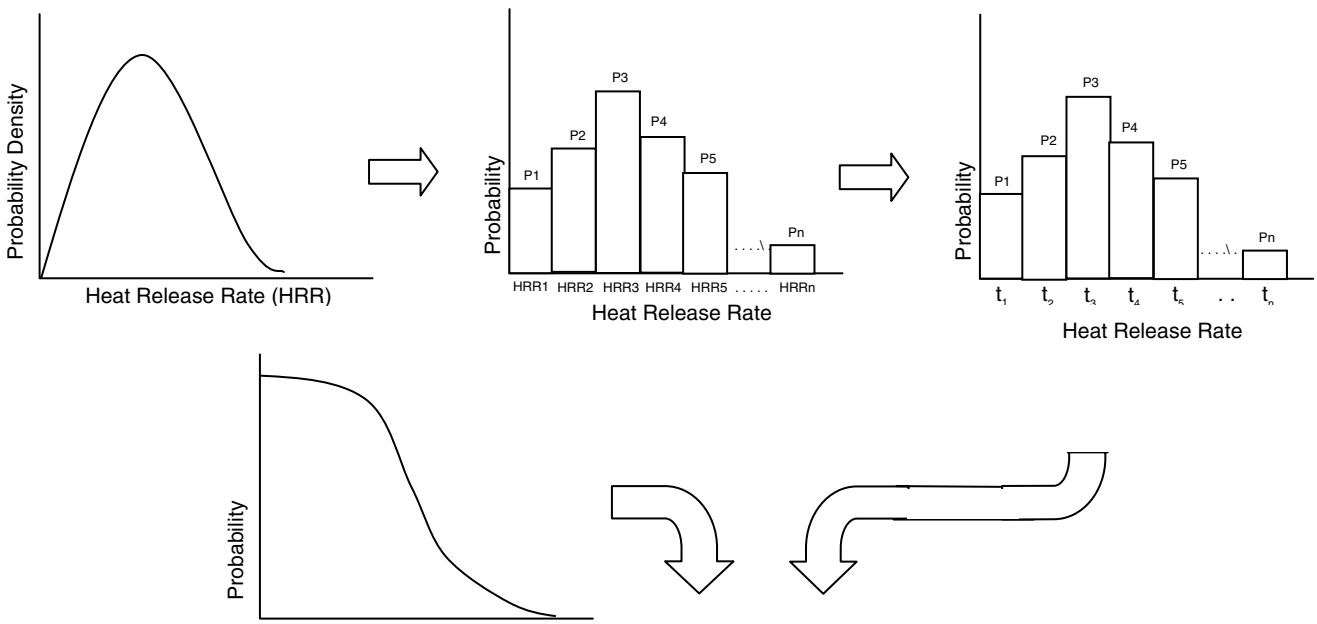

HRR Values	HRR1	HRR2	HRR3	HRR4	. . . .	HRRn
Individual Severity Factor	P_1	P_2	P_3	P_4	. . . .	P_n
Time to damage	t_1	t_2	t_3	t_4	. . . .	t_n
Prob. of supp. after damage	P_{NS1}	P_{NS2}	P_{NS3}	P_{NS4}	. . . .	P_{NSn}

Figure E-1
Severity Factor Estimation Process

E.2 Discretized Heat Release Rate Distributions

In this section, to facilitate the process of calculating combined probability of nonsuppression and severity factor, discretized versions of the heat release rate distributions provided in Appendix G are provided. Table E-1 provides a list of the heat release rate distributions. Tables E-2 through E-9 provide the discretized distributions.

Table E-1
List of Heat Release Rate Distributions

Case	Ignition Source	HRR (Btu/s)		Gamma Distribution		Reference
		75th	98th	α	β	
1	Vertical cabinets with qualified cable, fire limited to one cable bundle	65	200	0.83	56.6	Table G-1
2	Vertical cabinets with qualified cable, fire in more than one cable bundle	200	665	0.7	204	Table G-1
3	Vertical cabinets with unqualified cable, fire limited to one cable bundle	85	200	1.6	40	Table G-1
4	Vertical cabinets with unqualified cable, fire in more than one cable bundle closed doors	220	440	2.6	64	Table G-1
5	Vertical cabinets with unqualified cable, fire in more than one cable bundle open doors	220	950	0.45	366	Table G-1
6	Pumps (electrical fires)	65	200	0.83	56.6	Table G-1
7	Motors	30	65	2	11.1	Table G-1
8	Transient Combustibles	135	300	1.86	53.7	Section G-4

Table E-2
Discretized Distribution for Case 1 Heat Release Rate (Vertical Cabinets with Qualified Cable, Fire Limited to One Cable Bundle)

Bin	Heat Release Rate (Btu/s)			Severity Factor (P_i)
	Lower	Upper	Point Value	
1	0	25	10.5	0.446
2	25	50	36	0.219
3	50	75	61	0.129
4	75	100	87	0.078
5	100	125	112	0.048
6	125	150	137	0.030
7	150	175	162	0.019
8	175	200	187	0.012
9	200	225	212	0.007
10	225	250	237	0.005
11	250	275	262	0.003
12	275	300	287	0.002
13	300	325	312	0.001
14	325	350	337	0.001
15	350	Infinity	405	0.001

Table E-3
Discretized Distribution for Case 2 Heat Release Rate (Vertical Cabinets with Qualified Cable, Fire in more than One Cable Bundle)

Bin	Heat Release Rate (Btu/s)			Severity Factor (P_i)
	Lower	Upper	Point Value	
1	0	85	32.7	0.506
2	85	170	123	0.202
3	170	255	209	0.113
4	255	340	294	0.067
5	340	425	379	0.041
6	425	510	464	0.026
7	510	595	549	0.016
8	595	680	634	0.010
9	680	765	719	0.006
10	765	850	804	0.004
11	850	935	889	0.003
12	935	1020	974	0.002
13	1020	1105	1060	0.001
14	1105	1190	1145	0.001
15	1190	Infinity	1386	0.001

Table E-4
Discretized Distribution for Case 3 Heat Release Rate (Vertical Cabinets with Unqualified Cable, Fire Limited to One Cable Bundle)

Bin	Heat Release Rate (Btu/s)			Severity Factor (P_i)
	Lower	Upper	Point Value	
1	0	25	14.2	0.227
2	25	50	37	0.261
3	50	75	62	0.192
4	75	100	87	0.126
5	100	125	112	0.079
6	125	150	136	0.048
7	150	175	161	0.028
8	175	200	186	0.016
9	200	225	211	0.010
10	225	250	236	0.005
11	250	275	261	0.003
12	275	300	286	0.002
13	300	325	311	0.001
14	325	350	336	0.001
15	350	Infinity	392	0.001

Table E-5
Discretized Distribution for Case 4 Heat Release Rate (Vertical Cabinets with Unqualified Cable, Fire in more than One Cable Bundle Closed Doors)

Bin	Heat Release Rate (Btu/s)			Severity Factor (P_i)
	Lower	Upper	Point Value	
1	0	50	34.0	0.082
2	50	100	76	0.213
3	100	150	124	0.224
4	150	200	174	0.177
5	200	250	223	0.122
6	250	300	273	0.077
7	300	350	323	0.046
8	350	400	373	0.027
9	400	450	423	0.015
10	450	500	473	0.008
11	500	550	523	0.004
12	550	600	572	0.002
13	600	650	622	0.001
14	650	700	672	0.001
15	700	Infinity	773	0.001

Table E-6
Discretized Distribution for Case 5 Heat Release Rate (Vertical Cabinets with Unqualified Cable, Fire in more than One Cable Bundle Open Doors)

Bin	Heat Release Rate (Btu/s)			Severity Factor (P_i)
	Lower	Upper	Point Value	
1	0	130	39.5	0.638
2	130	260	187	0.155
3	260	390	319	0.081
4	390	520	450	0.047
5	520	650	580	0.029
6	650	780	710	0.018
7	780	910	840	0.011
8	910	1040	971	0.007
9	1040	1170	1101	0.005
10	1170	1300	1231	0.003
11	1300	1430	1361	0.002
12	1430	1560	1491	0.001
13	1560	1690	1621	0.001
14	1690	1820	1751	0.001
15	1820	Infinity	2157	0.001

Table E-7
Discretized Distribution for Case 6 Heat Release Rate (Pumps – Electrical Fires)

Bin	Heat Release Rate (Btu/s)			Severity Factor (P_i)
	Lower	Upper	Point Value	
1	0	25	10.5	0.446
2	25	50	36	0.219
3	50	75	61	0.129
4	75	100	87	0.078
5	100	125	112	0.048
6	125	150	137	0.030
7	150	175	162	0.019
8	175	200	187	0.012
9	200	225	212	0.007
10	225	250	237	0.005
11	250	275	262	0.003
12	275	300	287	0.002
13	300	325	312	0.001
14	325	350	337	0.001
15	350	Infinity	405	0.001

Table E-8
Discretized Distribution for Case 7 Heat Release Rate (Motors)

Bin	Heat Release Rate (Btu/s)			Severity Factor (P_i)
	Lower	Upper	Point Value	
1	0	7	4.4	0.132
2	7	14	11	0.227
3	14	21	17	0.205
4	21	28	24	0.153
5	28	35	31	0.105
6	35	42	38	0.069
7	42	49	45	0.043
8	49	56	52	0.027
9	56	63	59	0.016
10	63	70	66	0.010
11	70	77	73	0.006
12	77	84	80	0.003
13	84	91	87	0.002
14	91	98	94	0.001
15	98	Infinity	110	0.001

Table E-9
Discretized Distribution for Case 8 Heat Release Rate (Transients)

Bin	Heat Release Rate (Btu/s)			Severity Factor (P_i)
	Lower	Upper	Point Value	
1	0	35	21.2	0.169
2	35	70	52	0.249
3	70	105	87	0.205
4	105	140	121	0.143
5	140	175	156	0.093
6	175	210	191	0.058
7	210	245	226	0.035
8	245	280	261	0.020
9	280	315	296	0.012
10	315	350	331	0.007
11	350	385	366	0.004
12	385	420	401	0.002
13	420	455	436	0.001
14	455	490	471	0.001
15	490	Infinity	548	0.001

E.3 Probability Distribution for Heat Release Rates in Oil Spill Fire Scenarios

The following steps are recommended for assigning the severity factor to scenarios involving oil spill fires.

1. Determine the amount of oil that can be spilled in the room.

2. Assign a severity factor of 0.2 to a scenario consisting of 98% or more of the amount of oil spilled and ignited.

3. Assign a severity factor of 0.98 to a scenario consisting on 10% of the amount of oil spilled and ignited.

Appendix F

Appendix for Chapter 8, Walkdown Forms

F
APPENDIX FOR CHAPTER 8, WALKDOWN FORMS

Two walkdown forms have been designed; one for listing the fixed ignition sources in a compartment, and the other for providing zone of influence (ZOI) information for fixed ignition source screening. Both forms should be completed for each compartment under review.

The Fixed Ignition Source Form is intended for compiling a list of items that can initiate a fire in a compartment. Once the list is prepared, each ignition source is examined (usually during the walkdown) using the information summarized in the Fire ZOI Form for the respective compartment. The information provided in the Fire ZOI Form depends on the geometry of the compartment. Specific inputs are required in the electronic version of this form to calculate the required ZOI parameters.

The objectives of this appendix are to:

1. Provide a description of the forms used in the scoping fire modeling task, and

2. Provide instructions on how to use the forms before, during, and after the walkdown.

A detailed description of each form follows.

F.1 Fixed Ignition Source Form

Figure F-1 provides the Fixed Ignition Source Form. This form lists the fixed ignition sources in a compartment. For each unscreened compartment at this stage of the Fire PRA, a separate form should be completed. The fixed ignition sources listed on the form should be consistent with the number of sources counted in the compartment during Task 6, Fire Ignition Frequency.

Note that Task 6 requires only the total number of fixed ignition sources by type or category. In this form, the specific ignition sources are noted by type and tag number. Analysts may choose to collect this level of information during the counting process in Task 6, even though some of the compartments may be screened out before conducting Task 8.

F.1.1 Form Inputs

- Header: Enter the names and designating identification numbers for the plant, building, fire area, and compartment, including any other additional comments. Note that the same header is used in the Fire ZOI Form.

Plant _____

Fire Area _____

Compartment _____

Damage Criteria	
Temperature [C]	218
Heat flux [kW/m2]	5

Pre-Walkdown Inputs		**WALKDOWN INPUTS**						Input	
Equip ID	HRR PDF	Fire Condition	Dist to Target (fts)	Calculated HRR	Critical 98th HRR	Screen ?	SF	(Task 6) λ	Adjusted λ
Cabinet A	1	Flames	0.5	18	200	No	6.4E-01	1.0E-04	6.41E-05
Cabinet B	1	Plume	3	48	200	No	3.5E-01	1.0E-04	3.51E-05
Cabinet C	3	Ceiling jet	1.5	1558	200	Yes	0.0E+00	1.0E-04	0
Pump	6	Plume	2	27	200	No	5.3E-01	1.0E-04	5.28E-05
Motor	7	Flame radiation	2.5	86	65	Yes	0.0E+00	1.0E-04	0
								Adjusted compartment frequency, λ_C =	**1.5E-04**

Figure F-1
Walkdown and Severity Factor Calculation Form

- Equipment Identification: Enter the name and tag number of each fixed ignition source in the compartment. The number of ignition sources per type should match the number used in Task 6 for the same type of ignition source. The ignition sources should be identified using the same labeling system as other tasks of the Fire PRA.
- Heat release rate (HRR) probability density function_ (PDF): Specify the case number (first column of Table F-1) of the heat release rate probability distribution for each item in the Equipment Identification column. The probability distributions are listed in the following table. Appendices E and G provides technical details on the distributions.

Table F-1
Probability Distributions for Heat Release Rates

Case	Ignition Source	HRR (Btu/s)	
		75th	98th
1	Vertical cabinets with qualified cable, fire limited to one cable bundle	65	200
2	Vertical cabinets with qualified cable, fire in more than one cable bundle	200	665
3	Vertical cabinets with unqualified cable, fire limited to one cable bundle	85	200
4	Vertical cabinets with unqualified cable, fire in more than one cable bundle closed doors	220	440
5	Vertical cabinets with unqualified cable, fire in more than one cable bundle open doors	220	950
6	Pumps	65	200
7	Motors	30	65
8	Transient Combustibles	135	300

- Fire condition: This is a walkdown input. The analyst should determine the location of the target within the ZOI. That is, which specific fire condition is affecting the target: flames, plume, ceiling jet, smoke layer, or flame radiation.
- Distance to target: This is a walkdown input. Once the location within the ZOI has been determined, the distance from the ignition source to the target should be measured according to the following description, illustrated in Figure F-2:
  - Flames: vertical distance from the base of the fire to the target.
  - Plumes: vertical distance from the base of the fire to the target.
  - Ceiling Jet: Horizontal distance from the centerline of the fire plume to the target. Target is assumed to be just below the ceiling.
  - Smoke layer: No distance is needed for targets immersed in the smoke layer.
  - Flame radiation zone: Horizontal distance between the centerline of the flames and the target.

- Calculated HRR: This value is calculated solving hand calculations based on the location within the ZOI and the distance from the ignition source to the target. A discussion of the hand calculations is provided later in this Appendix. These models are documented in Five-Rev1 [8.1] and NRR-FDT's [8.2].
- Critical 98th percentile HRR: This is the 98th percentile heat release rate corresponding to the assigned probability distribution in the second column of the table.
- Screen: This column compares the two previous columns and determines if the ignition source can be screened. If the calculated HRR is lower than the 98th percentile HRR, the ignition source cannot be screened.
- Severity factor: The severity factor is the area under the distribution to the right of the calculated heat release rate. A value of 0 is assigned if the equipment is screened.
- Task 6 λ: This is the ignition frequency for the equipment calculated in Task 6. It is calculated by multiplying the generic frequency times the location and ignition source weighting factors.
- Adjusted λ: This is the adjusted frequency, which considers the severity factor. The sum of this column is the new adjusted frequency for the compartment.

F.2 Fire Zone of Influence Form

The fire ZOI is defined as the region where a given target *is expected to be damaged* by fire generated conditions. In general, the ZOI consists of five distinct fire-generated hazardous regions: flame, flame irradiation region, fire plume, ceiling jet, and the hot gas layer. The critical values (usually distances) that define the ZOI are calculated using fire models listed in Appendix D of EPRI's Fire Modeling (TR-1002981) [Reference 8.1] which summarizes the hand calculations automated in FIVE-Rev1. Specifically:

1. Source Type: The form considers two types of fires: electrical, which includes cabinet and electrical motor fires, and flammable liquid fires, which includes confined and unconfined spills. These two fire types are further classified per location and combustible loading. Location refers to fires in the center, along a wall in the corner or a room. Combustible loading refers to the amount of cable or oil associated with the ignition source.
2. Target in Flame: A target should be considered inside a flame if a portion of it is located directly above the base of the fire and its distance from the base of the fire is less than the flame height. The flame height is calculated using Heskestad's correlation.
3. Target in the Flame Irradiation Region: A fraction of the heat released by the fire is irradiated from the flame to its surroundings. The intensity of this heat flux decreases as the radial distance from the fire increases. The critical distance, defined as the distance from the center of the flame, where the target would receive greater than its critical heat flux, is calculated using the point source fire irradiation model.
4. Target in the Fire Plume: Two distances are used to determine whether or not a target would be damaged when exposed to plume temperature: the target elevation above the fire, and the plume radius. The critical distance at which a target will be immersed in gas temperatures with a magnitude at least equal to its damage temperature is calculated using the Heskestad correlation for plume temperature. For the purpose of this task, the radius was calculated at the critical height above the base of the fire.

5. Target in the Ceiling Jet: A horizontal radial distance from the centerline of the fire plume is used to determine if a target in the ceiling jet will contact gases with temperatures at least equal to its damage temperature. This critical distance is calculated using Alpert's ceiling jet temperature correlation.
6. Target in the Hot Gas Layer: The heat release rate necessary to generate a hot gas layer with a temperature similar to the damage criteria of a target is estimated using the McCaffrey, Quintiere and Harkleroad (MQH) correlation. This correlation requires the specification of the room geometry and natural ventilation. For totally enclosed rooms, it is recommended to assume 0.5" high leakage paths below the openings.

Figures F-2 and F-3 illustrate the concept of ZOI and the Fire ZOI Form, respectively.

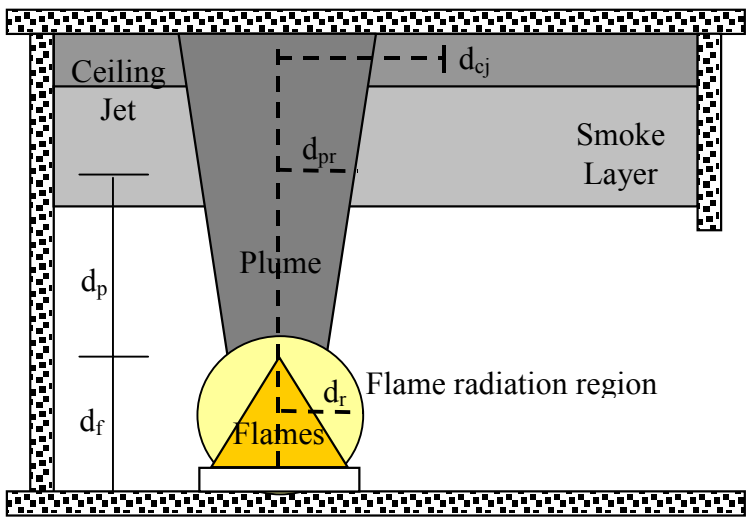

Figure F-2
Fire ZOI. d_p: Critical Distance for Targets in the Plume, d_{pr}: Radius of the Plume at the Critical Distance, d_f: Flame Height, d_{cj}: Critical Distance for Targets in the Ceiling Jet, d_r: Critical Distance for Targets Subjected to Flame Radiation

Plant _____

Fire Area _____

Compartment _____

Room Geometry

Opening area [m2]	2.0
Height of opening [m]	2.0
Room length [m]	8.0
Room width [m]	6.0
Room height [m]	5.0
Ambient temperature [C]	20.0

Wall Properties

Thermal conductivity [kW/mK]	0.00
Density [kg/m3]	2000
Specific heat [kJ/kg]	0.88
Wall thickness [m]	0.30

Dmage Criteria	UQ	Q
Temperature [C]	218	330
Heat flux [kW/m2]	5	11

Ignition Source

Fire duration [sec]	600
Fire diameter [m]	0.60
Fire location factor	1.00
Fire elevation [m]	0.00
Radiated fraction	0.40

ZONE OF INFLUENCE

PE/PVC Cable	Vertical cabinets with qualified cable, fire limited to one cable bundle	Vertical cabinets with qualified cable, fire in more than one cable bundle	Vertical cabinets with unqualified cable, fire limited to one cable bundle	Vertical cabinets with unqualified cable, fire in more than one cable bundle closed doors	Vertical cabinets with unqualified cable, fire in more than one cable bundle open doors	Pumps	Motors	Transient combustibles
98th Per HRR (BTU/s)	200	665	200	440	950	200	65	300
Flames (fts)	4.6	8.6	4.6	7.0	10.2	4.6	2.2	5.7
Plume (fts)	3.2	6.4	3.2	5.1	7.7	3.2	1.3	4.1
Ceiling Jet (fts)	0.3	0.9	0.3	0.6	1.3	0.3	0.1	0.4
Flame Radiation (fts)	3.8	6.9	3.8	5.6	8.3	3.8	2.2	4.7
Smoke Layer (BTU/s)	Screen	Screen	Screen	Screen	Screen	Screen	Screen	Screen

Qualified Cable								
98th Per HRR BTU/s	200	665	200	440	950	200	65	300
Flames (fts)	4.6	8.6	4.6	7.0	10.2	4.6	2.2	5.7
Plume (fts)	2.1	4.7	2.1	3.7	5.7	2.1	0.6	2.9
Ceiling Jet (fts)	0.1	0.5	0.1	0.3	0.7	0.1	0.0	0.2
Flame Radiation (fts)	2.6	4.7	2.6	3.8	5.6	2.6	1.5	3.1
Smoke Layer (BTU/s)	Screen	Screen	Screen	Screen	Screen	Screen	Screen	Screen

Figure F-3
Fire Zone of Influence Form. Predetermined Values are Based on Listed Input Parameters. Analysts Should Verify that Inputs are Applicable to the Compartment Under Study

F.2.1 Form Inputs

- The header is identical to the Fixed Ignition Source Form.
- The compartment data section includes inputs used to calculate the Fire ZOI.
- Damage/Ignition Criteria: Default values are used in these columns. The values affect the calculated ZOI. These values may be changed to evaluate fixed ignition sources with characteristics different to the ones in the list.
- Fire ZOI: These columns provide the result of the calculations using the equations described above.
  - A target is in the flames if: (1) a portion of it is directly above the base of the fire, and (2) its elevation is less than the flame height calculated on the form.
  - A target is in the flame radiation region if its distance from the center of the fire is less than the one calculated on the form.
  - A target is in the plume damage region if: (1) its elevation is above the flames, (2) its elevation is below the height calculated on the form, and (3) its horizontal distance from the centerline of the plume is less than the radius calculated on the form.
  - A target is in the ceiling jet damage region if: (1) it is located within 10% of the ceiling height near the ceiling, and (2) its horizontal distance from the centerline of the plume is less than the distance calculated on the form.
  - Hot gas layer temperatures damage a target if the heat release rate from the fire is larger than the heat release rate calculated in the hot gas layer column of the form.

The form presented in Figure F-3 has a calculated ZOI for the specific conditions listed as inputs.

Appendix G

Appendix for Chapters 8 and 11, Heat Release Rates

G
APPENDIX FOR CHAPTERS 8 AND 11, HEAT RELEASE RATES

This appendix includes:

- Background information on heat release rates,
- Recommended heat release rate values for typical fixed and transient ignition sources in nuclear power plants, and
- Technical basis for typical heat release rate values, including look-up tables of results for specific experiments.

G.1 Background

The heat release rate (HRR), measured in BTU/s or kW, is the rate at which the combustion reaction produces heat. The HRR is perhaps the most critical and difficult-to-predict parameter in determining consequences of a fire, because it is the driving parameter for estimating conditions in fire-induced flows such as plumes, ceiling jets, smoke layers, and radiation from flames.

In general, the heat release rate is calculated using flammability properties of the fuel. This approach is easily applied in the case of liquid and some plastic combustibles. These flammability parameters are the heat of combustion (ΔH_c, kJ/kg), and the specific burning rate ($\dot{m}''$, kg/sec-m^2). Using these two parameters, along with the burning area, the heat release rate by the fire is estimated as:

$$\dot{Q}_f = \Delta H_c \cdot \dot{m}'' \cdot A \qquad \textbf{Equation G-1}$$

Unfortunately, mathematical modeling of the physical and chemical transformations of materials as they burn is still the subject of research and, therefore, the heat output of a fire as a function of time cannot be calculated using Equation (G-1) for many combustibles under actual configurations and conditions. The most effective way to estimate the HRR profile of a combustible is probably by running fire tests, such as those designed to determine material flammability or large scale tests designed to predict HRR for preset configurations of combustible materials. However, both of these experiments are highly dependent on the geometry and the ventilation conditions of each test scenario and their proper application requires understanding the critical parameters affecting the phenomenology. The approach presented have is based on using such tests and evaluating their applicability to the type of fire sources present in a U.S. nuclear power plant, as represented by events in EPRI's FEDB. In general, the parameters influencing the HRR are identified and it is recommended that the analyst verify these values are appropriate for the scenarios being analyzed.

In practical applications, the HRR vs. time curve, depicted in Figure G-1, is divided in stages of the fire. Mowrer [G.1] describes four stages: incipient, growth, fully developed, and decay. In the incipient stage, the fire burns at a low intensity (i.e., smoldering cigarette or a small trash can fire). The duration of this stage may vary from seconds to hours. With appropriate conditions, an incipient fire may grow in intensity to its peak heat release rate. Depending on the combustible and its layout, the growth to a fully developed stage will vary from seconds to minutes. A fully developed fire will burn depending on the amount of fuel and the amount of oxygen surrounding the combustion process. As the fuel is consumed, the heat release rate profile will be in its decay stage. The intensity of the fire will also decrease if there is not enough oxygen to support the reaction.

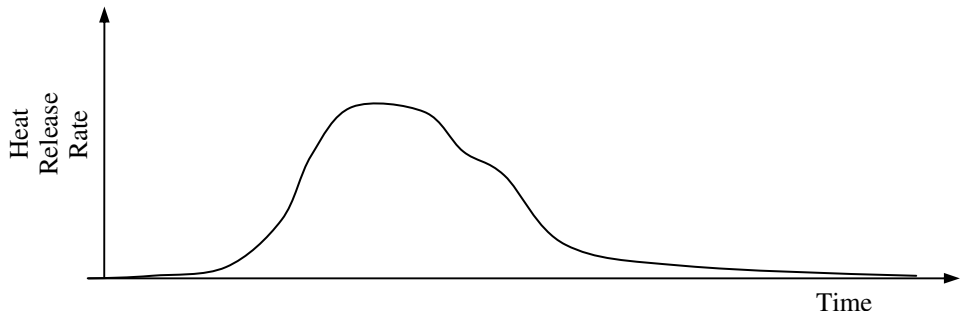

Figure G-1
Heat Release Rate Profile

These four stages are not observed in all fires and do not need to be included in every analysis, as long as the modeled fire conditions capture the fire hazards posed by the ignition source to the target. The following list provides a few general notes on developing heat release rate profiles.

1. The incipient stage is not usually included due to its uncertainty in duration and that it is not expected to generate thermal conditions that threaten the integrity of other targets in the room.

2. A fire may run out of fuel before reaching its peak heat release rate (steady burning stage). If the amount of combustible is known, the analyst may choose to model the growth stage until all the fuel is consumed.

3. Oxygen availability can affect the fire after it starts to grow. A fire may decay due to low oxygen concentrations. In contrast, an additional supply of oxygen to an already low oxygen concentration room may cause the fire to increase in intensity.

4. Heat release rate profiles can be affected by combustible layouts in the room. Therefore, it is not always easy to develop or find a profile for a specific situation. If a constant HRR profile is selected, the **constant value should be the peak fire intensity**.

5. Temperature and heat flux results associated with the decay stage of the fire will, in general, suggest less hazardous conditions than the growth of the fully developed stage. Once the fire starts to decay, temperatures in the room will decrease to ambient conditions. As a result, and depending on the objectives of the simulation, modeling the decay stage of the fire usually does not provide critical information in support of risk decisions.

G.2 About Recommended Heat Release Rate Values

G.2.1 Overview

The recommended HRR values for typical ignitions sources in nuclear power plants are listed in the following sections. The values are expressed as probability distributions in support of the severity factors approach. Technical basis for the selected fire intensities is also provided.

A gamma probability distribution was selected for modeling the uncertainty in the heat release rate. The gamma distribution was selected for two reasons: (1) it distributes probabilities among positive real numbers only (which is a limitation of the normal distribution for this application), and (2) uncertainty in the recommended heat release rate values is, for the most part, distributed in the same order of magnitude (which limits the application of a lognormal distribution).

G.2.2 Basis

The recommended heat release rate distribution profiles were developed based on expert judgment during a nonfacilitated meeting. The expert panel included those members of both the EPRI and NRC Fire Risk Requantification Study analysis teams with expertise in fire behavior/phenomena[1]. Information considered included existing fire PRA practice, qualitative insights from the nuclear power plant (NPP) FEDB, practical experience involving similar fire sources in nonnuclear industrial applications, and experimental data.

During this meeting, the overall fire analysis approach was also finalized. The proposed approach involves an integrated and interdependent set of four analysis tasks; namely, fire frequency analysis, fire severity/likelihood characterization, fire growth/damage analysis, and fire detection/suppression analysis. One specific objective of the proposed approach was to ensure full treatment of the dependencies between these analysis tasks.

Substantial consideration was given to existing Fire PRA practice, particularly as documented in the EPRI FIVE methodology and the Fire PRA Implementation (FPRAIG). Also considered were methodological insights derived by the NRC based on the IPEEE process. FIVE and the FPRAIG both recommend a single, fixed fire intensity level for any given fire ignition source. The values recommended were cited as the anticipated fire intensities.

One specific limitation of the IPEEE studies cited in the U.S. NRC insights work (NUREG-1742) was the failure to consider the risk contribution of low-likelihood, high-intensity fires. Fire behavior is inherently chaotic, and in practice, no two fires will be exactly the same. It is possible that the risk contribution of a fire scenario may be dominated by a low-likelihood event where the fire is more intense than anticipated. The proposed method addresses this issue through use of the intensity distribution.

---

[1] Panel members were: Bijan Najafi (SAIC), Francisco Joglar (SAIC), Steve Nowlen (SNL), Mardy Kazarians (Kazarians and Associates), and Matt Turgeon (SNL).

The first decision made was to assign a probability ranking to the fire intensity values recommended in FIVE and in the FPRAIG. That is, a decision had to be made as to where on the fire intensity distribution those particular values fell. Ultimately, the FIVE/FPRAIG values were taken as representative of the 75th percentile fire intensity. That is, 75% of the fires involving a given source would reach no greater than the cited fire intensity value (absent of any fire spread to secondary combustibles).

The second decision made was to establish an anticipated "high-confidence" fire intensity value expected to bound the vast majority of fires involving a given fire source. These values were ultimately assigned as the 98th percentile value for each source. The final distributions were established using a two-parameter distribution profile whose parameters could be derived given the 75th and 98th percentile values.

Note that as an initial cut, distributions were developed with the FIVE/FPRAIG fire intensity values assigned as the 50th percentile and the estimated high-confidence values as the 95th percentile. However, the panel unanimously agreed that this resulted in excessively conservative distributions. In particular, this led to fire likelihood/intensity values at the upper end of the distribution that were considered unreasonable. As a result, this led to the ultimate assignments, as described above. The result was judged reasonable by all participants in the panel, based in particular on consideration of the 1% fire intensity values implied by the resulting distribution.

Recommended HRR values for pool fires are not entirely based on experimental observations. Given that Equation (1) works perfectly for liquid fuels, and assuming known flammability properties, the HRR can be calculated if the size of the spill is also known. If the amount of liquid fuel is determined, the problem is reduced to determining the spill size. Areas of confined spills are easily determined. An empirical model is available for determining unconfined spill sizes. HRR for transient combustible fuel packages are also recommended. Recommendations are based on fire experiments.

Finally, separate appendices in Task 11 provide technical details on cable fires, hydrogen fires, high energy arcing faults, turbine generator fires, and main control board fires. These appendices provide, when appropriate, recommended heat release rate values and describe modeling alternatives in cases where traditional fire modeling tools are not suitable for the analysis.

G.3 Heat Release Rates for Fixed Ignition Sources

Table G-1 lists recommended probability distributions for fixed ignition sources. Fixed ignition sources include electrical cabinets, pumps, and motors.

Table G-1
Recommended HRR Values for Electrical Fires

Ignition Source	75th Percentile	98th Percentile	Gamma Distribution
Vertical cabinets with qualified cable, fire limited to one cable bundle	65 BTU/s[1]	200 BTU/s[2]	α=0.83, β=56.6
Vertical cabinets with qualified cable, fire in more than one cable bundle	200 BTU/s[2]	665 BTU/s[3]	α=0.7, β=204
Vertical cabinets with unqualified cable, fire limited to one cable bundle	85 BTU/s[4]	200 BTU/s[2]	α=1.6, β=40
Vertical cabinets with unqualified cable, fire in more than one cable bundle closed doors	220 BTU/s[5]	440 BTU/s[6]	α=2.6, β=64
Vertical cabinets with unqualified cable, fire in more than one cable bundle open doors	220 BTU/s[5]	950 BTU/s[7]	α =0.45, β=366
Pumps[8]	65 BTU/s	200 BTU/s	α=0.83, β=56.6
Motors[8]	30 BTU/s	65 BTU/s	α=2.0, β=11.1

1. Ref G.2: Sandia experiments, average of vertical cabinet fire intensities with qualified cable .
2. Ref G.3: (VTT) experiments with control cabinets.
3. Ref G.2: Sandia experiments, average of two bench-board cabinet experiments with qualified cable.
4. This value is based on expert judgment. The expert panel assumes that the type of cable will only affect the ability of the cables to ignite. Therefore, once ignited, a single cable bundle is assumed to burn with similar intensities regardless of the cable qualification. A value of 85 BTU/s was arbitrarily selected as a conservative estimate for unqualified cable to reflect a higher intensity at the 75th percentile when compared to qualified cables.
5. Ref 13.2: Sandia experiments, average of two vertical cabinet experiments with unqualified cable and closed doors.
6. Twice the intensity selected for the 75th percentile.
7. Ref 13.2: Sandia experiments, the highest heat release rate observed in cabinet with open doors and unqualified cable.
8. No experimental evidence is available for assessing fire intensities of electrical equipment fires. Recommended values are considered conservative, and are based on electrical cabinet experiments.

G.3.1 Growth of Electrical Cabinet Fires

Recommended values for electrical cabinets and other electrical equipment are based on the following two considerations:

1. Behavior of fires in electrical cabinets as observed in the experimental evidence available, and
2. Engineering judgment based on observations of the configuration on the combustibles (mainly cables) inside the cabinet.

Recommended values should be used with caution after determining if the cabinet in question meets the criteria for such values. A visual inspection of the cabinet internals should be very helpful for assessing the applicability of recommended fire intensities.

The recommended heat release rate profile for electrical cabinets is as follows

- The fire grows to its peak heat release rate in approximately 12 minutes.
- The fire burns at its peak heat release for approximately eight additional minutes.

This profile was obtained by averaging the growth times and steady burning durations of the Sandia cabinet experiments, listed in Table G-2.

Table G-2
Recommended HRR Values for Electrical Fires

Test	Units in Minutes		
	Time to Peak	Steady Burning	Time to Decay
ST1	7	8	15
ST2	6	11	17
ST3	10	8	18
ST4	14	3	17
ST5	8	9	17
ST6	8	17	25
ST7	18	7	25
ST8	10	20	30
ST9	10	10	20
ST10	10	20	30
ST11	18	2	20
PCT1	11	10	21
PCT2	12	2	14
PCT3	13	14	27
PCT4a	16	0	16
PCT4c	16	0	16
PCT5	17	0	17
PCT6	11	0	11
Test 21	4	14	18
Test 22	9	2	11
Test 23	10	0	10
Test 24	12	0	12
Average	**11.4**	**7.1**	**19**

A t^2 function can be use for representing the growing phase of the fire. The t^2 function is of the form

$$\dot{Q}(t) = Min\left(\dot{Q}_{peak}, \dot{Q}_{peak} \cdot \left(\frac{t}{\tau}\right)^2\right) \text{ (BTU/s)},$$

where τ is the time to reach the peak heat release rate, Q_{peak} is the peak heat release rate, and t is time.

G.3.2 Location of Electrical Cabinet Fires

The location of the fire is of particular importance because targets, such a cable trays, may be in close proximity to the cabinet. Visual observations of the cabinet internals may suggest where the fire is located. In some cabinets, however, this can be a challenging task if they contain numerous cable bundles in different orientations. Furthermore, any effort to determine the location of the fire should be consistent with the ability of analytical tools for using that information. That is, many fire models simply assume a point source of heat released at a given elevation. In addition, obstructions to plume flows like cabinet walls are not considered in the models. As a result, further details in describing the location of the fire may not increase the accuracy of a fire modeling prediction.

As a conservative practice, the fire should challenge the selected target set. That is, the source should be positioned in a location allowing fire-generated conditions to directly affect the target.

1. **Targets in the fire plume or ceiling jet:** Locating a source on top of a cabinet is usually conservative, since it assumes that cabinet walls will not affect fire-generated conditions. Furthermore, since the fire is located in the highest possible position, flames will be higher, and temperatures in the plume and ceiling jet will also be high.
2. **Targets affected by flame radiation:** The source should be located so that there is an unobstructed (assuming any passive fire protection system is not credited) view between the source and the target. A horizontal alignment between flame and target is the most conservative configuration. Analysts may need to assume cabinets with open or no doors in some scenarios.
3. **Targets engulfed in flames:** Flame height calculations should be performed to determine if the selected location will result in targets engulfed in flames. If the selected location cannot be altered (location not based on analysts judgment, but in a scenario configuration), a target engulfed in flames should be assumed damaged. Proper justification should be provided where the location of the fire is selected so that the target is out of the flames. For example, consider the case where the analyst locates the fire on top of an enclosed cabinet, resulting in a cable tray engulfed in flames. This is a conservative scenario, since the fire is expected to occur somewhere inside the cabinet. The analyst may choose to lower the fire position and ignore cabinet walls after a visual examination identifies the actual location of the combustibles.

4. **Targets immersed in the smoke layer:** The fire elevation will influence how far down the smoke layer will develop, although other important scenario characteristics will also be influential (See EPRI Fire Modeling). Notice that, with the exception of computational fluid dynamics (CFD) calculations, smoke layers are assumed to have uniform properties.

G.3.3 Fire Propagation in Electrical Cabinets

Openings and penetrations in cabinets are perhaps the most important factor in determining if a fire will propagate outside the cabinet. Typical cabinet openings and penetrations observed in the field are listed in Table G-3.

Table G-3
Typical Electrical Cabinet Openings and Penetrations

Vents	Louvers on the front, back and /or sides Grilles on the front, back, sides and/or top Open top Open top with shield Fans (typical on solid state equipment)
Penetrations	Air drop with flange and water seal Air drop with open conduit Air drop with rated fire seal (not common) Sealed conduit

Electrical cabinets that are not vented do not propagate a fire. Penetrations listed above are not considered vents. It is assumed that in the absence of other ventilation, penetrations will not allow sufficient air exchange to replace oxygen consumed by the fire, and an incipient fire will self-extinguish when there is no longer enough oxygen to support combustion.

If there are no vents in the cabinet and the only openings are penetrations of the kind listed above, combustion products from an incipient fire (carbon monoxide, carbon dioxide, soot) will accumulate inside the cabinet. The increasingly dense particulate matter will block radiative feedback, thus reducing external flux to the incipient fire (necessary to support combustion in qualified cable). In addition, as combustion products increase, the available oxygen will decrease. Buoyancy forces will cause warming air inside the cabinet to rise and try to exit through the top penetrations. Due to density differences, replacement air will compete with exiting air for access to the same opening. Therefore, air exchange through the top penetrations for typical nuclear power plant cabinet configurations listed above is not expected to be sufficient to support combustion.

One could postulate that hot gases accumulating at the top of the cabinet could ignite the penetrating cables, which could then afford a propagation path to overhead cable trays. SNL cabinet fire tests indicate that this does not occur in closed cabinets with qualified cable. NUREG/CR-4527: Part 1 reports the following results for tests with qualified cable and closed doors:

- Test ST7: cables at the top of the cabinet showed only slight deterioration and discoloration;
- Test ST8: heat damage to cables in the top of the cabinet was observed, but no ignition occurred.

Conditions in the SNL tests were less restrictive than the assumed configuration, in that the test cabinets had ventilation grills on top and bottom, and ignition was induced by a transient source rather than an electrical fault. Even so, only the cables near the ignition source burned in the two tests involving closed cabinets with qualified cable.

G.4 Heat Release Rates for Flammable Liquid Fires

Some of the fixed fire sources, such as pumps, diesel generators, main station transformers, and turbine generators, may contain combustible liquids as fuel or for lubrication. Heat release rate values for the liquid fires associated with these fixed sources are calculated based on the flammability properties of the combustible and the size of the spill using Equation (1). The assumption of a constant heat release rate is reasonable, since flammable liquid fires are characterized by a rapid growth to its peak intensity. The duration of the fire can be estimated by dividing the mass (lb) of the fuel by the mass loss rate (lb/sec). Flammability properties for selected combustibles are provided in Table G-4.

Table G-4
Flammability Properties for Selected Combustibles

Fuels	Heat of Combustion MJ/kg	Ideal Mass Loss Rate kg/s-m^2	Combustion Efficiency	Heat Release Rated kW/m^2	Reference
Liquid Fuels					
Acetone	28.6	0.041	0.97	1137	FIVE
Benzene	40.1	0.085	0.69	2352	FIVE
Ethanol	26.8	0.015	0.97	390	FIVE
Fuel oil, heavy	39.7	0.035	0.9	1251	FIVE
Gasoline	43.7	0.055	0.92	2211	FIVE
Heptane	44.6	0.101	0.92	4144	FIVE
Hexane	44.7	0.074	0.92	3043	FIVE
JP-4	43.5	0.051	0.95	2108	FIVE
Kerosene	43.2	0.039	0.9	1516	FIVE
Methanol	20	0.017	0.95	323	FIVE
Transformer oil	46.4	0.039	0.85	1538	FIVE
Xylenes	40.8	0.09	0.67	2460	FIVE

The spill area is determined by first assessing if the spill is confined or unconfined. Some authors of the Fire Protection Engineering literature refer to confined spills as pool fires. Equipment enclosures and/or floor openings can confine the liquid fuel spills. For confined spills, use the confined area in Equation (1) for calculating the heat release rate.

The area of unconfined spills can be determined using the model described by Gottuk and White [G.4]. According to the authors, the first step in estimating the fire size from unconfined spills is to determine if the spill is static or continuous. In a static spill, the flames will spread across the fuel surface. For a continuously flowing spill fire, the flame may spread initially across the spill area, but later will be controlled by the spread of the fuel over the surface until steady-state burning conditions are established. In general, the initial momentum of the fluid, the fluid surface tension, and the surface characteristics onto which fuel is spilled, affect the unconfined spill size. Furthermore, experimental observations have suggested that the spill size can increase after the original spill is ignited.

The area of static unconfined spills should include estimate of how much fuel contained in the equipment becomes exposed and involved in the fire. The exposed volume of the fuel should be estimated based on the amount of the fuel contained in the equipment and other factors that determine where and how the fuel may leak. The following model (Gottuk and White) may then be used to conservatively determine spill area. These values will yield the maximum spill area.

- For a fuel volume of 25 gal or less, assume a depth of 0.7 mm (0.027 in). This is equivalent to 57 ft^2/gal.
- For a fuel volume of more than 25 gal, assume a depth of 2.8 mm (0.1 in). This is equivalent to 14.5 ft^2/gal.

For a continuously flowing spill fire, after the original combustible area is consumed, the HRR can be estimated using the mass flow (lb/s or kg/s) times the heat of combustion of the fuel, assuming steady-state conditions.

Assuming known flammability properties, different spill sizes should be used to calculate HRR values. These values are used for uncertainty analysis. The uncertain parameter is the amount of spilled fuel. Consult equipment documentation and maintenance practices for determining how much fuel can be both in the equipment, and in a replacement container in a given location at the same time.

In addition to oil spills, pressurized oil fires can also occur in nuclear power plants.
Table G-5 provides heat release rate values for such fires.

Table G-5
Information for Pressurized Oil Fires

Metric Units

Diameter of the nozzle used in test: 0.38mm

Fluid	Nozzle Pressure (MPa)	Mass Flow Rate m_f (g/s)	Chemical HRR Q_{ch} (kW)	Net Heat of Combustion ΔH_T (kJ/g)	Ave. Heat of Combustion ΔH_{ch} (kJ/g)	Combustion Efficiency x_{ch}	Visible Flame Height L_f (m)
Mineral Oil	6.9	5.71	255	46.0	44.6	0.97	2.18
	5.2	5.18	230	46.0	44.3	0.96	1.96
	3.5	4.45	202	46.0	44.1	0.96	1.91
	1.7	3.0	131	46.0	41.4	0.90	1.50

English Units

Diameter of the nozzle used in the test: 0.015in

Fluid	Nozzle Pressure (PSI)	Mass Flow Rate m_f (lb/s)	Chemical HRR, Q_{ch} (BTU/min)	Net Heat of Combustion ΔH_T (BTU/lb)	Ave. Heat of Combustion ΔH_{ch}(BTU/lb)	Combustion Efficiency x_{ch}	Visible Flame Height L_f (ft)
Mineral Oil	1000.9	1.3E-02	14515	9.6E-02	9.3E-02	0.97	6.89
	754.3	1.1E-02	13092	9.6E-02	9.3E-02	0.96	6.43
	507.7	9.8E-03	11498	9.6E-02	9.2E-02	0.96	6.27
	246.6	6.6E-03	7457	9.6E-02	8.7E-02	0.90	4.92

References for Heat Release Rate Table A-4, Parts 1 and 2

1. Altman, G., Pfiffer, R.: Fire Protection Aspects of Transformers in Electrical Plants. Siemens Power Engineering VI (1984), pp. 194-198.
2. Khan, M.M., Characterization of Liquid Fuel Spray Fires: Factory Mutual Research Corporation Norwood, Massachusetts, HTD-Vol. 223, Heat and Mass Transfer in Fire and Combustion Systems, The Winter Annual Meeting of ASME, Anaheim, California, Nov. 8-13, 1992.
3. Alber, Friedrich, Altman, Gerhard, and Pfiffer, Richard, "Fire Behavior of Liquid-Immersed Distribution Transformers," *Siemens Power Engineering & Automation* , Vol. 8, no. 3, May-Jun. 1986, pg. 198-204.
4. Przybyla, Leon, Gandhi, Pravinray, "Flammable Liquids in Plastic Containers," *Fire Journal (Boston)*, Vol. 84, no. 3, May-Jun. 1990, pg. 38-39, 41-43.
5. Tewarson, A., Pion, R.F., "Flammability of Plastics. I. Burning Intensity," *Combustion and Flame*, Vol. 26, pg. 85-103.
6. Cote, Arthur E. (editor), Linville, Jim L. (Editor), *Fire Protection Handbook 16th Edition*, NFPA, Quincy, MA, 1986, pg. 5-120.

G.5 Technical Basis for Recommended HRR for Transient Ignition Sources

Characteristics of transient fires may be determined by:

- Review of the maintenance and other activities performed in the area, and
- Review of past transient fire experience at the plant.

Once the characteristic transient fire source is determined, use Table G-6 to find the tested fuel package the most closely represents (and bounds) the transient fire source. Table G-6 summarizes the results of a literature survey of fire tests for characterizing fires involving typical nuclear power plant transient combustibles fuel packages.

If no representative fuel package is found in this table, the HRR might be estimated using the characteristics of the combustible materials involved and heat of combustion from Table G-7.

The recommended HRR probability distribution for transient fires and transient fires caused by hot work activities has a 75th percentile of 135 BTU/s and a 98th percentile of 300 BTU/s.

G.6 Supplemental Information: Experimental Heat Release Rate Measurements

This section compiles the experimental information considered for developing the probability distributions of heat release rates.

G.7 Supplemental Information: Examples of Determining Heat Release Rates for Typical Electrical Cabinets in Nuclear Power Plants

Electrical cabinets in a typical U.S. nuclear power plant cover a range of functions and configuration represented by the following:

- Switchgears; typical voltages are 6KV, 4KV and 480V,
- MCCs or Load Centers (LCs), typically 480 V,
- Control panels and cabinets,
- Main control boards,
- Inverters,
- Battery chargers,
- Distribution panels, and
- Relay Racks.

Table G-6
Summary of Electrical Cabinet Experiments Reported in NUREG 4527

Test No.	Ignition Source Type	Cabinet Type	Cable Type	Load (MBTU)	Ventilation Method	Fire		Test	
						Peak HRR [kW]	Peak/Dur [min]	Objectives	Results
Qualified, Open									
ST1	Transient	Vertical	Q	0.11	No doors	24	7, 15	Single cable bundle. Evaluate if the transient ignition source could ignite the cable bundle and propagate a fire in it.	Cable bundle did not burn.
ST2	Transient	Vertical	Q	0.11	No doors	27	7, 17	Single cable bundle. Evaluate if the transient ignition source could ignite the cable bundle and propagate a fire in it.	The ignition source was not enough to ignite and propagate a fire through the cable bundle.
ST3	Transient	Vertical	Q	0.11	No doors	77	10, 18	Single cable bundle . Increased the source from ST1 and ST2 to ignite the cables and loosened up the bundle to allow additional air flow and flames through the cables.	The cable bundle ignited and fire propagated up the bundle. Entire bundle consumed
ST4	Transient	Vertical	Q	0.11	No doors	82	15, 17	Single cable bundle. Increased the source from ST1 and ST2 to ignite the cables. The bundle was even more loosened up compared to ST3.	The cable bundle ignited and burned quickly.
ST9	Transient	Vertical	Q	0.22	Doors open	132	11, 17	This test was conducted to investigate if internal horizontal barriers (e.g., strip chart recorders, mounting plates, etc.) would enhance the potential for the fire to propagate.	The fire did not propagate horizontally even with the partition. Peak HRR reached at about 10 min.
ST6	Transient	Vertical	Q	0.33	No doors. 2 - 19"*84" openings.	82	8, 25	Determine if fire in a corner cable bundle will propagate to another cable bundle in the cabinet.	No horizontal propagation of the fire in any cable bundles. It took about 8 minutes to reach the peak HRR.

Table G-6
Summary of Electrical Cabinet Experiments Reported in NUREG 4527 (Continued)

Test No.	Ignition Source Type	Cabinet Type	Cable Type	Load (MBTU)	Ventilation Method	Fire		Test	
						Peak HRR [kW]	Peak/Dur [min]	Objectives	Results
PCT3	Transient	Vertical	Q	1	Doors open	56	11, 25	Although ST6 thru ST9 had shown a fire in qualified cable and vertical cabinet would not spread, this test was conducted to determine what effect a larger fuel loading of qualified cable in a vertical cabinet would have on ignition and propagation of a fire.	No propagation. Obscuration at 10 minutes. Peak HRR reached at about 10 minutes.
PCT6	Transient	Benchboard	Q	1.47	Doors open front grill	215	15, 35	This test was done to investigate how the fires propagate in benchboard cabinets with unqualified cables.	Propagation 1.22m up. Obscuration at 11 minutes. Peak HRR reached after 15 minutes.
Test 23	Transient	Benchboard	Q	1.47	Front ventilation grill & open backdoor	1235	11, 15	Configuration similar to PCT 5, except qualified and room ventilation at one room change/hr (800 ft3/min).	Obscuration of the room at about 9 minutes (at optical density of 1.83-m). Peak HRR reached at 10:45 minutes.
Qualified, Closed									
ST7	Transient	Vertical	Q	0.33	Doors closed	95	16, 25	Same as ST6 except doors were put on the cabinet. The doors each had two vent grills, one on the top of the door and one near the bottom.	Only the main bundle above the fuel was consumed. No horizontal propagation to other bundles. Peak HRR reached in 17 minutes.
ST8	Transient	Vertical	Q	0.55	Doors closed	93	11, 30	Similar to ST7, but fuel loading and configuration more representative of NPP control room cabinets (based on actual pictures).	The main cable bundle directly above the source burned. The cable bundle and plastic wireway to the left of the main bundle also burned. No other bundle burned. Peak HRR reached in about 10 minutes. The room did not fill with smoke.
Unqualified, Open									
ST5	Transient	Vertical	UQ	0.11	No doors	132	10, 17	Single cable bundle. Similar to ST3 and ST4, but with unqualified cables to evaluate the ability to ignite and propagate a fire through a single bundle.	Entire bundle consumed with peak HRR of 100 BTU/s in less than 9 minutes.

Table G-6
Summary of Electrical Cabinet Experiments Reported in NUREG 4527 (Continued)

Test No.	Ignition Source Type	Cabinet Type	Cable Type	Load (MBTU)	Ventilation Method	Fire		Test	
						Peak HRR [kW]	Peak/Dur [min]	Objectives	Results
Unqualified, Open									
ST11	Transient	Vertical	UQ	0.58	Doors open	506	20, 20	Same as ST10, except the doors were left open to evaluate the effect of ventilation.	Propagated. All burned. The fire burned much quicker than ST10. The peak HRR of 480 BTU/s was reached at 19 minutes. It took longer than 5 minutes to reach 70 BTU/s. The smoke level quickly decended to the to the floor obscuring the cabinets in the enclosure.
Test25	Electrical	Vertical	UQ	1	Doors open	840		*In situ* fuel arrangement and amount the same as PCT2,except for electrical ignition source and room ventilation maintained at 8 rm ch/hr (6400 ft3/min).	Smoke first visible (very small amount) from elect source 6 minutes before ignition at 15.5 minutes. In-cab detector activated at 10.5 minutes after ignition.
PCT2	Transient	Vertical	UQ	1	Doors open	995	12, 15	After PCT1, increased the loading (from 690,000 to 1000,000 BTU) and left the door open. As a result of discussions with NRC, this was considered representative of cabinets in operating plants.	Propagated. Flames out cabinet door in 5 minutes. Visual obscuration in 6 minutes with total obscuration of the cabinets 9 minutes after ignition. About 11 minutes to reach the peak HRR (took ~7 minutes from 99.5 to 995 BTU/s).
PCT5	Electrical	Benchboard	UQ	1.44	Doors open front grill	791	12, 20	This test was done to investigate how the fires propagate in benchboard cabinets with unqualified cables.	Ignition occurs 15.33 minutes after electrical ignition is turned on. Smoke was visible for approximately 4 minutes before ignition and obscured the view in the room at 9 minutes after ignition. Peak HRR at 30 min, 15 minutes after fire ignition.
Test 24	Electrical	Benchboard	UQ	1.44	Front ventilation grill & open backdoor	1300	13, 15	Similar configuration as PCT5. Room ventilation at 1 rm ch/hr (800 ft3/min).	Complete obscuration at 6' level began in approximately 15 minutes and optical density of 1m-1 reached at 12 minutes after ignition. Smoke from electrical ignition was visible 1.5 minutes before ignition. Peak HRR reached at about 12.5 minutes after ignition.

Table G-6
Summary of Electrical Cabinet Experiments Reported in NUREG 4527 (Continued)

Test No.	Ignition Source Type	Cabinet Type	Cable Type	Load (MBTU)	Ventilation Method	Fire		Test	
						Peak HRR [kW]	Peak/Dur [min]	Objectives	Results
Unqualified, Closed									
ST10	Transient	Vertical	UQ	0.58	Doors closed. Vent grills on door	280	10, 30	Same as ST8 except for unqualified (UQ) instead of qualified (Q) cable. Same as ST11 except the doors were left open to evaluate the effect of ventilation.	Propagated. All burned. Obscuration faster than PCT1 (11.66 min). Reached the first peak HRR (255 BTU/s) at ~11 minutes and the second (265 BTU/s) at ~28 minutes. It took longer than 5 minutes to reach 70 BTU/s.
PCT1	Transient	Vertical	UQ	0.69	Doors closed. Vent grills on door	185	11, 40	Similar to ST10. Higher total fuel loading due to larger cabinet floor area. Loading per square meter of the cabinet floor area was the same.	Propagation. Peak HRR and obscuration at ~12 minutes. Fire did not burn as fast as ST10.
Heptane Pool, Propylene Burner, No Circuits.									
Test 21	Gas burner	Benchboard	Propylene	N/A	Front ventilation grill and open backdoor.	516	5, 20	To provide data with known heat source and rate to use in validating enclosure inst, previous test results and fire models.	Peak HRR of 489 BTU/s was reached within 4 minutes.
Test 22	Gas burner	Benchboard	Propylene	N/A	Front ventilation grill and open backdoor.	1000	10, 14	Same as test 21, except the burner was programmed to grow to 1000 kw in 8 minutes.	Peak HRR of 948 BTU/s was reached within 8 minutes.
PCT4	Heptane	Vertical	Heptane	N/A	Doors open	1900	15, 25	This test was done to evaluate the effect of a very large fire on room and adjacent cabinet temp. Since it was impractical (and unrealistic) to put twice as many cables as PCT2, 15 gallon of heptane with surface area of 10 ft^2 was used.	(a) Radiation from the cabinet walls to adjacent cabinet dominates, (b) single cabinet will burn differently than a cabinet with adjacent cabinets, (c) cabinets with a single wall (as opposed to double with air gap) result in damaging temperature in adjacent cabinet.

Table G-7
Transient Ignition Sources

Test	Fuel Package	Composition	Peak Heat Release Rate	Total Heat Content	Comment
SNL - Nowlen Test #5	12" × 16" × 12" cardboard box (.395 kg) 3" stack folded computer paper (6.8 kg) Crumpled paper (.680 kg)	Total 7.9 kg (17.4 lb) 5% cardboard 86% folded paper 9% crumpled paper	26 kW (25 BTU/s)	12,350 (BTU)	Very little of the folded paper burned.
SNL - Nowlen Test #6	12" × 16" × 12" cardboard box (.395 kg) 3" stack folded computer paper (6.8 kg) Crumpled paper (.680 kg)	Total 7.9 kg (17.4 lb) 5% cardboard 86% folded paper 9% crumpled paper	21 kW (20 BTU/s)	9,500 (BTU)	Very little of the folded paper burned.
LBL - Von Volkinburg, 3 airline trash bags	Three 11 gal. polyethylene trash bags (.035 kg, estimated) 36 polystyrene cups (.21 kg, estimated) 51 paper cups (.45 kg, estimated) Paper towels (2.73 kg)	Total 3.5 kg (7.7 lb) 3% polyethylene 6% polystyrene 13% paper cups 78% paper towels	351 kW (333 BTU/s)		One of four tests used as the basis for FIVE's recommended heat release rate for transient fires.
LBL - Von Volkinburg, 2 airline trash bags	Two 11 gal. polyethylene trash bags (07 kg, estimated) 24 polystyrene cups (.14 kg, estimated) 38 paper cups (.30 kg, estimated) Paper towels (1.82 kg)	Total 2.3 kg (5.2 lb) 3% polyethylene 6% polystyrene 13% paper cups 78% paper towels	297 kW (282 BTU/s)	70,678 (BTU)	One of four tests used as the basis for FIVE's recommended heat release rate for transient fires.

Table G-7
Transient Ignition Sources (Continued)

Test	Fuel Package	Composition	Peak Heat Release Rate	Total Heat Content	Comment
LBL - Von Volkinburg, 1 airline trash bag	11 gal. polyethylene trash bag (.035 kg, estimated) 12 polystyrene cups (07 kg, estimated) 17 paper cups (.15 kg, estimated) Paper towels (.91 kg)	Total 1.2 kg (2.6 lb) 3% polyethylene 6% polystyrene 13% paper cups 78% paper towels	159 kW (151 BTU/s)	45,941 (BTU)	One of four tests used as the basis for FIVE's recommended heat release rate for transient fires.
SNL - Nowlen Test #8	5 gal. polyethylene trash can (.771 kg) Polyethylene liner (.035 kg) Cotton rags (.46 kg) Paper (.34 kg)	Total of 1.6 kg (3.5 lb) ~50% polyethylene ~28% cotton rags ~21% paper	24 kW (23 BTU/s)	23,911 (BTU)	Fire developed quickly in the crumpled paper packing. This caused melting of the plastic wastebasket and eventual development of a fairly steady plastic pool fire.
SNL - Nowlen Test #7	5 gal. polyethylene trash can (.771 kg) Polyethylene liner (.035 kg) Cotton rags (.46 kg) Paper (.34 kg)	Total of 1.6 kg (3.5 lb) ~50% polyethylene ~28% cotton rags ~21% paper	12 kW (11 BTU/s)	53,200 (BTU)	The trash can overturned during the test and approximately 1/2 the paper and packing material spilled out. It was primarily this material which actually burned during the test.
SNL - Nowlen Test #3	2.5 gal polyethylene bucket (.788 kg) 16 oz box of Kimwipes (.562 kg) 1 qt acetone (.747 kg) Polyethylene wash bottle (.079 kg)	Total 2.2 kg (4.8 lb) 40% polyethylene 26% tissue paper 34% acetone	145 kW (138 BTU/s)	23,750 (BTU)	During Test 3, the acetone spilled from the bucket approximately 6 minutes after ignition, resulting in a large flash of burning acetone. This type of behavior was not observed in Test 4, or any of the cabinet fire tests (Chavez) which used this ignition source. When this spike in the heat release rate is removed (See NUREG/CR-4679, Figure 50b), the peak heat release rate is about 34 kW (32 BTU/s).

Table G-7
Transient Ignition Sources (Continued)

Test	Fuel Package	Composition	Peak Heat Release Rate	Total Heat Content	Comment
SNL - Nowlen, Test #2	12" x 16" x 12" cardboard box (.395 kg) 16 oz box of Kimwipes (.562 kg) 1 qt acetone (.747 kg) Polyethylene wash bottle (.079 kg)	Total of 1.78 kg (3.9 lb) 22% cardboard 32% tissue paper 42% acetone 4 % polyethylene	109 kW (104 BTU/s)	35,150 (BTU)	
SNL - Nowlen, Test #1	12" x 16" x 12" cardboard box (.395 kg) 16 oz box of Kimwipes (.562 kg) 1 qt acetone (.747 kg) Polyethylene wash bottle (.079 kg)	Total of 1.78 kg (3.9 lb) 22% cardboard 32% tissue paper 42% acetone 4 % polyethylene	97 kW (92 BTU/s)	45,600 (BTU)	
SNL - Nowlen Test #4	2.5 gal polyethylene bucket (.788 kg) 16 oz box of Kimwipes (.562 kg) 1 qt acetone (.747 kg) Polyethylene wash bottle (.079 kg)	Total 2.2 kg (4.8 lb) 40% polyethylene 26% tissue paper 34% acetone	34 kW (32 BTU/s)	46,550 (BTU)	
SNL - Chavez Screening Test #5	2.5 gal polyethylene bucket (.788 kg, estimated) Polyethylene wash bottle (.079 kg, estimated) 16 oz box of Kimwipes (.455 kg) 1 qt acetone (.747 kg, estimated)	Total 2.1 kg (4.6 lb) 40% polyethylene 22% tissue paper 36% acetone	32 kW (30 BTU/s)	68,500 (BTU)	Chavez performed five screening tests involving two fuel packages. Only the heat release rate for Test #5 is reported in the reference document. Heat release rates for the other tests are reported to be less severe than test #5.

Table G-7
Transient Ignition Sources (Continued)

Test	Fuel Package	Composition	Peak Heat Release Rate	Total Heat Content	Comment
SNL - Chavez Screening Test(s)	Computer paper box (.395 kg, estimated) 16 oz box of Kimwipes (.455 kg) 1 qt acetone (.747 kg, estimated)	Total 1.6 kg (3.5 lb) 25% cardboard 28% tissue paper 47% acetone	<32 kW (<30 BTU/s)	29,200 (BTU)	This fuel package may also contain a polyethylene container for the acetone. Chavez performed five screening tests involving two fuel packages. Only the heat release rate for Test #5 is reported in the reference document. Heat release rates for the other tests are reported to be less severe than test #5.
LBL - Von Volkinburg 30 lb wood crib	Wood pieces, White fir (13.65 kg) Wood excelsior, shredded and fluffed (.45 kg) Absolute ethyl alcohol (.118 l) (~.75 kg, estimated)	Total ~14.9 kg, estimated (32.8 lb) 92% wood 3% excelsior (wood shavings) 5% ethyl alcohol	327 kW (311 BTU/s)	30,811 (KCal)	The wood pieces were 1-1/4" × 1-1/4" × 15" in size. The precise arrangement of the sticks is not reported. The wood excelsior was spread on the floor under the wood crib and soaked in alcohol to provide a uniform ignition source for the wood.
LBL - Von Volkinburg 20 lb wood crib	Wood pieces, Douglas fir (9 kg) 100 cc (.95 qt) JP-4 (~.75 kg, estimated)	Total 9.75 kg (21.5 lb) 92% wood 8% JP-4	217 kW (206 BTU/s)	26,752 (KCal)	The wood pieces were 1-1/4" × 1-1/4" × 15" in size, arranged in eight layers of five sticks each.
LBL - Von Volkinburg, 14 lb wood crib	Wood pieces, Douglas fir (6.36 kg) 100 cc (.95 qt) JP-4 (~.75 kg, estimated)	Total 7.1 kg (15.6 lb) 90% wood 10% JP-4	186 kW (177 BTU/s)	17,590 (KCal)	The wood pieces were 1-1/4" × 1-1/4" × 14" in size, arranged in eight layers. The two bottom layers have two sticks each, and the other six layers have four sticks each.
NBS - Lee, clothing	4.5 kg clothing	4.5 kg (9.9 lb) 100% textile	60 kW (57 BTU/s)	N/A	Clothing piled .3 m high on the floor. Lee notes that this heat release rate is low compared to fuel packages with similar packing densities. He states: “The reason for this low rate was that fire penetration into the piles of clothes and fabrics was limited by the pile height of 0.3 m. Consequently, pyrolysis of the combustibles at depths greater than 0.3 m, which certainly happened for the other trash fires [i.e., Cline and Von Volkinburg] could not occur and contribute to these fires.”

Table G-7
Transient Ignition Sources (Continued)

Test	Fuel Package	Composition	Peak Heat Release Rate	Total Heat Content	Comment
NBS - Lee, fabric	2.7 kg fabric	2.7 kg (5.9 lb) 100% textile	50 kW (48 BTU/s)	N/A	Fabric piled .3 m high on the floor. See comment about heat release rates for Lee, clothing.
SNL - Nowlen Test #9	30 gal. polyethylene trash can (3.6 kg) Polyethylene liner (.035 kg) Paper (1.5 kg)	Total of 6.4 kg (14.1 lb) 57% polyethylene 23% paper	50 kW (48 BTUTU/s) during the first 15 minutes when the fuel was paper, cotton, and plastic. 113 kW (107 BTU/s) in the last 40 minutes when the fuel was primarily a liquid plastic pool	192,000 (BTU)	Within 15 minutes of ignition, the waste basket had melted away almost entirely leaving a pile of burning paper, cotton, and plastic . . . Shortly thereafter, this pile of burning material toppled resulting in a surge in fire intensity. As the packing material burned away a liquid plastic pool fire became the dominant mode of burning. This pool fire continued to burn for an additional 40 minutes, flaring up to high intensities twice during that period.
LBL - Von Volkinburg, Rubbish bag	Straw and grass cuttings (1.55 kg) Eucalyptus duff (2.47 kg) 32 gal polyethylene trash bag (.04 kg)	Total 4.1 kg (9 lb) 38% straw and grass cuttings 61% eucalyptus duff >1% polyethylene	343 kW (325 BTU/s)	93,000 (BTU)	One of four tests used as the basis for FIVE's recommended heat release rate for transient fires.
SNL - Cline Test #4	Rags (11.4 kg) Paper towels (7.7 kg) Plastic products (gloves and tape) (5.9 kg) Methyl alcohol (5.9 kg) Two 40 gal. polyethylene trash bags (.07 kg, estimated)	Total of ~31 kg (68 lb) ~37% rags ~25% paper towels ~19% plastic products ~19% methyl alcohol <1% polyethylene	119 kW (113 BTU/s)	N/A	Contents divided equally between the two trash bags. See comment for Cline Test #3.
SNL - Cline Test #11	Rags (11.4 kg) Paper towels (7.7 kg) Plastic products (gloves and tape) (5.9 kg) Methyl alcohol (5.9 kg) Two 40 gal. polyethylene trash bags (.07 kg, estimated)	Total of ~31 kg (68 lb) ~37% rags ~25% paper towels ~19% plastic products ~19% methyl alcohol <1% polyethylene	119 kW (113 BTU/s)	N/A	Contents divided equally between the two trash bags. See comment for Cline Test #3.

Table G-7
Transient Ignition Sources (Continued)

Test	Fuel Package	Composition	Peak Heat Release Rate	Total Heat Content	Comment
SNL - Cline Test #3	Crumpled computer paper (9.1 kg) 2 polyethylene trash bags (.07 kg, estimated)	Total 9.2 kg (20 lb) 99% paper 1% polyethylene	109 kW (104 BTU/s) See comment.	N/A	Nowlen says that Cline's heat release rates are unreliable. "The data gathered and reported as a part of the Ignition Source Fire Tests [Cline] included the oxygen depletion levels in the test enclosure. However, subsequently identified problems with the test setup have indicated that these values are in significant error. The oxygen concentration values reported by Cline are considered to significantly underestimate the actual levels of oxygen depletion during these tests. [Low oxygen depletion values would result in underpredicted heat release rates.] It is therefore inappropriate to attempt to use these values to estimate the heat release rates of the test fires." (Nowlen, NUREG/CR-4679)
SNL - Cline Test #5	Crumpled computer paper (13.6 kg) Two 50 gal. plastic trash cans (15 kg)	Total 28.6 kg (63 lb) 48% paper 52% plastic	109 kW (104 BTU/s)	N/A	See comment for Cline Test #3.
SNL - Cline Test #10	Crumpled computer paper (13.6 kg) Two 50 gal. plastic trash cans (15 kg)	Total 28.6 kg (63 lb) 48% paper 52% plastic	109 kW (104 BTU/s)	N/A	See comment for Cline Test #3.

Table G-7
Transient Ignition Sources (Continued)

Test	Fuel Package	Composition	Peak Heat Release Rate	Total Heat Content	Comment
LBL - Von Volkinburg, 6.6 liter wastebasket	6.6 liter polyethylene trash container (.23 kg) 12 quart size paper milk cartons coated with polyethylene (.45 kg)	Total .68 kg (1.5 lb) 34% polyethylene 66% poly-coated paper	64 kW (61 BTU/s)	N/A	Half the milk cartons were opened and stacked upright in the trash container to form tubes. The other half were torn into pieces and placed within the tubes formed by the upright milk cartons. This datum was discarded for the same reasons as LBL - Von Volkinburg 121 liter wastebasket. If this datum had not been discarded, it would have been classified as “human occupancy trash.” It’s omission does not significantly change the heat release rate profile for that bin.
SNL - Cline Test #9	Crumpled computer paper (4.6 kg) Folded computer paper (31.8 kg) Two polyethylene trash bags (.07 kg estimated)	Total 36.5 kg (80 lb) 13% crumpled paper 87% folded paper <.5% polyethylene	40 kW (38 BTU/s)	N/A	See comment for Cline Test #3.

Table G-8
Properties of Selected Materials. Revision of Table 2 in ERPI TR-100443

Fuels	Heat of Combustion MJ/kg	Ideal Mass Loss Rate kg/s-m^2	Combustion Efficiency	Heat Release Rated kW/m^2	Reference
Solid Fuels					
Cardboard boxes	18	0.014	0.7	176	FIVE
Polyethylene (PE)	43.4	0.026	0.88	993	FIVE
Polypropylene	43.2	0.024	0.89	923	FIVE
Polystyrene	39.8	0.034	0.69	934	FIVE
Polyurethane	23-28	0.025	0.65	–	FIVE
Plyvinyl Chloride (PVC)	16.4	0.016	0.35	92	FIVE
Wood (Typical values)	18	0.011	0.7	139	FIVE
Stored Commodities					
Wood pallets	per m of height			2250	FIVE
Wood or PMMA					
Vertical surface	per m^2 of surface			250	FIVE
Horizontal surface	per m^2 of surface			750	FIVE
Polystyrene (Solid)					
Vertical surface	per m^2 of surface			650	FIVE
Horizontal surface	per m^2 of surface			1350	FIVE
Polypropylene (Solid)					
Vertical surface	per m^2 of surface			450	FIVE
Horizontal surface	per m^2 of surface			800	FIVE
Cardboard cartons					
Compartmented	stacked 4.6 m high			1700-4200	FIVE
w/PE bottles	stacked 4.6 m high			6200-7600	FIVE
w/PS bottles	stacked 4.6 m high			14000-20900	FIVE
w/PVC bottles	stacked 4.6 m high			3400-7000	FIVE
Metal lined	stacked 4.6 m high			2800	FIVE
Polyurethane board	stacked 4.6 m high			1900-3200	FIVE
Cable Materials					
PE	20	0.018	–	360	CompBRNIIIe
PVC	22	0.019	–	418	CompBRNIIIe
PE/PVC	20	0.018	–	360	CompBRNIIIe

This section provides examples of the applied recommended HRR values for the different types of electrical cabinets in commercial nuclear power plants. The information in these examples may be used for assessing the applicability of the recommended values. Visual observations of representative cabinet types in the plant of study are recommended.

- 4160V Switchgear: The switchgear cabinet in Figure G-5 is vertically divided into three compartments separated by metal partitions that cover the height of the cabinet but are not airtight. The back compartment contains the busbar and power cable. The primary combustible is the insulation on the power cables. The center compartment contains little combustibles. The control circuits are located in the front compartment. The control wiring is tightly bundled on one side of the front compartment. Because of the single bundle control wiring and separation of the control and power cables in separate compartment, the fire in the switchgear will remain confined to a single bundle and the distribution with 65 BTU/s and 200 BTU/s as the 75th and 98th percentiles can be assumed if the cables are qualified.

- 480V MCC: Figure G-6 is typical of MCCs. This MCC consists of "buckets" that contain the electrical components and a single wireway that runs through the right side of this MCC from top to bottom. The cables in the wireway are mostly bundled with single wires coming off and feeding individual components in the bucket. The main combustibles are confined to the tightly bundles cables in the wireway. Therefore, the MCCs of this type with qualified cable are considered to satisfy the criteria established for a 65 BTU/s HRR as the 75th percentile. In contrast, if the cabinet has unqualified cable, and assuming a closed door, a value of 220 BTU/s would be assigned as the 75th percentile.

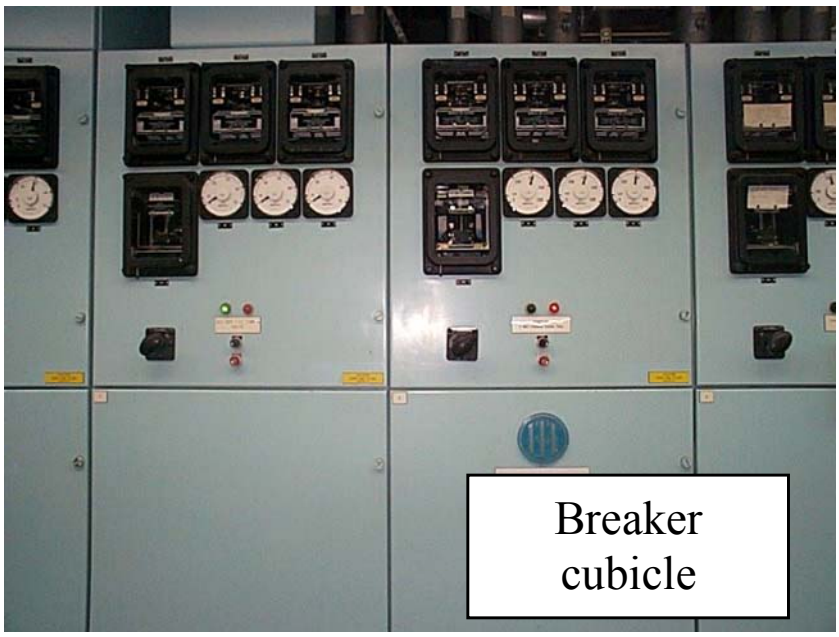

Figure G-2
4.16 kV Switchgear (Front)

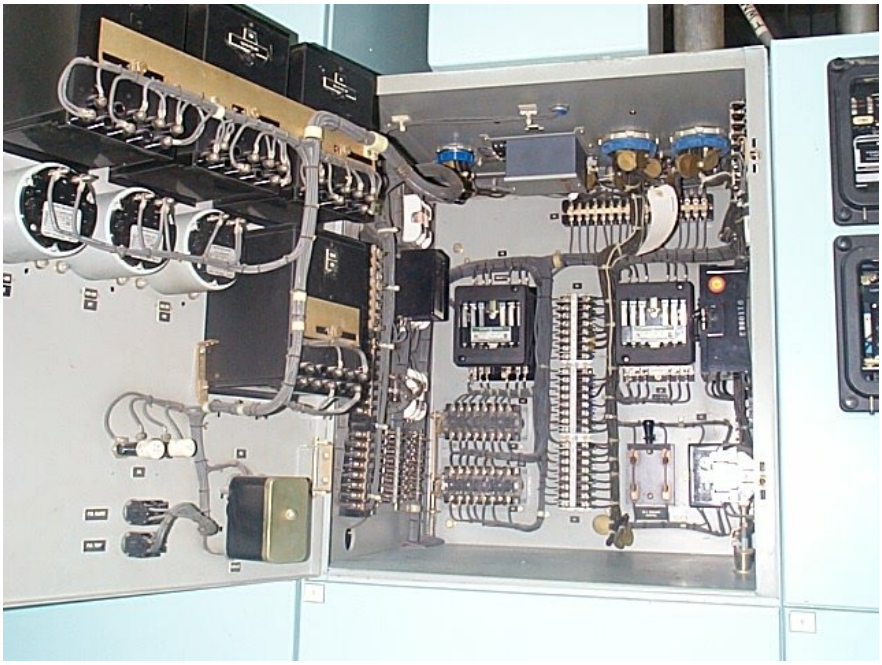

Figure G-3
Front Panel (Open)

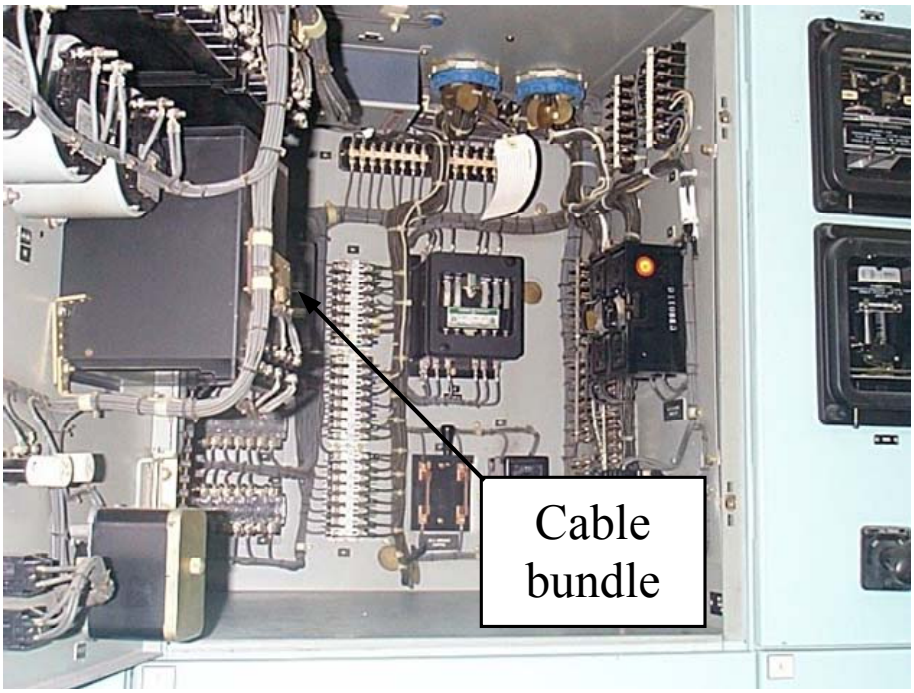

Figure G-4
Front Panel (Open)

Figure G-5
Rear Panel

Figure G-6
480 V Switchgear (Front)

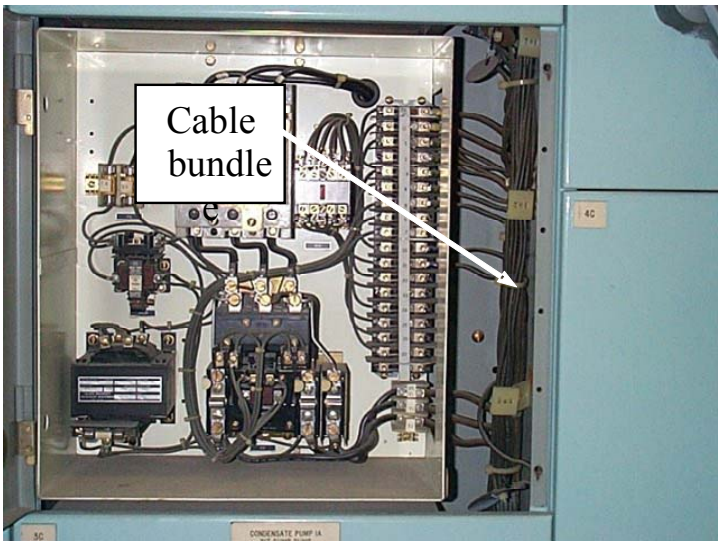

Figure G-7
480 V Switchgear (Open)

- Distribution Panel: Figure G-7 illustrates a free-standing cabinet with low combustible loading in two bundles one on either side of the cabinet. The breaker box located in the center of the cabinet separates the bundles. The breakers are installed inside a metal casing. The bundles exit the top of the cabinet through separate penetrations. However, a few cables do mix from the two bundles at the top of the cabinet. The distribution panel of this configuration with qualified cable are considered to satisfy the criteria established for a 65 BTU/s as the 75th percentile heat release rate because of separation of the two tightly bundles by more than 3′ and low combustible loading.

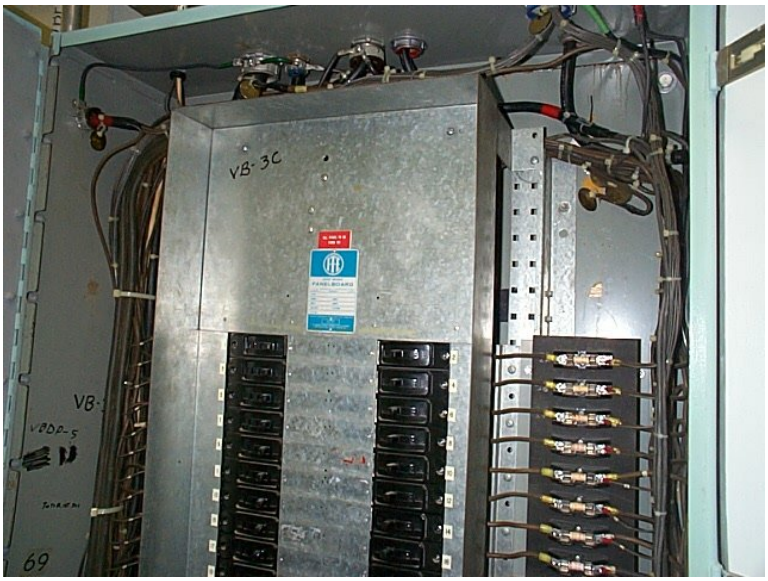

Figure G-8
Distribution Panel (Front)

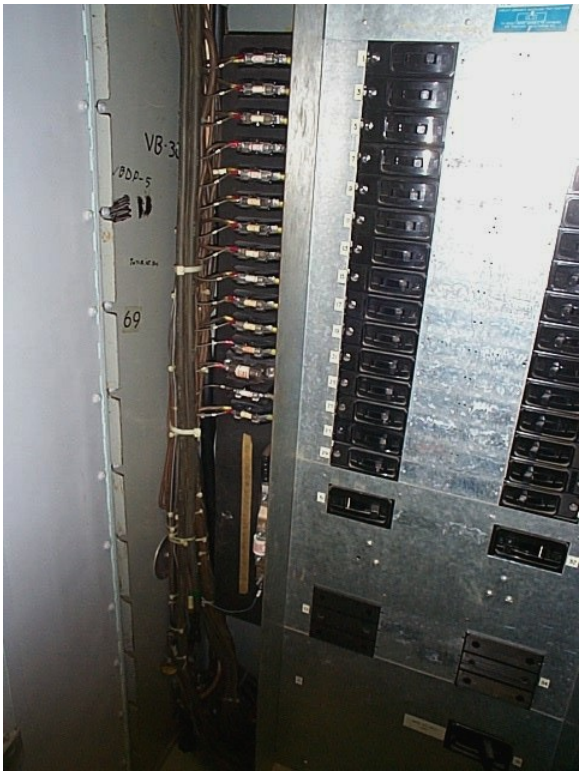

Figure G-9
Distribution Panel (Front)

- 480V Switchgear: The configuration of the 480V switchgear (Figure G-10) is similar to the 4KV switchgear in that the power and control sections are separated. The control section is similar to the 4KV switchgear in that the control wiring is tightly bundled on one side of the front compartment. Most of the sources of ignition (i.e., relays and switches) are located in the control side of the switchgear. The power in the rear compartment runs through cables that are bundled and separated. Since there are sources of ignition in this rear panel (contacts, etc), and two qualified cable bundles are observed (Figure G-13), a value of 200 BTU/s is recommended as the 75th percentile. A value of 220 BTU/s as the 75th percentile would have been assigned for this close cabinet with unqualified cable.
- Inverter: The inverter (Figure G-14) was selected for this category as the limiting configuration since they are more likely to contain multiple bundles. This inverter is a medium-sized cabinet, which contains low amount of combustibles. Control wiring is limited and more bundled, but does traverse horizontally. The cabinet is vented on the top. The cabinet also contains breakers, switches and instruments. The configuration of this inverter is not similar to any of the tested configurations in the Sandia or VTT tests. Horizontal cables may help propagation of fire inside the cabinet where vented top prevents formation of hot gases. The inverter, however, could exhibit heat release rate in excess of 65 BTU/s if fully involved. Based on the overall approach described in this section, a value of 200 BTU/s as the 75th percentile is recommended if cables are qualified.

Figure G-10
480 V Switchgear (Front)

Figure G-11
Rear Panel

Figure G-12
Rear Panel

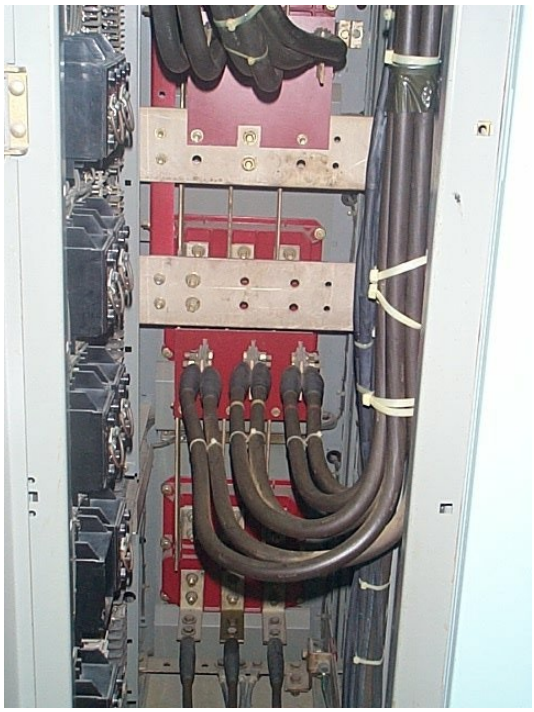

Figure G-13
Rear Panel

Figure G-14
Distribution Panel (Front)

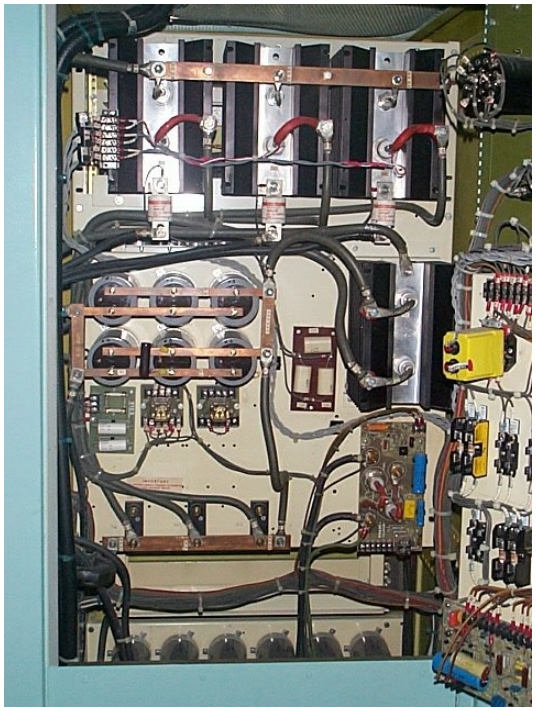

Figure G-15
Distribution Panel (Open)

- Control panel: There are generally three different sizes of control cabinets:
  - Small, wall-mounted cabinets that are fully enclosed. These are located throughout the plant as local controllers for one or more pieces of equipment. They contain little combustibles and are screened as nondamaging ignition sources.
  - Medium-size cabinets that can be enclosed or vented. These cabinets are the most typical of the floor-based control cabinets. Some of these cabinets contain a single bundle of cables located at one side of the cabinet. Others contain two bundles of cables, one on each side of the cabinet (separated by 3′ or more). A small number of wires, however, may traverse throughout the cabinet for connections to the components. The panel generally has a vent near the top of the cabinet, which will prevent accumulation of hot gases at the top of the cabinet and ignition of the other bundle. Therefore, the fire will remain confined to one bundle, which allows the use of 65 BTU/s for the 75th percentile with qualified cable.
  - Large walk-through control cabinets. Figure G-16 shows the Waste Disposal Control Panel as a sample of such cabinets. These cabinets are generally vented and may contain two or more bundles of cables distributed throughout the cabinet. It is assumed that a fully involved fire inside one of these panels can generate a HRR in excess of 65 BTU/s (e.g., 190 BTU/s).

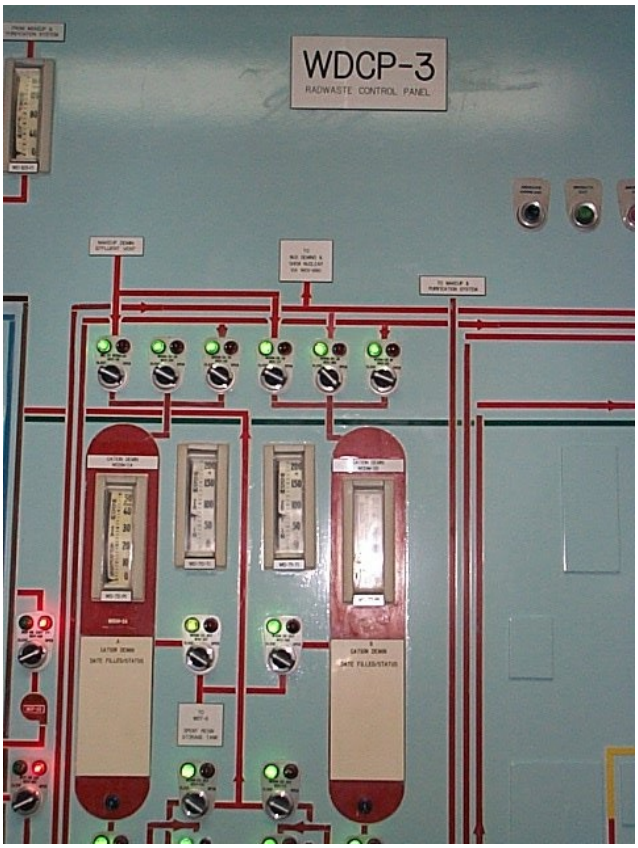

Figure G-16
Control Panel (Front)

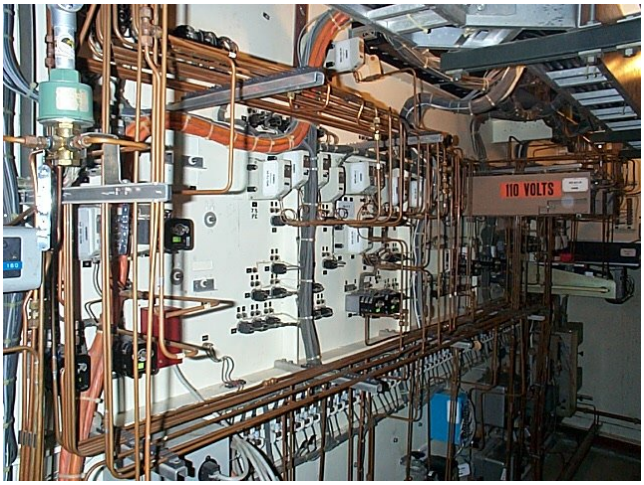

Figure G-17
Back of Front Panel

Another example of relatively large walk-through control cabinets in the main control board, which has a geometry similar to the benchboard cabinets tests reported in NUREG 4527. Figure G-18 shows an example of a main control board.

- Relay Rack: Figure G-19 depicts a sample of relay cabinets. This cabinet contains two tightly bundled wires, one on each side of the cabinet, with terminal boards mounted on each side of the cabinet. Wires run between the bundle and the terminal board. Wires traversing across the rack from one side to another are kept at a minimal. The bundles are about 5′ apart. The cable bundles, however, do come together at the top and bottom of the cabinet. The configuration of the selected relay rack does not preclude involvement of both cable bundles and those at the top, and thus precludes use of 65 BTU/s.

Figure G-18
Rear Access to Control Panel

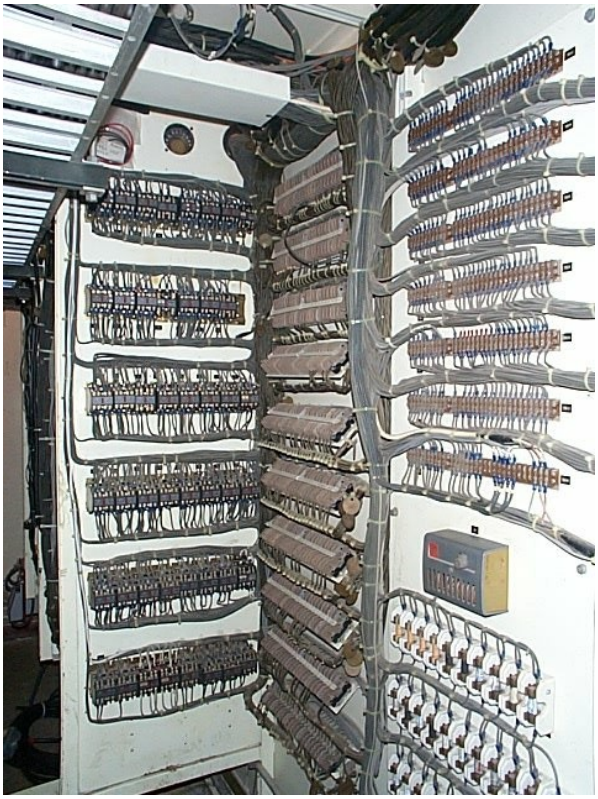

Figure G-19
Back of Rear Face of Control Panel

Figure G-20
Example of a Main Control Board

Figure G-21
Relay Rack (Front)

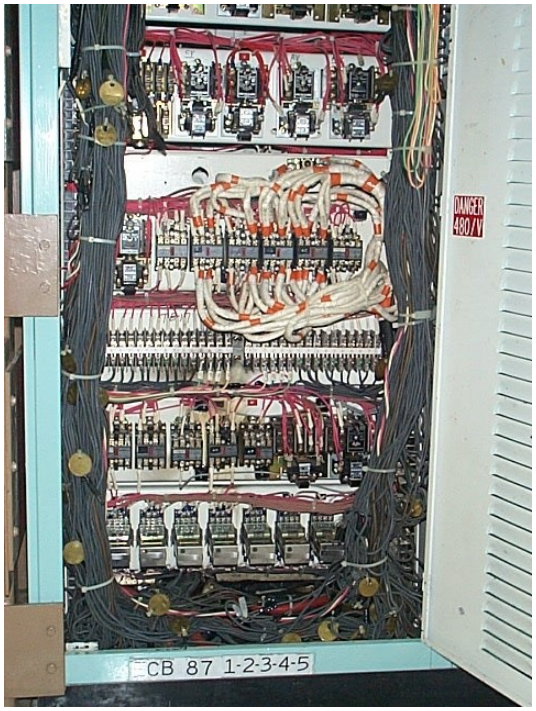

Figure G-22
Cable Bundles

G.8 References

G.1. Mowrer, F. "The Right Tool for the Job," *Fire Protection Engineering*. Winter 2002, Issue No. 13. Page 39.

G.2. NUREG/CR 4527 "An Experimental Investigation of Internally Ignited Fires in Nuclear Power Plant Control Cabinets" Volumes 1 & 2.

G.3. Mangs, Johan and Keski-Rahkonan, Olavi, *Full Scale Experiments on Electronic Cabinets, Technical Research Center of Finland*. VTT Publications 186 and 269, Espoo, Finland, 1996.

G.4. Gottuk, D, White, D. "Liquid Fuel Fires." *SFPE Handbook of Fire Protection Engineering*, 3rd Edition. Chapters 2-15.

Appendix H

Appendix for Chapters 8 and 11, Damage Criteria

H
APPENDIX FOR CHAPTERS 8 AND 11, DAMAGE CRITERIA

H.1 Electrical Cables

H.1.1 Generic Cable Damage and Ignition Criteria

The identification of nearest ignition and damage targets will most often involve the identification of cables as both ignition and damage targets. Often the same cable will represent both targets. For cables, the ignition and damage criteria will be assumed to be the same.

Generic heat flux and temperature criteria for damage and/or ignition are identified in Table H-1. The criteria are specified for two major cable types, thermoset (TS) and thermoplastic (TP). These generic criteria are appropriate for use in the initial screening analysis and when the actual cable type is not known. In the case of a cable raceway housing a mixture of TP and TS cables, the damage criteria for thermoplastic should be applied. (This presumes that ignition of a thermoplastic cable would quickly compromise co-located thermoset cables).

Table H-1
Damage Criteria for Electrical Cables – Generic Screening Criteria for the Assessment of the Ignition and Damage Potential of Electrical Cables

Cable Type	Radiant Heating Criteria	Temperature Criteria
Thermoplastic	6 kW/m^2 (0.5 BTU/ft2s)	205°C (400°F)
Thermoset	11 kW/m^2 (1.0 BTU/ft2s)	330°C (625°F)

Additional rules for application in the target identification task are:

- Cables in conduit will be considered potential damage targets, but not ignition targets.
- Cables in conduit will not contribute to fire growth and spread. The conduit will be given no credit for delaying the onset of thermal damage.
- Cables coated by a fire-retardant coating will be considered as both thermal damage and fire spread targets. No credit is given to the coating for delaying or preventing the onset of damage and/or ignition. However, coatings may be assumed to slow the subsequent spread of fire.
- When identifying damage targets, do not include components directly within or associated with the fire ignition source itself. The fire ignition source will be inherently assumed

damaged given any fire involving itself as the source, so further evaluation of the components as damage targets is unnecessary.

– Example: For an electrical panel fire, all equipment and components within the panel will be assumed to fail. Per the counting methodology, a panel will be defined as a distinct vertical section in this context.

– Example: Given a self-ignited cable fire, all cables in the initiating raceway will be assumed to fail immediately on fire ignition (time zero).

H.1.2 Mixed Cable Insulation/Jacket Type Configurations

There are cables formulated with a thermoset insulation and a thermoplastic jacket, and, potentially, vise-versa. Armored cables may have a bare metal armor exposed, or either a thin thermoset or thermoplastic covering over the metallic armor. For such cases, some special consideration is needed.

In the assessment of whether to treat a cable as a thermoset or thermoplastic, the weakest link will dominate. For example, a cable with a thermoset insulation and a thermoplastic jacket will be treated using the failure criteria of a thermoplastic cable to reflect the reduced resistance to ignition of the jacket material. A cable with a thermoplastic insulation and a thermoset jacket will also be treated as a thermoplastic, due to the likelihood of melting of the insulation material.

The following table provides a decision matrix for the selection of which failure/ignition property set to apply to a given cable.

Table H-2
Cable Properties Decision Matrix for Mixed Cable Insulation/Jacket Configurations

Cable Construction/Configuration		Ignition/Damage Parameter Set to be Used
Insulation Type	Jacket/Covering Type	
TS	TS	TS
TS	TP	See Sect. H.1.3
TP	TS	TP
TP	TP	TP
Armored – TS	TS, or No Cover	TS
Armored – TS	TP Cover	See Sect. H.1.3
Armored – TP	TS, TP, or No Cover	TP

H.1.3 Thermoplastic Jacketed, Thermoset Insulated Cables

In the specific case of a cable with TS insulation and a TP jacket or cover, a decision should be made as to which ignition/damage criteria should apply. The decision will hinge on the whether or not a TP fire might develop in the immediate vicinity of the cables themselves.

The decision matrix in Table H-2 assumes that for a mixed material configuration, the TP material will be the limiting factor. If the insulation is TP, then melting of the insulation will cause failure. If the jacket is TP, then ignition of the jacket may lead to flames engulfing the cable and to a rapid failure of the TS insulation. Hence, for the general case, the failure criteria for TP materials apply for mixed configurations.

However, in some circumstances, it may be appropriate to apply the TS failure criteria. This would be appropriate only in cases where the analyst can reasonably presume that a thermoplastic fire cannot form in the immediate vicinity of the cables themselves. TP materials are unique from TS materials in that TP materials melt on heating whereas TS materials do not melt. For a TS material, the likely fire behavior will involve melting of the material and formation of a burning pool of liquid material. Flames will linger at the melt front of the TS material as well, but the predominant fire will be the burning pool. In contrast, TS materials burn in place.

Given this behavior, if the cable configuration is such that the melting TP material cannot form a burning pool in the immediate vicinity of the cables, then the presumption that direct flame impingement on the cable would quickly compromise the TS insulation would not apply.

Configurations that would be considered conducive to formation of a fire near the cables would include any of the following:

- A cable tray with a substantial load of cables (i.e., at least one full layer of cables).
- Solid bottom cable trays or cable routing ducts regardless of cable loading. This would include a case where the tray bottom is vented (e.g., slotted or louvered).
- Cable trays with bottom covers (e.g., flame shields or a thermal barrier). This includes cases where the bottom cover is vented (e.g., slotted or louvered).
- Cable trays where a cable tray directly below has a top cover (even if that top cover is vented). For this configuration, distance to the cover of the lower tray is a consideration (is the tray within the flame zone of the pool fire?).
- Cable trays where a cable tray directly below contains a substantial load of cables (such that melt material might collect on top of these cables). For this configuration, distance to the top of the cables in the lower tray is a consideration (is the tray within the flame zone of the pool fire?).
- Cables routed directly above an electrical panel where a pool of burning plastic might form on top of the panel and impinge on the tray. For this configuration, distance to the top of the panel is a consideration (is the tray within the flame zone of the pool fire?).
- Cables in a conduit (TP material can burn within the conduit even though no external flame spread is assumed).

- A cable tray with several cables routed in direct contact with each other or as a tightly packed cable bundle.
- A cable air-drop (assuming a pool might form at the bottom of the air-drop).

Configurations that would not be considered conducive to formation of a fire near the cables include the following:

- A ladder-back cable tray with a sparse load of cables (less than a single layer and with significant gaps between and among the cables present).
- A ladder-back cable tray with maintained spacing of installed cables (maintained gaps between cables and cables in no more than a single layer).

Use of the TP damage/ignition criteria is conservative and is necessary no specific justification. If the analyst chooses to apply the TS criteria for a mixed configuration, a justification should be provided.

H.1.4 Specific Data for Specific Cable Types

A range of test data exists characterizing failure criteria for specific materials and for some specific cable brands.[1] Most of the available data applies to thermoset materials rather than thermoplastic. For further information on this subject, NUREG/CR-6834 Appendix A [H.1] provides an annotated bibliography of fire tests where cable failure behavior was monitored. Material and product specific data may be applied when available.

Application of cable-specific data necessitates knowledge of the cable types located in the target raceway. If a raceway includes a mixture of cable types, the ignition/damage criteria for all cables in the raceway should be based on the limiting cables – that cable with the lowest damage/ignition threshold. The basis for this approach is similar to that discussed in Section H.1.3 relating to raceways or cables with mixed cable types. Ignition of the limiting cables will lead to rapid degradation and failure of any co-located cables.

Tables of material and product specific cable failure thresholds have been published in SAND92-1404C [H.2]. These are reproduced below as Tables H-3 and H-4.

[1] Note that cable ignition and failure thresholds were reported in a series of EPRI reports published during the late 1970s through 1980s, and in various related and subsidiary publications by Factory Mutual Research Corporation through the mid 1990s. These values are no longer considered valid due errors in the data extrapolation methods applied. Examples include EPRI NP-1200, EPRI NP-1767, EPRI NP-1881, and other similar and related reports. While the raw measured data remain valid, the extrapolated “critical heat flux” and “critical temperature” values should not be applied in any fire PRA analysis or application. For further information see SAND88-2161C [H.4].

Table H-3
Summary of General Material Specific Cable Thermal Damage Criteria as Reported in Table 6 of Reference H.2

Cable Insulation Material	Reported Failure Temperature Range (°C)	Number of Tested Samples	Recommended Failure Threshold (°C)
Cross-Linked Poly Olefin (XLPO) *including* the specific subclass Cross-Linked Polyethylene (XLPE)*	299-388	13	299
* for the specific subclass XLPE:	320-388	12	320
Ethylene Propylene Rubber (EPR)	370-400	16	370
Silicone Rubber	396-400	2	396
Kerite FR	372-382	2	372
Polyimide or Kapton	399	1	399

Note: All failure temperatures are based on a failure criterion of less than 100 ohms insulation resistance over 100 meters of cable (100Ω/100m). If a more stringent failure criterion would apply to a given circuit, refer to NUREG/CR-5655 [3] for additional data.

Table H-4
Failure Temperatures for Specific Cable Products as Reported in Table 5 of Reference H.2

Cable Manufacturer	Description of Cable Tested	Failure Threshold (°C)
Brand Rex	Cross-linked polyethylene (XLPE) Insulation, Chlorosulfonated Polyethylene (CSPE) Jacket, 12 AWG, 3-Conductor (3/C), 600 Volt (V)	385
Rockbestos	Firewall III, Irradiation XLPE Insulation, Neoprene Jacket, 12 AWG, 3/C, 600 V	320-322
Raychem	Flamtrol, XLPE Insulation, 12 AWG, l/C, 600 V	385-388
Samuel Moore	Dekoron Polyset , Cross-Linked Polyolefin (XLPO) Insulation, CSPE Jacket, 12 AWG, 3/C and Drain	299-307
Anaconda	Single Conductors Removed From: Anaconda Y Flame- Guard Flame Retardant (FR) Ethylene Propylene (EP), Ethylene Propylene Rubber (EPR) Insulation, Chlorinated Polyethylene (CPE) Jacket, 12 AWG, 3/C, 600 V	381
Anaconda	Anaconda Flame-Guard EP, EPR Insulation, Individual CSPE Jacket, Overall CSPE Jacket, 12 AWG, 3/C, l000 V	394
Okonite	Okonite Okolon, EPR Insulation, CSPE Jacket, 12 AWG, l/C, 600 V	387
Samuel Moore	Dekoron Dekorad Type 1952, Ethylene Propylene Diene Monomer (EPDM) Insulation, Individual CSPE Jackets, Overall CSPE Jacket, 16 AWG, 2/C Twisted-Shielded Pair (TSP), 600 v	370-372
Kerite	Kerite 1977, FR Insulation, FR Jacket, 12 AWG, l/C, 600 V	372-382
Rockbestos	RSS-6104/LE Coaxial Cable, 22 AWG, l/C Shielded	278
Rockbestos	Firewall Silicone Rubber Insulation, Fiberglass Braided Jacket, 16 AWG, l/C, 600 V	396
Champlain	Polyimide (Kapton) Insulation, Unjacketed, 12 AWG, l/C	399
BIW	Bostrad 7E, EPR Insulation, Individual CSPE Jackets, Overall CSPE Jacket, 16 AWG, 2/C TSP, 600 V	384

Note: All failure temperatures are based on a failure criterion of less than 100 ohms insulation resistance over 100 meters of cable (100Ω/100m). If a more stringent failure criteria would apply to a given circuit, refer to NUREG/CR-5655 [H.3] for additional data.

H.2 Other Equipment

For major components such as motors, valves, etc., the fire vulnerability will be assumed to be limited by the vulnerability of the power, control, and/or instrument cables supporting the component. For other cases, the following is recommended:

- If a scenario should arise involving solid-state control components as a thermal damage target, the failure criteria to be applied in screening are 0.25 BTU/ft^2 and 200°F. The criteria for ignition of the components will assume properties similar to thermoplastic cables (0.5 BTU/ft^2 and 400°F).
- Pipes and water tanks constructed of ferrous metal will be considered invulnerable to fire damage.
- Passive components (e.g., flow check valves) will be considered invulnerable to fire.

H.3 References for Appendix H

H.1 LaChance, J.L., Nowlen, S.P., Wyant, F.J., Dandini, V.J., *Circuit Analysis - Failure Mode and Likelihood Analysis*, NUREG/CR-6834, SAND2002-1942P, USNRC, Sept. 2003.

H.2 Nowlen, S.P. and M.J. Jacobus, "The Estimation of Electrical Cable Fire-Induced Damage Limits," SAND92-1404C, presented at Fire and Materials 1st International Conference and Exhibition, Sept. 24-25, 1992, Washington DC.

H.3 M. J. Jacobus, G. F. Fuehrer, *Submergence and High Temperature Steam Testing of Class 1E Electrical Cables*, NUREG/CR-5655, SAND90-2629, Sandia National Laboratories, May 1991.

H.4 Nicolette, V.F., and Nowlen, S.P., "A Critical Look at Nuclear Qualified Electrical Cable Insulation Ignition and Damage Thresholds", SAND88-2161C, published in Conference Proceedings of the Operability of Nuclear Systems in Normal and Adverse Environments, ANS/ENS, September 1989.

Appendix I

Appendix for Chapter 9, Examples of Component Circuits Analyses

I
APPENDIX FOR CHAPTER 9, EXAMPLES OF COMPONENT CIRCUITS ANALYSES

Appendix I demonstrates the circuit analysis procedure for a number of circuits, each with particular and, in some cases, unique features or characteristics. The examples discussed below include the following types of circuits:

- A typical ungrounded DC solenoid operated valve (SOV) control circuit,
- A typical motor operated valve (MOV) control circuit,
- A control circuit employing double-pole isolation switches,
- An ungrounded AC MOV control circuit with contacts on the downstream leg and normal contract arrangement,
- An ungrounded AC MOV control circuit with normal contract arrangement, and
- An MOV with redundant main contactors and fully independent control circuits.

I.1 Typical SOV Control Circuit

Figure I-1 shows the block diagram for the component SOV. The valve has three cables associated with it; Cables A, B, and C. Figure I-2 shows a schematic of the control circuit for the SOV in its normal operating state (i.e., deenergized, open, with the red status indication lit). The conductors contained within each cable are also noted on the schematic–P00, N00, R00, G00, SV0, SV1, and SV2.

Prior to conducting the circuit analysis, the analyst determines that there were three possible component failure responses of interest:

- Loss of control over the valve (LOC)
- Erroneous status indication (EI)
- Spurious closure of the valve (SO–Close)

The analyst evaluates this circuit on a cable-by-cable basis assuming an energized source (the hot probe) comes into contact with each conductor in the particular cable under study. For example, the hot probe analysis of Cable B is accomplished by first assuming the source conductor comes into contact with conductor P00, then N00, etc. In each case, the analyst determines the logical response of the circuit when contacted by the postulated source conductor (i.e., hot probe). Contact of a +125 VDC source to P00 has no consequence ("NC") on the behavior or functionality of the circuit or valve. On the other hand, contact of the +125 VDC source to

N00 would likely cause the "-125VDC" fuse to blow, causing a loss of circuit power and thus a LOC condition. Similarly, the hot probe contact with R00 causes no immediate effect on the circuit or valve, but contact with G00 causes the green lamp to light up, thereby resulting in an EI condition. Hot probe contacts with SV1 do not impact the functionality of the SOV because of the isolation provided by the hand switch and the valve position contacts. Contact with SV0, however, energizes the solenoid and causes the valve to close spuriously (SO–Close).

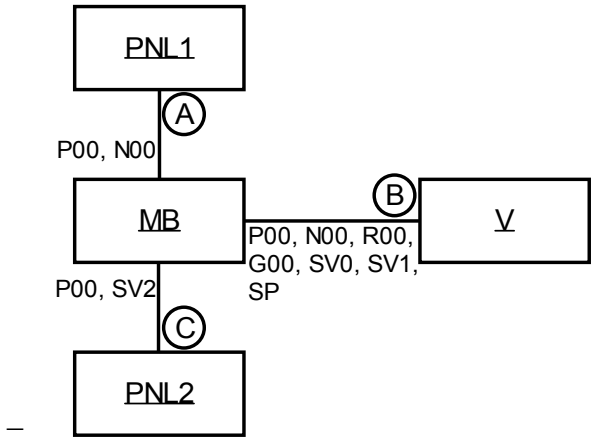

Figure I-1
Block Diagram for Typical SOV Circuit Analysis Example

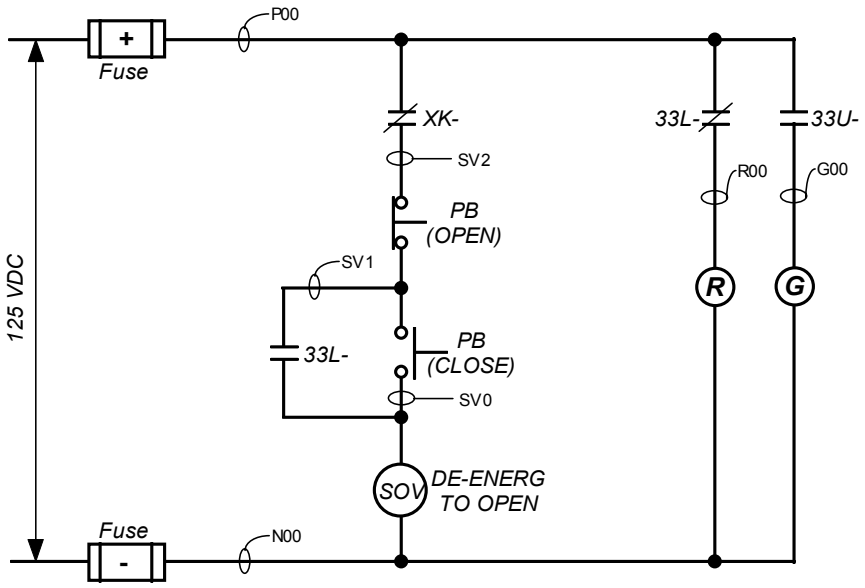

Figure I-2
Electrical Schematic for Typical SOV Circuit Analysis Example

Observe in this case that postulating combinations of hot shorts or hot shorts and grounds within the cables under evaluation does not change the analysis results from a static analysis perspective, and thus the hot probe method is suitable.

Table I-1 shows the results obtained from the hot probe analyses of each cable in the circuit. Note that the scope of this analysis included the investigation of a negative (-125 VDC) energized source as well.

Table I-1
SOV Failure List

Cable	+125 VDC Hot Probe	-125 VDC Hot Probe
A	LOC	LOC
B	LOC, EI, SO - Close	LOC
C	NC	LOC

I.2 Typical MOV Control Circuit

For this example, the MOV control circuit involves only two cables of interest, Cables A and B (see Figure I-3). Assume the failure modes of interest are the same as given for Example I.1, above. Further assume that the initial valve position is open. Note that the power cable for the valve operator (labeled as P) is not a concern, since the valve does not require repositioning. Figure I-4 shows the electrical schematic for the MOV control circuit. Note that the control circuit is a grounded 120 VAC circuit. Thus, the analyst performs the hot probe analysis by assuming a 120 VAC source conductor interacts with each conductor in the cables under study, then by assuming an external ground source does the same.

In the same manner as the analysis of the SOV circuit, the analyst assumes that the 120 VAC source probe contacts the conductors in each cable. For Cable A, contact of the hot probe with Y00 may not have any immediate effect on the circuit, yet it effectively renders the circuit nonfunctional in that should the operator attempt to close the valve, the contactor coil will not operate, because there is no driving potential across it (i.e., 120 VAC on the “upstream” side as well as 120 VAC on the “downstream” side of the operating coil). Interaction of the postulated 120 VAC source conductor with S01 has no immediate impact on the circuit or functionality of the valve. Contact of R00 with the hot probe also has no immediate effect. Touching the hot probe to G00 will induce an erroneous status indication by causing the green lamp to light up. If SC1 becomes energized by the 120 VAC source, no immediate effect is evident; however, if the operator attempts to close the valve, then the valve motor would remain energized until it stalled or a protective device operated (e.g., the overloads). A spurious closure of the valve and subsequent continued motor operation in the closed direction occurs if the hot probe contacts SC0. Finally, if S00 is energized, the valve motor would drive continuously in the open direction until it stalled or a protective device operated.

Similar to the SOV in Example I.1, postulating a combination of hot shorts or hot shorts and grounds within the cables under evaluation does not change the analysis results from a static analysis perspective; thus, the hot probe method is suitable.

A 120 VAC probing of the conductors in Cable B would result in a LOC designation by contact with R00, and possibly an EI through contact with G00.

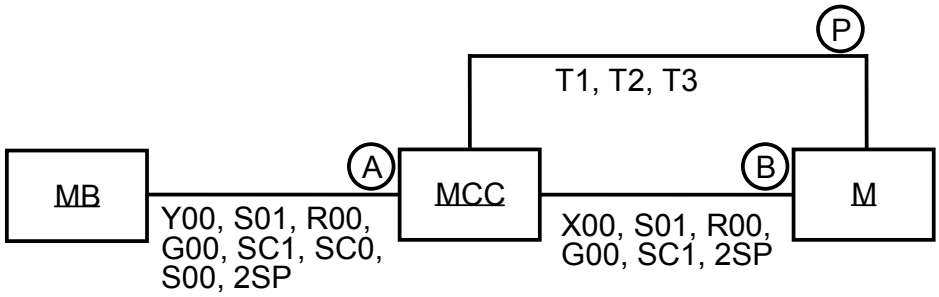

Figure I-3
Block Diagram for Typical MOV Circuit Analysis Example

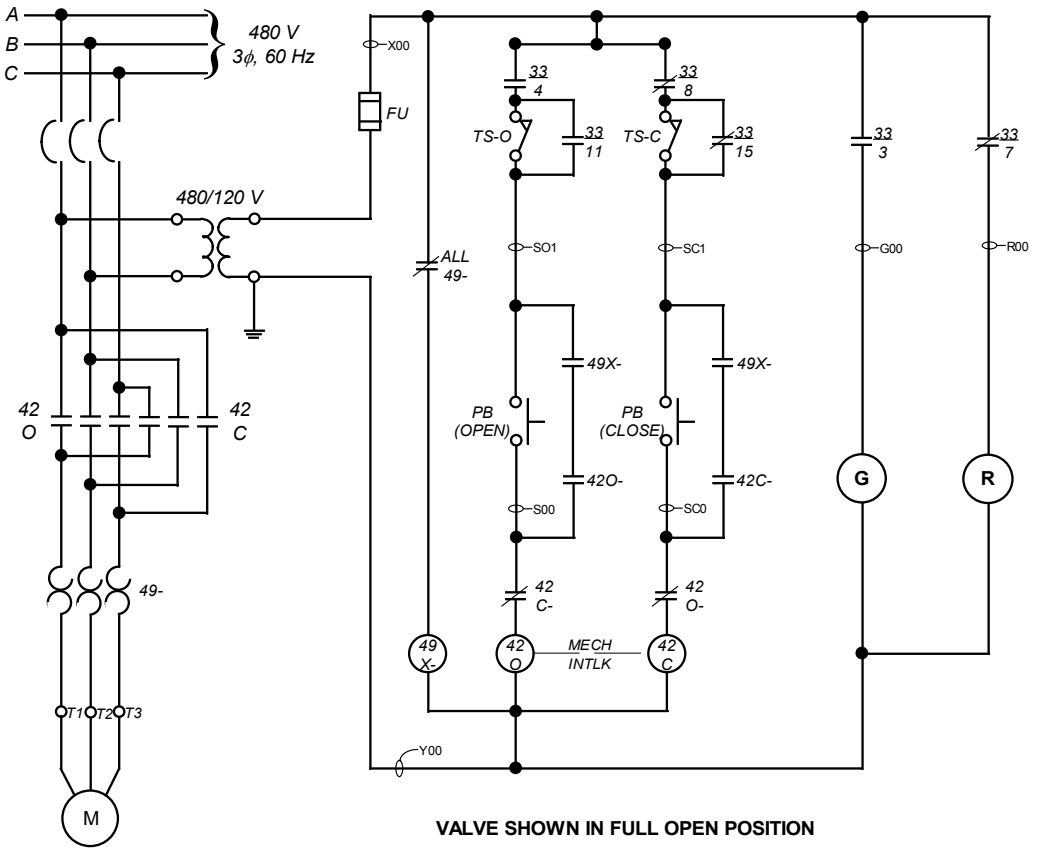

Figure I-4
Electrical Schematic for Typical MOV Circuit Analysis Example

For the grounded probe case, both Cables A and B could result in a LOC situation when the ground touches conductors X00, R00, SC1, or SC0. Table I-2 shows the results of the hot probe analyses for the typical MOV control circuit.

Table I-2
MOV Failure List

Cable	120 VAC Hot Probe	Grounded Probe
A	LOC, EI, SO - Close	LOC
B	LOC, EI	LOC

I.3 Control Circuit with Double-Pole Isolation Switches

A less common control circuit design is shown in Figures I-5 and I-6. Here, the motor is isolated from the power conductors by a succession of isolation switches. In this case, the motor is used to position a speed control valve on a steam turbine. In normal operation, the operator increases (raises) the speed or lowers it by manipulating a momentary switch. The motor can be operated remotely from the control room or locally at the turbine. Remote or local operation is determined by the position of a manual control transfer switch (Device 43) and the contact positions of a control relay. In either case, the momentary control switch closes two sets of contacts for a "raise" or "lower" command.

The block diagram shows two cables, A and B, associated with the motor. Both of these cables allow for remote operation only. Cable routings for local control are of no interest in this analysis, since all are local to the equipment. As Figure I-6 indicates, control power is supplied from a ±48 VDC source; thus, the hot probes assumed for analysis of this circuit will consist of one +48 VDC probe and one -48 VDC probe.

For Cable A, contact of the positive hot probe with P01 has no effect on the circuit or functionality of the motor. Putting the +48 VDC probe in contact with N01 disables the motor (LOC) by either initiating overcurrent protection within the ±48 VDC power supply or by negating the driving potential across the motor. By employing the -48 VDC hot probe on P01, the motor is again disabled for the same reason as given above. There is no consequence if it contacts N01. If F02 comes in contact with the +48 VDC source, the raise function of the motor is disabled, but the motor will still operate in the lower direction. The opposite effect will occur if the -48 VDC source contacts F02. In the same way, F03 can cause failure of the lower function if the positive probe is applied to it while the raise function is affected by the negative probe.

Because of the double-pole isolation features of this circuit, spurious operation of the motor can only result from the application of a dual-polarity hot shorting event. The motor will raise if F03 is biased by the positive source at the same time F02 is made negative, and the motor will spuriously operate in the lower direction if those polarities are reversed. In either case, switching control of the motor to local will isolate it from the hot shorts and allow proper operation.

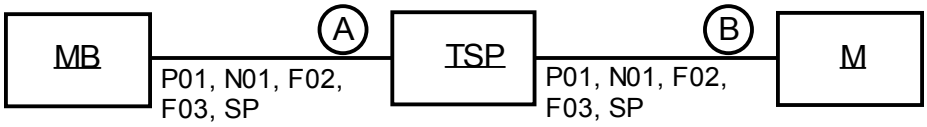

Figure I-5
Block Diagram for Double-Pole Isolation Circuit Example

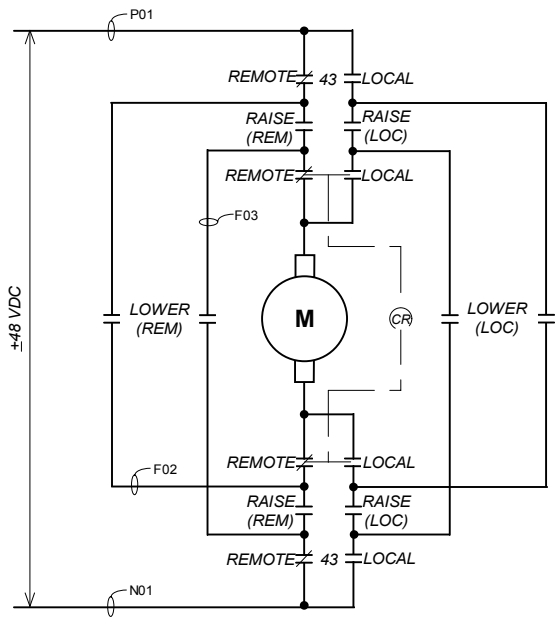

Motor Shown in Remote Operating Mode

Figure I-6
Electrical Schematic for Double-Pole Isolation Circuit Example

Table I-3 shows the results of this analysis for this circuit. Observe that concurrent hot shorts within the cables of interest are necessary to produce a spurious operation. The hot probe method alone would not identify this failure mode and thus care is warranted when reviewing ungrounded DC circuits.

Table I-3
Double-Pole Isolated Motor Failure List

Cable	Remote Operation		Local Operation	
	+48 VDC Hot Probe	-48 VDC Hot Probe	+48 VDC Hot Probe	-48 VDC Hot Probe
A	LOC, SO[1]	LOC, SO[1]	NC	NC
B	LOC, SO[1]	LOC, SO[1]	NC	NC

[1] Spurious operation of the motor requires concurrent dual-polarity hot shorts on F02 *and* F03.

I.4 Ungrounded AC MOV Control Circuit with Contacts on the Downstream Leg and Normal Contact Arrangement

The block diagram for this ungrounded control circuit is shown in Figure I-7, and Figure I-8 shows the circuit schematic. As noted in the figure, the control switches are located on the low side of the operating coils. There is also an interface between the control room panel (MB) and the remote (or alternative) control panel (RSP) through a set of transfer switches (Device 43) located in the transfer switch panel (TSP). Since there is no reference ground, the hot probe analysis will assume sources from both the high (or fused) side of the 120 VAC control power transformer and the low (or return) side.

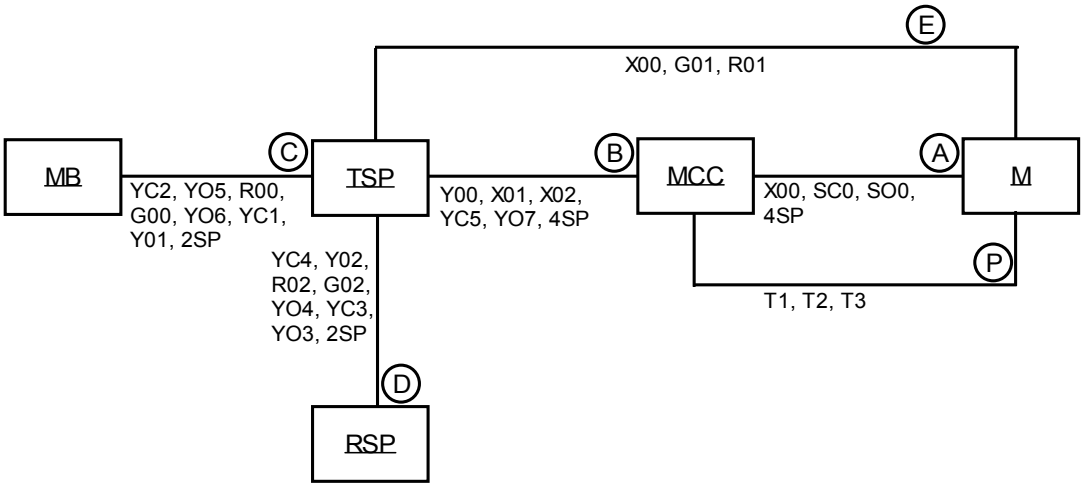

Figure I-7
Block Diagram for Ungrounded, Inverted MOV Control Circuit Example

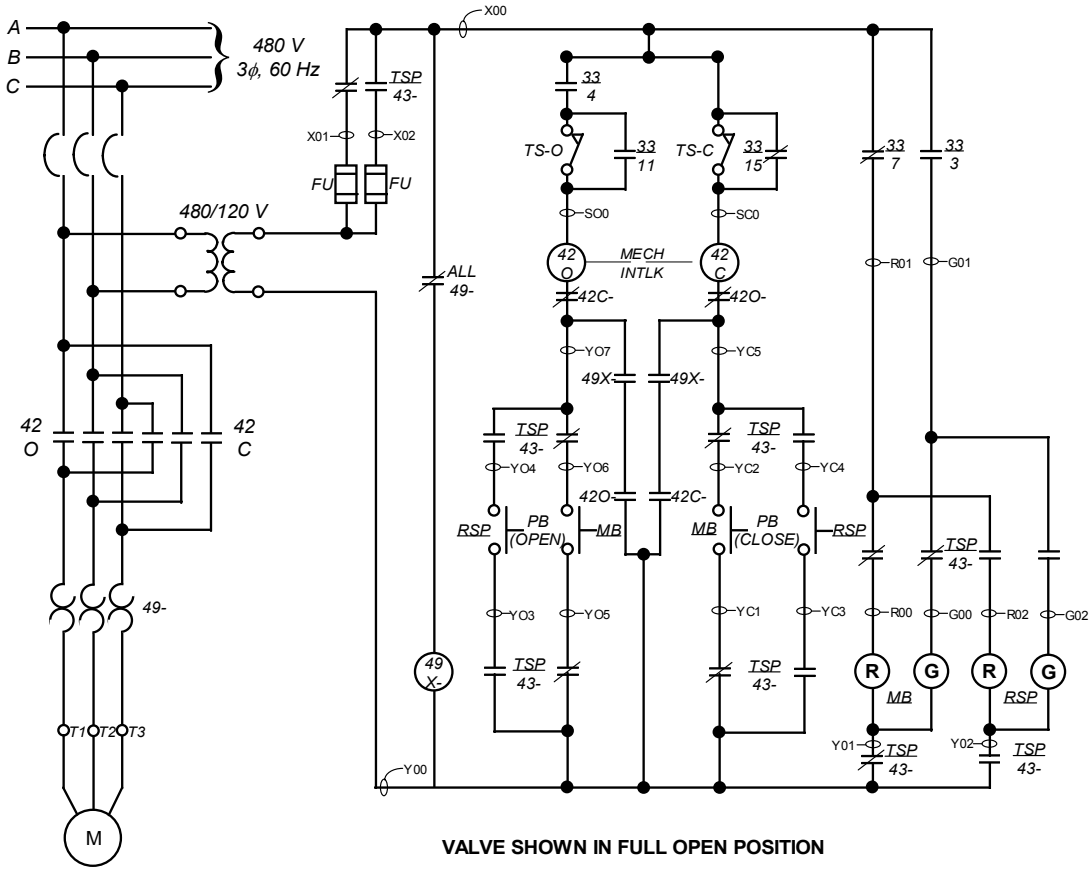

Figure I-8
Electrical Schematic for Ungrounded, Inverted MOV Control Circuit Example

The block diagram shows five control cables, A through E, associated with the valve motor. In a manner similar to the processes described in the previous examples, the analyst assumes that a source conductor (the 120 VAC high side, for example) makes contact with each conductor in the cable under study, and notes the expected circuit/equipment response. Table I-4, below provides the results for this circuit analysis technique for different positions of the transfer switch.

Table I-4
Ungrounded, Inverted MOV Failure List

Cable	Normal Operation		RSP Operation	
	120 VAC (High) Hot Probe	120 VAC (Low) Hot Probe	120 VAC (High) Hot Probe	120 VAC (Low) Hot Probe
A	NC	LOC	NC	LOC
B	LOC	LOC, SO - Close	LOC	LOC, SO
C	LOC, EI	LOC, SO - Close	NC	NC
D	NC	NC	LOC, EI	LOC, SO
E	EI	LOC	EI	LOC

I.5 Ungrounded MOV Control Circuit with Normal Contact Arrangement

Here, the MOV control circuit involves five cables of interest, A through E (see Figure I-9). The cable labeled P is the power cable to the valve motor and is not considered in the circuit analysis for the valve because the example assumes that power is not needed to accomplish the desired condition. Figure I-10 shows the electrical schematic for the MOV control circuit. Note that the control circuit is an ungrounded 120 VAC circuit, thus the analyst will perform the hot probe analysis by assuming sources from first the high (or fused) side of the 120 VAC control power transformer and then the low (or return) side. In this example, the valve is shown in its normally closed position and there is no status indication of the valve position. The principal failure modes of concern are a spurious opening of the valve and a loss of valve control.

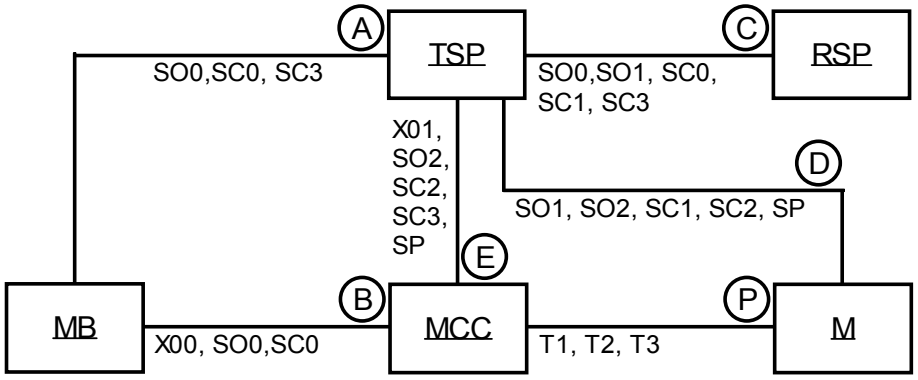

Figure I-9
Block Diagram for Ungrounded MOV Circuit Analysis Example

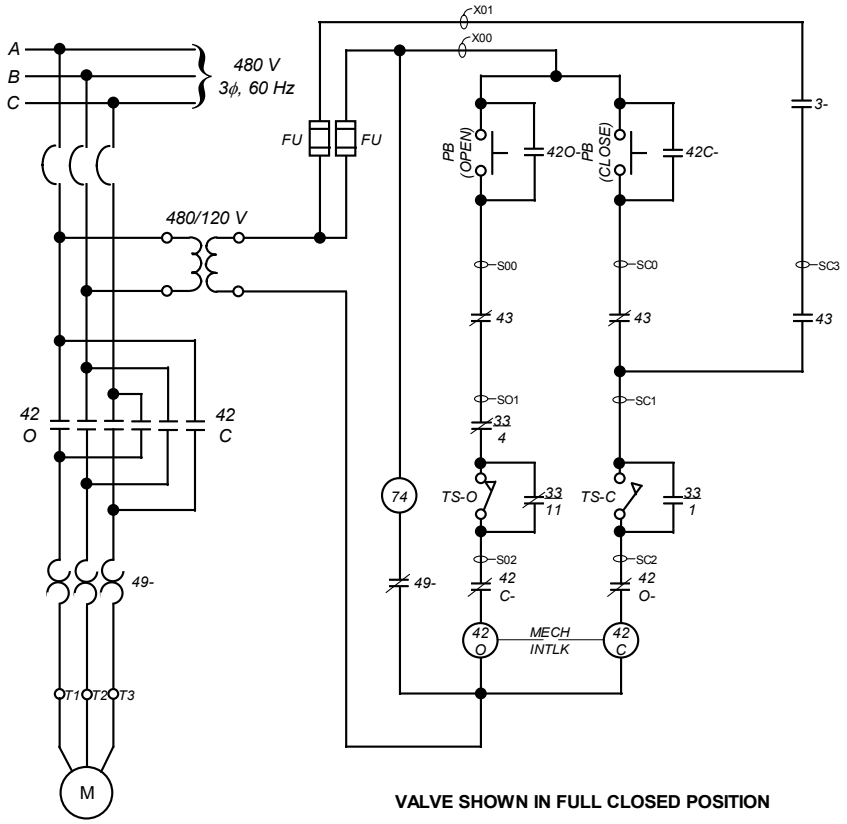

Figure I-10
Electrical Schematic for Ungrounded MOV Circuit Analysis Example

Using the same analysis approach as employed for the ungrounded MOV circuit in Figure I-4, the analyst assumes that the high-side 120 VAC source probe contacts the conductors in each cable. For Cable A, contact of the hot probe with S00 causes the valve to open, contact with SC0 has no immediate effect but can cause the valve to reclose if the operator opens it,[1] and 120 VAC contact with SC3 has no effect. In Cable B, contact of the hot probe with S00 causes the valve to open, contact with SC0 has no immediate effect but can cause the valve to reclose if the operator opens it, and contact with X00 has no effect. Interaction of the 120 VAC source with S01 in Cable C will also cause the valve to open, and contact of the hot probe with SC1 causes the valve to reclose if opened. The remaining conductors in Cable C (S00, SC0, and SC3) behave as discussed previously. Cable D contains conductors S01, SC1, S02, and SC2. A hot probe contact with S01 or S02 causes the valve to open, and contact with SC1 or SC2 causes a reclosing response. In Cable E, probing X01 with the 120 VAC source has no effect, and contact with SC3 will also have no effect; but contact with S02 opens the valve and contact with SC2 forces the valve to reclose.

[1] For the purposes of this example, the unintended reclosing of the valve is being identified as a LOC failure response, as differentiated from the usual “blown fuse” cause for LOC.

Touching the low-side 120 VAC hot probe to S00, S01, or S02 (in Cables A, B, C, D, or E) will cause the X00 fuse to blow if the operator attempts to open the valve. Such a circuit response effectively results in a LOC of the valve since the primary control circuit will then be unpowered. Table I-5 lists the possible failure modes occurring based on these hot probe analyses for each of the cables for this MOV example.

Table I-5
Ungrounded MOV Failure List

Cable	120 VAC (High) Hot Probe	120 VAC (Low) Hot Probe
A	LOC[1], SO - Open	LOC
B	LOC[1], SO - Open	LOC
C	LOC[1], SO - Open	LOC
D	LOC[1], SO - Open	LOC
E	LOC[1], SO - Open	LOC

[1] Indicates loss of valve control due to unintended reclosing of the valve if opened by the operator, not resulting from a loss of circuit power (e.g., blown fuse).

I.6 MOV with Redundant Main Contactors and Independent Control Circuits

Figure I-11 shows the block diagram for this valve and Figure I-12 shows its electrical schematic. This configuration is somewhat unique in that the operator must first actuate the permissive circuit (the upper control circuit in Figure I-12) to provide control power to the primary valve control circuit. These two control circuits are routed in two different cables, as indicated in the block diagram (Figure I-11). Similar to the previous MOV examples, the power cable (labeled P) is not of interest. The control circuit is a grounded 120 VAC circuit; thus, the analyst performs the hot probe analysis by first assuming a 120 VAC source conductor interacts with each conductor in the cables under study, then by assuming an external ground contacts each conductor in turn.

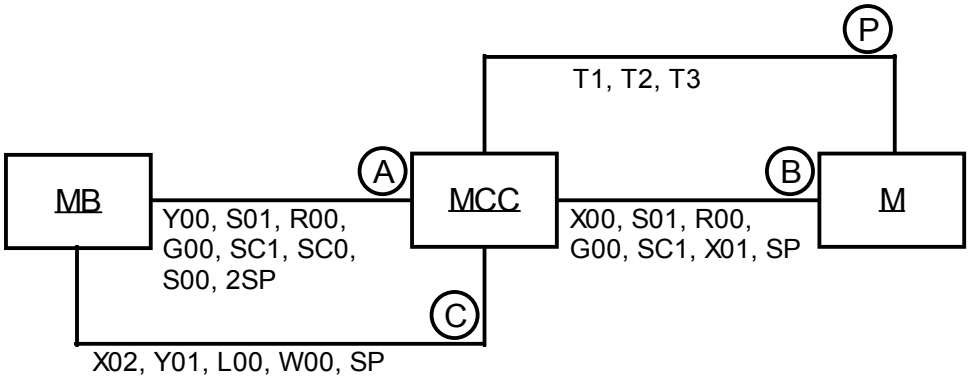

Figure I-11
Block Diagram for MOV with Independent Control Circuits Example

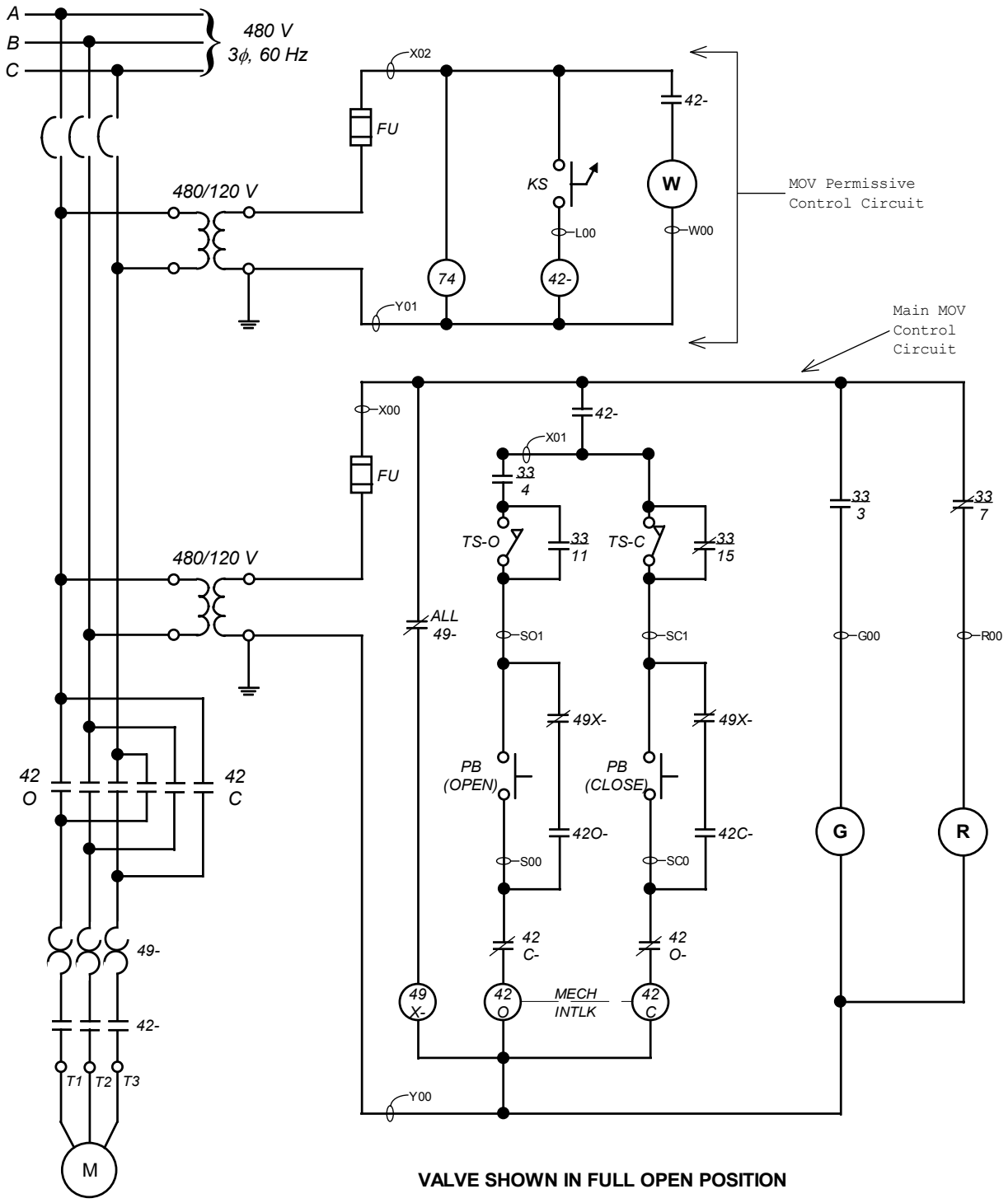

Figure I-12
Electrical Schematic for MOV with Independent Control Circuits

For Cable A, contact of the hot probe with Y00 may not have any immediate effect on the circuit, yet it effectively makes the circuit nonfunctional in that, should the operator attempt to close the valve, the contactor coil will not operate, since there is no driving potential across it (i.e., 120 VAC on the upstream side as well as 120 VAC on the downstream side of the operating coil). Interaction of the 120 VAC source conductor with S01 has no immediate impact on the circuit or functionality of the valve. Contact between R00 and the hot probe also has no immediate effect. Touching the hot probe to G00 induces an EI by causing the green lamp to light. If SC1 is energized by the 120 VAC source, no immediate effect is evident; however, if the operator were to close the valve, the valve motor will remain energized until it stalled or a protective device operates (e.g., the overloads) or the operator opens the key switch (KS) in the permissive control circuit. No spurious operation of the valve in the closed direction occurs if the hot probe comes into contact with SC0, since the Device 42 contactors on the power leads to the valve motor remain open. However, the possibility of such a spurious operation will be documented along with the caveat that it needs the concurrent actuation of the Device 42 in the companion permissive circuit to be realized. Similarly, if S00 is energized, the valve motor does not operate unless the permissive circuit coil (42-) is also actuated. Grounding SC0 or SC1 makes the valve inoperable, and ground contact on R00 immediately causes the fuse to blow and disables power to the primary circuit.

An energized hot probe making contact with X00 or X01 in Cable B has no effect. The response of the other conductors (S01, R00, G00, and SC1) is the same as described for Cable A. The grounding probe causes an immediate LOC (by blowing the fuse) if it contacts X00, X01, or R00. Contacting SC1 with the ground probe makes the valve inoperable.

Cable C causes the fuse to blow if X02 is grounded; the circuit becomes inoperable (by a blown fuse) if grounds are in contact with L00 or W00 when the operator manipulates the KS in this circuit. A hot probe contact with L00 causes the Device 42 coil to actuate; however, this in and of itself will not cause the valve to spuriously open.

Table I-6 shows the results of the hot probe analyses for this particular MOV control circuit. Observe that concurrent hot shorts are considered for this analysis.

Table I-6
MOV with Independent Control Circuits Failure List

Cable	120 VAC Hot Probe	Grounded (Hot) Probe
A	LOC, EI, SO - Close[1]	LOC
B	EI	LOC
C	LOC, EO, SO[2]	LOC

[1] Requires the concurrent actuation of the permissive circuit coil (Device 42) in order to occur.
[2] Spurious operation of the Device 42 contactor coil only, not a spurious operation of the valve.

Appendix J

Appendix for Chapter 10, Technical Basis for Circuit Failure Mode Likelihood Equations

J

APPENDIX FOR CHAPTER 10, TECHNICAL BASIS FOR CIRCUIT FAILURE MODE LIKELIHOOD EQUATIONS

J.1 Computational Probability Estimates

This method involves application of the Circuit Failure Mode Probability Estimation Formulas. The likelihood of occurrence for a specific failure mode ($\mathbf{P}_{FM}$) is estimated by using the formula

$$\mathbf{P}_{FM} = CCF \times \mathbf{P}_{CC,}$$

where

$\mathbf{P}_{FM}$ = the probability that the specific failure mode of interest will occur in a specific circuit given a fire of sufficient intensity to cause cable damage,

$\mathbf{P}_{CC}$ = the probability that a conductor-to-conductor short will occur prior to a short-to-ground or short to a grounded conductor, and

CCF = a factor applied to $\mathbf{P}_{CC}$ that accounts for the relative number of source conductors and target conductors. Target conductors are those conductors of a circuit that, if energized by an electrical source of proper magnitude and voltage, will result in spurious actuation of the circuit, component, or device of concern. Source conductors represent energized conductors that are a potential source of electrical energy.

J.1.1 Estimating P_{cc}

$\mathbf{P}_{CC}$ is a probability factor that accounts for the likelihood of conductor-to-conductor faults occurring before a conductor-to-ground fault. A conductor-to-ground fault could be a short directly to a grounded surface (e.g., conduit, tray, steel member, etc.), or a short to an intentionally grounded conductor (i.e., the neutral or common conductor of a circuit). The predicted outcome is the same in either case. For an energized conductor, fault current will flow, causing a circuit overcurrent protective device (circuit breaker or fuse) to actuate. For a nonenergized conductor, the ground fault places the grounded conductor in a benign state, since any subsequent fault to an energized conductor will behave as a short-to-ground, as described above[1].

[1] This argument is not strictly true for ungrounded systems because earth ground does not provide a free return path for fault current to the reference ground. A dead short (a short-to-ground) only happens when an energized conductor of the ungrounded system touches a reference ground conductor for the system.

$\mathbf{P}_{CC}$ is calculated as follows:

For cables in trays: $\mathbf{P}_{CC} = (TC - GC) / [(TC - GC) + (2 \times GC) + 1]$.

For cables in conduit[2]: $\mathbf{P}_{CC} = (TC - GC) / [(TC - GC) + (2 \times GC) + 3]$,

where

TC = the total number of conductors in the cable of interest (including spares), and

GC = the number of grounded (or common) conductors in the cable of interest.

The bases for the $\mathbf{P}_{CC}$ formulas are as follows.

1. The probability factor is based on a ratio of grounded and ungrounded conductors. Intuitively, the likelihood of a conductor-to-conductor fault increases as the number of grounded conductors decreases. Conversely, the likelihood of a short-to-ground increases as the proportion of grounded conductors in a cable increases. In electrical terms, the effective ground plane is increased as the proportion of grounded conductors increases.

2. The formulas are based on the number of conductors in an individual cable. In other words, the formulas do not consider intercable shorts. The rationale for considering only intracable faults in this factor is as follows.
   - The NEI/EPRI and SNL test data [10.1, 10.4] clearly indicate that, for multiconductor cables, intracable faults occur before intercable faults. This is not to say that intercable faults (i.e., cable-to-cable faults) will not occur, only that they will occur after intracable faults.
   - The test data also indicates that intercable faults are at least an order of magnitude less likely than intracable faults. Thus, they have a secondary or tertiary effect at best.
   - Since $\mathbf{P}_{CC}$ is a ratio of conductors, it is reasonable to assume that external cables surrounding the cable of interest will have conductor ratios similar to the cable of interest. Hence, even if these cables were specifically accounted for, it is unlikely that the overall ratio would be significantly altered.
   - In reality, it is not possible to characterize which cables are next to each other throughout a raceway.

3. Grounded conductors are given a weighting factor of 2. This factor accounts for the observed bias that exists for grounded conductors. Energized conductors have a stronger affinity to the grounded conductors because they represent the path of least resistance for the electrical energy as it strives to achieve its most stable state. The factor was chosen based on judgment and appears to agree with the available data.

   Note: The analyst should determine the number of grounded/common conductors based on the circuit configuration (contact positions, etc.) that represent the normal operating state of the component. If this information is unavailable or indeterminate, the worst-case conditions should be assumed.

[2] Armored and shielded cable should use the equation for conduit. The armor certainly increases the effective ground plane; however, the effect does not appear to be as significant as one might presume. The mylar banding beneath the armor wrap appears to act as an additional barrier against internal conductors touching the shield.

4. Cable trays and conduits represent a ground return path for circuits in which the reference ground is tied to earth ground. The formulas treat these short-circuit paths as simply additional grounded conductors. The NEI/EPRI data shows that the external ground plane becomes an increasingly insignificant ground path as the number of conductors in a multiconductor cable increases. A conservative factor of 1 is used for cable tray. The NEI/EPRI and SNL test data showed a substantially stronger influence of the ground plane for cable in conduit. Thus, a factor of 3 has been selected for cables in conduit. For ungrounded systems (e.g., typical Class 1E nuclear 125 VDC safety system), these factors should be omitted from the formulas since the ground plane does not provide a current return path:

   $\mathbf{P}_{cc} = (TC - GC) / [(TC - GC) + (2 \times GC)]$,

where GC represents the number of return – usually of negative polarity – conductors in an ungrounded circuit.

- The formulas are not dependent on the insulating material. The test data reveals distinctive differences in the behavior of the cables based on insulation type; however, none of the observable differences influence this factor.
- Note that the formulas work for a single conductor, as well multiconductor cable. For example, $\mathbf{P}_{cc}$ for a seven-conductor cable routed in tray with 1 grounded conductor would be:

  $\mathbf{P}_{cc} = (7 - 1) / [(7 - 1) + (2 \text{ x } 1) + 1]$

  $\mathbf{P}_{cc} = 6 / 9$

  $\mathbf{P}_{cc} = 0.667 = 66.7\%$.

Table J-1 gives $\mathbf{P}_{cc}$ for several different cable configurations and internal ground conductors. This table is intended to give a general "feel" for the values; it is not by any means all-inclusive. As expected, the calculated probability of the first failure being a conductor-to-conductor fault increases with the number of conductors in the cable and decreases as the number of grounded conductors increases.

Table J-1
P_{cc} Probability Factors

Cable Parameters		P_{cc}	
Total Conductors (TC)	Grounded Conductors (GC)	Tray	Conduit or Armored Cable
1	0	50%	25%
2	1	25%	17%
3	1	40%	29%
5	1	57%	44%
	2	38%	30%
7	1	67%	55%
	2	50%	42%
8	1	70%	58%
	2	55%	46%
	3	42%	38%
9	1	73%	62%
	2	58%	50%
	3	46%	40%
15	2	72%	65%
	3	63%	57%
	5	48%	44%
21	3	72%	67%
	5	59%	55%
	7	48%	45%

J.1.2 Calculating CCF

Not all conductor-to-conductor faults result in a spurious operation. A conductor-to-conductor fault might cause an indicating light to falsely illuminate; the fault might be to a spare conductor, and thus cause no effect; or it might cause the circuit to fail in the desired state. Only a certain combination of conductors have the ability to initiate a particular circuit failure mode (e.g., spurious actuation). The CCF adjusts $\mathbf{P}_{cc}$ to account for the combinations of conductors with the potential to initiate a specific failure mode.

The conductors of interest for this factor are the source conductors and target conductors. Source conductors are those expected to be energized at the onset of the event. They possess the electrical energy with the potential to cause a spurious actuation should one of these conductors make electrical contact with a target conductor. (Note: For certain failure modes of interest, the source necessary to cause it might be a grounded conductor.) A target conductor is only the conductor(s) of the circuit that, if contacted by a source conductor, will transmit the electrical energy to the device or component of concern, causing the component or device to fail (resulting in an undesired position or state).

CCF is calculated as follows:

For nonarmored cables: $CCF = \{TGC \times [SC + (0.5 / TC)]\} / TC$.

For armored cables: $CCF = (TGC \times SC) / TC$.

(CCF should be ≤ 1.0. If the calculated value of CCF is greater than 1, set CCF = 1.)

Note: In real applications, it is highly unlikely that the calculated value of CCF will ever exceed 1. For this to occur, virtually all conductors in the cable would need to be a source conductor or target conductor.

In the above equations,

SC = the total number of source conductors in the cable under evaluation,

TGC = the total number of target conductors in the cable[3], and

TC = the total number of conductors in the cable, as before.

The bases for the CCF formula are as follows:

1. The formulas offer a simplistic means of accounting for differences in the proportion of conductors within a cable that pose a concern, either because they are a source conductor or a target conductor.
2. The term (0.5/TC) in the formula for nonarmored cable accounts for external source cables that could initiate a spurious actuation due to intercable shorting. Although the NEI/EPRI test data shows that intercable shorts do occur, their statistical significance for a spurious actuation appears to decease rapidly as the number of conductors in a cable increases. Thus, this term has been defined so that it has a fairly significant impact for 1-conductor cable, and then deceases in significance as the total number of conductors increases in the cable under evaluation. For armored or shielded cables, it is not considered credible that external source cables could reach a target cable without first grounding to the armor.

[3] Note that, for this application, target conductors are defined as only those cable conductors capable of forcing the component or circuit into the undesired state or condition of interest. For example, the target conductors associated with causing a spurious operation of the component will likely differ from target conductors associated with causing a LOC condition.

3. The analyst should determine the number of target and source conductors based on the circuit configuration (contact positions, etc.) that represent the normal operating state of the component. If this information is unavailable or indeterminate, the worst-case conditions should be assumed.

4. Several different formulas were tested for correlation with the test data. The formulas presented above appear to work well in the overall $\mathbf{P}_{FM}$ equation to predict the number of spurious actuations documented in the NEI/EPRI test data. As an example, the CCF for a seven-conductor, nonarmored cable with two source conductors and two target conductors would be:

   $CCF = \{2 \times [2 + (0.5 / 7)]\} / 7$

   $CCF = 0.59 = 59\%$.

Table J-2 gives CCF for several different cable configurations. As before, the table is intended to give a general feel for the values and is not all-inclusive. Experience indicates that the number of target conductors in a single cable is most always one. The number of source conductors varies, but it, too, is generally a low fraction of the overall number of conductors in the cable.

Table J-2
CCF Adjustment Factors

Cable Parameters			Cable Type	
Total Conductors (TC)	**Source Conductors (SC)**	**Target Conductors (TGC)**	**Nonarmored**	**Armored**
1	0	1	0.50	0.00
2	1	1	0.63	0.50
3	1	1	0.39	0.33
5	1	1	0.22	0.20
	2	1	0.42	0.40
7	1	1	0.15	0.14
	2	1	0.30	0.29
	2	2	0.59	0.57
9	1	1	0.12	0.11
	2	1	0.23	0.22
	3	1	0.34	0.33
	2	2	0.46	0.44

J.1.3 Calculating PFM

Recall the formula for calculating $\mathbf{P}_{FM}$ is:

$$\mathbf{P}_{FM} = CCF \times \mathbf{P}_{CC,}$$

where CCF and $\mathbf{P}_{CC}$ are determined using the formulas discussed above.

The obvious question at this point is "How well does the formula predict the test data?"

For the seven-conductor cable, there were 31 out of 80 possible spurious actuations for those tests in which cable damage occurred [10.1]. This yields an experimental probability of spurious operation (SO) of 38.8%, given cable damage. Using the equations derived above,

$$\mathbf{P}_{SO} = CCF \times \mathbf{P}_{CC} = 0.59 \times 0.67 = 39.5\ \%.$$

The predicted value of $\mathbf{P}_{SO}$ appears to match well with the experimental results.

Note that $\boldsymbol{P}_{SO}$ represents the probability of a specific failure mode–a spurious operation in this case–while $\boldsymbol{P}_{FM}$ is intended to represent a generic failure mode probability. Other specific failure mode probabilities of interest might include loss of power ($\boldsymbol{P}_{LOP}$), LOC ($\boldsymbol{P}_{LOC}$), loss of indication ($\boldsymbol{P}_{LOI}$), and EI ($\boldsymbol{P}_{EI}$).

For the single-conductor cables, there were 11 out of 44 possible spurious actuations for those tests in which cable damage occurred. This yields an experimental probability of spurious action of 25%, given cable damage. Using the equations derived above,

$$\mathbf{P}_{SO} = CCF \times \mathbf{P}_{CC} = 0.5 \text{ x } 0.5 = 25\%.$$

The predicted value of $\mathbf{P}_{SO}$ again matches well with the experimental results.

Now for a real-world case. The seven-conductor test circuit is a good representation of an MOV circuit. However, in practice, spurious actuation of the MOV in only one direction is of concern. Thus, only one target cable would exist. On that basis, the probability of an SO of an MOV given fire damage to the MOV's control cable is:

Cable in tray: $\mathbf{P}_{SO} = CCF \times \mathbf{P}_{CC} = 0.30 \times 0.67 = 20\%$;

Cable in conduit: $\mathbf{P}_{SO} = CCF \times \mathbf{P}_{CC} = 0.30 \times 0.55 = 16.5\%$.

In developing the equations, the authors were mindful to ensure they agree well with the experimental values. Nevertheless, the equations appear to work within reason. The weakness with these equations, as well as any other approach used to predict $\mathbf{P}_{FM}$, is that the test data covers only a limited number of cases and configurations. Thus, assumptions are inevitably made in extrapolating the results to those cases not tested.

It is important to note that the probability of spurious actuation calculated here does not consider any factors associated with timing or the likelihood of a fire causing cable damage.

Also note that, unlike the case for Task 9—where once the circuit cable has been analyzed and the possible failure modes and effects identified, the results apply to all fire scenarios affecting the cable—in this analysis, certain characteristics of the cable may change during its route through the plant (e.g., going from conduit to cable tray) which will affect the likelihood estimates of a particular failure mode occurring, thus requiring a review and evaluation of the cable conditions for each fire scenario affecting the cable of interest. In other words, the results might well differ from one fire scenario or compartment to the next.

Appendix K

Appendix for Chapter 10, Examples of Component Circuit Failure Mode Likelihood Analyses

K

APPENDIX FOR CHAPTER 10, EXAMPLES OF COMPONENT CIRCUIT FAILURE MODE LIKELIHOOD ANALYSES

This appendix demonstrates the procedure for estimating the likelihood of specific cable failure modes for a number of circuits, each with particular and (in some cases) unique features or characteristics. The examples presented here include the following types of circuits which were also presented as examples in Appendix I.

- A typical ungrounded DC SOV control circuit
- A typical MOV control circuit
- A control circuit employing double-pole isolation switches
- An ungrounded AC MOV control circuit with contacts on the downstream leg and normal contract arrangement
- An ungrounded AC MOV control circuit with normal contract arrangement
- An MOV with redundant main contactors and fully independent control circuits.

K.1 Typical SOV Control Circuit

Figure K-1 shows a block diagram for the component SOV with the specific cables of interest highlighted. The cable of interest for this analysis is identified as Cable B. Figure K-2 shows an overall schematic diagram of the control circuit for the SOV in its normal operating state (i.e., deenergized, open, with the red status indication lit). The conductors contained within Cable B are also noted on the schematic—P00, N00, R00, G00, SV0, and SV1.

As a result of the detailed circuit analysis during Task 9 activities, it was determined that there were three possible component failure responses: Loss of control over the valve, erroneous status indications, and spurious closure of the valve. These equipment responses correspond to the component failure codes LOC, EI, and SO, respectively.

The analyst should first note the characteristics of the cable and circuit: A seven-conductor thermoset cable associated with an ungrounded DC circuit without a CPT and with one common conductor (N00) and three energized conductors (P00, R00, and SV1). For the purpose of this example, it is assumed that the cable is routed in an open cable tray.

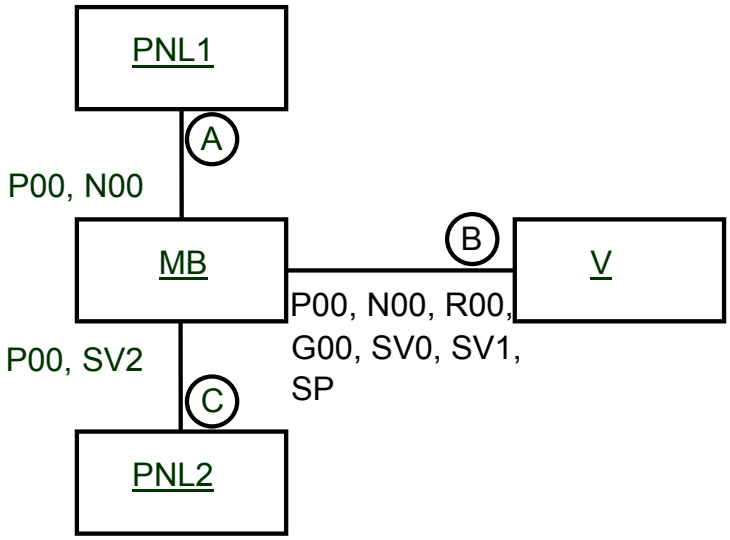

Figure K-1
Highlighted Block Diagram for Typical SOV Circuit Example

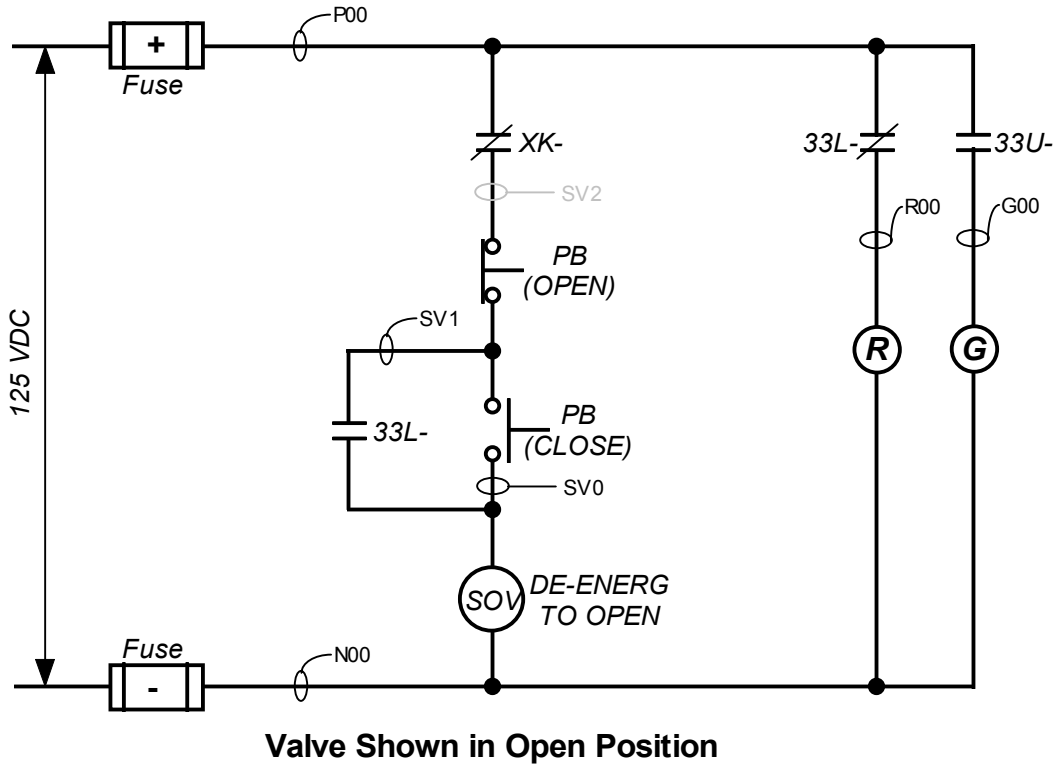

Figure K-2
Electrical Schematic for Typical SOV Circuit Example

By employing Approach #1 of this procedure, the analyst uses Table 10-1 to estimate the following failure mode probabilities:

LOC – $\mathbf{P}_{LOC} = 0.66$

Table K-1
SOV Cable B Failure Response Probabilities

Failure Code	Estimated Probability (Calculated)	Estimated Probability (From Table 10-1)
LOC	0.48	0.66
EI	0.33	0.66
SO (Closed)	0.33	0.66

EI – $\mathbf{P}_{EI} = 0.66$

SO closed – $\mathbf{P}_{SO} = 0.66$

Each of these values is the sum of an intracable shorting event (**P** = 0.60) and an intercable shorting event (**P** = 0.06). The high confidence range for these estimates are all 0.2 – 1.0.

If the analyst determines the need to refine the estimated failure mode probabilities, Approach #2 should be used. The first step is for the analyst to calculate the probability of conductor-to-conductor shorting prior to a short-to-common short occurring ($\mathbf{P}_{CC}$), since this value will be used to estimate the probability for each failure mode of concern.

$\mathbf{P}_{CC} = (TC - GC) / [(TC - GC) + (2 * GC)]$

$\mathbf{P}_{CC} = (7 - 1) / [(7 - 1) + (2 * 1)]$

$\mathbf{P}_{CC} = 6 / [6 + 2]$

$\mathbf{P}_{CC} = \underline{0.75}$

In estimating the LOC probability, a short that causes the fuse(s) to blow is the principal means of occurrence. Thus, the cable configuration factor for LOC (CCF_{LOC}) is based on the presence of three target conductors (P00, SV1, and R00) and one source conductor (N00).

$CCF_{LOC1} = \{TGC * [SC + (0.5 / TC)]\} / TC$

$CCF_{LOC1} = \{3 * [1 + (0.5 / 7)]\} / 7$

$CCF_{LOC1} = 3.214 / 7$

$CCF_{LOC1} = 0.46$

In this case, the estimated probability for a LOC circuit response is

$\mathbf{P}_{LOC1} = \mathbf{P}_{CC} * CCF_{LOC1}$

$\mathbf{P}_{LOC1} = 0.75 * 0.46$

$\mathbf{P}_{LOC1} = 0.35.$

Note that there are two other mechanisms by which a delayed loss of valve control can occur: (1) a short between N00 and SV0 such that when the Close pushbutton is actuated, the fuse(s) will blow, or (2) a short between N00 and G00 wherein once the valve is closed, the change in position limit switches also causes the fuse(s) to blow. In both cases, there is one target conductor and one source conductor assigned in the CCF calculation.

$$CCF_{LOC2} = CCF_{LOC3} = \{TGC * [SC + (0.5 / TC)]\} / TC$$

$$CCF_{LOC2} = CCF_{LOC3} = \{1 * [1 + (0.5 / 7)]\} / 7$$

$$CCF_{LOC2} = CCF_{LOC3} = 1.071 / 7$$

$$CCF_{LOC2} = CCF_{LOC3} = 0.15$$

In each of these cases, the estimated probability for a LOC circuit response is

$$\mathbf{P}_{LOC2} = \mathbf{P}_{LOC3} = \mathbf{P}_{CC} * CCF_{LOC2}$$

$$\mathbf{P}_{LOC2} = \mathbf{P}_{LOC3} = 0.75 * 0.15$$

$$\mathbf{P}_{LOC2} = \mathbf{P}_{LOC3} = 0.11.$$

The overall probability of fire damage to Cable B causing a LOC response is

$$\mathbf{P}_{LOC} = \mathbf{P}_{LOC1} + \mathbf{P}_{LOC2} + \mathbf{P}_{LOC3} - [(\mathbf{P}_{LOC1} * \mathbf{P}_{LOC2}) + (\mathbf{P}_{LOC1} * \mathbf{P}_{LOC3}) + (\mathbf{P}_{LOC2} * \mathbf{P}_{LOC3})]$$

$$\mathbf{P}_{LOC} = 0.35 + 0.11 + 0.11 - [(0.35 * 0.11) + (0.35 * 0.11) + (0.11 * 0.11)]$$

$$\mathbf{P}_{LOC} = 0.57 - [0.04 + 0.04 + 0.01]$$

$$\mathbf{P}_{LOC} = \underline{0.48.}$$

In estimating the probability of an immediate EI circuit response, the analyst sees that a short which energizes G00 is the only means of occurrence. Thus, the cable configuration factor for loss of control (CCF_{EI}) is based on the presence of one target conductor (G00) and three source conductors (P00, R00 and SV1).

$$CCF_{EI} = \{TGC * [SC + (0.5 / TC)]\} / TC$$

$$CCF_{EI} = \{1 * [3 + (0.5 / 7)]\} / 7$$

$$CCF_{EI} = 3.071 / 7$$

$$CCF_{EI} = 0.44$$

In this case, the estimated probability for an EI circuit response is

$\mathbf{P}_{EI} = \mathbf{P}_{CC} * CCF_{EI}$

$\mathbf{P}_{EI} = 0.75 * 0.44$

$\mathbf{P}_{EI} = \underline{0.33.}$

Finally, for estimating the probability of an SO of the valve to the closed position, a short which energizes SV0 is the only means of occurrence. Thus, the cable configuration factor for LOC (CCF_{SO}) is based on the presence of one target conductor (SV0) and three source conductors (P00, R00 and SV1).

$CCF_{SO} = \{TGC * [SC + (0.5 / TC)]\} / TC$

$CCF_{SO} = \{1 * [3 + (0.5 / 7)]\} / 7$

$CCF_{SO} = 3.071 / 7$

$CCF_{SO} = 0.44$

In this case, the estimated probability for a spurious valve closure is

$\mathbf{P}_{SO} = \mathbf{P}_{CC} * CCF_{SO}$

$\mathbf{P}_{SO} = 0.75 * 0.44$

$\mathbf{P}_{SO} = \underline{0.33.}$

K.2 Typical MOV Control Circuit

For this example, the MOV control circuit involves only one cable of interest; Cable A (see Figure K-3). Figure K-4 shows the electrical schematic for the MOV control circuit with the conductors located within Cable A identified. Note that the control circuit is a grounded 120 VAC circuit employing a control power transformer and, for the purpose of this example, the cable is assumed to be a nine-conductor thermoset routed in a cable tray.

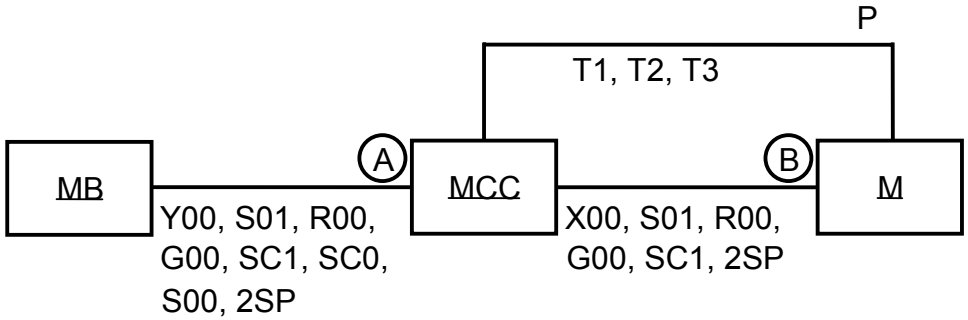

Figure K-3
Highlighted Block Diagram for Typical MOV Circuit Example

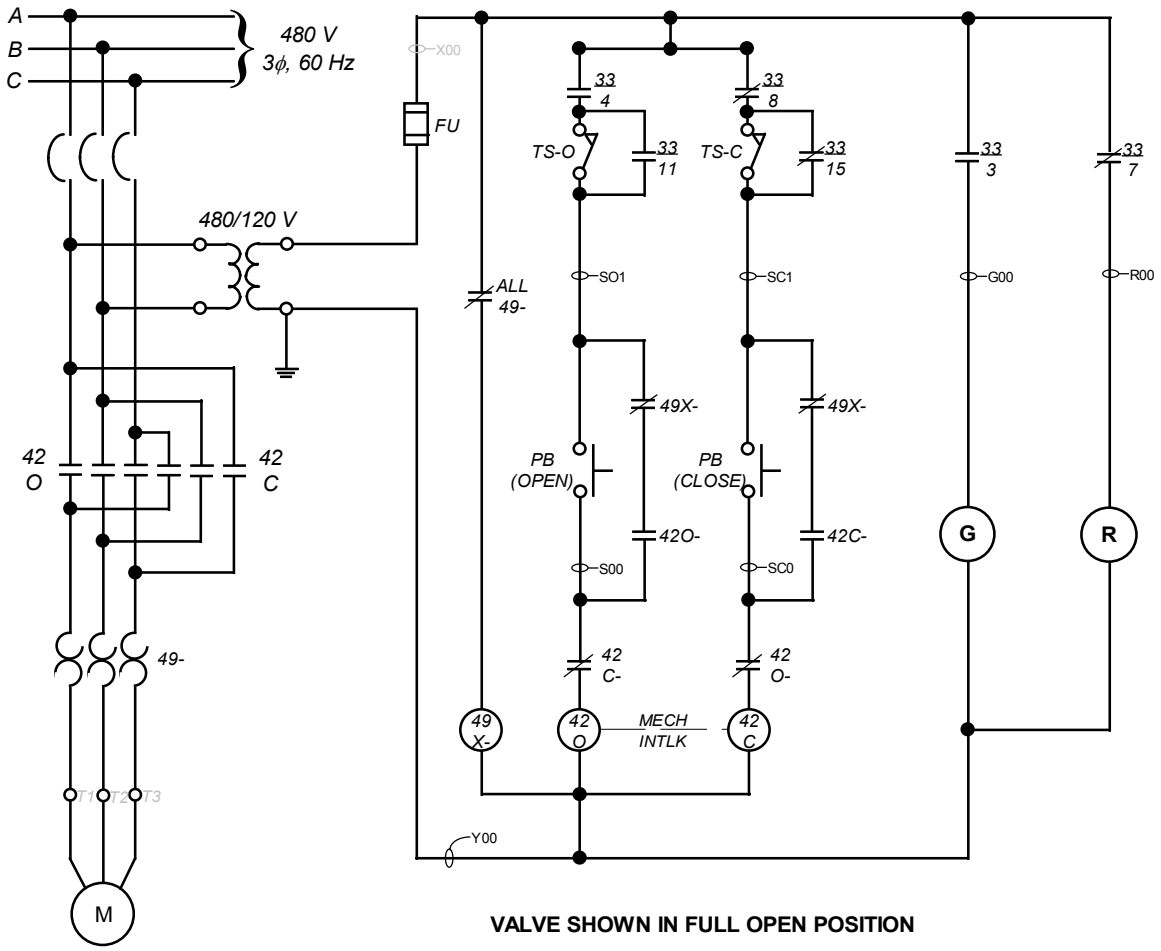

Figure K-4
Electrical Schematic for Typical MOV Circuit Example

From the results of the detailed circuit analysis (Task 9), it was determined that fire damage to Cable A could result in three failure modes of the valve: LOC, EI, and SO to the closed position.

In the same manner as the analysis of the SOV circuit, the analyst will first determine the probabilities for these failure modes from Table 10-1. Again, the cause for each failure mode can result from either an intracable short or an intercable short, thus the best estimate probabilities obtained from Table 10-1 are 0.33 (= 0.30 + 0.03).

Table K-2
MOV Cable A Failure Response Probabilities

Failure Code	Estimated Probability (Calculated)	Estimated Probability (From Table 10-1)
LOC	0.31	0.33
EI	0.17	0.33
SO (Closed)	0.17	0.33

By way of comparison, using the probability estimating formulas is also demonstrated for this example. The conductor-to-conductor shorting probability ($\mathbf{P}_{CC}$) is determined to be

$\mathbf{P}_{CC}$ = (TC – GC) / [(TC – GC) + (2 * GC) + 1]

$\mathbf{P}_{CC}$ = (9 – 1) / [(9 – 1) + (2 * 1) + 1]

$\mathbf{P}_{CC}$ = 8 / [8 + 2 + 1]

$\mathbf{P}_{CC}$ = 0.73.

where conductor Y00 is the only grounded conductor contained within Cable A.

In estimating the LOC probability, a short that causes the fuse(s) to blow is the principal means of occurrence. Thus, the cable configuration factor for LOC (CCF_{LOC1}) is based on the presence of two target conductors (SC1 and R00) and one source conductor (Y00).

CCF_{LOC1} = {TGC * [SC + (0.5 / TC)]} / TC

CCF_{LOC1} = {2 * [1 + (0.5 / 9)]} / 9

CCF_{LOC1} = 2.111 / 9

CCF_{LOC1} = 0.23

In this case, the estimated probability for a LOC circuit response is

$\mathbf{P}_{LOC1} = \mathbf{P}_{CC} * CCF_{LOC1}$

$\mathbf{P}_{LOC1}$ = 0.73 * 0.23

$\mathbf{P}_{LOC1}$ = 0.17.

Note that there is another mechanism by which a delayed loss of valve control can occur: a short between S00 and an energized source, such that the Close relay is effectively locked out. In both cases, there is one target conductor (S00) and two source conductors to be assigned in the CCF calculation.

CCF_{LOC2} = {TGC * [SC + (0.5 / TC)]} / TC

CCF_{LOC2} = {1 * [2 + (0.5 / 9)]} / 9

CCF_{LOC2} = 2.056 / 9

CCF_{LOC2} = 0.23

In each of these cases, the estimated probability for a LOC circuit response is

$\mathbf{P}_{LOC2} = \mathbf{P}_{CC} * CCF_{LOC2}$

$\mathbf{P}_{LOC2}$ = 0.73 * 0.23

$\mathbf{P}_{LOC2}$ = 0.17.

The overall probability of fire damage to Cable B causing a LOC response is

$\mathbf{P}_{LOC} = \mathbf{P}_{LOC1} + \mathbf{P}_{LOC2} - (\mathbf{P}_{LOC1} * \mathbf{P}_{LOC2})$

$\mathbf{P}_{LOC} = 0.17 + 0.17 - (0.17 * 0.17)$

$\mathbf{P}_{LOC} = 0.34 - 0.03$

$\mathbf{P}_{LOC} = \underline{0.31.}$

In estimating the probability of an immediate EI circuit response a short that energizes G00 is the only means of occurrence. Thus, the cable configuration factor for LOC (CCF_{EI}) is based on the presence of one target conductor (G00) and two source conductors (R00 and SC1).

$CCF_{EI} = \{TGC * [SC + (0.5 / TC)]\} / TC$

$CCF_{EI} = \{1 * [2 + (0.5 / 9)]\} / 9$

$CCF_{EI} = 2.056 / 9$

$CCF_{EI} = 0.23$

In this case, the estimated probability for an EI circuit response is

$\mathbf{P}_{EI} = \mathbf{P}_{CC} * CCF_{EI}$

$\mathbf{P}_{EI} = 0.73 * 0.23$

$\mathbf{P}_{EI} = \underline{0.17.}$

Finally, for estimating the probability of an SO of the valve to the closed position, the analyst sees that a short that energizes SC0 is the only means of occurrence. Thus, the cable configuration factor for LOC (CCF_{SO}) is based on the presence of one target conductor (SC0) and two source conductors (R00 and SC1).

$CCF_{SO} = \{TGC * [SC + (0.5 / TC)]\} / TC$

$CCF_{SO} = \{1 * [2 + (0.5 / 9)]\} / 9$

$CCF_{SO} = 2.056 / 9$

$CCF_{SO} = 0.23$

In this case, the estimated probability for a spurious valve closure is

$\mathbf{P}_{SO} = \mathbf{P}_{CC} * CCF_{SO}$

$\mathbf{P}_{SO} = 0.73 * 0.23$

$\mathbf{P}_{SO} = \underline{0.17.}$

K.3 Control Circuit with Double-Pole Isolation Switches

The doubly isolated control circuit design is shown in Figures K-5 and K-6. Here, the motor is isolated from the power conductors (ungrounded ±48 VDC) by a succession of isolation switches. In this case, the motor is used to position a speed control valve on a steam turbine. In normal operation, the operator increases (raises) the speed or lowers it by manipulating a momentary switch. The motor can be operated remotely (e.g., the control room) or locally at the turbine. Remote or local operation is determined by the position of a manual control transfer switch (Device 43) and the contact positions of a control relay. In either case, the momentary control switch closes two sets of contacts for a raise or lower command.

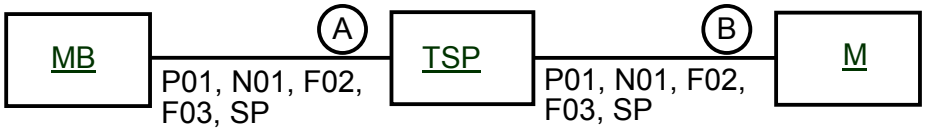

Figure K-5
Highlighted Block Diagram for Double-Pole Isolation Circuit Example

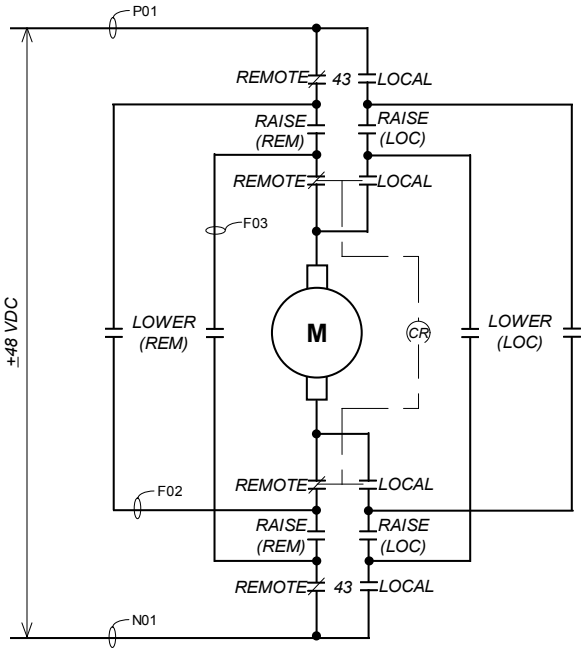

Figure K-6
Electrical Schematic for Double-Pole-Isolation Circuit Example

The block diagram shows two cables, A and B, associated with the motor. Both of these cables allow for remote operation only. Both of these cables will be assessed for the possible failure modes (LOC and SO) identified in Task 9. However, as indicated in the block diagram, these two cables are virtually identical, so only one needs to be evaluated for the probability of likelihood and the results may then be applied to the other. For this example, we will assume that the cable is a five-conductor thermoplastic routed in an open cable tray.

From Table K-3, we see that the probabilities of occurrence for loss of motor control and SO are both equal to the sum of an intracable shorting event and an intercable short; 0.33.

Table K-3
Double-Pole Isolated Motor Failure Response Probabilities (Cables A and B)

Failure Code	Estimated Probability (Calculated)	Estimated Probability (From Table 10-1)
LOC	0.56	0.33
SO[1]	0.06	0.33

[1] SO of the motor requires concurrent dual-polarity hot shorts on F02 *and* F03.

Because of the double-pole isolation features of this circuit, SO of the motor can only result from the application of a dual-polarity hot shorting event. The motor will raise if F03 is biased by the positive source at the same time F02 is made negative, and the motor will spuriously operate in the lower direction if those polarities are reversed. In either case, the second hot short is dependent on the first having occurred. The method for handling this dependency will be demonstrated in the formula calculations for this circuit.

The value of $\mathbf{P}_{CC}$ is calculated to be where N01 is identified as the common conductor

$$\mathbf{P}_{CC} = (TC - GC) / [(TC - GC) + (2 * GC)]$$

$$\mathbf{P}_{CC} = (5 - 1) / [(5 - 1) + (2 * 1)]$$

$$\mathbf{P}_{CC} = 4 / 6$$

$$\mathbf{P}_{CC} = \underline{\underline{0.67.}}$$

An immediate LOC condition can occur due to the shorting of P01 to N01 or by the shorting F02 to F03. Delayed LOC failures in one motor direction or the other can be accomplished by other shorting combinations. In this case, it is assumed there are two target conductors and two source conductors. This provides a LOC cable configuration factor of

$$CCF_{LOC} = \{TGC * [SC + (0.5 / TC)]\} / TC$$

$$CCF_{LOC} = \{2 * [2 + (0.5 / 5)]\} / 5$$

$$CCF_{LOC} = 4.2 / 5$$

$$CCF_{LOC} = 0.84.$$

Thus, the overall probability of loss of motor control is

$$\mathbf{P}_{LOC} = \mathbf{P}_{CC} * CCF_{LOC}$$

$$\mathbf{P}_{LOC} = 0.67 * 0.84$$

$$\mathbf{P}_{LOC} = \underline{\underline{0.56.}}$$

To determine the probability for an SO of the motor, two concurrent shorting events need to occur: (1) P01 shorts to F03 and N01 shorts to F02 to cause an SO of the motor in the Raise direction, or (2) a short of P01 to F02 and N01 to F03, to cause the motor to spuriously operate in the Lower direction. In both cases, the probability of the second short occurring depends on the occurrence of the first shorting event. Therefore, two separate CCFs should be calculated as follows:

$CCF_{SO1} = \{TGC * [SC + (0.5 / TC)]\} / TC$

$CCF_{SO1} = \{1 * [1 + (0.5 / 5)]\} / 5$

$CCF_{SO1} = 1.1 / 5$

$CCF_{SO1} = 0.22$

and

$CCF_{SO2} = \{TGC * [SC + (0.5 / TC)]\} / TC$

$CCF_{SO2} = \{1 * [1 + (0.5 / 3)]\} / 3$

$CCF_{SO2} = 1.17 / 3$

$CCF_{SO2} = 0.39.$

Since both shorts need to occur for the SO of the motor, the overall probability is then calculated by

$\mathbf{P}_{SO} = \mathbf{P}_{CC} *(CCF_{SO1} * CCF_{SO2})$

$\mathbf{P}_{SO} = 0.67 *(0.22 * 0.39)$

$\mathbf{P}_{SO} = 0.06.$

K.4 Ungrounded AC MOV Control Circuit with Contacts on the Downstream Leg and Normal Contact Arrangement

The highlighted cable block diagram for this ungrounded control circuit is shown in Figure K-7, and Figure K-8 shows the circuit schematic with the conductors of interest identified. As noted in the figure, the control switches are located on the low side of the operating coils. The circuit configuration is shown with the valve in its fully open position and control available at the main board.

The block diagram shows that control Cables B and C need failure mode probability analysis for this example. In a manner similar to the processes described previously, the analyst determines that both cables are nine-conductor thermosets and further discovers that Cable B is routed in a tray, whereas Cable C is routed in conduit. Additionally, the analyst notes that the results from the detailed circuit analysis of these two cables performed under Task 9 indicate that each cable is capable of causing LOC or SO, closure of the valve if damaged by fire. Furthermore, Cable C is also able to cause an EI response in the control circuit.

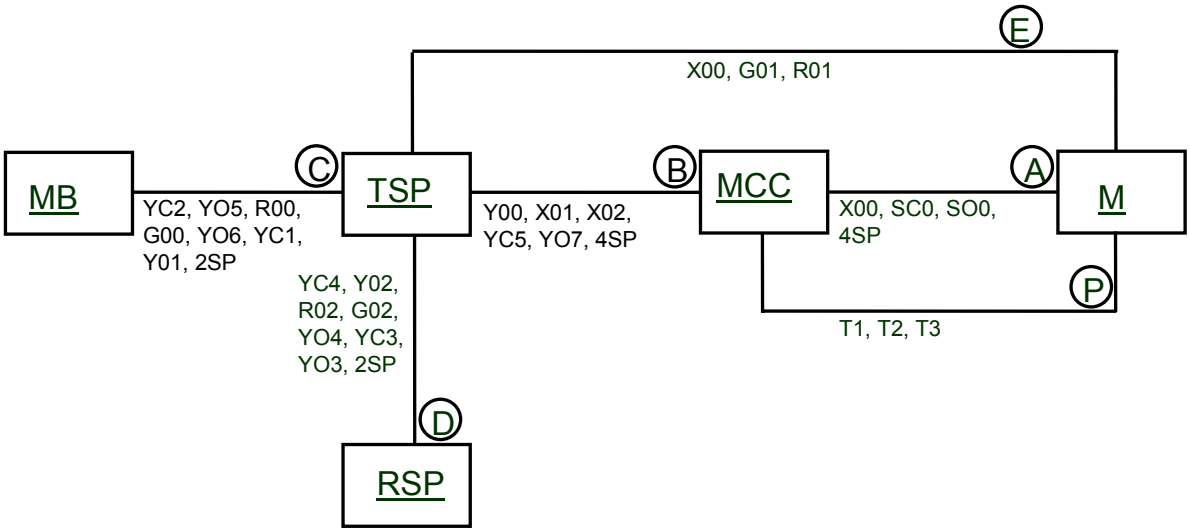

Figure K-7
Highlighted Block Diagram for Ungrounded, Inverted MOV Example

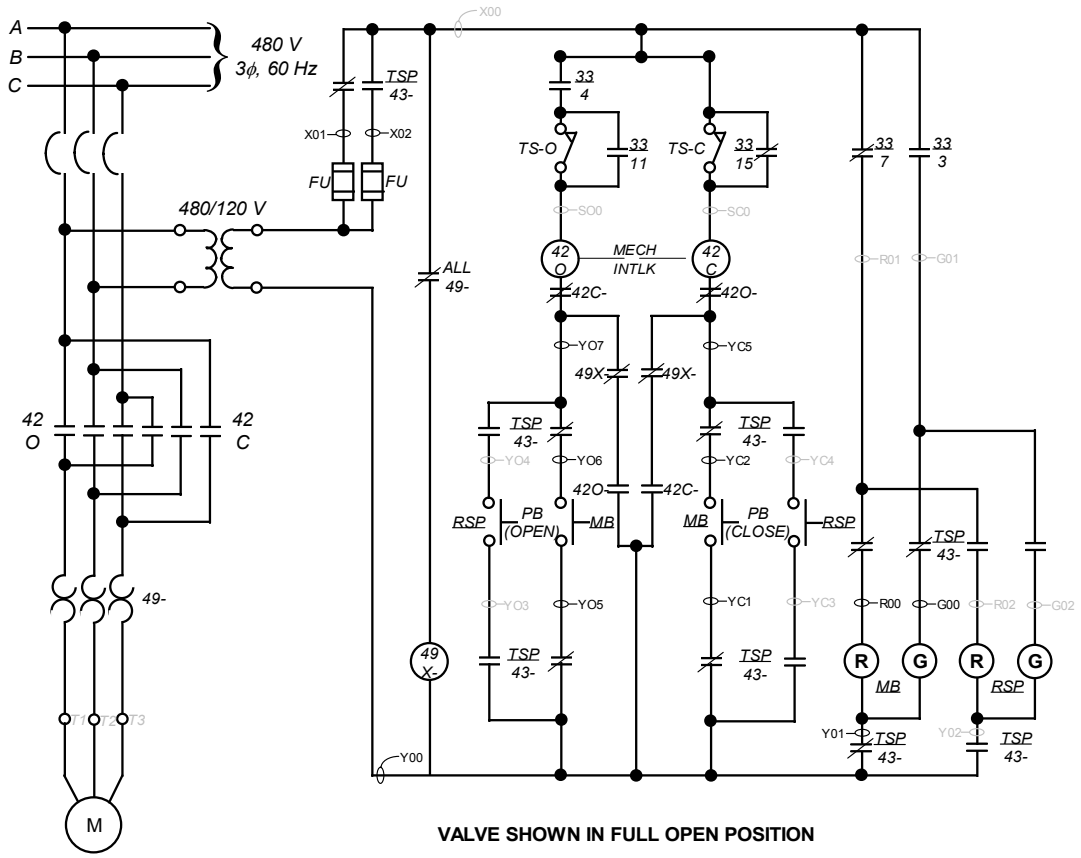

Figure K-8
Electrical Schematic for Ungrounded, Inverted MOV Example

Table 10-1 indicates that all failure probabilities for Cable B will be 0.33, the combined probability estimates for intracable and intercable shorting events. For Cable C, the table provides failure probabilities of 0.08 that represents the simple summation of the best estimate value for intracable shorts of thermoset cables routed in conduit (0.075), plus the mid-range value for the intercable shorting (0.0075) estimate.

The analyst determines that there is one common conductor, Y00, in Cable B and, using the methods described above, calculates the value of $\mathbf{P}_{CC}$ for Cable B to be

$$\mathbf{P}_{CC(B)} = (9 - 1) / [(9 - 1) + (2 * 1)]$$

$$\mathbf{P}_{CC(B)} = 8 / 10$$

$$\mathbf{P}_{CC(B)} = \underline{0.80.}$$

In a similar fashion, the analyst determines the value of $\mathbf{P}_{CC}$ for Cable C, knowing that YO5, YC1, and Y01 are all ground conductors.

$$\mathbf{P}_{CC(C)} = (9 - 3) / [(9 - 3) + (2 * 3)]$$

$$\mathbf{P}_{CC(C)} = 6 / 12$$

$$\mathbf{P}_{CC(C)} = \underline{0.50.}$$

The analyst decides to determine the relevant failure probability estimates for Cable B first. In order to determine the LOC cable configuration factor (CCF_{LOC}) for Cable B, three different short circuit events could result in a LOC: (1) contact between X01, the target, and Y00, the source, will likely result in a blown control power fuse, thus failing power to the circuit as a whole[1]; (2) if either X01 or X02, the sources, make contact with YC5, the fuse(s) are likely to blow if and when the operator attempts to close the valve using the pushbutton; (3) a more subtle form of LOC can occur if YO7 contacts Y00. This results in a delayed form of LOC if these conductors are in contact at the time the operator closes the valve, because once the valve has reached its fully closed position and the limit switch (Device 33) contacts change position, the Open coil will be energized, causing the valve to reopen. Thus, there are two target conductors (X01 and YO7) and one source conductor (Y00). (Note that the inverted nature of this particular circuit design invites the analyst to reverse the normal assignment of target and source.)

Applying the above information to the equation provides the following LOC cable configuration factors:

$$CCF_{LOC1} = \{1 * [1 + (0.5 / 9)]\} / 9$$

$$CCF_{LOC1} = 1.056 / 9$$

$$CCF_{LOC1} = 0.12$$

$$CCF_{LOC2} = \{1 * [2 + (0.5 / 9)]\} / 9$$

$$CCF_{LOC2} = 2.056 / 9$$

[1] Contact between X02 and Y00, and the possible loss of the associated fuse, will not disable control of the valve from the main board. Such a situation will, however, disable control of the valve from the remote control panel.

$CCF_{LOC2} = 0.23$

$CCF_{LOC3} = \{1 * [1 + (0.5 / 9)]\} / 9$

$CCF_{LOC3} = 1.056 / 9$

$CCF_{LOC3} = 0.12.$

The individual probabilities of loss of valve control are then calculated to be

$\mathbf{P}_{LOC1} = 0.80 * 0.12 = 0.10$

$\mathbf{P}_{LOC2} = 0.80 * 0.23 = 0.18$

$\mathbf{P}_{LOC3} = 0.80 * 0.12 = 0.10.$

The overall probability of LOC is then calculated

$\mathbf{P}_{LOC} = \mathbf{P}_{LOC1} + \mathbf{P}_{LOC2} + \mathbf{P}_{LOC3} - [(\mathbf{P}_{LOC1} * \mathbf{P}_{LOC2}) + (\mathbf{P}_{LOC1} * \mathbf{P}_{LOC3}) + (\mathbf{P}_{LOC2} * \mathbf{P}_{LOC3})]$

$\mathbf{P}_{LOC} = 0.10 + 0.18 + 0.10 - [0.02 + 0.01 + 0.02]$

$\mathbf{P}_{LOC} = 0.38 - 0.05 = \underline{0.33.}$

To estimate the probability of SO of the MOV due to failure of Cable B, the valve can be forced to spuriously close only by contact between the source conductor Y00 and the target conductor YC5. Thus,

$CCF_{SO} = \{1 * [1 + (0.5 / 9)]\} / 9$

$CCF_{SO} = 1.056 / 9$

$CCF_{SO} = 0.12.$

The estimated probability for spurious operation is then

$\mathbf{P}_{SO} = 0.80 * 0.12 = \underline{0.10.}$

In like manner, the analyst can estimate the likelihood for LOC, EI, and SO due to Cable C damage.

For LOC, there are four cases to evaluate: (1) immediate LOC with three targets and one source, (2) delayed LOC with one target and one source, (3) delayed LOC with three targets and one source, and (4) delayed LOC with four targets and one source.

$CCF_{LOC1} = \{3 * [1 + (0.5 / 9)]\} / 9$

$CCF_{LOC1} = 3.167 / 9 = 0.35$

$CCF_{LOC2} = \{1 * [1 + (0.5 / 9)]\} / 9$

$CCF_{LOC2} = 1.056 / 9 = 0.12$

$CCF_{LOC3} = \{3 * [1 + (0.5 / 9)]\} / 9$

$CCF_{LOC3} = 3.167 / 9 = 0.35$

$CCF_{LOC4} = \{4 * [1 + (0.5 / 9)]\} / 9$

$CCF_{LOC4} = 4.222 / 9 = 0.47$

The individual probabilities of loss of valve control are then calculated to be

$\mathbf{P}_{LOC1} = 0.50 * 0.35 = 0.18$

$\mathbf{P}_{LOC2} = 0.50 * 0.12 = 0.06$

$\mathbf{P}_{LOC3} = 0.50 * 0.35 = 0.18$

$\mathbf{P}_{LOC4} = 0.50 * 0.47 = 0.24.$

The overall probability of loss of control is then calculated

$\mathbf{P}_{LOC} = \mathbf{P}_{LOC1} + \mathbf{P}_{LOC2} + \mathbf{P}_{LOC3} = \mathbf{P}_{LOC4} - [(\mathbf{P}_{LOC1} * \mathbf{P}_{LOC2}) + (\mathbf{P}_{LOC1} * \mathbf{P}_{LOC3}) + (\mathbf{P}_{LOC1} * \mathbf{P}_{LOC4}) + (\mathbf{P}_{LOC2} * \mathbf{P}_{LOC3}) + (\mathbf{P}_{LOC2} * \mathbf{P}_{LOC4}) + (\mathbf{P}_{LOC3} * \mathbf{P}_{LOC4})]$

$\mathbf{P}_{LOC} = 0.18 + 0.06 + 0.18 + 0.24 - [0.01 + 0.03 + 0.04 + 0.01 + 0.01 + 0.04]$

$\mathbf{P}_{LOC} = 0.66 - 0.14 = \underline{\underline{0.52.}}$

For determining CCF for erroneous indication, there is one target conductor and one source.

$CCF_{EI} = \{1 * [1 + (0.5 / 9)]\} / 9$

$CCF_{EI} = 1.056 / 9 = 0.12.$

Thus,

$\mathbf{P}_{EI} = 0.50 * 0.12 = \underline{\underline{0.06.}}$

Finally, to estimate the probability of SO, there are three target conductors and one source conductor.

$CCF_{SO} = \{3 * [1 + (0.5 / 9)]\} / 9$

$CCF_{SO} = 3.167 / 9 = 0.35$

$\mathbf{P}_{SO} = 0.50 * 0.35 = \underline{\underline{0.18}}$

Table K-4 provides the results for the circuit response probability estimates for Cables B and C.

Table K-4
Ungrounded, Inverted MOV Failure Response Probabilities

Cable	Failure Mode	Estimated Probability (Calculated)	Estimated Probability (From Table 10-1)
B	LOC	0.33	0.33
	SO	0.10	0.33
C	LOC	0.52	0.08
	EI	0.06	0.08
	SO	0.18	0.08

K.5 Ungrounded MOV Control Circuit with Normal Contact Arrangement

This MOV control circuit is unusual in that all five control cables, A through E (see Figure K-8), were capable of causing an SO of the valve. Consequently, the analyst decides to focus the analysis and determine the probability of SO for each cable. Assuming all of the control cables are thermosets and routed in trays, Table 10-1 provides a value of 0.33 as the best estimate for SO occurrence due to fire damage of each cable.

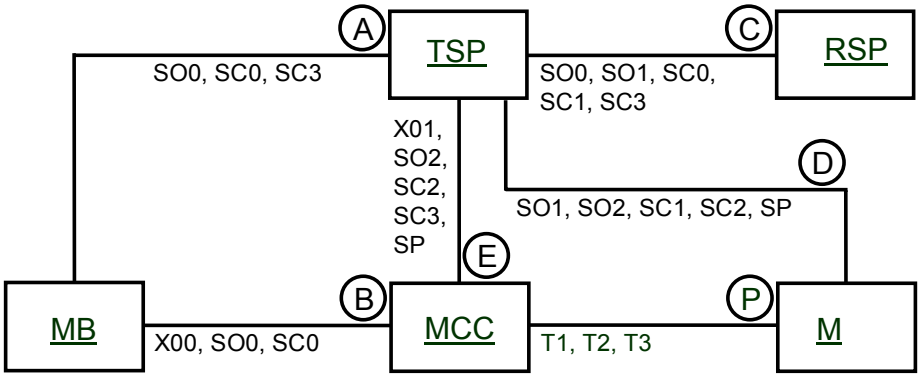

Figure K-9
Highlighted Block Diagram for Ungrounded MOV Circuit Analysis Example

Employing the formula for determining the conductor-to-conductor shorting probability for each cable, the following values are obtained. (Note that none of the conductors in any of the five cables is directly connected to the low side of the control power transformer.)

$$\mathbf{P}_{CC(A)} = (3 - 0) / [(3 - 0) + (2 * 0)] = 3 / 3 = 1.0$$

$$\mathbf{P}_{CC(B)} = (3 - 0) / [(3 - 0) + (2 * 0)] = 3 / 3 = 1.0$$

$$\mathbf{P}_{CC(C)} = (5 - 0) / [(5 - 0) + (2 * 0)] = 5 / 5 = 1.0$$

$$\mathbf{P}_{CC(D)} = (5 - 0) / [(5 - 0) + (2 * 0)] = 5 / 5 = 1.0$$

$$\mathbf{P}_{CC(E)} = (5 - 0) / [(5 - 0) + (2 * 0)] = 5 / 5 = 1.0$$

The analyst then determines the cable configuration factor for each cable by identifying the appropriate targets and sources that would result in an SO of the valve.

For Cable A, conductor S00 would be the target, but none are source conductors.

$$CCF_{SO(A)} = \{1 * [0 + (0.5 / 3)]\} / 3 = 0.17 / 3 = 0.06$$

In Cable B, conductor S00 is the target and X00 would be the source.

$$CCF_{SO(B)} = \{1 * [1 + (0.5 / 3)]\} / 3 = 1.17 / 3 = 0.39$$

Conductors S00 and S01 are the targets in Cable C, but again, there are no source conductors.

$$CCF_{SO(C)} = \{2 * [0 + (0.5 / 5)]\} / 5 = 0.20 / 5 = 0.04$$

S01 and S02 are the Cable D target conductors and there are no sources.

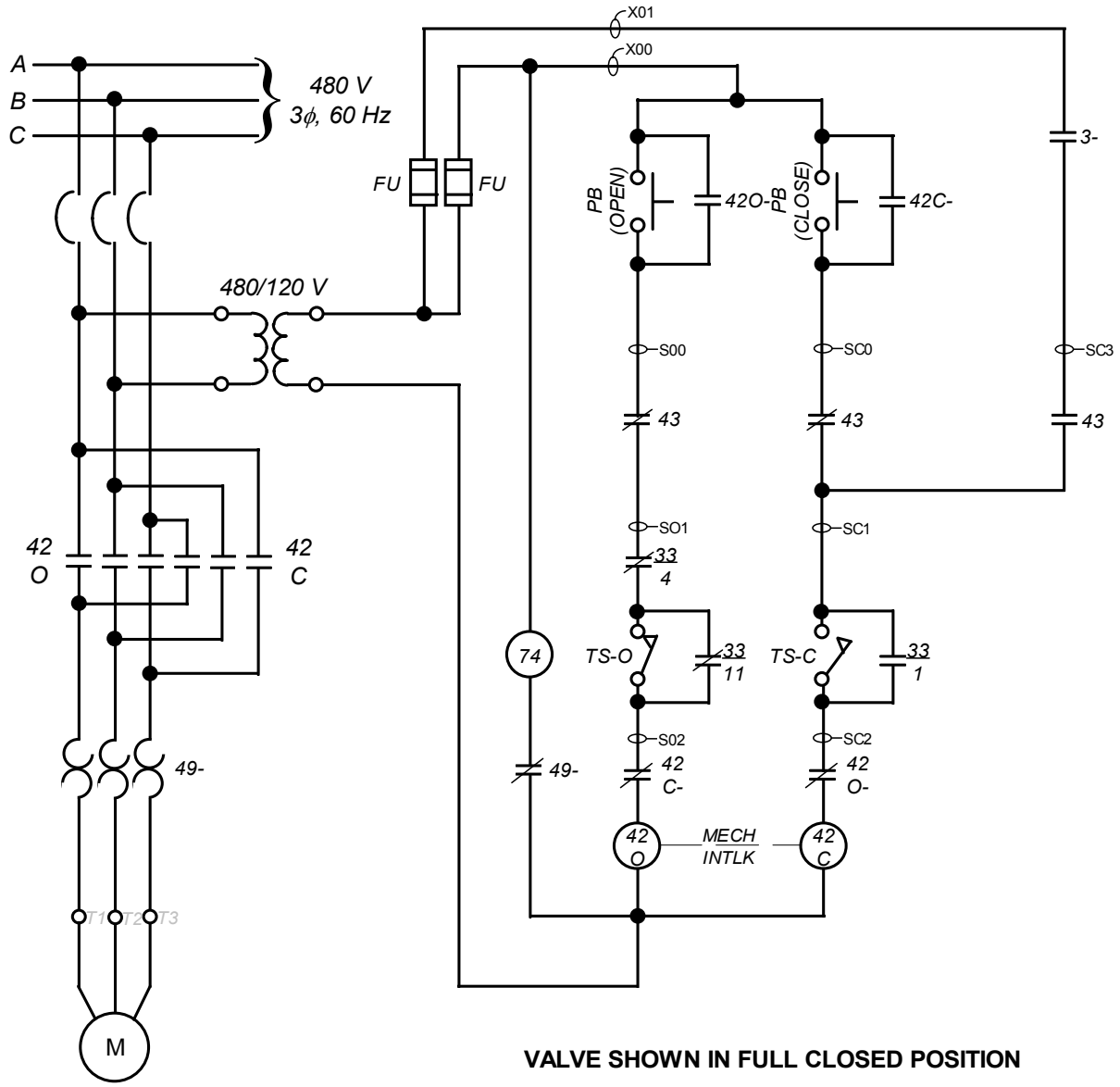

Figure K-10
Electrical Schematic for Ungrounded MOV Circuit Analysis Example

$CCF_{SO(D)} = \{2 * [0 + (0.5 / 5)]\} / 5 = 0.20 / 5 = 0.04$

Cable E provides one source conductor (X01) and one target (S02).

$CCF_{SO(E)} = \{1 * [1 + (0.5 / 5)]\} / 5 = 1.10 / 5 = 0.22$

Since $\mathbf{P}_{CC}$ for all of the cables is unity, the estimated probability for SO due to fire damage is equal to the CCF for a particular cable. Table K-5 provides the results of this probability analysis for this ungrounded MOV control circuit.

K.6 MOV with Redundant Main Contactors and Independent Control Circuits

Figure K-11 shows the block diagram for this valve and Figure K-12 shows its electrical schematic. This configuration is somewhat unique in that the operator must first actuate the permissive circuit (the upper control circuit in Figure K-12) in order to provide control power to the primary valve control circuit. Both circuits control the closure of contactors on the power leads to the motor.

Table K-5
Ungrounded MOV Failure Response (SO) Probabilities

Cable	Estimated SO Probability (Calculated)	Estimated SO Probability (From Table 10-1)
A	0.06	0.33
B	0.39	0.33
C	0.04	0.33
D	0.04	0.33
E	0.22	0.33

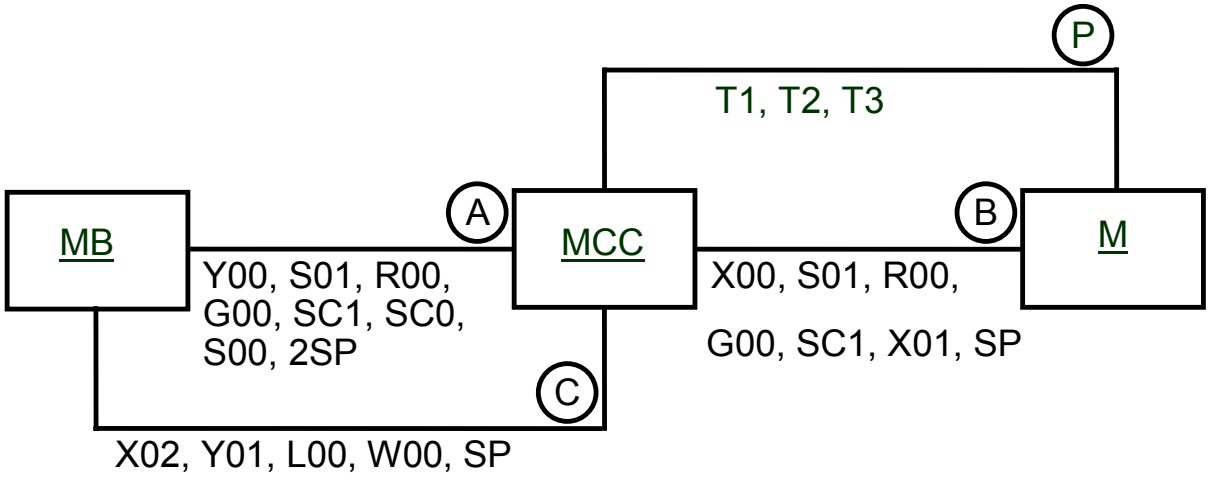

Figure K-11
Highlighted Block Diagram for MOV with Independent Control Circuits Example

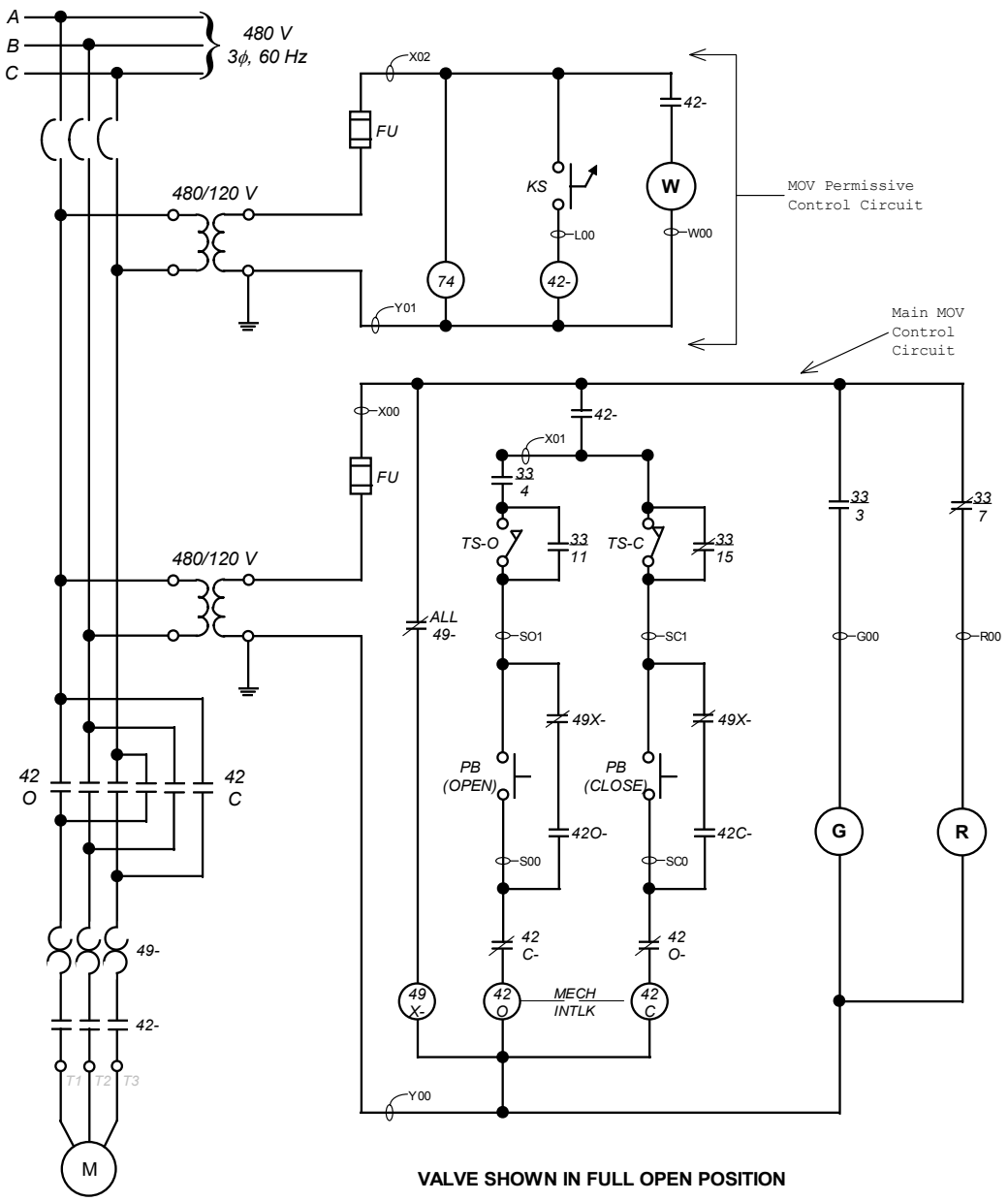

Figure K-12
Electrical Schematic for MOV with Independent Control Circuits

For Cable A, note that it is a nine-conductor thermoset cable in a tray with one ground wire (Y00). The $\mathbf{P}_{CC}$ for it is

$$\mathbf{P}_{CC(A)} = (9 - 1) / [(9 - 1) + (2 * 1) + 1] = 8 / 11 = 0.73.$$

An immediate LOC power to the circuit would result if Y00 makes contact with R00. Thus, the CCF for this condition is

$$CCF_{LOC(A)} = \{1 * [1 + (0.5 / 9)]\} / 9 = 1.06 / 9 = 0.12.$$

An erroneous indication condition will occur if R00 contacts G00. The CCF for this is

$$CCF_{EI(A)} = \{1 * [1 + (0.5 / 9)]\} / 9 = 1.06 / 9 = 0.12.$$

SO of the valve to close requires closure of the Device 42- contactors on the power leads to the motor, while R00 or SC1 is in contact with SC0 (i.e., one target and two sources), in which case the CCF will be

$$CCF_{SO(A)\,|\,(42-)} = \{1 * [2 + (0.5 / 9)]\} / 9 = 2.06 / 9 = 0.23.$$

The corresponding probabilities are calculated to be

$$\mathbf{P}_{LOC(A)} = \mathbf{P}_{CC(A)} * CCF_{LOC(A)} = 0.73 * 0.12 = \underline{0.09}$$

$$\mathbf{P}_{EI(A)} = \mathbf{P}_{CC(A)} * CCF_{EI(A)} = 0.73 * 0.12 = \underline{0.09}$$

$$\mathbf{P}_{SO(A)\,|\,(42-)} = \mathbf{P}_{CC(A)} * CCF_{SO(A)\,|\,(42-)} = 0.73 * 0.23 = \underline{0.17.}$$

Where the "| (42-)" notation indicates the condition that Device 42 in the permissive control circuit is actuated.

The results from the detailed circuit analysis of this MOV indicated that only an EI can be induced by failure of Cable B. Cable B is a seven-conductor thermoset cable routed in a tray. None of the conductors is directly connected to the circuit ground. Two normally energized conductors, R00 and X00, can cause the inadvertent actuation of the green status indication by contact with G00.

$$\mathbf{P}_{CC(B)} = (7 – 0) / [(7 – 0) + (2 * 0) + 1] = 7 / 8 = 0.88$$

$$CCF_{EI(B)} = \{1 * [2 + (0.5 / 7)]\} / 7 = 2.07 / 7 = 0.30$$

$$\mathbf{P}_{EI(B)} = \mathbf{P}_{CC(B)} * CCF_{EI(B)} = 0.88 * 0.30 = \underline{0.26}$$

Cable C will cause the fuse to blow if X02 is grounded by contact with Y01, and the circuit will become inoperable (also by a blown fuse) if Y01 is in contact with L00 or W00 when the operator manipulates the KS in this circuit. Contact between X02 and L00 will cause the device 42 coil to actuate. However, this will not, in and of itself, cause the valve to spuriously open. The conductor-to-conductor probability factor for this cable is

$$\mathbf{P}_{CC(C)} = (5 – 1) / [(5 – 1) + (2 * 1) + 1] = 4 / 7 = 0.57,$$

where the cable is a five-conductor thermoset routed in a tray. The cable configuration factors for this cable are calculated to be

$$CCF_{LOC(C)} = \{3 * [1 + (0.5 / 5)]\} / 5 = 3.3 / 5 = 0.66$$

$$CCF_{SO(C)} = \{1 * [1 + (0.5 / 5)]\} / 5 = 1.1 / 5 = 0.22,$$

and the corresponding failure probabilities are

$$\mathbf{P}_{LOC(C)} = \mathbf{P}_{CC(C)} * CCF_{LOC(C)} = 0.57 * 0.66 = \underline{0.38}$$

$$\mathbf{P}_{SO(C)} = \mathbf{P}_{CC(C)} * CCF_{CC(C)} = 0.57 * 0.22 = \underline{0.13.}$$

Remember that the probability of SO due to failure of Cable C only refers to the operation of the Device 42 in the permissive circuit. It is *not* the estimated probability of spurious operation of the MOV to the closed position.

Table 10-1 provides a best estimate value of 0.33 for each of the possible failures associated with these cables.

Table K-6 shows the results of the hot probe analyses for this particular MOV control circuit.

Table K-6
MOV with Independent Control Circuits Failure Response (SO) Probabilities

Cable	Failure Mode	Estimated Probability (Calculated)	Estimated Probability (From Table 10-1)
A	LOC	0.09	0.33
	EI	0.09	0.33
	SO[1]	0.17	0.33
B	EI	0.26	0.33
C	LOC	0.38	0.33
	SO[2]	0.13	0.33

[1] Requires the concurrent actuation of the permissive circuit coil (Device 42) in order to occur.

[2] SO of the Device 42 contactor coil only, not a spurious operation of the valve.

Appendix L

Appendix for Chapter 11, Main Control Board Fires

L
APPENDIX FOR CHAPTER 11, MAIN CONTROL BOARD FIRES

L.1 Introduction

This appendix describes the process for estimating the conditional probability of damage to a set of target items inside the main control board (MCB). Plant design practice regarding the placement of electrical components directly associated with the main control functions varies substantially. This variability presents a challenge to the Fire PRA methodology. Uniform treatment of the fire frequency and fire characteristics for fire areas associated with these main control functions is desired.

At most plants, there is a designated MCB, although the actual contents of the MCB may vary from plant to plant. If the plant under analysis does not have a designated main control board, the Fire PRA should be able to easily designate that set of MCR panels that represents, in effect, the MCB using the information provided here.

The primary point of design variability arises from the placement of control relays and signal conditioning equipment (e.g., printed circuit cards associated with signal processing). Some or all of these components may be found within the MCR itself (typically in the "back panels" of the control room), or in a separate plant compartment or fire area. Common examples of separate compartments are signal conditioning equipment rooms, auxiliary electrical equipment room, relay rack rooms, or other similar areas. In the experience of the authors, such compartments have been observed directly adjacent to the MCR, in an area above or below the MCR, integrated within the cable spreading room, and in compartments associated with the switchgear fire areas.

This appendix is specific to analysis of fires in the MCB and the MCB only. This appendix does not cover other main control room (MCR) electrical panels, nor those panels associated with the main control functions that may be located outside the MCR as described above. Those MCR or MCR-related electrical panels outside the MCB are treated within the context of other plant-wide electrical cabinets, even if those panels are physically located within the MCR.

- The MCB is defined as the collection of control panels inside the MCR of a nuclear power plant from which operators control the plant on a day-to-day basis.
- The MCB would typically include the front face of the "horse shoe" (a typical configuration in most plants), other control or instrumentation display panels that are typically placed in full view of the areas where control room operators are expected to spend most of their time, and other panels in the control room proper that contain control switches or instrumentation displays that are used for plant control or emergency shutdown.
- The MCB would typically not include the back panel of the main board (if such exist).

- The MCB would also not include those electrical panels devoted primarily to housing control relays, printed cards (such as signal conditioning cards), or all other devices that the operators do not directly use to maintain plant control or safe shutdown.

One aspect of the treatment of MCB fires was the need to identify some set of fire events as being associated with the MCB so that a fire frequency could be estimated.

A review of Control Room fire events in the Fire Event Database (FEDB) [L.1] reveals that none of the Control Room fires affected items much beyond the point of ignition. In all cases, the fire was discovered by Control Room personnel and extinguished using hand-held extinguishers. Since the Control Room is occupied at all times, it is expected that the likelihood of a very large fire affecting a large number of items inside the main control board is very low. If such a fire should occur, the principal impact would be Control Room abandonment by the operators rather than widespread equipment damage. The fire brigade would remain in the Control Room and continue fighting the fire, which would most likely retard the fire spread. Therefore, it is recommended for the fire risk analysts to identify localized areas on the control boards where control and instrumentation damage may have some significant impact on core cooling after a reactor trip. For each localized area, the analyst should identify specific target items. The largest distance between these target items is used in the methodology described below as the main measure for the severity of fire needed to cause a significant damage.

A wide range of fire scenarios may impact the same set of target items. The difference between the fire scenarios would lie in their point of origin, items burning, and distance to the target set. For the methodology described below, it is assumed that all fires start inside the control panel and there is a uniform distribution of ignition sources and combustible materials attached to the backside of the control board's front panel.

Unfortunately, modeling fire spread through the combustible materials inside a main control board is beyond the capabilities of current state-of-the-art analytical tools. In the absence of an analytical tool, a probabilistic model based on information obtained from EPRI's FEDB [L.1], and a series of cabinet fire experiments reported in NUREG/CR-4527 [L.2] has been developed. The probabilistic model estimates the likelihood that a set of targets separated by a predetermined distance would be affected by a fire.

The analysis leading to damage likelihood is based on the following assumptions:

- All control panel fires have an opportunity to grow and damage the postulated target set.
- The combustible materials are evenly distributed along the entire width and height of the control boards with no interruption and barriers separating subgroups of items and electrical wiring.
- A fire igniting at any point of the control board can affect targets above and below the point of fire origin.

As part of the first assumption, it is also assumed that a fire starting above a target set has the potential to cause damage. This assumption is not unreasonably conservative because in control panel fire experiments, it was observed that as fire grows upward, burning materials may separate from the panel and drop down on the floor or other items within the board and cause additional fires below the original fire level.

L.2 Probability of Target Damage

The frequency of damage to target set *i* can be estimated using the same formulations as those presented in Task 11. Assuming that a set of fire scenarios may lead to the postulated damage, the frequency of damage can be written as:

$$\lambda_i = \lambda_{MCB} \cdot \sum SF_i \cdot P_{ns-i}$$

where

λ_i = frequency of damage to target set *i*

λ_{MCB} = fire initiation frequency of the main control board

SF_i = severity factor for the postulated fire scenario *i*

P_{ns} = nonsuppression probability for the postulated fire scenario *i*

To simplify the analysis, all target sets are defined in terms of the distance *d* between the targets corresponding to a calculated *ccdp*. Using this, definition the frequency of damage can be written as a function of *d* as:

$$\lambda(d) = \lambda_{MCB}\,[SF \cdot P_{ns}](d)$$

Where $[SF \cdot P_{ns}](d)$, a function of *d*, is the overall likelihood of damage to a target set with maximum internal distance *d* among its elements. That is, the likelihood of an unsuppressed severe fire inside the MCB. Figure L-1 depicts the final numerical values of $[SF \cdot Pns](d)$ as a function of *d*. The integration over all fire scenarios leading to the graphs in Figure L-1 is described below.

L.3 Calculating Scenario Frequency

To estimate the frequency of target set damage, the analyst should use the following steps.

1. Identify the largest distance, *d*, between the elements of the target set.

2. Determine whether or not the cables and wire insulations are qualified per IEEE-383.

3. Obtain the likelihood value, $[SF \cdot P_{NS}](d)$, from Figure L-1.

4. Multiply the likelihood value from Step 3 with fire ignition frequency for main control board, λ_{MCB}, obtained in Task 6. The analyst should apportion the generic frequency for control room/electrical cabinets to the MCB (or any other cabinet in the MCR) using the location and ignition source weighting factors.

$$\lambda(d) = \lambda_{MCB}\,[SF \cdot P_{ns}](d)$$

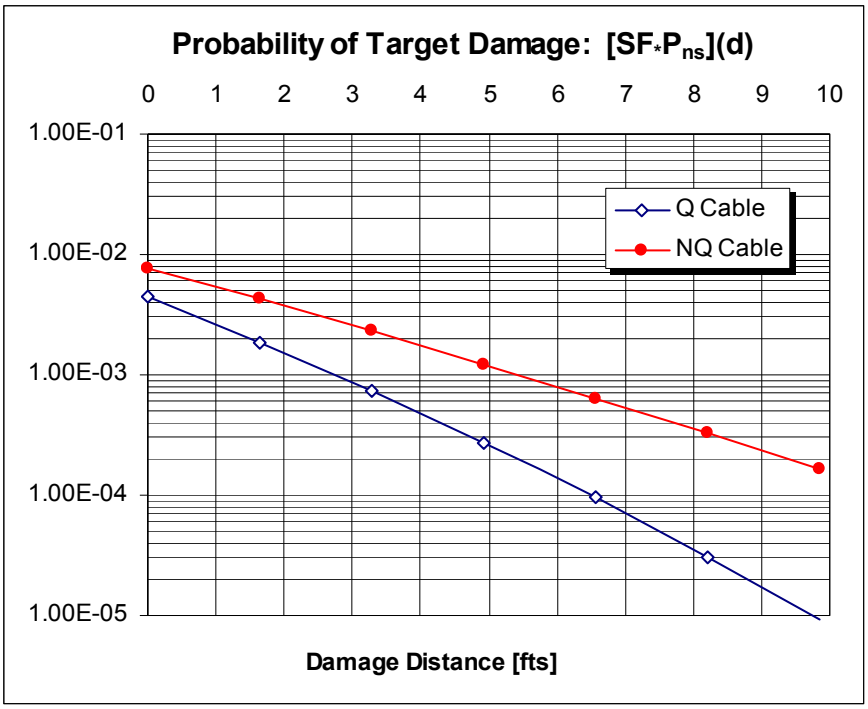

Figure L-1
Likelihood of Target Damage Calculated as the Severity Factor Times the Probability of Nonsuppression for MCB Fires

L.4 Model Description

The probabilistic fire growth model for the MCB (or fire growth inside any electrical cabinet) was developed based on (1) the nonsuppression probability curve for the MCR (described in Appendix P), and (2) fire intensities in control cabinets measured in a series of experiments reported in NUREG/CR-4527 [L.2]. As described in Appendix P, the fire durations reported in [L.1] were used to estimate the mean time to suppress a fire for the main control room. Cabinet fire experiments described in [L.1] were used as a basis for developing probability distributions for the heat release rate for control cabinets with qualified and non-qualified cables (see Appendix G).

Target damage is assumed if the fire-generated temperature around a target item reaches the damage threshold. In the absence of an analytical fire model for cabinet configurations, this temperature is conservatively estimated using an axy-symmetric plume temperature correlation. This correlation estimates gas temperature at the distance *r* above the fire. To better describe this assumption, consider a set of two targets inside the main control board a distance *d* from each other. A fire is assumed to start in any of the two targets. The second target in assumed to be subjected to plume temperatures calculated a distance *d* from the fire origin, regardless of the geometrical orientation between the two targets (horizontal, vertical, or other).

A number of plume temperature correlations are available in the Fire Protection Engineering literature. All of them are appropropriate for this application. Alpert's correlation for plume temperature [L.3] offers the simplest model in terms of required inputs. The Alpert correlation for plume temperature can be expressed as:

$$\Delta T = 16.9\left(\frac{\left(k\dot{Q}\right)^{2/3}}{r^{5/3}}\right)$$

where

ΔT	=	plume temperature rise to target damage threshold temperature,
k	=	location factor (dimensionless),
Q	=	heat release rate,
r	=	distance from the fire origin to the farthest target.

Since the postulated fires are assumed to occur behind the control panel, the location factor $k = 2$ is used representing fire plume conditions along a wall.

To conduct the integration over the entire range of fire scenarios, it is postulated that a fire may initiate at any point on the control panel. Figure L-2 illustrates the front surface area of a main control board and two targets (represented by the symbol "o") separated by a distance *d*. The distance between bottom-left corner of the rectangle (coordinates 0,0) to the farthest target item can be approximated as follows, assuming the two targets are aligned with the diagonal (dashed line):

$$r(d,w,h) = \sqrt{(w+\frac{d}{2})^2 + (h+\frac{d}{2})^2}$$

The term $r(d,w,h)$ represents the distance between the origin of the fire and the farthest target. That is, a fire starting in a given origin will need to generate a damaging plume temperature a distance $r(d,w,h)$ in order for the target set to be considered damaged.

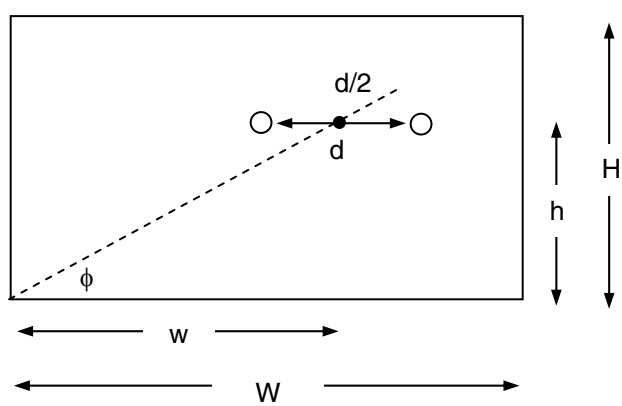

Figure L-2
A Representation of the Front of a Control Panel with Two Target Elements

To estimate temperature rise around the farthest target, *r(d,w,h)* is used in Alpert's correlation. This is certainly a conservative practice, because, as mentioned earlier, it disregards the orientation of the fire initiation point with respect to the target set. As noted above, because burning materials may drop on lower elements of the panel, the level of conservatism is expected to be less than otherwise. Also, accumulation of hot gases inside the cabinet is not modeled (another nonconservative aspect of the model).

Alpert's correlation can be solved for the heat release rate:

$$Q(d,w,h)) = \frac{1}{k}\left[\frac{\Delta T \cdot r(d,w,h)^{5/3}}{16.6}\right]^{3/2}$$

The time to damage can be estimated from the heat release rate profile. A hypothetical case is presented in Figure L-3. The initial rise in heat release rate follows a t^2 growth profile, reaching the peak in about 12 minutes. Twelve minutes is the average fire growth of the electrical cabinet fire experiments documented in NUREG/CR-4527 (see Appendix G for more details). The time to damage is then estimated as:

$$t_{Dam}(d,w,h) = 12\left(\frac{Q(d,w,h)}{Q_{Peak}}\right)^{0.5}$$

The time to damage is used in the following equation to estimate the probability of nonsuppression:

$$P_{NS}(d,w,h) = e^{-\lambda \cdot t_{Dam}(d,w,h)}$$

where λ is the parameter of the exponential distribution characterizing the applicable suppression curve (see Appendix P for more details). Of all the parameters used in establishing the probability of nonsuppression, only the uncertainty in Q_{Peak} is quantified in this procedure. From that uncertainty distribution , $f(Q_{Peak})$, the severity factor, *SF(d,w,h),* can be estiablished (similar to the method described in Appendix E). The severity factor is the probability of Q_{Peak} being greater than *Q(d,w,h)* obtained using Alprert's correlation or:

$$SF(d,w,h) = 1 - \int_0^{Q(d,w,h)} f(Q_{Peak})dQ_{Peak}$$

Finally, the likelihood of damage to a target set separate by distance *d* can then be calculated using the following integral:

$$[SF \cdot P_{ns}](d) = \frac{1}{H \cdot W}\int_0^{HW}\int_0 SF(d,w,d) \cdot P_{ns}(d,w,d)dwdh$$

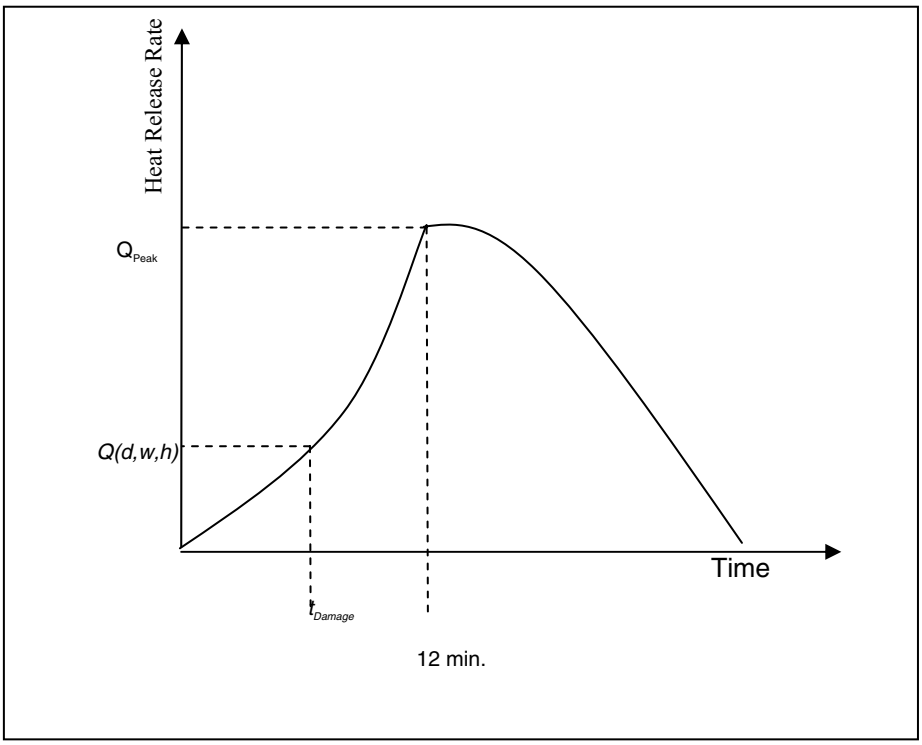

Figure L-3
Heat Release Rate Profile

Notice that all possible fire origin locations with respect to the target set are accounted for in the integral analysis. The results of the integral analysis are provided above in Figure L-1. Specifically, Figure L-1 provides the likelihood of target set damage for two cable types. The two graphs in Figure L-1 are based on the following:

- The width and height of a typical control board were assumed to be W = 60′ and H = 10′.
- Damage threshold temperature for qualified cables was assumed to be ΔT = 625°F and for nonqualified cables ΔT = 400°F (see Appendix H on damage criteria).
- From Appendix G, the probability distributions for peak heat release rate are:
  - Gamma (0.7, 204) for fires involving qualified cable,
  - Gamma (0.45, 366) for fires involving nonqualified cable.
- The probability of no-suppression curve is $e^{-\lambda \cdot t}$, where λ is calculated parameter for the Main Control Room fires = 0.38 (see Appendix P for more details).

L.5 Example

The control cables for two motor-driven auxiliary feed water (AFW) pumps are located 3’–7” apart inside the MCB. The MCB has IEEE 383 qualified cables. From Figure L-1, the probability of failing the two targets is around 6.0E-4.

From Task 6, the generic frequency for main control room/electrical cabinets is 2.1 E-3. Assuming this is a shared control room for two units, the frequency of an unsuppressed challenging fire in the MCB is calculated as:

$$\lambda_c = 2.1E\text{-}3 \times 2 \times 6.0E\text{-}4 = 2.5E\text{-}6$$

L.6 References

L.1 *Fire Event Database and Generic Ignition Frequency Model for U.S. Nuclear Power Plants*, EPRI, Palo Alto, CA: 2001. 1003111.

L.2 Chavez, J.M. and S. P. Nowlen, *An Experimental Investigation of Internally Ignited Fires in Nuclear Power Plant Control Cabinets – Part II, Room Effect Tests*, NUREG/CR-4527, Sandia National Laboratories, November 1988.

L.3 *Handbook of Fire Protection Engineering* – 2nd Edition, Society of Fire Protection Engineers, Bethesda, Maryland, 1995.

Appendix M

Appendix for Chapter 11, High Energy Arcing Faults

M
APPENDIX FOR CHAPTER 11, HIGH ENERGY ARCING FAULTS

M.1 Introduction

Switchgear, load centers, and bus bars/ducts (440V and above) are subject to a unique failure mode and, as a result, unique fire characteristics. In particular, these types of high-energy electrical devices are subject to high-energy arcing fault (HEAF). This fault mode leads to the rapid release of electrical energy in the form of heat, vaporized copper, and mechanical force. Faults of this type are also commonly referred to as high energy, energetic, or explosive electrical equipment faults or fires. Similar failure modes can occur in large oil filled transformers. However, this appendix does not address modeling HEAF events on oil filled transformers. Task 6 provides information on dealing with oil filled transformer events.

The arcing or energetic fault scenario in these electrical devices consists of two distinct phases, each with its own damage characteristics and detection/suppression response and effectiveness. The first phase is a short, rapid release of electrical energy followed by ensuing fire(s) that may involve the electrical device itself, as well as any external exposed combustibles, such as overhead exposed cable trays or nearby panels, that may be ignited during the energetic phase. The second phase, i.e., the ensuing fire(s), is treated similar to electrical cabinet fires described elsewhere in this procedure, with one distinction. Any closed electrical cabinet subject to a HEAF is opened to a fully ventilated fire. In dealing with postulated switchgear and load center fires, both phases should be considered.

This appendix describes only the damage characteristics and detection/suppression aspects of the energetic phase of the HEAF fires. Frequencies for both HEAFs and general electrical cabinet fires can be found in the procedure for Task 6, Fire Ignition Frequencies.

The damage and detection/suppression behavior of the energetic phase of the HEAFs described in this appendix is based on the U.S. commercial nuclear industry experience.

M.2 High Energy Electrical Arcing Phenomena

A high current arcing fault in a high-energy electrical device is a phenomenon that can occur and, in some instances, may eventually produce a catastrophic event often described as “explosive” or an “exploding fault.”

An arc is a very intense discharge of electrons between two electrodes that are carrying an electric current. Since arcing is not usually a desirable occurrence, it is described as an “arcing fault.” The arc is created by the flow of electrons through charged particles of gas ions that exist as a result of vaporization of the conductive material.

The two main components of an arc are the arc column and the arc root. Arc columns are conductive, high-temperature gases (fumes, vapors) known as plasma. Plasma can develop when the electrodes reach temperatures sufficient to cause rapid vaporization of the conductive materials, thus putting ions in the atmosphere and forming the conductive path between the electrodes. Temperature will affect the conductivity of the arc column significantly, and temperatures of 6000K in open arcs and 25000K in high-power circuit breakers at maximum current have been observed [M.1]. The arc roots are high electric fields with an elevated temperature gradient consisting of the anode and cathode roots, which appear on the electrodes. The anode root cannot emit the positive ions needed for arcing, and is lesser in character forming of the two. Therefore, the cathode roots have been studied in great detail. These originate from a region on the negative electrode. Specifically, for high-energy electrical devices, the electrodes normally use a low melting point metal such as copper (1356K), and copper and similar materials serving as electrodes in an arc are susceptible to 'cold cathode' arcs.

The arcing fault can reach the unstable conditions that may drive it the point to where the exploding wire phenomena can occur. This event described here is the "energetic electrical fault."

M.3 U.S. Nuclear Power Plants Operating Experience

There are a number of components in a nuclear power plant (NPP) that are susceptible to a high-energy event followed by a fire. This is seen in the U.S. NPPs [M.1]. These high-energy events are the result of mechanical (diesel generator crankcase), chemical (hydrogen), or electrical (arcing) faults. The discussion in this appendix is limited to the examination of the high-energy electrical arcing faults. Even though these arcing faults have occurred in large outdoor transformers, they are not covered in this appendix. For these high-voltage transformers, damage to the transformer itself and other equipment within 50 feet that is not shielded by structural wall should be assumed. The risk associated by these events, however, is likely to be the same as or lower than those from loss of offsite power.

The review and characterization of the damage and detection/suppression behavior for the energetic phase of high-energy-arcing faults is based on the examination of 11 incidents that occurred in U.S. nuclear power industry between 1979 and 2001. A summary of these events is shown in Table M-1.

Following are some of the observations from the HEAFs in the U.S. commercial nuclear industry, which form the basis for characterizing the damage and suppression as the result of the energetic phase.

1. Indications of heavy smoke in the area, which may delay identification of the fire origin and whether the fire is still burning.

2. In many cases, these events report detection by plant personnel. However, due to quick smoke release, particularly with events that are severe enough to cause external damage, it is likely to activate smoke detection systems very early into the event.

3. In nearly all of these events, the HEAF initiates in the feed breaker cubicle. This is because this is where most of the electrical energy in a high-energy cabinet resides.

4. The HEAFs in switchgears occur with more damage in the non-emergency (non class 1E), rather than class 1E emergency switchgears. Of the 12 events involving HEAF, four are known to occur in non-1E switchgears. The description of the remaining eight events does not specify the type of switchgear. However, as many as three may have occurred in 1E switchgears because they are 480V. The four non-class-1E HEAFs are the most severe of such events. In fact, these are the only events, from the 12, that caused external damage beyond the switchgear and required 10 minutes or more to extinguish the ensuing fire(s). All other events with known duration and/or suppression time required significantly less time to extinguish and were more benign.

   This difference may be attributed to the following factors.

   - Higher-energy loads are fed from the non-1E (e.g., Reactor Coolant/Feed Pump) than from 1E switchgears where the largest loads are RHR pumps.
   - The feed breakers in a 1E switchgear run near full current during power operations, while non-1E switchgear current varies with plant operating modes.
   - Testing and maintenance practices differ between 1E and non-1E switchgears. Class 1E switchgears typically get more preventative maintenance on breakers and thermography of the cabinets and bus bars. This observation is, however, not quantified at this time. Further review of these events and tie-in to the bases, such as those listed above, would be necessary.

5. HEAFs occurring in 480V switchgears did not report damage beyond the switchgear itself, but some resulted in the cabinet opening.
6. Manual firefighting operations may be delayed due to uncertainty in the specific location of the fire.
7. Initial use of fire extinguishers may be ineffective in severe HEAF events regardless of the extinguishing agent (CO_2, Halon, or dry chemical). The fires were eventually suppressed with water by the fire brigade.
8. No conclusions can be made regarding the effectiveness of fixed fire suppression systems. Only one event was successfully suppressed with an automatic Halon system.
9. Durations of the fires involving HEAF range from minutes to over an hour. The short durations generally reflect events that do not result in large ensuing fire(s), either in the device itself or external fires.
10. Sustained fires after the initial HEAF involve combustible materials (cable insulation, for the most part) near the cabinet.
11. Damage may extend to cables and cabinets in the vicinity of the high-energy electrical cabinet.
12. Damage to cabinet internals and nearby equipment (if observed) appears to occur relatively early in the event.
13. In about half of these events, the damage is limited to the electrical device.

Table M-1
Summary of the High-Energy Arcing Faults for Switchgears and Load Centers in the U.S. Nuclear Power Industry: 1979 through 2001

	Event	Initiating Electrical Component	Summary of the Event [1]	Notes on Zone of Influence
1	FEDB INO = 175 Date = 11/27/79 Loc = Aux Bldg SWGR Ext. = Self-ext. Duration = 39 min Supp time = N/A No LER Not included in HEAF frequency	480V Switchgear/ bus (1E?)	A loud noise and alarms came from the control room and the reactor was manually tripped. A flash was observed at the base of the 480V No. 1 switchgear. The flame self-extinguished and the fire brigade confirmed only smoke was present.	The description of the event does not mention damage external to the cabinet.
2	FEDB INO = 434 Date = 08/02/84 Loc = Turb. Bldg SWGR Ext. = Auto halon Duration = 1 min Supp time = 1 min LER (Yankee Rowe) Included in the HEAF frequency as an undetermined (counted as 0.5 of an event)	480V Switchgear (1E?)	During normal operation in Mode 1, a fault occurred in the 480 V supply ACB to bus 4-1 that resulted in 4-1 Bus isolation, fire detection initiation, and halon discharge. The fire brigade responded as required to verify that fire was out. The cause of the fault was attributed to high resistance in the main disconnecting contacts of the center phase of the ACB which caused an arc to propagate to the outside phases.	From the description, it may be inferred that the damage to the switchgear was substantial (scram, 13-day outage, and $50-100K loss). Enough smoke to activate an automatic system. The description of the event does not mention any damage external to the switchgear.
3	FEDB INO = 498 Date = 12/03/85 Loc = Turb. Bldg SWGR Ext. = De-energized Duration = 10 min Supp time = N/A LER no. 85 028 00 (Crystal River 3) Not included in HEAF frequency	6900V Switchgear (non-class 1E)	A serviceman near the breaker suffered first and second degree burns. No evidence of a sustained fire found. The room contained large volumes of smoke, so ventilation of the room was started using portable smoke ejectors. Damage was limited to the breaker cubicle.	The cubicle door was blown open and a fire door nearby was scorched and opened. The switchgear was opened, damage within ZOI observed.

Table M-1
Summary of the High-Energy Arcing Faults for Switchgears and Load Centers in the U.S. Nuclear Power Industry: 1979 through 2001 (Continued)

	Event	Initiating Electrical Component	Summary of the Event[1]	Notes on Zone of Influence
4	FEDB INO = 947 Date = 01/03/89 Loc = Turb. Bldg SWGR Ext. = Fire Brigade Duration = 59 min Supp Time = 46 min LER no. 269 89 002 (Oconee 1) Included in the HEAF frequency	6900V Switchgear (non-class 1E)	CO_2 fire extinguishers were used for the first time around 15 minutes after the fire brigade was dispatched. The fire was not suppressed. Dry chemical extinguishers were used 8 minutes after the CO_2 extinguishers. The fire was not suppressed. Eighteen minutes after the dry chemical extinguishers were used, the fire brigade decided to use water fog on the fire. Fire reported out 15 minutes later. Internal components in the switchgear caught fire. Cables near the switchgear fire caught fire. The event lasted around 60 minutes.	The event shows significant damage to the breaker cubicle (blown-off door on the back). With regards to horizontal damage, even though no target was located directly in the sight of the breaker cubicle, it is evident from the debris that any target within 3-5′ would have been affected by the high-energy event. It is not clear what the functional failure would have been if a cabinet was located 3-5′ in the back of the breaker cubicle. Smoke damage was observed in the adjacent cubicles. Fire in internal components and nearby cables evidenced the possibility of a sustained fire after the high-energy arcing fault. The switchgear was opened, damage within ZOI observed.
5	FEDB INO = 678 Date = 03/02/88 Loc = Turb. Bldg SWGR Ext. = De-energized, Self Ext. Duration = N/A Supp Time = N/A LER no. 305 88 001 (Kewaunee) Not included in HEAF frequency	Bus bar/Bus duct	A 10′ section of the bus bar running from the main auxiliary transformer to the bus switchgear (1-1 and 1-2) was damaged due to installation failure and a subsequent fault. The differential current protection functioned as designed and opened all breakers on the affected protection zone. This deenergized the affected bus and terminated the fire. During normal operations, a combination of insulation failure, debris accumulation, and possibly water resulted in an electrical fault in a main (4000 amp) power bed bus bar. In addition to damage to the effected bus, “several non-safety related cables located in a cable tray adjacent to the bus experienced insulation failure.”	Damage to cables in a tray adjacent to the bus bar. The distance between the bus bar and the cable tray is unclear. Damage within ZOI observed.

Table M-1
Summary of the High-Energy Arcing Faults for Switchgears and Load Centers in the U.S. Nuclear Power Industry: 1979 through 2001 (Continued)

	Event	Initiating Electrical Component	Summary of the Event[1]	Notes on Zone of Influence
6	FEDB INO = 922 Date = 07/10/87 Loc = Turb. Bldg SWGR Ext. = De-energized Duration = N/A Supp Time = 3 minutes LER no. 305 87 009 (Kewaunee) Not included in HEAF frequency	4160V Bus bar (non 1E?)	Insulation on a 4160 V bus bar, located in the Turbine Building, failed. This condition resulted in a phase to ground fault which caused extensive damage to the bus bar and a fire. The bus fire terminated once the transformer was deenergized. A smaller fire was extinguished by the equipment operator when rags and rubber goods on a maintenance cart were ignited by the falling aluminum slag. Equipment damage was limited to a 30′ section of the bus-bar from the main auxiliary transformer to buses 1-3, 1-4, 1-5, and 1-6. There was no other equipment damage as a result of this event. Bus bar is a 1/2″ by 4″ flat aluminum bar, full round edge, and rated at 3000 amps. All three phases of the bus work is insulated with flame retardant insulation and supported on molded flame retardant glass polyester supports. (LER)	Falling aluminum slags igniting transient combustibles. The distance is not clear from the description. Potential damage within ZOI.
7	FEDB INO = 1510 Date = 07/10/87 Loc = SWGR Ext. = Self Ext. Duration = < 5 minutes Supp Time = N/A no LER Not included in HEAF frequency	4160V Switchgear/ transformer	Operator found smoke from the 4160 switchgear. Further inspection discovered that the smoke was coming from the potential transformer cubicle. The transformer was found to have a hole in the top of it. The fault was localized to transformer itself. No damage to any other component was observed.	Damage was limited to the transformer cubicle. The transformer was on fire. All other components in the switchgear were in good condition. The switchgear was opened, no damage within ZOI reported.
8	FEDB INO = 2175 Date = 06/10/95 Loc = Turb. Bldg Ext. = Fire brigade Duration = N/A Supp Time = 57 min (from LER) LER event (Waterford 3) Included in the HEAF frequency	4160V Switchgear (non-class 1E)	An operator notices smoke in the TGB switchgear. Twenty-nine minutes after operator notices smoke, a fire is reported above the A2 switchgear. The fire brigade attempted to extinguish the fire using Halon, CO_2, and dry chemical extinguishers. 43 minutes after the initial attempt to extinguish the fire with fire extinguishers, the offsite Fire Department applies water to the insulation above the A2 bus.	Major damage to two cubicles. 10′ of feeder cable destroyed. External heat damage to jackets of four of 15 feeder cables. Burnt marks on cable conduits.

Table M-1
Summary of the High-Energy Arcing Faults for Switchgears and Load Centers in the U.S. Nuclear Power Industry: 1979 through 2001 (Continued)

	Event	Initiating Electrical Component	Summary of the Event [1]	Notes on Zone of Influence
			The degree of damage to the breaker and surrounding equipment indicates that the fault energy of the breaker was extremely high. Due to the extent of the damage during this failure, evidence normally utilized to evaluate the conditions of the circuit breaker was not available. The arc chutes were destroyed, the contact structures were damaged extensively, and the breaker frame and cubicle were also damaged. The main bus and bus compartment experienced severe arcing damage. The center phase (A phase) of the breaker sustained the worst damage. The right phase (B phase, looking at the front of the breaker) arcing contact was hardly damaged, the middle phase arcing contact was totally destroyed, and the left one (C phase) was partially destroyed. The main contacts on all the phases were destroyed.	The switchgear was opened, damage within ZOI observed.
			The fire caused major damage to the #1 & #2 cubicles and destroyed approximately 10′ of the feeder cables. Cubicle #1 contained the 4160 volt feeder from the Unit Auxiliary Transformer (UAT) and Cubicle #2 contained the Potential Transformer and associated relays and components. There was general smoke and slight heat damage to the exterior of the remaining cubicles in the A2 bus. In addition, there was external heat damage to the jackets of four of the 15 feeder cables from the Start Up Transformer (SUT) to the A2 bus. There were also burn marks on the conduit of the cables, which supply 6.9 KV to RCP 1A and 2A motors.	

Table M-1
Summary of the High-Energy Arcing Faults for Switchgears and Load Centers in the U.S. Nuclear Power Industry: 1979 through 2001 (Continued)

	Event	Initiating Electrical Component	Summary of the Event [1]	Notes on Zone of Influence
			Although the heat release rate was undoubtedly large (estimated to be much larger than in most switchgear fires), severe damage was limited to two cubicles on the A2 bus and the cables in the UAT A to A2 bus duct. Minor damage occurred to the SUT A to A2 bus duct and adjacent A2 and A1 switchgear cubicles. The B train of offsite power (SUT B to B2 and its bus duct tie to B3) was not affected. The two trains of offsite power are well separated; the bus ducts are physically separated by about 20′ and a concrete block radiant shield separates the switchgear cubicles themselves.	
9	FEDB INO = 2197 Date = 04/12/94 Loc = Switchgear Rm Ext. = Self Ext. Duration = N/A Supp Time = N/A no LER Not included in HEAF frequency	4160V Switchgear	4Kv breaker failed with fireball and smoke. The fire apparently was self-extinguished. (EPRI FEDB) During an attempted start of a pump in Unit 1, a breaker opened due to a fault, which resulted in a flash of fire and smoke. There was no continuing fire. The bus bar/stab connections had arced and sparked, and were found to be badly discolored, pitted, and deformed. Some corrosion was also found. (Plant FPE)	Not enough information for developing a ZOI.
10	FEDB INO = 2336 Date = 08/22/90 Loc = Switchgear Rm Ext. = Portable extinguishers Duration = 0-5 minutes Supp Time = N/A no LER Not included in HEAF frequency	480V MCC?	Incident Report Number 1-90-52. While removing Clearance 594741 on HS-P-1B places MCC pan back on bus, closed cubicle door and turned line starter on. At the local pump controller the operator noted the green 'off' light flickering. When the control switch was placed to the "on" position, a loud explosion was heard. Smoke and flames were seen at MCC 1-12 Cubicle B (located in normal switchgear room in the control building). Cubicle door had blown open, MCC had tripped, and Control Room noted loss of "F" 480 volt substation. A CO_2 fire extinguisher was used by the operator to extinguish the fire. MCC inspection revealed what appears to have been shorted bus-bars. Motor was cool to the touch. Both MCC supply breaker and substation feeder breaker tripped on overcurrent. It is suspected that a piece of foreign material (possibly broken stab spring) was jarred loose when contactor on MCC pan was pulled in resulting in a phase-to-phase short.	The MCC was opened, no external damage is mentioned.

Table M-1
Summary of the High-Energy Arcing Faults for Switchgears and Load Centers in the U.S. Nuclear Power Industry: 1979 through 2001 (Continued)

	Event	Initiating Electrical Component	Summary of the Event [1]	Notes on Zone of Influence
11	FEDB INO = 2489 Date = 07/13/90 Loc = Switchgear Rm Ext. = Self Ext. Duration = 0-5 minutes Supp Time = N/A no LER Not included in HEAF frequency	4KV Switchgear	While discussing the installation of an additional current transformer on the bus side of a 1200 amp breaker in a 5KV breaker cabinet in Unit 2, one of the electricians contacted energized 4KV feed cables with his left arm and right side of his chest. An explosion resulted which killed the electrician, and injured three others. The only fires that resulted were on the electrician that was killed, and another electrician standing nearby. The fires were extinguished with a fire extinguisher. (Plant FPE)	Not enough information for developing a ZOI. It is unclear how close the serviceman was to the breaker or how the injuries occurred.
12	FEDB = 2424 [2] Date = 02/03/01 Loc = Switchgear Rm Ext. = Fire brigade, portable ext. Duration = 136 min Supp Time = N/A LER event (San Onofre 3) Included in the HEAF frequency	4160V Switchgear (non-class 1E)	The event was caused when a breaker faulted and started a fire within the breaker cubicle. Ionized gases and smoke diffused through cable passages between adjacent cubicles and entered the Reserve Auxuliary Transformer feeder breaker cubicle. The fire consumed much of the breakers nonmetallic parts and caused substantial melting of current carrying components. Five cabinets in the bus were replaced/rebuilt. This includes replacement of electrical equipment and cables that were either burned directly or damaged by the fire. Fire brigade is dispatched after the alarm. Three minutes later there is knowledge about the room location of the fire. Seven minutes after the alarm, the fire brigade arrives at the scene. Four minutes after the fire brigade arrives it is determined that the fire is in the switchgear cabinet. Two minutes later, fire extinguishers were used. Suppression appears not to be effective. Around two hours later, the cabinet was opened and flames were observed inside. Fire extinguishers were used again, but they were ineffective. Two minutes later, water was applied and fire was finally extinguished.	Damage to the entire bus. Evidence of a sustained fire burning internal combustibles and cable trays above. Back wall of the cabinet was blown open. Damage to a front cabinet 4.5’ away. Not clear how and when this cabinet ignited. Ignition of trays 2’, 6’, and 7.5’ above cabinet. Not clear when lowest tray ignited.

Table M-1
Summary of the High-Energy Arcing Faults for Switchgears and Load Centers in the U.S. Nuclear Power Industry: 1979 through 2001 (Continued)

	Event	Initiating Electrical Component	Summary of the Event [1]	Notes on Zone of Influence
			The back cabinet wall was blown open. Three trays above the cabinet were damaged primarily due to the ensuing fire. The trays were located 2', 6', and 7'-6" above the top of the cabinet. A front cabinet, 4'-6" away was also damaged. Damage included doors, and protective relays. This cabinet required breaker overhaul. Smoke penetration and cleaning required in other cabinets.	
13	FEDB = 1030 Date = 05/24/95 Loc = Turbine building Ext. = Self-extinguished Duration = < 5 min Supp Time = N/A Not included in HEAF frequency	MCC	On May 24, 1995, at 12:49 p.m. Unit 2 was manually tripped from 100% power due to the lose of five out of six circulating water pumps (CWP) that resulted from a ground fault inside a non-safety-related motor control center (MCC). The root causes of this event were: (1) plant equipment improperly restored to service; and (2) the assessment of the potential risk to plant personnel and equipment safety was less than adequate. This event did not result in any significant nuclear or personnel safety consequences. Corrective actions included repair and restoration of the affected MCC, inspection of similar MCCs, strengthened expectations and work practices to increase personnel safety, reduced equipment hazards, and trip potentials.	Not enough information for developing a ZOI. No damage external to the MCC cubicle is reported.

Table M-1
Summary of the High-Energy Arcing Faults for Switchgears and Load Centers in the U.S. Nuclear Power Industry: 1979 through 2001 (Continued)

	Event	Initiating Electrical Component	Summary of the Event [1]	Notes on Zone of Influence
			At the time of the event, a plant Control Electrician was performing an independent pre-job walkdown evaluation (i.e., nonintrusive visual inspection) of a previously identified deficiency concerning missing mounting screws from a bus cover inside the back of MCC 208. The inner bus cover is secured in place with two bottom screws. He opened the main door on the back of Cubicle 14 (the rear of the cubicle has three entrances: a hinged door in the center, and outer cover plates at the top and bottom), looked into the upper section, and observed the inside bus cover plate out of its normal position, angled away from the bus bar. In order to get a clearer look at the inner cover plate, the Control Electrician retrieved a 4′ step-ladder, removed the upper cover plate, and set it on the floor. He climbed up the ladder (keeping his flashlight outside the cubicle) and looked into the upper section for about 10 seconds. He saw the inner cover plate start to shift, heard a loud explosion, and found himself standing on the floor. He was not injured. He was wearing a hard hat and safety glasses. The safety glasses aided in preventing a potential eye injury, which involved metal splatter from the resultant electrical arc. The Control Electrician contacted his Assistant General Supervisor (AGS) reporting his near miss incident and the electrical explosion at MCC 208. The AGS dispatched supervisory personnel to MCC 208 and informed the Control Room of the incident.	

Notes

1. The notes are based on additional information obtained from the plant in the form of internal plant fire event documentation (e.g., condition report) or/and communication with plant fire protection professionals.
2. This event is not included in the generic frequency calculation or the suppression curve because it occurred after the cutoff date of 12/31/2000.

M.4 Damage Characterization During the Energetic Phase (Zone of Influence)

The ZOI for HEAF events during the energetic phase is based on the reports mentioned above, particularly those events involving ensuing fires. The ZOI is intended to capture the damage generated by the energetic phase of a HEAF scenario.

M.4.1 General Room Heat Up

In general, the energy released from an energetic (or explosive) arcing fault does not contribute to considerable room heat-up. This energy can be estimated in a few ways. One of the more conservative methods is to multiply the operating voltage of the component (circuit breaker, switch, etc.) by the maximum available fault current, also multiplied by the duration of the energetic event. For example, if a 4160 V circuit breaker is located in a switchgear panel that coordination studies have shown to have a maximum available fault current of 5000 amperes, and the rapid disassembly of the circuit breaker occurs over a period of 100 ms, the conservative estimate of potential energy released to the compartment/room from the explosive failure of the breaker is conservatively estimated as

$$Q = (4160\ \text{V})*(5000\ \text{A})*(0.100\ \text{s}) = 2\ \text{MJ}.$$

The energy release determination calculated above is very conservative, in that it assumes the arc characteristics remain constant over the duration of the event, which is not likely to be the case. For example, in the method provided here, the arc voltage is assumed to be equal to the service voltage of the circuit breaker. However, the true voltage drop across the arc can be an order of magnitude or more lower than the operating voltage of the switchgear. The increase in compartment/room temperature from the energy released from the arcing fault is conservatively determined by assuming the volume of air in the room as a single body and calculating the expected temperature rise by

$$\Delta T = Q/(m_a \cdot C_p),$$

where m_a is the product of the mass density of the air in the compartment and the volume of the compartment, and C_p is specific heat capacity of air. Each of these quantities should be determined for the temperature and pressure conditions existing in the compartment immediately prior to the event. Thus, for the 2MJ energy deposition estimated above, the corresponding temperature increase of a 1000 cubic meter compartment will be

$$\Delta T = 2E6\ \text{J}/[(1000\ \text{m}^3)*(1.225\ \text{kg/m}^3)*(998\ \text{J/kg-K})] = 1.6\ \text{K}\ (1.6^\circ\ \text{C}).$$

The example calculation of room temperature rise due to the energetic phase of the HEAF event discussed above suggests that the temperature rise in the room is in the order of degrees C, and therefore negligible as a fire hazard. That is, the room will remain near its ambient temperature immediately after the arcing fault. As a result, any ensuing fire should be modeled in accordance with the approach provided in Task 11 and related appendices.

M.4.2 High Energy Zone of Influence

In the case of electrical cabinets of the type mentioned above, the fault is initiated as the result of electrical arcing either between one phase and ground, or phase-to-phase. The fault typically occurs on the feed side of the equipment (i.e., in the electrical sense, that side of the component where power feeds into the device rather than the output side of the device). Fire growth and damage for the arcing fault fire is characterized by the following features/assumptions.

- The initial arcing fault will cause destructive and unrecoverable failure of the faulting device, e.g., the feeder breaker cubicle, including the control and bus-bar sections.
- The next upstream over-current protection device in the power feed circuit leading to the initially faulting device will trip open, causing the loss of all components fed by that electrical bus. This fault may be recoverable if the initial faulting device can be isolated from the feeder circuit.
- The release of copper plasma and/or mechanical shock will cause the next directly adjoining/adjacent switchgear or load center cubicles within the same cabinet bank and in all directions (above, below, to the sides) to trip open.
  - If the first adjoining cabinet section is essentially empty, then the next adjoining cabinet section will be assumed to trip open (e.g., the central sections of a switchgear bank often include a cross-tie cabinet section that is essentially empty).
  - The cabinet or cabinet section in which the initial arcing fault occurs will be blown open by the initial energy release.
- The subsequent (or enduring) cabinet fire will continue to burn consistent with a fire intensity and severity described in Appendices E and G of the Detailed Fire Modeling procedure, respectively.
- Any unprotected cables that drop into the top of the panel in an open air-drop configuration will ignite.
  - Cables in conduit or in a fire wrap are considered protected in this context. In other words, if cables are protected (i.e., not exposed) by conduit or fire wrap, they are assumed damaged, but not ignited, and they do not contribute to the fire load.
  - Armored cables with an exposed plastic covering are considered unprotected in this context.
- Any unprotected cables in the *first* overhead cable tray will be ignited concurrent with the initial arcing fault provided that this first tray is within *5′* vertical distance of the top of the cabinet. The cable tray fire will propagate to additional trays consistent with the approach provided for the treatment of cable tray fires elsewhere in this document, assuming that the time to ignition of the first tray is zero rather than the normal 5 minutes.
  - This applies to any cable tray located directly above the panel.
  - This applies to any cable tray above the aisle way directly in front of, or behind, the faulting cabinet, provided some part of that tray is within 12" horizontally of the cabinet's front or rear face panel.
  - Cables in conduit or in a fire wrap are considered protected in this context.
  - Armored cables with an exposed plastic covering are considered unprotected in this context.

- Any vulnerable component or movable/operable structural element located within *3′* horizontally of either the front or rear panels/doors, and at or below the top of the faulting cabinet section, will suffer physical damage and functional failure.
  - This will *include* mobile/operable structural elements like fire dampers and fire doors.
  - This will *include* potentially vulnerable electrical or electromechanical components such as cables, transformers, ventilation fans, other cabinets, etc.
  - This will *exclude* fixed structural elements such as walls, floors, ceilings, and intact penetration seals.
  - This will *exclude* large components and purely mechanical components such as large pumps, valves, major piping, fire sprinkler piping, or other large piping (1" diameter or greater).
  - This may *include* small oil feed lines, instrument air piping, or other small piping (less than 1" diameter).
- Exposed cables, or other exposed flammable or combustible materials or transient fuel materials located within this same region (*3′*horizontally) will be ignited.

In the case of bus ducts, the following equipment should be assumed damaged and/or ignited.

- The entire length of the bus duct.
- Any cable (damage or ignition) or combustibles (ignition only) immediately adjacent to the bus duct.
- Equipment connected to the bus duct.
- If there are fire barriers along the length of the bus duct, these can be credited to limit damage and/or ignition. It may be assumed that the damage and/or ignition from a arcing fault in the bus duct is limited to one side of the fire barrier, except when analyzing multicompartment fire scenarios that account for failure of the fire barrier(s).

Figure M-1 is a pictorial depiction of the damage ZOI during the energetic phase of a HEAF for a switchgear or load center.

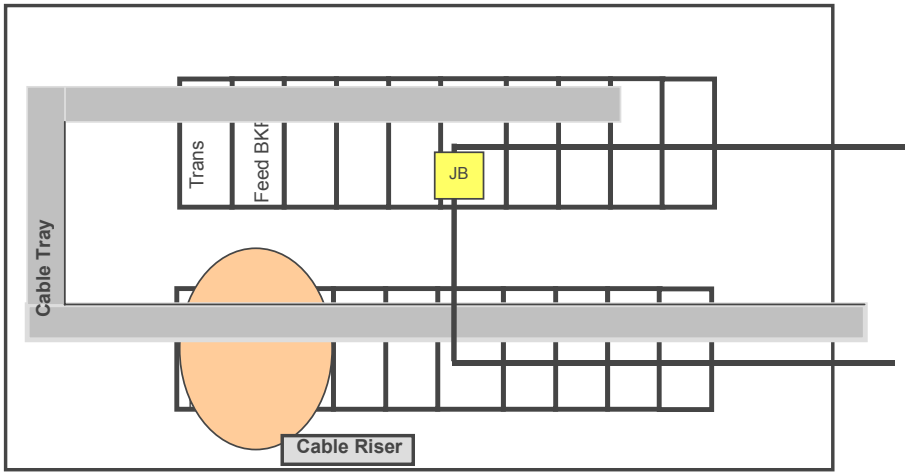

Figure M-1
ZOI for the Energetic Phase of a HEAF

M.5 Characterization of Detection/Suppression During the Energetic Phase

Suppression of a fire that begins with a HEAF introduces a number of unique challenges. The review of such events in the U.S. nuclear power industry, documented in Section M.2 of this appendix, lists some of these challenges.

The following approach may be used in crediting suppression involving HEAFs.

The energetic phase of such events occurs so fast that neither automatic nor manual suppression systems can prevent against damage and ignition within the ZOI (Section M.3).

- The amount of smoke from any damaging HEAF event expected to activate any smoke detection system in the area.
- Manual suppression by plant personnel and the fire brigade may be credited to control and prevent damage outside the initial ZOI from ensuing fires. Separate suppression curves are developed for these fires documented in Appendix P to the Fire Modeling procedure.

M.6 Modeling High-Energy Arcing Faults in the Fire PRA

The following steps are recommended when modeling a HEAF in a Fire PRA.

1. Identify the equipment in the room where a HEAF can be generated. As indicated earlier, this equipment includes, for the most part, 4160 V and 480 V switchgear cabinets, load centers, and bus bars.
2. Two types of initiating events should be postulated for each identified equipment:

    a. A HEAF event with an ensuing fire, and

    b. A regular equipment fire (no HEAF).

M.6.1 Risk Quantification of High-Arcing Fault Events

The two phases of the HEAF events should be analyzed as follows.

- For the energetic phase (Phase 1):
  - Assign a generic frequency for HEAFs listed in Task 6, and apportion it with the location and ignition source weighting factors to the equipment under analysis. Note that this frequency is calculated using events in which an ensuing fire was observed. Table M-1 indicates which events were included in the fire frequency.
  - Assume targets in the ZOI are damaged at time zero.
  - The probability of no manual suppression for the targets in the ZOI is 1.0.
  - The severity factor for a scenario consisting of targets in the ZOI only is 1.0. Note that the generic frequency was calculated using those events in which an ensuing fire was observed and there was immediate damage in the vicinity of the cabinet (ZOI).

- For the ensuing fire after the energetic phase (Phase 2):
  - Assign a generic frequency for HEAFs listed in Task 6, and apportion it with the location and ignition source weighting factors to the equipment under analysis.
  - The probability of no manual suppression for targets outside the ZOI can be calculated using the detection suppression event tree described in Appendix P, with the HEAF manual suppression curve.

In summary, the risk of a HEAF scenario can be estimated as:

$$CDF_i = \lambda_g \cdot W_L \cdot W_{is} \cdot P_{ns} \cdot ccdp_i ,$$

where:

λg = the generic frequency for HEAFs,

WL = the location weighting factor,

W_{is} = the ignition source weighting factor,

ccdp = the CCDP for a scenario including targets in the ZOI only,

P_{ns} = the probability of no suppression. If all targets are inside the ZOI, a value of 1.0 should be assumed. If there are postulated targets outside the ZOI, the probability of no suppression can be calculated following the approach provided in Appendix P using the manual suppression curve for HEAFs.

M.6.1.1 Example

Consider a HEAF scenario consisting of a switchgear cabinet affecting two targets. A stack of three cable trays is above the cabinet. The first tray in the stack is 3′ above the cabinet. It has been determined that one of the targets is in the first tray. The other target is in the third tray.

According to the approach on provided in Section M.3, the first target is assumed ignited at the time of the HEAF. The second target is damaged at time 7 minutes (4 minutes for fire propagation from the first to the second tray, and 3 minutes for fire propagation from the second to the third tray).

The CDF associated with a scenario involving damage only to the first target is calculated as $CDF_i = \lambda_g \cdot W_L \cdot W_{is} \cdot CCDP_i$, where the CCDP calculation assumes only the first target damaged. A CDF or a scenario involving the two targets damaged can be calculated as $CDF_i = \lambda_g \cdot W_L \cdot W_{is} \cdot P_{ns} \cdot CCDP_i$, where the probability of no suppression before damage to the second target is calculated as described in Appendix P and the CCDP calculation assumes both targets are damaged.

M.6.2 Risk Quantification of Regular Cabinet Fires

The quantification of scenarios involving regular fires (no high energy phase) in equipment that can produce HEAFs follows the process described in Tasks 6 and 11. The CDF is calculated as

$$CDF_i = \lambda_g \cdot W_L \cdot W_{is} \cdot SF \cdot P_{ns} \cdot CCDP_i,$$

where the severity factor and the probability of no suppression are calculated using the probability distribution for heat release rate and suppression curve developed for electrical cabinets.

M.7 References for Appendix M

M.1 J.W. McBride and P.M. Weaver, *Review of Arcing Phenomena in Low Voltage Current Limiting Circuit Breakers*, IEE Proc.-Sci. Meas. Technol., Vol. 148, No. 1, January 2001.

Appendix N

Appendix for Chapter 11, Hydrogen Fires

N
APPENDIX FOR CHAPTER 11, HYDROGEN FIRES

The fire modeling, i.e., estimating consequences of a fire, described in this document relies on empirical models for certain types of fire. One of these types involves hydrogen. This is mainly because typically used fire models (FIVE, FDT, CFAST, and MAGIC) are not well suited to evaluate the consequences of such fires. This appendix provides an approach for modeling hydrogen fire or explosion scenarios.

The discussions in this appendix are based on the assumption that the compartment or area of the plant where a hydrogen source has been identified could not be screened out, requiring some detailed analysis of the hydrogen fire and its consequences in terms of potential damage to the plant equipment needed for post-fire shutdown.

To perform a detailed analysis of fires and explosions involving hydrogen gas, the following steps may be followed:

- Hydrogen source characterization,
- Scenario postulation,
- Estimation of potential damage level, and
- Probability assessment of postulated scenarios.

Each element of this overall approach is discussed separately in Sections N.2 and N.3. Some background information on the characteristics of hydrogen, areas of typical nuclear power plants (NPPs) where hydrogen can be found, and hydrogen fire and explosion incidents that have occurred in the U.S. nuclear power industry are provided in Section N.1.

N.1 Background

Hydrogen is a colorless, odorless, tasteless gas and has no known toxic properties for humans. It is highly flammable and explosive, and burns with a colorless, invisible flame. Hydrogen may ignite when exposed to heat, flame, or oxidizers. The recommended approach to fight hydrogen fire is to stop the flow and extinguish the flame only when it is absolutely necessary [N.2]. Formation of a flammable gas cloud is the primary concern of this recommended fire fighting approach. Some relevant properties of hydrogen are summarized in Table N-1.

It is important to note that even though the auto-ignition temperature of hydrogen is relatively high (in relation to other flammable gases), one cannot conclude that the probability of ignition, in the absence of an ignition source, should be low. Catalytic effects of metals and other materials that may be present in the release area can lower the auto-ignition temperature significantly, leading to a high probability of ignition.

Table N-1
Some Properties of Hydrogen (Gleaned from [N-2 through N-4])

Parameter	Value[1]
Molecular weight	2.02
Specific gravity Gas Liquid	 0.07 (air=1) 0.07 (water=1)
Boiling temperature	-253°C
Freezing point	-259°C
Auto-ignition temperature	560°C
Flammability limits, volume % Lower Higher	 4.1% 74%
Heat of combustion	119,950 kJ/kg
Latent heat of vaporization	0.45 kJ/mole
Specific Heat Ratio	1.41
Critical Conditions Abs. Pressure Abs. Temp.	 13.0 bar 33.3°K

N.1.1 Hydrogen in Nuclear Power Plants

Pure or high-concentration hydrogen can be found in the following areas of a nuclear power plant:

- Main generator (hydrogen is used as a coolant),
- Volume Control Tank (VCT) of PWRs (hydrogen is used as a cover gas),
- Hydrogen water chemistry installation of some BWRs (hydrogen is fed into the system),
- Hydrogen storage tanks (main source of hydrogen gas to the various applications in a plant),
- Battery rooms (hydrogen may be released during battery charging process),
- Waste Gas System of PWRs, and
- Offgas Recombiner System of BWRs.

The quantity, concentration, temperature, pressure, and other conditions of hydrogen vary significantly among these applications or systems.

Hydrogen is delivered to a plant either in a bank of large horizontal cylinders fastened to a tractor-trailer that stays on site until empty, or in a tanker truck that unloads its cargo into a stationary vessel. Hydrogen is stored either as pressurized gas or as cryogenic liquid. In the latter case, an evaporator is used to generate hydrogen gas. Hydrogen gas is typically piped from the storage tanks to the main generator and other large users. Therefore, pressurized hydrogen piping may be found in a typical Turbine Building and sometimes in the Auxiliary Buildings of PWRs.

Hydrogen may be generated during battery charging process. Generally, the concentration of hydrogen would not reach its flammable or explosive level. However, as it is experienced in nuclear power and other industries, under abnormal conditions (e.g., improper venting or failure of mitigative equipment), an explosive mixture may be realized. Similarly, the waste gas system in PWRs and offgas system in BWRs may contain a sufficient amount of hydrogen to form, also under abnormal conditions, explosive mixtures.

N.1.2 Hydrogen Fire and Explosion Experience

A number of hydrogen fire and explosion events have occurred in U.S. NPPs. From a review of event descriptions provided in [N.1], the following observations were noted:

- Forty-four hydrogen fires and explosions occurred in the Offgas System of BWR plants in the U.S. Of these, 36 were labeled as challenging or undetermined events (see definition under Appendix C) with potential risk implications. The following comments regarding these events is in order.
  - There is considerable decline in the frequency of BWR Offgas System fires in the U.S. industry. Of the 36 events contributing to the frequency of such fires and explosions, 27, six, and three occurred in the 1970s, 1980s and 1980s, respectively.
  - Several BWR Offgas System explosions involved a wide range of damage and injury levels. Generally component failures or operational upsets led to such events.
  - Hydrogen leaks from BWR Offgas Systems were sufficient to cause an explosion and fire.
  - In a few cases, hydrogen explosion within a BWR Offgas System had sufficient energy to blow out doors and cause damage outside of system boundaries.
  - In one case, an event report indicated that the building was demolished.
  - When removing a sump cover, in one of the reported incidents related to a BWR Offgas System, a hydrogen explosion injured several people.
  - An explosion occurred in a valved-off part of the Offgas System because of a leaking isolation valve.
- Fourteen hydrogen fires involving the main generator were reported in the industry, 12 of which were labeled as challenging with one as undetermined.
  - Given the presence of hot surfaces nearby, it seems that, in several cases, hydrogen ignited upon release to the atmosphere.
  - In one case, hydrogen exploded and damaged the excitor housing, but not the excitor itself or the main generator.
  - Manual control of a drain tank level caused hydrogen gas to escape from the generator, which then ignited and caused a fire.
- Six fires were reported involving the hydrogen storage tanks. Three of these fires were labeled as challenging. All three fires occurred outdoors in hydrogen storage facilities, or tank farms.

  - Static electricity caused by the escaping hydrogen was suspected to be the cause of ignition for leaking hydrogen from a storage cylinder in the plant yard.
  - A hydrogen storage tank relief valve opened while a delivery truck was unloading into the tank. The hydrogen exploded and caught fire. Apparently, the relief valve failed to reseat. Plant personnel decided that the best course of action was to allow the fire to burn itself out.
- Battery-related hydrogen fires and explosions have also been reported.
  - An explosion was experienced inside two battery cells as a result of a mishap during a battery test.
  - A maintenance-free battery exploded because of hydrogen buildup inside it.
- Hydrogen found in the radwaste gas system has also led to explosions and fires. In one case, the gas exploded, broke open a bolted man-way, and released radioactive gas into the atmosphere.
- Hydrogen piping and related apparatus in the Auxiliary Buildings and Turbine Buildings have led to fires from events like coupling leaks, welding activity, or improper routing of the hydrogen gas (valving or spool connection errors).

N.2 Evaluation of Fires Involving Hydrogen

As in the case of some fire scenarios, where computer models may not provide the best alternative to determine fire growth and damage, in the case of hydrogen fires the options are (1) theoretical formulations supported by experiments, or (2) empirical models derived from historical evidence. The second approach is recommended, because of the weaknesses in the availability of the tests relevant to the type of hydrogen uses common to NPPs.

The fire initiation frequencies provided in Task 6 include the hydrogen-related categories (bins) listed in Table N-2.

Event descriptions leading to the frequencies presented in Task 6 provide important information about the types of scenarios and potential levels of damage that may typically be experienced in a hydrogen fire and explosion event. To fully benefit from the information contained in those event descriptions, the analysis of hydrogen fire and explosion scenarios is organized around these categories. For each unscreened compartment or plant area that includes hydrogen, the analyst should identify the hydrogen fire category according to the above list. In some cases, a quantitative screening analysis may have already been completed. In those cases, the fire initiation frequencies, and therefore the applicable categories associated with hydrogen, would already be established.

Table N-2
Fire Ignition Frequencies, From Task 6

Category	No. of Challenging/ Undetermined Events
Turbine/Generator–Hydrogen	13 (including one undetermined)
BWRs–Hydrogen Recombiner	36 (including 15 undetermined)
Plant-Wide Components–Hydrogen Tanks	4 (all challenging)
Plant-Wide Components–Miscellaneous Hydrogen Fires	8 (including five undetermined)

N.2.1 Turbine/Generator Hydrogen Fires

The fires in this category only apply to the turbine generator set, the excitor, and associated hydrogen cooling and supply system. It does not apply to the hydrogen piping or vent system, which are covered in the "Plant-Wide Components–Miscellaneous Hydrogen Fires" category. These fires are discussed in Appendix O, Turbine Generator Fires.

N.2.2 Boiling Water Reactors–Hydrogen Recombiner

Fire events in this category apply to the Recombiner Systems in BWRs. The impact of 90% of the events was limited to system internals and did not cause any damage to items outside. The remaining 10% of events reported some damage outside. Observations from these events are provided below.

- An explosion occurred while an elevated release point sump cover was being removed. One person received major burns while five others received some minor exposures.
- Due to a faulty flow indicator and buildup of ice inside system piping, an explosion occurred in the off-gas building from hydrogen buildup. The building was demolished.
- A hydrogen explosion led to a fire in the filter house. The fire was extinguished with no apparent structural damage to the filter house. However, the hatch cover hinges were bent from the explosion. It was suspected that hydrogen gas leaked from the system and ignited from an arc of a relay contact.
- The blast from an explosion in the off-gas recombiner blew out a door from the building and caused injury.

Since, generally, safety-related equipment and cables are not placed or routed near the recombiners, detailed analysis of recombiner explosion may not be necessary (i.e., no ZOI developed here). However, if such a need does arise, the analyst may start the analysis by adjusting the mean frequency to reflect events that had an effect outside the system (i.e., 10% of BWRs Hydrogen Recombine Frequency). Further probability reduction factors may be introduced based on the location of target equipment and cables with respect to the size of the system and other features such as areas where an explosion may be more likely than other areas of the system.

N.2.3 Plant-Wide Components–Hydrogen Tanks

Typically, plant hydrogen is supplied from storage tanks placed in the yard. The storage tanks may be located close to the Turbine Building or other plant structures. The hydrogen, as noted earlier in this appendix, may be stored as pressurized gas or as cryogenic liquid. In both cases, the storage tanks are maintained at a high pressure. All four events in the database involved a hydrogen leak from tanks that ignited almost immediately and formed a jet flame. Three of the tanks were located outdoors and one in a hydrogen storage area in the warehouse. Delayed ignition took place in none of the cases.

The objective of modeling fire scenarios involving hydrogen storage tanks is to estimate the probability of damage to target equipment and cables in the vicinity and damage to a structure that may lead to damaged safety-related equipment and cables.

The most severe of such events may be used to define a damage ZOI for fires involving outdoor hydrogen tanks.

Following is a summary of this event (LER: 333-99-001).

On January 14, 1999, at 12:56 hours, with the plant operating at 100 percent power, a fire was reported in the Hydrogen Storage Facility. The fire was reported to the control room by a non-licensed operator who saw the fire start after he had aligned valves at the hydrogen storage facility in preparation for putting the hydrogen injection system into service. The plant's fire brigade was dispatched and offsite fire fighting assistance was requested. Upon reaching the scene, the plant's fire brigade personnel reported seeing a *large volume hydrogen-fueled fire* in the vicinity of the hydrogen tube trailer unit. The heat of the fire potentially endangered the nearby hydrogen storage tanks. The plant fire brigade with offsite fire fighting support fought the fire until the hydrogen supply was exhausted and the fire was declared out approximately six hours later.

The most damage occurred inside the hydrogen control panel, the apparent location of the initial fire. The control panel doors were severely bent from the extreme heat and direct flame impingement. A series of tube banks run north/south on the concrete platform enclosure west of the control panel. Damage to the active bank adjacent to the control panel was severe, some due to direct flame impingement Damage dropped drastically further away from the control panel. A tube tank trailer was located directly south, within feet, of the active bank. The fire affected the end of the trailer. The damage in this area was caused by flame impingement and radiant heat from the south side of the control panel. A galvanized fence runs behind (east) the control panel. A hole was burned in the fence. The damage was caused by flame impingement resulting from rupture of an excess flow valve on the control panel release hydrogen in the direction of the fence.

Based on an interpretation of event description, fire events involving H2 storage tanks are recommended to assume damage to and ignition of combustibles within **10-15** ft of the tank or outer limits of the tank farm whichever is larger.

Another option is the use of analytical methods to analyze the following types of scenarios that may contribute to damage caused by a hydrogen tank fire:

- Jet flame (immediate ignition),
- Storage tank explosion, and
- Vapor cloud explosion (delayed ignition).

N.2.3.1 Jet Flame

Pressurized gas release from a small opening and immediate ignition would lead to jet flame[1]. Pressurized gas release may occur as a result of:

- A relief valve opening prematurely,
- A relief valve opening under excess pressure caused by an exposure fire or delivery truck driver error,
- Leaking valve packing, and
- Leaking flange leak.

Since most storage-tank-related fire events led to jet flame conditions, a large fraction of hydrogen storage tank fire frequency should be assigned to jet flame scenarios. However, since the adverse effects of a jet flame are limited to its flame hazard zone (see Section N.3.1 for a discussion on how to estimate the jet flame hazard zone), the analyst may assign a conditional probability to account for the orientation of the jet flame. In some cases, the orientation will be limited to the direction of the opening. For example, in the case of relief valves, the direction of the jet can easily be determined. To establish damage potential, one may conservatively assume that all structural elements, equipment, and cables within the flame hazard zone would fail.

N.2.3.2 Storage Tank Explosion

Storage tank explosions may occur because of an exposure fire augmented by relief valve failure to properly relieve the excess pressure. The latter may be experienced if the relief valve fails to open (e.g., an isolation valve upstream of the relief valve is closed[2]) or the intensity of an exposure fire overwhelms relief valve capacity. An exposure fire may occur in case of a vehicle fire (a vehicle parked very close to the tanks), equipment fire (only equipment that is installed close to the storage tanks), vegetation, fire or a transient combustible fire. In all cases, frequency of occurrence is very small. The frequency may be estimated based on plant-specific conditions and general industry data (if available).

Storage tank explosions, in addition to the shock wave, may throw projectiles in every direction. Although attempts have been made to estimate the size and energy of projectiles in an accidental explosion of vessels and rockets, the level of uncertainty in the results remains significant. Since the likelihood of an exposure fire leading to a storage tank explosion is deemed to be very small for all U.S. NPPs, it is recommended that a worst-case damage level be assumed for storage tank explosions.

---

[1] In case of delayed ignition, a vapor cloud explosion would occur first that would flashback to the source, leading to a jet flame. Vapor cloud explosions, should have a much larger hazard zone than a jet flame. Therefore, the formation of jet flame as a result of delayed ignition is not addressed here.

[2] It can be assumed that all spring-loaded relief valves may eventually open before tank pressure reaches its burst threshold.

N.2.3.3 Jet Vapor Cloud Explosion

A cloud of hydrogen formed by a release with no immediate ignition has the potential for exploding. Two conditions may be taken into account: (1) explosion in the open air outside the buildings, and (2) hydrogen migration into a building and explosion inside.

A review of the entire set of hydrogen fire events indicates that in a few cases, in addition to fire, an explosion took place as well, indicating accumulation of hydrogen gas and delayed ignition. In the case of hydrogen storage tank fire events, an explosion was reported in one of the four events. In that specific case, since there was no report of personnel injury or damage to surrounding equipment or structures, it was deemed that the resulting overpressure was small.

A vapor cloud explosion in the open (i.e., in the yard area) would lead to overpressure conditions impacting nearby structures. Section N.3.3 provides a discussion on how to estimate the overpressure level at a distance from the center of the gas cloud. The likelihood of occurrence of this scenario is deemed to be small because if ignition does not occur upon release, hydrogen gas would rise immediately. Based on a conservative interpretation of the event data, one of the four events (25%) involved delayed ignition.

There are generally no ignition sources directly above the storage tanks. A gas dispersion analysis may be conducted to estimate the concentration of the gas as it rises and pushes forward by the wind (for example, see [N.4] and [N.5]). The concentration contours obtained from dispersions analysis can be used to determine whether or not an ignition source will be engulfed by the gas cloud at a concentration greater than half[3] the lower flammability limit of hydrogen. If ignition is possible, the analyst may estimate the time for the gas to reach the ignition source. If the time is sufficiently long, the analyst may introduce the probability of isolating a hydrogen leak or other mitigative actions that may reduce the impact of explosion. Also, the probability of wind direction and atmospheric conditions that should be within a certain range (to make it possible for the gas cloud to reach the ignition source) may be included in the analysis.

In addition to vapor cloud explosion, the analyst may need to investigate the possibility of hydrogen gas being drawn into a ventilation system and igniting inside a building. A review of buildings and the location of their ventilation system intake openings may be conducted to establish the possibility of hydrogen intake into a building. If such a possibility exists, it is recommended to assume that ignition would occur at the worst position within the ventilation system and all equipment and cables within the affected compartments would be damaged. If this assumption leads to overly conservative results, the analyst may follow an approach similar to that described above for vapor cloud explosion in the open. The concentration of the hydrogen gas cloud at the ventilation intake point may be estimated using dispersion analysis. A ventilation system mixing ratio may also be included in the analysis to determine the conditions under which the lower flammability limit may be reached inside the ducts. Also, the position of possible ignition sources within the ventilation system and within building compartments may be considered to identify the position of the ignition point and compartments affected by an explosion.

---

[3] It is common to use half the LFL concentration to account for uncertainties and variations that may be experienced within a vapor cloud.

N.2.4 Plant-Wide Components–Miscellaneous Hydrogen Fires

This category of hydrogen fires covers the hydrogen carrying equipment, valves, and piping that are not part of the previous three categories. This category also includes the hydrogen piping inside the turbine building that carries hydrogen to the generator. Note that since this category may involve several compartments within the plant, the overall frequency of "miscellaneous hydrogen fires" needs to be partitioned to establish compartment-specific frequencies. The discussions provided in this appendix are based on the assumption that the partitioning has already been completed, and a specific compartment has not screened out in previous qualitative and quantitative screening steps requiring some level of detailed analysis.

There were eight fire events in the database [N.1] in this fire initiation category that involved the following (one other event was labeled as nonchallenging to risk and excluded).

- A hydrogen explosion took place inside the radwaste gas decay tank, causing failure of a bolted manway and some welds. This is the only fire event in this category that indicates an explosion (i.e., one of the eight events, about 10%) and had an impact beyond the initial source.
- A fitting on a hydrogen carrying tubing leaked and caught fire.
- Hydrogen escaped from a valve on an RCS gas processing system and caught fire.
- Venting hydrogen ignited and caught fire.

In none of the cases was a pipe break reported.

The following characterization of a hydrogen fire involving hydrogen pipes inside plant boundaries may be used based on these events.

- Assume loss of hydrogen supply to the destination point.
- Assume that 10% of the "Plant-wide-component/Miscellaneous hydrogen fires" may lead to a damaging fire. This is based on one of eight events that reported an explosion and external damage.
- In case of an isolated hydrogen leak, of the right mixture of hydrogen and air leading to a large fire, explosion, and damage to circuits and components cannot be precluded. It is expected that such conditions are more likely in smaller rooms. In compartments (excluding large, open areas inside a building; for example, Containment, Turbine Building, Reactor Building of a BWR, and Radwaste Building) assume room-wide damage. In larger volumes, use a 10 m ZOI as a conservative estimate. This is based on engineering judgment and supported, in part, by the fact that nothing near this range was reported in any of the eight fire events recorded in the U.S. industry.

Another alternative is to use analytical methods. In that case, the following scenario types may be considered:

- Jet flame,
- Explosion confined to the compartment of origin, and
- Multicompartment explosion.

Each scenario type is discussed below.

N.2.4.1 Jet Flame

The majority of the events (about 90%) are expected to be of this type. It can happen due to a pipe break, flange leak, valve connection leak, or any other small opening in the system. The analyst may review the equipment, piping, and valves within a compartment and postulate the most likely locations of such leaks. The damage zone of a jet flame is assumed to be limited to equipment and cables on one side of the release point within the distance defined by twice the flame length (see Section N.3.1).

N.2.4.2 Explosion Confined to the Compartment of Origin

About 10% of "miscellaneous hydrogen fires" involved an explosion are of this type. The analyst may need to partition this fraction between explosions confined to the compartment of origin and multicompartment explosions. The partitioning may be done by taking into account the possibility of hydrogen gas migrating to other parts of the plant via openings in the ceiling, ventilation ducts, and openings in the wall. For a single compartment explosion, it is recommended to assume that all equipment and cables within the compartment where explosion has occurred would fail. In the case of the Turbine Building, since the building could be much larger than the volume of the exploding vapor cloud, the analyst, similar to the approach described in Section N.3.3, may elect to apply vapor cloud explosion formulations to estimate the quantity of hydrogen needed to impart the postulated target damage.

N.2.4.3 Multicompartment Explosion

Multicompartment explosions may be analyzed as part of the multicompartment fire analysis task. For compartments where hydrogen equipment and piping are present, a review of the ventilation system characteristics and openings between compartments may be necessary to determine the possibility of hydrogen migration among adjacent compartment. Assuming that a set of interconnected compartments is identified as potentially risk-significant, the following steps may reduce the level of conservatism in damage frequency.

- Estimate the minimum hydrogen quantity needed to have explosive mixtures in every compartment or ventilation duct within the compartments;
- Estimate the length of time needed to release the minimum quantity into the affected compartments; and
- Conduct an analysis of equipment failure and human error probabilities to estimate the probability of failure to isolate the leak given the available time.

N.3 Modeling Hydrogen Fire and Explosion

Much is done in developing thermodynamic and empirical models for fires and explosions caused by flammable gases and the impact of such phenomena on it surroundings (e.g., see [N.2 to N.5]). However, these models are generally an approximation of the phenomena and include much uncertainty. In this section, a cursory review of simple models is provided for each phenomenon. The analyst may need to consult other sources if further detail is desired.

N.3.1 Jet Flame

Jet flame modeling, according to [N.5], is not well developed. Industry sources have attempted to model this phenomenon and provide simple formulations to estimate some of the key parameters. Reference [N.6] provides the following equation for the flame length of a momentum-dominated jet:

$$F_{len} = 1050\ (D_{jet} / C_{cl})\ (M_a / M_f)^{0.5},$$

where

F_{len} = flame length (m),

D_{jet} = jet diameter (m), assume the diameter of the hydrogen pipe,

C_{cl} = lean limit concentration (vol%), flammability limit for H2 is between 4.1-74%,

M_a = molecular weight of air (18 for air),

M_f = molecular weight of fuel (2.02 for H_2).

Reference [N.6] recommends the hazard zone to be defined as twice this length to include the thermal radiation effects of the flame.

To estimate the hazard zone of a jet flame, the above equation can be used to establish the radius from the release point. As a conservative measure, it is recommended that all equipment and cables within a half sphere centered at the release point are assumed to be affected.

N.3.2 Release Rate from a Pressurized Source

The release rate from a pressurized source depends on gas pressure at the point of release and size of opening. Reference [N.3] provides the following equation for mass release rate of gases:

$$Q_R = H_A\ P_t\ (T_t)^{-0.5}\ G_F,$$

where

Q_R = Release rate (lbs. per minute),

H_A = Hole or puncture area (square inches),

P_t = Source (hydrogen gas) pressure (psia),

T_t = Source (hydrogen gas) temperature (K), and

G_F = 5.034 (for hydrogen gas).

The release rate can be used to estimate the quantity of hydrogen released into the atmosphere over a given period of time or the time required to release a given quantity. In both cases, the opening size (i.e., hole or puncture area) needs to be postulated.

N.3.3 Vapor Cloud Explosion

Hydrogen leaks in the open atmosphere or in a very large volume (e.g., the Turbine Building) may form an explosive cloud. The damage caused by such an explosion has a mechanical impact on items in the path of the explosion and high temperature within the exploding cloud. TNT-equivalent mass is the simplest method used to estimate damage radius. The following equations are provided in Reference [N.6] for the distance X to overpressure O_p:

$$X = m_{TNT}^{1/3} \exp [3.5031 - 0.7241\ln(O_p) + 0.0398(\ln(op)^2]$$

$$m_{TNT} = 0.03\ m_{cloud}\ (\Delta H_C/1155),$$

where

X = Distance to given overpressure (ft),

m_{TNT} = TNT equivalent mass (lbs),

O_p = Peak overpressure at (psi),

ΔH_C = lower heat of combustion (kcal/kg),

m_{cloud} = mass in cloud of hydrogen (lbs).

For potential overpressure damage, the following information in Table N-3 is provided in [N.6].

Table N-3
Damage Characterization from Explosion Overpressure

Overpressure	Expected Damage
0.4	Some damage to house ceilings, 10% window glass breakage
0.7	Minor damage to house structures
1	Partial demolition of houses; made uninhabitable
2	Partial collapse of walls and roofs of houses
2.5	50% destruction of home brickwork
3	Steel frame building distorted and pulled away from foundation
4	Cladding of light industrial buildings ruptured
5	Wooded utility poles snapped
7	Loaded train wagons overturned
9	Loaded train box cars demolished

Similar to jet flame, one may conservatively assume that all items within the explosion's ZOI will also catch fire.

N.4 References

N.1 *Fire Event Database and Generic Ignition Frequency Model for U.S. Nuclear Power Plants*, EPRI, Palo Alto, CA: 2001. 1003111.

N.2 "Hydrogen," Material Safety Data Sheet, Air Liquide Corporation, http://www.airliquide.com/safety/msds/en/067A_AL_EN.pdf, Paris France, July 31, 2002.

N.3 "Risk Management Program Guidance for Offsite Consequence Analysis," U.S. Environmental Protection Agency, EPA 550-B-99-009, April 1999.

N.4 "Guidelines for Evaluating the Characteristics of Vapor Cloud Explosions, Flash Fires, BLEVEs," Center for Chemical Process Safety (CCPS), American Institute of Chemical Engineers, New York, New York, 1994.

N.5 "Guidelines for Chemical Process Quantitative Risk Analysis", Center for Chemical Process Safety (CCPS), American Institute of Chemical Engineers, New York, New York, 1989.

N.6 *Handbook of Chemical Hazard Analysis Procedures*, FEMA, 1990.

Appendix O

Appendix for Chapter 11, Turbine Generator Fires

O
APPENDIX FOR CHAPTER 11, TURBINE GENERATOR FIRES

A characterizing of the fire event is necessary for estimating consequences of fires involving the turbine generation. This characterization includes defining the fire size, severity, and duration of the fire event. This information is then used to determine consequence of such events using fire modeling tools as described in the main body of Chapter 11, or through definition of zone of influence (ZOI) (in this appendix) for scenarios where fire modeling tools are not appropriate, e.g., scenarios that may involve a combination of oil, hydrogen, and/or blade ejection.

O.1 Fire Events Involving Turbine-Generator System

Some of the most severe fires recorded in the nuclear power industry have involved the turbine-generators (T/G). The large quantity of turbine lubricating oil and hydrogen coolant in the generator, combined with the enormous rotational energy of the T/G are the primary reasons of the severe fire events experienced by the industry. The EPRI Fire Event Database (FEDB) [O.1] includes 40 fire event reports involving T/G that occurred during power operation. Of these fires, three are considered severe. Other severe T/G fire events have occurred at nuclear power plants (NPPs) worldwide that have some relevance to the fire risk in U.S. NPPs [O.2]. A brief synopsis of these events is provided in Table O-1.

Turbine blade failure leading to lube oil line rupture is the root cause of the most severe fires involving T/G (e.g., Salem, Vandellos, Maanshan, and Narora). In some cases, in addition to oil spill, hydrogen was released and contributed to the damage (e.g., Vandellos and Maanshan). Fort St. Vrain and Muhleberg involved a leak in the oil system that eventually led to a large fire. In two cases (Armenia and Chernobyl 2), the offsite power grid could not be disconnected from the main generators. Power back-feed into the generator caused bearing failure, lubricating oil spills, and fire in the turbine building.

These incidents illustrate that the consequences of a fire involving T/G can be substantial in terms of the number of equipment damaged and size of damage. It can also lead to heavy smoke generation and propagation to other areas, and can threaten structural integrity of the building itself. However, these events also illustrate that few of such fires could present a significant challenge to nuclear safety. For example, while the Vandellos fire caused extensive damage and ultimately led to permanent closure of the plant, the fire presented few nuclear safety challenges. In contrast, the Narora fire illustrates that T/G fires can, under different circumstances, present a severe challenge to nuclear safety.

Table O-1
Major Fires Involving T/G System in U.S. and International NPPs

Plant	Event Date	Duration	Comments
Rancho Seco (PWR, U.S.)	19-Mar-84	14 min	Equipment malfunction caused hydrogen leak into the turbine building and hydrogen explosion and fire. Even though the fire duration was short, there was extensive damage from the explosion and ensuing fire.
Fort St. Vrain (HTGR, U.S.)	3-Oct-87	16 min	Valve hydraulic oil system failure caused oil spray onto hot surfaces and fire. The fire dimension at its largest point was estimated to be about 19 sq. ft at its base and covered a 53′ by 35′ area 17′ above the base. Smoke migrated into the Control Room in this event.
Salem, Unit 2 (PWR, U.S.)	9-Nov-91	15 min	Equipment malfunction led to turbine over-speed and blade ejection. Seal failure led to hydrogen leak. Oil piping was severed. Both caught fire. Extent of fire damage was limited because of fixed suppression system activation and prompt fire brigade response.
Muhleberg (BWR, Switzerland)	21-Jun-71	2:07 hrs:min	Turbine oil leaked, caught fire on hot surfaces. The fire damaged cables, electrical equipment needed for safe operation, and structural elements of the Turbine Building. The fire caused smoke damage at areas adjacent to the Turbine Building.
Beloyarsk, Unit 2 (LWGR, Russia)	31-Dec-78	17:05 hrs:min	Lubrication oil piping failure released oil onto hot surfaces. The fire propagated to adjacent Control Building and caused extensive plant damage. Turbine building roof was damage extensively. The control room and cable spreading room were affected.
Armenia (VVER, Armenia)	15-Oct-82	6:05 hrs:min	The cascading events of a severe cable tunnel fire, augmented by equipment failure and operator error led to Turbine Building fire among many other damaging events that had a more severe effect on nuclear safety than the Turbine Building fire.

Table O-1
Major Fires Involving Turbine/Generator System in US and International NPPs (Continued)

Plant	Event Date	Duration	Comments
Maanshan (PWR, Taiwan)	1-Jul-85	10 hrs	A turbine blade ejection led to oil and hydrogen release. Both caught fire, leading to severe damage in the Turbine Building.
Vandellos (PWR, Spain)	19-Oct-89	3:51 hrs:min	A turbine blade ejection severed several turbine oil supply piping and release of hydrogen from the generator. Burning oil cascaded to lower elevations of the building and caused damage to the rubber expansion joint of a major water pipe, causing flooding of the lowest elevation of the Turbine Building and another adjacent building.
Chernobyl, Unit 2 (RBMK, Ukraine)	11-Oct-91	3:31 hrs:min	Grid backfeed into a tripped generator led to a severe fire that caused structural damage to the Turbine Building.
Narora (PWR, India)	31-Mar-93	1:30 hrs:min	Turbine blade ejection led to a severe oil fire that caused extended station blackout and control room abandonment (smoke effects).

O.2 Modeling Fires Involving Turbine-Generators

As a first step of T/G fire modeling, the analyst should decide whether scenarios that involve turbine blade ejection, which may include fire and explosion caused by oil piping failure and hydrogen release, would be analyzed as part of the Fire PRA or a separate external event topic. It may be assumed that scenarios involving blade ejection, as well as severe oil and hydrogen fires, are covered by the catastrophic T/G event defined below. The frequency is reflective of the potential for such events in U.S. nuclear power industry.

T/G fires, in the fire ignition frequency analysis, have been divided into three categories: excitor fires, hydrogen fires and explosions, and oil fires. Fire impact modeling should take into account these three categories and specific features of the T/G under study. From a review of the fire events, two severity levels were concluded: limited and severe. Limited fires affected items close to the ignition point. Severe fires affected a large area around and above the T/G. Conditional probabilities of the two severity levels were estimated from the fraction of fire events within each T/G fire category. Table O-2 lists the T/G categories, severity levels, and associated conditional probabilities.

O.2.1 Excitor Fires

Excitor fire events were found, in all cases, to be limited to the ignition source area or the excitor itself. Generally, the excitor is a separate device in the Turbine Building with no other equipment or cables nearby. Therefore, no attempt was made to estimate the conditional probability of a severe fire associated with the excitors. It is recommended to assume that excitor fires would have a damage zone limited to the excitor itself.

O.2.2 Hydrogen Fires

Of the 13 events in the FEDB [0.1] that were labeled as hydrogen fires originating from the T/Gs, two events (at Rancho Seco and Salem) were considered severe (Table O-1). In both cases, damage occurred from fire and explosion caused by hydrogen release from the generator and related equipment. In the case of small fires, the hazard zone of the hydrogen fire was limited to the leak area. In almost all cases, hydrogen leaked through the seals at the turbine or excitor side. In a few cases, hydrogen leaked from other points of the generator. In all the cases labeled as small fire, the extent of damage was limited to the area near the generator. Therefore, it is recommended that for small hydrogen fire event scenarios, the analysts assume the hazard zone of the fire is limited to a few feet away from the generator.

For severe fires, the analyst may assume that a severe fire may damage all those Fire PRA cables and equipment within the line of site of the generator and its bearings (above and below).

O.2.3 Oil Fires

Of the 20 T/G oil fires in the FEDB (challenging and undetermined), one event (at Ft. St. Vrain) was labeled as severe.

Table O-2
Fire Categories, Severity Level, and Conditional Probability

Categories	Severity	Conditional Probability[1]	Comments
Excitor	N/A	1	Fire can be assumed to be localized to the excitor area.
Hydrogen Fire	Limited	0.83	Fire affects an area close to the generator.
	Severe	0.17	Fire and explosion may occur with effects further away from the T/G.
			No widespread damage inside the building, potential damage to the adjoining buildings, or to the structural integrity of the building.
Oil fire	Limited	0.95	Fire affects an area near the turbines and oil carrying piping.
	Severe	0.05	A very severe fire may occur affecting structural elements and items away from the turbines. The ZOI should be estimated based on a 20′ oil spill (Ft. St. Vrain, 1987) at the most likely location of a leak.
			No widespread damage inside the building, potential damage to the adjoining buildings, or to the structural integrity of the building.
T/G fires involving H_2, oil, and possibly blade ejection	Catastrophic	0.025	Widespread damage inside the building, potential damage to the adjoining buildings, and to the structural integrity of the building.
		(5E-4/yr)	Suppression can prevent these consequences.
		(1E-5/yr)	

[1] Conditional probability given fire ignition

In case of the nonsevere fires, damage is assumed to be limited to the T/G systems and any components in the vicinity of the T/G. Using the information on Ft. St. Vrain event (Table O-1), damage in case of a severe T/G oil fire may be analyzed as an oil fire from a 20 ft^2 oil spill. This is equivalent of a 3-4 MW oil fire.

The analyst should consider the following possibilities when modeling T/G oil fires of such magnitude:

- Oil run down to lower elevations of the Turbine Building,
- Potential release of the entire contents of oil reservoirs because of the inherent features of the control elements of the oil pumping system,
- Possible structural failures above the oil fire, causing additional damage, and
- Migration of heavy smoke into the control room or other areas of the plant where operators may need to be present to achieve safe plant shutdown and core cooling.

O.2.4 Catastrophic Fires Involving T/G System

As evident from Table O-1, there have been few fires in the international experience that resulted in widespread damage within the Turbine Building, including a few that resulted in structural damage. These events involve a combination of turbine blade ejection, hydrogen, and oil fires. Domestically, only one event came close to involve all of these elements (Salem, 1991). This event caused minor damage due to existence of an automatic suppression system and prompt fire brigade response. This indicates that both automatic fire suppression systems and fire brigade should be credited to prevent catastrophic consequences observed internationally.

As a first, conservative step, the analyst may assume that the conditional probability of a T/G fire involving turbine blade ejection, hydrogen, and oil fires is 1 over 38 events (all challenging and undetermined T/G fires) or 0.025. With successful suppression, damage would be limited to the T/G system, as was the case in Salem. In case of failure of all suppression, automatic and manual, the analyst may assume loss all Fire PRA cables and equipment in the Turbine Building as a screening estimate.

O.3 References

O.1 *Fire Event Database and Generic Ignition Frequency Model for U.S. Nuclear Power Plants*, EPRI, Palo Alto, CA: 2001. 1003111.

O.2 *Risk Methods Insights Gained from Fire Incidents*, NUREG/CR-6738, August 2001.

Appendix P

Appendix for Chapter 11, Detection and Suppression Analysis

P
APPENDIX FOR CHAPTER 11, DETECTION AND SUPPRESSION ANALYSIS

The decision of crediting detection and suppression systems in a given fire scenario is usually based on the following considerations:

- It is suspected that time to detection and suppression is less than the calculated time to target damage obtained from modeling the scenario considering detection and suppression, and
- The detection and/or suppression system is designed, installed, and maintained according to applicable NFPA standards, or an evaluation from a fire protection engineer which indicates that the system will protect the selected target from fire-generated conditions.

Once the decision of crediting a fire protection system is made, the analyst should specify the type of system selected for the scenario. This includes:

- Fire detection: fire watch, smoke, heat detectors, or high sensitivity detection systems, and
- Fire suppression: fire watch, automatically or manually activated fixed systems, and fire brigade.

The detection and suppression features in a fire scenario are ultimately represented in the risk analysis as the probability of no suppression before target damage occurs. A method is provided on how to obtain this probability for the different detection-suppression options typically available in nuclear power plants using a detection-suppression event tree. An example application is discussed at the end of the appendix.

It is important to note that, in the context of fire PRA, fire suppression is considered to be successful if the fire is brought under control and so long as control is maintained. When a fire is kept under control, it does not grow any longer and no additional target items are affected. However, this does not necessarily mean that the fire would continue to burn ad-infinitum putting energy into its surroundings. All fires in nuclear power plants are eventually, completely extinguished before any widespread effect. This assertion is supported by the overall features of the power plants (i.e., compartmentalization and overall low combustible loading) and over 1400 fire event reports of varying magnitude. The focus of fire PRA is on damage to targets postulated for a specific fire PRA scenario. If those specific targets are damaged before fire control, or if fire control is lost for any reason, the detection and suppression effort is considered a failure. Therefore, the eventual extinguishment of the fire is not generally modeled for a fire PRA scenario.

P.1 Calculating the Probability of No Suppression

The probability of no suppression is calculated in four steps.

1. Identifying the fire protection features (detection and suppression) applicable to the scenario under analysis.
2. Determining the effectiveness of the credited detection-suppression system in controlling the fire before a given target is damaged. This analysis is based on code review, fire protection engineering judgment, and time to detection and damage calculations.
3. Solving the detection-suppression event tree, which provides the answer to the question of "how likely is the failure of fire detection and suppression to establish and maintain control of the fire before target damage in a given scenario."
4. Addressing dependency issues in the fire protection systems.

The following sections discuss these steps in detail.

P.1.1 Identification of Fire Protection Features

The analyst should select which fire protection features are applicable to the scenario under analysis. These features may include (but are not limited to):

- Detection Systems
  - Smoke detectors
  - Heat detectors
  - High sensitivity detectors
  - Fire watch
- Suppression Systems
  - Automatic sprinklers
  - Gaseous suppression systems (typically halon and CO_2)
  - Manual suppression, including fire watch and fire brigade

Plant documents and drawings describing the operation of credited systems may be necessary for completing future steps in the detection/suppression analysis.

P.1.2 Effectiveness of Fire Detection and Suppression Systems

The effectiveness of a fire detection and suppression systems in performing its intended functions is evaluated based on the following two considerations:

1. System design with respect to applicable code(s) of record and fire protection engineering judgment, and
2. The specific characteristics of the fire event in terms of time to target damage vs. time to suppression.

Although fire protection systems are usually designed in compliance with an applicable code of record, a fire scenario could be postulated in a way that a given system may not be effective due to geometrical configuration of combustibles. Fire protection engineering judgment is recommended for evaluating if a given system can control or suppress a postulated exposure.

Fire modeling can be used for calculating time to target damage and system activation calculations.

Manual suppression actions are also affected by the characteristics of every scenario in terms of tenability and accessibility to affected rooms. The effectiveness of manual actions is reflected in the risk analysis in terms of time. That is, how long the suppression operations are delayed due to fire generated conditions, accessibility to the room of fire origin, etc.

P.1.3 Solving the Detection-Suppression Event Tree

The event tree illustrated in Figure P-1 has been developed for modeling detection and suppression features credited in a given fire scenario. Table P-1 lists the outcome of each sequence. Analysts should provide proper justification for cases in which the event tree needs to be altered to address a specific scenario. The event tree has seven detection-suppression actions listed in three detection categories: prompt detection, automatic detection, and delayed detection.

Table P-1
Event Tree Outputs

Sequence	Detection	Suppression
A	Prompt detection by • Fire watch • Continuously occupied • High sensitivity detectors	Prompt suppression
B		Fire suppression by an automatically actuated fixed system
C		Fire suppression by a manually actuated fixed system
D		Fire suppression by the fire brigade
E		Fire damage to target items
F	Automatic detection by • Heat detectors • Smoke detectors	Fire suppression by an automatically actuated fixed system
G		Fire suppression by a manually actuated fixed system
H		Fire suppression by the fire brigade
I		Fire damage to target items
J	Delayed detection by • Roving fire watch • Control room verification	Fire suppression by an automatically actuated fixed system
K		Fire suppression by a manually actuated fixed system
L		Fire suppression by the fire brigade
M		Fire damage to target items
N	Fire damage to target items	

Prompt detection should be only credited when a continuous fire watch is assigned to an operation, or a high-sensitivity smoke detection system is installed. If in-cabinet smoke detection devices are installed in the electrical cabinet postulated as the ignition source, the analyst should assume that the fire will be detected in its incipient stage. This incipient stage is assumed to have a duration of 5 minutes. In order to account for these 5 minutes in the analysis, the analysts should add them to the time to target damage (or, equivalently, add them to the time available for suppression).

Prompt suppression can be credited following prompt detection in hot work fire scenarios only.

Automatic detection refers to cases where a smoke or heat detection system is available and reliable. Similar availability and reliability considerations apply to automatic suppression systems including water-based sprinklers, CO_2, Halon, etc. Note that at this point, automatic detection and suppression systems are effective for detecting and controlling the postulated fire.

The concept of delayed detection applies to scenarios in which no prompt or automatic detection is credited or automatic detection fails. Consider the following scenario as an example of delayed detection.

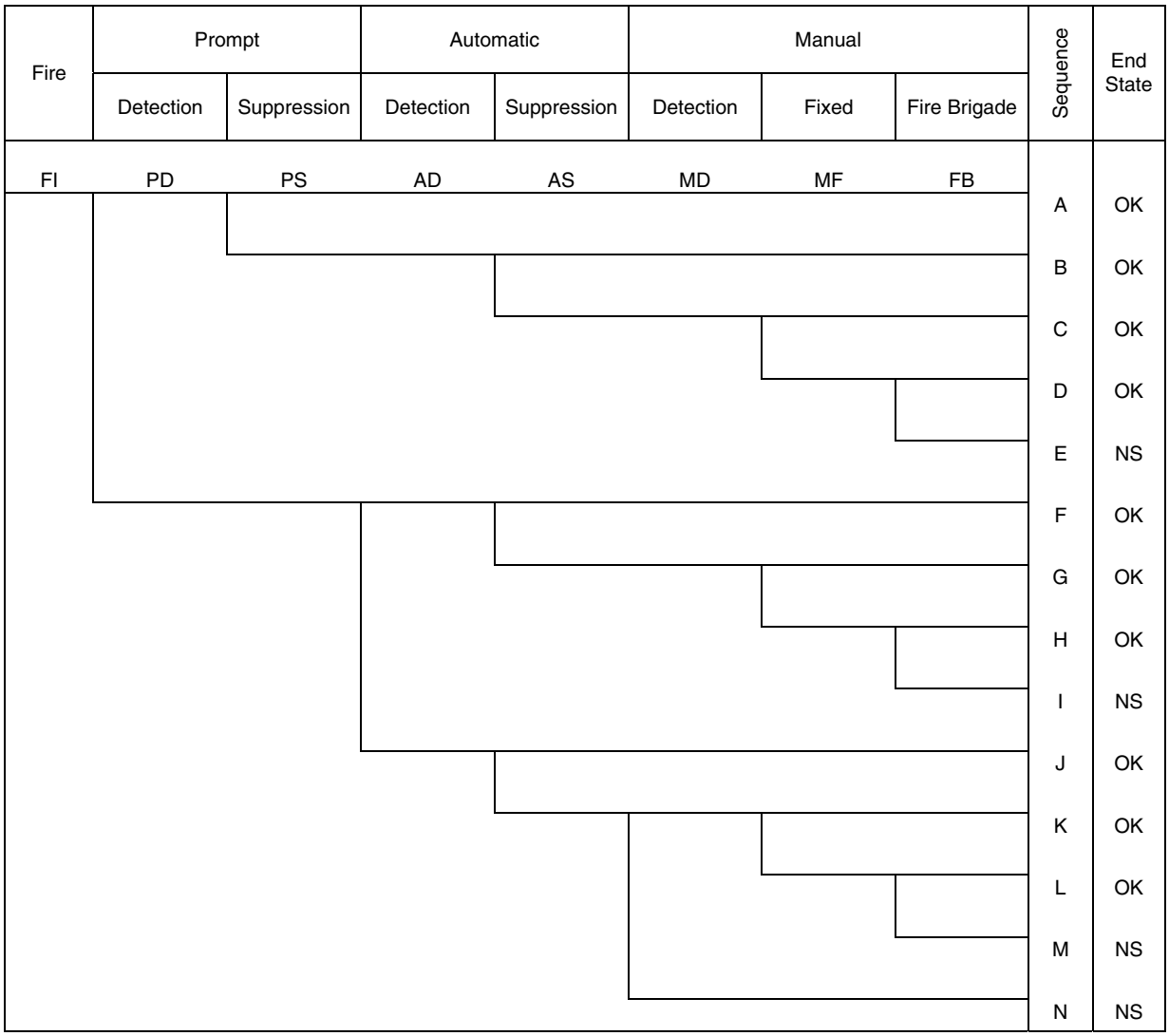

Figure P-1
Detection Suppression Event Tree
NS – Failure of suppression activities
OK – Success of suppression activities

The control room receives a failure signal on the board. An operator is dispatched to the compartment where the failure occurs. Upon arrival, the operator notices fire-generated conditions in the room and informs the control room of his findings. At this point, the control room dispatches the fire brigade.

Notice that in this example, the control room did not respond to a fire alarm, but to a signal related to an equipment failure.

Successful manual actuations of fixed fire suppression systems should include (1) plant personnel to accurately assess fire conditions in the compartment, and (2) the availability and reliability of the fixed system. That is, a human reliability analysis is necessary to determine the likelihood of a system being manually actuated by plant personnel, and an availability/reliability analysis similar to the one recommended for automatic fixed fire protection systems.

The fire brigade actions include the manual actuation of fixed systems, removal of fuel sources, and deenergizing systems, in addition to other manual suppression actions, like using portable fire extinguishers and hose streams.

The following values or calculations are recommended for determining the split fraction probabilities in the detection-suppression event tree.

- Pr(Prompt det): The probability of prompt detection can be assumed to have a value of 1.0 in cases where a continuous fire watch is present or in-cabinet detectors are credited. Note that the unreliability and unavailability of the in-cabinet detectors should be considered. Use a value of 0 for cases where automatic or delayed detection is credited.
- Pr(failure prompt supp): The probability of prompt suppression can be obtained using the welding suppression curve at the estimated time to target damage, since prompt detection assumes a negligible time to detection (or prompt detection). As mentioned earlier, prompt suppression should only be credited in hot-work fire scenarios. In scenarios where fires have propagated to secondary combustibles, requiring suppression actions beyond the fire watch, other suppression curves (transients, cables, oil, etc.) may be used, depending on the postulated fire.
- Pr(failure auto det): The probability of failure of smoke detector systems is assumed to be no larger than 0.05. This is the unreliability of halon suppression systems reported in NSAC 179L. For the purpose of this procedure, it is assumed that the unreliability of smoke detector systems is no worse than the recommended value for halon systems, because halon systems usually depends on a smoke detection signal for activation.
- Pr(failure auto supp): The probability of automatic suppression failure is the unreliability times the unavailability of the system (assuming it is effective). For the case of automatic suppression systems actuated by a signal from the smoke detectors, the probability of automatic detection failure should be also multiplied. NSAC 179L [P.1] recommends the following unreliability values for automatic systems:
  - Carbon dioxide = 0.04,
  - Halon systems = 0.05,
  - Wet pipe sprinkler systems = 0.02, and
  - Deluge or preaction sprinkler systems = 0.05.

- Pr(Delayed det): The probability of delayed detection is assumed 1.0 for cases where no prompt or automatic detection is credited.
- Pr(failure man act of fixed supp): The probability of failing to manually actuate a fixed fire protection system is calculated by summing the unreliability and unavailability of the system and the probability that an operator will not actuate the system. A human reliability analyst should calculate this last term.
- Pr(failure fire brigade): The probability of the fire brigade failing to suppress the fire is estimated with suppression probability curves developed using the suppression time reported FEDB. Fire events before 1/1/1981 were excluded from the manual suppression probability curves. This is the date when Appendix R of 10 CFR Part 50 was issued. The curves were developed using events where manual suppression was involved and suppression time information was available. Events including self-extinguished fires, supervised burnouts, and fires extinguished with automatic fire suppression systems were excluded from the curves. If the time to suppression was unavailable, the reported duration of the event was used instead. The following suppression probability curves are available.

1. Transients: A total of 24 transient events are considered. Twenty-two out of the 24 events were labeled as transient for the frequency model. The remaining two events were labeled as plant-wide components-dryers in the frequency model. These fires involved cloth or other transient combustibles on fire.
2. Welding: Welding events are usually labeled “Transient fires caused by welding and cutting,” or “Cable fires caused by welding and cutting.” This curve should be used for calculating the probability of prompt suppression.
3. Electrical: This data set contains events involving panels, electric motors, indoor transformers, and junction boxes, among other electrical equipment. Electrical events in the Control Room, Transformer Yard, and T/G Excitor bins were excluded. Note that events including overheated electrical equipment, such as bearings due to lack of lubricating oil, were included in this list. Finally, events labeled as high-energy arcing faults were not included in this curve.
4. Cable: The cable category refers to cables in raceways. Extension cord-related fires were included in the Transient data set. Events describing wiring or cable fires inside cabinets or other electrical equipment were included in the electrical data set. Records with insufficient details, simply reporting a “cable/wiring” fire, were included in this cable data set.
5. Oil: The oil data set includes all the events in which a lubricating substance was ignited.
6. Flammable gas: This data set includes only events involving hydrogen fires. Fires and explosions in the Off-Gas/H2 Recombiner are also included.
7. Transformer yard: This data set includes events labeled as Transformer Yard. As mentioned above, events suppressed by fixed fire suppression system only were excluded. Events in which the fire brigade decided to let the fire burn out were also excluded from the set.

8. Containment PWR: A separate curve is developed for the Containment PWR at power operation. It is considered that fire brigade access to the building in the event of a fire is relatively different than other locations in the plant. Events in this data set include all the ignition source bins in the Containment (PWR) location.
9. Control room: Events in this bin are the ones labeled Control Room/Electrical Cabinets. This curve was developed using the total event duration instead of the time to suppression.
10. Turbine Generator: Events in this set include the ones labeled as T/G Oil, T/G Hydrogen, and T/G Excitor. Some of the T/G Hydrogen events were excluded from the data set because they were suppressed with an automatic system.
11. High-energy arcing faults: Includes events labeled as high-energy arcing faults.
12. All events: This data set includes all events that were not considered as "prompt suppression" cases. The purpose of this data set is to generate a generic suppression time probability curve that may be used for those cases where the analyst cannot find a proper match from the above list of categories.

The data for analysis consists of reported fire durations in commercial U.S. NPPs. These times are treated as being generated by an underlying probabilistic model. The final output of interest is the suppression curve, which gives the probability that a fire lasts longer than a specified time. If T is the random variable describing when the fire is suppressed, and $\lambda(t)$ is the rate at which the fire is suppressed (possibly time-dependent), this probability of non-suppression is given by

$$\Pr(T > t) = \exp(-\int_0^t \lambda(s)ds).$$

In this equation, $\lambda(t)$ is a function of the parameters of the probabilistic model chosen for T. The simplest model for T is the exponential distribution, whose probability density function is

$$f(t) = \lambda e^{-\lambda t}.$$

In this model, λ is estimated directly and is not a function of time, giving

$$\Pr(T > t) = e^{-\lambda t}.$$

The probability of no suppression is calculated using the equation above, usually selecting t as the time to target damage. The uncertainty in λ gives rise to a corresponding uncertainty in the suppression probability. This will be expressed graphically by showing a mean suppression curve, along with lower and upper bound curves. Tables E-2 and E-3 list the estimated λ for each suppression curve and the numerical results for each curve as a function of time. The curves are plotted in Figures P-2 and P-3.

Table P-2
Probability Distribution for Rate of Fires Suppressed per Unit Time, λ

Suppression Curve	Number of Events in Curve	Total Duration	λ Mean	5th Per	50th Per	95th Per
T/G fires	21	749	0.03	0.02	0.03	0.04
Control room	6	18	0.33	0.15	0.32	0.58
PWR containment	3	23	0.13	0.04	0.12	0.27
Outdoor transformers	14	373	0.04	0.02	0.04	0.06
Flammable gas	5	195	0.03	0.01	0.02	0.05
Oil fires	36	404	0.09	0.07	0.09	0.11
Cable fires	4	11	0.36	0.12	0.33	0.70
Electrical fires	112	937	0.12	0.10	0.12	0.14
Welding fires	19	99	0.19	0.13	0.19	0.27
Transient fires	24	199	0.12	0.08	0.12	0.16
High energy arcing faults	5	118	0.04	0.02	0.04	0.08

P.1.4 Using the Manual Suppression Probability Curves

The manual suppression probability curves described in the previous section represent the suppression time of applicable fire events. As such, the curves do not account for the time to detection and the response time of the fire brigade. The time available for manual suppression is

$$t_{ms} = t_{dam} - t_{fb} - t_{\det},$$

where t_{ms} is the time available for manual suppression, t_{dam} is the time to target damage, t_{fb} is the response time of the fire brigade, and t_{det} is the time to detection.

The time available for manual suppression, t_{ms}, is the input time to the manual suppression probability curves. Recall that for the case of electrical cabinet fires, if in-cabinet smoke detectors are installed in the cabinet postulated as the ignition source, the analyst should add 5 minutes to the time available for detection.

Table P-3
Numerical Results for Suppression Curves

Time (min)	T/G fires	High energy arcing faults	Outdoor transformers	Flammable gas	Oil fires	Electrical fires	Transient fires	PWR containment	Welding	Control room	Cable fires	All fires
0	1.0	1.0	1.0	1.0	1.0	1.0	1.0	1.0	1.0	1.0	1.0	1.0
5	0.869	0.809	0.829	0.880	0.640	0.550	0.547	0.521	0.383	0.189	0.162	0.675
10	0.756	0.655	0.687	0.774	0.410	0.303	0.299	0.271	0.147	0.036	0.026	0.455
15	0.657	0.530	0.569	0.681	0.263	0.166	0.164	0.141	0.056	0.007	0.004	0.307
20	0.571	0.429	0.472	0.599	0.168	0.092	0.090	0.074	0.022	0.001	*	0.207
25	0.496	0.347	0.391	0.527	0.108	0.050	0.049	0.038	0.008	*	*	0.140
30	0.431	0.280	0.324	0.463	0.069	0.028	0.027	0.020	0.003	*	*	0.094
35	0.375	0.227	0.269	0.408	0.044	0.015	0.015	0.010	0.001	*	*	0.064
40	0.326	0.184	0.223	0.359	0.028	0.008	0.008	0.005	*	*	*	0.043
45	0.283	0.149	0.185	0.315	0.018	0.005	0.004	0.003	*	*	*	0.029
50	0.246	0.120	0.153	0.277	0.012	0.003	0.002	0.001	*	*	*	0.020
55	0.214	0.097	0.127	0.244	0.007	0.001	0.001	*	*	*	*	0.013
60	0.186	0.079	0.105	0.215	0.005	*	*	*	*	*	*	0.009
65	0.162	0.064	0.087	0.189	0.003	*	*	*	*	*	*	0.006
70	0.140	0.052	0.072	0.166	0.002	*	*	*	*	*	*	0.004
75	0.122	0.042	0.060	0.146	0.001	*	*	*	*	*	*	0.003
80	0.106	0.034	0.050	0.129	*	*	*	*	*	*	*	0.002
85	0.092	0.027	0.041	0.113	*	*	*	*	*	*	*	0.001
90	0.080	0.022	0.034	0.099	*	*	*	*	*	*	*	*
95	0.070	0.018	0.028	0.088	*	*	*	*	*	*	*	*
100	0.061	0.014	0.023	0.077	*	*	*	*	*	*	*	*

* A value of 1E-3 is recommended

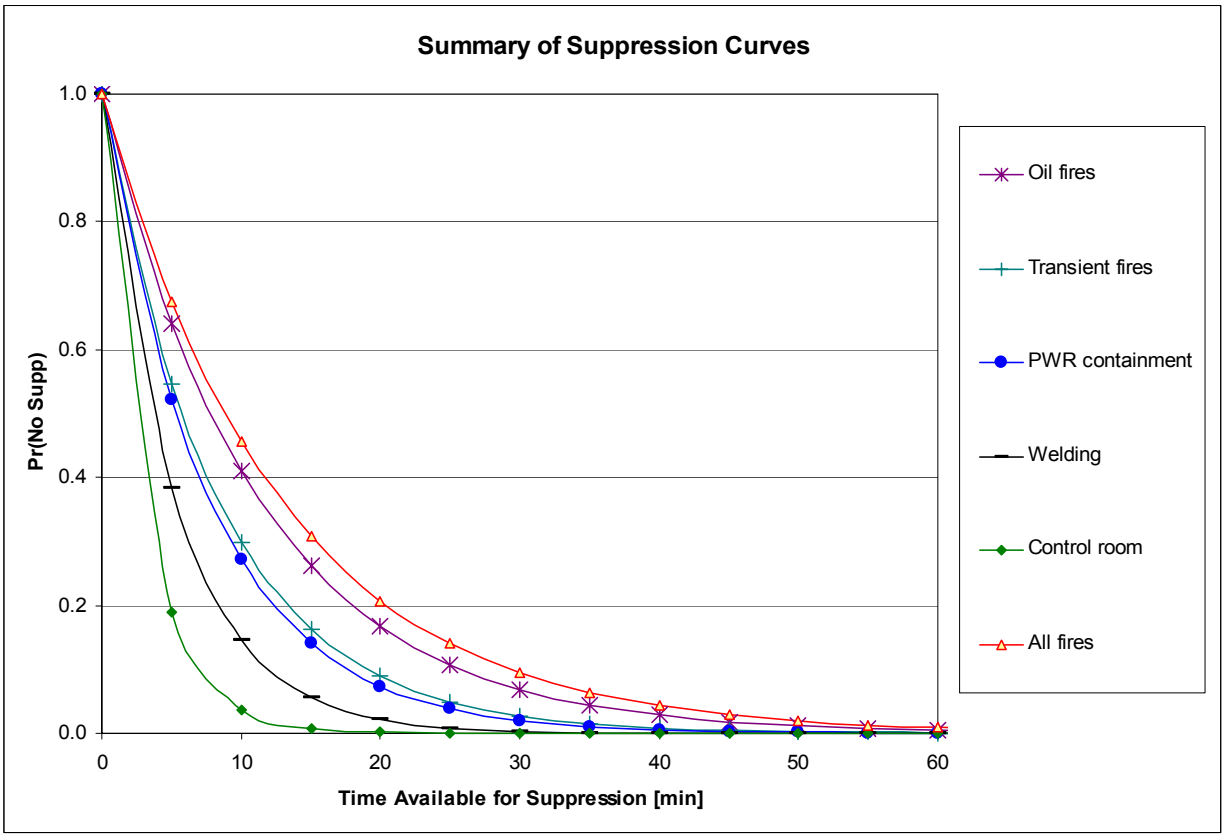

Figure P-2
Summary of Suppression Curves

P.1.5 Additional Information on Recommended Probability Values

Reliability and Availability Values for Automatic Fire Protection Systems: NSAC-179L [P-1] includes an evaluation of automatic suppression system data for application to nuclear plants. The data indicates the following unreliability values:

Table P-4
Unreliability of Fixed Fire Suppression Systems

System Type	Unreliability of System
Wet Pipe Sprinkler	2.0E-2
Preaction Sprinkler	5.0E-2
Deluge Sprinkler	5.0E-2
CO_2	4.0E-2
Halon	5.0E-2

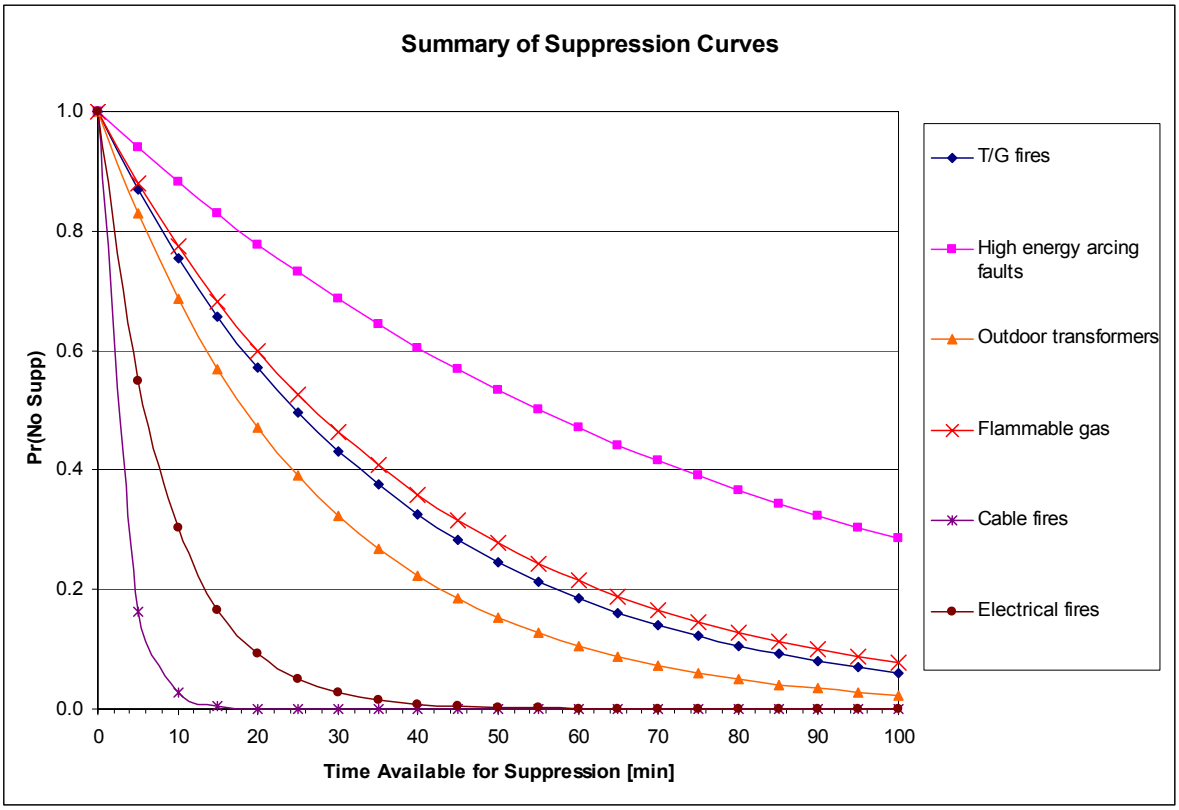

Figure P-3
Summary of Suppression Curves

These values provide realistic estimates of system unreliability. However, the estimates do not include:

- maintenance contributions to unavailability,
- credit for manual actuation of the system,
- dependent failures, and
- plant specific data.

Unavailability values are plant-specific. The values should be calculated using plant-specific impairment data. As mentioned earlier, unavailability of an item is the ratio of the time it is not operating over a total or calendar time. This ratio can be interpreted as the probability that an item will not be operational at a given time.

The factors affecting the time the system is not operating (down time) include:

- maintenance operations: routing or corrective maintenance,
- inspection operations,
- random failures and/or failures due to dependencies on supporting systems, and
- actuations due to fire.

Each of these actions may be associated with a down time. The analyst should add the down times and divide by the period of analysis. The period of analysis should long enough to capture the majority of the situations forcing the system to be down. A period at least longer than a routine maintenance cycle is recommended. The following model can be used to estimate unavailability:

$$U = \frac{t_{d-\text{maint}} + t_{d-insp} + t_{d-failures} + t_{d-fire}}{T},$$

where T is the total period of analysis, and t_d is the respective down time for the factors listed above. The availability is the compliment of the unavailability or (1-U).

Note: Availability (and unavailability) values calculated as described above may or may not include the effects of the unreliability of the system, depending on the down times accounted for in the calculation. If, for example, down times associated with random failures at the time of a fire are included in the calculation, the unreliability of the system unnecessary.

P.1.6 Dependency Analysis

The following provides a general approach for evaluating dependencies in fire protection systems. A generic fault tree is provided to assist in the analysis. That fault tree contains data values and references to appropriate portions of the plant's IPE methods and results. The EPRI Fire PRA method does not provide a prescriptive approach on this topic because the Fire PRA team is best advised to analyze dependencies in a manner consistent with the approach taken in the IPE. Selected examples are provided to illustrate the general process.

The overall reliability for individual plant fire protection systems was determined in NSAC-179L to be high. When redundant systems are considered as a whole, however, the analyst sometimes identifies common elements. Failure of a common element may not be significant to an individual system's reliability, but it might be very significant to the failure of more than one fire protection capability. Therefore, it is important to evaluate the impact that such dependencies, or common elements, have on the overall reliability of suppression.

The best example of a dependency is the fire protection control panel for a gaseous suppression system. That panel detects a fire, actuates automatic suppression, and closes a damper. Consequently, if certain circuits in the panel fail, both automatic detection and suppression might fail. If other circuits fail to close the damper, suppression may be ineffective and a fire barrier may fail. While the individual circuit failures are unlikely (especially since the panels are designed to continuously indicate if trouble exist), the results could be significant to a fire risk estimate.

The EPRI Fire PRA method evaluates dependencies in fire protection systems by focusing on the common element, namely suppression. The following dependencies in suppression analysis could be important:

- between automatic detection and suppression,
- between actuated barriers and automatic suppression,
- between safe shutdown capability and automatic suppression, and
- between manual and automatic suppression.

The first two types were illustrated above. The second two types are best illustrated using the firefighting water system as an example. Plant IPEs sometimes credit firefighting water for core injection, heat removal, or secondary heat removal. At many plants, EOPs identify under what conditions plant operators should attempt to align firefighting water to the vessel, an isolation condenser, or the steam generators.

A dependency analysis is necessary if:

- credit has been taken in the IPE for these uses of firefighting water,
- that action applies to the compartment, and
- an automatic water suppression system is the compartment or use of manual hose stations is credited.

The first step in the analysis is to determine if firefighting water can serve each function simultaneously. This may require an evaluation of total system flows. Even if a fully functional firefighting water system can succeed, under certain conditions, such as a single operating fire pump, the system may be incapable.

Next, if the system is incapable under any condition, a human reliability analysis may be necessary to determine the feasibility and reliability of operator actions to manage the system for both system uses. A quick review of procedures or discussion with operators may allow using a simple conservative assumption. If more detailed analysis is necessary, the analyst should consider whether other Fire PRA techniques are more efficient, e.g., more detailed fire modeling.

The third step in the analysis is to evaluate dependencies in the hardware portion of the system. If fault tree analyses were available for the firefighting water system in the IPE, they may serve as a valuable source of information for this evaluation.

P.1.7 The Probability of No Suppression

The probability of no suppression is calculated summing the probabilities of Sequences E, I, M and N in the detection/suppression event tree. These three branches (or sequences) represent scenarios where the fire is not suppressed by the fire brigade. Notice that the probability assigned to the fire brigade refers to failure to suppress the fire at a given time, and is obtained from the manual suppression curves.

P.2 Example

In this example, the probability of no suppression for a fire scenario in an emergency switchgear room during power operation is calculated. The room is equipped with a smoke detection system and a manually activated gaseous suppression system. The scenario consists of an MCC fire affecting a cable tray away from the ignition source, and, therefore, is expected to be affected by smoke layer temperatures. The following information is necessary before proceeding with the analysis.

- Based on fire modeling analysis, the estimated time for smoke detection is 1 minute.
- Based on fire modeling analysis, the estimated time to target damage is 15 minutes.
- From fire drills records, the brigade response time is 7 min.
- From fire drills records and plant procedures, it is estimated that the time to manually activate the gaseous system is 10 minutes.

Figure P-4 illustrates the solution of the detection and suppression event tree. Notice that Sequences A to E have a value of 0.0 because the first event is prompt detection, which is not credited in this scenario.

The first credited system for Sequences F to I is automatic detection, which has a failure probability of 0.05. The probability of failure to activate the gaseous system on time is 0.15. This value is estimated as the sum of the probability of human error activating the system and the unreliability of the system (assumed as 0.1 and 0.05, respectively, for this example). The probability of failure for the fire brigade is calculated using the electrical suppression curve at time 15-1-7 = 7 minutes as EXP ($-\lambda_{electrical}$ .t) = EXP (-0.12x7) =0.43.

If the automatic detection fails, delayed detection is credited. Sequences J to N refer to this situation. Assuming a time to delayed detection of 15 min, the fire brigade has no time to suppress the fire before target damage.

According to Section P.1.5, the probability of no suppression is the sum of Sequences E, I, M and N, which is 0.0 + 6.1E-2 + 8.0E-3 + 0.0 = 6.9E-2.

P.3 References

P.1 W. Parkinson, et al, Automatic and Manual Suppression Reliability Data for Nuclear Power Plant Fire Risk Analyses, NSAC-179L, February 1994.

Fire	Prompt		Automatic		Manual			Sequence	End State	Pr(non-suppression)
	Detection	Suppression	Detection	Suppression	Detection	Fixed	Fire Brigade			
FI	PD	PS	AD	AS	MD	MF	FB			
1.0	0.0	0.0						A	OK	
		1.0		0.0				B	OK	
				1.0		0.85		C	OK	
						0.15	0.62	D	OK	
							0.38	E	NS	0.0E-00
	1.0		0.95	0.0				F	OK	
				1.0		0.85		G	OK	
						0.15	0.57	H	OK	
							0.43	I	NS	6.1E-02
			0.05	0.0				J	OK	
				1.0	1.0	0.85		K	OK	
						0.16	0.0	L	OK	
							1.0	M	NS	8.0E-03
					0.0			N	NS	0.0E-00
									Total	6.9E-02

Figure P-4
Solution of the Detection-Suppression Event Tree for Example in Section P-2
NS – Failure of suppression activities
OK – Success of suppression activities

Appendix Q

Appendix for Chapter 11, Passive Fire Protection Features

Q
APPENDIX FOR CHAPTER 11, PASSIVE FIRE PROTECTION FEATURES

In contrast with fire detection and suppression activities, which involve active efforts for detecting, controlling, and suppressing fires by manual or automatic means, passive fire protection refers to fixed features put in place for reducing or preventing fire propagation. Such features include coatings, cable tray barriers, fire stops, dampers, penetration seals, doors, and walls. State-of-the-art fire modeling tools offer limited capabilities for modeling the effectiveness of these features, particularly if the equipment is in a degraded condition. For example, effectiveness of a fire wall could be evaluated. However, effectiveness of the same fire wall with cracks or unsealed penetrations could not.

In addition to analytical models, experimental observations can provide insights on the performance of passive fire protection systems under fire conditions. For cases in which no analytical or empirical tool can adequately estimate the system performance, purely probabilistic techniques could be formulated.

Seven types of passive fire protection features are discussed in this appendix: doors, walls, coatings, cable tray barriers, fire stops, dampers, and penetrations seals. The method in which each feature is credited in the PRA depends on the fire scenario and the available modeling.

In this appendix, the techniques relevant to fire PRA analysis in the commercial nuclear industry are described. The passive fire protection features listed above are generally classified in this appendix according to a modeling technique. However, this classification should not limit the analysts to the recommended technique for a given feature.

Q.1 Analytical Modeling of Passive Fire Protection Features

Analytical modeling refers to the use of fire modeling tools for evaluating the effectiveness of barriers. Theoretically, the temperature rise in materials can be estimated as a function of time if its thermophysical properties, orientation, and the incident heat flux are known. The process of calculating this temperature rise can be divided in two steps that are coupled together: a fire modeling analysis for estimating incident heat flux, and a heat transfer analysis for estimating temperature within the thickness of the material. The incident heat flux would be the boundary condition that changes as a function of time as the fire develops.

Estimating fire-induced incident heat fluxes is relatively simple. State-of-the-art zone and field models are capable of estimating incident heat fluxes in different locations in the compartment. Hand calculations also provide very good heat flux estimates, provided that the location of the target relative to the fire is known.

On the other hand, estimating the temperature of a material subjected to an incident heat flux is more challenging. Although there are highly sophisticated analytical techniques for addressing this problem, the biggest challenge in nuclear power plant applications is in obtaining accurate thermophysical properties for the material. Provided that those properties are known, analysts can obtain them from rather conservative surface temperature approximations using hand calculations to detailed temperature profiles as a function of time and length within the material.

In practice, doors and walls are the passive fire protection features whose effectiveness could be evaluated with analytical tools. Thermophysical properties for concrete and steel are usually readily available. The most common application of fire modeling tools to evaluate the effectiveness of doors and walls would be (1) calculating the surface and internal temperature of the door and wall, and (2) analyzing the effects of the wall or door in preventing smoke migration through rooms.

Modeling degraded doors or walls depends on the type of degradation that needs to be evaluated. Consider the following situations.

1. A particular fire rating of a door or wall in question—a three-hour vs. a two-hour wall, for example. Given postulated fires of different intensities and locations, zone or field models can be used to estimate temperature profiles within the wall as a function of time. With this information, fire protection engineers can determine if the wall can provide the necessary compartmentation.
2. A fire door may remain open or can be opened during a fire event. In this case, zone and field models can be used to determine smoke flows through doors as a function of time, and locations where the smoke will migrate. Models may not be effective at predicting flame spread through openings.
3. Cracks are found in a wall, or a penetration is not appropriately sealed. Fire models may not be used for these cases. Although small openings could be modeled in doors and walls, fire models would only consider them when estimating temperature in the room and smoke flow through them. Temperature increases in the wall due to cracks will not be estimated.
4. A gap between a fire door and wall of a particular size is found. Zone and field models are appropriate if the goal of the analysis is to predict smoke migration though openings. As mentioned above, openings of any size and orientation can be described within surfaces. Models may not be effective at predicting flame spread through openings.

Q.2 Empirical Modeling of Passive Fire Protection Features

The two passive fire protection features that can be credited using purely experimental results are coatings and cable tray barriers, including fire stops.

Q.2.1 Coatings

SNL performed tests to evaluate the effects of cable coatings in:

- reducing the flammability of cable material,
- preventing or delaying the spread of fire, and
- preventing fire-induced cable failures.

Thirty-three full-scale tests were performed using trays loaded with either qualified or nonqualified cables. The cable tray configurations included both a single cable tray and a two-tray stack. Exposure fires included either a gas burner or a diesel fuel pool fire.

Five coatings were evaluated; however, because the names of manufacturers were withheld, use of the data is limited. Flammability was evaluated by measuring time to ignition, time to maximum heat release rate, and cumulative heat release at various times after initiation of the exposure fire.

The diesel fuel pool fire was selected for use by the EPRI Fire PRA. The diesel fuel pool exposure fire was more intense, and therefore, conservative. More importantly, aspects of the gas burner tests were less representative of conditions typical of the most likely ignition sources. A barrier was placed between the two trays during the gas burner test, thereby preventing exposure of both trays.

The gas burner operated five minutes 'on' and five minutes 'off,' whereas the diesel fuel pool fire burned continuously for approximately 13 minutes. Consequently, the diesel fuel fire tests are indicative of the actual response of a coated two-tray stack to a relatively severe exposure fire that bounds the heat release rate for most ignition sources found in an area containing important cables. The results of those tests are presented in Table Q-1.

For application in the EPRI Fire method, assume coated, nonqualified cables will not ignite for at least 12 minutes, and coated, nonqualified cables will not be damaged for at least 3 minutes for large exposure fires, and for cable tray fires, more likely about 10 minutes.

Table Q-1
Summary of Principal Two-Tray Diesel Fuel Fire Cable Fire. Retardant Coatings Tests Involving Nonrated 3-Conductor Cables

Coating	Time to Ignition (min)	Time to Damage (min)
Lower Tray Response		
A	13	10
B	13	6
C	12	3
E	No	10
G	12	11
Upper Tray Response		
A	No	11
B	No	11
C	12	7
E	No	19
G	12	11

Q.2.2 Cable Tray Barriers and Fire Stops

Cable tray fire barrier tests were also performed by SNL. Thirteen tests were conducted in a manner identical to that used in the single tray and two-tray gas burner cable coating tests. The same cable types and the same gas burner exposure fire sources were used. Six potential fire barrier systems were tested:

1. Ceramic wool blanket wrap,
2. Solid tray bottom covers,
3. Solid tray top cover with no vents,
4. Solid tray bottom cover with vented top cover,
5. One-inch insulating barrier between cable trays, and
6. Fire stops.

The barrier test findings are as follows. Propagation of the fire to the second tray was prevented in each case. That is, each barrier prevented ignition of a cable tray when exposed to a cable tray fire in a lower tray. Barriers seem to substantially delay cable damage for qualified cable. However, the barriers did not delay cable damage for nonqualified cable. For application to the EPRI Fire PRA, the barrier test findings are considered most appropriate to exposure fires with smaller heat release rates and to cable trays in a stack threatened by fires in lower trays. In these cases, each barrier prevents cable tray ignition until well after the fire brigade reaches the scene (i.e., greater than 20 minutes), and damage in *qualified* cable with solid tray bottom covers until well after the fire brigade reaches the scene.

Q.3 Probabilistic Modeling of Passive Fire Protection Features

Dampers and penetration seals are passive fire protection features that may need probabilistic treatment in the Fire PRA. Recall that probabilistic approaches are used for crediting important aspects of fire scenarios that cannot be analytically described.

Q.3.1 Dampers

Fire and/or smoke dampers are commonly found in commercial nuclear plants in ventilation ducts and wall penetrations. Typically, they are listed for fire applications. However, the effectiveness of a damper in a given fire scenario may not be determined solely in its capacity to survive intense heat or prevent smoke or flame from propagating to adjacent locations, but in its availability/unavailability. This is, the probability that the damper will be fully functional and operate accordingly to its intended function. In that perspective, dampers are assumed effective if they are available.

Dampers are inspected on a regular basis in commercial nuclear plants. From inspection records, analysts may be able to obtain average unavailability values. Analysts, for example, can review records from the last *n* number of inspections, then divide the number of dampers found not operating by the total number of inspected dampers. This calculated probability would apply to all dampers credited in fire scenarios. If a damper is credited in a fire scenario, this average availability/unavailability can be used in an event tree sequence similar to the one described in Appendix P for calculating the probability of target damage.

Q.3.2 Penetration Seals

The approach for modeling penetration seals is similar to the one discussed above for dampers. This is, nuclear plants inspect a certain number of penetrations seals every few months. Typical findings from these inspections may include degraded seals and new penetrations with no seal. If seals are assumed effective when installed and maintained appropriately, the results of the inspections could be used to develop a failure probability of the seal.

Appendix R

Appendix for Chapter 11, Cable Fires

R
APPENDIX FOR CHAPTER 11, CABLE FIRES

Cables are probably the most common combustible in nuclear power plants. In a postulated fire scenario, they can be an ignition source, intervening combustible, and/or part of the target set. This appendix describes technical approaches to model cable fires, as well as cable response to fire conditions according to the scope of a selected fire scenario.

To date, no generalized analytical theory is available to accurately model fires in all possible configurations in commercial nuclear plants. Most of the information compiled for this appendix is in the form of flammability parameters derived from experiments or correlations also developed from experimental data. Therefore, the analytical methods described are limited to conditions similar to experimental setups.

Cable flammability and thermo-physical properties obtained from tests sponsored by individual plants may also be used for estimating fire intensity, flame spread and generated fire conditions.

R.1 Background Information

Cables in commercial nuclear plants can be broadly classified as unqualified or IEEE-383 qualified (or qualified cable). Unqualified cable usually has PE/PVC (polyethylene/polyvinyl chloride) insulation. Qualified cable, on the other hand, refers to cables types that pass the IEEE-383 flammability test. In the IEEE-383 fire test, a 1′ wide, 8′ high vertical rack supports the cables. The cables are positioned in the center six inches of the rack and spaced one-half cable diameter apart. A 10″ burner fuel with an air-propane mixture ignites the cable with a 21 kW fire. The burner is positioned 2′ above the floor. Nine to 12″ of cable are exposed to the direct flames for 20 minutes. Cables on which flame extends above the top of the 8′ rack fail this test.

Cables in nuclear power plants are usually located in either single tray or stack of trays. Single cable trays can have vertical, horizontal, or diagonal orientations. Similar orientations apply to cable tray stacks. Furthermore, some cable tray arrangements are a combination of horizontal, vertical, and diagonal trays.

The amount of experimental evidence and analytical tools available to model cable tray fires is, as expected, relatively small when compared to the vast number of possible fire scenarios involving cable trays that could be postulated across the entire U.S. commercial nuclear industry. In most cases, the scenario will need simplifications in order to use available modeling methods. The challenge to fire-modeling analysts is selecting and describing scenarios that can be modeled without compromising the technical validity of the results in representing the fire conditions.

R.2 Cable Tray Ignition

The first step in analyzing cable fires is determining cable ignition.

- If trays are stacked, calculate the flame height, plume temperature, and heat flux at the height of the above tray. Assume ignition of the above tray if it is immersed in flames, or the plume temperature or heat flux are higher than the levels required for ignition. Models for flame height, plume temperature, and heat flux are available in Five-Rev1 (EPRI-1002981). Figure R-1 provides a conceptual representation of the recommended analysis. Notice how the cable tray stack is immersed in the fire plume. If the plume heat fluxes can ignite the first tray, the evaluation process continues until the number of trays involved can be determined.

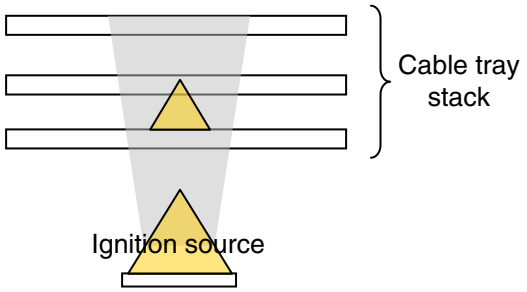

Figure R-1
Ignition Evaluation of a Cable Tray Stack

- If trays are affected by an unobstructed ceiling jet, correlations for ceiling jet temperature and heat flux available in Five-Rev1 can be use to determine ignition. Figure R-2 illustrates a scenario involving trays exposed to ceiling jet flows.

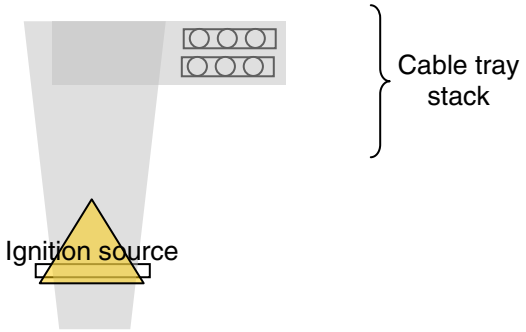

Figure R-2
Ignition Evaluation of a Cable Tray Stack in the Ceiling Jet

- If trays are adjacent, ignition could occur by flame radiation. Calculate the radiated heat flux from the flames to the adjacent tray and compare it with the critical heat flux of the cables. Assume ignition if the calculated heat flux is higher than the critical heat flux. A model for flame radiation is available in Five-Rev1 (EPRI-1002981). Figure R-3 provides a conceptual representation of the recommended analysis. Notice how in this illustration, the first tray is affected by direct flame radiation.

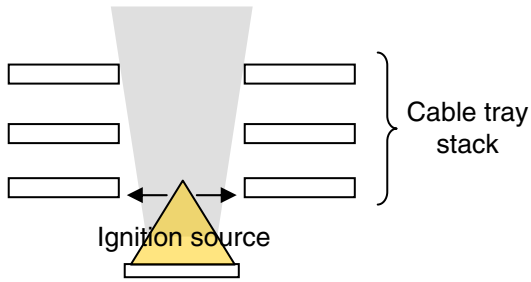

Figure R-3
Ignition Evaluation of Adjacent Cable Trays

- Cable trays immersed in the hot gas layer (relatively far from the ignition source) can be damaged or ignited if the gas temperature reaches the damage or ignition temperature respectively. Three analytical options are available to calculate hot gas layer temperature:
- Hand calculations: two empirical models are available in FIVE-Rev1 for calculating hot gas layer temperature; one for naturally ventilated rooms, and one for mechanically ventilated rooms. Hand calculations only provide an average room temperature, due to the energy added to the room by the fire.
- Zone models: MAGIC and CFAST are the two state-of-the-art zone models with capabilities for calculating smoke layer position, temperature, and oxygen concentration as a function of time. Notice that zone model analyses allow the analyst to determine if a tray is immersed in smoke; if the smoke temperature is high enough to cause damage to the cables; and if there is enough oxygen in the smoke to support a cable fire.
- Field models: Field models will provide similar output variables as zone models. However, field models can evaluate complex geometries and offer detailed spatial results. Field models analyses are recommended when the selected scenario presents characteristics that can't be addressed by zone models, or the level of detail in the output variables is important. For example, the analyst may be interested in the temperature of one section of the room, instead of an overall average temperature.

R.3 Heat Release Rate from Cable Tray Fires

A correlation for estimating the heat release rate generated by a burning cable tray is available in the fire protection literature.

$$\dot{Q}_{ct} = 0.45 \cdot \dot{q}_{bs} \cdot A \text{ (kW)}$$

In this correlation, q_{bs} is an experimental bench scale HRR value (kW/m^2), and A is the burning area of the tray.

Table R-1 lists q_{bs} values. If the cable under analysis is not listed in Table R-1, analysts should select the highest bench scale heat release rate.

The burning area is usually calculated assuming the width of the tray times the burning length.

Table R-1
Bench Scale HRR Values, q_{bs}

Material	Bench Scale HRR [kW/m^2]
XPE/FRXPE	475
XPE/Neoprene	354
XPE/Neoprene	302
XPE/XPE	178
PE/PVC	395
PE/PVC	359
PE/PVC	312
PE/PVC	589
PE, Nylon/PVC, Nylon	231
PE, Nylon/PVC, Nylon	218

R.4 Flame Spread and Fire Propagation

A distinction is made between flame spread and fire propagation in this appendix. This distinction is necessary due to the different methods available for modeling fire growth in cable trays. Flame spread refers specifically to a flame from progressing along the length of a single cable tray. Fire propagation refers to a fire involving different cable trays as it continues to grow.

With this distinction, the different models available for predicting flame spread and fire propagation between cable trays are described.

R.4.1 Flame Spread

Flame spread occurs in trays of any orientation. In general, it can be estimated by dividing the fuel distance heated by the flames by the time to ignition. Mathematically, this is represented as [R.1]:

$$v = \frac{4\left(\dot{q}''_f\right)^2 \delta_f}{\pi\left(k\rho c\right)\left(T_{ig} - T_{amb}\right)^2} ,$$

where

$\dot{q}''_f$ = the incident heat flux from flames to the fuel surface [kW/m^2],

δ_f = the heated fuel distance [m],

$k\rho c$ = the thermal inertial of the fuel [(kW/m^{2}K)^{2}s], and

T_{ig} = the ignition temperature of the fuel [°C].

For the case of vertical flame spread, δ_f can be assumed the length of the flame. Experimental measurements suggest that the incident heat flux from flames to a vertical fuel is around 20 to 30 kW/m^2.

For the case of horizontal flame spread, δ_f may be in the order of 1 to 2 mm. However, the heat flux from flames may be in the order of 70 kW/m^2.

R.4.1.1 Material Properties

The material properties for PVC cables are [R.2]:

$K = 0.000192$ kW/m K

$\rho = 1380$ kg/m^3

$C_p = 1.289$ kJ/kg K

$T_{ig} = 218°C$

The material properties for XPL cables are [R.2]:

$K = 0.000235$ kW/m K

$\rho = 1375$ kg/m^3

$C_p = 1.390$ kJ/kg K

$T_{ig} = 330°C$

R.4.1.2 Recommended Values

- Vertical flame spread: Consider a single vertical cable tray ignited at the bottom. Assuming a flame of 0.6 m (~ 2′) and an incident heat flux of 30 kW/m^2.
  - Flame spread for PVC cable = 25 mm/sec (~5′/min)
  - Flame spread for XPL cable = 8 mm/sec (~1.5′/min)
- Horizontal flame spread (or vertical flame spread downward): Consider a single vertical cable tray ignited at the bottom. Assume a heating distance of 2 mm and an incident heat flux of 70 kW/m^2.
  - Flame spread for PVC cable = 0.9 mm/sec (~0.2′/min)
  - Flame spread for XPL cable = 0.3 mm/sec (~0.05′/min)
- Flame spread along a diagonal cable tray: For fires spreading upwards, it is expected that the flame spread rate will increase as the angle between the floor and a horizontal cable tray increases to 90 degrees (vertical orientation). As a conservative estimate, assume the tray is in a vertical position.
- No flame spread can be assumed for armored cables with themo-set insulation and no coating.

Note: Assumptions for flame spread calculations do not consider developing five conditions in the room. Flame spread rates may increase if five conditions in the room deteriorate.

R.4.2 Fire Propagation

A correlation for estimating the heat release rate generated by burning cable trays is available in the fire protection literature. This correlation is based on experimental results only and should be used with caution. Notice that the equation for estimating heat release rate is identical to the one discussed above at t = 0 min.

$$\dot{Q}_{ct} = 0.45 \cdot \dot{q}_{bs} \cdot A(t) \text{ (kW)}$$

$$A(t) = A_o + \frac{dA}{dt} t \text{ (m}^2\text{)}$$

$$\frac{dA}{dt} \approx 5 \cdot 10^{-3} \dot{q}_{bs} - 0.6. \text{ (m}^2\text{)}$$

This fire propagation model (second and third equation, above) should not be used for a single cable tray. It only applies to stack of trays subjected to a constant heat release rate from the ignition source, since the experimental measurements the area of fire involvement in all trays. The experiments consisted of two parallel stacks of six horizontal cable trays on a load cell using a pan of heptane as the ignition source between the two stacks. The stacks were 6” apart. Three of the 17 tests had an arrangement of three vertical cable trays in addition to the 12 horizontal ones. The 96” × 10” × 3” deep cable trays had a vertical separation of around 10”. The mass loss rate from the cable trays was measured during the experiments. In addition, the estimated area of the fire involvement in the trays at the time of extinguishment was also reported. The data collected from these experiments was correlated with bench scale HRR data. The following references provide further technical details on the model and the experiments [R.3]. Input parameters were:

- A_o: Initial cable tray burning area (m^2),
- t: Time (min), and
- q_{bs}: Experimental bench scale HRR value (kW/m2). q_{bs} values are listed in Table R-1. If the cable under analysis is not listed in Table P-1, analysts should select the highest bench scale heat release rate.

For a cable tray ignited by a fire below, the initial cable tray burning area can be assumed as the base area of the fire. Finally, fires should be located on top of the cable trays.

An alternative empirical model for upward fire propagation in a cable tray stack assumes the angle for horizontal spread from tray level to tray level is 35 degrees to either side. The assumption of the 35 degree angle of fire propagation is based on results from a fire test involving 14 filled horizontal cable trays in a two-tray-wide by seven-tray-high array. Cable trays were filled with 3-conductor XPE cable. These 14 cable trays were separated by 8″

horizontally and by 10.5″ vertically. A 5-minute exposure to one of the lowest trays produced a fully developed fire within that tray. During this 5-minute period, a barrier was used to shield the remaining trays from the fire. The ignition source was then extinguished and the barrier removed. The fire eventually propagated through the cable trays.

It was determined, using infrared thermography, that the fire grew primarily in an upward direction, spreading horizontally only as it progressed from level to level. The rate of fire spread was observed to accelerate as the fire progressed. The angle of this spread was determined to be around 35 degrees. Figure R-4 illustrates this model.

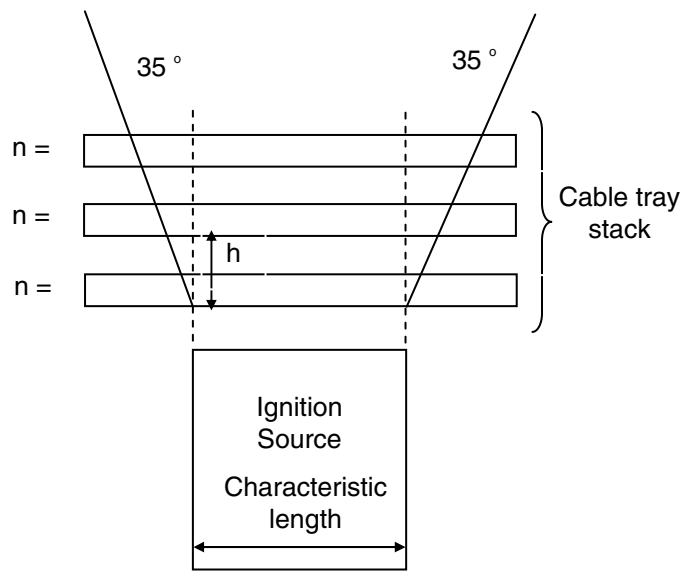

Figure R-4
Model for Fire Propagation in a Cable Tray Stack

R.4.2.1 Heat Release Rate

The lowest tray in the stack has a burning area of the characteristic length of the fire base times the cable tray width. Cable trays in U.S. NPPs are typically 2′ to 3′ wide. The characteristic length of the fire depends on the ignition source. If the ignition source below the trays is an electrical cabinet, the characteristic length will be the cabinet's length. For pool fires, such as oil spills, the spill diameter can be selected as the characteristic length. Once the burning length of the lowest tray has been determined, the length of the trays above is calculated using the following equation:

$$L_{n+1} = L_n + 2\left(h_{n+1} Tan\left(35^o\right)\right),$$

where L is length, n is the cable tray index, and h is the tray elevation measured from the bottom of the lowest tray (See Figure R-3). Again, the burning area is L times the tray width. The heat release rate generated from each tray can be calculated as discussed above using $\dot{Q}_{ct} = 0.45 \cdot \dot{q}_{bs} \cdot A$, where A is the burning area.

R.4.2.2 Timing

The exposed tray on the first level was observed to be burning intensely, though in a very localized region, after the 5-minute burning exposure. Within approximately 5 minutes of the barrier's removal, the second and third trays appeared to be involved in the fire. The fourth-level trays were involved around 10 minutes after the removal of the barrier. The sixth-level trays were involved in approximately 18 minutes.

For modeling purposes, analysts should assume that the:

- first tray above the ignition source will be ignited in 5 minutes,
- second tray will ignite 4 minutes after the first tray,
- third tray will ignite 3 minutes after the second,
- the fourth tray will ignite 2 minutes after the third, and
- the fifth tray will ignite 1 minutes after the fourth.

For example, damage to a fifth tray or above in a stack subjected to a fire would occur in approximately 15 minutes of exposure.

The above model intends to capture the growing and accelerating nature of fires. Analysts should determine if the first tray will be ignited using fire modeling tools. In high-energy arcing fault scenarios, ignition of the first tray will occur immediately after the blast if the tray is within the ZOI described in Appendix F.

R.5 References

R.1 Quintiere, J. "Surface Flame Spread". SFPE Handbook of Fire Protection Engineering, Third Ed. Chapter 2-12.

R.2 Taylor, R.E., Groot, H., and Ferrier, J., Thermophysical Properties of PVC, PE and Marinite, Thermophysical Properties Research Laboratory, Inc., West Lafayette, IN, Report TPRL 2958, 16 pp., April 2003.

R.3 Lee, B. T. "Heat Release Rate Characteristics of Some Combustible Fuel Sources in Nuclear Power Plants" National Bureau of Standards NBS 85-3195. July 1985.

Appendix S

Appendix for Chapter 11, Fire Propagation to Adjacent Cabinets

S
APPENDIX FOR CHAPTER 11, FIRE PROPAGATION TO ADJACENT CABINETS

Fire models were not designed to apply to all types of fires propagation and damage scenarios. A particularly important scenario that fits this category is the effect of an electrical cabinet fire on adjacent cabinets. However, electrical cabinet fire tests conducted at SNL (NUREG 4527) offer some insights regarding (1) fire propagation between cabinets, and (2) fire-induced damage in adjacent cabinets. In this appendix, these fire tests are evaluated and specific recommendation are provided for their evaluation.

Note: This appendix applies to vertical cabinets only.

S.1 Fire Propagation to Adjacent Cabinets

Fires may either damage or, possibly, propagate to adjacent cabinets. With regard to fire propagation, some limited, but important insights can be drawn from the fire tests.

1. Fire spread to an adjacent cabinet was prevented if the cabinets were separated by a double wall with an air gap.
2. Fire spread was delayed by 15 minutes, even when there was no internal barrier between the cabinets.

In Case 2, the cabinet design was such that hot gases collected in a plenum area at the top of the cabinet. A hot gas layer formed and contributed to cable ignition in the second cabinet. A diagonal cable bundle also appeared to contribute to fire spread. That is, a cable bundle ignited low in the initial cabinet and climbed slowly until it reached the adjacent cabinet.

Based on these results, the recommended approach for Fire PRA is as follows

- Assume no fire spread if either:
    1. Cabinets are separated by a double wall with an air gap, or
    2. Either the exposed or exposing cabinet has an open top, *and* there is an internal wall, possibly with some openings, *and* there is no diagonal cable run between the exposing and exposed cabinet.
- If fire spread cannot be ruled out, assume that no significant heat release occurs from the adjacent cabinet for 15 minutes.

There may also be other conditions for which the fire protection engineer is aware of applicable tests, analytical results, or other insights. Engineering judgment should be applied to consider other configurations not favorable for propagation. A visual examination of the cabinet internals is recommended to identify cables across cabinet walls or openings between cabinets. If such characteristics are present, fire propagation between cabinets may not be ruled out.

S.2 Damage to Adjacent Cabinets

The fire test data also provide insights regarding damage to components or cables in adjacent cabinets. The test results implied that damage could only be prevented by a double wall and an air gap. Even these cases were not definitive with regard to sensitive electronics.

Tests did indicate the following results for the adjacent cabinet. There were:

- no electrical shorts, and
- switches and meters functioned.

Because other tests (NUREG/CR-4356) showed that relays had about the same damage criteria as switches and meters, relays should function in adjacent cabinets.

However, temperatures, in some cases, did appear to exceed limits for sensitive electronic equipment. Specifically, for a vertical cabinet with unqualified cable, the peak temperature in the adjacent cabinet was 180°F, slightly higher than the 150°F damage criteria for sensitive electronics reported in Appendix H.

The time to reach this temperature was somewhat delayed. The test enclosure and the adjacent cabinet temperatures peaked at least 5 minutes after the peak heat release rate occurred in the exposing cabinet. The temperature inside the adjacent cabinet further lagged the test enclosure by 7 minutes. Consequently, damage to sensitive electronics should not occur for at least 10 minutes after the peak heat release rate.

This conclusion requires two qualifications. The only test for qualified cable showed temperatures lower than the damage criteria and a further delayed peak temperature in the adjacent cabinet. However, the test occurred in a cabinet with the door open. It is not clear whether the open door decreased the effect of the adjacent fire or increased the effect of the test enclosure temperature. Nevertheless, based on the test data available, it seems unlikely that no damage would occur to sensitive electronics in the adjacent cabinet if the exposing cabinet contained qualified cable.

Fire modeling tools can be use to model fire conditions in compartments with different geometrical characteristics than that of the test enclosure.

The following approach is recommended for the Fire PRA.

- Assume loss of function in an adjacent cabinet if there is not a double wall with an air gap.
- Assume no damage in the second adjacent cabinet occurs until after the fire propagates to the adjacent cabinet. Assume damage can occur earlier if there are large openings in a wall and plenum areas in which a hot gas layer is likely to form. That is, the two walls of the intervening cabinet can be credited as a double wall with a (large) air gap.
- Assume no damage to an adjacent cabinet if:
  - there is a double wall with an air gap, and
  - there are no sensitive electronics in the adjacent cabinet (or the sensitive electronics have been “qualified” above 180°F).
- Assume damage to sensitive electronics occurs at 10 minutes if there is a double wall with an air gap.
- Assume damage to sensitive electronics can be prevented before 10 minutes if the fire is extinguished and the cabinet is cooled, e.g., by CO_2 extinguishers.

Appendix T

Appendix for Chapter 11, Smoke Damage

T
APPENDIX FOR CHAPTER 11, SMOKE DAMAGE

T.1 Introduction

Circuit bridging faults associated with airborne smoke appear to involve two somewhat distinct classes of behavior; one related to lower voltage components, including, in particular, instrument and control components, and one related to higher voltage power components.

With regard to the lower voltage circuits, test results have clearly shown that circuit bridging can damage these components. Data also show that smoke-induced circuit bridging results from a combination of airborne and deposited smoke. These behaviors have not been fully explored, but appear to be associated with moderate- to high-smoke exposure densities. It would appear reasonable, in the near term, to base Fire PRA smoke damage assessments on estimates of the airborne smoke density to which the component is exposed. That is, airborne smoke exposure and time of exposure will largely determine the deposition behaviors, so in the near term, airborne smoke concentration may reasonably be used as a surrogate for both modes of damage; airborne, and deposited smoke. Protection measures such as encapsulation or use of conformal coatings are effective against this damage mechanism.

For the higher voltage components, including, in particular, power distribution components like breakers and switchgear, there is some limited fire experience that indicates these components may be vulnerable to failure from sufficiently dense smoke exposure. In both events reviewed here, the faults were manifested as arcing faults that ultimately led to component tripping and, in one case, secondary fires. Limited tests performed in support of this review appear to bear out this potential. Intermittent and continuous arcing of a high voltage test apparatus was observed when exposed to smoke. The extent of the arcing was found to depend on the separation distance between the energized plates and on the fuel load (smoke density) used in the tests. Voltage was not varied, but is also likely an important factor.

In the near term, Fire PRAs could easily include bounding assessments of the potential for damage to high-voltage components by airborne smoke. However, given the current state of knowledge, the assessments would require the application of considerable expert judgment. For example, the analyst would have to presume that fires of a sufficient intensity would damage high voltage equipment, and would then have to relate “sufficient intensity” to the postulated fire scenarios. Based on experience, the damage would likely be limited to components exposed through a direct path for smoke spread from the fire source to the exposed component. That is, in both cases cited above, smoke spread through connecting bus ducts apparently led to the tripping of exposed equipment. Thus, a Fire PRA analysis could examine the connections between the postulated fire source (e.g., one switchgear cubical) and, using judgment, assess the damage potential for other exposed components that shared some physical connection to the source (e.g., where housed in the same bank of switchgear or where connected by unsealed bus ducts). Given this approach, the PRA results will retain considerable uncertainty.

T.1.1 Contact Fouling

With the contact fouling damage mode, the potential concern is that smoke particulate deposition onto the surfaces of an open contact pair might inhibit the electrical function of the contacts (i.e., induce high contact resistance) upon closing. This mechanism of damage has potential application to devices like hand switches and relays. There is currently very little information available regarding the potential for smoke to foul contact pairs sufficiently to degrade or compromise component function. What little information that is available derives from U.S. NRC sponsored tests at SNL during the early- to mid-1980s [T.1].

In these tests, five relays and 24 hand switches were exposed to smoke during four separate electrical control panel fire tests (two tests at SNL and two at Factory Mutual Research Corporation (FMRC)). Of the tested components of this type, only two of the relays were actually operated during the fire exposures. Both of these relays were designed with covers (plastic or glass) that protected the contacts from direct smoke exposure. Two of the relays and two hand switches were provided with an electrical energizing potential across an open contact pair to simulate the conditions of an actual in-service component. Again, for both relays, covers protected the contacts from direct smoke exposure.

The results of the tests did illustrate that smoke was deposited onto open contact pairs, in some cases in significant quantities. In this context, the switches with openly exposed contacts are of primary interest. The energized open contact pairs in particular were observed to develop “soot bridges” that connected the two contacts. These results are also consistent with more recent tests that show that soot will preferentially deposit onto areas of high electrical bias (such as a pair of circuit traces with a significant voltage potential between them) [T.2]. However, for the relay and switch tests, in no case was significant leakage current across open contact pairs noted.

With the open contact pairs on the switches, for example, some electrical contact degradation was observed upon initial closing of the switch (a high-contact resistance). However, cycling of the contact pairs under a modest voltage potential loading (even as low as 15 VAC) cleared the connections. Under a voltage load, a closing switch inevitably generates a very modest electrical arc upon closing. Presumably, this arcing was sufficient to clear the contacts in combination with the physical motion of the switches. In all such cases, the switches were relatively large and designed to operate at current levels of 5 amp or greater.

Some lower amperage switches were also tested, but these were smaller and better sealed units (typically pushbutton switches, often with integral indicating lights). These smaller switches experienced no similar problems. It was also noted that for the relays tested, little or no soot penetration was observed in the relay casing.

In summary, there is some evidence that fouling of open contact pairs due to soot deposition may degrade the electrical performance of the contacts upon initial closure. However, cycling of the contacts under voltage was found sufficient to mitigate the damage and restore full electrical function. In no case was such fouling found sufficient to render a set of contact pairs inoperable. Hence, these tests found little basis for substantial concern over contact fouling as a significant mode of smoke damage. The tests all involved relatively modest smoke exposure conditions (modest fires in a large room with high ventilation rates). The tests did not explore exposures at higher smoke loading conditions. However, based on this evidence, it would appear that contact fouling is of little potential risk significance.

T.1.2 Binding of Mechanical Movement

Binding of mechanical movement is a mode of smoke damage wherein component failures are the result of smoke deposited onto a device that interferes with mechanical movement. This mode of damage was first noted during U.S. NRC-sponsored testing at SNL during the early-to mid-1980s. This particular test series included exposure of several different devices to secondary fire effects (i.e., devices were not within the immediate zone of influence (ZOI) of the fire, but were exposed to hot layer effects). These tests were conducted in conjunction with the U.S. NRC/SNL Cabinet Fire Test Program [T.3] and are documented in a separate test report [T.1]. Devices tested that were dependent on mechanical movement included relays, strip chart recorders, and meters. Only one other known test program has investigated the impact of smoke on devices that rely on mechanical movement. This program is a very recent U.S. NRC-sponsored study at SNL that exposed computer hard disk drive (HDD) units to smoke [T.4].

T.1.2.1 Relays

A total of five relays were tested during two cabinet fire tests. The test specimens were all control type relays with 120 VAC coils. The tests were performed in a large-scale test enclosure at FMRC facilities under subcontract to SNL. The two tests in question are identified in Reference [T.1] as Tests 4 and 5 or as FM4 and FM5. These correspond to Tests 24 and 25 as identified in Reference [T.3]. Recall that the nominal fuel to air volume ratio for these two tests was 30 g/m^3 and 7 g/m^3, respectively.

Relays are dependent on some limited mechanical movement. An electromagnet or solenoid acts on a pivoted contact support arm that rotates through a small angle (a few degrees of arc at most). The outer tip of the contract arm needs to move only a small distance (typically on the order of one to a few tenths of an inch) in order to close the electrical contacts. In general, the driving forces associated with the movement of a relay are substantial, and the required range of motion is quite limited. There was some potential that smoke deposits and/or corrosion might inhibit movement through an attack on the contact arm pivot structures.

During cabinet fire test exposures, no relay failures were noted. Relays were tested in three operational configurations: contacts energized but coil not operated; contacts energized and coil operated regularly through the test; and nonenergized, nonoperated. All relays were tested after the exposure to assess operability. The relays came with plastic covers that protected the internal parts of the relay. Most were tested with the covers in place, although one relay was tested with the cover removed. While this last relay did experience some corrosion damage, the damage was insufficient to prevent the relay's operation. One relay was also exposed to a high humidity environment for 12 hours following the fire test (no cleaning of the relay) and tested for operability. Again, no functional failure was noted.

Note that Reference [T.1] also describes a series of thermal exposure tests in which two types of relays were tested to failure. These tests did not involve any smoke exposure. Rather, they were performed in an air-oven under thermal exposure conditions only. Hence, they are not of direct interest to the current study.

Based on this evidence, it would appear that relays are not particularly vulnerable to short-term smoke damage due to binding of the required mechanical movement. The relay actuator provides a substantial driving force, which is capable of overcoming significant resistance to movement at the contact support arm pivot structure. The smoke deposited on the relays was unable to induce sufficient binding force to overcome the movements driving force. Similar findings would likely be observed for other devices including switchgear, breakers, and motor control centers (MCCs). The movement force of these devices is substantial, and appears sufficient to overcome smoke binding. Over an extended period, corrosive attack might ultimately lead to binding of this movement.

T.1.2.2 Strip Chart Recorders

Another of the components tested during the large-scale electrical control panel fire tests was pen-type strip-chart recording devices. These devices operate by moving one or more pen tips along a one-dimensional guide bar with the pen position proportional to an input voltage signal. A continuous strip of paper passes by the pen tips on a motor-driven set of rollers to record the position of the pen versus time. The devices are dependent on the movement of both the recording pens and the paper.

Two such devices were tested. The exposure included some rise in temperature, as well as the smoke exposure. However, the temperature rises were modest, and the primary damage was attributed to smoke. Particularly, smoke deposited onto the pen and pen guide bar mechanism inhibiting the pen's movement. In the first test, the strip chart recorder was set in the open with the plastic face cover removed. In this test, all three of the recorder pens were damaged and post-fire attempts to clean the recorder and restore function failed. In the second test, the recorder was surface-mounted into a panel (not the one involved in the fire) with the face cover intact. In this test, only one of the three pens failed, and post-fire cleaning restored the function. In neither case was the movement of the paper inhibited. The level of smoke exposure at which degradation of the pen's motion was observed was not specifically measured.

The strip chart recorder tests illustrate that the driving force associated with a device's required movement is a critical factor in determining the damage potential. For the strip chart recorders, the driving forces associated with the paper were much greater than those associated with the pen. Devices where the driving force is substantial appear able to overcome the relatively modest binding force of the smoke, at least in the short term. Hence, movement of the paper was not degraded while movement of the pen was.

T.1.2.3 Dial Meters

In conjunction with the cabinet fire tests, a total of 13 dial indicating meters were tested during four separate tests (two at SNL and two at FMRC) [T.1]. None of the meters was powered during the exposures, but postexposure calibration tests were performed on each to ensure postexposure functionality. Mechanical binding is identified as one of the failure modes specifically anticipated for these devices.

Of the 13 meters tests, only two were observed to fail. Both of these were mounted directly above the fire panel and were destroyed by heat (gross melting of the relay cases was observed). All of the other relays functioned properly after the tests. No damage was observed due to smoke.

It is noted in the test report that "the types of meters tested are all reasonably well sealed from the outside environment. No evidence of particulate or corrosive vapor penetration into the meters was noted in any case except for the destroyed meters. Any type of meter or gauge which is not reasonably sealed could behave considerably different." That is to say, in this case, the survival of the meters was attributed to their well-sealed nature meters with openings that might expose the mechanical movement parts to smoke would likely see some performance degradation, if not outright failure. Unfortunately, no tests are available to corroborate this supposition.

T.1.2.4 Hard Disk Drive Units

In a very recent series of U.S. NRC-sponsored tests, a number of computer HDD units were exposed to smoke and monitored for performance [T.4]. The HDD units are relatively self-contained devices. Within an external housing is a set of magnetic storage disk plates that are spun by a small electric motor. Data is written to or read from the disk via a read/write head that moves in and out along a radius of the disks. The devices depend on precise movement and speed control of both the spinning disks and the moving read/write heads.

In testing, there were no observed failures of any of the tested HDD units due to smoke exposure. The fine mechanical movement of these devices was not inhibited in any way. This is attributed to the fact that the HDD units are factory-sealed to ensure that the interior of the unit remains clean. The sealing system of the tested units includes neoprene or silicone rubber O-ring seals and metallic tape. This was found to be typical of such units. The factory seal was found to be quite robust when exposed to smoke, and upon posttest examination, no evidence of any smoke penetration into the devices was observed.

These tests illustrate that isolation of a mechanical device within a well-sealed shell can effectively prevent smoke penetration into the device. This, in turn, can prevent smoke from inhibiting the fine mechanical movements. In this case, the device tests were dependent on close control of those movements, and hence would nominally be very sensitive to any smoke intrusion.

T.1.2.5 Summary of Insights for Binding Mechanical Movement

The available tests illustrate the potential for deposited smoke to prevent or impede fine mechanical movements. However, they also illustrate that only sensitive devices with a small motive or driving force and with an open pathway to exposure of the moving elements are vulnerable to this failure mode. Encapsulation of a mechanical device was found to effectively prevent this damage mechanism from manifesting.

Devices potentially subject to this damage mechanism would include any device whose function relies on the movement of small mechanical elements, and in particular, such devices where the

driving forces are small. As demonstrated by the available tests, this includes strip chart recorders. However, other devices may also be subject to such problems, including, in particular, various types of electrical dial indicators (that is, indicators that rely on the movement of a small needle or pointer). Again, a pathway for exposure of the moving components to smoke deposits is also required.

Devices that would not be subject to failure from this damage mode would include any device that lacks moving mechanical elements (i.e., fully electronic devices and passive mechanical elements). Devices that are contained within a well-sealed shell would also be invulnerable to such damage, provided that the shell is not breached due, for example, to heat exposure and warping (at which point smoke exposure is likely moot due to the thermal damage).

Devices that rely on mechanical movement but where the driving forces are substantial (such as relays, solenoids, breakers, and switchgear) would also be invulnerable to this damage mode. Relay testing has shown that the binding force of the smoke is relatively modest, and that sufficient force acting to initiate the movement can overcome that binding force. For devices with a substantial driving force, mechanical binding might occur from a combination of smoke deposition and direct chemical/corrosive attack (for example, chemical attack and soot binding on pivot- or axle-type structures within a device), but substantial degradation would be required before the binding force would impede movement. Because some additional chemical/corrosive degradation would be required, the potential for failure would likely be manifested only well after a fire event actually occurs (i.e., days or even months later). Hence, such failure would not be considered fire risk-significant. Proper management of postfire recovery activities consistent with current accepted practices would mitigate the potential for postfire problems being observed (i.e., inspection, cleaning, and/or replacement of all smoke-exposed components).

Factors that would mitigate the potential damage from mechanical binding include any measure that limits the smoke deposition onto the vulnerable mechanical parts. For example, of the two strip chart recorders tested by SNL, one had no face cover and one had an intact face cover. Neither device was specifically sealed against smoke intrusion, and both suffered some degree of functional damage. However, the device without the face cover clearly suffered more severe and irrecoverable damage than the device with the face cover intact. For the HDD units tested, no damage was observed from smoke intrusion into the interior of the factory-sealed outer shell. The high quality of the typical factory environmental seals was attributed with preventing any smoke damage to the device internals. If a device is fully enclosed and does not include cooling or ventilation fans or open ventilation grills, smoke deposition would be sharply reduced. In the case of electrical dial indicators, for example, these devices are typically well encased and self-contained devices. Hence, the actual potential for smoke intrusion is likely small. In some cases, however, the fine mechanical movement may be exposed on the back side of the device, and/or the devices may not be well sealed so that some smoke intrusion is possible. For this mechanism to be realized, the smoke should come into actual contact with the vulnerable mechanical elements. Any measure that prevents this would also prevent the damage.

In terms of recovery of damage devices, in general, smoke deposits may be removed by a thorough cleaning of the device, and operation may be restored. However, this process will generally require removing the device from service, and thorough cleaning (the most common techniques used currently rely on the use of water-based detergents so that removal from service would be required). In some cases, there may be a concurrent chemical/corrosive attack that will prevent restoration of service. This, for example, appears to be the case for the first of the two

SNL strip chart recorder tests. In any case, it is unreasonable to assume that reliable operation might be restored by intervention during or shortly after a fire event. For the purposes of risk assessment, it would appear prudent to assume that devices found vulnerable to this failure mechanism would fail unrecoverably.

T.1.2.6 Risk Implications of Mechanical Binding Damage Mode

Overall, smoke-induced binding of mechanical motion will be of little risk significance. The primary concern for this mode of failure are for devices dependent on fine mechanical movement where the driving forces are relatively small and where the encapsulation of the device is absent or incomplete. This would imply indication devices (e.g., meters and strip chart recorders) rather than control or power devices (relays, switches, motors, valves, etc.). The protective covers commonly associated with indication devices provided significant protection from this damage mode.

Given the concentration of indication devices in the MCR, one might nominally expect that damage to those devices in the event of an MCR fire might be risk-significant. However, even in the MCR, the risk significance of smoke damage to indication devices will likely be very small. This is because a fire that introduces significant quantities of smoke into the MCR would also be assumed, in a Fire PRA, to lead to MCR abandonment. Once abandonment takes place, the MCR indication devices are of no further use to operators. The exception might be analyses that attempt to credit MCR reentry following fire suppression, but this is not typically credited in current Fire PRAs. Furthermore, the failure of an indicator due to binding would not generally impede system function. Hence, it is unlikely that any fire risk scenarios could be developed where smoke-induced damage to indication devices was a significant factor.

T.2 Summary of Findings

T.2.1 Failure Modes and Component Vulnerability

Based on current testing, four modes of smoke damage have been identified. Of these four failure modes, only one, circuit bridging, has the potential to introduce new risk-significant fire scenarios. The four failure modes identified, the types of equipment potentially vulnerable to each failure mode, and the risk implications of such failures are summarized as follows.

T.2.1.1 Circuit Bridging

T.2.1.1.1 Damage Mechanism

Smoke is an electrically conductive media. Hence, smoke deposited on surfaces may cause short circuits. Airborne smoke may also act as a conductive media, increasing the circuit bridging potential. Finally, smoke may act as an ionizing gas that contributes to arcing faults in higher voltage power distribution components. Synergistic effects with moisture/humidity are highly important to this damage mode (higher humidity appears to sharply increase the damage potential).

T.2.1.1.2 Vulnerable Components

This mode of failure may impact two classes of equipment; namely, printed circuit based components (including digital control and instrumentation circuits), and high-voltage power distribution devices (such as switchgear, MCCs, transformers, and breakers).

For high-voltage equipment, the actual vulnerability appears dominated by airborne smoke but remains indeterminate. Some fire experience and limited test results appear to bear out the potential for concern.

For electronic equipment, circuit bridging faults are caused by a combination of deposited and airborne smoke. Based on the testing performed to date, it is concluded that minor smoke exposures (equivalent to less than 10 g/m3 of fuel burned per unit of involved air volume) are not a hazard to most electronic components. Rather, it would take a substantial smoke exposure to cause damage (i.e., at the least greater than 10 g/m3 of fuel burned per unit of involved air volume).

T.2.1.1.3 Risk Implications

While a range of electronic and high-voltage equipment may be lost to this mode of failure, it appears that substantial smoke exposure densities are required to induce this faulting mode. For example, the general density of smoke given a moderate fire in a large room may not approach damaging exposure levels. However, a small fire within a more confined space, such as a single electrical panel or a bank of commonly connected electrical panels, might cause damage.

For high-voltage power distribution components, the types of circuit faults anticipated include initial arcing faults, tripping of circuit protection features causing loss of power to systems and equipment, and secondary fires.

For the electronic instrument and control components, the impact of component failures on plant circuits and systems may be very difficult to assess. This is because electrical shorting may occur between any two adjacent circuit traces and multiple trace pairs may short concurrently. The impact on the operation of the integrated circuit device may be very difficult to predict. Circuit fault modes may well include loss of function, loss of indication, loss of control, spurious operation (SO) of systems and components, or concurrent combinations of these faults. Faults may also be continuous or intermittent, depending on the severity and duration of the exposure.

T.2.1.1.4 Potential Risk Significance

This mode of component failure may be risk-significant.

T.2.1.2 Contact Fouling

T.2.1.2.1 Damage Mechanism

Smoke deposited onto open electrical contacts can increase electrical resistance upon closure of the contacts.

T.2.1.2.2 Vulnerable Components

Any component that contains open and unprotected contact pairs is nominally vulnerable to this mode of failure.

T.2.1.2.3 Risk Implications

There is some potential that control switches or open and unprotected relays might fail to establish sufficient contact to actuate control devices upon initial closure if a significant smoke deposition is realized prior to closure. However, testing has demonstrated that, while some degradation (on the order of a 100 ohm initial contact resistance) of the electrical connection may be noted on initial closing, cycling the contacts or applying a modest voltage potential (as low as 15 V) was found to effectively clear the contacts restoring full operability. Hence, a complete loss of function due to this mode of smoke damage appears implausible.

T.2.1.2.4 Overall Risk Significance

This mode of failure is found to have little or no risk significance.

T.2.1.3 Binding of Mechanical Movement

T.2.1.3.1 Damage Mechanism

Smoke deposited on surfaces can inhibit fine mechanical motions.

T.2.1.3.2 Vulnerable Components

Components that are dependent on fine mechanical movement involving small driving forces are vulnerable to this mode of failure. This may include, in particular, indication components such as strip chart recorders, dial indicators, and meters. (This failure mode would not impact other devices where the motive force is more substantial. This would include, for example, relays, breakers, switchgear, MCCs, and similar devices.) Encapsulation of such devices so that smoke cannot penetrate to the moving parts effectively mitigates the damage potential.

T.2.1.3.3 Potential Risk Implications

The failure of an indication component would not generally result in the direct loss of any risk-important system functions. In the specific case of Control Room fires, where multiple indication devices might be impacted, the risk implications are still minimal. This is because abandonment would be assumed in a Fire PRA if smoke became sufficiently dense to cause such damage. This would render the loss of Control Room indications irrelevant to the subsequent scenario development.

T.2.1.3.4 Overall Risk Significance

This mode of component failure is found to have little or no risk significance.

T.2.1.4 Direct Chemical/Corrosive Attack

T.2.1.4.1 Damage Mechanism

Smoke deposits are typically highly acidic, and may also contain galvanic salts. These materials may lead to substantial corrosion. Synergistic effects with increasing moisture/humidity sharply increase the potential damage caused by chemical/corrosive attack.

T.2.1.4.2 Vulnerable Components

Most electrical and some mechanical components will be vulnerable to this mode of failure.

T.2.1.4.3 Risk Implications

Postfire corrosion damage has often been cited as significant in incident reports. However, corrosion damage sufficient to cause immediate failure of an electrical or electronic device requires a time scale ranging from days to months. Risk-significant fire scenarios are generally resolved within a time scale of minutes to hours. Hence, chemical/corrosive attack is not expected to play a significant role in fire risk. Proper postfire management strategies can effectively eliminate any significant risk contribution from longer-term component failures.

T.2.1.4.4 Overall Risk Significance

This mode of failure is found to have minimal risk significance.

T.2.2 Findings Associated with PRA Modeling of Smoke Damage

Only one mode of component failure was found in this review to be of potential risk significance; namely, circuit bridging. This failure mode may be realized as a result of simple airborne smoke particulate concentrations reaching threshold levels (in particular for higher voltage components) and/or due to deposition of smoke particulate onto vulnerable components.

Current fire models and data are insufficient at this time to directly assess the risk contribution of circuit bridging faults. Screening or bounding assessments can be made but, given current

knowledge, would be dependent on the application of expert judgment and would retain considerable uncertainty.

To incorporate a direct assessment of circuit bridging faults into Fire PRA, it will be necessary to (1) better quantify the smoke damage criteria and thresholds for the components of interest, (2) incorporate smoke generation and transport models into the fire models used in Fire PRA, and (3) validate the analytical link between fire modeling and predictions of component damage. In the near term, such assessments can reasonably be based on the airborne smoke exposure concentration and, perhaps, the exposure duration. Hence, models that can predict the airborne smoke concentration would be sufficient to suit short-term analysis needs.

In the longer term, it would be desirable to develop models that could estimate the deposition behavior of smoke, as well and specifically correlate the combination of deposited and airborne smoke to component damage. In more specific terms, the PRA needs can be more clearly established by considering two classes of potentially vulnerable components; namely, high-voltage power distribution equipment and lower-voltage instrument and control system components.

T.2.2.1 High Voltage Components

T.2.2.1.1 Damage Thresholds

For high-voltage components, the most critical need is to establish a method (and supporting data) for estimating the smoke damage threshold of a given component or application (for example, how much smoke does it take to cause a failure in a particular 4.6kV switchgear?). Initial test results indicate that relatively simple relationships between voltage, separation distances between voltage potentials, and the smoke exposure severity may be sufficient to establish a component's potential vulnerability to smoke damage.

T.2.2.1.2 Screening Analyses

Current screening methods applied to Fire PRAs commonly assume that most any fire will lead to total loss of the impacted room's contents. This inherently includes damage caused by smoke. For high-voltage components, and additional level of analysis may be appropriate to reduce the level of conservatism associated with screening. For example, relatively limited data on component vulnerability (the voltage, separation distance, smoke damage relationship) would be sufficient to screen components without any significant need for fire modeling tools. That is, if a method can be established by which a device's potential smoke vulnerability could be assessed based only on the device voltage and contact separation distances, an initial screening of in-plant components as either vulnerable or invulnerable is possible.

T.2.2.1.3 Risk Quantification

A more refined estimate of fire risk would require that methods be established to estimate the threshold smoke exposure damage levels for specific components. It would also require the ability to predict airborne smoke concentrations through fire modeling, including the smoke concentrations that might occur within a subsection of a room, such as a bank of interconnected breaker or switchgear panels. Deposition is likely not a significant factor in high-voltage equipment faults; hence, deposition modeling may not be necessary. The explicit capability to assess smoke generation and transport behavior does not exist in any of the currently popular NPP fire risk models. However, nominal capabilities do exist in other fire models. Hence, the capability could be added to the risk assessment models with relatively modest effort. In particular, fire models that currently track toxic gas production and concentrations should be readily adaptable to smoke modeling at this level (airborne concentration estimates). Some additional data on smoke production yields for the fuels of interest (cable insulation and liquid fuels primarily) may also be needed to support the modeling activities.

T.2.2.2 Lower-Voltage Instrumentation and Control Devices

T.2.2.2.1 Damage Thresholds

As noted above, the circuit bridging failures are a function of both airborne and deposited smoke. Moisture and humidity also play a significant synergistic role in increasing the damage potential. However, these behaviors are not currently well characterized. There is currently very limited information available to characterize smoke damage thresholds for specific components. The synergistic behavior of moisture also is poorly understood. Supplementing this data would substantially reduce uncertainties in risk estimates and ensure that excessive conservatism is avoided.

T.2.2.2.2 Screening Analyses

For the purposes of a fire screening analysis, it is reasonable to assume that any substantial fire might result in widespread smoke damage to exposed electronic devices. This is, in fact, not substantially different from current PRA area screening methods. The typical practice in screening is to assume that most any fire will result in total loss of a room's contents. If fully implemented, this inherently captures damage due to smoke, as well.

T.2.2.2.3 Risk Quantification

In order to more accurately estimate the contribution to fire risk, the analyst will need access to fire models the can predict the smoke generation and transport behavior associated with specific fire scenarios. The models currently applied to NPP Fire PRA do not provide this capability. One would also need to establish a link between the model predictions and the damage behavior of specific components of interest. For example, an integrated assessment of smoke exposure severity and time of exposure could likely be used to predict the onset of component damage. Again, these tools do not currently exist.

T.3 A PRA Framework for Smoke Damage

T.3.1 Practices Supported by the Current State of the Art

The current state of knowledge cannot support detailed quantitative assessments of smoke damage as a part of a Fire PRA. As described above, information relating to smoke damage thresholds remains lacking, and the current fire modeling tools as applied in Fire PRA do not provide the necessary analytical capabilities.

Given these limitations, it is recommended that fire scenario analysis should include qualitatively (or judgment-) based assessments of smoke-induced damage. Such qualitative assessments can be factored into a quantitative Fire PRA analysis as component failures assumed in addition to thermally-induced damage. For medium and high-voltage electrical equipment, creepage distances and use of insulation on conductors should be considered. For example, most medium voltage switchgear bus bars are coated with a plastic insulating material to reduce the likelihood of phase-to-ground or phase-to-phase arcing faults. This insulation would be expected to greatly reduce the possibility of arcing in the presence of heavy smoke, because the smoke will not be in direct contact with the conductors.

The following assumptions should be included in the PRA assessment.

- The following types of components are potentially vulnerable to smoke damage:
  - Medium voltage electrical switching equipment (1,000 V to 15 kV), including switchgear, circuit breakers, surge arrestors, switches, etc.
  - High-voltage electrical power transmission equipment (above 15 kV), including transformers, switches, circuit breakers, overhead power lines, lightning arrestors, bus bars, etc.
  - Devices that rely on fine mechanical motion (e.g., strip chart recorders and dial indicators) where the moving parts are exposed to smoke deposition.
  - Unprotected printed circuit cards and electronic components.
- Short-term smoke damage will only result from a severe smoke exposure condition.
  - For general compartment scenarios: Smoke exposures arising from a general compartment fire (e.g., general smoke spread within the room of fire origin or in an adjacent compartment) will not lead to short-term smoke damage, even for potentially vulnerable components.
  - For components housed in an individual electrical panel: Smoke damage will likely be limited to components colocated in the same electrical panel as the fire ignition source itself. Assume that, given a substantial fire in an individual electrical panel, all potentially vulnerable components within that panel will be damaged by smoke unless a specific installation feature precludes such damage (see below). Thermal damage for such components should also be considered.

- For components located in an interconnected bank of electrical panels: Given a substantive fire, it is reasonable to assume that dense smoke will spread, at the very least, into directly adjoining panel sections. Given a substantial fire in one section of an interconnected bank of panels, assume that potentially vulnerable components in the immediately adjoining panels will be damaged due to smoke exposure.
- For very high-voltage electrical transmission equipment: Assume that exposure to substantial quantities of smoke (e.g., from a large forest fire or from a large oil fire) will cause high-voltage transmission equipment to trip off-line.
- For components in an open main control board-type configuration: smoke exposure conditions are not expected to reach levels sufficient to cause component failures.

- The following features are assumed to preclude short-term smoke damage:
  - Use of a conformal coating on a printed circuit card;
  - Hermetic encapsulation of electronic, solid state, or electromechanical devices (e.g., as is typical of a solid state relay or computer HDD unit);
  - Housing of control and indication components in a well-sealed manufacturers' housing (e.g., typical of a dial indicator, strip chart recorder with all covers in place and intact, electromechanical relays with a tight-fitting cover);
  - Housing potentially vulnerable components within an electrical chassis, so long as the chassis is reasonably well sealed, ventilation inlets into the chassis are filtered, and the fire itself remains outside the chassis;
  - Housing components in a sealed panel with a filtered local ventilation system (so long as the fire remains outside the panel); and
  - Housing components in a well-sealed and unventilated electrical panel so long as the fire remains outside the panel.

T.4 References

T.1 Jacobus, M.J., Screening Tests of Representative Nuclear Power Plant Components Exposed to Secondary Fire Environments, SAND86-0394, NUREG/CR-4596, U.S. NRC, June 1986.

T.2 Tanaka, T.J., S.P. Nowlen and D.J. Anderson, Circuit Bridging of Components by Smoke, SAND96-2633, NUREG/CR-6476, U.S. NRC, October 1996.

T.3 Chavez, J.M., An Experimental Investigation of Internally Ignited Fires in Nuclear Power Plant Control Cabinets, Part I - Cabinet Effects Tests, NUREG/CR-4527/V1, SNL/USNRC, April 1987; and: Chavez, J.M. and S.P. Nowlen, An Experimental Investigation of Internally Ignited Fires in Nuclear Power Plant Cabinets, Part II - Room Effects Tests, NUREG/CR-4527/V2, U.S. NRC, October 1988.

T.4 Tanaka, T.J. and S.P. Nowlen, Results and Insights on the Impact of Smoke on Digital Instrumentation and Controls, SAND99-1320, NUREG/CR-6597, U.S. NRC, Publication Pending.

Appendix U

Appendix for Chapter 15, Uncertainty Analysis–Technical Bases

U
APPENDIX FOR CHAPTER 15, UNCERTAINTY ANALYSIS–TECHNICAL BASES

The Task 15 procedure is used for identifying uncertainties in the Fire PRA and performing uncertainty and sensitivity analyses useful to analysts and future applications of the PRA. Analysts using this procedure should understand the importance of including uncertainties in the results, the basic types of uncertainties, and typical handling of uncertainties in PRAs. The information below provides the technical theory and principles upon which this procedure is based. Analysts using this procedure should have a basic understanding of the concepts presented below.

U.1 Background

Below are some basic assertions that provide the foundation for subsequent discussion.

- There are physical variables that are, in principle, observable. Examples include the time to failure of a particular component when exposed to a particular fire event, the time at which an operator takes a particular action at a given point in an accident sequence, or the amount and type of combustible in a given location. The values of such a set of variables need to be predicted as part of the Fire PRA.
- Because of limitations in resources, lack of knowledge, or both, some of these variables are treated as the result of random processes. In other words, if a thought experiment is employed involving a number of repeatable trials, a distribution of values (e.g., an empirical histogram) for the variable of interest can be envisioned. The prediction, therefore, will be in terms of a probability distribution.
- The remaining variables may be treated as being deterministic. Again, if a thought experiment involving a number of repeatable trials is employed, a single value for the variable of interest (or, at least, a range of variability that is sufficiently small for the practical application) will be observed. The prediction, therefore, will be in terms of a point value, at least in principle.

Note that because choice is involved, there is no fundamental principle as to when a variable should be modeled as random or deterministic; the analyst needs to decide if the notion of repeatable trials makes sense for the problem being addressed. In PRAs, such things as pump failures and operator actions are modeled as being random, pumps and operators are treated as coming from populations of pumps and operators, and there is no attempt to model individual pumps or individual operators. (One can argue that, even in the case of individual pumps and operators, the notion of random variability still makes sense due to processes like environmental variation and renewal).

Also note that, in current PRAs, core damage events and large early release events are modeled as the possible results of a set of interacting random processes, namely, those involving a fire that causes a plant transient, the response of mitigating systems to the transient including fire effects, and the associated actions of human operators. The occurrences of core damage and large early release events are also, therefore, random processes.

For random events occurring over time, PRAs typically use a Poisson distribution to model event occurrence. This means that the probability of observing N events in a time period T is given by:

$$P\{\text{N events in time T} \mid \lambda\} = \frac{(\lambda \cdot T)^N}{N!} \cdot e^{-\lambda T},$$

where λ, a "frequency," is simply a parameter characterizing the process. As λ increases, the likelihood of events also increases. It can be shown that the average number of events occurring in time period T is equal to λT.

It turns out that for a Poisson process, if T_1 is the time to the first event, the distribution of T_1 is exponential, i.e.,

$$P\{T_1 < t \mid \lambda\} = 1 - e^{-\lambda t}.$$

As λ increases, the probability of observing the first event by a specified time also increases. It can be shown that the average time to the first event is equal to $1/\lambda$. It can also be shown that

$$P\{T_1 < t \mid \lambda\} \approx \lambda \cdot T \text{ when } \lambda \cdot T < 0.1.$$

CDF and LERF are the frequencies of core damage events and large early release events, respectively. Thus, they are simply parameters of Poisson distributions. Of course, the values of CDF and LERF are not necessarily known with a high degree of certainty.

U.2 Types of Uncertainties: Aleatory and Epistemic

The preceding discussion addresses uncertainties due to "inherent randomness." In earlier literature, they are often called "random uncertainties" or "stochastic uncertainties." Currently, following the terminology espoused by the ACRS, they are called "aleatory uncertainties."[1] Their principal characteristic is that they are (or are modeled as being) irreducible; i.e., they are defined by the form of the probability distribution (e.g., the Poisson distribution) and the value of the distribution parameters (e.g., λ).

Note that in the examples given earlier, the variability in the uncertain variable (e.g., N or T_1) is observable, at least in principle. In other words, repeated observations of the variable will result in an empirical distribution of values. This provides a way to think about aleatory uncertainties; if repeated trials of an idealized thought experiment (where the conditions are kept constant from trial to trial) will, assuming no measurement error, lead to a distribution of outcomes for the variable, this distribution is a measure of the aleatory uncertainties in the variable.

[1] According to Webster's, *aleatory* (adj.) comes from *alia* (a dice game); relevant definitions are: (1) depending on an uncertain event; (2) relating to good or bad luck.

Another type of uncertainty addressed in PRAs is "epistemic uncertainty,"[2] which has been called "state of knowledge uncertainty" in earlier papers because it is due to weaknesses in the assessor's current state of knowledge. Uncertainties in a deterministic variable whose true value is unknown are epistemic. Repeated trials of a thought experiment involving the variable will, in principle, result in a single outcome, the true value of the variable. Similar to aleatory uncertainty, the epistemic uncertainties are also quantified using probability distributions. However, it is important not to confuse the two. Epistemic deals with the uncertainty in the parameter values of the aleatory uncertainty. For example, the uncertainties in the failure rate, λ, of a pump are considered epistemic uncertainty. The probability of experiencing at least one pump failure within time period T is the aleatory uncertainty associated with that pump.

Unlike aleatory uncertainty, epistemic uncertainty is reducible with the collection of additional information. In PRAs, for example, it is typically assumed that the Poisson model is a good representation for the failure of equipment while running. Therefore, it is assumed that there is a particular failure rate for each component. Initially, there may not be much failure data for a component, and (epistemic) uncertainty in the value of the failure rate will be large. After collecting a large enough sample of failure data, a very good estimate of the failure rate can be obtained; i.e., the epistemic uncertainty in the value of the failure rate will be small. Formally, the estimation procedure involves the application of Bayes' Theorem.

U.3 Uncertainty Analysis in PRA

Current PRAs typically use two kinds of models to address aleatory uncertainties. The first, which is applied to events occurring over time (e.g., failures of already-operating pumps), is the Poisson distribution already discussed. The second, which is applied to events occurring as the immediate consequence of a challenge (e.g., failures of standby pumps to start on demand), is the binomial distribution. This distribution quantifies the likelihood of outcomes resulting from a Bernoulli (or "coin flip") process. It is given by:

$$\mathrm{P\{R\ failures\ in\ N\ demands} \mid \phi\} = \frac{N!}{R!(N-R)!}\phi^{R}(1-\phi)^{N-R},$$

where ϕ is the probability of failure for a single demand. It can be seen that, mathematically, ϕ plays the same role as λ; it is just a parameter characterizing a distribution. As the number of trials gets very large, the relative frequency of failures, R/N, approaches ϕ. Thus, ϕ can be interpreted as the fraction of times failures will occur in the long run.

Using the various λs and ϕs corresponding to the different variables included in the Fire PRA model, the CDFs and LERFs associated with various fire event sequences can be computed. Symbolically,

[2] According to Webster's, *epistemic* (adj.) comes from *epistemikos* (capable of knowledge); relevant definitions are (1) of, having the character of, or relating to intellectually certain knowledge; (2) purely intellectual or cognitive; (3) subjective.

$$CDF = f_1(\lambda,\phi)$$

$$LERF = f_2(\lambda,\phi).$$

To quantify the epistemic uncertainties in CDF and LERF as a result of fire events, the epistemic uncertainties in the λs and ϕs are propagated through f_1 and f_2. This is currently done on a routine basis using sampling schemes (e.g., Monte Carlo sampling).

The quantification of the uncertainties in the λs and ϕs involves the collection and interpretation of a variety of forms of evidence (e.g., model predictions, expert opinion, empirical data), and the application of an appropriate estimation procedure that uses this evidence.

U.4 Uncertainties in the Integrated Fire Analysis

To develop estimates of CDF and LERF associated with fire events, fire scenario uncertainties, including fire-modeling uncertainties (e.g., initiation, growth, effects, suppression), should be addressed in an integrated PRA framework.

Using conventional PRA tools (e.g., event trees and fault trees), the scenarios resulting from fire challenges can be identified and their frequencies estimated. These estimated frequencies characterize the parameters of aleatory uncertainties associated with the occurrence of fire scenarios. Conventional PRA tools (e.g., Monte Carlo or Latin hypercube sampling) can also be used to propagate distributions quantifying the epistemic uncertainties in these estimated frequencies. Put another way, the estimated frequency for a given modeled scenario is perhaps best interpreted as the fraction of times fire-induced core damage will be observed, given a large number of challenges of the type defined by that scenario. What scenario will occur is modeled as a random process in the Fire PRA, with the corresponding scenario frequencies characterizing the aleatory uncertainties in fire-induced CDF and LERF. The uncertainty in each estimated scenario frequency is described by a distribution quantifying the epistemic uncertainties in each estimated frequency.

In modeling possible fire scenarios and the resulting CDFs and LERFs, variability in the plant response should be expected. This variability certainly arises because of the manner in which the PRA defines the fire challenge scenarios. It also arises due to modeling each fire in the analysis (e.g., growth potential, extent of equipment damage), as well as treating operator responses during the event.

Consider first the issue of scenario definition. The fire challenge scenarios identified by conventional PRAs are defined in terms of initiating events (e.g., fire initiated in a particular location with a given type/quantity of combustible) and successes or failures of mitigating equipment and actions (including effects due to the fire). These are, in turn, affected, in part, by modeling the fire in the plant. This fire modeling also has aleatory and epistemic uncertainties. For example, for an area with multiple initiator sources, which source is the start of the fire is best represented by a random event. Thus, the modeling process will likely include all possible fires as initiators (an expression of the aleatory uncertainty with regard to fires that can initiate in the area). The frequency of each fire may have both aleatory and epistemic uncertainties. For

example, if the ignition source and/or combustibles are of a transient nature, their existence will likely be considered random and characterized as an aleatory uncertainty associated with the fire initiator frequency. Given a source and combustible are present, the initiator frequency is still uncertain because whether the fire actually starts could depend on environmental conditions in the room at the time, whether conditions are suitable for spontaneous combustion, etc. Hence, there is an epistemic uncertainty associated with each fire frequency. Further, depending on the fire model, once the fire occurs, different equipment damage estimates can be assumed or estimated to occur. These and other uncertainties throughout the Fire PRA result in uncertainties in the estimated CDFs and LERFs.

In order to make most effective use of analysis results, it is important that the user understand the fundamental modeling assumptions underlying the analysis. In the case of a PRA, it is particularly important to understand how the analysis deals with uncertainties that arise because of issues not explicitly modeled and those because of imperfect knowledge concerning the issues that are explicitly modeled. This understanding will affect how the user perceives and uses the analysis results in subsequent decision-making activities.

Where there are aleatory and epistemic contributions to uncertainty, these contributions need to be separated for the reasons mentioned above. The aleatory contribution is dealt with primarily in the Fire PRA event tree (i.e., as "conditional split fractions"). The epistemic uncertainty is treated when epistemic uncertainties are propagated through the model.

U.5 References

U.1 Apostolakis, G., "The concept of probability in safety assessments of technological systems." Science. 250. 1359-1364 (1990).

U.2 Apostolakis, G., "A commentary on model uncertainty, in Model Uncertainty: Its Characterization and Quantification," A. Mosleh. N. Siu, C. Smidths, and C. Liu. Center for Reliability Engineering, University of Maryland, College Park, MD., pp. 13-22 (1995).

U.3 Parry, G. and P.W. Winter, "Characterization and evaluation of uncertainty in probabilistic risk analysis." Nuclear Safety, 22, 28-42 (1981).

Appendix V

Appendix for Chapter 15, Discussion of Individual Task Uncertainties

V
APPENDIX FOR CHAPTER 15, DISCUSSION OF INDIVIDUAL TASK UNCERTAINTIES

This appendix provides a summary discussion of each task's identified uncertainties and recommended practical strategies for their treatment. The expected role of sensitivity analyses, which could apply to almost any task, is briefly covered at the end of this appendix.

V.1 Summary of Task Uncertainties and Suggested Treatment

V.1.1 Task 1–Plant Boundary Definition and Partitioning

V.1.1.1 Uncertainty Issues

The partitioning decisions introduce an indeterminate level of modeling uncertainty associated primarily with the potential that single compartment and multicompartment fire scenarios are not analyzed with complete consistency. Partitioning decisions will also impact the presentation and interpretation of the analysis results given the presentation of risk contributions in the context of single and multicompartment scenario contributions. However, the Fire PRA should reach an identical conclusion regarding numerical estimates of fire risk, regardless of how the partitioning decisions are made.

V.1.1.2 Suggested Strategy

To address this modeling uncertainty, the partitioning should be reviewed to ensure the appropriateness and consistency of the partitioning. Further, it is recommended that the partitioning task be performed so that the potential for a multicompartment fire impact is of very low likelihood. This will allow the analysis to focus primarily on single compartment fire scenarios, which can then be analyzed in a consistent manner. No formal quantification of the uncertainty associated with partitioning decisions is anticipated.

V.1.2 Task 2–Fire PRA Components Selection

V.1.2.1 Uncertainty Issues

This task contributes a number of uncertainties, all of which are manifested in whether the equipment list, and hence the model, contain all the necessary equipment to consider. An inappropriate equipment list can cause improper focus on fire risks in the wrong areas. Of particular concern is the possibility that important fire risk contributors could be missed, such as if potential spurious operating (SO) equipment is not included. This overall modeling uncertainty takes on many forms in the development of the Fire PRA equipment list. The most significant are:

- The underlying uncertainties associated with the Internal Events PRA upon which the Fire PRA equipment list is largely based. In particular, whether the Internal Events PRA, with all its uncertainties and assumptions, as modified by the Task 2 procedure, is a sufficient base for the development of the Fire PRA equipment list.
- The uncertainty with regards to a sufficiently complete incorporation of PRA sequences including fire-induced initiators (e.g., is it appropriate to eliminate fire-LOCA sequences?), as well as any new types of scenarios that may be unique to fires, to make the PRA Equipment List as complete as it needs to be.
- The uncertainty with regards to a sufficiently detailed identification of the equipment so that equipment locations are not overlooked. For example, identifying a pump as an equipment item may not be adequate because if the analyst listed the pump and its power breaker separately, the two different room locations, one for the pump and one for the breaker, are less likely to be missed.
- The uncertainty with regards to adequate identification of those equipment items and associated failure modes of concern that relate to spurious actuations or failures of equipment that can affect the safety functions of interest.
- The uncertainty with regards to adequate identification of other equipment, such as instrumentation and diagnostic equipment, and associated failure modes of concern, so that spurious actuations or failures of this equipment that can affect human actions of interest are adequately considered.

V.1.2.1 Suggested Strategy:

All of the above contribute to the overall uncertainty of whether “the equipment list is correct.” This uncertainty could affect the accuracy in the Fire PRA model. It is suggested that uncertainty in the accuracy of the equipment list is best addressed through the use of a quality review. No quantitative assessment of these uncertainties is suggested.

V.1.3 Task 3–Fire PRA Cable Selection

V.1.3.1 Uncertainty Issues

This task contributes a number of uncertainties, all of which regard the selection of cables and designation of their locations. This overall modeling uncertainty takes on many forms. The most significant are as follows.

- Discrepancies between the plant partitioning boundary designations and the identified cable/raceway locations can cause a modeling uncertainty that could affect the accuracy of the overall results of the Fire PRA (because the location information does not match). Ensuring that the plant partitioning used for the Fire PRA matches the partitioning system used for plant cable routing through peer review can mitigate this. Where inconsistencies exist, the uncertainties can be resolved by conducting comprehensive walkdowns of the plant partitioned areas and comparing boundaries to the partitions used in Task 1. Alternatively, add the raceways of concern to all plant compartments in question. This should be done with care, as it may focus on incorrectly perceived high-risk areas.

- Use of rules that are set up in Task 3 to control what types of circuits and corresponding cables will or will not be included in the analysis can contribute to uncertainty in the cable selections. It is possible to mitigate the formulation of flawed rules for cable selection by including representatives from each of the technical task areas (i.e., those responsible for identifying the critical systems and equipment, risk modeling, fire modeling, and circuit analysis) as part of the rules development team (i.e., peer review). In this way, ambiguity and misconceptions can be minimized, if not eliminated, through detailed technical discussions.
- The Fire PRA cable selection process itself represents a potential source of uncertainty in that not all cables associated with Fire PRA components would be included in the PRA cables list for the components under review. Omissions could result from using incorrect/out-of-date drawings, misunderstandings, applying incorrect interpretations of the cable selection rules, and human error, among others. Mitigating the effects of these sources of modeling uncertainty is readily accomplished by ensuring electrical analysts are properly trained and qualified, employing a check and approval peer review process by knowledgeable persons, and using continuous oversight to ensure consistency among analysts.
- Accuracy of the cable and raceway routing information used to identify the plant locations (partition areas) through which PRA cables are routed is a source of uncertainty. The reasons for these uncertainties may result from using incorrect/out-of-date cable and raceway system data, mismatches between the plant partitioning boundary designations developed in Task 1 to the cable/raceway location relationships in the cable and raceway database, human error, or ambiguity in data. These sources of modeling uncertainty can be mitigated by employing a combination of plant area walkdowns to verify raceway locations and a check and approval peer review process by persons knowledgeable in the routing of cables and raceways in the plant.

V.1.3.2 Suggested Strategy

All of the above contribute to the overall uncertainty of whether the cable selection and location information is correct. This uncertainty could affect the accuracy of the Fire PRA Model. It is suggested this uncertainty is best addressed through the use of a quality review and task analyst training, as well as confirmatory walkdowns, where necessary. No quantitative assessment of these uncertainties is suggested.

V.1.4 Task 4–Qualitative Screening

V.1.4.1 Uncertainty Issues

The issues contributing to uncertainty in this task are related to:

- The fact that the fire impact on the operational status of the plant, i.e., automatic trip, manual scram, or manual controlled shutdown, may not be known. In some cases, this is assumed. Note that the uncertainty in the knowledge of components affected by the fire in the compartment is covered by uncertainties already discussed under previous tasks.

- The assertion that if a fire does not cause plant shutdown and the fire affects none of the components selected as critical to the Fire PRA, the risk associated with such a fire is negligible.

V.1.4.2 Suggested Strategy

These modeling issues could potentially lead to premature and inappropriate screening out of potentially important compartments from further analysis in the Fire PRA. It is suggested that any uncertainty in the qualitative screening of compartments is best addressed through a quality review. No quantitative assessment of these uncertainties is suggested. If there is doubt about the appropriateness of screening a compartment, that compartment should not be screened out, but instead, analyzed further per the other Fire PRA procedures.

V.1.5 Task 5–Fire-Induced Risk Model

V.1.5.1 Uncertainty Issues

As this is the Fire PRA model itself, its development is derived from the results of the preceding tasks, as well as from other tasks that follow, and hence inherently has the same uncertainties (some modeling, some parametric) as covered under the other tasks. Also, additional modeling uncertainties can be introduced with regard to:

- Whether the model appropriately contains all the relevant modeling of equipment failures and human actions, including the potential effects of spurious operation or failure of equipment, and
- Whether all the relevant fire ignition events and sequences are included in the model, including whether any new events to address fire situations (e.g., spurious opening of a valve due to fire effects) have been appropriately mapped to the PRA model.

V.1.5.2 Suggested Strategy

It is recommended the above uncertainties be dealt with a quality review to ensure the model appropriately reflects the results of the other tasks and that the PRA logic development is as complete as practicable. Technical reviews are expected to address the above uncertainties so that the final Fire PRA model is considered sufficient to determine the CDF/CCDP and LERF/CLERP for fire ignition events. No quantitative assessment of these modeling uncertainties is expected. Instead, as the results evolve, if certain issues appear important that the model has not yet explicitly addressed, the model should be changed to reflect the issue. For example, if the model initially includes the spurious starting of a pump but does not include the subsequent spurious stopping of the pump, and the evolving analysis suggests that the stopping of the pump could be important to the fire risk results, it is best that the model be revised to reflect this failure mode and its probability. Note that the data uncertainties associated with the model (e.g., initiator frequencies, equipment failure probabilities, human errors) are addressed elsewhere under tasks dealing with the actual quantification of the accident scenarios in the Fire PRA model.

V.1.6 Task 6–Fire-Ignition Frequency

V.1.6.1 Uncertainty Issues

There are a number of sources of uncertainty associated with this task, including those involving:

- Whether the mapping of plant-specific locations to generic locations (important, since the fire frequencies will be based on generic frequency information for generic locations) has been applied correctly;
- Whether the equipment count, which plays a part in partitioning fire initiator frequencies among multiple ignition sources, has been performed correctly;
- Whether location-weighting factors used to translate generic fire frequencies for a location to specific compartments within that location have been properly determined. The weighting factors account for the relative amount of ignition sources in a specific plant compared to the "average" plant;
- Whether the ignition source weighting factors to also account for plant-specific vs. average plant differences have been properly determined;
- Whether plant-specific fire experience has been properly identified, categorized, and analyzed as to how it should modify the generic frequency information;
- Whether the process of updating the generic frequency information with the plant-specific information has been performed correctly; and
- Whether the compartment fire frequencies have been calculated correctly based on the various ignition sources and severities.

V.1.6.2 Suggested Strategy

Besides the above "procedure process-related" uncertainties, which should be dealt with by a quality review of all the above steps and walkdowns, where appropriate, another major uncertainty is the identification, categorization, and analysis of fire events in the generic fire data used to derive the generic fire frequencies that are updated using the plant-specific fire event information. Some judgment and considerable statistical analyses have gone into determining the generic fire frequencies, including the development of uncertainty distributions for the frequencies. Assuming the above procedure process-related uncertainties are technically reviewed to at least minimize any uncertainties associated with proper application of the procedure (although whether the use of the procedure-directed weighting factors, etc., is the proper way to determine the fire frequencies is also an uncertainty not addressed here), it is thought the generic frequency distributions used in this task represent the single-most important uncertainty to be quantitatively addressed. The updated frequency distributions derived from the generic data should be propagated through the Fire PRA Model quantification using Monte Carlo or similar sampling techniques. Hence, in summary, part of the overall uncertainty in the fire frequencies is being explicitly handled during quantification, while other sources of uncertainty are not being quantified.

V.1.7 Task 7–Quantitative Screening

V.1.7.1 Uncertainty Issues

As with Task 5, the uncertainties associated with quantifying the model to screen out some fires/compartments as unimportant are largely a reflection of the uncertainties with the various task inputs into the model. However, the quantification process, itself, introduces two other uncertainties, specifically:

- The uncertainty of whether the truncation limits imposed by the quantification process are sufficiently low to achieve acceptable levels of accuracy.
- The uncertainty of whether the assumed unavailability of systems/equipment for ICDP and ILERP calculations appropriately characterizes the limiting conditions for risk-informed applications.

In addition, there is the uncertainty about whether the procedure-directed screening criteria are indeed appropriate, in that, while screening unimportant fires/compartments, the criteria do not inherently and unintentionally screen out potentially important fires/compartments.

V.1.7.2 Suggested Strategy

Technical peer reviews and some amount of trial-and-error in quantifying the model and seeing what does or does not screen (does it make sense?) are expected to address the above uncertainties so that the final Fire PRA Model is considered sufficient to determine the CDF/CCDP/ICDP and LERF/CLERP/ILERP for fire-ignition events. No quantitative assessment of these modeling uncertainties is expected. As with Task 5, the data uncertainties associated with the model are addressed elsewhere.

V.1.8 Task 8–Scoping Fire Model

V.1.8.1 Uncertainty Issues

This task involves performing some bounding fire effects analyses to determine if certain fires and/or fire compartments can be screened out from more detailed modeling and analysis because the results will not be among the dominant fire risks even with conservative effects assumed. As with other screening tasks, a key uncertainty involves:

- The appropriate performance of the screening process, particularly in choosing such parameters as the severity of the fire, heat release rates, damage criteria used, and the accuracy and completeness of the walkdown information to assess worse-case fire conditions and target failure; and
- The determination of severity factors for each unscreened ignition source based on fire modeling calculations. Therefore, the severity factor is subjected to the uncertainties inherent to the use of fire modeling tools.

V.1.8.2 Suggested Strategy

It is suggested this uncertainty is best addressed through a quality review and some trial-and-error during the screening evaluations to check that the screening appears reasonable and consistent. No quantification of the uncertainty effect is expected.

V.1.9 Task 9–Detailed Circuit Failure Analysis

V.1.9.1 Uncertainty Issues

This task involves analyzing fire critical cables and documenting the corresponding equipment failure modes. In accomplishing this task, the following sources of uncertainty are noted.

- There is the possible use of inadequate, ambiguous, or inappropriate plant-specific rules used for the analysis of critical circuits. For example, when developing a set of plant-specific circuit analysis rules, it may be generally assumed that circuits performing an apparently innocuous function (e.g., operational status indication) will not cause the component to fail, and thus need not be analyzed for their respective response. As a result, some circuits that might indeed have the capability to impair the function of their components due to fire damage may be inappropriately screened out. These circuits would also not be included in the set of circuits necessitating circuit failure likelihood analysis under Task 10.
- The circuit analysis process itself represents a potential source of uncertainty. The uncertainty associated with this substep is that not all possible circuit failure modes would be evaluated. Omissions could result from using incorrect/out-of-date drawings, misunderstandings, or applying incorrect interpretations of the circuit analysis rules and human error, among others.

V.1.9.2 Suggested Strategy

These are best addressed by review of the analyses and use of trained, experienced analysts in performing such circuit analyses. No quantitative assessment of these uncertainties is suggested.

V.1.10 Task 10–Circuit Failure Mode Likelihood Analysis

V.1.10.1 Uncertainty Issues

The purpose of this task is to estimate the likelihood of circuit failure modes for circuits that could not be previously screened out as unimportant. That likelihood is uncertain because of the following contributing uncertainties:

- Whether the approach used to analyze the circuits is appropriate for the actual situation, and the applicability of the test data used;
- Whether the specific rules to apply the approach are appropriate;

- Whether the actual analysis, including the use of weighting factors, proper characterization of the circuits, etc., have been performed properly; and
- Whether the underlying generic probabilities used in the task are accurate for the cable/circuit configurations represented.

V.1.10.2 Suggested Strategy

The process-related uncertainties are best addressed by properly trained analysts and by performing technical peer reviews of the work, including the approach selected. Based on uncertainties estimates established for the baseline EPRI/NEI cable failure test results [10.3], best estimates of the high confidence range for the failure mode probabilities are:

Cables with 15 or less conductors: ±20%

Cables with more than 15 conductors: ±50%.

These should be quantitatively applied to the failure mode probabilities that are products of this task.

V.1.11 Task 11–Detailed Fire Modeling

V.1.11.1 Uncertainty Issues

This task is used to estimate the consequences of fire scenarios expressed ultimately as probability of target damage, used in the Fire PRA model for various equipment that may be "failed" as a result of the fire. There are numerous sources of uncertainty associated with this task, which is largely based on including many interpretations and judgments about limited experimental data, as well as actual fire events. For example:

- Whether the proper modeling objectives have been identified. Does the analyst need to address the level of toxic gases, as well as the room temperature? Should the analyst model the fire growth based primarily on oxygen levels in the immediate flame area, or by some other characteristic?;
- Whether the fire scenarios to be modeled sufficiently represent the fire risk profile of a compartment;
- Whether there is a proper technical representation of a compartment's characteristics (e.g., size, locations of doors and vents, etc.);
- Whether heat release rate profiles are appropriate based on limited empirical evidence and judgment;
- Whether target locations and the targets' thermophysical properties are appropriately defined;
- Whether the modeling tools selected for the analysis are the best for analyzing the fires and scenarios of interest.

V.1.11.2 Suggested Strategy

All of the above contribute to the overall uncertainty of whether the target failure probability is correct for the fire scenario examined in the Fire PRA model. As with Task 6, it is suggested that the procedure process-related uncertainties be addressed primarily by technical reviews, including walkdowns, where necessary, in an attempt to minimize these uncertainties. For parameters more directly associated with the calculated target failure probability, such as the heat release rates and target thermophysical properties, it is suggested these be expressed, to the extent possible, as distributions, so that they can be propagated through the analysis to arrive at a distribution for target failure probability. These distributions should be based on the variation of experimental results, as well as analyst judgment about interpreting the data including the effects of actual fire events. Hence, in summary, part of the overall uncertainty in the target failure probabilities is being explicitly handled during quantification, while other sources of uncertainty are not being quantified.

V.1.12 Task 12–Post-Fire Human Reliability Analysis

V.1.12.1 Uncertainty Issues

This task has the same uncertainties associated with any HRA characterized as including:

- Whether the modeling of the human failure events are sufficiently complete and appropriate for the fire scenarios modeled in the Fire PRA;
- Whether the screening rules and associated screening HEPs are reasonable and will not allow inadvertent screening out of potentially important HFEs and associated scenarios;
- Whether the detailed HRA analyses and subsequent HEPs have properly considered the important performance-shaping factors, especially considering the unique characteristics of fire-type scenarios, and used tools to adequately consider these factors; and
- Whether methods and tools suggest distributions/error bounds that should be used in the HEP estimates.

V.1.12.2 Suggested Strategy

It is suggested the process-related uncertainties above are best addressed using technical review as well as trial-and-error with regard to whether screening HFEs seems reasonable. The error bounds/distributions suggested by the particular HRA method/tool used should be propagated through the Fire PRA model using typical sampling techniques (e.g., Monte Carlo).

V.1.13 Task 13–Seismic-Fire Interactions

V.1.13.1 Uncertainty Issues

Since this is to be a qualitative evaluation, there are no quantitative assessments for which uncertainty distributions could be developed. Hence, the uncertainties associated with this task involve proper identification and evaluation of the possible seismic-fire interactions that could contribute to fire risk.

V.1.13.2 Suggested Strategy

Process-related uncertainties are best addressed by technical review. Other uncertainties as to the possible effects of these interactions, etc., should at least be qualitatively discussed as part of the this task's documentation.

V.1.14 Task 14–Fire Risk Quantification

Since this is just the finalization of what has already been performed during previous screening steps, but with the addition of the inputs from the later tasks (e.g., circuit failure analysis), it has the same uncertainties as Tasks 5 and 7, reflecting the additional uncertainties introduced by task inputs from the later tasks. Propagation of the various frequency and probability distributions from previous tasks is expected to produce uncertainty distributions on the CDFs/LERFs that are calculated. This quantified uncertainty accounts for only part of all the uncertainties that have been identified for all the above tasks.

V.1.15 Task 15–Uncertainty and Sensitivity Analysis

This task does not introduce any new uncertainties to the fire risk. It simply provides suggestions on how uncertainties in the other tasks should be treated.

V.1.16 Task 16–Fire PRA Documentation

This task does not introduce any new uncertainties to the fire risk. It does address the fact that documentation of what uncertainties have or have not been addressed, and how, should be part of the overall documentation effort.

V.2 Role of Sensitivity Analyses

When the tasks are being conducted, it is expected that sensitivity analyses may prove useful in determining what uncertainties should be addressed and how. For instance, if the location of a set of cables cannot be definitively determined, perhaps due to ambiguous plant documentation coupled with the inability to easily obtain access to the plant area and resolve the issue, it may be possible to perform preliminary analyses with the Fire PRA Model assuming the cables are or

are not present in the location. Depending on the perceived change in the fire risk, the importance of definitively determining the location can be ascertained. If not important, this uncertainty might not be addressed at all, and simply the worst-case assumption be used. If it is important, the uncertainty should be addressed in some quantitative or qualitative fashion (e.g., the results are "x" if the cables are not there; the results are "y" if the cables are there).

Sensitivity analyses could be used in *any* of the above tasks; i.e., sensitivity analyses are expected to be part of the analysis arsenal of tools used to determine which uncertainties are worthy of being addressed, as well as to provide insights as to how the uncertainty should be addressed (e.g., picking the worse-case model, applying two models each assigned a likelihood of being the correct model, using the worse-case value for a parameter estimate, etc.). To the extent the sensitivity analyses performed and the effects on the results of the Fire PRA are considered important to the proper use of the Fire PRA by decision-makers and future PRA analysts, it is important that these sensitivity analyses be part of the Fire PRA documentation. This is because they are further reflections as to the uncertainties in the analysis (be they modeling or parameter uncertainties), and hence it is important they be communicated as part of the results.

Appendix W

Appendix for Chapter 18, Sample Fire PRA Database Structure

W

APPENDIX FOR CHAPTER 18, SAMPLE FIRE PRA DATABASE STRUCTURE

This appendix provides a sample database structure for a standalone Fire PRA Database. The sample establishes one possible database structure that supports the functional criteria established in Support Task B. Included in the data structure are requisite data fields and relationships, data entry constraints, and data integrity logical checks (parent-child data relationships). The sample structure also ensures that data fields map to an input source, such as another task or plant database.

W.1 Database Structure and Relationships

The basic elements and functional criteria of the database include:

- Database structure (tables and table relationships),
- Essential fields for data tables,
- Data relationships and constraints, and
- Logical constraints for data integrity.

The Fire PRA Database will consist of a set of interrelated tables. The tables should be grouped into two categories:

1. **Analysis Tables**–The Analysis Tables are populated by the analyst as part of conducting Tasks 1, 2, 3, and 9. The primary tables contain information about boundaries and partitions, Fire PRA equipment, and Fire PRA cables. The database might also contain information about other fire protection systems and structural attributes, depending on the extent to which the database will capture these features. These tables are an output of analytical work to identify fire compartments, components, and cables of interest in the Fire PRA.

2. **Source Data Tables**–The Source Data Tables contain plant information and selection options that are used to expedite population of the Analysis Tables and generate sorts and queries.

Figures W-1 and W-2 show a recommended Fire PRA Database structure, including Analysis Tables, Source Data Tables (i.e., lookup tables), and data relationships. Establishing the correct data structure and relationships ensures that the database system contains the necessary functionality for constructing queries able to cascade fire-induced cable failures to equipment failures based on location.

The data fields highlighted in blue on Figures W-1 and W-2 represent the data needed to complete Tasks 1, 2, and 3. The remaining data fields support follow-on tasks and may be populated as appropriate based on the desired functionality of the database system. Note that descriptive information for the equipment and cable tables will be necessary to support detailed electrical failure analysis under Task 9. The solid lines in Figures W-1 and W-2 represent constrained relationships for data, generally one-to-many relationships. The dotted lines depict lookup list options.

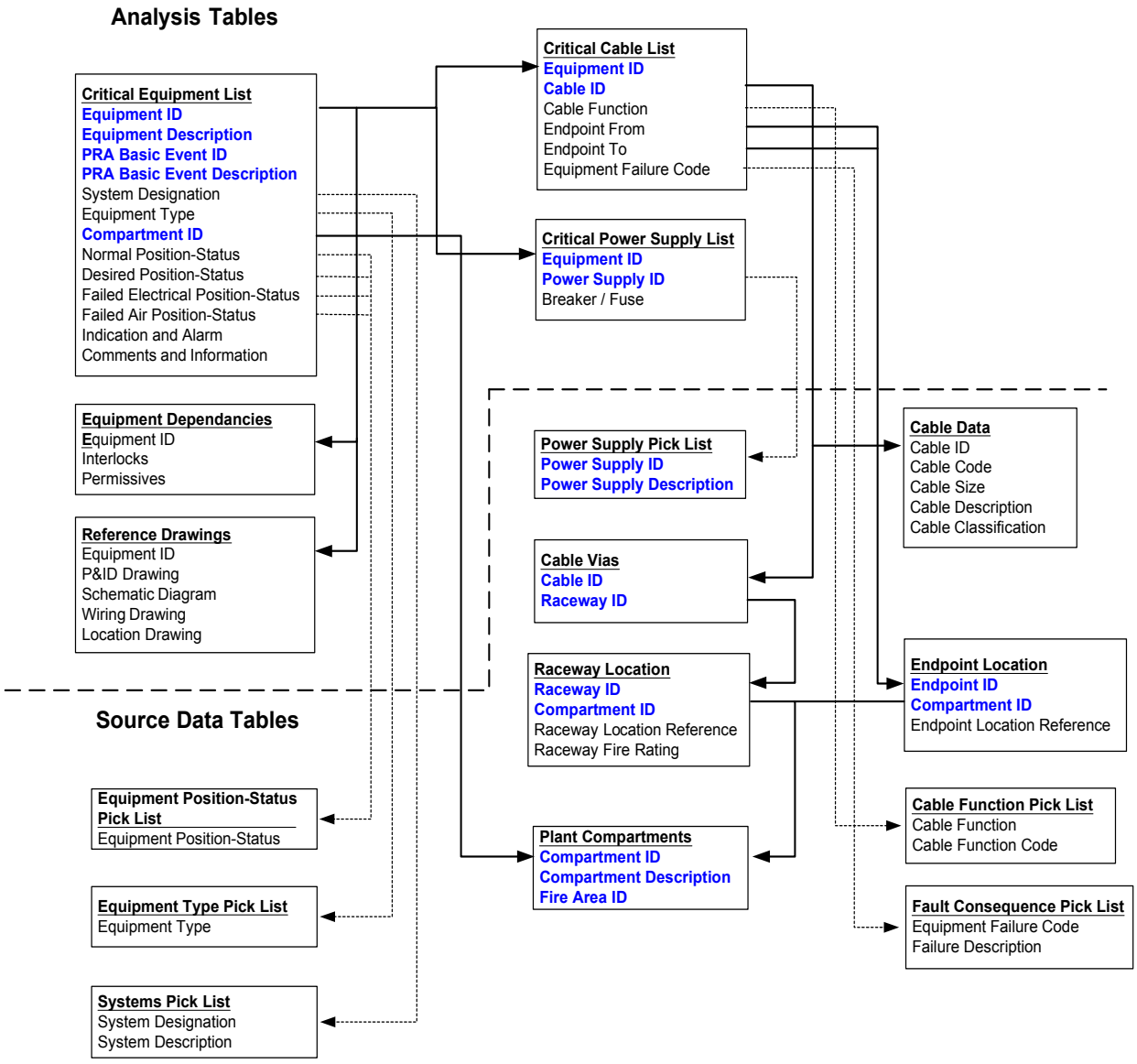

Figure W-1
Fire PRA Database Structure–Equipment and Cables

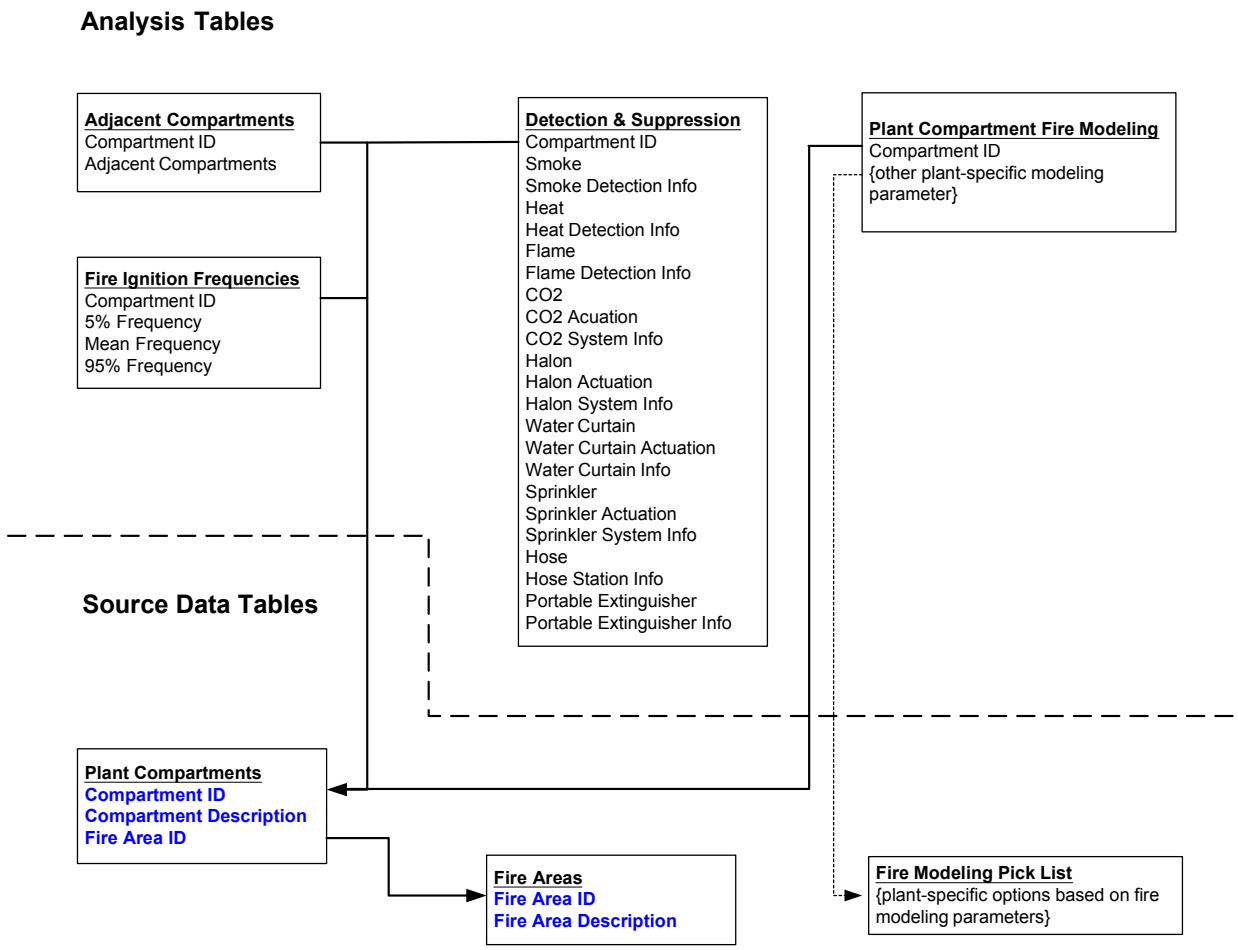

Figure W-2
Fire PRA Database Structure–Compartment, Areas, and Fire Protection

W.2 Source Data Table Constraints and Data Integrity Logical Requirements

Selection options for the source data lookup tables should be established. Data lookup tables are used to expedite data entry and force consistency in sortable fields. Consistency and preciseness of data entry terms are an important elements in assuring the database produces accurate and complete results for queries and sorts. For example, it might be desirable to identify all valves in an area that could spuriously reposition. If the database does not capture this failure mode for all valves using identical terminology, it is possible than some valves might not be flagged as a spurious operation (SO) concern. In summary, consistency in format for sortable fields is important to ensuring data queries do not overlook a record because of inconsistent data entry.

Preliminary lookup table options are provided in Table W-1. These options should be modified and adjusted to suit the plant-specific analysis.

Table W-1
Fire-PRA Database Lookup Table Options

Table Name	Table Field	Options
Equipment Positions-Status Pick List	Equipment Position-Status	On Off Open Closed Throttled Cycle Available Energized Deenergized Running Stopped
Equipment Type Pick List	Equipment Type	Motor operated valve Air operated valve Solenoid valve Manual valve Hydraulic valve Check valve Air-operated damper Motor-operated damper Pump Instrument Heater Fan Switchgear Load center Motor Control Center Distribution Panel Generator Battery Battery charger Inverter Cooler Chiller AC unit Tank Compressor
Systems Pick List	System Designation System Description	Plant-specific designations Plant-specific designations
Power Supply Pick List	Power Supply ID Power Supply Description	Plant-specific designations Plant-specific designations

Table W-1
Fire-PRA Database Lookup Table Options (Continued)

Table Name	Table Field	Options
Plant Compartments	Compartment ID Compartment Description Fire Area ID	Task 1 input Task 1 input Task 1 input
Fire Areas	Fire Area ID Fire Area Description	Task 1 input Task 1 input
Cable Function Pick List	Cable Function Cable Function Code	Power Control Instrument Auxiliary Spare P C I A S
Fault Consequence Pick List	Equipment Failure Code Failure Description	FO FC LOP LOC LOI-H LOI-L NC SO Fail Open Fail Closed Loss of Power Loss of Control Loss of Indication – Fail High Loss of Indication – Fail Low Erroneous Indication No Consequence Spurious Operation
Fire Modeling Pick List	Plant specific parameters	Plant-specific parameters

W.3 Data Integrity Rules and Logical Constraints

Maintaining data integrity is critical to the long-term viability of the Fire PRA Database. Over time, data quality and consistency will degrade if proper rules and constraints are not established for data entry and storage. The following rules and constraints are suggested:

- The Fire PRA Equipment List table fields should only contain options from the appropriate lookup table.
- The Fire PRA Cable List table should be capable of accommodating multiple entries of a single cable so that a cable can be associated with more than one component when appropriate.
- The Fire PRA Cable List table fields containing lookup menus should only contain options from the appropriate pick list table.
- The Fire Compartments and fire area table options should be limited to selections identified by Task 1.
- The Cable Vias Table should only reference raceways listed in the raceway location table.
- The raceway location table should only reference plant fire compartments listed in the Fire Compartments Table.
- The fire compartments table should only reference fire areas listed in the fire areas table.
- Database parent-child relations should be maintained so that flow-down deletes are active.

W.4 Mapping Data Fields to Task Activities

Source data should be mapped to the data fields in the database to ensure efficient and complete data collection. Task activities pertaining to data collection and entry should be aligned with the database to accomplish this goal. The following checks should be accomplished to ensure efficient and complete mapping of source data to the database:

- Confirm implementing procedures for Tasks 1, 2, 3, and 9 include adequate methods for collecting and inputting the necessary data into the appropriate data tables.
- Compare data structure and formats of source and destination data tables in preparation for uploading essential cable-to-raceway information into the cable vias table. This activity is simple in concept, but may demand a significant effort, depending on the form and compatibility of the source data.
- Determine the form of source data for uploading raceway-to-compartment information into the raceway location table. This step may involve a data transfer from another database or manual input, depending on the availability of data.
- Confirm appropriate options for lookup tables.

NRC FORM **335**
(2-89)
NRCM 1102,
3201, 3202

U.S. NUCLEAR REGULATORY COMMISSION

BIBLIOGRAPHIC DATA SHEET

(See instructions on the reverse)

1. REPORT NUMBER
(Assigned by NRC, Add Vol., Supp., Rev., and Addendum Numbers, if any.)

NUREG/CR-6850
Vol. 2

2. TITLE AND SUBTITLE

EPRI/NRC-RES Fire PRA Methodology for Nuclear Power Facilities

Volume 2: Detailed Methodology

3. DATE REPORT PUBLISHED

MONTH	YEAR
October	2004

4. FIN OR GRANT NUMBER

Y6037

5. AUTHOR(S)

S. P. Nowlen, F. J. Wyant, J. Forester, M. Kazarians, A. Kolaczkowski, B. Najafi, F. Joglar, D. Funk, G. Hannaman, R. Anoba

6. TYPE OF REPORT

Technical

7. PERIOD COVERED *(Inclusive Dates)*

8. PERFORMING ORGANIZATION - NAME AND ADDRESS *(If NRC, provide Division, Office or Region, U.S. Nuclear Regulatory Commission, and mailing address; if contractor, provide name and mailing address.)*

Sandia National Laboratory
P.O. Box 5800
Albuquerque, NM 87185-0744

Science Applications International Corporation
4920 El Camino Real
Los Altos, CA 94022

9. SPONSORING ORGANIZATION - NAME AND ADDRESS *(If NRC, type "Same as above"; if contractor, provide NRC Division, Office or Region, U.S. Nuclear Regulatory Commission, and mailing address.)*

Division of Risk Analysis and Applications
Office of Nuclear Regulatory Research
U.S. Nuclear Regulatory Commission
Washington, D.C. 20555

Electric Power Research Institute
3412 Hillview Avenue
Palo Alto, CA 94303

10. SUPPLEMENTARY NOTES

NRC Project Manager, J.S. Hyslop

EPRI Project Manager, Robert P. Kassawara

11. ABSTRACT *(200 words or less)*

This report documents state-of-art methods, tools, and data for the conduct of a fire Probabilistic Risk Assessment (PRA) for a commercial nuclear power (NPP) application. This report is intended to serve the needs of a fire risk analysis team by providing a structured framework for conduct of the overall analysis, as well as specific practices to address each key aspect of the analysis. The methods have been developed under the Fire Risk Requantification Study. This study was conducted as a joint activity between the Electric Power Research Institute (EPRI) and the U.S. Nuclear Regulatory Commission (NRC) Office of Nuclear Regulatory Research (RES) under the terms of an NRC/EPRI Memorandum of Understanding on Cooperative Nuclear Safety Research and an accompanying Fire Risk Addendum. Participants from the U.S. nuclear power industry supported demonstration analyses and provided peer review of this methodology. Methodological issues raised in past fire risk analyses, including the Individual Plant Examination of External Events (IPEEE) fire analyses, have been addressed to the extent allowed by the current state-of-art and the overall project scope. While the primary objective of the project was to consolidate existing state-of-art methods, the newly documented methods represent a significant advancement over previously documented methods in many areas.

12. KEY WORDS/DESCRIPTORS *(List words or phrases that will assist researchers in locating the report.)*

Fire, Fire Risk, Risk Analysis, Probabilistic Risk Assessment, PRA, Probabilistic Safety Assessment, PSA, Risk-Informed Regulation, Performance-Based, Fire Protection, Fire Safety

13. AVAILABILITY STATEMENT

unlimited

14. SECURITY CLASSIFICATION

(This Page)

unclassified

(This Report)

unclassified

15. NUMBER OF PAGES

16. PRICE

This form was electronically produced by Elite Federal Forms, Inc.

Printed
on recycled
paper

Federal Recycling Program

About EPRI

EPRI creates science and technology solutions for the global energy and energy services industry. U.S. electric utilities established the Electric Power Research Institute in 1973 as a nonprofit research consortium for the benefit of utility members, their customers, and society. Now known simply as EPRI, the company provides a wide range of innovative products and services to more than 1000 energy-related organizations in 40 countries. EPRI's multidisciplinary team of scientists and engineers draws on a worldwide network of technical and business expertise to help solve today's toughest energy and environmental problems.

EPRI. Electrify the World

Export Control Restrictions

Access to and use of EPRI Intellectual Property is granted with the specific understanding and requirement that responsibility for ensuring full compliance with all applicable U.S. and foreign export laws and regulations is being undertaken by you and your company. This includes an obligation to ensure that any individual receiving access hereunder who is not a U.S. citizen or permanent U.S. resident is permitted access under applicable U.S. and foreign export laws and regulations. In the event you are uncertain whether you or your company may lawfully obtain access to this EPRI Intellectual Property, you acknowledge that it is your obligation to consult with your company's legal counsel to determine whether this access is lawful. Although EPRI may make available on a case by case basis an informal assessment of the applicable U.S. export classification for specific EPRI Intellectual Property, you and your company acknowledge that this assessment is solely for informational purposes and not for reliance purposes. You and your company acknowledge that it is still the obligation of you and your company to make your own assessment of the applicable U.S. export classification and ensure compliance accordingly. You and your company understand and acknowledge your obligations to make a prompt report to EPRI and the appropriate authorities regarding any access to or use of EPRI Intellectual Property hereunder that may be in violation of applicable U.S. or foreign export laws or regulations.

UNITED STATES NUCLEAR REGULATORY COMMISSION

Washington, DC 20555-0001

NUREG/CR-6850

© 2004 Electric Power Research Institute (EPRI), Inc. All rights reserved. Electric Power Research Institute and EPRI are registered service marks of the Electric Power Research Institute, Inc. EPRI. ELECTRIFY THE WORLD is a service mark of the Electric Power Research Institute, Inc.

1008239

Printed on recycled paper in the United States of America

EPRI • 3412 Hillview Avenue, Palo Alto, California 94304 • PO Box 10412, Palo Alto, California 94303 • USA
800.313.3774 • 650.855.2121 • askepri@epri.com • www.epri.com