Pacific Gas and
Electric Company

David H. Oatley
Vice President and
General Manager

Diablo Canyon Power Plant
P.O. Box 56
Avila Beach, CA 93424

805.545.4350
Fax: 805.545.4234

September 20, 2004

PG&E Letter DCL-04-119

U.S. Nuclear Regulatory Commission
ATTN: Document Control Desk
Washington, DC 20555-0001

Docket No. 50-275, OL-DPR-80
Diablo Canyon Unit 1
Licensee Event Report 1-2004-002-00
Technical Specification (TS) 3.0.3 Required Shutdown Due to TS 3.7.7, "Vital CCW System," Limiting Condition for Operation (LCO) Not Met

Dear Commissioners and Staff:

In accordance with 10 CFR 50.73(a)(2)(i)(A) and 10 CFR 50.73(a)(2)(i)(B), PG&E is submitting the enclosed licensee event report regarding the completion of a TS 3.0.3 required shutdown due to not meeting the LCO requirement of TS 3.7.7, Vital Component Cooling Water System.

This event did not adversely affect the health and safety of the public.

Sincerely,

David H. Oatley

ddm/2246/N0002186
Enclosure
cc: Bruce S. Mallett
David L. Proulx
Girija S. Shukla
INPO
Diablo Distribution

IE22

NRC FORM 366 (6-2004) U.S. NUCLEAR REGULATORY COMMISSION

APPROVED BY OMB: NO. 3150-0104 EXPIRES: 06/30/2007

Estimated burden per response to comply with this mandatory collection request: 50 hours. Reported lessons learned are incorporated into the licensing process and fed back to industry. Send comments regarding burden estimate to the Records and FOIA/Privacy Service Branch (T-5 F52), U.S. Nuclear Regulatory Commission, Washington, DC 20555-0001, or by internet e-mail to infocollects@nrc.gov, and to the Desk Officer, Office of Information and Regulatory Affairs, NEOB-10202, (3150-0104), Office of Management and Budget, Washington, DC 20503. If a means used to impose an information collection does not display a currently valid OMB control number, the NRC may not conduct or sponsor, and a person is not required to respond to, the information collection.

LICENSEE EVENT REPORT (LER)

(See reverse for required number of digits/characters for each block)

1. FACILITY NAME	2. DOCKET NUMBER	3. PAGE
Diablo Canyon Unit 1	05000275	1 OF 8

4. TITLE
TS 3.0.3 Required Shutdown Due to TS 3.7.7, "Vital CCW System," Limiting Condition for Operation Not Met

5. EVENT DATE			6. LER NUMBER			7. REPORT DATE			8. OTHER FACILITIES INVOLVED	
MONTH	DAY	YEAR	YEAR	SEQUENTIAL NUMBER	REV NO.	MONTH	DAY	YEAR	FACILITY NAME	DOCKET NUMBER
										05000
07	21	2004	2004	- 002 -	00	09	20	2004	FACILITY NAME	DOCKET NUMBER 05000

9. OPERATING MODE: 1

10. POWER LEVEL: 100

11. THIS REPORT IS SUBMITTED PURSUANT TO THE REQUIREMENTS OF 10 CFR§: *(Check all that apply)*

☐ 20.2201(b)	☐ 20.2203(a)(3)(i)	☐ 50.73(a)(2)(i)(C)	☐ 50.73(a)(2)(vii)
☐ 20.2201(d)	☐ 20.2203(a)(3)(ii)	☐ 50.73(a)(2)(ii)(A)	☐ 50.73(a)(2)(viii)(A)
☐ 20.2203(a)(1)	☐ 20.2203(a)(4)	☐ 50.73(a)(2)(ii)(B)	☐ 50.73(a)(2)(viii)(B)
☐ 20.2203(a)(2)(i)	☐ 50.36(c)(1)(i)(A)	☐ 50.73(a)(2)(iii)	☐ 50.73(a)(2)(ix)(A)
☐ 20.2203(a)(2)(ii)	☐ 50.36(c)(1)(ii)(A)	☐ 50.73(a)(2)(iv)(A)	☐ 50.73(a)(2)(x)
☐ 20.2203(a)(2)(iii)	☐ 50.36(c)(2)	☐ 50.73(a)(2)(v)(A)	☐ 73.71(a)(4)
☐ 20.2203(a)(2)(iv)	☐ 50.46(a)(3)(ii)	☐ 50.73(a)(2)(v)(B)	☐ 73.71(a)(5)
☐ 20.2203(a)(2)(v)	☒ 50.73(a)(2)(i)(A)	☐ 50.73(a)(2)(v)(C)	☐ OTHER
☐ 20.2203(a)(2)(vi)	☒ 50.73(a)(2)(i)(B)	☐ 50.73(a)(2)(v)(D)	Specify in Abstract below or in NRC Form 366A

12. LICENSEE CONTACT FOR THIS LER

FACILITY NAME	TELEPHONE NUMBER (Include Area Code)
Lawrence M. Parker – Senior Regulatory Services Engineer	(805) 545- 3386

13. COMPLETE ONE LINE FOR EACH COMPONENT FAILURE DESCRIBED IN THIS REPORT

CAUSE	SYSTEM	COMPONENT	MANU-FACTURER	REPORTABLE TO EPIX	CAUSE	SYSTEM	COMPONENT	MANU-FACTURER	REPORTABLE TO EPIX
E	BI	PSX	944S	Yes					

14. SUPPLEMENTAL REPORT EXPECTED		15. EXPECTED SUBMISSION DATE	MONTH	DAY	YEAR
☐ YES *(If yes, complete 15. EXPECTED SUBMISSION DATE)*	☒ NO				

ABSTRACT *(Limit to 1400 spaces, i.e., approximately 15 single-spaced typewritten lines)*

On July 21, 2004, with Unit 1 in Mode 1 (Power Operation) at approximately 100 percent power, a nonvital component cooling water (CCW) leak was identified. PG&E licensed plant operators conservatively concluded that the leak could potentially disable both vital CCW loops, thus the limiting condition for operation (LCO) for Technical Specification (TS) 3.7.7, "Vital CCW System," was not met. Plant operators entered TS 3.0.3 at 1900 PDT, and a Unit 1 forced shutdown was commenced at 2020 PDT. At 2157 PDT plant operators made a nonemergency event notification (EN #40890) in accordance with 10 CFR 50.72(b)(2)(i).

On July 22, 2004, at 0033 PDT, following reactor coolant pump (RCP) 1-3 upper bearing lube oil cooler isolation, TS 3.0.3 was exited. On July 23, 2004, at 1432 PDT, following RCP 1-3 upper bearing lube oil cooler channel head replacement, TS 3.7.7 was exited.

The cause of this event was high cycle fatigue cracking of the CCW supply pipe nozzle at the RCP 1-3 upper bearing lube oil cooler channel head. Contributory causes include the cooler channel head was in operation at or near the piping resonant frequency. Corrective action to prevent recurrence includes moving the natural frequency off-resonance (away from 20 Hz).

TEXT

I. Plant Conditions

Unit 1 was in Mode 1 (Power Operation) at 100 percent reactor power.

II. Description of Problem

A. Background

The component cooling water (CCW) System [BI] provides a heat sink for the removal of process and operating heat from safety-related and nonsafety-related components during a design basis accident (DBA) or transient. During normal operation, the CCW System provides this function for safety-related components, various nonessential components, and the spent fuel storage pool [DA]. The CCW System serves as a barrier to the release of radioactive byproducts between potentially radioactive systems and the Auxiliary Saltwater (ASW) System [BS], and thus to the environment.

The CCW System consists of three CCW pumps powered from separate vital buses, two CCW heat exchangers, and a shared CCW surge tank with a divider plate. The piping system consists of three normally cross-tied headers. The headers extend from the outlet of the heat exchangers, through the header heat loads (components), to the suction of the CCW pumps.

The two vital headers serve redundant engineered safety feature (ESF) loads. A third, nonvital header serves nonvital equipment. Only one ASW pump and one CCW heat exchanger are required, as assumed in the safety analysis, to provide sufficient heat removal from containment to mitigate a design basis accident. However, to ensure maximum heat removal capability, operators are instructed to place the second CCW heat exchanger in service early in the emergency operating procedures.

Each of the vital headers is separable from the others to mitigate a passive single failure during post loss-of-coolant-accident (LOCA) long term cooling. The divided surge tank is connected to the vital header return piping and is sized to meet system leakage requirements and maintain adequate net positive suction head (NPSH) on system pumps. In the event that CCW system leakage occurs and system makeup is not available, the surge tank volume provides a minimum of 20 minutes, based on a nonmechanistic leakage rate of 200 gallons per minute (gpm), for operators to locate and isolate the leak or separate the CCW system into separate loops before the system becomes impaired due to water loss

TEXT

as discussed in Supplemental Safety Evaluation Report (SSER) 16, which did not credit automatic or manual CCW makeup to mitigate a CCW system leak.

For a graphical representation of the CCW System, refer to Figure 1. Additional information on the design and operation of the system, along with a list of the components served, is presented in the Final Safety Analysis Report, Section 9.2.2, "Component Cooling Water System."

Technical Specification (TS) 3.7.7, "Vital CCW System," Limiting Condition for Operation (LCO) requires; "Two vital CCW loops shall be OPERABLE." With "One vital CCW loop inoperable," and the "Required Action and associated Completion Time of Condition A not met," the unit will "Be in MODE 3 (in) 6 hours AND Be in Mode 5 (in) 36 hours." TS 3.7.7 does not specify an LCO for two vital CCW loops inoperable.

TS 3.0.3 requires that; "When an LCO is not met and the associated ACTIONS are not met, an associated ACTION is not provided, or if directed by the associated ACTIONS, the unit shall be placed in a MODE or other specified condition in which the LCO is not applicable. Action shall be initiated within 1 hour to place the unit, as applicable, in:

a. MODE 3 within 7 hours;
b. MODE 4 within 13 hours; and
c. MODE 5 within 37 hours."

Previously on December 16, 1998, the reactor coolant pump (RCP) 1-3 upper bearing lube oil cooler channel head failed due to a crack in the channel head at the toe of the weld connecting the nozzle to the shell resulting in an orderly manual shutdown of Unit 1 to repair. The failure was due to high cycle fatigue cracking of the channel head. The immediate solution was to replace the channel head and change the modal response of the piping so as to detune it from the pump frequency of approximately 20 Hz. Analysis calculation 4A-125 supports the addition of a 45-pound, plus or minus 5 percent, mass firmly affixed to line 1-K-136-4. The longer-term solution was to replace the channel head with new, reinforced channel heads as part of the 10-year RCP maintenance program.

In May of 2002, during Unit 1 eleventh refueling outage (1R11), the upper bearing lube oil cooler channel head for RCP 1-3 was replaced as part of the 10-year RCP motor preventive maintenance program.

Component Cooling Water System

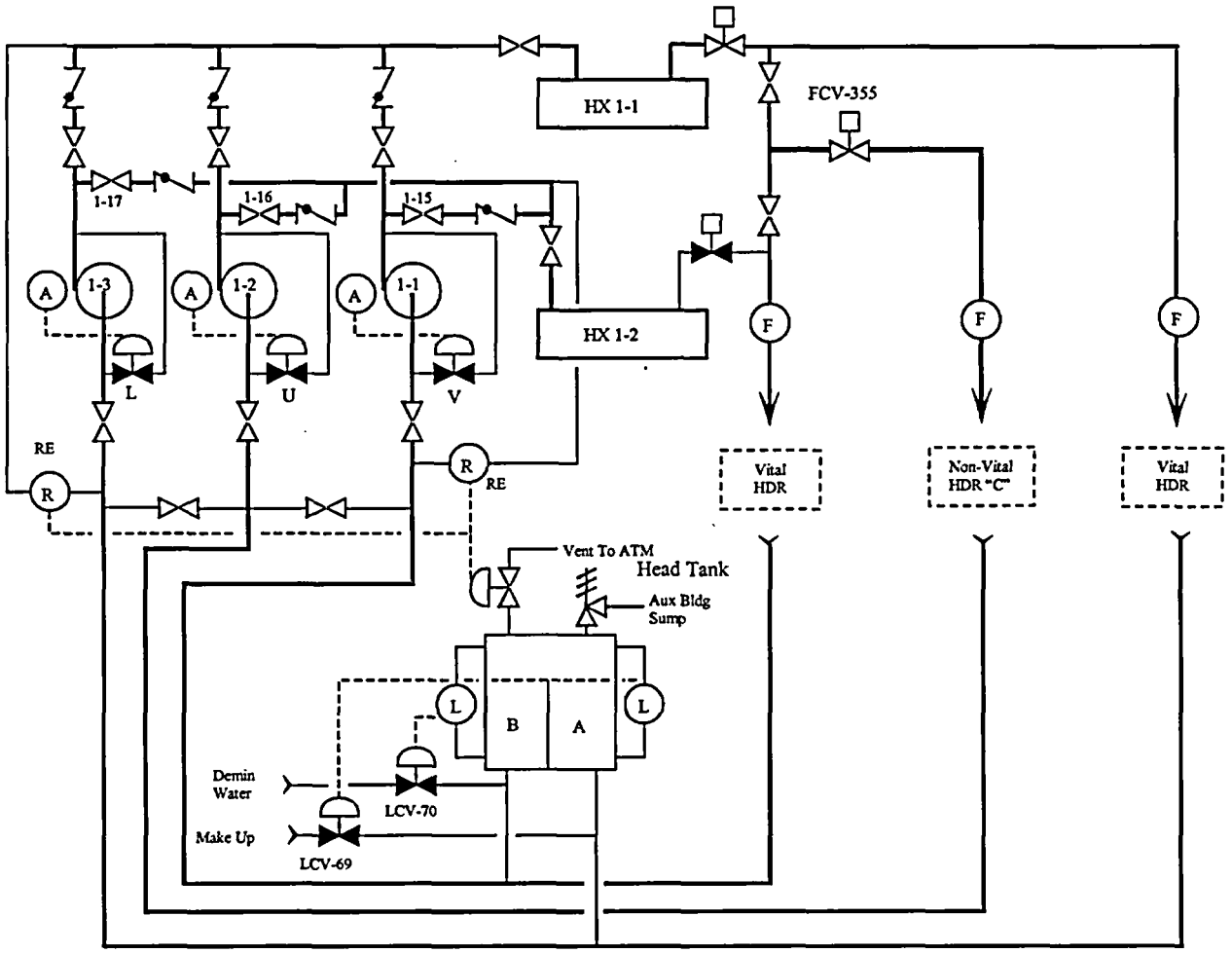

Figure 1

B. Event Description

On July 21, 2004, leakage was detected by increasing containment sump level. The leak rate was estimated to be approximately 0.13 gpm. Utility personnel entered containment and discovered a cracked joint on the 3-inch CCW piping. The maximum leak, if the CCW pipe completely sheared off, was conservatively assumed to be greater than 200 gpm. The maximum analyzed leak rate for the CCW system is approximately 200-gpm leak, as stated in the Final Safety Analysis Report Update.

TEXT

On July 21, 2004, at 1900 PDT, based on the potential for the condition to rapidly degrade under loading such as a seismic event, PG&E licensed plant operators conservatively declared TS 3.7.7 not met, entered TS 3.0.3, and initiated a Unit 1 shutdown at 2020 PDT.

On July 21, 2004, at 2157 PDT, plant operators made a nonemergency event notification (EN #40890) in accordance with 10 CFR 50.72(b)(2)(i), for the required shutdown due to a nonvital CCW leak inside containment.

On July 22, 2004, at 0033 PDT, Unit 1 entered Mode 3, the lube oil cooler isolated, and TS 3.0.3 was exited.

On July 23, 2004, at 1432 PDT, following RCP 1-3 lube oil cooler replacement TS 3.7.7 was exited.

On July 23, 2004, at 1546 PDT Unit 1 entered Mode 2.

On July 24, 2004, at 0104 PDT Unit 1 entered Mode 1.

On July 24, 2004, at 0257 PDT plant operators paralleled Unit 1 main generator to the grid.

C. Status of Inoperable Structures, Systems, or Components that Contributed to the Event

None.

D. Other Systems or Secondary Functions Affected

None.

E. Method of Discovery

Utility licensed plant operators in the control room during routine observations responded to rising sump level indications and initiated an investigation that identified the leakage location.

F. Operator Actions

Utility licensed plant operators evaluated the identified leakage location and questioned the capability of compliance with the Final Safety Analysis Report (FSAR) Update maximum 200-gpm leak rate evaluation in the

TEXT

event of an earthquake. Based upon questionable compliance with design basis leak rate capability, plant operators conservatively entered TS 3.7.7 and TS 3.0.3 and performed an orderly manual shutdown.

G. Safety System Responses

All safety systems, including the emergency diesel generators were fully operable and the offsite electrical grid was stable during the shutdown.

III. Cause of the Problem

A. Immediate Cause

High cycle fatigue failure at the nozzle connection of the CCW supply piping to the RCP 1-3 upper bearing lube oil cooler channel head.

B. Root Cause

Component replacement of the RCP upper bearing lube oil cooler channel head with a reinforced (stiffer) connection resulted in the piping system being closer to the resonant frequency (20 Hz) resulting in fatigue failure.

C. Contributory Cause

1. Previous nonconformance report (NCR) corrective action was not maintained, i.e., action(s) for a fatigue tolerant weld profile was not maintained for the new heads. The weld quality was a contributor in increasing stress levels (locally).

2. Previous NCR corrective action was not adequately maintained, i.e., action(s) to maintain a margin between the RCP forcing frequency and the resonant frequency of the piping system was not maintained.

IV. Assessment of Safety Consequences

The CCW System is required to provide cooling to safety-related components to assure that they are capable of performing their required functions following an accident. As previously described, the CCW System consists of normally cross-tied vital and nonvital headers. The headers can be isolated from each other within 20 minutes following an assumed CCW leak of 200 gpm, as discussed in SSER 16.

TEXT

Had a 200 gpm or greater leak occurred in header C, and makeup was not available, the leakage would have been terminated when the header C isolation valves were closed. Left uncorrected, the ongoing leakage could result in a loss of the CCW function.

However, a subsequent calculation using seismic stresses and the as-found condition shows the pipe would not have catastrophically failed.

Therefore, the event is not considered risk significant and it did not adversely affect the health and safety of the public.

Also, the condition is not considered a Safety System Functional Failure.

V. Corrective Actions

A. Immediate Corrective Actions

- Licensed plant operators entered TS 3.0.3 and initiated shutdown
- RCPs were shut down
- CCW flow to the lube oil cooler was isolated and TS 3.0.3 exited
- Nondestructive examination inspection of similar Unit 1 RCP lube oil cooler piping was performed with no flaw indications identified
- RCP vibration monitoring was performed that found vibration levels on other RCPs were lower than RCP 1-3.
- RCP 1-3 lube oil cooler channel head was replaced with a new fatigue resistant weld configuration
- Visual inspection of the Unit 2 connections and lines was performed

B. Corrective Actions to Prevent Recurrence

Move the piping natural frequency off-resonance (i.e., away from a 20hz natural frequency).

VI. Additional Information

A. Failed Components

Component: RCP upper bearing lube oil cooler
Supplier: Westinghouse Electric Co.
Manufacturer: Senior Engineering Company

TEXT

B. Previous Similar Events

LER 1-2000-009-00, "Component Cooling Water Valves Would Not Close Properly due to Misadjusted Travel Stops – Personnel Error," reported outside design basis due to misadjusted travel stops – personnel error. Corrective action to prevent recurrence includes requiring maintenance verification testing for similar valves to ensure the travel stops are left properly adjusted after maintenance. Corrective actions to prevent recurrence would not have prevented this event as it involved actions regarding valve maintenance only.

NCR N0002080, "Unit One Plant Shutdown due to CCW Leak on RCP 1-3," documents "a [previous] through-wall leak, adjacent to the channel head nozzle weld for the CCW supply to the upper bearing cooler for RCP 1-3, [that] resulted in the curtailment of DCPP Unit 1 and replacement of the cracked channel head." The corrective actions taken as a result of the previous event were ineffective in preventing this event.