Attachment 3

UNITED STATES
NUCLEAR REGULATORY COMMISSION
WASHINGTON, D.C. 20555-0001

September 15, 2004

Mr. Stephen D. Floyd
Vice President, Regulatory Affairs
Nuclear Generation Division
Nuclear Energy Institute
1776 I Street, NW, Suite 400
Washington, D.C. 20006-3708

Dear Mr. Floyd:

As you are aware, the staff and industry have been working for over two years on a replacement for the Safety System Unavailability (SSU) performance indicator (PI). Its proposed replacement, the Mitigating Systems Performance Index (MSPI), is a risk-informed PI that sums and averages risk from the unavailability and unreliability of a system over a three year period of time.

In SECY 04-0053, "Reactor Oversight Process Self-Assessment for Calendar Year 2003," dated April 6, 2004, the staff outlined a number of advantages and disadvantages with the MSPI. The issues were further discussed with external stakeholders during a public Reactor Oversight Process (ROP) Working Group meeting on April 22, 2004. One of the issues discussed was the proposed elimination of the significance determination process (SDP) for areas covered by MSPI. Following the April 22, 2004, public meeting, the industry agreed to the Nuclear Regulatory Commission (NRC) staff's position to retain the SDP with MSPI implementation. This significant change allowed the staff to reassess the other issues outlined in SECY-04-0053. As a result of this reassessment, the staff concluded that many of the issues were reduced in significance or deemed non-critical to moving forward with MSPI implementation.

During the August 19, 2004, ROP Working Group meeting, the staff and industry reached agreement on the two remaining issues with the MSPI, and the staff agreed to move forward with MSPI implementation. As part of that agreement, the staff and industry agreed to define the minimum probabilistic risk assessment characteristics needed for MSPI implementation, and have established a task group for this purpose.

The staff expects that the MSPI temporary instruction, which will be conducted to ensure industry readiness, will be completed for all plants, and significant findings satisfactorily resolved prior to full implementation. As discussed during the August 19, 2004, meeting, in order to fully implement MSPI, all plants will need to implement MSPI on the agreed upon implementation start date; there will be no partial or delayed implementation.

As requested by the Nuclear Energy Institute, this letter confirms the NRC commitment to implement MSPI, as discussed above.

Sincerely,

J. E. Dyer, Director
Office of Nuclear Reactor Regulation

APPENDIX F

METHODOLOGIES FOR COMPUTING THE UNAVAILABILITY INDEX, THE UNRELIABILITY INDEX AND SYSTEM RELIABILITY LIMITS

This appendix provides the details of three calculations: the System Unavailability Index, the System Unreliability Index, and system component unreliability limits .

1. System Unavailability Index (UAI) Due to Train Unavailability

Unavailability is monitored at the train level for the purpose of calculating UAI. The process for calculation of the System Unavailability Index has three major steps:

- Identification of system trains
- Collection of plant data
- Calculation of UAI

The first of these steps is performed once for the initial setup of the index calculation. The second step has some parts that are performed initially and then only performed again when a revision to the plant specific PRA is made or changes are made to the normal preventive maintenance practices. Other parts of the calculation are performed periodically to obtain the data elements reported to the NRC. This section provides the detailed guidance for the calculation of UAI.

1.1. Identification of System Trains

The identification of system trains is accomplished in two steps:

- Determine the system boundaries
- Identify the trains within the system

The use of simplified P&IDs can be used to document the results of this step and will also facilitate the completion of the directions in section 2.1.1 later in this document.

1.1.1. System Boundaries

The first step in the identification of system trains is to define the system boundaries. Include all components that are required to satisfy the risk-significant functions of the system. For fluid systems the boundary should extend from the water source (e.g., tanks, sumps, etc.) to the injection point (e.g., RCS, Steam Generators). For example, high-pressure injection may have both an injection mode with suction from the refueling water storage tank and a recirculation mode with suction from the containment sump. For Emergency AC systems, the system consists of all class 1E generators at the station.

Additional system specific guidance on system boundaries can be found in section 5 titled "Additional Guidance for Specific Systems" at the end of this appendix.

Some common conditions that may occur are discussed below.

Component Interface Boundaries

For water connections from systems that provide cooling water to a single monitored component, only the final connecting valve is included in the boundary. For example, for service water that provides cooling to support an AFW pump, only the final valve in the service water system that supplies the cooling water to the AFW system is included in the AFW system scope. This same valve is not included in the cooling water support system scope.

Water Sources and Inventory

Water tanks are not considered to be monitored components. As such, they do not contribute to URI. However, periods of insufficient water inventory contribute to UAI if they result in loss of the risk-significant train function for the required mission time. Water inventory can include operator recovery actions for water make-up provided the actions can be taken in time to meet the mission times and are modeled in the PRA. If additional water sources are required to satisfy train mission times, only the connecting active valve from the additional water source is considered as a monitored component for calculating UAI. If there are valves in the primary water source that must change state to permit use of the additional water source, these valves are considered monitored and should be included in UAI for the system.

Common Components

Some components in a system may be common to more than one system, in which case the unavailability of a common component is included in all affected systems. (However, see "Additional Guidance for Specific Systems" for exceptions; for example, the PWR High Pressure Safety Injection System.)

1.1.2. Identification of Trains within the System

Each monitored system shall then be divided into trains to facilitate the monitoring of unavailability.

A train consists of a group of components that together provide the risk significant functions of the system as explained in the "additional guidance for specific mitigating systems". Fulfilling the risk-significant function of the system may require one or more trains of a system to operate simultaneously. The number of trains in a system is generally determined as follows:

- for systems that provide cooling of fluids, the number of trains is determined by the number of parallel heat exchangers, or the number of parallel pumps, or the minimum number of parallel flow paths, whichever is fewer.
- for emergency AC power systems the number of trains is the number of class 1E emergency (diesel, gas turbine, or hydroelectric) generators at the station that are installed to power shutdown loads in the event of a loss of off-site power. (This does not include the diesel generator dedicated to the BWR HPCS system, which is included in the scope of the HPCS system.)

Some components or flow paths may be included in the scope of more than one train. For example, one set of flow regulating valves and isolation valves in a three-pump, two-steam generator system are included in the motor-driven pump train with which they are electrically associated, but they are also included (along with the redundant set of valves) in the turbine-driven pump train. In these instances, the effects of unavailability of the valves should be reported in both affected trains. Similarly, when two trains provide flow to a common header, the effect of isolation or flow regulating valve failures in paths connected to the header should be considered in both trains.

Additional system specific guidance on train definition can be found in section 5 titled "Additional Guidance for Specific Systems" at the end of this appendix.

Additional guidance is provided below for the following specific circumstances that are commonly encountered:

- Cooling Water Support System Trains
- Swing Trains and Components Shared Between Units
- Maintenance Trains and Installed Spares

Cooling Water Support Systems and Trains

The cooling water function is typically accomplished by multiple systems, such as service water and component cooling water. A separate value for UAI will be calculated for each of the systems in this indicator and then they will be added together to calculate an overall UAI value.

In addition, cooling water systems are frequently not configured in discrete trains. In this case, the system should be divided into logical segments and each segment treated as a train. This approach is also valid for other fluid systems that are not configured in obvious trains. The way these functions are modeled in the plant-specific PRA will determine a logical approach for train determination. For example, if the PRA modeled separate pump and line segments (such as suction and discharge headers), then the number of pumps and line segments would be the number of trains.

Unit Swing trains and components shared between units

Swing trains/components are trains/components that can be aligned to any unit. To be credited as such, their swing capability should be modeled in the PRA to provide an appropriate Fussell-Vesely value.

Maintenance Trains and Installed Spares

Some power plants have systems with extra trains to allow preventive maintenance to be carried out with the unit at power without impacting the risk-significant function of the system. That is, one of the remaining trains may fail, but the system can still perform its risk significant function. To be a maintenance train, a train must not be needed to perform the system's risk significant function.

An "installed spare" is a component (or set of components) that is used as a replacement for other equipment to allow for the removal of equipment from service for preventive or

corrective maintenance without impacting the risk-significant function of the system. To be an "installed spare," a component must not be needed for the system to perform the risk significant function.

Unavailability of the spare component/train is only counted in the index if the spare is substituted for a primary train/component. Unavailability is not monitored for a component/train when that component/train has been replaced by an installed spare or maintenance train.

1.2. Collection of Plant Data

Plant data for the UAI portion of the index includes:

- Actual train total unavailability data for the most recent 12 quarter period collected on a quarterly basis,
- Plant specific baseline planned unavailability, and
- Generic baseline unplanned unavailability.

Each of these data inputs to UAI will be discussed in the following sections.

1.2.1. Actual Train Unavailability

The *(Consolidated Data Entry)* CDE inputs for this parameter are Train Unavailable Hours and Critical Hours. The actual calculation of Train Unavailability is performed by CDE.

Train Unavailability: Train unavailability is the ratio of the hours the train was unavailable to perform its risk-significant functions due to planned or unplanned maintenance or test during the previous 12 quarters while critical to the number of critical hours during the previous 12 quarters. (Fault exposure hours are not included; unavailable hours are counted only for the time required to recover the train's risk-significant functions.)

Train unavailable hours: The hours the train was not able to perform its risk significant function due to maintenance, testing, equipment modification, electively removed from service, corrective maintenance, or the elapsed time between the discovery and the restoration to service of an equipment failure or human error that makes the train unavailable (such as a misalignment) while the reactor is critical.

~~*Train unavailable hours will be divided into planned and unplanned unavailable hours for input to CDE.*~~

Additional guidance on the following topics for counting train unavailable hours is provided below.

- Short Duration Unavailability
- Credit for Operator Recovery Actions to Restore the Risk-Significant Function

Short Duration Unavailability

Trains are generally considered to be available during periodic system or equipment realignments to swap components or flow paths as part of normal operations. Evolutions or surveillance tests that result in less than 15 minutes of unavailable hours per train at a time need not be counted as unavailable hours. Licensees should compile a list of surveillances or evolutions that meet this criterion and have it available for inspector review. In addition, equipment misalignment or mispositioning which is corrected in less than 15 minutes need not be counted as unavailable hours. The intent is to minimize unnecessary burden of data collection, documentation, and verification because these short durations have insignificant risk impact. If a licensee is required to take a component out of service for evaluation and corrective actions for greater than 15 minutes (for example, related to a Part 21 Notification), the unavailable hours must be included.

Credit for Operator Recovery Actions to Restore the Risk-Significant Functions

1. *During testing or operational alignment*:

Unavailability of a risk-significant function during testing or operational alignment need not be included if the test configuration is automatically overridden by a valid starting signal, or the function can be promptly restored either by an operator in the control room or by a designated operator[1] stationed locally for that purpose. Restoration actions must be contained in a written procedure[2], must be uncomplicated (*a single action or a few simple actions*), must be capable of being restored in time to satisfy PRA success criteria and must not require diagnosis or repair. Credit for a designated local operator can be taken only if (s)he is positioned at the proper location throughout the duration of the test for the purpose of restoration of the train should a valid demand occur. The intent of this paragraph is to allow licensees to take credit for restoration actions that are virtually certain to be successful (i.e., probability nearly equal to 1) during accident conditions.

The individual performing the restoration function can be the person conducting the test and must be in communication with the control room. Credit can also be taken for an operator in the main control room provided (s)he is in close proximity to restore the equipment when needed. Normal staffing for the test may satisfy the requirement for a dedicated operator, depending on work assignments. In all cases, the staffing must be considered in advance and an operator identified to perform the restoration actions independent of other control room actions that may be required.

Under stressful, chaotic conditions, otherwise simple multiple actions may not be accomplished with the virtual certainty called for by the guidance (e.g., lifting test leads

[1] Operator in this circumstance refers to any plant personnel qualified and designated to perform the restoration function.

[2] Including restoration steps in an approved test procedure.

and landing wires; or clearing tags). In addition, some manual operations of systems designed to operate automatically, such as manually controlling HPCI turbine to establish and control injection flow, are not virtually certain to be successful. These situations should be resolved on a case-by-case basis through the FAQ process.

2. *During Maintenance*

Unavailability of a risk-significant function during maintenance need not be included if the risk-significant function can be promptly restored either by an operator in the control room or by a designated operator[3] stationed locally for that purpose. Restoration actions must be contained in a written procedure[4], must be uncomplicated (*a single action or a few simple actions*), must be capable of being restored in time to satisfy PRA success criteria and must not require diagnosis or repair. Credit for a designated local operator can be taken only if (s)he is positioned at a proper location throughout the duration of the maintenance activity for the purpose of restoration of the train should a valid demand occur. The intent of this paragraph is to allow licensees to take credit for restoration of risk-significant functions that are virtually certain to be successful (i.e., probability nearly equal to 1).

The individual performing the restoration function can be the person performing the maintenance and must be in communication with the control room. Credit can also be taken for an operator in the main control room provided (s)he is in close proximity to restore the equipment when needed. Normal staffing for the maintenance activity may satisfy the requirement for a dedicated operator, depending on work assignments. In all cases, the staffing must be considered in advance and an operator identified to perform the restoration actions independent of other control room actions that may be required.

Under stressful chaotic conditions otherwise simple multiple actions may not be accomplished with the virtual certainty called for by the guidance (e.g., lifting test leads and landing wires, or clearing tags). These situations should be resolved on a case-by-case basis through the FAQ process.

1.2.2. Plant Specific Baseline Planned Unavailability

The baseline planned unavailability is based on actual plant-specific values for the period 2003 through 2005. (Plant specific values of the most recent data are used so that the indicator accurately reflects deviation from expected planned maintenance.) These values are expected to remain fixed unless the plant maintenance philosophy is substantially changed with respect to on-line maintenance or preventive maintenance. In these cases, the planned unavailability baseline value can be adjusted. A comment should be placed in the comment field of the quarterly report to identify a substantial change in planned

[3] Operator in this circumstance refers to any plant personnel qualified and designated to perform the restoration function.

[4] Including restoration steps in an approved test procedure.

unavailability. *The baseline value of planned unavailability may be changed at the discretion of the licensee except that they shall be changed when changes in maintenance practices result in greater than a 25% change in planned unavailability. Revised values will be used in the calculation the quarter following their update.*

To determine the initial value of planned unavailability:

1) Record the total train unavailable hours reported under the Reactor Oversight Process for 2003-2005.
2) Subtract any fault exposure hours still included in the 2003-2005 period.
3) Subtract unplanned unavailable hours.
4) Add any on-line overhaul hours and any other planned unavailability excluded in accordance with NEI 99-02. [5]
5) Add any planned unavailable hours for functions monitored under MSPI which were not monitored under SSU in NEI 99-02.
6) Subtract any unavailable hours reported when the reactor was not critical.
7) Subtract hours cascaded onto monitored systems by support systems. (However, do not subtract any hours already subtracted in the above steps.)
8) Divide the hours derived from steps 1-7 above by the total critical hours during 2003-2005. This is the baseline planned unavailability.

Support cooling planned unavailability baseline data is based on plant specific maintenance rule unavailability for years 2003-2005. Maintenance Rule practices do not typically differentiate planned from unplanned unavailability. However, best efforts will be made to differentiate planned and unplanned unavailability during this time period.

1.2.3. Generic Baseline Unplanned Unavailability

The unplanned unavailability values are contained in Table 1 and remain fixed. They are based on ROP PI industry data from 1999 through 2001. (Most baseline data used in Pis come from the 1995-1997 time period. However, in this case, the 1999-2001 ROP data are preferable, because the ROP data breaks out systems separately. Some of the industry 1995-1997 INPO data combine systems, such as HPCI and RCIC, and do not include PWR RHR. It is important to note that the data for the two periods is very similar.)

Table 1. Historical Unplanned Maintenance Unavailability Train Values

(Based on ROP Industry wide Data for 1999 through 2001)

SYSTEM	UNPLANNED UNAVAILABILITY/TRAIN
EAC	1.7 E-03
PWR HPSI	6.1 E-04

[5] Note: The plant-specific PRA should model significant on-line overhaul hours.

SYSTEM	UNPLANNED UNAVAILABILITY/TRAIN
PWR AFW (TD)	9.1 E-04
PWR AFW (MD)	6.9 E-04
PWR AFW (DieselD)	7.6 E-04
PWR (except CE) RHR	4.2 E-04
CE RHR	1.1 E-03
BWR HPCI	3.3 E-03
BWR HPCS	5.4 E-04
BWR RCIC	2.9 E-03
BWR IC	Need a value for isolation condensers
BWR RHR	1.2 E-03
Support Cooling	Use plant specific Maintenance Rule data for 2003-2005

Unplanned unavailability baseline data for the support cooling systems should be developed from plant specific Maintenance Rule data from the period 2003-2005. Maintenance Rule practices do not typically differentiate planned from unplanned unavailability. However, best efforts will be made to differentiate planned and unplanned unavailability during this time period. *NOTE: The sum of planned and unplanned unavailability cannot exceed the total unavailability.*

1.3. Calculation of UAI

The specific formula for the calculation of UAI is provided in this section. Each term in the formula will be defined individually and specific guidance provided for the calculation of each term in the equation. Required inputs to the INPO Consolidated Data Entry (CDE) System will be identified.

Calculation of System UAI due to train unavailability is as follows:

$$UAI = \sum_{j=1}^{n} UAIt_j \qquad \text{Eq. 1}$$

where the summation is over the number of trains (n) and UAI_t is the unavailability index for a train.

Calculation of UAI_t for each train due to actual train unavailability is as follows:

$$UAIt = CDFp\left[\frac{FVUAp}{UAp}\right]_{\max}(UAt - UABLt) \qquad \text{Eq. 2}$$

where:

CDF_p is the plant-specific Core Damage Frequency,

FV_{UAp} is the train-specific Fussell-Vesely value for unavailability,

UA_P is the plant-specific PRA value of unavailability for the train,

UA_t is the actual unavailability of train t, defined as:

$$UAt = \frac{\text{Unavailable hours during the previous 12 quarters while critical}}{\text{Critical hours during the previous 12 quarters}}$$

and, determined in section 1.21

UA_{BLt} is the historical baseline unavailability value for the train (sum of planned unavailability determined in section 1.2.2 and unplanned unavailability in section1.2.3)

Calculation of the quantities in equation 2 are discussed in the following sections.

1.3.1. Calculation of Core Damage Frequency (CDFp)

The Core Damage Frequency is a CDE input value. The required value is the internal events, average maintenance, at power value. Internal flooding and fire are not included in this calculated value. In general, all inputs to this indicator from the PRA are calculated from the internal events model only.

1.3.2. Calculation of [FV/UA]max for each train

FV and UA are separate CDE input values. Equation 2 includes a term that is the ratio of a Fussell-Vesely importance value divided by the related unavailability. This ratio is calculated for each train in the system and both the FV and UA are CDE inputs. (It may be recognized that the quantity [FV/UA] multiplied by the CDF is the Birnbaum importance measure, which is used in section 2.3.3.)

Calculation of these quantities is generally complex, but in the specific application used here, can be greatly simplified.

The simplifying feature of this application is that only those components (or the associated basic events) that can make a train unavailable are considered in the performance index. Components within a train that can each make the train unavailable are logically equivalent and the ratio FV/UA is a constant value for any basic event in that train. It can also be shown that for a given component or train represented by multiple basic events, the ratio of the two values for the component or train is equal to the ratio of values for any basic event within the train. Or:

$$\frac{FV_{be}}{UA_{be}} = \frac{FVUAp}{UAp} = \text{Constant}$$

Thus, the process for determining the value of this ratio for any train is to identify a basic event that fails the train, determine the unavailability for the event, determine the associated FV value for the event and then calculate the ratio. Use the basic event in the train with the largest failure probability (hence the maximum notation on the bracket) to minimize the effects of truncation on the calculation.

Some systems have multiple modes of operation, such as PWR HPSI systems that operate in injection as well as recirculation modes. In these systems all monitored components are not logically equivalent; unavailability of the pump fails all operating modes while unavailability of the sump suction valves only fails the recirculation mode. In cases such as these, if unavailability events exist separately for the components within a train, the appropriate ratio to use is the maximum.

[What happens if the Be is truncated in quantification and has no FV to ratio?]

2. System Unreliability Index (URI) Due to Component Unreliability

Calculation of the URI is performed in three major steps:

- Identification of the monitored components for each system
- Collection of plant data
- Calculation of the URI

Only the most risk significant components in each system are monitored to minimize the burden for each utility. It is expected that most, if not all the components identified for monitoring are already being monitored for failure reporting to INPO and are also monitored in accordance with the maintenance rule.

2.1. Identify Monitored Components

Monitored Component: A component whose failure to change state or remain running renders the train incapable of performing its risk-significant functions. In addition, all pumps and diesels in the monitored systems are included as monitored components.

The identification of monitored components involves the use of the system boundaries and success criteria, identification of the components to be monitored within the system boundary and the scope definition for each component.

2.1.1. System Boundaries and Success Criteria

The system boundaries developed in section 1.1.1 should be used to complete the steps in the following section.

For each system, the at power risk significant functions described in the Appendix F section "Additional Guidance for Specific Systems," that were determined to be risk-significant in accordance with NUMARC 93-01, or NRC approved equivalents (e.g., the STP exemption request) shall be identified. Success criteria shall then be identified for these functions.

If the licensee has chosen to use success criteria documented in the plant specific PRA, examples of plant specific performance factors that may be used to identify the required capability of the train/system to meet the risk-significant functions are provided below.

- Actuation
  - Time
  - Auto/manual

- Multiple or sequential
- Success requirements
  - Numbers of components or trains
  - Flows
  - Pressures
  - Heat exchange rates
  - Temperatures
  - Tank water level
- Other mission requirements
  - Run time
  - State/configuration changes during mission
- Accident environment from internal events
  - Pressure, temperature, humidity
- Operational factors
  - Procedures
  - Human actions
  - Training
  - Available externalities (e.g., power supplies, special equipment, etc.)

If the licensee has chosen to use design basis success criteria, it is not required to separately document them other than to indicate that is what was used.

If success criteria for a system varies by function or initiator, the most restrictive set will be used for the MSPI.

2.1.2. Selection of Components

For unreliability, use the following process for determining those components that should be monitored. These steps should be applied in the order listed.

1) INCLUDE all pumps and diesels.
2) Identify all AOV's and MOV's that change state to achieve the risk significant functions for the system as potential monitored components. Check valves, solenoid valves and manual valves are not included in the index.
   a. INCLUDE those valves from the list of valves from step 2 whose failure alone can fail a train. The success criteria used to identify these valves are those identified in the previous section. (See Figure F-5)
   b. INCLUDE redundant valves from the list of valves from step 2 within a multi-train system, whether in series or parallel, where the failure of both valves would prevent all trains in the system from performing a risk-significant function. The success criteria used to identify these valves are those identified in the previous section.(See Figure F-5)
   c. EXCLUDE those valves from steps a) and b) above whose Birnbaum importance, (See section 2.3.3) as calculated in this appendix, is less than 1.0e-06. This rule is applied at the discretion of the individual plant. A

balance should be considered in applying this rule between the goal to minimize the number of components monitored and having a large enough set of components to have an adequate data pool.

3) INCLUDE components that cross tie monitored systems between units (i.e. Electrical Breakers and Valves) if they are modeled in the PRA.

2.1.3. Definition of Component Boundaries

Table 2 defines the boundaries of components, and Figures F-1, F-2, F-3 and F-4 provide examples of typical component boundaries as described in Table 2.

Table 2. Component Boundary Definition

Component	Component boundary
Diesel Generators	The diesel generator boundary includes the generator body, generator actuator, lubrication system (local), fuel system (local), cooling components (local), startup air system receiver, exhaust and combustion air system, dedicated diesel battery (which is not part of the normal DC distribution system), individual diesel generator control system, circuit breaker for supply to safeguard buses and their associated local control circuit (coil, auxiliary contacts, wiring and control circuit contacts, and breaker-closure interlocks) .
Motor-Driven Pumps	The pump boundary includes the pump body, motor/actuator, lubrication system cooling components of the pump seals, the voltage supply breaker, and its associated local control circuit (coil, auxiliary contacts, wiring and control circuit contacts).
Turbine-Driven Pumps	The turbine-driven pump boundary includes the pump body, turbine/actuator, lubrication system (including pump), extractions, turbo-pump seal, cooling components, and local turbine control system including the control valve (speed).
Motor-Operated Valves	The valve boundary includes the valve body, motor/actuator, the voltage supply breaker (both motive and control power) and its associated local open/close circuit (open/close switches, auxiliary and switch contacts, and wiring and switch energization contacts).
Air-Operated Valves	The valve boundary includes the valve body, the air operator, associated solenoid-operated valve, the power supply breaker or fuse for the solenoid valve, and its associated control circuit (open/close switches and local auxiliary and switch contacts).

For control and motive power, only the last relay, breaker or contactor necessary to power or control the component is included in the monitored component boundary. For example, if an ESFAS signal actuates a MOV, only the relay that receives the ESFAS signal in the control circuitry for the MOV is in the MOV boundary. No other portions of the ESFAS are included.

Each plant will determine their monitored components and support components and have them available for NRC inspection.

2.2. Collection of Plant Data

Plant data for the URI includes:

- Demands and run hours
- Failures

2.2.1. Demands and Run Hours

Start demand: Any demand for the component to successfully start to perform its risk-significant functions, actual or test. (Exclude post maintenance tests, unless in case of a failure the cause of failure was independent of the maintenance performed.) The number of demands is;

- the number of actual ESF demands plus
- the number of estimated test demands plus
- the number of estimated operational/alignment demands.

It is also permissible to use the actual number of test and operational demands.

An update to the estimated demands is required if a change to the basis for the estimated demands results in a >25% change in the estimate. The new estimate will be used in the calculation the quarter following the input of the updated estimates into CDE. Some monitored valves will include a throttle function as well as open and close functions. It is not required to include every throttle movement of a valve as a counted demand. Only the initial movement of the valve should be counted as a demand.

Post maintenance tests: Tests performed following maintenance but prior to declaring the train/component operable, consistent with Maintenance Rule implementation.

Run demand: Any demand for the component, given that it has successfully started and run for 1 hour, to run/operate for its mission time to perform its risk-significant functions. (Exclude post maintenance tests, unless the cause of failure was independent of the maintenance performed.)

Run Hours: The number of run hours is:

- the number of actual ESF run hours plus
- the number of estimated test run hours plus
- the number of estimated operational/alignment run hours.

It is also permissible to use the actual number of test and operational run hours. Run hours include the first hour of operation of a component. An update to the estimated run hours is required if a change to the basis for the estimated hours results in a >25% change in the estimate.

2.2.2. Failures

EDG failure to start: A failure to start includes those failures up to the point the EDG has achieved rated speed and voltage. (Exclude post maintenance tests, unless the cause of failure was independent of the maintenance performed.)

EDG failure to load/run: Given that it has successfully started, a failure of the EDG output breaker to close, to successfully load sequence and to run/operate for one hour to perform its risk-significant functions. This failure mode is treated as a demand failure for calculation purposes. (Exclude post maintenance tests, unless the cause of failure was independent of the maintenance performed.)

EDG failure to run: Given that it has successfully started and loaded and run for an hour, a failure of an EDG to run/operate. (Exclude post maintenance tests, unless the cause of failure was independent of the maintenance performed.)

Pump failure on demand: A failure to start and run for at least one hour is counted as failure on demand. (Exclude post maintenance tests, unless the cause of failure was independent of the maintenance performed.)

Pump failure to run: Given that it has successfully started and run for an hour, a failure of a pump to run/operate. (Exclude post maintenance tests, unless the cause of failure was independent of the maintenance performed.)

Valve failure on demand: A failure to transfer to the required risk significant position (open, close, or throttle to the desired position as applicable) is counted as failure on demand. (Exclude post maintenance tests, unless the cause of failure was independent of the maintenance performed.) *(What about failure to maintain position? How does this relate to table 4? Same question for breaker failure on demand)*

Breaker failure on demand: A failure to transfer to the required risk significant position (open or close as applicable) is counted as failure on demand. (Exclude post maintenance tests, unless the cause of failure was independent of the maintenance performed.)

<u>Treatment of Demand and Run Failures</u>

Failures of monitored components on demand or failures to run, either actual or test are included in unreliability. Failures on demand or failures to run while not critical are included unless an evaluation determines the failure would not have affected the ability of the component to perform its risk-significant at power function. In no case can a postulated action to recover a failure be used as a justification to exclude a failure from the count. *Should Failures conditional on an initial success- be counted or not?*

<u>Treatment of Degraded Conditions Capable of Being Discovered By Normal Surveillance Tests</u>

Normal surveillance tests are those tests that are performed at a frequency of a refueling cycle or more frequently.

Degraded conditions, even if no actual demand or test existed, that render a monitored component incapable of performing its risk-significant functions are included in unreliability as a demand and a failure. The appropriate failure mode must be accounted for. For example, for valves, a demand and a demand failure would be assumed and

included in URI. For pumps and diesels, if the degraded condition would have prevented a successful start, a demand and a failure is included in URI, but there would be no run time hours or run failures. If it was determined that the pump/diesel would start and load run, but would fail sometime during the 24 hour run test or its surveillance test equivalent, the evaluated failure time would be included in run hours and a run failure would be assumed. A start demand and start failure would not be included. If a running component is secured from operation due to observed degraded performance, but prior to failure, then a run failure shall be counted unless evaluation of the condition shows that the component would have continued to operate for the risk-significant mission time starting from the time the component was secured. Unavailable hours are included for the time required to recover the risk-significant function(s) and only while critical.

Degraded conditions, or actual unavailability due to mispositioning of non-monitored components that render a train incapable of performing its risk-significant functions are only included in unavailability for the time required to recover the risk-significant function(s) and only while critical.

Loss of risk significant function(s) is assumed to have occurred if the established success criteria has not been met. If subsequent analysis identifies additional margin for the success criterion, future impacts on URI or UAI for degraded conditions may be determined based on the new criterion. However, URI and UAI must be based on the success criteria of record at the time the degraded condition is discovered. If the degraded condition is not addressed by any of the pre-defined success criteria, an engineering evaluation to determine the impact of the degraded condition on the risk-significant function(s) should be completed and documented. The use of component failure analysis, circuit analysis, or event investigations is acceptable. Engineering judgment may be used in conjunction with analytical techniques to determine the impact of the degraded condition on the risk-significant function. The engineering evaluation should be completed as soon as practicable. If it cannot be completed in time to support submission of the PI report for the current quarter, the comment field shall note that an evaluation is pending. The evaluation must be completed in time to accurately account for unavailability/unreliability in the next quarterly report. Exceptions to this guidance are expected to be rare and will be treated on a case-by-case basis. Licensees should identify these situations to the resident inspector.

<u>Treatment of Degraded Conditions Not Capable of Being Discovered by Normal Surveillance Tests</u>

These failures or conditions are usually of longer exposure time. Since these failure modes have not been tested on a regular basis, it is inappropriate to include them in the performance index statistics. These failures or conditions are subject to evaluation through the inspection process. Examples of this type are failures due to pressure locking/thermal binding of isolation valves, blockages in lines not regularly tested, unforeseen sequences not incorporated into the surveillance test, or inadequate component sizing/settings under accident conditions (not under normal test conditions). While not included in the calculation of the index, they should be reported in the comment field of the PI data submittal.

<u>Failures of Non-Monitored Components</u>

Failures of SSC's that are not included in the performance index will not be counted as a failure or a demand. Failures of SSC's that cause an SSC within the scope of the performance index to fail will not be counted as a failure or demand. An example could be a manual suction isolation valve left closed which causes a pump to fail. This would not be counted as a failure of the pump. Any mispositioning of the valve that caused the train to be unavailable would be counted as unavailability from the time of discovery. The significance of the mispositioned valve prior to discovery would be addressed through the inspection process.

2.3. Calculation of URI

Unreliability is monitored at the component level and calculated at the system level. Calculation of system URI due to changes in component unreliability is as follows:

$$URI = CDFp \sum_{j=1}^{m} \left[\frac{FVURcj}{URpcj} \right]_{\max} (URBcj - URBLcj) \qquad \text{Eq. 3}$$

Where the summation is over the number of monitored components (m) in the system, and:

CDF_p is the plant-specific Core Damage Frequency,

FV_{URc} is the component-specific Fussell-Vesely value for unreliability,

UR_{Pc} is the plant-specific PRA value of component unreliability,

UR_{Bc} is the Bayesian corrected component unreliability for the previous 12 quarters, and

UR_{BLc} is the historical industry baseline calculated from unreliability mean values for each monitored component in the system. The calculation is performed in a manner similar to equation 6 in section 2.3.4 below using the industry average values in Table 4.

The following sections will discuss the calculation of each of the terms in equation 3.

2.3.1. Calculation of Core Damage Frequency (CDFp)

The Core Damage Frequency is a CDE input value. The required value is the internal events average maintenance at power value. Internal flooding and fire are not included in this calculated value. In general, all inputs to this indicator from the PRA are calculated from the internal events model only.

2.3.2. Calculation of [FV/UR]max

The FV, UR and common cause adjustment values developed in this section are separate CDE input values.

Equation 3 includes a term that is the ratio of a Fussell-Vesely importance value divided by the related unreliability. The calculation of this ratio is performed in a similar manner to the ratio calculated for UAI, except that the ratio is calculated for each monitored component. Two additional factors need to be accounted for in the unreliability ratios that were not needed in the unavailability ratios, the contribution to the ratio from common cause failure events and the possible contribution from cooling water initiating events.

The discussion will start with the calculation of the initial ratio and then proceed with options for adjusting this value to account for the additional two factors.

It can be shown that for a given component represented by multiple basic events, the ratio of the two values for the component is equal to the ratio of values for any basic event representing the component. Or:

$$\frac{FVbe}{URbe} = \frac{FVURc}{URPc} = \text{Constant}$$

Note that the constant value may be different for the unreliability ratio and the unavailability ratio because the two types of events are frequently not logically equivalent. For example recovery actions may be modeled in the PRA for one but not the other.

Thus, the process for determining the initial value of this ratio for any component is to identify a basic event that fails the component (excluding common cause events), determine the failure probability for the event, determine the associated FV value for the event and then calculate the ratio, $[FV/UR]_{ind}$, where the subscript refers to independent failures. Use the basic event for the component and its associated FV value that results in the largest *[FV/UR]* ratio. This will typically be the event with the largest failure probability to minimize the effects of truncation on the calculation.

It is typical, given the component scope definitions in Table 2, that there will be several plant components modeled separately in the plant PRA that make up the MSPI component definition. For example, it is common that an MOV, the actuation relay for the MOV and the power supply breaker for the MOV are separate components in the plant PRA. Ensure that the basic events related to all of these individual components are considered when choosing the appropriate *[FV/UR]* ratio.

[what happens if the BE is truncated in quantification and has no FV to ratio?]

Cooling Water and Service Water System $[FV/UR]_{ind}$ Values

Component Cooling Water Systems (CCW) and Service Water Systems (SWS) at some nuclear stations contribute to risk in two ways. First, the systems provide cooling to equipment used for the mitigation of events and second, the failures in the systems may also result in the initiation of an event. The contribution to risk from failures to provide cooling to other plant equipment is modeled directly through dependencies in the PRA model. However, the contribution due to event initiation is treated in three general ways in current PRAs:

1) The use of linked initiating event fault trees for these systems
2) Fault tree solutions are generated for these systems external to the PRA and the calculated value is used in the PRA as a point estimate
3) A point estimate value is generated for the initiator using industry and plant specific event data and used in the PRA.

If a PRA uses the first modeling option, then the FV values calculated will reflect the total contribution to risk for a component in the system, **as long the same basic event is used in the initiator and mitigation fault trees.** If different basic events are used, the

FV values for the initiator tree basic event and the mitigation tree basic event should be added.

If a linked initiating event fault tree is the modeling approach taken, then no additional corrections to the FV values is required. This section will outline a method to be used to if linked initiating event fault trees are not used.

The corrected $[FV/UR]_{ind}$ for a component C is calculated from the expression:

$$[FV/UR]_{ind} = [(FVc + FVie * FVsc)/UR]$$

Where:

FVc is the Fussell-Vesely for CDF for component *C* as calculated from the PRA Model. This does not include any contribution from initiating events.

FVie is the Fussell-Vesely contribution for the initiating event in question (e.g. loss of service water).

FVsc is the Fussell-Vesely **within the system fault tree only** for component *C* (i.e. the ratio of the sum of the cut sets in the fault tree solution in which that component appears to the overall system failure probability).

$[FV/UR]_{ind}$ is a CDE input value.

Including the Effect of Common Cause in $[FV/UR]_{max}$

Changes in the independent failure probability of an SSC imply a proportional change in the common cause failure probability, even though no actual common cause failures have occurred. The impact of this effect on URI is considered by including a multiplicative adjustment to the $[FV/UR]_{ind}$ ratio developed in the section above. This multiplicative factor is a CDE input value.

Two methods are provided for including this effect, a simple generic approach that uses bounding generic adjustment and a more accurate plant specific method that uses values derived from the plant specific PRA.

Generic Adjustment Values

Generic values have been developed for monitored components that are subject to common cause failure. The correction factor is used as a multiplier on the [FV/UR] ratio for each component in the common cause group. This method may be used for simplicity and is recommended for components that are less significant contributors to the URI (e.g. [FV/UR] is small). The multipliers are provided in the table below. *Single train systems are not included.*

Table 3. Generic CCF Adjustment Values

System	Component	Generic CCF Adjustment Values				
		1.25	1.50	2.00	3.00	5.00
EAC	EDG	2 EDGs (1/2) or 3 EDGs (2/3)	4 EDGs(1/4) with other diverse sources of	3 EDGs(1/3)		4 EDGs(1/4) and no diverse sources of

System	Component	Generic CCF Adjustment Values				
		1.25	1.50	2.00	3.00	5.00
			power			power
HPI	MDP Running		With SI and CVC		With only CVC	
	MDP Standby		With SI and CVC		With only SI	
HRS	MDP Standby	2 MDP (1/2)			3 MDP (1/3)	
	TDP	2 TDP and 1 MDP			3 TDP and no MDP	
RHR	MDP Standby		ALL			
SWS	MDP Running				ALL	
	MDP Standby		ALL			
	DDP	ALL				
CCW	MDP Running		ALL			
	MDP Standby			ALL		
ALL	MOV			ALL		
ALL	AOV		ALL			
Note: Success criteria noted in parenthesis						

NOTE WE BELIEVE THIS TABLE SHOULD BE DEVELOPED FOR ALL PLANTS

The Multiplier in the table above is used to adjust the FV value selected for use in the preceding section. For example, at a plant with three one hundred percent capacity EDG's, the FV selected in the preceding section would be multiplied by 2.00.

Plant Specific Common Cause Adjustment

The general form of a plant specific common cause adjustment factor is given by the equation:

$$A = \frac{\left[\left(\sum_{i=1}^{n} FVi\right) + FVcc\right]}{\sum_{i=1}^{n} FVi}. \qquad \text{Eq. 4}$$

Where:

n = is the number of components in a common cause group,

FV_i = the FV for independent failure of component i,

and

FV_{cc} = the FV for the common cause failure of components in the group.

In the expression above, the FV_i are the values for the specific failure mode for the component group that was chosen because it resulted in the maximum *[FV/UR]* ratio. The FV_{cc} is the FV that corresponds to all combinations of common cause events for that group of components for the same specific failure mode. Note that the FV_{cc} may be a sum of individual FV_{cc} values that represent different combinations of component failures in a common cause group.

For example consider again a plant with three one hundred percent capacity emergency diesel generators. In this example, three failure modes for the EDG are modeled in the PRA, fail to start (FTS), fail to load (FTL) and fail to run (FTR). Common cause events exist for each of the three failure modes of the EDG in the following combinations:

1) Failure of all three EDGs,
2) Failure of EDG-A and EDG-B,
3) Failure of EDG-A and EDG-C,
4) Failure of EDG-B and EDG-C.

This results in a total of 12 common cause events.

Assume the maximum [FV/UR] resulted from the FTS failure mode, then the FV_{cc} used in equation 4 would be the sum of the four common cause FTS events for the combinations listed above.

It is recognized that there is significant variation in the methods used to model common cause. It is common that the 12 individual common cause events described above are combined into a fewer number of events in many PRAs. Correct application of the plant specific method would, in this case, require the decomposition of the combined events and their related FV values into the individual parts. This can be accomplished by application of the following proportionality:

$$FVpart = FVtotal \times \frac{URpart}{URtotal} \qquad \text{Eq. 5}$$

Returning to the example above, assume that common cause was modeled in the PRA by combining all failure modes for each specific combination of equipment modeled. Thus there would be four common cause events corresponding to the four possible equipment groupings listed above, but each of the common cause events would include the three failure modes FTS, FTL and FTR. Again, assume the FTS independent failure mode is the event that resulted in the maximum [FV/UR] ratio. The FVcc value to be used would be determined by determining the FTS contribution for each of the four common cause events. In the case of the event representing failure of all three EDGs this would be determined from

$$FV_{FTSABC} = FV_{ABC} \times \frac{UR_{FTSABC}}{UR_{ABC}}.$$

Where,

FV_{FTSABC} = the FV for the FTS failure mode and the failure of all three EDGs

FV_{ABC} = the event from the PRA representing the failure of all three EDGs due to all failure modes

UR_{FTSABC} = the failure probability for a FTS of all three EDGs, and

UR_{ABC} = the failure probability for all failure modes for the failure of all three EDGs.

After this same calculation was performed for the remaining three common cause events, the value for FV_{CC} to be used in equation 4 would then be calculated from:

$$FV_{cc} = FV_{FTSABC} + FV_{FTSAB} + FV_{FTSAC} + FV_{FTSBC}$$

This value is used in equation 4 to determine the value of A. The final quantity used in equation 3 is given by:

$$[FV/UR]_{max} = A*[FV/UR]_{ind}$$

In this case the individual values on the right hand side of the equation above are input to CDE.

2.3.3. Birnbaum Importance

One of the rules used for determining the valves to be monitored in this performance indicator permitted the exclusion of valves with a Birnbaum importance less than 1.0e-06. To apply this screening rule the Birnbaum importance is calculated from the values derived in this section as:

$$B = CDF*A*[FV/UR]_{ind} = CDF*[FV/UR]_{max}$$

2.3.4. Calculation of UR_{Bc}

Component unreliability is calculated by:

$$UR_{Bc} = P_D + \lambda T_m \qquad \text{Eq 6}$$

Where:

P_D is the component failure on demand probability calculated based on data collected during the previous 12 quarters;

λ is the component failure rate (per hour) for failure to run calculated based on data collected during the previous 12 quarters,

and

T_m is the risk-significant mission time for the component based on plant specific PRA model assumptions.

NOTE:

For valves only the P_D term applies

For pumps $P_D + \lambda T_m$ applies

For diesels $P_{D\,start} + P_{D\,load\,run} + \lambda T_m$ applies

The first term on the right side of equation 6 is calculated as follows.[6]

$$PD = \frac{(Nd + a)}{(a + b + D)} \qquad \text{Eq. 7}$$

where in this expression:

N_d is the total number of failures on demand during the previous 12 quarters,

D is the total number of demands during the previous 12 quarters determined in section 2.2.1

The values a and b are parameters of the industry prior, derived from industry experience (see Table 4).

In the calculation of equation 5 the numbers of demands and failures is the sum of all demands and failures for similar components within each system. Do not sum across units for a multi-unit plant. For example, for a plant with two trains of Emergency Diesel Generators, the demands and failures for both trains would be added together for one evaluation of P_D which would be used for both trains of EDGs.

In the second term on the right side of equation 6, λ is calculated as follows.

$$\lambda = \frac{(Nr + a)}{(Tr + b)} \qquad \text{Eq. 8}$$

where:

N_r is the total number of failures to run during the previous 12 quarters (determined in section 2.2.2),

T_r is the total number of run hours during the previous 12 quarters (determined in section 2.2.1)

and

a and b are parameters of the industry prior, derived from industry experience (see Table 4).

In the calculation of equation 8 the numbers of demands and run hours is the sum of all run hours and failures for similar components within each system. Do not sum across units for a multi-unit plant. For example, a plant with two trains of Emergency Diesel Generators, the run hours and failures for both trains would be added together for one evaluation of λ which would be used for both trains of EDGs.

2.3.5. Baseline Unreliability Values

The baseline values for unreliability are contained in Table 4 and remain fixed.

[6] Atwood, Corwin L., Constrained noninformative priors in risk assessment, *Reliability Engineering and System Safety*, 53 (1996; 37-46)

Table 4. Industry Priors and Parameters for Unreliability

Component	Failure Mode	a [a]	b [a]	Industry MeanValue [b] URBLC
Circuit Breaker		4.99E-1	6.23E+2	8.00E-4
Motor-operated valve	Fail to open (or close)	4.99E-1	7.12E+2	7.00E-4
Air-operated valve	Fail to open (or close)	4.98E-1	4.98E+2	1.00E-3
Motor-driven pump, standby	Fail to start	4.97E-1	2.61E+2	1.90E-3
	Fail to run	5.00E-1	1.00E+4	5.00E-5
Motor-driven pump, running or alternating	Fail to start	4.98E-1	4.98E+2	1.00E-3
	Fail to run	5.00E-1	1.00E+5	5.00E-6
Turbine-driven pump, AFWS	Fail to start	4.85E-1	5.33E+1	9.00E-3
	Fail to run	5.00E-1	2.50E+3	2.00E-4
Turbine-driven pump, HPCI or RCIC	Fail to start	4.78E-1	3.63E+1	1.30E-2
	Fail to run	5.00E-1	2.50E+3	2.00E-4
Diesel-driven pump, AFWS	Fail to start	4.80E-1	3.95E+1	1.20E-2
	Fail to run	5.00E-1	2.50E+3	2.00E-4
Emergency diesel generator	Fail to start	4.92E-1	9.79E+1	5.00E-3
	Fail to load/run	4.95E-1	1.64E+2	3.00E-3
	Fail to run	5.00E-1	6.25E+2	8.00E-4

a. A constrained, non-informative prior is assumed. For failure to run events, a = 0.5 and b = (a)/(mean rate). For failure upon demand events, a is a function of the mean probability:

Mean Probability	a
0.0 to 0.0025	0.50

>0.0025 to 0.010	0.49
>0.010 to 0.016	0.48
>0.016 to 0.023	0.47
>0.023 to 0.027	0.46

Then b = (a)(1.0 - mean probability)/(mean probability).

b. Failure to run events occurring within the first hour of operation are included within the fail to start failure mode. Failure to run events occurring after the first hour of operation are included within the fail to run failure mode.

c. Fail to load and run for one hour was calculated from the failure to run data in the report indicated. The failure rate for 0.0 to 0.5 hour (3.3E-3/h) multiplied by 0.5 hour, was added to the failure rate for 0.5 to 14 hours (2.3E-4/h) multiplied by 0.5 hour.

3. ~~Avoiding False White Indications~~*Establishing Statistical Significance*

In typical applications where statistical data is used in decision making[7] the general approach is:

1. Choose the conclusion that the test is intended to confirm (the null hypothesis). In the case of the MSPI the null hypothesis could be stated as "the system is performing at the industry average performance".
2. Choose the significance level at which the hypothesis is to be rejected, typically greater than 90%. This level is related to the probability of making a Type 1 error (probability of a type 1 error = [1-significance]), or rejecting the hypothesis when it is actually true. In NUREG-1753, "Risk Based Performance Indicators" this type of error was characterized as a false positive indication. The criteria used in this report was that the probability of indicating white when performance was actually at the baseline should be less than 20%.
3. Determine the test statistic to be used to reject the hypothesis. In the case of the MSPI, the test statistic is that the hypothesis is rejected when the MSPI>1.0e-06. It is usual that the test statistic and sample plan be selected in a manner that allows the desired significance level to be achieved. In the case of MSPI, the test statistic is imposed. In addition, the size of the sample is fixed by the number of demands and run hours in the rolling 36 month window used for the indicator.

Thus for the MSPI, the significance level at which the hypothesis is rejected is actually the result of the imposed test criteria (1.0e-06) and the fixed sample plan. In some cases, the significance level is very high, with little potential for a false positive indication. However, in other instances, the potential for a false white indication is unacceptably large. Although rigorous calculations of the significance level for the MSPI were not performed, simple analyses showed that the potential for a false positive was high when the difference between performance at the industry average level (baseline) and MSPI>1.0e-06 is represented by only one additional failure.

[7] (See the subject of Hypothesis Testing in any good Statistics Text. A good online reference can be found if you Google SticiGui.)

This problem can be illustrated by examining a postulated plant with three EDGs, each one tested monthly. In a 36 month window this would result in a total of 108 starts. The demand related failure probability from table 3 is 8.0e-03 (Fail to Start and Fail to Load). Thus the expected number of demand failures is about 1. There is, however, over a 20% probability that 2 or more demand failures would be experienced even though the EDGs are actually operating at the expected reliability. This may or not result in a MSPI value greater than the white threshold, depending on the Birnbaum importance of the EDGs. If the importance is large enough then there is a 20% probability that EDGs operating at the industry average reliability would cross the white performance threshold based on the one additional failure.

This problem is resolved by applying a limit of 5.0e-07 to the magnitude of the most significant failure in a system. This ensures that one failure beyond the expected number of failures alone cannot result in MSPI > 1.0e-06. A MSPI > 1.0e-06 will still be a possible result if there is significant system unavailability, or failures in other components in the system.

This limit on the maximum value of the most significant failure in a system is only applied if the MSPI value calculated without the application of the limit is less than 1.0e-05.

This calculation will be performed by the CDE software, no additional input values are required.

4. Calculation of System Component Reliability Limits

The mitigating systems chosen to be monitored are generally the most important systems in nuclear power stations. However, in some cases the system may not be as important at a specific station. This is generally due to specific features at a plant, such as diverse methods of achieving the same function as the monitored system. In these cases a significant degradation in performance could occur before the risk significance reached a point where the MSPI would cross the white boundary. In cases such as this *it* is not likely that the performance degradation would be limited to that one system and may well involve cross cutting issues that would potentially affect the performance of other mitigating systems.

A performance based criteria for determining degraded performance is used as an additional decision criteria for determining that performance of a mitigating system has degraded to the white band. This decision is based on deviation of system performance from expected performance. The decision criteria was developed such that a system is placed in the white performance band when there is high confidence that system performance has degraded even though MSPI < 1.0e-06.

The criteria is applied to each component type in a system. If the number of failures in a 36 month period for a component type exceeds a performance based limit, then the system is considered to be performing at a white level, regardless of the MSPI calculated value. The performance based limit is calculated in two steps:

1. Determine the expected number of failures for a component type and
2. Calculate the performance limit from this value.

The expected number of failures is calculated from the relation

$$Fe = Nd * p + \lambda * Tr$$

Where:

N_d is the number of demands

p is the probability of failure on demand

λ is the failure rate

T_r is the runtime of the component

This value is used in the following expression to determine the maximum number of failures:

$$Fm = 4.65 * Fe + 4.2$$

If the actual number of failures (Fa) of a similar group of components (components that are grouped for the purpose of pooling data) within a system in a 36 month period exceeds Fm, then the system is placed in the largest of the white performance level or the level dictated by the MSPI calculation.

This calculation will be performed by the CDE software, no additional input values are required.

5. Additional Guidance for Specific Systems

This guidance provides typical system scopes. Individual plants should include those systems employed at their plant that are necessary to satisfy the specific risk-significant functions described below and reflected in their PRAs.

Emergency AC Power Systems

Scope

The function monitored for the emergency AC power system is the ability of the emergency generators to provide AC power to the class 1E buses upon a loss of off-site power while the reactor is critical, including post-accident conditions. The emergency AC power system is typically comprised of two or more independent emergency generators that provide AC power to class 1E buses following a loss of off-site power. The emergency generator dedicated to providing AC power to the high pressure core spray system in BWRs is not within the scope of emergency AC power.

The electrical circuit breaker(s) that connect(s) an emergency generator to the class lE buses that are normally served by that emergency generator are considered to be part of the emergency generator train.

Emergency generators that are not safety grade, or that serve a backup role only (e.g., an alternate AC power source), are not included in the performance reporting.

Train Determination

The number of emergency AC power system trains for a unit is equal to the number of class 1E emergency generators that are available to power safe-shutdown loads in the event of a loss of off-site power for that unit. There are three typical configurations for EDGs at a multi-unit station:

1. EDGs dedicated to only one unit.
2. One or more EDGs are available to "swing" to either unit
3. All EDGs can supply all units

For configuration 1, the number of trains for a unit is equal to the number of EDGs dedicated to the unit. For configuration 2, the number of trains for a unit is equal to the number of dedicated EDGs for that unit plus the number of "swing" EDGs available to that unit (i.e., The "swing" EDGs are included in the train count for each unit). For configuration 3, the number of trains is equal to the number of EDGs.

Clarifying Notes

The emergency diesel generators are not considered to be available during the following portions of periodic surveillance tests unless recovery from the test configuration during accident conditions is virtually certain, as described in "Credit for operator recovery actions during testing," can be satisfied; or the duration of the condition is less than fifteen minutes per train at one time:

- Load-run testing
- Barring

An EDG is not considered to have failed due to any of the following events:

- spurious operation of a trip that would be bypassed in a loss of offsite power event
- malfunction of equipment that is not required to operate during a loss of offsite power event (e.g., circuitry used to synchronize the EDG with off-site power sources)
- failure to start because a redundant portion of the starting system was intentionally disabled for test purposes, if followed by a successful start with the starting system in its normal alignment

Air compressors are not part of the EDG boundary. However, air receivers that provide starting air for the diesel are included in the EDG boundary.

If an EDG has a dedicated battery independent of the station's normal DC distribution system, the dedicated battery is included in the EDG system boundary.

~~If the EDG day tank is not sufficient to meet the EDG mission time t~~The fuel transfer pumps are not considered to be a monitored component in the EDG system. They are considered to be a support system.

BWR High Pressure Injection Systems

(High Pressure Coolant Injection, High Pressure Core Spray, and Feedwater Coolant Injection)

Scope

These systems function at high pressure to maintain reactor coolant inventory and to remove decay heat following a small-break Loss of Coolant Accident (LOCA) event or a loss of main feedwater event.

The function monitored for the indicator is the ability of the monitored system to take suction from the suppression pool (and from the condensate storage tank, if credited in the plant's accident analysis) and inject into the reactor vessel.

Plants should monitor either the high-pressure coolant injection (HPCI), the high-pressure core spray (HPCS), or the feedwater coolant injection (FWCI) system, whichever is installed. The turbine and governor (or motor-driven FWCI pumps), and associated piping and valves for turbine steam supply and exhaust are within the scope of these systems. Valves in the feedwater line are not considered within the scope of these systems.

The emergency generator dedicated to providing AC power to the high-pressure core spray system is included in the scope of the HPCS. The HPCS system typically includes a "water leg" pump to prevent water hammer in the HPCS piping to the reactor vessel. The "water leg" pump and valves in the "water leg" pump flow path are ancillary components and are not included in the scope of the HPCS system. Unavailability is not included while critical if the system is below steam pressure specified in technical specifications at which the system can be operated.

Train Determination

The HPCI and HPCS systems are considered single-train systems. The booster pump and other small pumps are ancillary components not used in determining the number of trains. The effect

of these pumps on system performance is included in the system indicator to the extent their failure detracts from the ability of the system to perform its risk-significant function. For the FWCI system, the number of trains is determined by the number of feedwater pumps. The number of condensate and feedwater booster pumps are not used to determine the number of trains.

Reactor Core Isolation Cooling

(or Isolation Condenser)

Scope

This system functions at high pressure to remove decay heat following a loss of main feedwater event. The RCIC system also functions to maintain reactor coolant inventory following a very small LOCA event.

The function monitored for the indicator is the ability of the RCIC system to cool the reactor vessel core and provide makeup water by taking a suction from either the condensate storage tank or the suppression pool and injecting at rated pressure and flow into the reactor vessel.

The Reactor Core Isolation Cooling (RCIC) system turbine, governor, and associated piping and valves for steam supply and exhaust are within the scope of the RCIC system. Valves in the feedwater line are not considered within the scope of the RCIC system.

The Isolation Condenser and inlet valves are within the scope of Isolation Condenser system. Unavailability is not included while critical if the system is below steam pressure specified in technical specifications at which the system can be operated.

Train Determination

The RCIC system is considered a single-train system. The condensate and vacuum pumps are ancillary components not used in determining the number of trains. The effect of these pumps on RCIC performance is included in the system indicator to the extent that a component failure results in an inability of the system to perform its risk-significant function.

BWR Residual Heat Removal Systems

Scope

The functions monitored for the BWR residual heat removal (RHR) system are the ability of the RHR system to remove heat from the suppression pool, provide low pressure coolant injection, and provide post-accident decay heat removal. The pumps, heat exchangers, and associated piping and valves for those functions are included in the scope of the RHR system.

Train Determination

The number of trains in the RHR system is determined by the number of parallel RHR heat exchangers.

PWR High Pressure Safety Injection Systems

Scope

These systems are used primarily to maintain reactor coolant inventory at high pressures following a loss of reactor coolant. HPSI system operation following a small-break LOCA involves transferring an initial supply of water from the refueling water storage tank (RWST) to cold leg piping of the reactor coolant system. Once the RWST inventory is depleted, recirculation of water from the reactor building emergency sump is required. The function monitored for HPSI is the ability of a HPSI train to take a suction from the primary water source (typically, a borated water tank), or from the containment emergency sump, and inject into the reactor coolant system at rated flow and pressure.

The scope includes the pumps and associated piping and valves from both the refueling water storage tank and from the containment sump to the pumps, and from the pumps into the reactor coolant system piping. For plants where the high-pressure injection pump takes suction from the residual heat removal pumps, the residual heat removal pump discharge header isolation valve to the HPSI pump suction is included in the scope of HPSI system. Some components may be included in the scope of more than one train. For example, cold-leg injection lines may be fed from a common header that is supplied by both HPSI trains. In these cases, the effects of testing or component failures in an injection line should be reported in both trains.

Train Determination

In general, the number of HPSI system trains is defined by the number of high head injection paths that provide cold-leg and/or hot-leg injection capability, as applicable.

For Babcock and Wilcox (B&W) reactors, the design features centrifugal pumps used for high pressure injection (about 2,500 psig) and no hot-leg injection path. Recirculation from the containment sump requires operation of pumps in the residual heat removal system. They are typically a two-train system, with an installed spare pump (depending on plant-specific design) that can be aligned to either train.

For two-loop Westinghouse plants, the pumps operate at a lower pressure (about 1600 psig) and there may be a hot-leg injection path in addition to a cold-leg injection path (both are included as a part of the train).

For Westinghouse three-loop plants, the design features three centrifugal pumps that operate at high pressure (about 2500 psig), a cold-leg injection path through the BIT (with two trains of redundant valves), an alternate cold-leg injection path, and two hot-leg injection paths. One of the pumps is considered an installed spare. Recirculation is provided by taking suction from the RHR pump discharges. A train consists of a pump, the pump suction valves and boron injection tank (BIT) injection line valves electrically associated with the pump, and the associated hot-leg injection path. The alternate cold-leg injection path is required for recirculation, and should be included in the train with which its isolation valve is electrically associated. This represents a two-train HPSI system.

For Four-loop Westinghouse plants, the design features two centrifugal pumps that operate at high pressure (about 2500 psig), two centrifugal pumps that operate at an intermediate pressure (about 1600 psig), a BIT injection path (with two trains of injection valves), a cold-leg safety injection path, and two hot-leg injection paths. Recirculation is provided by taking suction from

the RHR pump discharges. Each of two high pressure trains is comprised of a high pressure centrifugal pump, the pump suction valves and BIT valves that are electrically associated with the pump. Each of two intermediate pressure trains is comprised of the safety injection pump, the suction valves and the hot-leg injection valves electrically associated with the pump. The cold-leg safety injection path can be fed with either safety injection pump, thus it should be associated with both intermediate pressure trains. This HPSI system is considered a four-train system for monitoring purposes.

For Combustion Engineering (CE) plants, the design features two or three centrifugal pumps that operate at intermediate pressure (about 1300 psig) and provide flow to two or four cold-leg injection paths or two hot-leg injection paths. In most designs, the HPSI pumps take suction directly from the containment sump for recirculation. In these cases, the sump suction valves are included within the scope of the HPSI system. This is a two-train system (two trains of combined cold-leg and hot-leg injection capability). One of the three pumps is typically an installed spare that can be aligned to either train or only to one of the trains (depending on plant-specific design).

PWR Auxiliary Feedwater Systems

Scope

The AFW system provides decay heat removal via the steam generators to cool down and depressurize the reactor coolant system following a reactor trip. The AFW system is assumed to be required for an extended period of operation during which the initial supply of water from the condensate storage tank is depleted and water from an alternative water source (e.g., the service water system) is required. Therefore components in the flow paths from both of these water sources are included; however, the alternative water source (e.g., service water system) is not included.

The function monitored for the indicator is the ability of the AFW system to take a suction from the primary water source (typically, the condensate storage tank) or, if required, from an emergency source (typically, a lake or river via the service water system) and inject into at least one steam generator at rated flow and pressure.

The scope of the auxiliary feedwater (AFW) or emergency feedwater (EFW) systems includes the pumps and the components in the flow paths from the condensate storage tank and, if required, the valve(s) that connect the alternative water source to the auxiliary feedwater system. Pumps included in the Technical Specifications are included in the scope of this indicator. Startup feedwater pumps are not included in the scope of this indicator.

Train Determination

The number of trains is determined primarily by the number of parallel pumps. For example, a system with three pumps is defined as a three-train system, whether it feeds two, three, or four injection lines, and regardless of the flow capacity of the pumps. Some components may be included in the scope of more than one train. For example, one set of flow regulating valves and isolation valves in a three-pump, two-steam generator system are included in the motor-driven pump train with which they are electrically associated, but they are also included (along with the redundant set of valves) in the turbine-driven pump train. In these instances, the effects of testing

or failure of the valves should be reported in both affected trains. Similarly, when two trains provide flow to a common header, the effect of isolation or flow regulating valve failures in paths connected to the header should be considered in both trains.

PWR Residual Heat Removal System *(Check for any needed change wrt CE plants and Surry, N. Anna and Beaver Valley)*

Scope

The functions monitored for the PWR residual heat removal (RHR) system are those that are required to be available when the reactor is critical. These typically include the low-pressure injection function and the post-accident recirculation mode used to cool and recirculate water from the containment sump following depletion of RWST inventory to provide post-accident decay heat removal. The pumps, heat exchangers, and associated piping and valves for those functions are included in the scope of the RHR system. Containment spray function should be included if it is identified as a risk-significant post accident decay heat removal function. Containment spray systems that only provide containment pressure control are not included.

Train Determination

The number of trains in the RHR system is determined by the number of parallel RHR heat exchangers. Some components are used to provide more than one function of RHR. If a component cannot perform as designed, rendering its associated train incapable of meeting one of the risk-significant functions, then the train is considered to be failed. Unavailable hours would be reported as a result of the component failure.

Cooling Water Support System

Scope

The function of the cooling water support system is to provide for direct cooling of the components in the other monitored systems. It does not include indirect cooling provided by room coolers or other HVAC features.

Systems that provide this function typically include service water and component cooling water or their cooling water equivalents. Pumps, valves, heat exchangers and line segments that are necessary to provide cooling to the other monitored systems are included in the system scope up to, but not including, the last valve that connects the cooling water support system to *a single component in another*~~the other~~ monitored systems. This last valve is included in the other monitored system boundary. *Service water systems are typically open "raw water" systems that use natural sources of water such as rivers, lakes or oceans. Component Cooling Water systems are typically closed "clean water" systems.*

Valves in the cooling water support system that must close to ensure sufficient cooling to the other monitored system components to meet risk significant functions are included in the system boundary.

If a cooling water system provides cooling to only one monitored system, then it should be included in the scope of that monitored system.

Train Determination

The number of trains in the Cooling Water Support System will vary considerably from plant to plant. The way these functions are modeled in the plant-specific PRA will determine a logical

approach for train determination. For example, if the PRA modeled separate pump and line segments, then the number of pumps and line segments would be the number of trains.

Clarifying Notes

Service water pump strainers and traveling screens are not considered to be monitored components and are therefore not part of URI. However, clogging of strainers and screens ~~due to expected or routinely predictable environmental conditions~~ that render the train unavailable to perform its risk significant cooling function (which includes the risk-significant mission times) are included in UAI.

~~Unpredictable extreme environmental conditions that render the train unavailable to perform its risk significant cooling function should be addressed through the FAQ process to determine if resulting unavailability should be included in UAI.~~

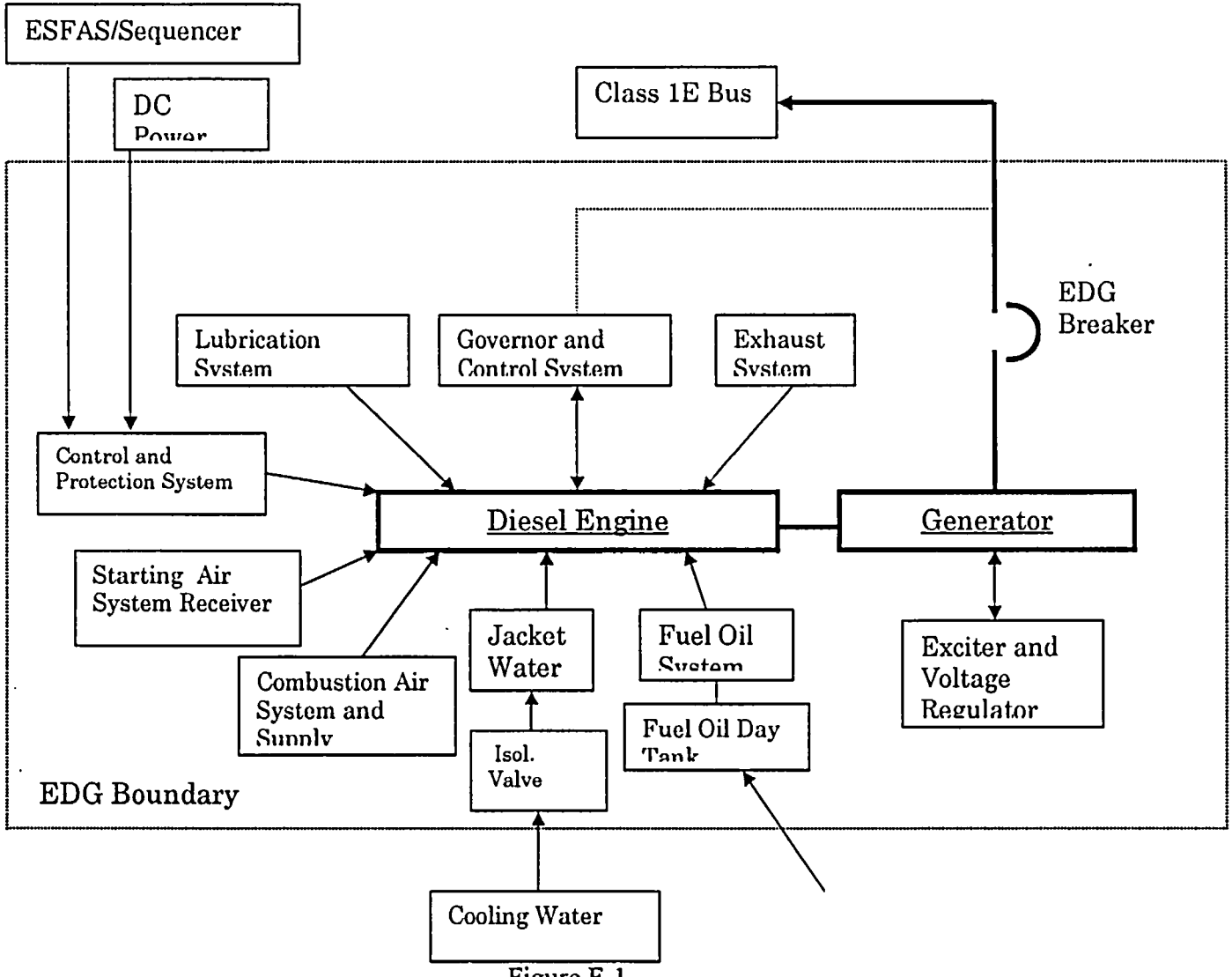
ESFAS/Sequencer
DC Power
Class 1E Bus
EDG Breaker
Lubrication System
Governor and Control System
Exhaust System
Control and Protection System
Diesel Engine
Generator
Starting Air System Receiver
Jacket Water
Fuel Oil System
Exciter and Voltage Regulator
Combustion Air System and Supply
Fuel Oil Day Tank
Isol. Valve
EDG Boundary
Cooling Water

Figure F-1

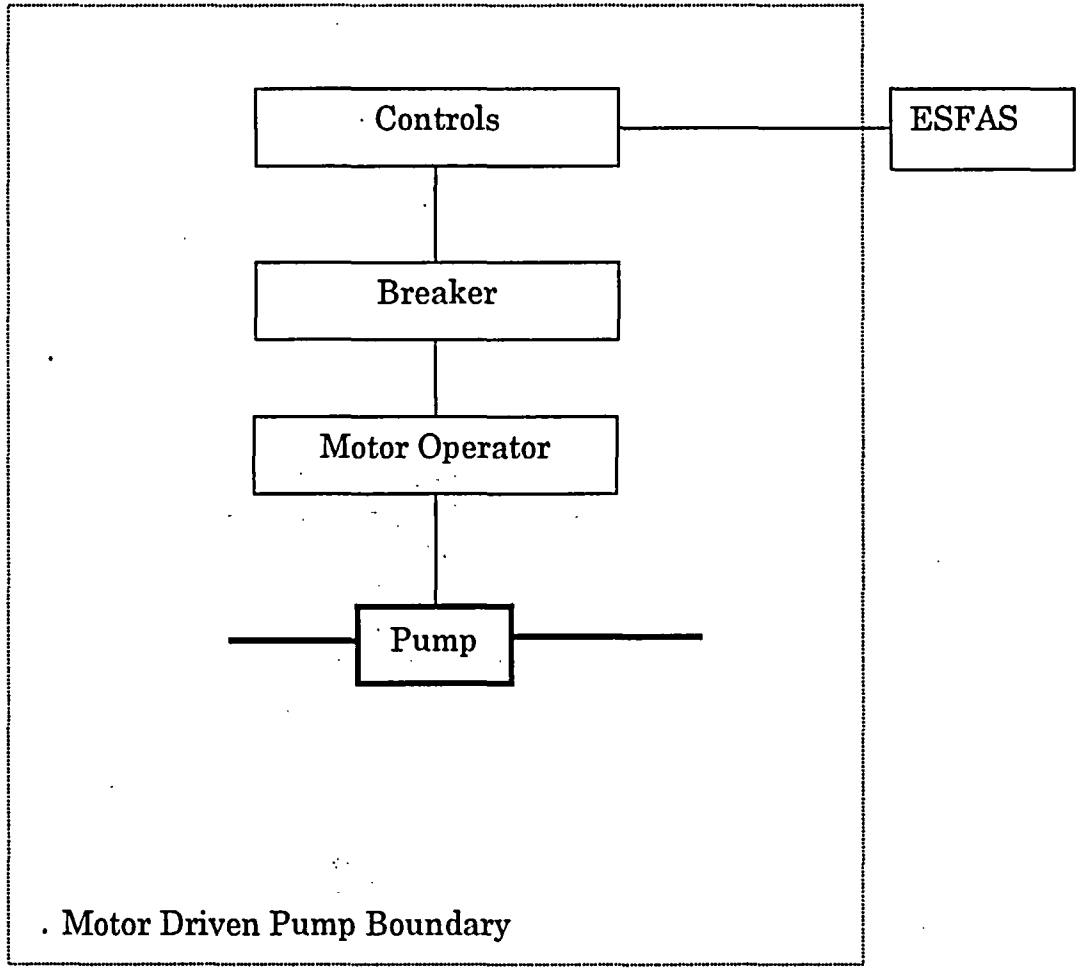
Controls
ESFAS
Breaker
Motor Operator
Pump
Motor Driven Pump Boundary

Figure F-2

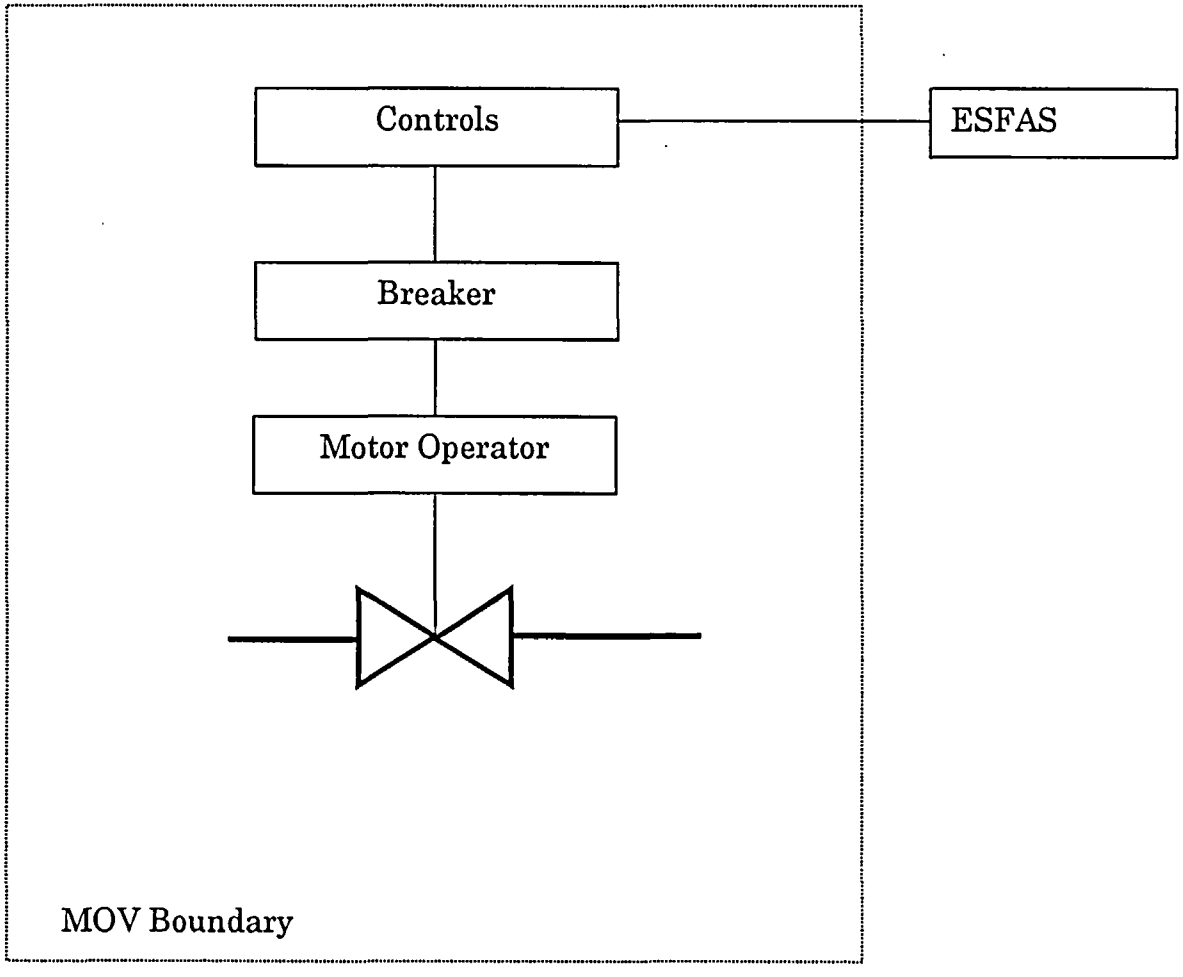

Figure F-3

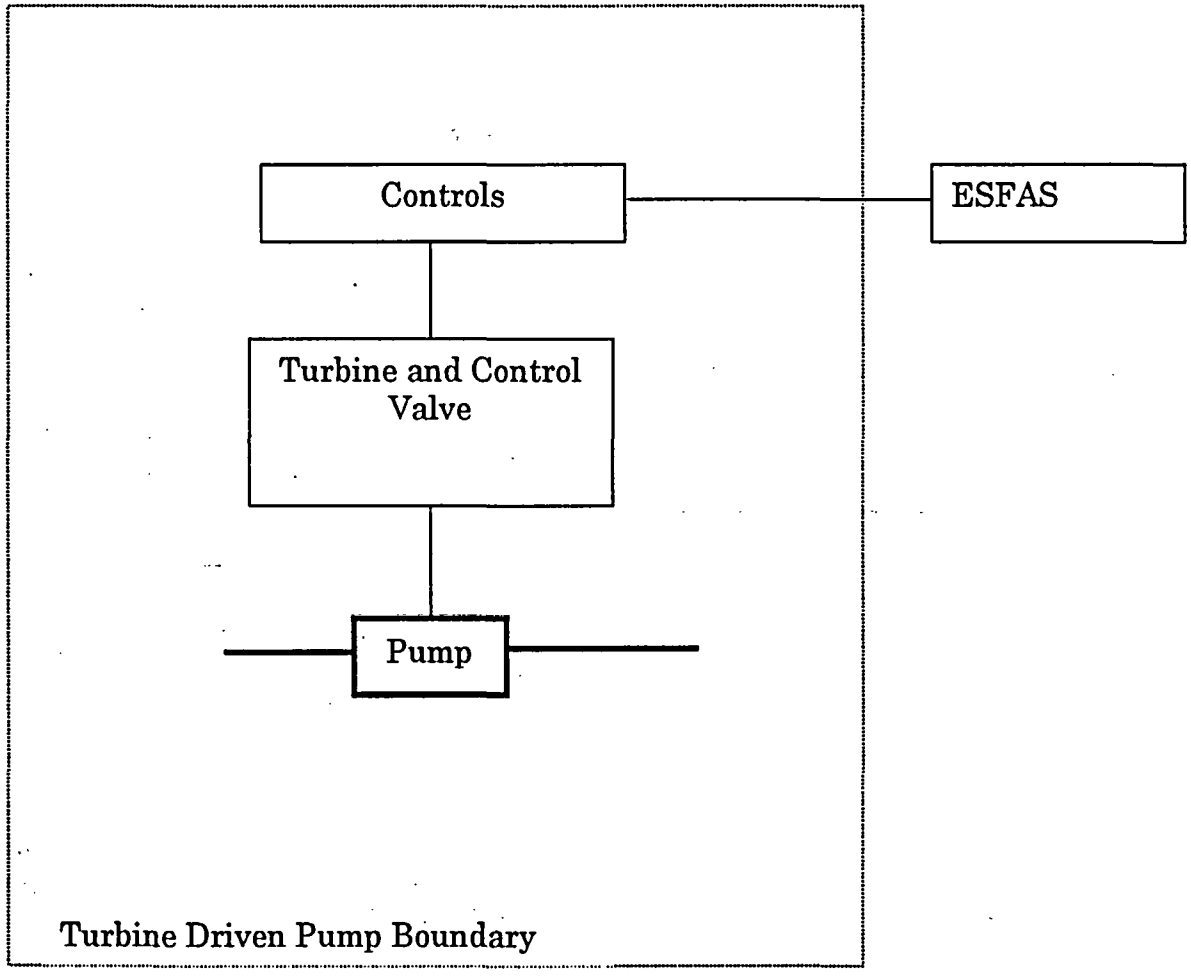
Controls
ESFAS
Turbine and Control Valve
Pump
Turbine Driven Pump Boundary

Figure F-4

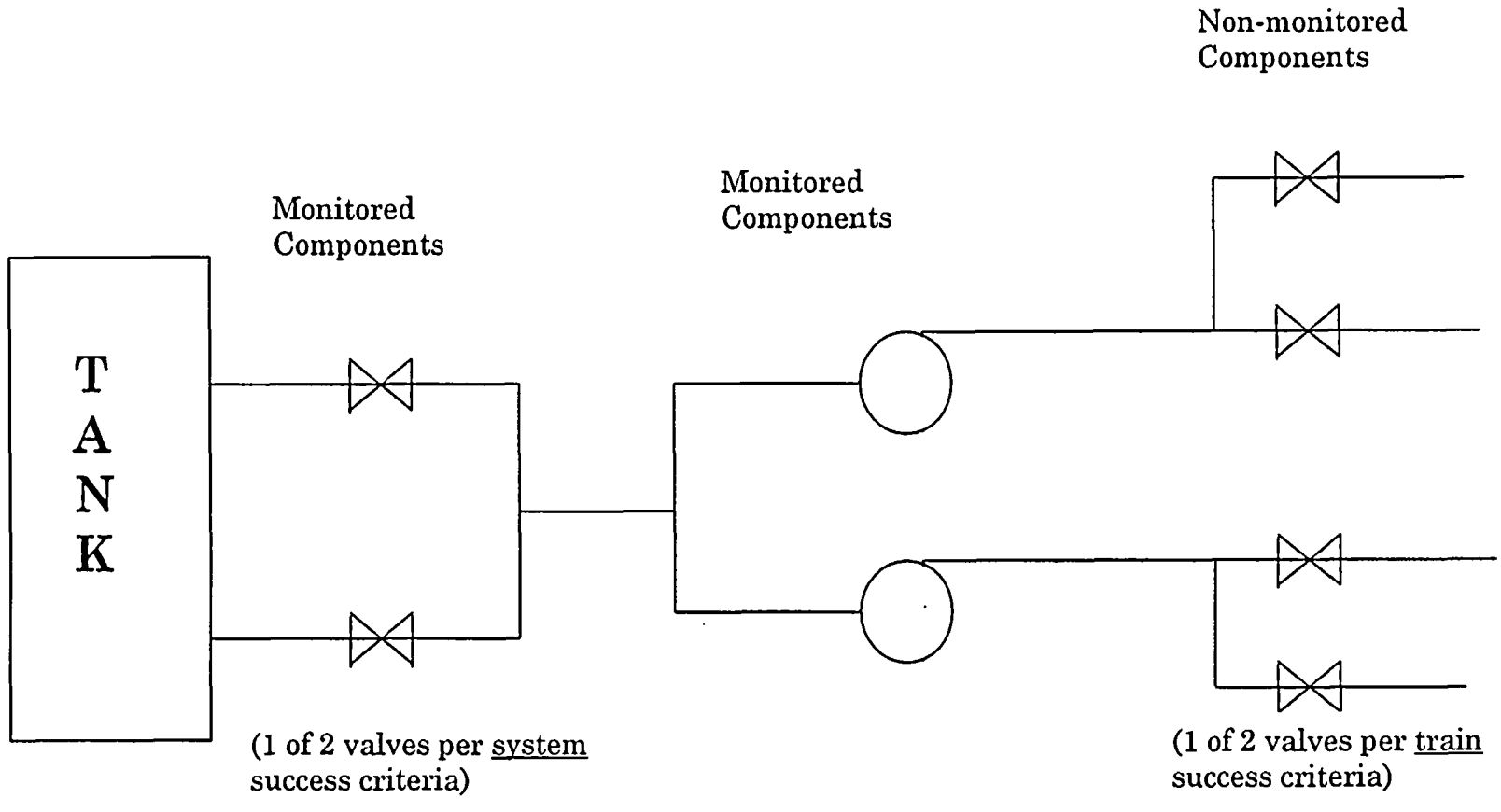
Non-monitored
Components
Monitored
Components
Monitored
Components
TANK
(1 of 2 valves per system
success criteria)
(1 of 2 valves per train
success criteria)

Figure F-5

TempNo.	PI	Question/Response	Status	Plant/ Co.
27.3	IE02	Question: Should a reactor scram due to high reactor water level, where the feedwater pumps tripped due to the high reactor water level, count as a scram with a loss of normal heat removal Background Information: On April 6, 2001 LaSalle Unit 2 (BWR), during maintenance on a motor driven feedwater pump regulating valve, experienced a reactor automatic reactor scram on high reactor water level. During the recovery, both turbine driven reactor feedwater pumps (TDRFPs) tripped due to high reactor water level. The motor driven reactor feedwater pump was not available due to the maintenance being performed. The reactor operators choose to restore reactor water level through the use of the Reactor Core Isolation Cooling (RCIC) System, due to the fine flow control capability of this system, rather than restore the TDRFPs. Feedwater could have been restored by resetting a TDRFP as soon as the control board high reactor water level alarm cleared. Procedure LGA-001 "RPV Control" (Reactor Pressure Vessel control) requires the unit operator to "Control RPV water level between 11 in. and 59.5 in. using any of the systems listed below: Condensate/feedwater, RCIC, HPCS, LPCS, LPCI, RHR." The following control room response actions, from standard operating procedure LOP-FW-04, "Startup of the TDRFP" are required to reset a TDRFP. No actions are required outside of the control room (and no diagnostic steps are required). Verify the following: TDRFP M/A XFER (Manual/Automatic Controller) station is reset to Minimum No TDRFP trip signals are present Depress TDRFP Turbine RESET pushbutton and observe the following Turbine RESET light Illuminates TDRFP High Pressure and Low Pressure Stop Valves OPEN PUSH M/A increase pushbutton on the Manual/Automatic Controller station Should this be considered a scram with the loss of normal heat removal? Proposed Answer: The ROP working group is currently working to prepare a response.	1/25 Introduced 2/28 NRC to discuss with resident 4/25 Discussed 5/22 On hold 6/12 Discussed. Related FAQ 30.8 9/26 Discussed 10/31 Discussed	LaSalle
28.3	IE02	Question: This event was initiated because a feedwater summer card failed low. The failure caused the feedwater circuitry to sense a lower level than actual. This invalid low level signal caused the Reactor Recirculation pumps to shift to slow speed while also causing the feedwater system to feed the Reactor Pressure Vessel (RPV) until a high level scram (Reactor Vessel Water Level – High, Level 8) was initiated. Within the first three minutes of the transient, the plant had gone from Level 8, which initiated the scram, to Level 2 (Reactor Vessel Water Level – Low Low, Level 2), initiating High Pressure Core Spray (HPCS) and Reactor Core Isolation Cooling (RCIC) injection, and again back to Level 8. The operators had observed the downshift of the Recirculation pumps nearly coincident with the scram, and it was not immediately apparent what had caused the trip due to the rapid sequence of events. As designed, when the reactor water level reached Level 8, the operating turbine driven feed pumps tripped. The pump control logic prohibits restart of the feed pumps (both the turbine driven pumps and motor driven feed pump	3/21 Discussed 4/25 Discussed 5/22 Modified to reflect discussion of 4/25, On Hold 6/12 Discussed. Related FAQ 30.8	Perry

TempNo.	PI	Question/Response	Status	Plant/ Co.
		(MFP)) until the Level 8 signal is reset. (On a trip of one or both turbine feed pumps, the MFP would automatically start, except when the trip is due to Level 8.) All three feedwater pumps (both turbine driven pumps and the MFP) were physically available to be started from the control room, once the Level 8 trip was reset. Procedures are in place for the operators to start the MFP or the turbine driven feedwater pumps in this situation. Because the cause of the scram was not immediately apparent to the operators, there was initially some misunderstanding regarding the status of the MFP. (Because the card failure resulted in a sensed low level, the combination of the recirculation pump downshift, the reactor scram, and the initiation of HPCS and RCIC at Level 2 provided several indications to suspect low water level caused the scram.) As a result of the initial indications of a plant problem (the downshift of the recirculation pumps), some operators believed the MFP should have started on the trip of the turbine driven pumps. This was documented in several personnel statements and a narrative log entry. Contributing to this initial misunderstanding was a MFP control power available light bulb that did not illuminate until it was touched. In fact, the MFP had functioned as it was supposed to, and aside from the indication on the control panel, there were no impediments to restarting any of the feedwater pumps from the control room. No attempt was made to manually start the MFP prior to resetting the Level 8 feedwater trip signal. Regardless of the issue with the MFP, however, both turbine driven feed pumps were available once the high reactor water level cleared, and could have been started from the control room without diagnosis or repair. Procedures are in place to accomplish this restart, and operators are trained in the evolution. Since RCIC was already in operation, operators elected to use it as the source of inventory, as provided for in the plant emergency instructions, until plant conditions stabilized. Should this event be counted as a Scram with a Loss of Normal Heat Removal? Response: The ROP working group is currently working to prepare a response.		
30.8	IE02	Question: Many plant designs trip the main feedwater pumps on high reactor water level (BWRs), and high steam generator water level or certain other automatic trips (PWRs). Under what conditions would a trip of the main feedwater pumps be considered/not considered a scram with loss of normal heat removal? Response: The ROP working group is currently working to prepare a response.	5/22 Introduced 6/12 Discussed 9/26 Discussed. 10/31 Discussed	Generic
32.3a	IE02	Question: An unplanned scram occurred October 7, 2001, during startup following an extended forced outage. The unit was in Mode 1 at approximately 8% reactor power with a main feed pump and low-flow feedwater preheating in service. The operators were preparing to roll the main turbine when a reactor tripped occurred. The cause of the trip was a loss of voltage to the control rod drive mechanisms and was not related to the heat removal path. Main feedwater isolated on the trip, as designed, with the steam generators being supplied by the auxiliary feedwater (AFW) pumps. At 5 minutes after the trip, the reactor coolant system (RCS) temperature was 540 degrees and trending down. The operators verified that the steam dumps, steam generator power operated relief valves, start-up steam supplies and blowdown were isolated. Additionally, AFW flow was isolated to all Steam Generators as allowed by the trip response procedure. At 9 minutes after the trip, with RCS temperature still trending down, the main steam isolation valves (MSIV) were closed in accordance with the reactor trip response procedure curtailing the cooldown. The RCS cooldown was attributed to steam that was still being supplied to low-flow feedwater preheating and #4 steam generator AFW flow control valve not automatically moving to its flow retention position as expected with high AFW flow. The low-flow feedwater preheating is a known steam load during low power operations and the AFW flow control issue was identified by the control room balance of plant operator. The trip response procedure directs the operators to check for and take actions to control AFW flow and eliminate the feedwater heater steam supply.	1/23 Revised. Split into two FAQs 3/20 Discussed 5/1 Discussed 5/22 Tentative Approval 6/18 Discussion deferred to July 7/24 Discussed	DC Cook

TempNo.	PI	Question/Response	Status	Plant/ Co.
		When this trip occurred the unit was just starting up following a 40 day forced outage. The reactor was at approximately 8% power and there was very little decay heat present following the trip. With very little decay heat available, the primary contribution to RCS heating is from Reactor Coolant Pumps (RCPs). Evaluation of these heat loads, when compared to the cooling provided by AFW, shows that there is approximately 3.5 times as much cooling flow provided than is required to remove decay heat under these conditions plus pump heat. This resulted in rapid cooling of the RCS and ultimately required closure of the MSIVs. Other conditions such as low flow feedwater preheating and the additional AFW flow due to the AFW flow control valve failing to move to its flow retention setting contributed to this cooldown, but were not the primary cause. Even without these contributors to the cooldown, closure of MSIVs would have been required due to the low decay heat present following the trip. It should also be noted that the conditions that are identified as contributing to the cooldown are not conditions which prevent the secondary plant from being available for use as a cooldown path. The AFW flow control valve not going to the flow retention setting increases the AFW flow to the S/G, and in turn causes an increase in cooldown. This condition is corrected by the trip response procedure since the procedure directs the operator to control AFW flow as a method to stabilize the RCS temperature. With low-flow feedwater preheating in service, main steam is aligned to feedwater heaters 5 and 6 and is remotely regulated from the control room. Low-flow feedwater preheating is used until turbine bleed steam is sufficient to provide the steam supply then the system is isolated. There are no automatic controls or responses associated with the regulating valves, so when a trip occurs, operators must close the regulating valves to secure the steam source. Until the steam regulating valves are closed, this is a steam load contributing to a cooldown. The low-flow preheating steam supplies are identified in the trip response procedure since they are a CNP specific design issue. The actions taken to control RCS cooldown were in accordance with the plant procedure in response to the trip. The primary reason that the MSIVs were required to be closed was due to the low level of decay heat present following a 40 day forced outage. The closure of the MSIVs was to control the cooldown as directed by plant procedure and not to mitigate an off-normal condition or for the safety of personnel or equipment. With the low decay heat present following the 40 day forced outage, there would not have been a need to reopen the MSIVs prior to recommencing the startup. Should the reactor trip described above be counted in the Unplanned Scrams with Loss of Normal Heat Removal Performance Indicator?		
		Response: Yes. The licensee's reactor trip response procedure has an "action/expected response" that reactor coolant system temperature following a trip would be stable at or trending to the no-load Tavg value. If that expected response is not obtained, operators are directed to stop dumping steam and verify that steam generator blowdown is isolated. If cooldown continues, operators are directed to control total feedwater flow. If cooldown continues, operators are directed to close all steam generator stop valves (MSIVs) and other steam valves. During the unit trip described, the #4 steam generator auxiliary feedwater flow control valve did not reposition to the flow retention setting as expected (an off normal condition). In addition, although control room operators manually closed the low-flow feedwater preheat control valves that were in service, leakage past these valves (a pre-existing degraded condition identified in the Operator Workaround database) also contributed to the cooldown. Operator logs attributed the reactor system cooldown to the #4 AFW flow control valve failure as well as to steam being supplied to low-flow feedwater preheating. As stated above, the trip response procedure directs operators to control feedwater flow in order to control the cooldown. Operator inability to control the cooldown through control of feedwater flow as directed is considered an off normal condition. Since the cooldown continued due to an off normal condition, operators closed the MSIVs, and therefore this trip is considered a scram with loss of normal heat removal.		
34.6	IE02	Question: Should the following event be counted as a scram with loss of normal heat removal?	3/20 Introduced 3/20 Discussed	STP

TempNo.	PI	Question/Response	Status	Plant/ Co.
		STP Unit Two was manually tripped on Dec. 15, 2002 as required by the off normal procedure for high vibration of the main turbine. Approximately 17 minutes after the Unit was manually tripped main condenser vacuum was broken at the discretion of the Shift Supervisor to assist in slowing the turbine. Plant conditions were stabilized using Auxiliary Feedwater and Steam Generator Power Operated Relief Valves. Main Feedwater remained available via the electric motor driven Startup Feedwater pump. Main steam headers remained available to provide cooling via the steam dump valves. At any time vacuum could have been reestablished without diagnoses or repair using established operating procedures until after completion of the scram response procedures. Scrams with a Loss of Normal Heat Removal performance indicator is defined as *"The number of unplanned scrams while critical, both manual and automatic, during the previous 12 quarters that were either caused by or involved a loss of the normal heat removal path prior to establishing reactor conditions that allow use of the plant's normal long term heat removal systems."* This indicator states that a loss of normal heat removal has occurred whenever any of the following conditions occur: loss of main feedwater, loss of main condenser vacuum, closure of the main steam isolation valves or loss of turbine bypass capability. The determining factor for this indicator is whether or not the normal heat removal path is available, not whether the operators choose to use that path or some other path. The STP plant is designed to isolate main feedwater after a trip by closing the main feedwater control valves. The auxiliary feedwater pumps are then designed to start on low steam generator levels. This is expected following normal operation above low power levels and in turn provides the normal heat removal. This design functioned as expected on December 15, 2002 when the reactor was manually tripped due to high turbine vibration. Normal plant operating procedures 0POP03-ZG-0006 (Plant Shutdown from 100% to Hot Standby) and 0POP03-ZG-0001 (Plant Heatup) state if Auxiliary Feedwater is being used to feed the steam generators than the preferred method of steaming is through the steam generator power operated relief valves. This can be found in steps 7.4 and 7.5 of 0POP03-ZG-0001 and steps 6.6.5 and 6.6.10 of 0POP03-ZG-0006. The note prior to 6.6.10 states *"the preferred method for controlling SG steaming rates while feeding with AFW is with the SG PORVs"*. The normal heat removal path as defined in NEI 99-02 Revision 2 was in service and functioning properly for seventeen minutes after the manual reactor trip and would have continued to function had not the shift supervisor voluntarily broke condenser vacuum and closed the MSIV's. Interviews with the shift supervisor showed that the decision to break vacuum was two part. 1) Based on experience and reports from the field it was known that vacuum would need to be broken to support the maintenance state required for the main turbine and at a minimum to support timely inspection. 2)This would assist in slowing the turbine. The decision to break vacuum was not based solely on mitigating an off-normal condition or for the safety of personnel or equipment. Because Auxiliary Feedwater system had actuated and was in service as expected, the decision was made to use Auxiliary Feedwater and steam through the SG PORVs. As stated earlier, this is the preferred method of heat removal if the decision to use Auxiliary Feedwater is employed as supported by the normal operating procedures while the plant is in Mode 3. Main feedwater remained available via the electric motor driven Startup Feedwater pump and the main steam headers remained available to provide cooling via the steam dump valves if required. Discussion with the shift supervisor showed he was confident that at any time vacuum could have been readily recovered from the control room without the need for diagnoses or repair using established operating procedures if the need arose. An outside action would be required in drawing vacuum in that a Condenser Air Removal pump would require starting locally in the TGB. This is a simplistic, proceduralized and commonly performed evolution. Personnel are fully confident this would have been performed without incident if required. Closing the MSIVs and breaking vacuum as quickly as possible is not uncommon at STP. For a normal planned shutdown MSIVs are closed and vacuum broken within four to six hours typically to support required maintenance in the secondary. If maintenance in the secondary is known to be critical path than vacuum has been broken as early as three hours and fifteen minutes following opening of the main generator breaker. The only reason that vacuum is not broken sooner is because in most cases it is needed to support chemistry testing.	6/18 Discussed; Question to be revised to reflect discussion 7/24 Discussed	

TempNo.	PI	Question/Response	Status	Plant/ Co.
		By limiting the flow path as described in NEI 99-02 for normal heat removal there is undue burden being placed on the utility. Only recognizing this one specific flow path reduces operational flexibility and penalizes utilities for imparting conservative decision making. Conditions are established immediately following a reactor trip (100% to Mode 3) that can be sustained indefinitely using Auxiliary Feedwater and steaming through the steam generator PORVs. This fact is again supported in the stations Plant Shutdown from 100% to Hot standby and Plant Heatup normal operating procedures. The cause of a trip, the intended forced outage work scope, or outage duration varies and inevitably will factor into which method of normal long term heat removal is best for the station to employ shortly following a trip. Response: The ROP working group is currently working to prepare a response. Licensee Proposed Response: NO. Since vacuum was secured at the discretion of the Shift Supervisor and could have been restored using existing normally performed operating procedures, the function meets the intention of being available but not used.		
36.1	IE02	Question: With the unit in RUN mode at 100% power, the control room received indication that a Reactor Pressure Vessel relief valve was open. After taking the steps directed by procedure to attempt to reseat the valve without success, operators scrammed the reactor in response to increasing suppression pool temperature. Following the scram, and in response to procedural direction to limit the reactor cooldown rate to less than 100 degrees per hour, the operators closed the Main Steam Isolation Valves (MSIVs). The operators are trained that closure of the MSIV's to limit cool down rate is expected in order to minimize steam loss through normal downstream balance-of-plant loads (steam jet air ejectors, offgas preheaters, gland seal steam). At the time that the MSIVs were closed, the reactor was at approximately 500 psig. One half hour later, condenser vacuum was too low to open the turbine bypass valves and reactor pressure was approximately 325 psig. Approximately eight hours after the RPV relief valve opened, the RPV relief valve closed with reactor pressure at approximately 50 psig. This information is provided to illustrate the time frame during which the reactor was pressurized and condenser vacuum was low. Although the MSIVs were not reopened during this event, they could have been opened at any time. Procedural guidance is provided for reopening the MSIVs. Had the MSIVs been reopened within approximately 30 minutes of their closure, condenser vacuum was sufficient to allow opening of the turbine bypass valves. If it had been desired to reopen the MSIVs later than that, the condenser would have been brought back on line by following the normal startup procedure for the condenser. As part of the normal startup procedure for the condenser, the control room operator draws vacuum in the condenser by dispatching an operator to the mechanical vacuum pump. The operator starts the mechanical vacuum pump by opening a couple of manual valves and operating a local switch. All other actions, including opening the MSIVs and the turbine bypass valves, are taken by the control room operator in the control room. It normally takes between 45 minutes and one hour to establish vacuum using the mechanical vacuum pump. The reactor feed pumps and feedwater system remained in operation or available for operation throughout the event. The condenser remained intact and available and the MSIVs were available to be opened from the control room throughout the event. The normal heat removal path was always and readily available (i.e., use of the normal heat removal path required only a decision to use it and the following of normal station procedures) during this event. Does this scram constitute a scram with a loss of normal heat removal? Response: No. The normal heat removal path was not lost even though the MSIVs were manually closed to control cooldown rate. There was no leak downstream of the MSIVs, and reopening the MSIVs would not have introduced further	9/25 Introduced and discussed	Quad Cities

TempNo.	PI	Question/Response	Status	Plant/ Co.
		complications to the event. The normal heat removal path was purposefully and temporarily isolated to address the cooldown rate, only. Reopening the normal heat removal path was always available at the discretion of the control room operator and would not have involved any diagnosis or repair. Further supporting information: The clarifying notes for this indicator state: "*Loss of normal heat removal path* means the loss of the normal heat removal path as defined above. The determining factor for this indicator is whether or not the normal heat removal path is *available*, not whether the operators choose to use that path or some other path." In this case, the operator did not choose to use the path through the MSIVs, even though the normal heat removal path was available. The clarifying notes for this indicator also state: "*Operator actions or design features to control the reactor cooldown rate or water level*, such as closing the main feedwater valves or closing all MSIVs, are not reported in this indicator as long as the normal heat removal path can be readily recovered from the control room without the need for diagnosis or repair." In this case, the closing of the MSIVs was performed solely to control reactor cooldown rate. It was not performed to isolate a steam leak. There was no diagnosis or repair involved in this event. The MSIVs could have been reopened following normal plant procedures		
36.2	IE02	Question: Should an "Unplanned Scram with a Loss of Normal Heat Removal" be reported for the Peach Bottom Unit 2 (July 22, 2003) reactor scram followed by a high area temperature Group I isolation? <u>Description of Event:</u> At approximately 1345 on 07/22/03, a Main Generator 386B and 386F relay trip resulted in a load reject signal to the main turbine and the main turbine control valves went closed. The Unit 2 reactor received an automatic Reactor Protection System (RPS) scram signal as a result of the main turbine control valves closing. Following the scram signal, all control rods fully inserted and, as expected, Primary Containment Isolation System (PCIS) Group II and III isolations occurred due to low Reactor Pressure Vessel (RPV) level. The Group III isolation includes automatic shutdown of Reactor Building Ventilation. RPV level control was re-established with the Reactor Feed System and the scram signal was reset at approximately 1355 hours. At approximately 1356 hours, the crew received a High Area Temperature alarm for the Main Steam Line area. The elevated temperature was a result of the previously described trip of the Reactor Building ventilation system. At approximately 1358, a PCIS Group I isolation signal occurred due to Steam Tunnel High Temperature resulting in the automatic closure of all Main Steam Isolation Valves (MSIV).Following the MSIV closure, the crew transitioned RPV pressure and level control to the High Pressure Coolant Injection (HPCI) and Reactor Core Isolation Cooling (RCIC) systems. Following the reset of the PCIS Group II and III isolations at approximately 1408, Reactor Building ventilation was restored. At approximately 1525, the PCIS Group I isolation was reset and the MSIVs were opened. Normal cooldown of the reactor was commenced and both reactor recirculation pumps were restarted. Even though the Group I isolation could have been reset following the Group II/III reset at 1408, the crew decided to pursue other priorities before reopening the MSIVs including: stabilizing RPV level and pressure using HPCI and RCIC; maximizing torus cooling; evaluating RCIC controller oscillations; evaluating a failure of MO-2-02A-53A "A" Recirculation Pump Discharge Valve; and, minimizing CRD flow to facilitate restarting the Reactor Recirculation pumps. **Problem Assessment:** It is recognized that loss of Reactor Building ventilation results in rising temperatures in the Outboard MSIV Room. The rate of this temperature rise and the maximum temperature attained are exacerbated by summertime temperature conditions. When the high temperature isolation occurred, the crew immediately recognized and understood the cause to be the loss of Reactor Building ventilation. The crew then prioritized their activities and utilized existing General Plant (GP) and System Operating (SO) procedures to re-open the MSIVs. Reopening of the MSIVs was:	9/25 Introduced and discussed	Peach Bottom

TempNo.	PI	Question/Response	Status	Plant/ Co.
		• easily facilitated by restarting Reactor Building ventilation, • completed from the control room using normal operating procedures • without the need of diagnosis or repair Therefore, the MSIV closure does not meet the definition of "Loss of normal heat removal path" provided in NEI 99-02, Rev. 2, page 15, line 37, and it is appropriate not to include this event in the associated performance indicator – Unplanned Scrams with Loss of Normal Heat Removal. Discussion of specific aspects of the event: Was the recognition of the condition from the Control Room? ▪ Yes. Rising temperature in the Outboard MSIV Room is indicated by annunciator in the main control room. Local radiation levels are also available in the control room. During the July 22, 2003 scram, control room operators also recognized that the increase in temperature was not due to a steam leak in the Outboard MSIV Room because the local radiation monitor did not indicate an increase in radiation levels. Initiation of the Group I isolation on a Steam Tunnel High Temperature is indicated by two annunciators in the control room. Does it require diagnosis or was it an alarm? ▪ The event is annunciated in the control room as described previously. Is it a design issue? ▪ Yes. The current Unit 2 design has the Group I isolation temperature elements closer to the Outboard MSIV Room ventilation exhaust as compared to Unit 3. As a result, the baseline temperatures, which input into the Group I isolation signal, are higher on Unit 2 than Unit 3. Are actions virtually certain to be successful? ▪ The actions to reset a Group I isolation are straight forward and the procedural guidance is provided to operate the associated equipment. No diagnosis or troubleshooting is required. Are operator actions proceduralized? ▪ The actions to reset the Group I isolation are delineated in General Plant procedure GP-8.A "PCIS Isolation-Group I." The actions to reopen the MSIVs are contained in System Operating procedures SO 1A.7.A-2 "Main Steam System Recovery Following a Group I Isolation" and Check Off List SO 1A.7.A-2 "Main Steam Lineup After a Group I Isolation." These procedures are performed from the control room. How does Training address operator actions? ▪ The actions necessary for responding to a Group I isolation and subsequent recovery of the Main Steam system are covered in licensed operator training. Are stressful or chaotic conditions during or following an accident expected to be present? • As was demonstrated in the event of July 22, 2003, sufficient time existed to stabilize RPV level and pressure control and methodically progress through the associated procedures to reopen the MSIVs without stressful or chaotic conditions		
		Response: The Peach Bottom Unit 2 July 22, 2003 reactor scram followed by a high area temperature Group I isolation should not be included in the Performance Indicator - "Unplanned Scram with a Loss of Normal Heat Removal." This specific MSIV closure does not meet the definition of "Loss of normal heat removal path" provided in NEI 99-02, Rev. 2, page 15, line 37, in that the main steam system was "easily recovered from the control room without the need for diagnosis or repair. Therefore, it would not be appropriate to include this event in the associated performance indicator – Unplanned Scrams with Loss of Normal Heat Removal.		
36.8	IE02	Question: On August 14, 2003 Ginna Station scrammed due to the wide spread grid disturbance in the Northeast United States.	1/22 Introduced 3/25 Discussed	Ginna

TempNo.	PI	Question/Response	Status	Plant/ Co.
		Subsequent to the scram, Main Feedwater Isolation occurred as designed on low Tavg coincident with a reactor trip. However, due to voltage swings from the grid disturbance, instrument variations caused the Advanced Digital Feedwater Control System (ADFCS) to transfer to manual control. This transfer overrode the isolation signal causing the Main Feedwater Regulation Valves (MFRVs) to go to, and remain at, the normal or nominal automatic demand position at the time of the transfer, resulting in an unnecessary feedwater addition. The feedwater addition was terminated when the MFRVs closed on the high-high steam generator level (85%) signal. Operators conservatively closed the MSIVs in accordance with the procedure to mitigate a high water level condition in the Steam Generators. Decay heat was subsequently removed using the Atmospheric Relief Valves (ARVs). Should the scram be counted under the PI "Unplanned Scrams with Loss of Normal Heat Removal?" Response: No. Under clarifying notes, page 16, lines 18 - 22, NEI 99-02 states: "Actions or design features to control the reactor cool down rate or water level, such as closing the main feedwater valves or closing all MSIVs, are not reported in this indicator as long as the normal heat removal path can be readily recovered from the control room without the need for diagnosis or repair. However, operator actions to mitigate an off-normal condition or for the safety of personnel or equipment (e.g., closing MSIVs to isolate a steam leak) are reported." In this case, a feedwater isolation signal had automatically closed the main feed regulating valves, effectively mitigating the high level condition. Manually closing the MSIVs was a conservative procedure driven action, which in this case was not by itself necessary to protect personnel or equipment. The main feed regulating valves were capable of being easily opened from the control room, and the MSIVs were capable of being opened from the control room (after local action to bypass and equalize pressure, see FAQ 303). In addition, the cause of the high steam generator level was due to voltage fluctuations on the offsite power grid which resulted in the operators closing the MSIVs. Clarifying notes for this performance indicator exempt scrams resulting in loss of all main feedwater flow , condenser vacuum, or turbine bypass capability caused by loss of offsite power. In this case, offsite power was not lost. However, the disturbances in grid voltage affected the ADFCS system which started a chain of events which ultimately resulted in the closure of the MSIVs.	6/16 Discussed	
36.9	IE02	Question: During startup activities following a refueling outage in which new monoblock turbine rotors were installed in the LP turbines, reactor power was approximately 10% of rated thermal power, and the main turbine was being started up. Feedwater was being supplied to the steam generators by the turbine driven main feedwater pumps, and the main condensers were in service. During main turbine startup, the turbine began to experience high bearing vibrations before reaching its normal operating speed of 1800 rpm, and was manually tripped. The bearing vibrations increased as the turbine slowed down following the trip. To protect the main turbine, the alarm response procedure for high-high turbine vibration required the operators to manually SCRAM the reactor, isolate steam to the main condensers by closing the main steam isolation valves and to open the condenser vacuum breaker thereby isolating the normal heat removal path to the main condensers. This caused the turbine driven main feedwater pumps to trip. Following the reactor SCRAM, the operators manually started the auxiliary feedwater pumps to supply feedwater to the steam generators. Based on industry operating experience, operators expected main turbine vibrations during this initial startup. Nuclear Engineering provided Operations with recommendations on how to deal with the expected turbine vibration issues that included actions up to and including breaking condenser vacuum. Operations prepared the crews for this turbine startup with several primary actions. First, training on the new rotors, including industry operating experience and technical actions being taken to minimize the possibility of turbine rubs was conducted in the pre-outage Licensed Operator Requalification Training. Second, the Alarm Response Procedures (A-34 and B-34) for turbine vibrations were modified to include procedures to rapidly slow the main turbine to protect it from damage. Under the worst	1/22 Introduced 3/25 Discussed. Question to be rewritten and response provided 4/22 Question and response provided 6/16 Discussed 7/22 Discussed 8/18 Discussed	Millstone 2

TempNo.	PI	Question/Response	Status	Plant/ Co.
		turbine vibration conditions, the procedure required operators to trip the reactor, close MSIVs and break main condenser vacuum. Third, operating crews were provided training in the form of a PowerPoint presentation for required reading which included a description of the turbine modifications, a discussion of the revised Alarm Response Procedures and industry operating experience. Does this SCRAM count against the performance indicator for scrams with loss of normal heat removal? Response: No, this scram does not count against the performance indicator for scrams with loss of normal heat removal. The conditions that resulted in the closure of the MSIVs after the reactor trip were expected for the main turbine startup following rotor replacement. Operator actions for this situation had been incorporated into normal plant procedures.		
37.3	OR1	Question: The definition of the Occupational Exposure Control Effectiveness performance indicator refers to "measures that provide assurance that inadvertent entry into the technical specification high radiation areas by unauthorized personnel will be prevented" (page 98, NEI 99-02, Revision 2). In the context of applying the performance indicator definition in evaluating physical barriers to control access to technical specification high radiation areas, what is meant by "inadvertent entry"? Response: In reference to application of the performance indicator definition in evaluating physical barriers, the term "inadvertent entry" means that the physical barrier can not be easily circumvented (i.e., an individual who incorrectly assumes, for whatever reason, that he or she is authorized to enter the area, is unlikely to disregard, and circumvent, the barrier). The barriers used to control access to technical specification high radiation areas should provide reasonable assurance that they secure the area against unauthorized access.	3/25 Introduced 4/22 Directed to HP counterparts for review 5/27 To be revised by HP counterparts 7/22 Revised 8/18 Tentative Approval	NRC
37.5	OR1	Question: A worker entered a Technical Specification High Radiation Area (> 1R/hr) with all requirements of the job (training, briefings, dosimetry, ALARA Plan and RWP requirements, electronic dosimetry, etc.). The worker did not perform the RWP process auto-sign-in on the RWP, which would have electronically checked the worker's 700 mrem administrative RWP buffer. Not performing this auto-sign-in process did not violate the primary means of controlling access and did not invalidate the RWP for the job. The RWP stated that 700 mrem dose availability was required prior to entry. This administrative dose buffer is an additional defense-in-depth, licensee-initiated control to protect against exceeding the licensee's system of dose control and is not utilized to control dose. The worker's actual dose did not exceed the electronic dosimeter set point and the minimum administrative control guideline. The dose availability of the worker is defined as the difference between the site-specific administrative control level of 2000 mrem (significantly below Federal Limits) and the worker's current accumulated dose for the year. An ALARA Plan and RWP controlled the work activity. The individual used teledosimetry with predetermined alarm setpoints for the job, which transmitted dose and dose rate information during the entry. Video surveillance was utilized by radiation protection technicians and in compliance with 10CFR20.1601(b) during the entry into the >1R/hr area. Specific authorization was given by the remote monitoring station technician to enter into the area. The worker had the training and respiratory protection qualifications required by the RWP, multiple TLDs had been issued, the required RWP was obtained and signed, and briefings were attended. The RWP entry was accomplished within pre-determined stay-time limitations, as discussed in the worker briefing. The electronic entry time was entered after the worker had exited the area. There was no over exposure or unintended dose for this worker. The work was completed within the maximum projected dose for the activity. Technical Specification requirements for control of entry into the high radiation area were met and worker dose was controlled since the worker was authorized and had obtained the RWP for the job.	3/25 Introduced 4/22 Being revised by licensee 5/27 Revised To be reviewed by HP counterparts 8/18 Tentative Approval	TMI

TempNo.	PI	Question/Response	Status	Plant/ Co.
		The primary means of control of occupational dose exposure include pre-determined stay-time limitations and alarming dosimetry set below expected job levels. The administrative control level is an additional exposure control mechanism. The licensee's administrative control level is conservatively established at 2 rem, or 40% of the Federal dose limit, to provide a substantial margin to prevent personnel from exceeding the Federal dose limit of 5 rem and to help ensure equitable distribution of dose among workers with similar jobs. The individual's annual dose was well below 2 rem and the administrative control level had not been raised above 2 rem prior to the worker obtaining a TLD. If needed, additional and higher levels of managerial review and authorization are required for higher dose control levels. Increasing levels of management review and approvals are required to exceed the administrative control level of 2000 mrem (i.e., to 3000 mrem requires written approval by the Radiation Protection Manager and the work group supervisor, to 4000 mrem requires written approval by the Radiation Protection Manager, work group supervisor, and Plant Manager, to 5000 mrem requires written approval by the Site Vice President). The administrative dose buffer is in addition to the Technical Specification requirements for an RWP and therefore not material to the Technical Specification requirements for control of occupational dose. As it is stated in NEI 99-02, "this PI does not include nonconformance with licensee-initiated controls that are beyond what is required by technical specifications and the comparable provisions in 10CFR Part 20." The check of dose availability is a licensee-initiated administrative control that is beyond what is required by technical specifications, comparable provisions in 10CFR20, or Regulatory Guide 8.38. Does failure of the worker to meet the internal administrative control guideline for dose available as specified by the RWP for the job activity count as a PI occurrence? Response: Yes this event would be a reportable PI occurrence. The above clearly describes a nonconformance with an RWP procedural requirement that resulted in a loss of control of access to the Tech. Spec. High Radiation Area. Had the RWP procedure been adhered to, this individual would not have been allowed to enter without further approval.		
37.6	BI02	Question: River Bend Station (RBS) seeks clarification of BI-02 information contained in NEI 99-02 guidance, specifically page 80, lines 36 and 37 *"Only calculations of RCS leakage that are computed in accordance with the calculational methodology requirements of the Technical Specifications are counted in this indicator."* NEI 99-02, Revision 2 states that the purpose for the Reactor Coolant System (RCS) Leakage Indicator is to monitor the integrity of the reactor coolant system pressure boundary. To do this, the indicator uses the identified leakage as a percentage of the technical specification allowable identified leakage. Moreover, the definition provided is "the maximum RCS identified leakage in gallons per minute each month per technical specifications and expressed as a percentage of the technical specification limit." The RBS Technical Specification (TS) states "Verify RCS unidentified LEAKAGE, total LEAKAGE, and unidentified LEAKAGE increase are within limits (12 hour frequency)." RBS accomplishes this surveillance requirement using an approved station procedure that requires the leakage values from the 0100 and 1300 calculation be used as the leakage "of record" for the purpose of satisfying the TS surveillance requirement. These two data points are then used in the population of data subject to selection for performance indicator calculation each quarter (highest monthly value is used). The RBS approved TS method for determining RCS leakage uses programmable controller generated points for total RCS leakage. The RBS' programmable controller calculates the average total leakage for the previous 24 hours and	3/25 Introduced 4/22 Discussed 5/27 Discussed 8/18 Tentative Approval	River Bend

TempNo.	PI	Question/Response	Status	Plant/ Co.
		prints a report giving the leakage rate into each sump it monitors, showing the last four calculations to indicate a trend and printing the total unidentified LEAKAGE, total identified LEAKAGE, their sum, and the 24 hour average. The programmable controller will print this report any time an alarm value is exceeded. The printout can be ordered manually or can be automatic on a 1 or 8 hour basis. While the equipment is capable of generating leakage values at any frequency, the equipment generates hourly values that are summarized in a daily report. The RBS' TS Bases states "In conjunction with alarms and other administrative controls, a 12 hour Frequency for this Surveillance is appropriate for identifying changes in LEAKAGE and for tracking required trends." The Licensee provides that NEI 99-02 requires only the calculations performed to accomplish the approved TS surveillance using the station procedure be counted in the RCS leakage indicator. In this case, the surveillance procedure captures and records the 0100 and 1300 RCS leakage values to satisfy the TS surveillance requirements. The NRC Resident has taken the position that all hourly values from the daily report should be used for the RCS leakage performance indicator determination, even though they are not required by the station surveillance procedure. The Resident maintains that all hourly values use the same method as the 0100 and 1300 values and should be included in the leakage determination. Is the Licensee interpretation of NEI 99-02 correct? Response: Appendix D All calculations of RCS leakage that are computed in accordance with the calculational methodology requirements of the Technical Specifications are counted in this indicator. Since the River Bend Station leakage calculation is an average of the previous 24 hourly leakage rates which are calculated in accordance with the technical specification methodology, it is acceptable for River Bend Station to include only those calculations that are performed to meet the technical specifications surveillance requirement when determining the highest monthly values for reporting. The ROP Working Group is forming a task force to review this performance indicator based on industry practices..		
37.9	EP02	Question: NEI 99-02 Rev 2 ERO Participation PI defines the numerator and denominator of the calculation as based on Key ERO Members. The key position list (on page 89 and 90) was originally created from NUREG 0696 key functions~~the NUREG 0654 Table B-1 positions~~ that involved actions associated with the risk significant planning standards (classification, notification, PARs, and assessment), with the addition of the Key OSC Operations Manager included from a mitigation perspective. ~~It is understood that~~ W~~w~~hen a single individual is assigned in more than one 'key position' that individual~~they~~ must be counted ~~individually~~ for each key position (page 91 lines 4-7 of NEI 99-02). Guidance is not provided in the case where more than one key positions is performed by a single member of the ERO in a single drill/exercise~~are not unique to separate ERO members~~. For example, the communicator is defined in NEI 99-02 as the key position ~~individual~~ that fills out the notification form, seeks approval and usually communicates the information to off site agencies (these duties may vary from site to site based on site procedures). Assigning a single member to multiple Key Positions and then only counting the performance for one Key Position could mask the ability or proficiency of the remaining Key Positions. The concern is that an ERO member having multiple Key Positions may never have a performance enhancing experience for all of them, yet credit for participation will be given when any one of the multiple Key Positions is performed.	4/22 Introduced 5/27 Discussed. To be revised to reflect discussion. 7/22 EP peer experts to review this issue 8/18 To be discussed at 9/1 EP public meeting	generic

TempNo.	PI	Question/Response	Status	Plant/ Co.
		When the communicator key position~~activity~~ is performed by an ERO member who is also assigned~~defined by~~ another key position (~~i.e~~e.g., the Shift Manager (Emergency Director)), should participation be counted ~~individually~~ for two key positions or for one key position?~~each function or collectively for the single member?~~		
		Response: Participation by a single member of the ERO performing multiple key positions should be counted for each key position performed. For the situation described, two key positions should be counted. ~~Yes.~~ERO participation should be counted ~~as individual opportunities~~ for each key position~~ERO function~~, even when ~~the key ERO function is performed by~~multiple key positions are assigned to the same ~~qualified~~ ERO member. In the case where a utility has ~~combined the functions of the qualified ERO members as defined in the NEI guidance~~assigned two or more key positions to ~~under~~ a single ERO member~~position~~, each key position ~~those key ERO functions~~ must be counted ~~as separate opportunities~~ in the denominator for each ~~qualified~~ ERO member and credit given in the numerator when the ~~qualified~~ ERO member performs each ~~individual~~ key position~~ERO function~~ "Assigned" as used in this FAQ applies to those ERO personnel filling key positions listed on the licensee duty roster on the last day of the reporting period (quarter). ~~This indicator provides linkage to the DEP PI, measuring the individuals who have performed the key ERO function over all of the assigned qualified ERO members. Assigning a single member to multiple functions and then only counting the performance for one function could mask the ability or proficiency of the remaining functions. The concern is that an ERO member having multiple functions may never have a performance enhancing experience for all of them, yet credit for participation will be given when any one of the multiple functions is performed; particularly, if more than one ERO position is assigned to performed the same function.~~		
38.2	MS01, MS04	Question: If the emergency AC power system or the residual heat removal system is not required to be available for service (e.g., the plant is in "no mode" or Technical Specifications do not require the system to be operable), is it appropriate to include this time in the "hours train required" portion of the safety system performance indicator calculation? NEI 99-02, Revision 2, starting on line 25 of page 33, discusses the term "hours train required" as used in safety system unavailability performance indicators. For the emergency AC power system and residual heat removal system, the guidance allows the "hours train required" to be estimated by the number of hours in the reporting period because the emergency generators are normally expected to be available for service during both plant operations and shutdown, and because the residual heat removal system is required to be available for decay heat removal at all times. The response to FAQ 183 states: "During periods and conditions where Technical Specifications allow both shutdown cooling trains to be removed from service the shutdown cooling system is, in effect, not required and required hours and unavailable hours would not be counted."	5/27 Introduced 7/22 Discussed 8/18 Discussed	
		Response: Being revised		
38.3	MS01	Appendix D FAQ: Mitigating Systems – Safety System Unavailability, Emergency AC Power During a monthly surveillance test of Emergency Diesel Generator 3 (EDG3), an alarm was received in the control room for an abnormal condition. The jacket water cooling supply to EDG3 had experienced a small leak (i.e., less than 1 gpm) at a coupling connection that resulted in a low level condition and subsequent control room alarm. The Low Jacket Water Pressure Alarm, which annunciates locally and in the control room, indicated low pump suction pressure. This was due to low level in the diesel generator jacket water expansion tank. An Auxiliary Operator (AO) stationed at EDG3 responded to the alarm by opening the manual supply valve to provide makeup water to the expansion tank.	6/16 Introduced 7/22 Discussed 8/18 Discussed	Brunswick

TempNo.	PI	Question/Response	Status	Plant/ Co.
		EDG3 continued to function normally and the surveillance test was completed satisfactorily. Review of data determined that improper tightening of the coupling was performed after the monthly EDG run on December 8, which led to an unacceptable leak if the EDG was required to run. The coupling was properly repaired and tested, and declared to be available and operable on January 6. The condition existed for approximately 28 days. Although the recovery action was conducted outside of the main control room, it was a simple evolution directed by a procedure step, with a high probability of success. This operator response is similar to the response described in Appendix D FAQ 301. In addition, this operator action would be successful during a postulated loss of offsite power event, except for a 23 hour period when the demineralized water supply level was too low to support gravity feed. The engineering analysis determined that a level of 21' 5" of demineralized water supply level was necessary to support gravity feed to the expansion tank. Another 9" (4,740 gallons) was added to this level to allow for the leak and nominal usage and makeup over the 24 hour mission time. Using this analysis, any time the demineralized water level fell below 22" 2", the EDG was considered to be unavailable. A human reliability analysis calculated the probability of an AO failing to add water to the expansion tank from receipt of the low pressure alarm to be 4.7 E-3. In other words, there would be a greater than 99.5% probability of successful task completion within twenty minutes of receiving the annunciator. Vendor analysis determined that, with the existing leak rate, the EDG would remain undamaged for twenty minutes. The human reliability analysis considered that the low jacket water pressure would be annunciated in the control room, the annunciator procedure provided specific direction for filling the expansion tank, the action is reinforced through operator training, and sufficient time would be available to perform the simple action. In its calculation of the probability of operator recovery, the analysis also considered that another indicator, a low-level expansion tank alarm was out-of-service during this time period. However, although the low expansion tank alarm was out of service, it results in low pump suction pressure which did annunciate. NEI 99-02 Appendix D lists several issues that may be addressed for exceptions to allow credit for operator compensatory actions to mitigate the effects of unavailability of monitored systems. 1. The capability to recognize the need for compensatory actions – Low pump suction pressure annunciates in the control room. 2. The availability of trained personnel to perform the compensatory action – This is an uncomplicated action, but operators are trained on it. An auxiliary operator simply has to open one manual valve as directed by the annunciator procedure. 3. The means of communications between the control room and the local operator – Communications can be accomplished either via the plant PA system or a portable radio. 4. The availability of compensatory equipment – No compensatory equipment is necessary. 5. The availability of a procedure for compensatory actions – There is an annunciator procedure in the diesel generator room that would direct the auxiliary operator to open the manual valve. 6. The frequency with which the compensatory actions are performed – This action is performed infrequently, but it was demonstrated to be successful during the surveillance test. 7. The probability of successful completion of compensatory actions within the required time – The human reliability analysis determined that there was a 99.5% probability of successful completion of compensatory action within the required time. In summary, over a 28-day period, jacket water cooling for EDG3 was degraded, but functional for approximately 27 days, and was totally unavailable for 23 hours. This is based on a review of Operator logs, plant trending computer points, and flow calculations. During the 27-day degraded period, a simple manual action directed by procedure and		

TempNo.	PI	Question/Response	Status	Plant/ Co.
		performed by an operator would have been used to ensure that jacket water was available. Should fault exposure hours be reported for the 27 days when the Emergency Diesel Generator 3 jacket water was considered to be degraded but functional?		
		Response: No. Unavailable hours need not be reported for this situation. The actions are proceduralized, operators are trained on the procedure, no troubleshooting or diagnosis is necessary, there is a control room alarm to alert the operators to the need for action, and the actions have been demonstrated to be able to be accomplished within the necessary time constraints. Therefore, operator recovery actions are considered to be virtually certain of success.		
38.4	EP03	Question: Pilgrim has 112 sirens which are normally scheduled to be tested for performance indicator purposes once each calendar month (e.g., once during the month of September). This was reflected in procedure as a requirement to test all of the sirens "monthly". The person scheduling the testing of the sirens incorrectly interpreted the procedure's "monthly" frequency consistent with other "monthly" tests as allowing a 25% grace period for scheduling flexibility. As a result, 29 of the siren tests normally scheduled to be performed in September were scheduled to be performed during the beginning of October. On October 1 the status of the siren testing was discussed with other members of the plant staff who understood that the intent of the "monthly" requirement was once per calendar month and that no grace period applied. Immediate actions were taken including performing the remaining 29 tests on an accelerated basis (all satisfactory tested by October 3) and entering the item in the corrective action program. All of the 29 sirens passed the testing performed during the first 3 days of October. The testing was not delayed due to the unavailability or suspected unavailability of the sirens. The reason for the late testing of the equipment was purely an administrative error and not siren functionality related. For plants where siren tests are initiated by the utility, if a scheduled test(s) was not performed due to an administrative issue but the untested siren(s) was not out-of-service for maintenance or repair and was believed to be capable of operation if activated, should the missed tests be considered non-opportunities or failures for performance indicator reporting purposes?	6/16 Introduced 8/18 To be discussed at 9/1 EP public meeting	Pilgrim
		Response: Regularly scheduled tests missed for reasons other than siren unavailability (e.g., out of service for planned maintenance or repair) should be considered non-opportunities. The failure to perform a regularly scheduled test should be entered in the plant's corrective action program and annotated in the comment field on the quarterly data submittal. The failure to perform regularly scheduled tests may be reviewed as part of the baseline inspection process~~Tests missed for reasons other than siren unavailability (e.g., out of service for maintenance or repair) should be considered non-opportunities.~~		
38.9	OR01	Question: On March 4, 2004, workers initiated a series of diving activities related to the inspection and repair of the Steam Dryer in the Dryer Separator Pit. On March 5, 2004, a contract diver proceeded to the Unit 1 Reactor Building 117' Elevation in preparation for the next diving evolution on the Steam Dryer. Based on underwater dose gradients from the steam dryer, 5 Electronic Dosimeters (EDs), 10 thermoluminescent dosimeters (TLDs) and a telemetry transmitter were placed on the diver by a Radiation Protection Technician (RPT) to monitor personnel exposure. ED/TLD combinations were placed on the chest, right arm, left arm, right leg, and left leg. TLDs were use to monitor the extremities. Communication between the EDs and the telemetry system was verified after placement on the diver. The RPT conducted the pre-dive radiological briefing and the diver entered the Contaminated Area. Telemetry problems were experienced prior to the diver entering the Dryer Separator Pit. The underwater antenna was changed out and telemetry problems appeared to be corrected. The diver was in the Dryer Separator Pit approximately 40 minutes when additional telemetry problems occurred. The diver was instructed to exit the water and the	7/22 Introduced 8/18 Additional information required	Brunswick

TempNo.	PI	Question/Response	Status	Plant/ Co.
		transmitter replaced. The telemetry problems were corrected and the diver re-entered the Dryer Separator Pit. After entering the water, the left arm ED stopped communicating with the telemetry system. The telemetry computer was rebooted while the diver was in the Dryer Separator Pit, but the left arm ED failed to transmit. The RP Supervisor evaluated the situation and decided to allow the dive to continue since four of the five EDs were transmitting properly. The left arm ED did not transmit for the remainder of the dive. However, it did remain functional and continued to accumulate dose. Upon completion of the work, the diver exited the Dryer Separator Pit and it was discovered that his left arm ED was in alarm. Specific ED results for the diver are given below: ED Location / ED Result (mrem) Chest 147 Right Arm 319 Left Arm 588 Right Leg 30 Left Leg 31 Per the RWP, the Administrative Dose Limit for the dive was 500 mrem. The diver's TLDs were processed and the results are given below TLD Location / TLD Result (mrem) Chest 135 Right Arm 403 Left Arm 673 Right Leg 30 Left Leg 34 Head 216 Does the situation described above constitute an unintended exposure occurrence in the Occupational Radiation Safety Cornerstone as described in NEI 99-02? Response: NEI 99-02 identifies the dose value used as a screening criterion to identify an unintended exposure occurrence as 100 mrem. The administrative dose guideline was established in the RWP as 500 mrem. Since the ED was functional and read 588 mrem, the screening criterion in 99-02 was not exceeded.		
39.1	IE03	Question: On June 23, 2004, condenser waterbox level and temperature readings on the Unit 1 and 2 main condensers indicated partial blockage of the waterbox intake debris filters. The cause was an influx of gracilaria, which is a marine grass found in the river water that is the circulating water intake supply to the plant. Subsequent backwashes of the debris filters were successful at restoring waterbox level and temperature readings to the normal band, except for the 2B-South waterbox, which is one of four waterboxes of the Unit 2 main condenser. An extended backwash was unsuccessful in restoring its readings back to normal. Debris is removed prior to entering the circulating water intake bay by traveling screens with spray nozzles. The 2B-South debris filter is directly downstream from the 2D traveling screen. Investigation of this event found that the spray nozzles for the 2D traveling screen had more fouling than the other spray nozzles. The 2D traveling screen was able to adequately remove normal debris loading, but was not as effective as the other spray nozzles in removing the debris during the large influx of gracilaria. A decision was made on June 24, 2004 to reduce power to about 53% and isolate the 2B-South waterbox to clean its debris filter. The decision to reduce power within 24 hours was based on several factors, such as reduced condenser efficiency, the potential for additional debris filter clogging, and a reduction in reactor water chemistry due to elevated	8/18 Introduced	Brunswick

TempNo.	PI	Question/Response	Status	Plant/ Co.
		condensate demineralizer resin temperatures. It was also based on input from work management, operations, and the load dispatcher. The 2B-South waterbox was successfully cleaned during the downpower and reactor power was restored to normal operating conditions. This was an anticipated power change in response to expected conditions. Operating experience has shown that the plant is susceptible to large influxes of gracilaria when the salinity level in the river water is elevated. For example, gracilaria problems were correlated with high salinity levels in 2002, which led to high vulnerability conditions. In addition, during another influx of gracilaria, a downpower was required in August, 2001 to clean the 1A-South debris filter. In response to experience over the past 5 years with gracilaria and other intake canal debris, modifications are being implemented at the river water intake diversion structure, which is the first barrier for intake debris, to improve the debris removal capability. In response to the influx of gracilaria, the plant implemented compensatory actions for a "High Vulnerability" condition in the intake canal. These actions include manning the diversion structure round-the-clock for manual debris removal, increasing screen wash pressure, and staging fire hoses at the traveling screens, if needed, to assist in removing debris. During the June 23 event, all four waterboxes on Unit 1 and three of four waterboxes on Unit 2 were managed within normal operating levels. The power change was proceduralized. The plant operating procedure for circulating water directs a power reduction to isolate a waterbox and clean the debris filter if an abnormally high differential pressure exists after debris filter flushing has been completed. The influx of gracilaria was not predictable greater than 72 hours in advance. Although the biology staff has found that high salinity levels in the river water make the conditions for a gracilaria release favorable, it is not possible to predict when an excessive influx will occur. The compensatory actions taken for a high vulnerability condition have usually been effective in preventing debris filter clogging. Should this event be counted as an unplanned power change? Response: No, the event should not be counted as an unplanned power change. The increased accumulation of gracilaria in the river water was anticipated due to operating experience with high salinity levels in the river water, but the timing of the gracilaria release into the intake canal could not be predicted with certainty. In addition, the response to the condenser level and temperature conditions is proceduralized.		
39.2	EP03	Question: If a licensee makes a change in ANS testing methodology, when can that change be used in the ANS PI calculation? Response: The change in test methodology shall be reported as part of the ANS Reliability Performance Indicator effective the start of the next quarterly reporting period. A licensee may change ANS test methodology at any time consistent with regulatory guidance. For the purposes of the Performance Indicator, only the testing methodology in effect on the first day of the quarter shall be used for that reporting period. NEI 99-02 requires that the periodic tests be used in developing the Performance Indicator. Pg 94, lines 12-13, states that: "Periodic tests are the regularly scheduled tests..." Therefore, a reporting period (quarter) starts with a sequence of regularly scheduled tests for that quarter. If a licensee determines that testing methodology should be changed, the plan/procedure directing the periodic tests should be revised and screened in accordance with the licensee's change process~~The change may not be used in the ANS PI calculation until the beginning of the next quarter. This is consistent with NEI 99-02, pg 94, lines 12-13, that states: "Periodic tests are the regularly scheduled tests..." Thus, the regularly scheduled test methodology that was used at the beginning of the quarter is to be used throughout the quarter for input to the ANS PI data. This is necessary to ensure the consistency and validity of the quarterly ANS PI data. As a reminder, if the change in ANS test methodology is considered to be a significant change~~	8/18 Introduced. To be discussed at 9/1 EP public meeting	NRC

TempNo.	PI	Question/Response	Status	Plant/ Co.
		~~per FEMA requirements, the change is required to have FEMA approval prior to implementation.~~		

Attachment 6

Monitoring Of Unavailability During Shutdown Conditions

Unavailability monitoring during shutdown is unnecessary because it captures only a fraction of a fraction of overall unavailability. First, with average refueling durations in the 30 day range (every 18 to 24 months), any unavailability is a small fraction of the overall cycle (approximately 4%). Secondly, to count as unavailability during shutdown under NUMARC 93-01, Appendix B, the train has to fail in service or when it is the primary backup for a function. This will only capture unplanned unavailability, which is also a very small fraction of overall unavailability. Thus, to simplify both the Mitigating System Performance Index (MSPI) and maintenance rule accounting (and to make them consistent), unavailability monitoring during shutdown will be eliminated when MSPI is implemented. The unavailability data that will no longer be captured is not significant to the monitoring of system health under the maintenance rule. Reliability data will continue to be captured for both maintenance rule and MSPI during shutdown. For the purpose of balancing unavailability and unreliability per section (a)(3) of the maintenance rule, the assessment will continue to consider all unreliability data captured during at power and shutdown operations, and the unavailability data captured during power operations. For the reasons noted above, any unavailability during shutdown is not significant to the (a)(3) assessment.

Attachment 7

Appendix D
PUBLIC RADIATION SAFETY
SIGNIFICANCE DETERMINATION PROCESS

This process is used in conjunction with Inspection Procedure 71122, "Public Radiation Safety," to determine the risk significance of a finding.

III. RADIOACTIVE MATERIAL CONTROL PROGRAM

A. Objective

This branch of the logic diagram focuses on the licensee's radioactive material control program. It assesses the licensee's ability to prevent the inadvertent release and/or loss of control of licensed radioactive material.

B. Basis

10 CFR Part 20 contains the requirements for the control and disposal of licensed radioactive material. At a licensee's facility, any equipment or material that came into contact with licensed radioactive material or that had the potential to be contaminated with radioactive material of plant origin and are to be removed from the facility must be surveyed for the presence of licensed radioactive material. This is because NRC regulations, with one exception in 10 CFR 20.2005, provide no minimum level of licensed radioactive material that can be disposed of or released for use in an unrestricted area in a manner other than as radioactive waste or transferred to a licensed recipient.

C. SDP DETERMINATION PROCESS

Is there a finding in the licensee's radiological material control program that is contrary to NRC regulations and/or the licensee's program? If yes, the question is what is the dose impact? Note: The dose assessment is to be based on an actual or realistic scenario. If the dose impact was not greater than 0.005 rem total effective dose equivalent (TEDE), then the SDP classification is GREEN. If the dose impact was greater than 0.005 rem TEDE, but ≤ 0.1 rem TEDE, then the SDP classification is WHITE. If the dose impact was greater than 0.1 rem TEDE (exceeds 10 CFR Part 20 public dose limit), but ≤ 0.5 rem TEDE, the SDP classification is YELLOW. If the dose impact was greater than 0.5 rem TEDE, the SDP classification is RED.

A finding represents a failure or performance deficiency of the licensee's Radiation Protection program. An inspection finding is defined as: 1) licensed radioactive material identified outside of a Protected Area, Restricted Area (as defined in 10 CFR Part 73 and Part 20, respectively), or an area defined by the licensee in which licensed radioactive material is controlled, and 2) an evaluation which concluded that the material was released as a result of a) not following plant procedures, b) not being in accordance with documented training, c) inadequate plant procedures, or d) inadequate training. A performance deficiency would not be the following: 1) licensed radioactive material that is below the radiation detection sensitivity of the instruments used (in a manner that is reasonable under the circumstances) for the survey and control of licensed radioactive material, or 2) licensed radioactive material that was released in accordance with the licensee's radioactive gaseous and liquid effluent release program.

Individuals who are not authorized to receive "occupational dose" are classified as "Members of the Public." Sometimes these individuals are permitted access to a licensee's Protected or Restricted Area for job-related or public information purposes. Such individuals are either physically escorted or are granted limited unescorted access following the successful completion of appropriate orientation training and security screening. The significance of the radioactive material control finding involving licensed radioactive material in a Protected Area, Restricted Area, or an area defined by the licensee in which licensed radioactive material is controlled will be evaluated using the dose-based criteria in the SDP.

In the evaluation of a potential finding, consideration should be given to whether it is a minor issue. To be considered minor, there must be no dose impact to a member of the public. In practice, this means that the whole body dose rate (measured by a qualified individual, in a low background area, at a distance of 30 cm from the unshielded material with a "micro-rem" per-hour type instrument which typically uses a 1" by 1" scintillation detector) from the item or material is indistinguishable from background. However, the presence of licensed radioactive material, regardless of whether it meets the minor criteria described above, in an unrestricted area is a condition that warrants documentation in an NRC Inspection Report (see NRC Manual Chapter 0612, Section 05.03.d). This is because licensed radioactive material in the public domain directly relates to an issue of agency-wide concern (Disposition of Solid Materials).

In an inspection report, it is acceptable to document multiple instances of licensed radioactive material being identified outside of a Protected Area, Restricted Area, or an area defined by the licensee in which licensed radioactive material is controlled, as a single finding in the following circumstances: 1) instances that do not represent a performance deficiency and 2) licensee identified instances that represent a performance deficiency that stem from a common root cause or are the result of investigations and surveys conducted in conjunction with a corrective action plan or a general site survey upgrade program.

A finding which involves discrete radioactive particles (also known as hot particles or fuel fleas) will be assessed in the same manner as discussed above (i.e., based on the actual or realistic dose impact [TEDE] to a member of the public).

END