Westinghouse Non-Proprietary Class 3

WCAP-14572
Revision 1-NP-A

Westinghouse Owners Group Application of Risk-Informed Methods to Piping Inservice Inspection Topical Report

Westinghouse Electric Company LLC

WESTINGHOUSE OWNERS GROUP APPLICATION OF RISK-INFORMED METHODS TO PIPING INSERVICE INSPECTION TOPICAL REPORT

Revision 1-NP-A

Technical Leads

K.R. Balkey N.B. Closky

Westinghouse Project Team

B.A. Bishop R.L. Haessler R. K. Perdue

Northeast Utilities Project Team Leads

R. A. West E.A. Oswald

NU Team Members

G. A. Gardner G. E. Miemiec
Y. F. Khalil T. L. Hamlin

Virginia Power Project Team Leads

A. McNeill D. M. Bucheit

Virginia Power Project Team Members

L. L. Spain N. J. Shah A. Afazali (Scientech)

February 1999

Approved by: _____
Stephen B. Fowler, Manager, Reliability and Risk Assessment

Work Performed by Westinghouse Electric Company in collaboration with Northeast Utilities and Virginia Power for the Westinghouse Owners Group Under MUHP-5090, MUHP-5091, and MUHP-5092

Westinghouse Energy Systems
P.O. Box 355, Pittsburgh, PA 15230

UNITED STATES
NUCLEAR REGULATORY COMMISSION
WASHINGTON, D.C. 20555-0001

December 15, 1998

Mr. Lou Liberatori, Chairman
Westinghouse Owners Group Steering Committee
Indian Point Unit 2
Broadway & Bleakley Ave.
Buchanan, NY 10511

SUBJECT: SAFETY EVALUATION OF TOPICAL REPORT WCAP-14572, REVISION 1, "WESTINGHOUSE OWNERS GROUP APPLICATION OF RISK-INFORMED METHODS TO PIPING INSERVICE INSPECTION TOPICAL REPORT"

The NRC staff has completed its review of the subject topical report which was submitted by the Westinghouse Owners Group (WOG) through the Nuclear Energy Institute (NEI) by letter dated October 10, 1997. The staff has found that this report is acceptable for referencing in licensing applications to the extent specified and under the limitations delineated in the report and the associated NRC safety evaluation, which is enclosed. The safety evaluation defines the basis for acceptance of the report.

Current inspection requirements for commercial nuclear power plants are contained in the 1989 edition of Section XI, Division 1 of the American Society of Mechanical Engineers (ASME) Boiler and Pressure Vessel Code (BPVC), entitled *Rules for Inservice Inspection of Nuclear Power Plant Components.* WCAP-14572, Revision 1, provides technical guidance on an alternative for selecting and categorizing piping components into high safety-significant (HSS) and low safety-significant (LSS) groups for the purpose of developing a risk-informed inservice inspection (ISI) program as an alternative to the ASME BPVC Section XI ISI requirements for piping. The RI-ISI programs can enhance overall safety by focusing inspections of piping at HSS locations and locations where failure mechanisms are likely to be present, and by improving the effectiveness of inspection of components by focusing on personnel qualifications, inspection for cause, and the use of the expert panel. The WCAP provides details required to incorporate risk-insights when identifying locations for inservice inspections of piping, in accordance with the general guidance provided in Regulatory Guide (RG)-1.174 and RG-1.178.

The staff will not repeat its review of the matters described in the WOG Topical Report WCAP-14572, Revision 1, when the report appears as a reference in license applications, except to ensure that the material presented applies to the specific plant involved. In accordance with procedures established in NUREG-0390, the NRC requests that WOG publish accepted version of the submittal, within 3 months of receipt of this letter. The accepted version shall incorporate this letter and the enclosed safety evaluation between the title page and the abstract and an -A (designating accepted) following the report identification symbol.

If the NRC's criteria or regulations change so that its conclusion that the submittal is acceptable are invalidated, WOG and/or the applicant referencing the topical report will be expected to revise and resubmit its respective documentation, or submit justification for the continued applicability of the topical report without revision of the respective documentation.

Should you have any questions or wish further clarification, please call me at (301) 415-1282 or Syed Ali at (301) 415-2776.

Sincerely,

Thomas H. Essig, Acting Chief
Generic Issues and Environmental Branch
Division of Reactor Program Management
Office of Nuclear Reactor Regulation

Project No. 694

Enclosure: Safety Evaluation

cc w/enc: See next page

UNITED STATES
NUCLEAR REGULATORY COMMISSION
WASHINGTON, D.C. 20555-0001

SAFETY EVALUATION BY THE OFFICE OF NUCLEAR REACTOR REGULATION

WCAP-14572, REVISION 1, "WESTINGHOUSE OWNERS GROUP

APPLICATION OF RISK-INFORMED METHODS

TO PIPING INSERVICE INSPECTION TOPICAL REPORT"

Enclosure

TABLE OF CONTENTS

ABBREVIATIONS

ASME	American Society of Mechanical Engineers
BWR	Boiling Water Reactor
CDF	Core Damage Frequency
CRGR	Committee to Review Generic Requirements
EC	Erosion Corrosion
EPRI	Electric Power Research Institute
FAC	Flow-assisted Corrosion
FSAR	Final Safety Analysis Report
IGSCC	Intergrannular Stress Corrosion Cracking
ISI	Inservice Inspection
LERF	Large Early Relief Frequency
MOV	Motor-operated Valves
NDE	Nondestructive Examination
NEI	Nuclear Energy Institute
POD	Probability of Detection
PRA	Probabilistic Risk Assessment
PWR	Pressurized Water Reactor
RAW	Risk Achievement Worth
RCS	Reactor Coolant System
RG	Regulatory Guide
RI-ISI	Risk-informed Inservice Inspection
RRW	Risk Reduction Worth
SER	Safety Evaluation Report
SRP	Standard Review Plan
SRRA	Structural Reliability and Risk Assessment
WOG	Westinghouse Owners Group

SAFETY EVALUATION REPORT RELATED TO "WESTINGHOUSE OWNERS GROUP APPLICATION OF RISK-INFORMED METHODS TO PIPING INSERVICE INSPECTION" (TOPICAL REPORT WCAP-14572, REVISION 1)

1.0 INTRODUCTION

On October 10, 1997, Nuclear Energy Institute (NEI), on behalf of Westinghouse Owners Group (WOG), submitted Revision 1 of Topical Report, WCAP-14572, "Westinghouse Owners Group Application of Risk-Informed Methods to Piping Inservice Inspection," (Ref. 1) for review and approval by the staff of the U. S. Nuclear Regulatory Commission (NRC). Supplement 1, "Westinghouse Structural Reliability and Risk Assessment (SRRA) Model for Piping Risk-Informed Inservice Inspection, " (Ref. 2) was included as part of that submittal.

WCAP-14572, Revision 1, provides technical guidance on an alternative for selecting and categorizing piping components as high safety-significant (HSS) or low safety-significant (LSS) groups in order to develop a risk-informed inservice inspection (ISI) program as an alternative to the American Society of Mechanical Engineers (ASME) BPVC Section XI ISI requirements for piping. Current inspection requirements for commercial nuclear power plants are contained in the 1989 Edition of Section XI, Division 1 of the ASME Boiler and Pressure Vessel Code (BPVC), entitled "Rules for Inservice Inspection of Nuclear Power Plant Components", (the Code). The risk-informed inservice inspection (RI-ISI) programs enhance overall safety by focusing inspections of piping at HSS locations and locations where failure mechanisms are likely to be present, and by improving the effectiveness of inspection of components because the examination methods are based on the postulated failure mode and the configuration of the piping structural element. WCAP-14572 provides details required to incorporate risk-insights when identifying locations for inservice inspections of piping, in accordance with the general guidance provided in Regulatory Guide (RG)-1.174 (Ref. 3) and RG-1.178 (Ref. 4).

The WOG has asserted that the WCAP methodology for RI-ISI is a detailed implementation document for ASME Code Case N-577 (Ref. 5). However, the staff has not evaluated Code Case N-577 to determine its acceptability. Also, the staff has not evaluated WCAP-14572 to determine if it is an acceptable document to meet the intent of Code Case N-577.

In developing the methods described in WCAP-14572, Revision 1, the industry incorporated insights gained from two plants, Millstone Unit 3 and Surry Unit 1. The staff's review of WCAP-14572 incorporates information obtained through technical discussions at public meetings and through formal requests for additional information to address the issues related to the analytical methods, observance of the application of the methods to the Surry pilot plant, review of the Surry RI-ISI application, independent audit calculations, and peer reviews of selected technical issues.

2.0 SUMMARY OF THE PROPOSED APPROACH

The scope of the RI-ISI program includes changes in the current ASME XI piping ISI requirements with regard to the number of inspections, locations of inspections, and methods of

inspections. The scope of the RI-ISI program does not include changes in the current ASME XI piping ISI requirements with regard to the inspection intervals and periods, acceptance criteria for evaluation of flaws, expansion criteria for flaws discovered, inspection techniques and personnel qualification. It should also be noted that augmented examination program for degradation mechanisms such as intergrannular stress corrosion cracking (IGSCC) and erosion-corrosion (EC) would remain unaffected by the RI-ISI program.

Page 4 (Section 1.1) of WCAP-14572 states that "This report provides an alternative inspection location selection method for nondestructive examination (NDE) and does not affect current Owner-defined augmented programs." For RI-ISI programs whose scope incorporates augmented inspection programs, the effect of the current augmented programs on risk should be addressed. In most circumstances, the staff believes that the current augmented programs would be found acceptable. However, should the RI-ISI analysis identify that improvements to the augmented programs are warranted to maintain risk at acceptable levels, then those changes should be integrated into the respective programs.

The proposed approach is specifically for the NDE of Class 1 and 2 piping welds, but also includes Class 3 systems and non-Code class components found to be HSS in the risk evaluation. As stated by the Westinghouse Owners Group (WOG), other non-related portions of the Code will not be affected by implementation of WCAP-14572, Revision 1, approach.

The RI-ISI process includes the following steps:

- scope definition
- segment definition
- consequence evaluation
- failure probability estimation
- risk evaluation
- expert panel categorization
- element/NDE selection
- implementation, monitoring, and feedback

3.0 EVALUATION

For this safety evaluation, the NRC staff reviewed the WOG RI-ISI methodology, as defined by WCAP-14572, Revision 1, and its Supplement 1, with respect to the guidance contained in RG 1.178 and Standard Review Plan (SRP) Chapter 3.9.8 (Ref. 6) which describes the acceptable methodology, acceptance guidelines, and review process for proposed plant-specific, risk-informed changes to ISI programs for piping components. Further guidance is provided in RG 1.174 and SRP Chapter 19.0 (Ref. 7) which contains general guidance for using Probabilistic Risk Assessments in risk-informed decision-making.

3.1 Proposed Changes to the ISI Programs

Under the ASME Code, licensees are required to perform inservice inspection (ISI) of Category B-J and C-F piping welds, as well as Examination Category B-F dissimilar metal welds, during

successive 120-month (10-year) intervals. Currently, 25% of all Category B-J piping welds greater than 1-inch nominal diameter are selected for volumetric and/or surface examination on the basis of existing stress analyses. For Category C-F piping welds, 7.5% of non-exempt welds are selected for surface and/or volumetric examination. Under Examination Category B-F, all dissimilar metal welds require volumetric and/or surface examination.

Pursuant to Title 10, Section 50.55a(a)(3)(i), of the *Code of Federal Regulations* (10 CFR 50.55a(a)(3)(i)), licensees proposing to use WCAP-14572 methodology would propose an alternative to the ASME Code examination requirements for piping ISI at their plants. As stated in Section 1.2 of WCAP-14572, Revision 1, the RI-ISI program is intended to improve ISI effectiveness by focusing inspection resources on HSS locations where failure mechanisms are likely to occur. Therefore, the proposed approach meets the intent of ASME Section XI that the flaws are found before they lead to leakage and therefore the approach provides an acceptable level of safety.

Augmented examination program for degradation mechanisms such as IGSCC and EC would remain unaffected by the RI-ISI program. As stated in the WCAP-14572 (page 80, Section 3.5.5) and reiterated in the public meeting (item 11, Ref. 8) with Westinghouse on September 22, 1998, no changes to the augmented inspection programs are being made with the proposed change to the ASME Section XI Program. For calculating risk rankings, augmented programs such as erosion-corrosion and stress corrosion cracking programs are credited when the augmented program is deemed adequate to detect relevant degradation mechanisms. Augmented programs are also credited in the change of risk evaluation for both ASME Section XI programs and RI-ISI programs.

Sections 1.1 and 1.4 of WCAP-14572, Revision 1, describe the proposed changes to the ISI program that would result from applying this methodology. Details of the proposed changes (that is, the specific pipe systems, segments, and welds, as well as the specific revisions to inspection scope, locations, and techniques) are plant-specific and, therefore, are not directly applicable to this evaluation. Section 3.2 of WCAP-14572 describes the process for identifying the piping systems to be included in the scope of the RI-ISI program. Plant functions are considered in the expert panel review process during the consequence evaluation. In response to the staff open item 8(a) (Ref. 9), WCAP-14572 is being revised (Ref. 8) to state that the safety functions of the system and piping segment being reviewed should be presented to the expert panel to ensure that the expert panel specifically addresses the relationship between the systems and piping being evaluated and their associated plant safety functions. WCAP Sections 3.5.2 and 3.5.3 address how industry and plant-specific experience are considered as part of the evaluation process. Finally, Sections 4.4 and 4.5 of WCAP-14572 provide examples from the pilot studies of revisions to inspection scope, locations, and techniques.

3.2 Engineering Analysis

According to the guidelines in RGs 1.174 and 1.178, the licensees proposing an RI-ISI program should perform an analysis of the proposed changes using a combination of engineering analysis with supporting insights from a probabilistic risk assessment (PRA). For the RI-ISI program, engineering analysis includes determining the scope of piping systems included in the RI-ISI program, establishing the methodology for defining piping segments, evaluating the failure

potential of each segment, and determining the consequences of failure of piping segments. The following subsections discuss each of these aspects in greater detail.

3.2.1 Scope of Piping Systems

In accordance with the guidelines in Section 1.3 of RG 1.178, the staff has determined that full scope and partial scope options are acceptable for RI-ISI programs for piping. The full scope option includes ASME Class 1, 2, and 3 piping and piping whose failure would compromise safety related structures, systems, or components (SSC), and non-safety related piping that are relied upon to mitigate accidents or whose failure could prevent safety-related SSC to perform their function or whose failure could cause a reactor scram or actuation of a safety-related system. For the partial scope option, a licensee may elect its RI-ISI program for a subset of piping classes, for example, Class 1 piping only.

Section 3.2 of WCAP-14572, Revision 1, describes the scope of systems to be considered in an RI-ISI program. WCAP-14572 identifies three criteria for system selection. Criterion 1: all Class 1, 2, and 3 systems currently within the ASME Section XI program; Criterion 2: piping systems modeled in the PRA; and Criterion 3: balance of plant fluid systems determined to be of importance (mainly on the basis of NEI guidance for implementation of the Maintenance Rule with respect to safety significance categorization). The Maintenance Rule scope definition is used to provide a starting point for the determination of the scope of the RI-ISI program.

Section 2.3 of WCAP-14572 states that the scope incorporates piping segment cutsets that cumulatively account for about 90 percent of the core damage frequency attributed from piping alone.

In addressing the exclusion of piping systems from the scope of the RI-ISI program, Section 3.2 of WCAP-14572 includes the following explanation:

> "Twenty-one systems were selected to be evaluated in more detail for the representative WOG plant. The remaining systems are excluded from the scope of the risk-informed ISI program. These systems are not addressed by ASME Section XI, but some were considered by the PRA (such as emergency diesel jacket water, containment instrument air, and instrument air). However, each of these systems was reviewed by the plant expert panel using the same criteria as in the determination of risk-significance for the Maintenance Rule. In addition, the consequences postulated from the loss of any of these systems from a pipe failure were determined not to be significant. Therefore, these systems in their entirety, were determined to be outside the scope and not further evaluated."

In order to allow for partial scope, the next revision of WCAP-14572 will add the following statement in Section 3 and 3.2 as stated on page 264 of Ref. 8:

> "A full scope program is recommended because a greater portion of the plant risk from piping pressure boundary failures is addressed in the risk-informed ISI program versus current ASME Section XI requirements since the examination are now placed in several high-safety-significant piping segments that are not currently examined by the current Section XI approach. However, a partial scope evaluation may be performed given that the evaluation

includes a subset of piping classes, for example, ASME Class 1 piping only, including piping exempt from the current requirements."

The staff finds acceptable the discussion of scope since this definition is consistent with guidance provided in RG 1.178 and SRP Chapter 3.9.8. However, the staff notes that the scope of piping systems for RI-ISI should be plant-specific, and the staff is not endorsing WCAP-14572 pilot list of systems for generic use. The staff also finds acceptable the discussion of partial scope option which is consistent with guidance provided in RG 1.178 and SRP Chapter 3.9.8 which state that the partial scope option is acceptable as long as it is well defined, and the change in risk due to the implementation of the RI-ISI program meets the guidelines in RG 1.174.

3.2.2 Piping Segments

Section 3.3 of WCAP-14572, Revision 1 provides a definition for piping segments. The approach used to define piping segments was based on the following considerations:

(1) piping failures that lead to the same consequence determined from the plant-specific PRA and other considerations (e.g., loss of a residual heat removal (RHR) train, loss of a refueling water storage tank (RWST), inside or outside containment consequences, etc.)

(2) where flow splits or joins

(3) piping to a point where a pipe break could be isolated (This includes check valves and motor-operated or air-operated valves. No credit is generally given for manual valves however, situations may occur where manual valves can be used to isolate a failure by plant operators and, in these cases, the decision for crediting manual valves is made by the plant expert panel and documented as such.)

(4) Pipe size changes

In defining pipe segments, the possibility of check valves and other isolation valves failing to close is not considered; that is, proper operation of the valves is assumed when defining segment boundaries. The staff notes that this assumption will not have a significant impact on the results, since the probability of a valve failing to close is small (ranging from 10^{-2} per demand for motor-operated valves (MOV) to approximately 10^{-4} per demand for check valves) and the consequences from failure will not change in most instances. In addition, when operator action is credited for the isolation of a pipe break, the valve failure probability will be small when compared to the human error probability, and this combined probability will be subject to a sensitivity study as discussed in Section 3.3 of this safety evaluation report (SER). Finally, the treatment of automatic isolation valves will be clarified as follows (item 9 of Ref. 8):

> "Automatic isolation valves are assumed to close if the pipe failure in question would create a signal for the valves to close. Containment isolation valves should be carefully considered for segments which contain the containment penetrations. If the segment consequences are significantly different assuming an automatic and/or containment isolation valve failure, then the piping segment definition should be reviewed and if

necessary, the piping segment should be further combined or subdivided such that the failure of the valve, under pipe failure conditions, would be considered in conjunction with the change in consequences."

The staff finds that the definition of a piping segment, as addressed in Section 3.3 of WCAP-14572, Revision 1 (and subject to the revision noted above) is acceptable since this definition is consistent with the expectations expressed in Section 4.1.4 of RG 1.178 which states that one acceptable approach to divide piping systems into segments is to identify segments as portions of piping having the same consequences of failure in terms of an initiating event, loss of a particular train, loss of a system, or combination thereof. The staff's approval is conditioned upon Westinghouse making the change to WCAP-14572 described above.

3.2.3 Piping Failure Potential

WCAP-14572 methodology is based on industry experience and the Structural Reliability and Risk Assessment (SRRA) computer code to determine the failure probabilities of piping segments. The staff believes that the purpose of the piping failure probability estimation is to provide a relative estimate of the piping failure potential in order to differentiate the piping segments based on potential failure mechanism and postulated consequences. The relative failure probabilities of piping segments provide insights for use by the expert panel in defining the scope of inspection for the RI-ISI program. Section 3.4 of this SER provides a detailed discussion of the qualification and role of the expert panel.

At its briefing in July 1997, the NRC's Committee to Review Generic Requirements (CRGR) requested that the staff should have a peer review performed with regard to using structural reliability and risk assessment computer codes to estimate the probability of a piping failure. The peer review, performed by Battelle-Columbus, and documented in a letter report (Ref. 10), concluded that the SRRA computer code is technically sound and within the state-of-the-art, and that its application can facilitate risk-informed regulatory decision-making in the area of ISI.

Over the past 3 years, as ASME-Research and the WOG developed methods to perform RI-ISI programs for piping, the staff held public meetings with both groups to develop guidelines for acceptable uses of probabilistic fracture mechanics computer codes. In addition, with the assistance of Pacific Northwest National Laboratory (PNNL), the staff performed independent audit calculations to validate the results of the SRRA computer code.

Computer programs CLVSQ and other SRRA computer codes for RI-ISI, such as LEAKMENU and LEAKPROF, were developed, verified and controlled in accordance with the Westinghouse Quality Management System.

Section 3.5 of WCAP-14572, Revision 1 presents general discussion of failure probability determinations; the details of the methodology, process, and rationale are contained in Supplement 1 to the WCAP-14572. This includes piping failure modes, degradation mechanisms, SRRA models, program input, uncertainties, and calculation of failure probability over time. Piping failure potential was determined based on failure probability estimates from the SRRA software program. This software uses Monte-Carlo simulation to calculate the probability of a leak or break for Type 304 or 316 stainless steel piping or for carbon steel piping.

It is recommended in Section 3.5.2, that known failures at other plants be considered and evaluated for applicability.

Section 3.4 of WCAP-14572, Supplement 1, addresses the treatment of uncertainties in the failure probability assessments. The statistical variations for a number of input parameters are discussed therein. Material properties such as yield strength, ultimate strength, fracture toughness, and tearing modulus are not mentioned, but inputs for these properties are more appropriately addressed in plant-specific applications of the program.

WCAP-14572 methodology involves assigning all significant degradation mechanisms present in the segment to a single weld, and imposing the operating characteristics and environment to that weld. The failure probability developed from the Monte-Carlo simulation of this weld is subsequently used to represent the failure probability of the segment, regardless of the number of welds in the segment, or the length of the segment. WCAP-14572 states that this approximation is appropriate since the same loadings occur across the segment and a single weld failure will fail the segment. WCAP-14572 also states that failures in a piping segment due to the dominating failure mechanisms are correlated, and that the failure probability of the weld subject to the dominating mechanisms is typically several orders of magnitude higher than those without the dominating mechanisms. When more than one degradation mechanism is present, the combination of all significant degradation mechanisms for the segment failure probability should produce a limiting failure probability. The output of the SRRA code is thus best described as a relative estimate of the susceptibility of a pipe segment to failure as determined by the weld material and environmental conditions within the segment. The WOG methodology primarily uses these estimates in the following ways:

- Combine with quantitative risk estimates from the PRA to support the expert panel's classification of segments into LSS or HSS.

- Provide guidance regarding the susceptibility of each segment to failure during the sub-panel's selection of welds to be inspected under the RI-ISI program.

Since the WCAP-14572 methodology involves assigning all significant degradation mechanisms present in the segment to a single weld, and imposing the operating characteristics and environment to that weld, the staff finds the methodology acceptable to estimate pipe segment failure probabilities, i.e., the estimation of relative failure probabilities is sufficiently robust to support categorization of pipe segments by the expert panel when this information is used in conjunction with considerations of defense-in-depth and safety margins to support the RI-ISI change request.

The staff also finds it acceptable that the SRRA code assumes that unstable fractures (ruptures) of piping are governed by the limit load criterion because it meets the limit load criterion used in the ASME Code, Section XI, Appendix H, for unstable fractures. The Log-Normal distributions of flaw aspect ratios are based on the same assumptions used in the pc-PRAISE code, an NRC sponsored code.

The Monte-Carlo method as implemented into the SRRA code is a standard approach which is commonly used in probabilistic structural mechanics codes including the pc-PRAISE code. Importance sampling, again a common and well-accepted approach, increases the

computational efficiency of the Monte-Carlo procedure by shifting the distributions for random variables to increase the number of simulated failures. The magnitude of shift applied to the variables by the SRRA code is relatively modest and is not believed to be sufficient to cause incorrect estimates of failure probabilities. The staff finds the numerical method acceptable because it represents standard probabilistic fracture mechanics techniques, is based on sound, generally accepted principles of solid mechanics, and is consistent with guidance provided in RG 1.178 and SRP Chapter 3.9.8.

WCAP-14572 states that the median values for stresses were set equal to one-half the stress values calculated by ASME Code stress analysis. In the public meeting on September 22, 1998 [item 2, Ref. 8], Westinghouse stated that in most piping stress analyses, dead weight, thermal, and pressure stresses are calculated on the basis of conservative assumptions such as concentrated dead loads, rigid support stiffnesses, conservative design conditions and stress concentration factors. Westinghouse also stated that the next revision of WCAP-14572 will clarify that if piping stress analysis is performed on the basis of realistic rather than conservative assumptions, higher median values and lower uncertainty can be justified and used in the detailed input options. Conditioned upon this change being incorporated into the next revision of WCAP-14572, the staff concludes that the approach for estimating the median values for stresses is acceptable because it is based on assumptions of conservative stresses in common pipe stress analyses and also accounts for situations when realistic, rather than conservative, values of dead load and thermal stresses are used.

In the public meeting on September 22, 1998 [item 3, Ref. 8], Westinghouse stated that the welding residual stresses used in the SRRA code are consistent with the pc-PRAISE code. Because of conservatism in applying these stresses in the SRRA code, the residual stresses are truncated at a maximum value of 90% of the material flow stress. Westinghouse also stated that the next revision of WCAP-14572 will provide basis for estimating the residual stresses to be used in the SRRA code. The staff finds the estimation of residual stresses to be acceptable because the conservatism that the residual stress is assumed to be constant through the weld wall and around the circumference, and no relaxation of residual stress is assumed for an initial fabrication flaw justifies the assumption that the yield strength of the weld is assumed to be 90% of the flow stress in the SRRA code for RI-ISI. The staff's approval is conditioned upon Westinghouse making the change to WCAP-14572 as described above.

In the public meeting on September 22, 1998 [item 4, Ref. 8], Westinghouse stated that industry experience has shown that axial cracks which could initiate from longitudinal welds are not a serious concern and have a low probability of occurrence because of the normal pressure and temperature ranges associated with nuclear operating plants. ASME Code Case N-524 was written to eliminate the requirement to examine longitudinal welds beyond the region of intersection with circumferential welds. The staff concludes that this approach is acceptable to address the axial cracks that could initiate from longitudinal welds, conditioned on Westinghouse revising WCAP-14572 [item 4, Ref. 8] to state that in the rare situation that a longitudinal weld or nonstandard geometry would need to be evaluated, the failure probability should be estimated by other means, such as expert opinion or advanced modeling.

The PRODIGAL program is used to calculate the number of flaws per weld length near the inner surface of the pipe. The staff concludes that this treatment of near-surface flaws is adequate and acceptable because all near-surface flaws are assumed to be inner surface breaking flaws,

the stress intensity factor for the near-surface flaws are conservatively calculated in the SRRA fracture mechanics models, and the flaw density used for the failure probability calculation is not reduced to eliminate the effect of flaws that are not actually surface flaws. The staff's approval is conditioned upon Westinghouse making the change to WCAP-14572 described above as stated by Westinghouse in the public meeting on September 22, 1998 [item 4, Ref. 8].

The CLVSQ program uses a simplified correlation to calculate leak rates. The staff finds the leak rate model to be acceptable since the accuracy of the correlation for fatigue type cracks is estimated to be within 25% and was judged to be acceptable by the ASME Research Task Force. PNNL's studies with pc-PRAISE also showed that the large leak and break probabilities were relatively insensitive to the actual value of the detectable leak rate in the range of 0.3 to 300 gpm [item 5 (c), Ref. 8].

The staff had identified an open item that WCAP-14572, Revision 1, does not identify the value that is used for the high-cycle fatigue stress for the 1-inch pipe size. Westinghouse clarified in the public meeting on September 22, 1998 [item 6, Ref. 8], that the vibration input for 1-inch pipe size is an input parameter determined by the SRRA user and an insert will be added in WCAP-14572 to provide guidelines for the SRRA user. A correction factor is applied to this stress to obtain the fatigue stress for other pipe sizes. The staff finds this approach to be acceptable since it specifies that the simplified input parameter is the peak-to-peak vibratory stress range in ksi corresponding to a one-inch pipe size. The staff's approval is conditioned upon Westinghouse making the change to WCAP-14572 described above.

Figure 4-2 of WCAP-14572, Revision 1, Supplement 1, graphically compares SRRA model predictions with industry plant data relative to the probability of violating minimum wall thickness criteria because of flow-accelerated corrosion wastage. The staff had expressed a concern (Ref. 9) that the graph indicates that the SRRA model tends to over-predict the failure probability early in plant life and to under predict later in life. In the public meeting on September 22, 1998 [item 7 (a), Ref. 8], Westinghouse explained that the minor over-prediction early in life is attributable to lower plant startup capacity factors (fraction of time at full power and flow), while the minor under-prediction later in life is attributable to higher capacity factors during this more mature period of plant operation. The staff finds this response acceptable since the industry observed failure rates due to wastage are within a factor of 2 to 3 of the SRRA calculated values even though the calculation was based upon data averaged values of pipe size and wall thickness.

Supplement 1 to WCAP-14572 provides information on assumptions made in the SRRA wall thinning model. In the public meeting on September 22, 1998 [item 7 (b), Ref. 8], Westinghouse stated that the next revision of WCAP-14572 will provide guidance for material wastage potential consistent with Ref. 11. The staff concludes that the guidance for estimating the material wastage potential is acceptable since, if material wastage rates are high enough to proceed through the pipe wall, the probabilities of small leak, large leak and break are all calculated to be the same. The staff's approval is conditioned upon Westinghouse making the change to WCAP-14572 described above. In addition, the acceptance is limited to this application, i.e., development of a risk-informed ISI program. As noted elsewhere, the licensees' augmented programs for erosion-corrosion will not be changed as a result of this alternative, and the staff is not endorsing the SRRA code for application in such augmented programs.

The staff had identified an open item that WCAP should provide guidance for the analyst on the SRRA code limitations for complex geometries and guidance for effective use of the code in such applications. In the public meeting on September 22, 1998 [item 12, Ref. 8], Westinghouse stated that the SRRA piping models only apply to standard piping geometry (circular cylinders with uniform wall thickness). Westinghouse further stated that a limitation on the use of nonstandard geometry will be added in the next revision of WCAP-14572. The staff finds this clarification of the code limitation to be acceptable. The staff's approval is conditioned upon Westinghouse making the change to WCAP-14572 described above.

The staff had also indicated that WCAP should specify the level of training and qualification that the code user needs to properly execute the SRRA code. In the public meeting on September 22, 1998 [item 13, Ref. 8], Westinghouse indicated that the next revision of WCAP-14572 will state that to ensure that the simplified SRRA input parameters are consistently assigned and the SRRA computer code is properly executed, the engineering team for SRRA input should be trained and qualified. The revised WCAP will also list the topics covered in this training as described in the September 22, 1998, public meeting [item 13, Ref. 8]. The staff finds the level of training and qualification that the code user needs to properly execute the SRRA code to be acceptable since it includes training on overall risk-informed ISI process , and how SRRA calculated probabilities are used in the piping segment risk calculation. The staff's approval is conditioned upon Westinghouse making the change to WCAP-14572 described above.

It was the staff's understanding that the existing correlation for leak rates are limited to pressurized-water reactors (PWR) reactor coolant system (RCS) conditions. The staff had indicated (Ref. 9) that Westinghouse should clarify whether the SRRA code can be applied to boiling-water reactors (BWR) and justify the applicability of the correlations used to calculate leak rates under BWR operating conditions. In the public meeting on September 22, 1998, Westinghouse stated that the existing correlations for leak rates can be used for other plant conditions beyond the RCS and that the SRRA code can be applied to BWRs; however, care must be exercised in applying this approach to BWR piping systems, particularly those subjected to intergrannular stress corrosion cracking (IGSCC). In addition, Westinghouse indicated that WCAP-14572 will be revised [item 5(d), Ref. 8] to provide guidance on addressing stress corrosion cracking. The staff finds the response acceptable since most piping susceptible to stress corrosion cracking (SCC) is also subject to fatigue loading, such as normal heat up and cool down, and the leak rate correlation for fatigue type cracks was conservatively assumed for the CLVSQ Program. The staff's approval is conditioned upon Westinghouse making the change to WCAP-14572 described above.

The staff had identified an open item that WCAP should describe how proof testing is addressed in the SRRA calculations. In the public meeting on September 22, 1998 [item 14, Ref. 8], Westinghouse stated that the effect of proof testing on the segment risk ranking and categorization would be very small and slightly conservative. Westinghouse also indicated that the next revision of WCAP-14572 will clarify that SRRA models in LEAKPROF do not take credit for eliminating large flaws, which would fail during the pre-service hydrostatic proof test, even though this is allowed as an input option in pc-PRAISE. The staff concludes that the approach for addressing proof testing is acceptable because Westinghouse has demonstrated that the effect of proof testing on the segment risk ranking and categorization would be very small and slightly conservative. The staff's approval is conditioned upon Westinghouse making the change to WCAP-14572 described above.

Before issuing this SER, the staff had identified an open item that the probability of detection curves used in calculations need to be justified for the material type, inspection method, component geometry, and degradation mechanism that apply to the structural location being addressed. In the public meeting on September 22, 1998 [item 15 (a), Ref. 8], Westinghouse stated that the default input values for the probability of detection (POD) curves are consistent with the default input values for pc-PRAISE. The revised WCAP will emphasize that the SRRA code user must ensure that the specified input values for POD are appropriate for the type of material, inspection method, component geometry, and degradation mechanism being evaluated. The staff finds this response acceptable since POD curves are consistent with the default input values for pc-PRAISE code which has been validated and accepted by the staff for various applications. The staff's approval is conditioned upon Westinghouse making the change to WCAP-14572 described above.

Before issuing this SER, the staff had identified an open item that Westinghouse should expand the code documentation to provide additional guidance for selecting the input for the calculation. In the public meeting on September 22, 1998 [item 15 (b), Ref. 8], Westinghouse stated that the next Revision of WCAP-14572, Supplement 1, will provide detailed guidelines for simplified input variables and any associated assumptions that could be important in assigning the input values for the SRRA code. WCAP-14572 will also state that if more than one degradation mechanism is present in a given segment, the limiting input values for each mechanism should be combined so that a limiting failure probability is calculated for risk ranking. The staff finds the guidance in item 15 (b), Ref. 8 to be acceptable because it provides sufficient guidance for the code user for selecting input parameters. The staff's approval is conditioned upon Westinghouse making the change to WCAP-14572 described above.

3.2.4 Consequence of Failure

The consequences of the postulated pipe segment failures include both direct and indirect effects of each segment failure. The direct effects include failures that cause initiating events or disable system trains or entire systems as a result of the loss of flow paths or loss of inventory, and the possible creation of diversion flow paths. Indirect effects include spatial effects, such as flooding, water spray, pipe whip, and jet impingement. WCAP-14572 methodology relies on the use of PRA models and results to gain insights into the potential direct and indirect consequences of pipe failures. Plant walkdowns are also an integral part of the methodology. The staff finds the general guidance provided in WCAP-14572 to determine the direct and indirect consequence of segment failure to be acceptable because it is comprehensive and systematic, and should produce a traceable analysis. WCAP-14572 does not include a detailed discussion of the specific assumptions to be used to guide the assessment of the direct and indirect effects of segment failures. For example, although diversion of flow is included as a direct effect, there is no guidance for determining whether a flow would be sufficiently large to fail a system function. Similarly, WCAP-14572 does not provide clear guidance for calculating flooding effects with regard to the required modeling of flood propagation pathways, modeling of flood growth and mitigation, and assumptions for the failure of critical equipment within a flood zone (e.g., if electro-mechanical components must be submerged before failure, etc.). The staff finds that specific assumptions regarding the direct and indirect effects of pipe segment failure should be developed by the individual licensees and should form part of the onsite documentation. A revision to WCAP-14572 (see item 8 (e) in Ref. 8) will require that details from

the consequence evaluation be maintained onsite for potential NRC audit.

WCAP-14572 methodology recommends considering a spectrum of different size breaks (i.e., failure modes) in every segment. The failure modes considered are the small leak, the disabling leak, and a full break, as discussed in Section 3 of Supplement 1. Failure probability for each of these modes typically decreases as the size of the break increases. WCAP-14572 also defines the direct and indirect effects to be evaluated for each postulated failure mode. The staff finds that the association between failure mode and effects is reasonable when compared to previous results and findings from PRAs of internal flooding events.

In section 3.4.2 of WCAP-14572 it is stated that the indirect effects of a pipe whip need not include the rupture of other piping of equal or greater size, but it should be assumed that a through-wall crack will develop in a line that is impacted by a whipping pipe of the same size. In Ref. 8, Westinghouse stated that the bases for these assumptions are found in Ref. 13 and Ref. 14. These references also provide justification for WCAP-14572 guidance on the location of circumferential and longitudinal breaks in high energy piping runs. In accordance with item 10 of Ref. 8, Ref. 13 and Ref. 14 will be added to the WCAP-14572, and cited appropriately in the text. The staff finds that the bases found in Ref. 13 and Ref. 14 to be acceptable because they represent established and commonly accepted industry practices. The staff's approval is conditioned upon Westinghouse making the change to WCAP-14572 described above.

3.3 Probabilistic Risk Assessment

The requirements of a PRA and the general methodology for using PRA in regulatory applications is discussed in the guidelines in RG 1.174. RG 1.178 provides guidance that is more specific to ISI. It is expected that licensees who wish to apply the WCAP-14572 methodology to an RI-ISI program will also conform to the RGs 1.174 and 1.178 guidelines for PRA quality, scope, and level of detail.

In July 1997, at staff briefing of the CRGR on draft RG 1.178, CRGR suggested that a peer review be performed of the use of PRA methods to support RI-ISI. The methodology proposed in RG 1.178 is similar to that found in WCAP-14572. The peer review, performed by Brookhaven National Laboratory (BNL), and documented in a letter report (Ref. 12), concluded that the PRA approach is technically sound and within the state-of-the-art, and that the approach can facilitate risk-informed regulatory decisionmaking in the area of ISI.

WCAP-14572 does not prescribe the incorporation of pipe segment failure events into the PRA model. Instead, the core damage frequency (CDF)/large early relief frequency (LERF) for each segment is determined by the use of surrogate events (i.e., initiating events, basic events, or groups of events) already modeled in the PRA with failures that are representative of the effects of the piping segment failure. By setting the appropriate surrogate events to a failed state in the PRA and by re-quantifying the PRA, the impact of the pipe segment failure can be estimated. The staff finds this process acceptable as long as the truncation limits used in the baseline calculations are maintained and the model is re-quantified. If a pre-solved cutset/scenario model is used instead of re-quantifying the baseline model, the application should include justification as to why the truncated model still produces reasonable results given that the equipment is assumed to be failed.

The segment failure probability/rate is combined with the results of the risk calculation as described in Equations 3-1 to 3-10 of WCAP-14572, Revision 1. The results are subsequently combined into a total piping segment CDF (or LERF). The staff recognizes that the WCAP equations are approximations for segment failures which do not trip the plant and that are discovered before an unrelated plant trip. Following the discovery of such a rupture, the likely operator action would be to isolate the break and to decide whether to shutdown or to continue plant operation. In some cases, the break may disable equipment required by the technical specifications and plant operation will be governed by allowed outage time (AOT). If the decision is made not to shut down the plant, the licensee would presumably realign the affected systems to facilitate repairs. If the decision is made to shut down the plant, the licensees may realign the systems to provide more robust mitigating function capabilities during the shutdown process, or may simply begin a controlled plant shutdown. In all cases except the long AOT scenario, the degraded condition would only be present during a relatively short time span. Furthermore, a pipe segment rupture is an unusual event and the operations staff would be very aware of the degraded functions and would be prepared to actively intervene if necessary. The staff finds the assumption that short AOT and controlled shutdown risk are minor contributors compared to risks associated with segment failure following an unrelated transients acceptable because of the short exposure time and the heightened awareness by the plant staff.

Short exposure time and heightened plant staff awareness may not, however, be a reasonable assumption if there is a long AOT. In response to staff comments, Westinghouse indicated that in a future revision to WCAP-14572 [item 18, Ref. 8], Equation 3-8 will be modified such that, for systems in which outage times are approximately the same order of magnitude as the test interval (T_1), e.g., approximately $\frac{1}{4}T_1$, the contribution attributed to maintenance unavailability (expressed as FR_{PB} * AOT) will be added to the total component unavailability.

The staff notes that the description associated with equation 3-5 on page 97 of the WCAP is not an appropriate characterization of the "CCDF" variable in the equation. The equation estimates what the WCAP refers to as a "Conditional Core Damage Frequency" (CCDF) to characterize the risk due to pipe failures that do not cause an initiating event but only fail mitigating systems. The staff believes that the desired quantity is not the conditional core damage frequency given a pipe break as stated, but rather the increase in the core damage frequency when the pipe break probability is changed from zero to unity. This change is multiplied by the pipe break failure probability to obtain the core damage frequency due to the pipe break. With this change in definition (e.g., CCDF as Change in Core Damage Frequency) of the result being calculated by the equation, the equation is correct and acceptable.

The staff notes that Equation 3-8 on page 99 is used to characterize several slightly different failure modes of piping segments. For failure modes where the pipe is continuously degrading and eventually reaches the point that transient or additional stresses associated with a demand following an initiating event would cause the pipe to fail, the equation corresponds to the normal standby failure estimate (e.g., the pipe integrity has failed but the failure only becomes apparent on demand). If the segment does not continuously degrade, but the strength is degraded slightly on each test demand, the equation is also a valid approximation. If the pipe does not degrade, but there are variations in the demand stress, the equation underestimates the failure probability by a factor of two. The staff finds the approximation acceptable since it is valid for the most likely failure modes, and produces a reasonable approximation for the other failure mode.

The staff finds that the methodology will yield results of commensurate precision with the segment failure probabilities and which, after review by the expert panel, can be used to support safety significance determination.

3.3.1 Evaluating Failures with PRA

The staff finds that the discussion in Section 3.6.1 of WCAP-14572, Revision 1, concerning the evaluation of CDF/LERF using surrogate components needs clarification with regard to the incorporation of indirect consequences associated with pipe segment failures. Since WCAP-14572, Revision 1, does not explicitly state that all components subject to a harsh environment, jet impingement, pipe whip, etc., initiated by a pipe segment failure should be failed in the PRA model evaluation, individual applications utilizing WCAP-14572 methodology must assume failure of this equipment in the risk evaluation, or provide justification as to why failure is not assumed in order to be considered an acceptable implementation of WCAP-14572 (e.g., the component is environmentally qualified to the conditions expected from the pipe failure event).

For some initiating events and plant operating modes, the scope of the available plant-specific PRA models may not be sufficient to estimate the impact of a pipe segment failure. For example, some PRAs may not model fires, seismic or other external events, and the shutdown mode of operation to the level of detail required to estimate relative risk importance or risk impact. For these cases, the impact of failure of each pipe segment on risk must then be developed and incorporated in the decision-making process by an expert panel. WCAP-14572 provides sample expert panel worksheets that include a listing and discussion of the safety-significant functions a system must perform. The expert panel is expected to consider the importance of these functions for scenarios not modeled in the PRA so that the categorization of safety significance of the pipe segments reflects all plausible accident scenarios. Since the text in WCAP-14572 does not discuss system functions and their use by the expert panel, individual RI-ISI applications must address this issue in order to be considered an acceptable implementation of WCAP-14572.

3.3.2 Use of PRA for Categorizing Piping Segments

Based on quantitative PRA results which assume no credit for ISI, risk reduction worth (RRW) and risk achievement worth (RAW) measures are developed for each pipe segment as described in Equations 3-11 and 3-12 of WCAP-14572. The RRW calculates the current contribution of the segment failure to risk and the RAW calculates the potential change in risk associated with the failure of the pipe segment. Use of these measures provides useful insights to the integrated decision-making process. The staff finds that the use of quantitative models which assume no credit for ISI is appropriate for the determination of the safety significance of pipe segments because one of the goals of the RI-ISI program is to target the inspection of those elements where inspection will be most efficient. If a pipe segment has one or more welds inspected under an augmented inspection program, WCAP-14572 methodology specifies that the representative weld failure probability is calculated assuming credit for ISI. The use of quantitative models which credit ISI for segments inspected under the augmented program is

appropriate since the augmented program inspection is maintained in the RI-ISI process.

WCAP-14572 recommends that pipe segments with RRW greater than 1.005 should be categorized as HSS while the segments with RRW values between 1.001 and 1.004 should be identified for additional consideration by the expert panel. The staff recognizes the utility of the suggested RRW guidelines and finds that these suggested values may be used for initial screening. WCAP-14572 does not provide guidelines for the RAW values for classification of safety significance. Instead, WCAP-14572 suggests that these values should be generated and supplied to the expert panel for consideration. The staff finds that the RAW values, or some other measure of the consequence of segment failure, provides a valuable input to the decision making process. The expert panel should be aware of the implications of high RAW values (or other consequence measure) so that their decisions are made with a full understanding of the severity of the consequences of each segment's rupture. The appropriateness of the RRW guidelines and use of the RAW values should be documented as part of the licensee's categorization process and should be assessed on a plant-specific basis within the framework of the proposed ISI program and based, in part, on the risk impact from the application.

An integral part of the categorization process is the expert panel which makes a final determination of the safety significance of each pipe segment. The expert panel considers pipe segment characteristics (e.g., Table 3.6-9 of WCAP-14572, Revision 1), the system characteristics (e.g., Table 3.6-12 of WCAP-14572, Revision 1), the risk-related information in the form of relative pipe segment importances and consequences of pipe failure, and information not available from the risk analyses such as the importance of the pipe for mitigating unquantified events (shutdown, external events, etc.). In addition, guidance to be added to Section 3.6.3 of WCAP-14572 [item 8(c), Ref. 8] will ensure consistent application of the expert panel process. Section 3.4 of this SER provides a detailed discussion of the qualification and role of the expert panel. The staff finds that in the categorization of pipe segments, the use of an expert panel (as documented in Section 3.6.3 of WCAP-14572) to combine PRA and engineering information (as described in example Tables 3.6-9 and 3.6-12) is acceptable and necessary. The staff finds the process acceptable since it meets the intent of the integrated decision-making process guidelines discussed in RGs 1.174 and 1.178, in that engineering and risk insights (both qualitative and quantitative) are taken into consideration in identifying safety significant piping segments. The staff notes that the expert panel's records must be retained on site and available for NRC staff audits. The staff's approval is conditioned upon Westinghouse making the change to WCAP-14572 described above.

3.3.2.1 Sensitivity to Modeled Human Actions

Operator actions to isolate a break and mitigate its immediate consequences are credited in the RI-ISI analysis. For example, operator action to close an MOV to stop the loss of water from a break can be credited, if this action is shown to be feasible. WCAP-14572 methodology recommends that two sets of calculations be performed, one assuming all such actions are successful and another assuming that all such actions fail. The RRW and RAW measures are calculated for these different assumptions and if the RRW is greater than 1.005 for the CDF or LERF calculations with or without operator action the segment is classified HSS. If any RRW is between 1.005 and 1.001, safety significance considerations are reviewed and the safety significance determined during the expert panel deliberations. The staff finds it acceptable to

use sensitivity studies to bound the possible impact of operator actions since these sensitivity calculations may point to areas where credit for recovery actions plays a major role in the classification of pipe segments (and where licensee commitment to these actions is important, or dependence on these recovery actions can be lessened).

In addition to operator recovery actions, the modeling of human actions can affect the RI-ISI process in another way. Specifically, choosing a surrogate PRA component to represent the system effects of a pipe failure in a segment must include consideration of how the surrogate component is modeled in the PRA, including the modeling of recovery actions for the component. To emphasize this consideration when choosing surrogate components, the following will be added to a future revision of WCAP-14572 [item 8 (d) of Ref. 8]:

> "When choosing a surrogate component, care must be taken to account for the ways in which the component has been modeled in the PRA, including recovery actions which may have been modeled to restore the operability of the component. If the recovery action was determined to be inappropriate for the postulated consequence given a piping failure, the recovery action basic event should also be failed with a probability of 1.0."

The staff finds the above addition to be acceptable since operator recovery actions that are no longer feasible as a result of a flood, will no longer be credited. The staff's approval is conditioned upon Westinghouse making the change to WCAP-14572 described above.

3.3.2.2 Sensitivity to Segment Failure Probability

WCAP-14572 includes an evaluation in which the impact of the variation in the segment failure probabilities on the safety significance determination is investigated. The analysis was based on assigning a range factor to the pipe failure probabilities. The staff finds that this study is useful and should be performed on a plant-specific basis for RI-ISI applications so that the impact of the variation of the pipe failure probabilities on the safety significance classification process can be evaluated.

As part of the staff's review of the WCAP methodology, independent audit analyses were performed by PNNL to estimate the uncertainties in the calculated failure probability for a piping segment. Highlights of the uncertainty studies are documented in NUREG-1661 (Ref. 15). The results from the uncertainty studies are illustrated in Figure-1 and summarized below:

1. The upper bound curve was based on the largest of the 100 failure probabilities calculated from the 100 pc-PRAISE runs for each given cyclic stress level.

2. The largest uncertainties are for those cases that have very low values of calculated failure probabilities. The uncertainties decrease with increasing failure probabilities.

3. The categorization of piping segments as high- and low-safety-significant is a function of the degradation mechanism and consequences. "Inactive" versus "active" degradation mechanisms result in significant variation in failure probabilities. This variation renders the impact of the large uncertainties for components with low failure probabilities as having a relatively small impact on the categorization. The effects of uncertainties on component categorization can be accounted for through numerical evaluations, such as Monte Carlo

analyses.

4. The calculations for components with very low failure probabilities are particularly sensitive to the tails of the distributions assumed for input parameters such as flaw depths and crack growth rates. The large uncertainties in the calculated failure probabilities are a direct results of the fact that the tails of these input distributions are based on extrapolations from actual data.

5. Failure rates for components with high calculated failure probabilities can be assessed for consistency with plant operating experience and with industry data bases on reported field failures. The ability to make such comparisons helps to minimize the uncertainties in the calculated probabilities.

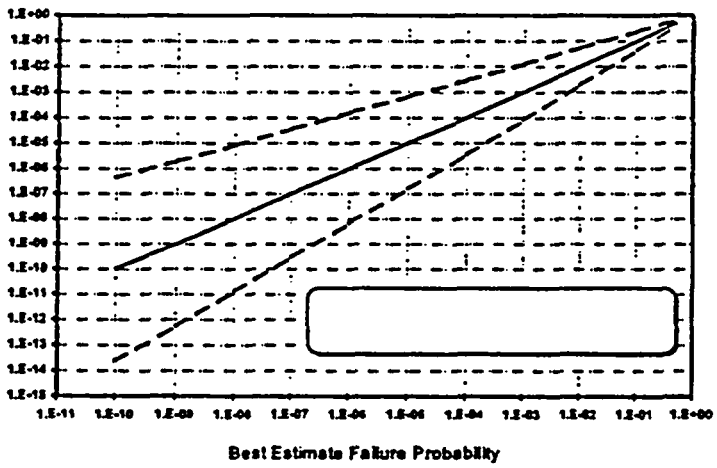

Figure - 1 Uncertainty Bounds Related to Values of Calculated Failure Probabilities

To ensure that the potential impact of uncertainties is adequately addressed in the categorization of piping segments, Westinghouse committed to add the following as part of a future revision to WCAP-14572 [item 19, Ref. 8]:

> "In addition to the sensitivity studies described above, a simplified uncertainty analysis is performed to ensure that no low safety significant segments could move into the high safety significance category when reasonable variations in the pipe failure and conditional CDF/LERF probabilities are considered. The results of the evaluation along with other insights are provided to the plant expert panel."

The staff finds that the sensitivity studies as proposed by WCAP-14572 (and as amended by the above addition) would address model uncertainty in terms of pipe failure probabilities, and would ensure that pipe segment categorization is robust. The staff's approval is conditioned upon Westinghouse making the change to WCAP-14572 described above.

3.3.3 Change in Risk Resulting from Change in ISI Programs

To estimate the change in risk from the implementation of the RI-IST program, WCAP-14572 methodology utilizes the SRRA code to provide a quantitative estimate of the relative susceptibility of pipe segments to failure as determined by the weld material and environmental conditions within the segment. Different weld failure probabilities are calculated depending on whether the weld is inspected or not. The methodology credits the reduction in weld failure probability attributable to ISI at the segment level. If one or more welds within a segment are inspected under the current Section XI program or the RI-ISI program, the selected weld failure probability including credit for ISI is assigned to the segment. That is, the segment failure probability will not change as a result of any changes in the inspection strategy applied to the welds within a segment. If one or more welds were inspected under the Section XI program, but no welds will be inspected under an RI-ISI program, the segment failure probability will increase. If no welds were inspected under the Section XI program, but one or more welds will be inspected under the RI-ISI program, the segment failure probability will decrease. If one or more welds within a segment are inspected in the augmented program, the selected weld failure probability including credit for the augmented program is assigned to the segment. For a selected pipe segment where at least two separate inspections are being performed (one for the primary failure mechanism which is addressed by an augmented program, and other inspection(s) performed under the Section XI program or the RI-ISI program, so that the secondary mechanism is addressed), a factor of three improvement in the failure probability is credited.

The staff finds the above process acceptable, but recognizes that this process underestimates risk reductions arising from changing inspection locations from a weld subject to no degradation mechanism to another with an identified degradation mechanism. It also underestimates risk increases arising from the reduction in the number of welds inspected within each segment. The staff expects that the targeting of inspections to degradation mechanisms should yield relatively large risk reductions, while the reduction in the number of inspections within a segment will yield a larger number of smaller risk increases. However, as discussed in Section 3.2.3 of this SER, the increase in risk resulting from a reduction in the number of inspections should be minimal since WCAP-14572 methodology will characterize the failure probability of a segment by combining the failure probabilities of the dominant degradation mechanisms in that section.

In determining whether the change in CDF and LERF associated with WCAP-14572 methodology is acceptable, the following factors were also considered; the statistical evaluation used to develop an initial estimate of the number of welds to inspect, and the four criteria for evaluation of results found in Section 4.4.2 of WCAP-14572. These are further discussed below.

To ensure that a target leak rate is met with a stated level of confidence, the statistical evaluation methodology proposed in WCAP-14572 uses the probability of a flaw, the conditional

probability of a leak, and a target leak rate to determine the minimum number of welds to inspect. In discussions with the staff, Westinghouse stated that, in controlling the frequency of pipe leaks, the pipe break frequency (which drives the safety significance classification) is also controlled. This is supported by the pilot WCAP RI-ISI application, which reported that the conditional probability of a pipe break is sufficiently small when compared to the conditional leak probability, and that the level of confidence that the target leak frequency is not exceeded is also the confidence that the pipe break frequency is not exceeded. WCAP-14572 methodology thus provides a systematic evaluation of the required number of inspections that is acceptable for the RI-ISI program, and confidence that the failure likelihood of high safety significant piping segments will not increase above those values used to support the finding.

WCAP-14572 provides guidelines for evaluating the change in plant and system-level risk resulting from changes to the ISI program. The first guideline suggests the addition of examinations until at least a risk neutral change is estimated. The second guideline suggests that the risk-dominant pipe segments within systems which dominate the estimated risk (e.g., greater than 10% of the total) should be reevaluated to identify where additional examinations may be needed so that the overall risk for these systems could be reduced. The third guideline suggests that, for systems where risk increases are identified, additional examinations may be necessary to minimize the risk increase (to less than two orders of magnitude below the RI-ISI CDF/LERF for that system and less than a 10^{-8} CDF increase or a 10^{-9} LERF increase). The staff finds that these WCAP guideline are consistent with the guidance in RGs 1.174 and 1.178 which state that risk increases (if any) resulting from a proposed change should be small and consistent with the intent of the Commission's Safety Goal Policy Statement.

In summary, the staff finds that, although the calculation of the change in risk (CDF/LERF) will not precisely estimate the magnitude of the change, the calculation can illustrate whether the resulting change will be a risk increase or a risk decrease. Using sensitivity studies, the quantitative results can be shown to be robust in terms of credit for operator actions and pipe segment failure probability. By utilizing plant and system-level criteria as discussed above, the risk from individual system failures will be kept small and dominant risk contributors will not be created. When applied as part of an integrated decision-making process, the staff finds that the analyses, results, and decision criteria associated with the determination of segment safety significance and subsequent change in risk estimates provide reasonable assurance that the change in the ISI program would result in a total plant risk neutrality, risk decrease, or a small risk increase that will be consistent with staff guidelines found in RG 1.174. For full scope RI-ISI programs, such as the one performed for Surry Unit 1, the staff anticipates the program to be risk neutral or result in a risk reduction.

3.4 Integrated Decisionmaking

RG 1.178 and SRP Chapter 3.9.8 guidelines describe an integrated approach that should be utilized to determine the acceptability of the proposed RI-ISI program by considering in concert the traditional engineering analysis, risk evaluation, and the implementation and performance monitoring of piping under the program.

In the WCAP-14572 approach to integrated decisionmaking, conventional fracture mechanics analysis methods are combined with Monte-Carlo probabilistic simulations to determine failure

probabilities for the pipe segments, as discussed in Supplement 1 to WCAP-14572, Revision 1. These failure probabilities are used together with the results of consequence evaluations to characterize the conditional risk associated with the failure of each segment, as discussed in Section 3.6 of WCAP-14572. Specifically, section 3.6 explains how this information is integrated with deterministic considerations and an expert panel evaluation to categorize pipe segments as either LSS or HSS. Section 3.7 of WCAP-14572, Revision 1, explains how the results of this risk-ranking process are used in selecting structural elements for examination.

An integral part of the RI-ISI process is the expert panel which makes a final determination of the safety significance of each pipe segment. The expert panel is responsible for the review and approval of all risk-informed selection results by utilizing their expertise and past experience in inspection results, industry piping failure data, relevant stress analysis results, PRA insights, and knowledge of ISI and nondestructive examination techniques. The RI-ISI expert panel should include expertise in the following areas:

- PRA
- Plant Operations
- Plant Maintenance
- Plant Engineering
- ISI
- Nondestructive Examination
- Stress and Materials Engineering

Section 3.6.3 of WCAP-14572, Revision 1, provides details of the WOG expert panel process. Item 8(c) of Ref. 8 provides further details on the role of the expert panel to evaluate the risk-informed results and make a final decision by identifying HSS segments for ISI. Item 8(c) of Ref. 8 also states that segments that have been determined to be HSS should not be classified lower by the expert panel without sufficient justification that is documented as part of the program and that the expert panel should be focussed primarily on adding piping segments to the higher classification.

The expert panel evaluations are an established part of the Maintenance Rule implementation and their use in risk-informed applications is well established. The staff finds that in the categorization of pipe segments, the use of an expert panel (as documented in Section 3.6.3 of WCAP-14572) to combine PRA and engineering information (as described in example Tables 3.6-9 and 3.6-12) is acceptable and necessary. In addition, guidance to be added to Section 3.6.3 of WCAP-14572 [item 8(c), Ref. 8] will ensure consistent application of the expert panel process. The staff finds the process acceptable since it meets the integrated decision-making process guidelines discussed in RG 1.174 and SRP Chapter 1.178, in that engineering and risk insights (both qualitative and quantitative) are taken into consideration in identification of safety significant piping segments. The staff's approval is conditioned upon Westinghouse making the change to WCAP-14572 described above.

3.4.1 Selection of Examination Locations

At its July 1997 briefing, CRGR requested that the staff should have a peer review performed to assess the use of Perdue-Abramson statistical model to determine the number of elements to be inspected within a piping segment. The contractor performing the peer review in this area (Los Alamos National Laboratory(LANL)) concluded (Ref. 16) that the Perdue-Abramson method is a statistically sound method for use in determining the number of welds to be inspected in an RI-ISI program in order to ensure that a specified target leak frequency is not exceeded at the pre-specified confidence level of 95%. LANL further stated that although other sampling schemes could be used (such as classical and/or Bayesian double or sequential sampling schemes), the Perdue-Abramson model is capable of providing the desired confidence or assurance.

Section 3.6.1 of WCAP-14572 addresses evaluation of the classification of piping segments, using sensitivity studies to demonstrate whether changes in assumptions or data can affect these classifications. Piping systems at Millstone Unit 3 and Surry Unit 1 were considered in these studies. Operational insights are addressed in Section 3.6.2 of WCAP-14572, which indicates that information obtained from plant operation and maintenance experience is used to identify piping segments having a history of design or operating issues. Section 3.6.3 states that an expert panel reviews and approves the final classification of piping segments on the basis of their expertise and insights as discussed in Section 3.4. A discussion of the risk ranking process is provided in Sections 3.6.4 and 3.6.5 of WCAP-14572.

Sections 3.7.1 and 3.7.2 of WCAP-14572 address the criteria used to determine the number of structural elements selected for examination, consistent with the safety significance and failure potential of the given pipe segment. The RI-ISI program includes examinations of HSS elements contained in Regions 1 and 2 of the element selection matrix (Figure 3.7-1 of WCAP-14572). By the WCAP-14572 selection process, 100% of the susceptible locations (Region 1A) are examined. Elements in Regions 1B and 2 are generally subject to a statistical evaluation process such as the Perdue Model.

The Perdue Model is intended to be used on highly reliable piping to establish a statistically relevant sample size and verify the condition of the piping. In cases where an active degradation mechanism exists, particularly where there is an ongoing augmented program, it is inappropriate to use the Perdue Model for element selection. In these cases, the expert panel must apply other rationales for selecting the number of elements to examine. At Surry, the licensee selected certain elements to address a secondary degradation mechanism and reduce the delta risk compared to current Section XI ISI. In other cases, elements were selected to address defense in depth considerations. As discussed in the public meeting on September 22, 1998 [page 274, Ref. 8], Westinghouse indicated that additional guidance would be added in Section 3.7 of WCAP-14572 to address sample size selection in cases where the Perdue Model could not be applied to state that "additional rationale must be developed when a statistical model cannot be applied to determine the minimum number of examination locations for a given segment."

The staff finds the methodology to determine the number of elements selected for examination to be acceptable since, all HSS segments with known degradation mechanisms will be subject to 100% examination, HSS segments with no known degradation mechanism will be sampled for examination on a sound statistical basis to ensure that a specified target leak frequency is not

exceeded at the pre-specified confidence level of 95%, LSS segments with known degradation mechanisms will be subject to examination in accordance with the licensees defined program, and the final scope of examination will result in a change in risk consistent with RG 1.174 guidelines. The staff's approval is conditioned upon Westinghouse making the change to WCAP-14572 described above [page 274, Ref. 8].

3.4.2 Examination Methods

Licensees who wish to apply the WCAP-14572 methodology to an RI-ISI program must conform to the guidelines in RG 1.178 for examination and pressure test requirements. Examination methods and personnel qualification must be in accordance with the ASME Section XI Code Edition and Addenda endorsed by the NRC through 10 CFR 50.55a. For inspections outside the scope of Section XI (e.g., EC, IGSCC) the acceptance criteria should meet existing regulatory guidance applicable to those programs.

The objective of ISI and ASME Section XI are to identify conditions (i.e., flaw indications) that are precursors to leaks and ruptures in the pressure boundary that may impact plant safety. Therefore, the RI-ISI program must meet this objective to be found acceptable for use. Further, since the risk-informed programs is predicated on inspection for cause, element selection should target specific degradation mechanisms.

WCAP-14572, Revision 1, specifies that inservice examinations and system pressure tests are to be performed in accordance with Section 4 of WCAP-14572 which should meet the requirements contained in Section XI of the ASME BPVC Code Edition and Addenda specified in the Owner's current ISI program except where specific references are provided that add supplemental requirements, specify other Code editions and addenda, or recommend/require the use of ASME Code Cases. The examination methods for HSS piping structural elements, specified in Table 4.1-1 of WCAP-14572 are taken directly from Code Case N-577, Table 1. As an alternative to Table 4.1-1, additional guidance for the selection of examination methods is provided in Table 4.1-2 of WCAP-14572, which contains suggested examination or monitoring methods consistent with the configuration of the structural element and the postulated failure mode. This guidance is subject to approval by the Authorized Nuclear Inservice Inspector (ANII) under the requirements of Paragraph IWA-2240 of ASME Section XI. Consistent with RG 1.178 guidelines, all ASME Class 1, 2, and 3 piping systems must continue to receive a visual examination for leakage in accordance with the applicable pressure test requirements of ASME Section XI as endorsed by 10 CFR 50.55a.

3.5 Implementation and Monitoring

The objective of this element of RGs 1.174 and 1.178 is to assess performance of the affected piping systems under the proposed RI-ISI program by implementing monitoring strategies that confirm the assumptions and analysis used in developing the RI-ISI program. To satisfy 10 CFR 50.55a(a)(3)(i), implementation of the RI-ISI program (including inspection scope, examination methods, and methods of evaluation of examination results) must provide an adequate level of quality and safety. The plant-specific application process is covered in Section 5 of WCAP-14572, which provides the framework for applying the risk-informed methods to a

specific plant for the ISI of piping.

Considering that the implementation of the proposed RI-ISI program will greatly reduce the number of examinations, limited examinations could have a significant impact on the detection of inservice degradation. In cases where examination methods are not practical or appropriate, RG 1.178 states that alternative inspection intervals, scope and methods should be developed to ensure that piping degradation is detected and structural integrity is maintained. To address this aspect, a stepped approach to limited examinations will be incorporated into WCAP-14572 that may include the examination of adjacent elements and more frequent pressure testing and visual examination for leakage. However, it should be noted that, in accordance with the regulations, limited examinations must be documented and submitted to the staff as relief requests for review and approval.

The qualification of NDE personnel, processes and equipment must comply with Section XI of the ASME Code to meet the requirements of 10 CFR 50.55a. In general, this means procedures must be qualified in accordance with ASME Section XI, Appendix VIII, or in the spirit of Appendix VIII, for techniques. As discussed in response G-19 in the NEI submittal dated March 13, 1997 (Ref. 17), Westinghouse stated that the reference plant "would qualify methods, procedures, personnel, and equipment to a level commensurate with the intent of an Appendix VIII performance demonstration."

Section 4 of WCAP-14572, "Inspection Program Requirements," notes that the use of a number of Code Cases is recommended (i.e., N-416-1, N-498-1, N-532). Staff acceptance of the WOG approach does not automatically imply acceptance of the referenced Code Cases. Licensees proposing to use the WOG approach must submit separate proposed alternatives to use these or other unapproved Code Cases.

Implementation of a RI-ISI program for piping should be initiated at the start of a plant's next ISI interval, consistent with the requirements of the ASME Code Section XI Edition and Addenda committed to by an Owner in accordance with 10 CFR 50.55a, or any delays granted by the NRC staff. In addition to other changes in Section 4.5 of WCAP-14572, Westinghouse stated in the public meeting on September 22, 1998 [item 20, Ref. 8], that the following sentence will be added in the next revision of WCAP-14572:

> "Documentation of program updates shall be kept and maintained by the Owner on site for audit. Changes arising from the program updates should be evaluated using the change mechanisms described in existing applicable regulations (e.g., 10 CFR 50.55a and Appendix B to 10 CFR Part 50) to determine if the change to the RI-ISI program should be reported to the NRC."

The staff finds the periodic reporting requirements to be acceptable since they meet the existing applicable regulations. The staff's approval is conditioned upon Westinghouse making the change to WCAP-14572 described above.

WCAP-14572, Revision 1 states that periodic updates of RI-ISI programs will be performed at least on a period basis to coincide with the inspection program requirements contained in ASME Section XI under Inspection Program B. The staff finds these updates acceptable because they meet ASME Section XI which requires updates following the completion of all scheduled

examinations in each inspection interval. WCAP-14572 also states that RI-ISI programs will be evaluated for changes in safety-significance and inspection requirements due to plant design feature changes, plant procedure changes, equipment performance changes, and examination results including flaws or indications of leaks. This process for RI-ISI program updates meets the guidelines of RG 1.174 that risk-informed applications must include performance monitoring and feedback provisions and hence is acceptable to the staff.

3.6 Conformance to Regulatory Guide 1.174

RG 1.174 describes an acceptable method for assessing the nature and impact of licensing basis changes by a licensee when the licensee chooses to support these changes with risk information. This Reg Guide identifies a four-element approach for evaluating such changes, and these four elements are aimed at addressing the five principles of risk-informed regulation. Section 1.4 of WCAP-14572 Revision 1 summarizes how the proposed WOG RI-ISI process conforms to the RG 1.174 approach. The staff finds that WCAP-14572 approach is consistent with RG 1.174 as discussed below.

In Element 1 of the RG 1.174 approach, the licensee is to define the proposed change. Section 1.1 of WCAP-14572 discusses current regulatory requirements for the ISI program and the changes in regulatory compliance using the RI-ISI approach. The scope of the changes is also discussed, and this scope includes the addition of non-ASME code piping that has been identified as high safety significant. The staff finds that the discussion in Section 1.1 of WCAP-14572 to be consistent with the guidance provided in Section 2.1 of RG 1.174.

Element 2 is the performance of the engineering analysis. In this element, the licensee is to consider the appropriateness of qualitative and quantitative analyses, as well as analyses using traditional engineering approaches and those techniques associated with the use of PRA findings. Regardless of the analysis method chosen, the licensee must show that the principles set forth in Section 2 of RG 1.174 have been met. The staff finds that the evaluation process as described in Section 3 of WCAP-14572 meets the requirements of this Element. WCAP Section 3 describes the probabilistic and deterministic engineering analyses to be performed and integrated through the use of a plant expert panel to define the high and low safety significant piping segments. The results of these analyses are used to select the inspection locations and inspection methods, and a statistical model is used to determine the number of locations to be inspected to meet confidence and reliability goals.

Element 3 is the definition of the implementation and monitoring program. The primary goal of this element is to ensure that no adverse safety degradation occurs because of changes to the ISI program, and the staff finds that the guidance provided in WCAP Section 4.5 is adequate to meet this goal. Section 4.5 of WCAP-14572 discusses how the implementation of the RI-ISI program is consistent with the requirements of ASME Code Section XI. In addition, the monitoring, feedback and corrective action program discussed is consistent with guidelines provided in Section 2.3 of RG 1.174.

Element 4 is the submittal of the proposed change. WCAP-14572 states that each licensee will submit their proposed change at the time they perform a RI-ISI program.

RG 1.174 states that, in implementing risk-informed decision-making, plant changes are expected to meet a set of key principles. The paragraphs below summarize these principles, and staff findings with regard to the conformance of WCAP-14572 methodology with these principles.

Principle 1 states that the proposed change must meet current regulations unless it is explicitly related to a requested exemption or rule change. The proposed RI-ISI change is an alternative to the ASME Section XI Code as referenced by 10 CFR 50.55a(a)(3) for piping ISI requirements with regard to the number of inspections, locations of inspections, and methods of inspections.

Principle 2 states that the proposed change must be consistent with the defense-in-depth philosophy. ISI is an integral part of defense-in-depth. It is expected that as part of the RI-ISI process, the safety significance categorization, the expert panel review and approval, and the subsequent number and location of elements to inspect will maintain the basic intent of ISI (i.e., identifying and repairing flaws before pipe integrity is challenged). Therefore, although a reduction in the number of welds inspected is anticipated, it is expected that there will be reasonable assurance that the program will provide a substantive ongoing assessment of piping condition.

Principle 3 states that the proposed change shall maintain sufficient safety margins. No changes to the evaluation of design basis accidents in the final safety analysis report (FSAR) are being made by the RI-ISI process. In addition, Section 3.7 of WCAP-14572 describes the use of a statistical model to assure that safety margins (in terms of pipe failure probability) are maintained. This statistical model is based on the evaluation of potential flaws and leakage rates that are precursors to piping failure.

Principle 4 states that, when proposed changes result in an increase in core damage frequency or risk, the increases should be small and consistent with the intent of the Commission's Safety Goal Policy Statement. Sections 1.4, 3.6, 3.7, and 4.4 of WCAP-14572 provide arguments that a RI-ISI program is, as a minimum, a risk-neutral application and should result in a risk reduction. Staff findings with regard to principle 4 are found in Section 3.3.3 of this SER.

Principle 5 states that the impact of the proposed change should be monitored using performance measurement strategies. WCAP-14572 conformance to this principle is already discussed in the paragraph on Element 3 above.

4.0 CONCLUSIONS

10 CFR 50.55a(a)(3) states that alternatives to the requirements of paragraph (g) may be used, when authorized by the NRC, if (i) the proposed alternatives would provide an acceptable level of quality and safety or (ii) compliance with the specified requirements would result in hardship or unusual difficulty without a compensating increase in the level of quality and safety. The staff concludes that the proposed RI-ISI program as described in WCAP-14572, Revision 1, conditioned upon the changes to be incorporated as discussed in Ref. 8, will provide an acceptable level of quality and safety pursuant to 10 CFR 50.55a for the proposed alternative to the piping ISI requirements with regard to the number of inspections, locations of inspections, and methods of inspections. This conclusion is founded on the findings discussed in the

remainder of this section.

The methodology conforms to the guidance provided in RGs 1.174 and 1.178, in that applying the methodology results in risk-neutrality or risk-reduction for the piping addressed in the RI-ISI program. According to this methodology, the licensees will identify those aspects of the plants' licensing bases that may be affected by the proposed change, including rules and regulations, FSAR, technical specifications, and licensing conditions. In addition, the licensees will identify all changes to commitments that may be affected as well as the particular piping systems, segments, and welds that are affected by the change in the ISI program. Specific revisions to inspection scope, schedules, locations, and techniques will also be identified, as will plant systems and functions that rely on the affected piping. The WOG procedure to subdivide piping systems into segments is founded on portions of piping having the same consequences of failure to be placed into the same piping segments. In addition, consideration is given to identifying distinct segment boundaries at branching points, locations of pipe size changes, isolation valve, and MOV and air-operated valves (AOV) locations.

Each segment's potential for failure is appropriately represented as failure on demand, unavailability, or frequency of failure. The relative potential for failure is consistent with systematic consideration of degradation mechanisms, segment and weld material characteristics, and environmental and operating stresses. The assessment of component failure potential attributable to aging and degradation takes into account uncertainties. Computer codes used to generate quantitative failure estimates have been verified and validated against established industry codes. Supplement 1 to WCAP-14572, Revision 1, describes the models, software, and validation of the SRRA computer code. The SRRA model is used to estimate the probability of piping failures. Peer reviews of the SRRA code have been performed on several occasions. The author of the code has published several papers for presentation at technical conferences, with technical peer reviews being part of the publication process. Earlier versions of the code have been used by Westinghouse in past research projects which have also been reviewed by the staff. In addition, the methodology of the code parallels approaches used in other generally accepted probabilistic structural mechanics codes, such as pc-PRAISE. Technical reviews of the SRRA code were performed during the Surry Unit 1 pilot plant study by the staff, its contractors, and the ASME Research Task Force on Risk-Based Inservice Inspection. These efforts provided a detailed review of the Westinghouse SRRA code, and comments from this effort resulted in several improvements to the SRRA code, as reflected in WCAP-14572, Revision 1, Supplement 1. The recent reviews were based on (1) documentation of the code, (2) detailed descriptions of example calculations, (3) trial calculations performed with the SRRA code by peer reviewers, and (4) benchmark calculations to compare failure probabilities predicted by the SRRA code and the pc-PRAISE code.

The stress corrosion cracking model of the SRRA code has a relatively simple technical basis, which does not attempt to model the complex failure mechanism in a detailed mechanistic manner. The calculations are based on a number of significant assumptions as discussed in Section A.4.3 of this SER. In particular, the code documentation given in WCAP-14572, Revision 1, Supplement 1, acknowledges the limitations of the model, and recommends the use of the pc-PRAISE computer code if predictions from a more refined mechanistic model are needed. The probabilistic fracture mechanics calculations for IGSCC have not been benchmarked for consistency with plant-specific and industry operating experience. In this regard, the Surry Unit 1 evaluations do not provide a particularly good basis to evaluate the

SRRA stress corrosion cracking model, because IGSCC makes only a small contribution to piping failures for PWR plants. The staff therefore requires that the IGSCC model be further evaluated on future applications to BWR plants, because IGSCC is a major factor governing piping integrity at BWRs.

The staff noted several limitations, e.g., IGSCC modeling, lack of benchmarking of E-C model compared to existing E-C programs, lack of modeling of complex geometries, etc. in the SRRA code. These limitations in the SRRA code result in a need for judicious use of the code and careful attention by the expert panel to ensure that the results of the code seem appropriate. It should be noted that the use of SRRA, or other probabilistic fracture mechanics codes, to estimate relative failure frequencies of piping systems and components is appropriate, but that the ability of such codes to estimate failure frequencies is limited by the quality of the input data and modeling limitations inherent in the code itself. Providing bounding or conservative inputs to the model or relying on the conservative nature of certain aspects of the code can potentially lead to inappropriate conclusions regarding the relative susceptibility to failure of various piping segments and components. Therefore, it is extremely important that these limitations be recognized by the user of the code and by the licensees' expert panel and that the results of the analyses are carefully scrutinized to assure that they make sense when compared to engineering knowledge of degradation mechanisms and plant specific and generic operating experience. Further details of the limitations and staff recommendations on the use of the SRRA code are provided in Section A.25 of this SER.

The impact on risk attributable to piping pressure boundary failure considers both direct and indirect effects. Consideration of direct effects includes failures that cause initiating events or disable single or multiple components, trains or systems, or a combination of these effects. The methodology also considers indirect effects of pressure boundary failures affecting other systems, components and/or piping segments, also referred to as spatial effects such as pipe whip, jet impingement, flooding or failure of fire protection systems.

The results of the different elements of the engineering analysis are considered in an integrated decision-making process. The impact of the proposed change in the ISI program is founded on the adequacy of the engineering analysis, acceptable change in plant risk, and the adequacy of the proposed implementation and performance monitoring plan, in accordance with RG 1.174 guidelines.

WOG methodology also considers implementation and performance-monitoring strategies. Inspection strategies ensure that failure mechanisms of concern have been addressed and there is adequate assurance of detecting damage before structural integrity is impacted. Safety significance of piping segments is taken into account in defining the inspection scope for the RI-ISI program.

System pressure tests and visual examination of piping structural elements will continue to be performed on all Class 1, 2, and 3 systems in accordance with the ASME BPVC Section XI program, regardless of whether the segments contain locations that have been classified as HSS or LSS. The RI-ISI program applies the same performance measurement strategies as existing ASME requirements and, in addition, broadens the inspection volumes at weld locations.

WCAP-14572, Revision 1, has provided the methodology to conduct an engineering analysis of the proposed changes using a combination of engineering analysis with supporting insights from a PRA. Defense-in-depth and quality is not degraded in that the methodology provides reasonable confidence that any reduction in existing inspections will not lead to degraded piping performance when compared to existing performance levels. Inspections are focused at locations with active degradation mechanisms as well as selected locations that monitor the performance of the front-line primary system piping (the second barrier of fission product release).

Safety margins used in design calculations are not changed. Piping material integrity is monitored to ensure that aging and environmental influences do not significantly degrade the piping to unacceptable levels.

Augmented examination program for degradation mechanisms such as IGSCC and EC would remain unaffected by the RI-ISI program and WCAP-14572 should not be taken as a basis to change the augmented inspection program.

Although the staff finds that the general guidance provided in WCAP-14572 Revision 1 (and as amended by Ref. 8) to be acceptable, application of this guidance will be plant-specific. As such, individual applications in RI-ISI must address the various plant-specific issues. These include:

- The quality, scope and level of detail of the PRA used, as described in RG 1.174 and 1.178 (see Section 3.3 and 3.3.1 of this SER).

- The guidelines and assumptions used for the determination of direct and indirect effects of flooding, including assumptions on the failure of components affected by the pipe break (see Sections 3.2.4 and 3.3.1 of this SER)

- The criteria, and the justification for the criteria used for the categorization of piping segments, including sensitivity studies to model human actions and segment failure probability (see Section 3.3.2 of this SER).

In the public meeting on October 8, 1998 (Ref. 18), the staff and the industry discussed the information to be submitted to the NRC and the list of retrievable onsite documentation for potential NRC audits of licensees that seek to utilize the WOG methodology for their RI-ISI program. The staff's expectation is that contents of submittals to NRC listed below will consist of brief statements and results of program development with details available as retrievable onsite documentation for potential NRC audits:

- Submittal Contents

(1) justification for statement that PRA is of sufficient quality
(2) summary of risk impact
(3) current Inspection Code
(4) impact on previous relief requests
(5) revised FSAR pages impacted by the change, if any
(6) process followed (WCAP, Code Case, and exceptions to methodology, if any)

(7) summary of results of each step (e.g., number of segments, number of HSS and LSS segments, number of locations to be inspected, etc.)
(8) a statement that RG principles are met (or any exceptions)
(9) summary of changes from current ISI program
(10) summary of any augmented inspections that would be impacted

- Retrievable Onsite Documentation for Potential NRC Audit

(1) scope definition
(2) segment definition
(3) failure probability assessment
(4) consequence evaluation
(5) PRA model runs for the RI-ISI program
(6) risk evaluation
(7) structural element/NDE selection
(8) change in risk calculation
(9) PRA quality review
(10) continual assessment forms as program changes in response to inspection results
(11) documentation required by ASME Code (including inspection personnel qualification, inspection results, and flaw evaluations)

5.0 REFERENCES

1. Westinghouse Topical Report, WCAP-14572, "Westinghouse Owners Group Application of Risk-Informed Methods to Piping Inservice Inspection Topical Report," Revision 1, October 1997.

2. Westinghouse Topical Report, WCAP-14572, Supplement 1, "Westinghouse Structural Reliability and Risk Assessment (SRRA) Model for Piping Risk-Informed Inservice Inspection," Revision 1, October 1997.

3. U.S. Nuclear Regulatory Commission, "An Approach for Using Probabilistic Risk Assessment in Risk-Informed Decisions on Plant-Specific Changes to the Licensing Basis," Regulatory Guide 1.174, July 1998.

4. U.S. Nuclear Regulatory Commission, "An Approach for Plant-Specific, Risk-Informed Decisionmaking: Inservice Inspection of Piping," Regulatory Guide 1.178 for Trial Use, September 1998.

5. American Society of Mechanical Engineers, Boiler and Pressure Vessel Code, Code Case N-577, "Risk-Informed Requirements for Class 1, 2, and 3 Piping, Method A," September 2, 1997.

6. Standard Review Plan Chapter 3.9.8, "Standard Review Plan for Trial Use for the Review of Risk-Informed Inservice Inspection of Piping," October 1998.

7. Standard Review Plan Chapter 19.0, "Use of Probabilistic Risk Assessment in Plant-Specific, Risk-Informed Decisionmaking: General Guidance," NUREG-0800, July 1998.

8. Letter from Louis F. Liberatori, Jr., Chairman (Westinghouse Owners Group), to Peter C. Wen (NRC), "Transmittal of Responses to NRC Open Items on WOG RI-ISI Program and Reports WCAP-14572, Revision 1, and WCAP-14572, Revision 1, Supplement 1," September 30, 1998.

9. Letter from Peter C. Wen (NRC), to Andrew Drake (Westinghouse Owners Group), "Open Items Related to Westinghouse Owners Group Application of Risk-Informed Methods to Piping Inservice Inspection (WCAP-14572, Revision 1)," September 2, 1998.

10. Letter from P. Krishnaswamy (Battelle-Columbus), to Deborah Jackson (NRC), "Independent Peer Review of Draft Regulatory Guide DG-1063," October 31, 1997.

11. Chexal, B. et al., "CHECWORKS Flow-Accelerated Corrosion, Version 1.0F, User Guide," Final Report TR-103198-P1, Electric Power Research Institute, June 1998.

12. Letter from W.T. Platt and T. L.Chu (Brookhaven National Laboratory), to Jack Guttmann (NRC), "Independent Peer Review of Draft Regulatory Guide DG-1063," October 15, 1997.

13. American Nuclear Society, "Design Basis for Protection of Light-Water Nuclear Power

Plants Against the Effects of Postulated Pipe Rupture," ANSI/ANS-58.2-1988, 1988.

14. Westinghouse Systems Standard Design Criteria (SSDC) 1.19, "Criteria for Protection Against Dynamic Effects Resulting from Pipe Rupture," Revision 1, 1980.

15. U.S. Nuclear Regulatory Commission NUREG-1661," Technical Elements of Risk-Informed Inservice Inspection Programs for Piping" to be published.

16. Letter from Harry Martz (Los Alamos National Laboratory), to Lee Abramson (NRC), "Independent Peer Review of Draft Regulatory Guide DG-1063," September 5, 1997.

17. Letter from Anthony R. Pietrangelo (Nuclear Energy Institute), to Dr. Brian W. Sheron (NRC), containing responses to NRC's Request for Additional Information, March 13, 1997,

18. Minutes for NRC Meeting with Nuclear Energy Institute (NEI) Regarding Risk-Informed Inservice Inspection Programs on October 8, 1998.

APPENDIX A

Review of WCAP-14572, Revision 1, Supplement 1, "Westinghouse Structural Reliability and Risk Assessment Model for Piping Risk-Informed Inservice Inspection"

A.1 INTRODUCTION

Supplement 1 to WCAP-14572, Revision 1, describes the models, software and validation of the SRRA computer code. The SRRA model is used to estimate the probabilities of piping failures, which are input to the PRA in support of the WOG RI-ISI program for piping.

A.2 Background

RG 1.178 provides an option for licensees to quantitatively estimate the reliability of individual pipe segments within the scope of the RI-ISI program. These estimates are to be consistent with industry databases on piping failure rates and relevant to plant-specific operating experiences. Detailed knowledge of piping design parameters, materials degradation mechanisms, plant operating conditions, and the likelihood of fabrication and service-induced flaws are elements of a quantitative analysis that need consideration. The use of probabilistic structural mechanics computer codes is an acceptable approach to estimate structural failure probabilities on the basis of such detailed knowledge.

The SRRA computer software was developed by the Westinghouse Electric Company over the last decade and has been enhanced to support the development of risk-informed inservice inspection programs of piping. This software was applied in plant applications of the RI-ISI program development for the Millstone Unit 3 and Surry Unit 1 nuclear power plants. The NRC staff and contractor personnel were briefed at public meetings during the course of these pilot applications. During these studies and methods development activities, the SRRA code was enhanced as issues were identified and resolved.

The current review was performed recognizing that probabilistic structural mechanics codes, including the SRRA code, are limited in their ability to predict absolute values of failure probabilities with a high degree of accuracy. The models themselves, along with the various inputs needed to apply these models, are subject to many uncertainties. In addressing the value of a given computer code to calculate failure probabilities the following considerations were taken to be important:

- While it is expected that advances in the technology will someday reduce the levels of uncertainty in calculated failure probabilities, the ability of the models to estimate relative failure probabilities is considered to be more important than their ability to predict absolute values. In this regard, RI-ISI is largely governed by relative values if risk both for the ranking and selection of components to be inspected and for the evaluation of risk increases or decreases associated with changes in the inspection programs.

- Relative values of failure probabilities are not used directly in the RI-ISI process. However, it is the relative values of failure probabilities along with relative values of failure consequences that are important to the final results of the risk-informed evaluations.

- It is important to the RI-ISI process to calculate absolute values of failure probabilities as accurately as possible, because an increased levels accuracy and consistency in the calculations will contribute to a corresponding enhancement in the accuracy of the relative values of failure probabilities.

- The calculation of failure probabilities with codes such as SRRA should not be performed in isolation of other independent methods of estimating failure probabilities, such as data bases and plant operating experience. Results of calculations should always be evaluated for reasonableness and consistency, and the assumptions and inputs to the calculations should be refined as appropriate.

A.3 Overview of Assessment

Over the past 3 years, as ASME-Research and WOG developed methods to perform RI-ISI of piping, the staff held public meetings with both groups to develop guidelines for acceptable uses of probabilistic fracture mechanics computer codes. In addition, with the assistance of Pacific Northwest National Laboratory (PNNL), the staff performed independent audit calculations to validate the results of the SRRA computer code.

The following discussion addresses the strengths and limitations of the Westinghouse SRRA computer code. Given the broad scope of piping designs and operating conditions, it was not expected that any one computer code could address all of the failure mechanisms and piping designs encountered in a nuclear power plant. Therefore, a key part of this review focused on the documentation for the Westinghouse code and how well it achieved the following objectives:

(1) Inform the code user about code limitations.
(2) Provide technically sound guidance on alternative approaches to estimate piping failure probabilities.

Important elements of this evaluation include the equations and assumptions (inputs) used in the piping reliability models, as well the validation of the estimated failure probabilities. In some cases, it is appropriate to place certain detailed inputs outside the direct control of the user (incorporating inputs into the model itself). In other cases, specific recommendations can be provided in the user document with example problems. Where possible, input values were standardized for specific applications. Many of these inputs were the subject of significant discussions during periodic public meetings on the Surry Unit 1 pilot applications, and are addressed in this review.

A.4 REVIEW OF SPECIFIC ISSUES

This section addresses specific aspects of the probabilistic structural mechanics model from the standpoint of the consistency and reasonableness of the estimated failure probabilities.

A.4.1 Failure Mechanisms

As described in the following sections, the Westinghouse SRRA code addresses with various levels of detailed modeling the degradation mechanisms of (1) fatigue, (2) stress corrosion cracking, and (3) flow-assisted corrosion/wastage or wall thinning. The present review concludes that acceptable technical approaches are used for each of these mechanisms.

A.4.2 Fatigue

The fatigue model assumes that all failures by this mechanism result from preexisting flaws. Inputs to the model are sufficiently flexible to address low cycle fatigue attributable to normal plant transients, high cycle fatigue from thermal fatigue (resulting, for example, from stratification of fluids), and high cycle vibrational fatigue.

Calculations are based on a relatively detailed mechanistic model which relates fatigue crack growth to the amplitude and frequency of the cyclic stresses. The Westinghouse/SRRA model for fatigue is very similar to that used in the NRC developed pc-PRAISE code, and numerical results of the SRRA code have been successfully benchmarked (as described later) against results from the pc-PRAISE code.

In common with the pc-PRAISE code, Supplement 1 to WCAP-14572 does not address fatigue crack initiation except in an indirect manner by conservatively assuming that initiated cracks are present at the beginning of plant operation. The limitations of this approach to fatigue crack initiation are addressed below.

In common with the pc-PRAISE code, fatigue cracks are all conservatively assumed to be located at the pipe inner surface. Crack growth in both the depth direction (through-wall direction) and in the length direction are simulated in a manner essentially the same as that used in the pc-PRAISE code.

The SRRA code permits the simulation of uncertainties in the levels of low and high fatigue stress cycles, which treats the amplitude of fatigue stress as a deterministic parameter.

The staff concludes that the SRRA code addresses fatigue crack growth in an acceptable manner since it is consistent with the technical approach used by other state-of-the-art codes for probabilistic fracture mechanics. It should be noted, however, that realistic predictions of failure probabilities require that the user define input parameters, which accurately represent all sources of fatigue stress and the probabilities for preexisting fabrication cracks in welds. The major limitation of the model is its inability to realistically simulate the initiation of fatigue cracks, which experience has shown to be the primary contributor to fatigue failures at operating plants.

A.4.3 Stress Corrosion Cracking

The stress corrosion cracking model of the SRRA code has a relatively simple technical basis, which does not attempt to model the complex failure mechanism in a detailed mechanistic manner. The calculations are based on a number of significant assumptions as follows:

- All piping failures by this mechanism result from preexisting fabrication flaws, although service experience with stress corrosion cracking indicates that such failures are dominated by cracks in welds that initiate during plant operation.

- The effects of crack initiation can conservatively be estimated by assuming one flaw per weld at the start of plant operation, with the flaw size distribution being the same as that for

welding-related fabrication flaws. Although calculations based on this assumption can provide relative probabilities of failure for different pipe segments, it is important for the expert panel to review the predicted failure probabilities to ensure a selection of input parameters that provides predictions, which are reasonable and consistent with plant operating experience.

- There is sufficient knowledge on the part of the plant technical staff and the expert panel (in combination with plant operating history with the occurrence of IGSCC) of the plant-specific environmental factors (water chemistry, temperature, etc.), levels of weld sensitization, and residual stress levels to identify pipe segments that have a high, medium or low potential for failure by stress corrosion cracking.

- The probability of through-wall cracks for the high failure potential case can be calculated using a bounding crack growth rate curve developed in 1988 (NUREG-0313), this curve relates crack growth rates to crack tip stress intensity factors.

- IGSCC related crack growth rates of moderate and none are assigned in the SRRA code to be a factor of 0.5 and 0.0 less than the bounding rate, with engineering judgement used to assign crack growth rates to these broad categories. Alternatively, the SRRA user can directly assign a numerical factor to be applied to the bounding crack growth rates.

In summary, the stress corrosion cracking model of the SRRA code provides a systematic basis to translate inputs into estimated failure probabilities on the basis of engineering judgement and operating experience. The model combines the inputs for stress corrosion cracking with other factors such as pipe dimensions and applied loads to predict pipe failure probabilities. While some of the modeling assumptions appear to be quite conservative, the calculations for the Surry Unit 1 plant appear to predict reasonable trends.

In particular, the code documentation given in WCAP-14572, Revision 1, Supplement 1, acknowledges the limitations of the model, and recommends the use of the pc-PRAISE computer code if predictions from a more refined mechanistic model are needed. The probabilistic fracture mechanics calculations for IGSCC have not been benchmarked for consistency with plant-specific and industry operating experience. In this regard, the Surry Unit 1 evaluations do not provide a particularly good basis to evaluate the SRRA stress corrosion cracking model, because IGSCC makes only a small contribution to piping failures for PWR plants. The staff therefore requires that the IGSCC model be further evaluated on future applications to BWR plants, because IGSCC is a major factor governing piping integrity at BWRs.

A.4.4 Flow Assisted Corrosion/Wastage

The wastage model of the SRRA code has a relatively simple technical basis and does not attempt to model the complex wall thinning processes in a detailed mechanistic manner. Deterministic models, such as the CHECKWORKS code developed by the Electric Power Research Institute (EPRI) are available to relate wall thinning rates to basic parameters such as flow velocity, chemical composition of the pipe material, fluid temperature, single-phase water versus two-phase steam/water mixture, and pH level of the fluid. However, probabilistic forms of

such deterministic models have not yet been developed.

While a close reading of the code documentation as given in WCAP-14572, Revision 1, Supplement 1, provides information on assumptions made in the SRRA wall thinning model, many users could have difficulty relating inputs to the model to the type of information available to plant technical staff. In addition, users may not have sufficient insight into the assumptions behind the wall thinning model to perform calculations in a correct and consistent manner. However, the calculations for Surry Unit 1 had sufficient participation by the Westinghouse staff to ensure that calculations for the Surry Unit 1 study yielded reasonable results.

Supplement 1 to WCAP-14572, Revision 1, provides information on assumptions made in the SRRA wall thinning model. Before issuing of this SER, the staff expressed a concern that many users could have difficulty relating inputs to the model with the type of information available to plant technical staff. In addition, users may not have sufficient insight into the assumptions behind the wall thinning model to perform calculations in a correct and consistent manner. Consequently, the staff indicated that WCAP-14572 should provide guidance for plant personnel executing the SRRA code for flow-assisted corrosion (FAC) that provides reasonable assurance that the results calculated for FAC failure probabilities are appropriate. In the public meeting on September 22, 1998 [item 7 (b), Ref. 8], Westinghouse stated that the next Revision of WCAP-14572 will provide guidance for material wastage potential. The staff concludes that the guidance for estimating the material wastage potential is acceptable since, if material wastage rates are high enough to proceed through the pipe wall, the probabilities of small leak, large leak and break are all calculated to be the same. The staff's approval is conditioned upon Westinghouse making the change to WCAP-14572 described above.

The wall thinning model in the SRRA code is based on the following assumptions:

- The user of the code is able to estimate the rate of wall thinning (e.g., inches of wall thickness reduction per year) and express this rate in terms of a "best estimate" value and a distribution function (e.g., log-normal distribution) that describes the variability or uncertainty associated with the best estimate.

- Wall thinning can be treated in a simplified manner by assuming that the maximum local rate of thinning occurs uniformly over a substantial length of straight pipe; this is a conservative assumption which does not account for variations (reduced rates of thinning) in the axial or circumferential directions as is case for the important case of local wall thinning at elbow locations.

- Consistent with the previous assumption, all failures of piping resulting from wall thinning will result in pipe breaks rather than leakages; pipe failures will occur when the simulated level of pressure-induced hoop stress becomes equal to the simulated values of the flow stress of the piping material.

Data from industry experience, along with structural mechanics considerations of localized thinning, provide evidence that leak-before-break events are more likely than sudden pipe breaks. The assumption that leak-before-break does not apply, as used in the SRRA code, is a conservative assumption.

The input parameter for the wall thinning rate is expressed in a simplified manner in the SRRA code with a parameter of 1.0 being assigned whenever the user believes that the thinning rate is high. The code assigns a "best estimate" thinning rate of 0.0095 inch per year for this rate parameter along with a variability described by a log-normal distribution which implies that the natural logarithm of the thinning rate has a standard deviation of 0.893 (which corresponds to a value of 2.3714 for the so called "deviation or factor" used as input to the SRRA code). For a rate parameter other than 1.0, the best estimate of the thinning rate is assigned to be proportional to the selected value of the parameter.

The staff concludes that plant technical personnel have sufficient knowledge and field measurements of wall thinning rates to develop reasonable inputs to the SRRA code for estimating failure probabilities for FAC degradation mechanisms. Such information is generally available as a result of the ongoing programs for flow-assisted corrosion which are required at all plants. The approach uses data and/or engineering judgement to estimate a wall thinning rate. The probabilistic structural mechanics model then calculates failure probabilities based on the estimated thinning rates, in combination with other governing parameters such as the pipe dimensions, applied stresses, and material strengths.

Calculations with the model must be closely coordinated with the existing plant programs for the management of wall thinning, because the model requires inputs that can be obtained only from the knowledge gained from ongoing monitoring and evaluations of wall thinning rates. Furthermore, application of the probabilistic model of the SRRA code should not be used to make changes in existing programs for the inspection and monitoring of piping for wall thinning.

A.4.5 Failure Modes (Leaks and Breaks)

The staff finds the code's failure modes capabilities acceptable for RI-ISI application since the SRRA code was modified during the Surry Unit 1 pilot application to address the failure mode of large system-disabling leaks in addition to the failure modes of small leaks (through-wall cracks) and pipe breaks. The disabling leak rate for each system is assigned to be consistent with existing evaluation of plant operational and safety evaluations. The modified program can address the various modes of pipe failure corresponding to consequences identified in plant PRAs and safety analysis reports.

A.5 Component Geometries

The SRRA code was developed to address the simple geometry of a circumferential flaw in a girth welded pipe joint. In this regard, the SRRA code has a capability similar to that of other state-of-the-art probabilistic fracture mechanics codes such as pc-PRAISE.

Application of SRRA to other more complex component geometries (e.g., elbow and tee pipe fittings) requires conservative assumptions founded on treating the maximum local stresses as uniform through the pipe wall, with no credit taken for the mitigating effects of stress gradients. Calculations by Khaleel and Simonen (1997) have shown that this assumption can result in failure probabilities being overestimated by an order of magnitude or more.

With proper attention to stress inputs and the interpretation of calculated results, the SRRA code can be used effectively to estimate failure probabilities for components with more complex geometries. Before issuing this SER, the staff identified an open item that WCAP should provide guidance for the analyst on the code limitations for complex geometries and guidance for effective use of the code in such applications. In the public meeting on September 22, 1998 [item 12, Ref. 8], Westinghouse stated that the SRRA piping models only apply to standard piping geometry (circular cylinders with uniform wall thickness). Westinghouse further stated that a limitation on the use of non-standard geometry will be added in the next revision of WCAP-14572. The staff finds this clarification of the code limitation to be acceptable. The staff's approval is conditioned upon Westinghouse making the change to WCAP-14572 described above.

A.6 Structural Materials

For calculational convenience, structural reliability computer codes should be able to address a range of piping materials. The capabilities of the SRRA code meets this criterion. The code has generally been applied in a mode which uses simplified inputs consistent with standardized material properties for stainless and ferritic piping materials. However, the code can also be operated in a mode which allows greater flexibility for the specification of input parameters for material properties. The staff recommends that licensees apply the code in a manner that accounts for the known plant-specific material characteristics as they may be governed by such factors as carbon content, heat treatments, etc.

As with any computer code, the quality of results often depends on the capabilities of the code user. In this case, the user must first recognize situations for which it is inappropriate to use the standard menu selections of material properties. Before issuing this SER, the staff indicated that WCAP-14572 should specify the level of training and qualification that the code user needs to properly execute the SRRA code. In its response in the public meeting on September 22, 1998 [item 13, Ref. 8], Westinghouse indicated that the next revision of WCAP-14572 will state that to ensure that the simplified SRRA input parameters are consistently assigned and the SRRA computer code is properly executed, the engineering team for SRRA input should be trained and qualified. The revised WCAP will also list the topics covered in this training as presented in the public meeting on September 22, 1998 [item 13, Ref. 8]. The staff has reviewed the additional guidance for training and qualification and determined that it provides reasonable assurance that code users will be able to properly execute the SRRA code. The staff's approval is conditioned upon Westinghouse making the change to WCAP-14572 described above.

A.7 Loads and Stresses

The SRRA code has several inputs to describe the loads and stresses that govern piping failure. The stresses used for plant specific applications should be based on actual plant experience and operational practices (including thermal and vibrational fatigue stresses), which may differ from the stresses used for purposes of the original design of the plant. The types of stresses of concern include residual and vibrational (fast transient) stresses which are specifically addressed below. Other inputs address low cycle fatigue (slow transients) and design-limiting stresses which include the effects of seismic loadings. For applications of RI-ISI programs to

actual plants, plant-specific inputs such for loads and stresses should be used.

All calculations assume that the stresses are uniformly distributed through the thickness of the pipe wall. This simplifying assumption is conservative and could be avoided (with methods currently used in the pc-PRAISE code).

The inputs for low cycle fatigue can address only one type of loading transient, which is assumed to represent the dominant contribution to fatigue crack growth, although well-known methods exist to evaluate the combined effects of many operational transients. However, limiting the evaluation to one dominant transient is a reasonable approach, given the intended scope of the SRRA code, which is to estimate failure probabilities using simplified approaches.

Similarly, the SRRA code requires the user to select a single level of design-limiting stresses and an associated occurrence frequency which best characterizes the loads governing the probabilities of a pipe break. The selection is based on plant experience, records of transients, engineering judgement or other considerations. In some cases, the normal operating loads will be more important (because they occur with a probability of 100 percent) than much larger seismic loads that have lower occurrence rates (e.g., a frequency 10^3 per year). Applications of the SRRA code before the 1996 benchmarking activity were founded on design-limiting stresses related to seismic loads, and with a standardized occurrence frequency of 10^3 per year. Discussions during the 1996 benchmarking effort noted that higher probability loads should also be addressed. These discussions led Westinghouse to use as inputs the design-limiting (e.g., pressure, dead weight, etc.) loads in combination with an occurrence frequency of once per year, or probabilistically distributed as a function of time in the calculations, an approach which may result in conservative predictions of pipe break frequencies.

The staff finds the treatment of loads and stresses as discussed above to be conservative and acceptable for the purpose of RI-ISI program application since the use of less conservative loads and stresses would require more detailed structural analyses and in most cases should not impact either the categorization process or the change in risk calculations. In reviewing plant specific calculations performed with the SRRA code it has been noted that sensitivity calculations have been used to evaluate the effects of conservative inputs for piping stress. For example, failure probabilities associated with high stresses due to postulated snubber lockup have been adjusted to account for the probability that the lockup condition will actually occur. Such evaluations are an important step to ensure that conservative inputs do not unrealistically impact the categorization and selection of piping locations to be inspected. In summary, while an appropriate selection for input parameters for loadings is a critical step in the evaluation, licensees have the needed expertise to identify the required input to the SRRA input menu.

A.8 Vibrational Stresses

The NRC staff and the industry have recommendations that address appropriate levels (as a function of pipe size) for vibrational stresses to be used in failure probability calculations. These recommendations arose from concerns regarding assumptions made for early calculations performed for Surry Unit 1 by Westinghouse and Virginia Power, and were developed with guidance from the ASME Research Task Force on Risk-Based Inspection Guidelines.

Since the Westinghouse SRRA code has incorporated the recommendations of the ASME Task Force as default values for those piping locations at which high levels of vibrational stresses are expected, the staff concludes that the treatment of vibrational stress as in the SRRA code is acceptable. The recommended levels of vibrational stresses will be fully documented in a revision to WCAP-14572. The actual piping locations where vibrational stresses are to be expected are assigned by plant technical staff on the basis of judgement taking into account such factors as proximity to rotating equipment and knowledge of plant operating experience. The staff's approval is conditioned upon Westinghouse making the change to WCAP-14572 described above.

A.9 Residual Stresses

The Westinghouse SRRA code includes inputs for residual stress which describe both median values and variability in the level of stress. The residual stress contribution is an important contribution to the growth of stress corrosion cracks, and can also influence the growth of fatigue cracks through the so-called R-Ratio effect.

Appropriate levels of welding residual stress were discussed in review meetings held during the Surry Unit 1 pilot application, and a consensus was developed to guide the selection of residual stress inputs. Since the SRRA code uses the resulting recommendations which specify a log-normal distribution to describe the uncertainty in residual stress, with an upper bound on the distribution (or truncation) at 90 percent of the flow stress (corresponding to the 90th percentile of the log-normal distribution), the staff finds the treatment of residual stresses acceptable.

A.10 Treatment of Conservatism

RG-1.174 recommends that all calculations used in the categorizing risk (including the calculations of component failure probabilities) should be performed on a "best estimate" basis rather than conservatively. Conservative assumptions can introduce undesirable biases into the ranking process by masking the significance of those components for which realistic rather than conservative evaluations are performed. In the case of inservice inspections, the result could, for example, lead to an inappropriate amount of inspection of small versus large pipes, or excess inspection for stress corrosion cracking versus inspection for flow-assisted corrosion.

With a few exceptions, the Westinghouse SRRA code performs "best estimate" calculations. On the basis of this review, the staff concludes that conservative assumptions are consistent with practices used in similar computer codes, and/or are consistent with limitations of current technology to predict structural failures. Nevertheless, particular applications of the code may address uncertainties regarding code inputs by assigning very conservative values, and thereby generate inappropriately conservative estimates of failure probabilities. The present review also addresses the following potential sources of conservatism on the basis of practices used in the Surry Unit 1 pilot study:

- Inputs for the number and sizes of fabrication flaws are a significant source of uncertainty. In estimating the number of flaw in a weld, the SRRA code accounts for the volume of metal in the weld by relating this volume to the circumference and wall thickness of the pipe. The

SRRA code, like the pc-PRAISE code, places all flaws at the pipe inner surface, and in this step makes conservative assumptions about the fraction of the flaws in each given weld which should be counted as surface flaws. This estimated fraction is believed to be somewhat more conservative for thicker wall piping than for thinner wall piping, and may therefore bias inspections to larger piping.

- The treatment of stress corrosion cracking could give very conservative predictions of failure probabilities because of conservative assumptions in the structural mechanics model. In particular, the model makes three conservative assumptions:

  (1) There is a 100 percent probability that an IGSCC crack will initiate in each weld.
  (2) The crack initiates at time equals zero.
  (3) The size distribution of the initiated cracks is the same as for welding related flaws.

  Evidently, there are offsetting factors which lower the calculated crack growth rates and thereby account for a generally good correlation of the calculated failure probabilities with service experience. The reason for the good correlation with experience is not clear. However, It appears that the SRRA calculations were performed with the intent of achieving qualitative agreement with plant operating experience. In this regard, staff recommendations encourage the use of data and operating experience to augment computer models to estimate piping failure probabilities. The WCAP does not document a formal process to use experience as a means to calibrate the SRRA calculations. Nevertheless, discussions during public meetings for reviews of the Surry Unit 1 pilot application did focus on piping locations with highest values of failure probabilities with attention to the degradation mechanisms involved and how the predictions correlated with service experience. Evidently the SRRA models have been adjusted or calibrated to ensure that the piping locations with the highest potential for IGSCC have calculated failure probabilities that are generally consistent with the experience. Having "anchored" the highest values of calculated probabilities, the model permitted probabilities for locations with lower potentials to be estimated on the basis of the relative values of calculated failure probabilities.

- The review of the Surry Unit 1 pilot study indicates conservative engineering judgements used to assign cyclic and design limiting stress. One example is that vibrational stresses are often assumed to be present (with a probability of 100 percent), where in reality the identified locations only have a potential for the occurrence of such stresses. At other locations, code limiting stress levels are assigned because results of detailed stress calculations were not available. However, review of the predicted failure probabilities calculated for the Surry pilot plant showed consistency with available industry data for the frequency of vibrational failures. As in the case of failures due to IGSCC, the results of SRRA calculations for vibrational failures were reviewed during public meetings. Inputs for vibrational stress levels were refined with an objective to predict failure probabilities that were reasonable and consistent with plant operating experience . The staff, therefore, finds the selected application of conservatism for vibrational stresses acceptable.

A.11 Numerical Methods and Importance Sampling

On the basis of this review, the staff concludes that the SRRA code calculates failure

probabilities using acceptable statistical and probabilistic methods. The Monte-Carlo method as implemented in the SRRA code is a standard approach commonly used in probabilistic structural mechanics codes including the pc-PRAISE code. Importance sampling, again a common and well-accepted approach, increases the computational efficiency of the Monte-Carlo procedure by shifting the distributions for random variables to increase the number of simulated failures. The magnitude of shift applied to the variables by the SRRA code is relatively modest and is not believed to be sufficient to cause incorrect estimates of failure probabilities.

A.12 Documentation and Peer Review

Having reviewed WCAP-14572, Revision 1, Supplement 1, the staff concludes that this document, along with other referenced technical reports and papers, provides an acceptable level of documentation for the SRRA computer code.

Peer reviews of the SRRA code have also been performed on several occasions. The author of the code has published several papers for presentation at technical conferences, with technical peer reviews being part of the publication process. Earlier versions of the code have been used by Westinghouse in past research projects which have also been reviewed by the staff. In addition, the methodology of the code parallels approaches used in other generally accepted probabilistic structural mechanics codes, such as pc-PRAISE.

During the Surry Unit 1 pilot plant study, technical reviews of the SRRA code were performed by the NRC staff, its contractors, and the ASME Research Task Force on RI-ISI. These reviews provided a detailed assessment of the Westinghouse SRRA code on the basis of (1) documentation of the code, (2) detailed descriptions of example calculations, (3) trial calculations performed with the SRRA code by peer reviewers, and (4) benchmark calculations to compare failure probabilities predicted by the SRRA code and the pc-PRAISE code. Related comments resulted in several improvements to the SRRA code, as reflected in WCAP-14572, Revision 1, Supplement 1

A.13 Validation and Benchmarking

Westinghouse has used a variety of approaches to validate the ability of structural mechanics code to predict component failure probabilities. These approaches have included comparing code predictions with plant operating experience, and comparing SRRA predictions with predictions made by other probabilistic structural mechanics codes. Results of these efforts are described in WCAP-14572, Revision 1, Supplement 1, and in a recent ASME technical paper (Bishop 1997). The results of these validation efforts are reviewed in the following subsections.

A.13.1 Benchmarking Against pc-PRAISE

As part of the Surry Unit 1 pilot application during 1996, a benchmarking activity to compare results from the Westinghouse SRRA code with the pc-PRAISE code was completed. The scope of the benchmarking calculations was limited to the failure mechanism of fatigue, because both codes address this mechanism and approach the fatigue evaluation in a similar manner.

The objective of these calculations was to start with identical specifications for input parameters, and to establish whether the two codes predict the same or similar probabilities of failure for small leaks, large leaks, and pipe rupture.

The 1996 benchmarking calculations did not address the failure mechanisms of stress corrosion cracking or wall thinning caused by flow-assisted corrosion. The pc-PRAISE code does not address the failure mechanism of wall thinning, and therefore provided no means to benchmark the predictions derived using the wall thinning model from the Westinghouse SRRA code. In addition, although both codes address stress corrosion cracking, they use significantly different technical approaches which result in very different types of input parameters. Therefore, the appropriate validation approach for this failure mechanism was to validate each code on its own merits against operating experience.

NRC staff and contractors participated in the benchmarking activity, which Westinghouse staff documented in a recent paper presented at an ASME conference (Bishop 1997). This evaluation report summarizes the benchmarking procedures and (in part) the results of that effort.

A wide range of pipe sizes, material types, cyclic stress levels and frequencies, design limiting stresses, and leak detection capabilities were addressed by the calculations. While the present review describes some difficulties and issues encountered in comparing break probabilities for stainless steel piping when leak detection was included in the calculations, the present review agrees with the overall conclusion stated by Westinghouse that the calculations did successfully benchmark the calculations for the small leak, large leak, and full break probabilities..

As stated, the benchmarking calculations of the Westinghouse SRRA code against the pc-PRAISE code were limited to the mechanism of fatigue and more specifically, fatigue-related failures of piping associated with preexisting flaws in circumferential welds. The calculations excluded failures caused by service-related cracks initiated by fatigue. However, the range of cyclic stresses and cyclic frequencies was sufficiently broad to address low cycle fatigue attributable to normal plant transients, and high cycle fatigue caused by pipe vibrations or thermal fatigue conditions.

The benchmarking effort addressed concerns over the number of Monte-Carlo trials and importance sampling implemented within the Westinghouse SRRA code. Both aspects of the numerical approach were found acceptable. Results from the audit calculations led Westinghouse to increase the default number of Monte-Carlo simulations from the original value of 5000. In addition, the review established the correctness of the importance sampling approach, which in the Westinghouse SRRA code involves a shifting of distributions for the random variable in such a direction as to obtain a larger number of simulated failures. Default values for the number of shifting were judged to be modest, and unlikely to be a source of error in calculated failure probabilities. Sensitivity calculations by Westinghouse were performed to establish the amount of shifting which would degrade the accuracy of the calculated failure probabilities, and this level far exceeded the default parameters for shifting distributions.

The benchmark calculations generally showed good agreement in calculated failure probabilities. There were no areas of significant disagreement for probabilities of either small or large leaks over the full range of input parameters, which gave a very wide range of calculated

failure probabilities.

In a few cases, limited to certain calculations involving very low break probabilities, differences in calculated break probabilities amounting to several orders of magnitude were noted between results from the two codes. Calculations with the Westinghouse SRRA code gave higher break probabilities than predicted by pc-PRAISE. The pipe break probabilities were always sufficiently small so that the pipe segments would make only negligible contributions to the core damage frequency or categorization. No significant differences were observed for cases that neglected the effects of leak detection or where the piping material was ferritic steel versus stainless steel.

The benchmarking activity was concluded before all remaining differences in calculated break probabilities were resolved. As a result, some potential sources of numerical differences were not fully explored, including details of the importance sampling procedure, and the logic used to simulate the effects of leak detection. Westinghouse has put forward revised calculations that show relatively good agreement for all break probabilities.

It should be noted that there were significant differences in calculated failure probabilities for small leaks, large leaks, and pipe breaks during the first phase of the benchmarking calculations. It became clear that the codes themselves were not the source of the differences, but rather differences in the selection of numerical values for certain input parameters, which had not been adequately specified during the initial definition of the parameters for the benchmark problems. The most critical inputs were those for flaw density and size distributions, levels of vibrational fatigue stresses, and inputs for the simulation of leak detection.

Participants in the benchmarking efforts subsequently agreed to develop improved and standardized values for the critical inputs. Using results of calculations performed by Rolls Royce and Associates, the participants developed improved inputs for flaw size distributions. Inputs for vibrational stress levels were related to pipe sizes, resulting in reduced levels of vibrational stress for the largest pipe sizes. As a final step, the SRRA code was modified to simulate the effects of leak detection using a technique consistent with the state-of-the-art methodology used by the pc-PRAISE code. These changes resulted in good agreement between the two codes.

A.13.2 Validation with Operating Experience

A number of approaches can be used to validate calculated failure probabilities for consistency with plant operation experience. The documentation given in WCAP-14572, Revision 1, Supplement 1, provides two acceptable examples of such validation for the SRRA code. Both examples address failure mechanisms (FAC and IGSCC) for which there have been a sufficient number of field failures to provide data to permit benchmarking of calculated failure probabilities with observed failure rates. The staff found acceptable the agreement between predictions and operating experience for both failure mechanisms.

For most piping segments, calculations with the SRRA code have predicted relatively small values for failure probabilities. The results indicate that failures for such pipe segments would not be expected to occur for the limited number of years of plant operation accumulated to date. The SRRA code has therefore been shown to predict very low failure probabilities for those

failure mechanisms and piping locations which have exhibited a high level of operational reliability.

The predicted failure probabilities predicted by the SRRA code for the Surry Unit 1 plant have been reviewed from the standpoint of plant-wide trends. The net plant-wide calculated failure frequency (accounting for all pipe segments and all systems) indicates about one pipe leak per year for the entire plant, and a few pipe breaks over the 40-year operating life of the plant. These predictions of overall failure rates, predicted degradation mechanisms, and the most likely locations for piping failures show an acceptable level of agreement with plant operating experience. However, as noted above, most piping locations have experienced no failures or detectable degradation, and for these locations the operating experience provides no means to validate the correctness of the relative values of calculated failure probabilities. In this regard, the RI-ISI process is designed to provide feedback of future operating experience to permit refinement of the predictive models as appropriate.

A.14 Flaw Density and Size Distributions

Inputs for the number and sizes of welding-related fabrication flaws are a large source of uncertainty in performing probabilistic structural mechanics calculations. WCAP-14572, Revision 1, Supplement 1, indicates that the SRRA code uses acceptable inputs for flaw densities and size distributions. The inputs used with the SRRA code are those developed during the 1996 benchmarking activity. These inputs were derived on the basis of trends observed in calculations generated by Rolls Royce and Associates through application of the RR-Prodigal model to simulate flaws in typical nuclear piping welds.

While there remain uncertainties in the estimated absolute values of flaw densities, the technical basis of RR-Prodigal model helps to ensure consistency in the relative values for the number and sizes of flaws as a function of pipe material, welding practice, pipe wall thickness, and volume of weld metal. The 1996 modification of the SRRA code, which included the improved means for describing flaw distributions, significantly enhanced the ability of the SRRA code to predict reasonable values (consistent with data from operating experience) for the relative failure probabilities of large diameter piping versus small diameter piping.

A.15 Initiation of Service-Induced Flaws

The fatigue and stress corrosion cracking models in the SRRA code address only failures caused by preexisting fabrication-related flaws. Such flaws are an important contribution to piping failures, particularly when the service stresses are insufficient to cause cracking of initially un-flawed material. However, many service-related failures have been associated with severe cases of cyclic stress (e.g., thermal fatigue) or aggressive operating environments (e.g., stress corrosion cracking). In these cases service-induced flaws rather than preexisting flaws are the dominant contributor to piping failures.

The documentation provided in WCAP-14572, Revision 1, Supplement 1, appropriately acknowledges the limitations of the SRRA code, and suggests that other approaches may be needed to address failures due to service-induced flaws. These methods include the pc-

PRAISE code which offers the capability to simulate the initiation of stress corrosion cracks in stainless steel welds. In this regard, the diversity of experience represented by the expert panel reviews should ensure that appropriate computer codes and data bases are used to estimate failure probabilities.

In practice, as during the Surry Unit 1 pilot study, calculations with the SRRA code have approximated service-induced flaws by assuming that one flaw per weld initiates immediately upon the start of plant operation. The size of this flaw is described by the same distribution used to describe welding-related flaws. This model is an acceptable basis to calculate conservative or bounding values of failure probabilities. However, failure probabilities calculated using this approach must be used with caution, because the overly pessimistic predictions could result in assigning inappropriately high rankings to certain pipe segments at the expense of other components which could have larger contributions to risk.

A.16 Preservice Inspection

There are no simulations within the SRRA code to account for preservice inspections as a means to reduce the number of initial fabrication flaws. Effects of preservice inspections must be included indirectly through the inputs for flaw densities and size distributions. The staff finds the flaw distribution parameters described in WCAP-14572, Revision 1, Supplement 1, to be acceptable since they were derived from predictions by the RR-Prodigal flaw simulation model, which accounts for the effects of inspections performed after completion of welding. Using these input parameters, the calculations with the SRRA code have properly addressed the effects of preservice inspections.

A.17 Leak Detection

Consistent with the objective of calculating "best estimate" rather than conservative failure probabilities, the effect of leak detection in preventing catastrophic piping failures should be included in determining the change in CDF/LERF that lead to changes in the inspection program. The Westinghouse SRRA code includes a simulation of leak detection as an enhancement to the code made during the 1996 code benchmarking activity (It should be noted that for categorizing piping segments, leak detection is not normally credited, except for the reactor coolant system where redundant leak detection capabilities exist.). It is important that inputs to the SRRA code specify realistic values of detectable leak rates. This requires an understanding of the reliability of the techniques used to detect leaks in the various plant systems of interest.

The simplified leak rate model in the Westinghouse SRRA code is based on a correlation of calculated data on leak rates obtained from a more detailed model which is part of the pc-PRAISE code. This correlation provides an acceptable basis for addressing leak detection for the specific pressure and temperature conditions for the primary coolant loop of PWR plants having fatigue type cracks. The correlation accounts for effects of crack size, pipe stress, and internal pressure, and gives approximate predictions leak rates suitable for use in leak detection models. However, the correlation can give incorrect simulations of leak detection (due to over prediction of leak rates) for systems operating at the pressures and temperatures for BWR

plants that have IGSCC cracks with morphologies differing from those of fatigue cracks.

Before issuing this SER, the staff had identified an open item that Westinghouse should address the applicability of those correlations to other plant conditions. The staff also indicated that Westinghouse should clarify whether the SRRA code can be applied to BWRs and justify the applicability of the correlations used to calculate leak rates under BWR operating conditions. In the public meeting on September 22, 1998 [item 5 (d), Ref. 8], Westinghouse stated that the existing correlations for leak rates can be used for other plant conditions beyond the RCS and that the SRRA code can be applied to BWRs; however, care must be exercised in applying this approach to BWR piping systems, particularly those subjected to IGSCC. In addition, Westinghouse indicated that WCAP-14572 will be revised to provide guidance on addressing stress corrosion cracking. The staff finds the response acceptable since most piping susceptible to stress corrosion cracking (SCC) is also subject to fatigue loading, such as normal heat up and cool down, and the leak rate correlation for fatigue type cracks was conservatively assumed for the CLVSQ Program. The staff's approval is conditioned upon Westinghouse making the change to WCAP-14572 described above.

A.18 Proof Testing

The Westinghouse SRRA code does not explicitly address the potential benefits of preservice proof tests (e.g., pressurization tests) as a means to reduce piping failure probabilities. As such, the calculated failure probabilities are likely to be somewhat conservative. Components having very low failure probabilities are likely to be those most affected by proof testing (i.e., potential service failures are attributable to very deep cracks which can be discovered during proof testing).

Proof testing can be addressed indirectly by the SRRA code with a modification to the inputs for the number and sizes of initial fabrication flaws. The proof test serves to reduce the number of very large flaws.

Before issuing this SER, the staff had identified an open item that WOG should describe how proof testing is addressed in the SRRA calculations, and should clarify what impact its neglect would have on the calculated failure probabilities and categorization. In the public meeting on September 22, 1998 [item 14, Ref. 8], Westinghouse stated that the effect on the segment risk ranking and categorization would be very small and slightly conservative. Westinghouse also indicated that the next revision of WCAP-14572 will clarify that SRRA models in LEAKPROF do not take credit for eliminating large flaws, which would fail during the pre-service hydrostatic proof tests, even though this is allowed as an input option in pc-PRAISE. The staff concludes that the approach for addressing proof testing is acceptable because Westinghouse has demonstrated that the effect of proof testing on the segment risk ranking and categorization would be very small and slightly conservative. The staff's approval is conditioned upon Westinghouse making the change to WCAP-14572 described above.

A.19 Inservice Inspection

The Westinghouse SRRA code can simulate the reduction in piping failures resulting from ISI.

However, the methodology described in WCAP-14572, Supplement 1, assumes no inservice inspection for purposes of establishing risk importance measures, but does credit inservice inspection in calculating the change in CDF/LERF that results in changes to the ISI program.

Inservice inspections are simulated by the SRRA code following an approach which is similar but not identical to the pc-PRAISE code. In most cases, the approach should give acceptable predictions of the effects of inspections. Nevertheless, due care must be taken to avoid overly optimistic evaluations. Before issuing this SER, the staff had identified an open item that the probability of detection curves used in calculations need to be justified for the material type, inspection method, component geometry, and degradation mechanism that apply to the structural location being addressed. In the public meeting on September 22, 1998 [item 15 (a), Ref. 8], Westinghouse stated that the default input values for the probability of detection (POD) curves are consistent with the default input values for pc-PRAISE. The revised WCAP will emphasize that the SRRA code user must ensure that the specified input values for POD are appropriate for the type of material, inspection method, component geometry, and degradation mechanism being evaluated. The staff finds this response acceptable since (POD curves are consistent with the default input values for pc-PRAISE code which has been validated and accepted by the staff for various applications. The staff's approval is conditioned upon Westinghouse making the change to WCAP-14572 described above. In addition, the detection probabilities used in SRRA calculations should be justified and documented as part of plant specific submittals.

A.20 Service Environment

Service environments (characterized by pressure, temperature, water chemistry, flow velocity, etc.) can affect corrosion rates and crack growth rates. These effects must be addressed on a segment-by-segment basis in probabilistic structural mechanics model since the classification of high-safety-significance and low-safety-significance is based on a segment-by-segment basis.

The SRRA code allows the effects of service environment to be included in calculations of piping failure probabilities. For the failure mechanism of fatigue crack growth, the equations for predicting crack growth rates are appropriate since they have been derived on the basis of tests performed with specimens exposed to reactor water environments.

Crack growth rates (for stress corrosion cracking) and wall thinning rates (for flow-assisted corrosion) can be specified by the inputs in a manner that includes appropriate effects of operating environments. Crack growth rates are appropriate since the SRRA code has incorporated bounding rates for these two degradation mechanisms, bounding rates are founded on laboratory data and service experience corresponding to high failure probabilities, and the user should specify numerical factors to be applied to these bounding rates, with the assigned factors derived from plant operating experience and engineering judgement.

In summary, the SRRA code provides an acceptable method to account for the effects of the operating environment since the method is largely reliant on qualitative judgments to indirectly assign quantitative factors. This is appropriate since typical calculations must often be performed without detailed knowledge of such factors as water chemistries and flow velocities and the documentation for the code acknowledges limitations of the approximate methodology

and recommends other methods for use as needed.

A.21 Fatigue Crack Growth Rates

The equations used by the Westinghouse SRRA code to predict fatigue crack growth rates in both stainless and ferritic steels are the same equations used by the pc-PRAISE code. These equations represent the best available correlations for the statistical distributions of mean crack growth rates and for crack growth. On the basis of this review, the staff concludes that the SRRA code has an acceptable basis for simulating fatigue crack growth rates.

A.22 IGSCC Crack Growth Rates

The equations used in SRRA to relate crack tip stress intensity factors to growth rates for stress corrosion cracks are consistent with NRC staff evaluations of BWR piping performed in the 1980s. These equations provide an acceptable approach to predict bounding growth rates for sensitized stainless steel welds in BWR water environments.

The equations implemented in the SRRA code do not provide a mechanistic basis to address stress corrosion cracking under less aggressive conditions. Limitations of the equations are acknowledged in the code documentation provided in WCAP-14572, Revision 1, Supplement 1. A code user is guided to apply knowledge of the materials/welding variables and of the plant operating conditions in combination with engineering judgement to estimate crack growth rates relative to the bounding rates incorporated into the SRRA code. The user is also guided in this difficult task with the option to assign a high, medium, or low category for the crack growth rates. With this option the code internally assigns the numerical parameter which is applied as a multiplying factor to the bounding crack growth rates.

A.23 Wall Thinning Rates

The Westinghouse SRRA code estimates wall thinning rates using a statistical correlation (mean of 0.0095 inch per year and standard deviation of 0.893 inch per year) of field measurements of thinning rates from piping subject to flow-assisted corrosion. These measured rates were from selected piping locations which had sufficient wall thinning to violate minimum wall thickness requirements and thus result in replacement of the piping.

The user of the code must apply knowledge of the piping materials, operating conditions, and (if possible) plant-specific measurements of thinning rates to assign each pipe location to the categories of high, medium, and low thinning rates. The high category corresponds to the statistical data correlation contained in the code, with the other categories corresponding to internally assigned multiples of this reference thinning rate.

Plant technical staff will typically have data available from existing programs for augmented inspection and the management of wall thinning for piping systems at their plants. In these cases, the user can override the parameters corresponding to the three standard categories,

and directly assign input to describe the best estimate and uncertainty in the thinning rates. These assignments can be based on location specific wall thickness measurements, predictions of thinning rates such as by the CHECKWORKS code, or can be based on other sources of knowledge and/or engineering judgement.

With proper inputs, the code provides a useful tool to assist in estimating piping failure probabilities attributable to wall thinning. Before issuing this SER, the staff had identified an open item that Westinghouse should expand the code documentation to provide additional guidance for selecting the input for the calculation. In the public meeting on September 22, 1998 [item 15(b), Ref. 8], Westinghouse stated that the next Revision of WCAP-14572, Supplement 1, will provide detailed guidelines for simplified input variables and any associated assumptions that could be important in assigning the input values for the SRRA code. WCAP-14572 will also state that if more than one degradation mechanism is present in a given segment, the limiting input values for each mechanism should be combined so that a limiting failure probability is calculated for risk ranking. The staff finds the guidance in item 15(b), Ref. 8 to be acceptable because it provides sufficient guidance for the code user for selecting input parameters. The staff's approval is conditioned upon Westinghouse making the change to WCAP-14572 described above.

A.24 Material Property Variability

Variability and uncertainties in certain material properties have a large influence on calculated failure probabilities. Nonetheless it is appropriate for probabilistic structural mechanics codes to treat some material properties as deterministic, while the variability and uncertainty in other properties must be simulated in the probabilistic model. Experience has shown that it is critical to treat the material input parameters associated with crack growth rates, fracture toughness, and strength levels as random variables.

The SRRA code treats probabilistically the important parameters which describe material properties. The staff finds that the code provides an acceptable basis to account for uncertainties in material-related characteristics since the code documentation clearly indicates which material properties are treated in a probabilistic manner and which parameters are treated as deterministic inputs.

A.25 SUMMARY AND CONCLUSIONS

This review concludes that the Westinghouse SRRA code provides an acceptable method that can be used, in combination with trends from data bases and insights from plant operating experience, for estimating piping failure probabilities. The underlying deterministic models used by the code are based on sound engineering principles and make use of inputs which are within the knowledge base of experts that will apply the code. Effects of variability and uncertainties in code inputs are simulated in a reasonable manner. The documentation for the SRRA computer code shows examples where the code has been benchmarked against other computer codes and validated with service experience.

While the SRRA code can be applied as a useful tool for estimating piping failure probabilities,

the present review has identified a number of limitations in the types of calculations that can be performed by the code. Some of the concerns which users of the code must be aware include:

- The quality and usefulness of results from the SRRA code are very dependent on the quality of inputs provided to the code. It is important that users of SRRA be adequately trained in the features and limitations of the code, and have the access to detailed information of the plant specific piping systems being modeled.

- The results of SRRA calculations should always be reviewed to ensure that they are reasonable and consistent with plant operating experience. Data from plant operation should be used to review and refine inputs to calculations. In all cases, greater confidence should be placed in relative values of calculate failure probabilities than on absolute values of these probabilities.

- The stresses used for plant specific applications should be based on actual plant experience and operational practices (including thermal and vibrational fatigue stresses), which may differ from the stresses used for purposes of the original design of the plant.

- The present review describes some numerical difficulties and issues encountered in comparing break probabilities for the fatigue of stainless steel piping when leak detection was included in the calculations. Nevertheless, the present review agrees with the overall conclusion as stated by Westinghouse, that the calculations did successfully benchmark the calculations for the small leak, large leak, and full break probabilities.

- The simplified nature of the SRRA code has resulted in a number of conservative assumptions and inputs being used in applications of the code. It is therefore recommended that sensitivity calculations be performed to ensure that excessive conservatism does not unrealistically impact the categorization and selection of piping locations to be inspected.

- The model of piping fatigue and stress corrosion cracking by the SRRA code addresses only failures due to the growth of preexisting fabrication flaws and does not address service induced initiation of cracks. Given plant operating experience which shows that piping failures by fatigue and IGSCC are very often due to initiated cracks, the prediction of failure probabilities for these degradation mechanisms will often be better addressed by other methods and/or other computer codes, such as pc-PRAISE

- The SRRA model for flow assisted corrosion and wastage only addresses the variability in wall thinning rates, and assumes that the user has a basis for assigning values for expected or nominal thinning rates. Application of the SRRA model should be made within the context of existing plant programs for the inspection and management of wall thinning of piping systems. The SRRA code can be applied most effectively if there are means to estimate the thinning rates, based, for example, on data collected from wall thinning measurements or from predictions of computer codes such as the EPRI developed code CHECKWORKS.

- The pilot applications of the SRRA code to risk-informed ISI as described in WCAP-14572 represent a new and evolving application of the probabilistic structural mechanics technology. Lessons learned from the pilot applications and consideration of the code limitations as identified in the present review should be used to guide the future development and

enhancement the SRRA code.

A.26 REFERENCES for APPENDIX A

Bishop. B.A., "An Updated Structural Reliability Model for Piping Risk-informed ISI," ASME PVP Vol. 346, pp. 245-252, *Fatigue and Fracture - Volume 2, 1997.*

Chexal, B, et al., "*CHECWORKS Computer Program User Guide*, Report TR-103496, EPRI, December 1993.

Harris, D.O., and D. Dedhia, "*Theoretical and Users Manual for pc-PRAISE, a Probabilistic Fracture Mechanics Computer Code for Piping Reliability Analysis,*" NUREG/CR-5864, U.S. Nuclear Regulatory Commission, Washington, D.C., 1991.

Hazelton, W.S., and W.H. Koo, "*Technical Report on Material Selection and Processing Guidelines for BWR Coolant Pressure Boundary Piping,*" NUREG-0313, Revision 2, U.S. Nuclear Regulatory Commission Report, 1988.

Khaleel, M.A., and F. A. Simonen, "Effects of Through-Wall Bending Stresses on Piping Failure Probabilities," ASME PVP, Vol. 346, pp. 217-224, *Fatigue and Fracture - Volume 2*, 1997.

FOREWORD

This topical report on risk-informed inservice inspection (RI-ISI) methods for piping has been revised based on: 1) interactions with the Nuclear Regulatory Commission (NRC); 2) the methodology enhancements made as a result of the application of the WOG methodology to the Virginia Power Surry Unit 1; 3) the enhancements made to the WOG process as a result of benchmarking efforts between the WOG and the NRC and their contractors during the Surry pilot application via American Society of Mechanical Engineers (ASME) Research; and 4) the consideration of the key elements stated in the NRC's regulatory guides and standard review plans for risk-informed decision-making.

In addition, a supplement has been developed that provides detailed information on the structural reliability and risk assessment (SRRA) model. This model is applied to assist in the estimation of piping failure probabilities that are a key component in the risk-informed ISI process.

EXECUTIVE SUMMARY

Inservice inspections are intended to play a key role in minimizing structural failures. The objective of inservice inspection (ISI) is to identify conditions, such as flaw indications, that are precursors to leaks and ruptures, which violate pressure boundary integrity principles for plant safety. All aspects of inspection, including where, when, and how to inspect, affect the benefits of the inspection for enhancing component structural reliability. In addition, accept/reject criteria and repair procedures have a significant influence. Inspections are currently performed based on mandated requirements, such as those for nuclear power plant components in the ASME Boiler and Pressure Vessel Code, insurance requirements, company policy, etc. Most inspection requirements are based on past experience and engineering judgment and have only an implicit consideration of risk-based information, such as failure probability and consequence impacts for the specific material, operation and loading conditions.

Technologies for risk assessment of systems and components have been developing rapidly over the past two decades concurrently with progress in inspection technology and methods for assessment of component structural reliability and the effects of inspection. In fact, all nuclear power plants have been required to perform an Individual Plant Examination (IPE) per the requirements of NRC Generic Letter 88-20 to determine plant vulnerabilities to severe accidents such as core damage and large early release from containment. These developments provide the capability of selecting between candidate inspection programs based on quantitative estimates of the risks associated with component failure, including related inspection and failure costs. Both the probability and the consequence of component failure enter into the evaluation of risk, and inspection programs can be formulated based on managing these risks and related costs.

This report describes a program for showing the benefits of using risk-informed technologies to reduce overall operation and maintenance costs associated with the inspection of nuclear power plant components while maintaining a high level of safety. Risk-informed inspection processes were applied to evaluate the impact of requirements and methods currently being developed for component/system inspection on overall operation and maintenance costs.

The focus of this report is on the identification of the inspection locations using a RI-ISI process. The goal of this application is to provide a process for selecting inspection locations based on a combination of safety significance and failure potential in support of an inspection for cause philosophy. A 2x2 matrix of piping failure importance versus safety significance is used to

properly categorize the various piping segments (see Figure 3.7-1) to assist in the selection of piping structural elements for examination.

The WOG risk-informed ISI process (as shown in Figure 3.1-2) that is applied to identify the locations for examination includes the following steps:

- Scope Definition
- Segment Definition
- Consequence Evaluation
- Failure Probability Estimation
- ISI Segment Selection
- Structural Element Selection
- Inspection Requirements

Section 3 of the report describes the details of this methodology, and Section 5 outlines the steps of how to apply the risk-informed ISI process to a specific plant for piping. The WOG risk-informed ISI process meets the key steps and principles of the NRC framework that has just been established for risk-informed, plant-specific decision-making. The risk-informed inspection program requirements can be implemented and monitored within the framework of the ASME Boiler and Pressure Vessel Code Section XI.

An earlier version of the above process had been applied to Millstone Unit 3, a plant designed to ASME Section III requirements, as a reference plant study and this work was reported in the original version of this Topical Report. The process has since been enhanced through benchmarking efforts in a WOG pilot application at Surry Unit 1, a pre-ASME Section III plant design, as reported in this revision of the Topical Report. While the process has been significantly enhanced to meet NRC regulatory guidance on use of probabilistic risk assessment to improve safety decisionmaking, both of these plant application studies yield consistent results.

After application of the risk evaluation process, including plant expert panel review, 96 pipe segments were shown to be high safety-significant at Millstone-3 and 117 pipe segments are shown to be in this category for Surry-1. In comparing the recommended piping structural elements to be inspected by non-destructive examination (NDE) in the risk-informed ISI program compared to current ASME Section XI locations, a greater portion of the risk associated with piping pressure boundary failures can be addressed with the risk-informed

program with far fewer examinations being required. At Millstone-3, the risk-informed program recommends 107 NDE examinations versus 753 ASME Section XI required exams, and for Surry-1, 137 NDE exams are suggested versus the 385 required by the ASME Code. Both studies show that examinations can be significantly reduced within the reactor coolant system, and examinations should be reallocated and added to other Class 2 and Class 3 systems, such as service water, auxiliary feedwater, and several others related to the specific plant design. At Surry-1, 12 NDE exams are even recommended in the non-Code class portions of three systems. A significant reduction in radiation exposure is also shown for both units with approximately 60-75 REM being saved each 10-year inspection interval.

This significant reduction in the number of examinations can be achieved while showing a risk reduction in total piping pressure boundary risk in terms of both core damage frequency and large, early release frequency, as demonstrated in detailed calculations performed for Surry-1. Even considering the impact of potential operator actions to recover from piping failure events does not change this positive result. In order to meet defense-in-depth principles and to maintain sufficient safety margins, some current reactor coolant loop piping examinations are kept in place and additional examinations are recommended in 10 low safety-significant segments at Surry-1 to maintain a risk neutral position in the front-line systems, such as containment spray and low head/high head safety injection, and also to reduce the risk in systems that are dominant contributors to the total piping pressure boundary risk. A statistical model has also been developed and applied to define the minimum number of locations to be examined to insure that an acceptable level of reliability is achieved, consistent with current industry experience, throughout the key piping segments of interest.

Implementation of risk-informed ISI programs using the process and methods provided in this WOG Topical Report will yield significant benefits in terms of enhanced safety, reduced radiation exposure, and reduced cost for nuclear plant piping programs. The studies have been independently performed for both plant applications and show that risk-informed ISI programs have the potential to be implemented at a cost that can be returned in one to two years following implementation, depending on the size and age of the unit. Given that aging effects are directly evaluated in the process using a structural reliability/risk assessment tool, use of this technology for defining aging management programs and the associated inspection of piping systems as part of license renewal programs could yield additional significant benefits.

ACKNOWLEDGEMENTS

The authors acknowledge with appreciation those utility representatives and other personnel who assisted in providing information for this document by participating in interviews, responding to questions on the information provided, and providing reviews.

In particular, the authors acknowledge the Northeast Utilities and Millstone 3 plant staff who graciously served as the representative WOG plant, the Virginia Power and Surry plant staff who graciously served as the WOG industry pilot, and the members of the ASME Risk-Based Inservice Inspection Research Task Force, who assisted in the development of the enhanced methodology for this program.

Utility/Industry Group	Representative
Northeast Utilities	Sunil D. Weerakkody, Alan J. Silvia, Robert V. Schonenberg, Steven Sikorski, Robert C. Enoch, Huby K. Covin, David T. McDaniels, Bruce R. Roy, Maria G. Gharakhanian, Paul J. Parulis, Mark A. Powers, Ronald W. Rothgeb, Robert W. Flanagan
Virginia Power	E. W. Throckmorton, W. M. Oppenheimer, L. C. Martin, D. L. Rogers, R. S. Thomas, J. J. Simpson, J. C. Paul, S. W. Semmes, G. W. Thompson, D. R. Dodson
ASME Research Task Force on Risk-Based ISI	Jerry Phillips (TENERA), Truong Vo (PNNL), Vic Chapman (Rolls-Royce), Fred Simonen (PNNL), David Harris (Engineering Mechanics Technology), Ray Art (ASME Research), Bryan Gore (PNNL), Lee Abramson (NRC Research), Spencer Bush (Consultant), James Agold (SNC)
Westinghouse Owners Group	Dennis Weakland (DQE), Chuck Tomes (WPSC), Larry Matthews (SNC), T. R. Satyan-Sharma (AEP)
Westinghouse	Warren Bamford, Dave Drinon, Terry Miele, Don Remlinger, Ed Terek, John Kitzmiller, Howard Ott, Bill McAllister, Jim Thomas, Johnna Chicots, Paul Stevenson, C. Y. Yang, T. P. O'Donnell (Consultant), Tom Senkewitz, Jr., Melita Osborne, Ted Meyer, Charlie Meyer

The authors also acknowledge the assistance of Cyndy Guzewicz and Cindy Olesky of Westinghouse in preparing this Topical Report.

TABLE OF CONTENTS

TABLE OF CONTENTS (cont.)

TABLE OF CONTENTS (cont.)

LIST OF TABLES

LIST OF TABLES (cont.)

LIST OF TABLES (cont.)

LIST OF FIGURES

LIST OF FIGURES (cont.)

SECTION 1
INTRODUCTION

Inservice inspections are intended to play a key role in minimizing structural failures. The objective of inservice inspection (ISI) is to identify conditions, such as flaw indications, that are precursors to leaks and ruptures, which violate pressure boundary integrity principles for plant safety. All aspects of inspection, including where, when, and how to inspect, affect the benefits of the inspection for enhancing component structural reliability. In addition, accept/reject criteria and repair procedures have a significant influence. Inspections are currently performed based on mandated requirements, such as those for nuclear power plant components in the ASME Boiler and Pressure Vessel Code (BPVC), insurance requirements, company policy, etc. Most inspection requirements are based on past experience and engineering judgment and have only an implicit consideration of risk-based information, such as failure probability and consequence impacts for the specific material, operation and loading conditions.

Technologies for risk assessment of systems and components have been developing rapidly over the past two decades concurrently with progress in inspection technology and methods for assessment of component structural reliability and the effects of inspection. In fact, all nuclear power plants have been required to perform an Individual Plant Examination (IPE) per the requirements of NRC Generic Letter 88-20 (NRC 1988) to determine plant vulnerabilities to severe accidents such as core damage and large early release from containment. These developments provide the capability of selecting between candidate inspection programs based on quantitative estimates of the risks associated with component failure, including related inspection and failure costs. Both the probability and the consequence of component failure enter into the evaluation of risk, and inspection programs can be formulated based on managing these risks and related costs.

This project demonstrates the benefits of using risk-informed technologies to reduce overall operation and maintenance costs associated with the inspection of nuclear power plant components while maintaining a high level of safety. Risk-informed inspection processes were applied to evaluate the impact of requirements and methods, currently being developed for component/system inspection, on overall operation and maintenance costs.

While the quantitative methodology for RI-ISI described in this report has been developed by the WOG with assistance from ASME Research and applied to pressurized water reactors (PWR) with a Westinghouse nuclear steam supply system (NSSS), it is applicable to other vendor designs, including boiling water reactors (BWR). The methodology should be directly applicable to other PWR NSSS designs for either full or partial scope (e.g. ASME Class 1 piping only) applications. However, care must be exercised in applying this approach to BWR piping systems, particularly those subjected to intergranular stress corrosion cracking (IGSCC) where several mitigative actions and repairs have been implemented.

1.1 PROGRAM OBJECTIVENESS/SUMMARY OF REGULATORY REQUIREMENTS AND COMPLIANCE

The primary objective of this program is to apply and document the risk-informed inservice inspection process as an alternative for selecting and categorizing piping components into high safety-significant and low safety-significant groups for purposes of meeting ASME BPVC Section XI Inservice Inspection (ISI) requirements.

The supporting objectives of this program are to:

- Apply new methodologies to better utilize and focus utility and supporting organization resources
- Minimize man-rem exposure
- Maintain or enhance plant safety and reliability, and
- Integrate with other risk-informed applications.

An additional objective is to apply this process to determine the impact on the piping ISI program of a nuclear plant operated through a license renewal period. Results from additional studies currently planned by the WOG to address this impact are expected to be available in the near future and therefore are not included in this report.

Current Regulatory Requirements for ISI Programs

The ASME Section XI Code contains the requirements for inservice examination of nuclear power plant piping. The scope covers Class 1, 2, and 3 piping. These requirements are endorsed by the NRC through regulation in 10 CFR 50.55a(g).

ASME Section XI Categories B-F, B-J, C-F-1 and C-F-2 currently contain the requirements for examination of piping components by NDE. The current NDE program is limited to ASME Class 1 and Class 2 piping. There is no current NDE examination program for ASME Class 3 or nonclass piping components per ASME Section XI.

When an individual utility chooses an alternative process and submits a request to the NRC, the aspects of the plant's licensing basis that would be affected by the proposed change should be identified.

Changes in Regulatory Compliance Using Risk-Informed ISI

Specifically for risk-informed ISI, changes in the regulatory compliance includes:

- Identification of the changes to the current ASME Section XI program for piping, including methods, frequencies and level of qualification (equipment and personnel) required

- Identification of any NRC-granted relief requests that are still applicable and those that may now be void

- Identification of any NRC-approved ASME Code Cases that are still applicable and those that may now be void

- Identification of any changes to any owner-defined inspection programs committed to in response to NRC bulletins, generic letters and enforcement actions, as well as licensee commitments documented in NRC safety evaluations or licensee event reports

- Identification of any changes to the monitoring or corrective action programs or reporting requirements for inservice inspection of piping.

This report documents an alternative to the current ASME Section XI program for piping. The risk-informed ISI program will be substituted for the current examination program on piping. Additionally, the alternative program will not be limited to ASME Class 1 or Class 2 piping but will now encompass the high safety significant piping segments identified through the process regardless of ASME Class. This report provides an alternative inspection location selection method for NDE and does not affect current Owner- defined augmented programs. Other unrelated portions of the ASME Section XI Code will not be affected. This report describes the recommended changes to the piping systems examined, the changes to the current examination method, and recommended changes to the monitoring, corrective action and reporting requirements.

1.2 PROGRAM BENEFITS

Risk-informed processes are used to improve the effectiveness of inspection of components; to enhance inspection strategies in some areas by inspecting for cause and reduce inspection requirements in others; to evaluate improvements to plant availability and enhanced safety measures; and to reduce overall operation and maintenance (O&M) costs while maintaining regulatory compliance and maintaining or enhancing the plant safety. The program focuses inspection resources on high safety-significant piping locations and locations where failure mechanisms are likely to be present thus enhancing overall safety. Risk-informed ISI programs offer the potential to reduce outage times by defining a smaller set of high safety-significant components that must be addressed as part of critical paths and by defining more effective inspection programs to reduce the impact on plant outages.

Longer term benefits include knowledge of the safety versus economic benefits of inspection and the cost savings and enhanced safety resulting from the risk-informed optimization of the locations that require inspection during each 10 year ISI interval. Additional cost savings and improved plant reliability and safety may be realized from the elimination of unplanned outages caused by ineffective inspection strategies that miss potential degradation that could lead to piping failures during plant operation.

1.3 PROGRAM TASKS

This program includes risk-ranking of piping locations to determine the high safety-significant locations to focus the inspection efforts. It also includes the evaluation of various inspection strategies and providing recommendations on the appropriate inspection strategy for a given piping type and postulated failure mechanism.

1.4 REPORT INTENT, ORGANIZATION AND RELATIONSHIP TO REGULATORY GUIDE RG-1.174

This report is intended to be a submittal to the NRC that documents the methodology and application for general use of the risk-informed piping ISI methodology supported by plant applications. The descriptions and information contained in this report are believed to be sufficient to:

- Satisfy the principle elements of risk-informed, plant specific decision making. This includes the definition of changes made in compliance with pertinent regulatory requirements, performance of engineering analysis and definition of the implementation of a risk-informed piping ISI program.

- Satisfy the safety principles of risk-informed regulation. This includes descriptions of compliance with regulatory requirements, maintenance of the defense-in-depth design philosophy, maintenance of safety margins, description of specific ISI implementation and monitoring activities and demonstration of acceptable risk.

Section 1 of this report provides an overview of the objectives, regulatory requirements, benefits and tasks of the program. Section 2 provides the background as to why research and applications of risk-informed technology for inservice inspection are being performed and identifies other industry factors that potentially impact this program. Section 3 describes the process, results and insights gained from the application. Section 4 provides inspection program requirements, including guidance on inspection methods, program monitoring, reporting requirements, and corrective action programs and compares the risk-informed results with the current ASME Section XI inspection locations. Section 5 describes the process to be

applied on a plant-specific basis while Section 6 summarizes the findings and recommendations for the application.

Relationship to NRC Regulatory Guide RG-1.174

The NRC issued the following guidance (regulatory guides (RG) and standard review plans (SRP)) to support risk-informed regulation in 1998:

- Regulatory guide RG-1.174, "An Approach for Using Probabilistic Risk Assessment in Risk-Informed Decisions on Plant-Specific Changes to the Licensing Basis," and its companion SRP, Chapter 19,

- Regulatory guide RG-1.175, "An Approach for Plant-Specific, Risk-Informed, Decision Making: Inservice Testing" and its companion SRP, Chapter 3.9.7,

- Regulatory guide RG-1.176, "An Approach for Plant-Specific, Risk-Informed, Decision Making: Graded Quality Assurance," and

- Regulatory guide RG 1.177, "An Approach for Plant-Specific, Risk-Informed, Decision Making: Technical Specifications" and its companion SRP, Chapter 16.1.

The regulatory guide (RG) and standard review plan (SRP) for risk-informed inservice inspection were not available when Revision 1 of WCAP-14572 was prepared. A trial use regulatory guide and SRP for risk-informed ISI (RG-1.178 and SRP, Chapter 3.9.8) were issued in October 1998.

The RGs/SRPs describe an approach that, according to SECY 97-077 (NRC, 1997), "preserves existing fundamental principles of reactor safety" (such as the defense-in-depth philosophy), includes an integrated review of the safety implications of proposed changes to a plant's licensing basis (including where safety improvement, as well as burden reduction, are appropriate), and ensures protection of public health and safety. Accordingly, in the long term, it is expected that the application of this approach will result in improved reactor safety, not just burden reduction. In addition, in the longer term the approach and guidelines proposed in the

RG/SRPs could provide the foundation for the application of risk insights in other regulatory activities (i.e., both plant specific and generic actions)."

SECY 97-077 further states:

> "Since this guidance supports implementation of a policy statement, it is by its very nature voluntary for licensees and is not considered a backfit. However, to encourage their use, the staff intends to give priority to applications for burden reduction that use risk information as a supplement to traditional engineering analyses. All applications that improve safety will continue to receive high priority."

The guidelines proposed "would permit only small increases in risk and then only when it is reasonably assured, among other things, that sufficient defense in depth and safety margins are maintained. This practice is proposed because of the uncertainties in PRA and to account for the fact that safety issues continue to emerge regarding design, construction, and operational matters notwithstanding the maturity of the nuclear power industry. In addition, limiting risk increases to small values is considered prudent until such time as experience is obtained with the methods and applications discussed in the proposed RGs/SRPs..."

According to SECY 97-077, key principles represent fundamental safety practices which the staff believes must be retained in any change to a plant's licensing basis to maintain reasonable assurance that there is no undue risk to public health and safety. Each of these principles is to be considered in the integrated engineering analysis and decision making process.

The approach described in each of the RGs/SRPs has four basic elements shown in Figure 1.4-1.

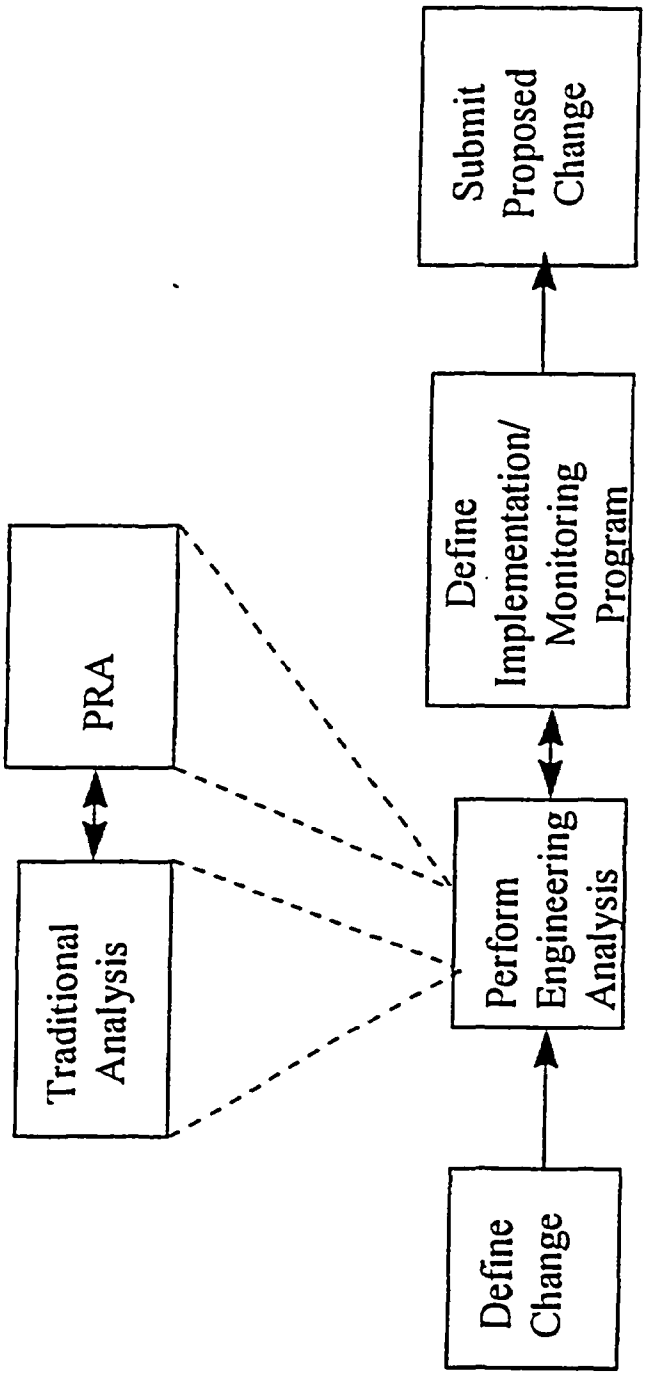

Figure 1.4-1 Principal Elements of Risk-Informed, Plant-Specific Decisionmaking (from NRC regulatory guide 1.174)

The four basic elements are:

1. Define the proposed change

   This element includes identifying 1) those aspects of the plant's licensing bases that may be affected by the change; 2) all systems, structures and components (SSCs), procedures and activities that are covered by the change and consider the original reasons for inclusion of each program requirement; and 3) any engineering studies, methods, codes, applicable plant-specific and industry data and operational experience, PRA findings, and research and analysis results relevant to the proposed change.

2. Perform engineering analysis

   This element includes performing the evaluation to show that the fundamental safety principles on which the plant design was based are not compromised (defense-in-depth attributes are maintained) and that sufficient safety margins are maintained. The engineering analysis includes both traditional deterministic analysis in addition to probabilistic risk assessment. The evaluation of risk impact should also assess the expected change in core damage frequency and large early release frequency, including a treatment of uncertainties. The results from the traditional analysis and the probabilistic risk assessment must be considered in an integrated manner when making a decision.

3. Define implementation and monitoring program

   This element's goal is to assess SSC performance under the proposed change by establishing performance monitoring strategies to confirm assumptions and analyses that were conducted to justify the change. This is to ensure that no unexpected adverse safety degradation occurs because of the changes. Decisions concerning implementation of changes should be made in light of the uncertainty associated with the results of the evaluation. A monitoring program should have: measurable parameters, objective criteria, and parameters that provide an early indication of problems before becoming a safety concern. In addition, the monitoring program should include a cause determination and corrective action plan.

4. Submit proposed change

   This element includes: 1) carefully reviewing the proposed change in order to determine the appropriate form of the change request; 2) assuring that information required by the relevant regulation(s) in support of the request is developed; and 3) preparing and submitting the request in accordance with relevant procedural requirements.

Five fundamental safety principles are described which each application for a change in the licensing basis should meet. These are shown in Figure 1.4-2.

The principles are:

1. The proposed change meets the current regulations unless it is explicitly related to a requested exemption or rule

   The proposed change is evaluated against the current regulations (including the general design criteria) to either identify where changes are proposed to the current regulations (e.g., technical specification, license conditions and FSAR) or where additional information may be required to meet the current regulations.

2. Change is consistent with defense-in-depth philosophy

   Defense-in-depth has traditionally been applied in reactor design and operation to provide a multiple means to accomplish safety functions and prevent the release of radioactive material. As defined in the regulatory guide RG-1.174, defense-in-depth is maintained by assuring that:

   - a reasonable balance among prevention of core damage, prevention of containment failure, and consequence mitigation is preserved
   - over-reliance on programmatic activities to compensate for weakness in plant design is avoided
   - system redundancy, independence, and diversity are preserved commensurate with the expected frequency and consequences to the system (e.g., no risk outliers)

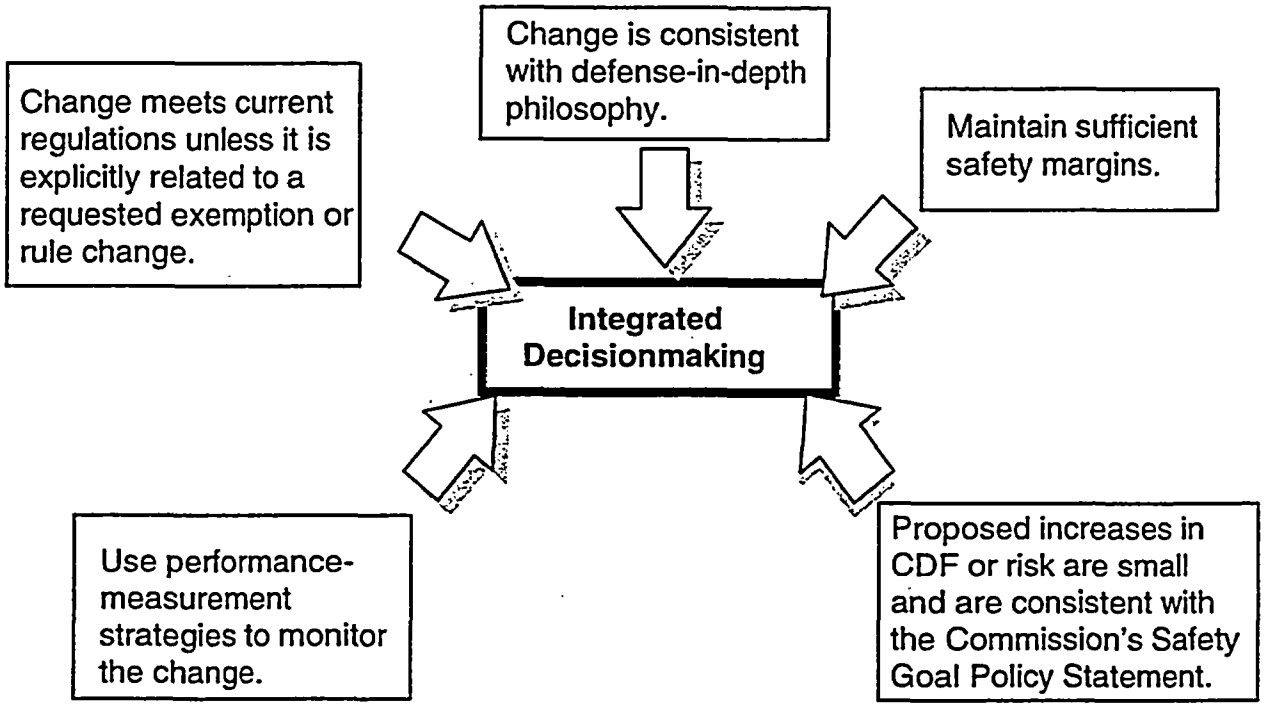

(from NRC regulatory guide RG-1.174)

Figure 1.4-2 Principles of Risk-Informed Regulation (from NRC regulatory guide 1.174)

- defenses against potential common cause failures are preserved and the potential for introduction of new common cause failure mechanisms is assessed
- independence of barriers is not degraded (the barriers are identified as the fuel cladding, reactor coolant pressure boundary, and containment structure)
- defenses against human errors are preserved.

3. Maintain sufficient safety margins.

   Safety margins must also be maintained. As described in regulatory guide RG-1.174, sufficient safety margins are maintained by assuring that:

   - codes and standards or alternatives proposed for use by the NRC are met or deviations are justified
   - safety analysis acceptance criteria in the CLB (e.g, FSAR, supporting analysis) are met, or proposed revisions provide sufficient margin to account for analysis and data uncertainty

4. Proposed increases in CDF or risk, are small and are consistent with the Commission's Safety Goal Policy Statement.

   To evaluate the proposed change with regard to a possible increase in risk, the risk assessment should be of sufficient quality to evaluate the change. The expected change in core damage frequency (CDF) and large early release frequency (LERF) are evaluated to address this principle. An assessment of the uncertainties associated with the evaluation is also conducted. Additional qualitative assessments are also performed.

5. Use performance-measurement strategies to monitor the change.

   Performance-based implementation and monitoring strategies are also addressed as part of the key elements of the evaluation as described previously.

These key elements and principles are addressed in the report as identified in Table 1.4-1. A short discussion of how these key elements and principles are met is also provided.

Table 1.4-1 RELATION OF WCAP TO NRC REGULATORY GUIDE RG-1.174 STEPS AND PRINCIPLES		
Key Steps/Principle	WCAP Section	Comments
Key Step		
Define the proposed change	1.1	The proposed change applies to Class 1, 2, and 3 systems currently in the scope of ASME Section XI, systems identified through the plant PSA, or systems identified through the Maintenance Rule application. It provides an alternative inspection location selection method for NDE and does not affect current Owner-defined augmented programs.
Perform engineering analysis	3	Probabilistic and deterministic engineering analyses are performed and integrated through the use of a plant expert panel in the decision making to define the high and low safety significant segments. Engineering inputs are used to select the inspection locations and methods and a statistical model is used to determine how many locations must be inspected to meet certain confidence and reliability goals.
Define implementation and monitoring program	4	Implementation is done consistent with the requirements of the ASME Code Section XI. A monitoring, feedback and corrective action program is discussed.
Submit proposed change	1.1	Each licensee that follows the process and methods outlined in this topical will submit their proposed change at the time they perform a risk-informed ISI program.

Table 1.4-1 (cont.) RELATION OF WCAP TO NRC REGULATORY GUIDE RG-1.174 STEPS AND PRINCIPLES		
Key Steps/Principle	WCAP Section	Comments
Key principles		
The proposed change meets the current regulations unless it is explicitly related to a requested exemption or rule change	1.1	The proposed change is an alternative to the ASME Section XI Code as referenced by 10CFR 50.55a(a)(3)
Change is consistent with defense-in-depth philosophy	3.7, 4	Inservice inspection is a defense-in-depth program in itself that is enhanced by focusing examination locations for specific postulated failure mechanism(s) in high safety significant piping segments; all piping systems in scope receive pressure testing and visual examinations. No changes to the plant design are being made with this change.
Maintain sufficient safety margins	3.7	The use of the Perdue statistical model, which is based on the evaluation of potential flaws and leakage rates that are precursors to piping failure leading to the postulated consequences, assures that safety margins are maintained. No changes to the evaluation of design basis accidents in the FSAR are being made by this change.
Proposed increases in CDF or risk, are small and are consistent with the Commission's Safety Goal Policy Statement.	3.6, 3.7, 4.4	Risk-informed ISI is, as a minimum, a risk neutral application and should result in a risk reduction
Use performance-measurement strategies to monitor the change.	4	The implementation of the risk-informed ISI program is over a 10 year interval with examinations scheduled each period. The current ASME Code monitoring program is adopted and plant specific corrective action programs are in place.

SECTION 2
BACKGROUND

This section describes the background and other industry activities associated with applying risk-informed methods to inservice inspection.

2.1 CURRENT ASME CODE REQUIREMENTS

The current inspection requirements for nuclear components are found in the ASME Boiler and Pressure Vessel Code (BPVC) Section XI. The ASME BPVC Section XI was originally based on pre-nuclear operating experience from the operation of boilers and pressure vessels in other industries. It was developed based on expert opinion through a consensus process. Section XI currently requires the examination of three classes of components: Class 1, Class 2, and Class 3.

Class 1 components include piping and components whose failure would prevent orderly reactor shutdown and cause a loss of coolant in excess of normal makeup capability. This includes the principal fluid systems components of the reactor coolant pressure boundary heat transfer loops and also includes portions meeting this criterion of the piping, fittings and valves leading to connecting systems.

Class 2 components are associated with the reactor containment and include those valves and components of closed systems used to effect isolation of the reactor containment atmosphere, components of the reactor coolant pressure boundary not covered in Class 1 and safety system components of the following: residual heat removal system, portions of the reactor coolant auxiliary systems that form a reactor coolant letdown and makeup loop, reactor containment heat removal systems, emergency core cooling system including injection and recirculation portions, air cleanup systems used to reduce radioactivity within the reactor containment, containment hydrogen control system and portions of the steam and feedwater systems.

Class 3 components include safety system components. This includes portions of the reactor auxiliary systems that provide boric acid, emergency feedwater system, portions of components and process cooling systems (electrical and/or compressed air) that cool other safety systems including the spent pool cooling system, on-site emergency power supply and auxiliary systems, some air cleanup systems that reduce radioactivity released in an accident.

The examination areas are based on stress and fatigue and include terminal ends, dissimilar metal welds, and areas of high stress until a required percentage is achieved. The current requirements for the different classes are:

- Class 1 piping systems - 25% welds examined every 10-year interval
- Class 2 piping systems - 7.5% welds examined every 10-year interval
- Class 3 piping systems - Only pressure test for leakage every 10-year interval

There are several examination techniques specified in the code. These are described below.

A visual examination of piping components is performed to determine the general conditions (such as cracks, wear, corrosion, erosion or physical damage) of the part, component or surface examined by direct or remote observation (VT-1), to search for evidence of leakage from pressure retaining components, or abnormal leakage from components with or without leakage collection systems (VT-2) and to assess the general mechanical and structural conditions of components and their supports, such as the verification of clearances, seatings, physical displacements, loose or missing parts, debris, corrosion, wear, erosion, or the loss of integrity at bolted or welded connections (VT-3).

A direct visual examination requires a sufficient space to place the eyes within 24 inches from the surface with an angle not less than 30 degrees from the surface. Mirrors or lenses can be used to improve vision.

Remote visual examination using telescopes, optical fibers, cameras, television systems and other instruments shall have a minimum resolution capability that cannot be less than that seen by direct visual examination.

A visual examination is required to detect leakage during system pressure tests.

A surface examination is performed to detect and size surface or near-to-surface flaws. It may be conducted by either a magnetic particle (MT) or a liquid penetrant (PT) method, eddy current, or other newly developed techniques.

A volumetric examination is performed to detect and size flaws throughout the volume of material. It may be conducted by radiographic (RT), ultrasonic (UT), eddy current, a combination of methods or newly developed techniques.

Effectiveness of Current Requirements

The current ASME Section XI inspection programs require the selection of inspections primarily based on "high (design) stress/high (design) fatigue" weld locations. This criterion was developed about 20 years ago based on the information and experience that was available to the engineers participating in the writing of Section XI of the ASME Code at that time. Operating experience over the past 20 years, however, has shown that failures are not occurring at these design-based locations. Rather, the failures are occurring at locations where unanticipated and unusual operating conditions have developed, such as, thermal striping caused by back leakage through check valves, thermal stratification in sloping pipe systems (e.g., the pressurizer surge line), flow-assisted corrosion, and IGSCC. In addition, the inspection locations originally defined implicitly assumed that all locations within a piping class had equal safety significance. The primary criteria for choosing locations was essentially perceived failure frequency.

One ASME committee recently reported on the current inspection requirements for class 1 piping welds (category B-J). The following is extracted in part and in some instances directly quoted from "Evaluation of Inservice Inspection Requirements for Class 1, Category B-J Pressure Retaining Welds in Piping," developed by the ASME Section XI Task Group on ISI Optimization (ASME 1995).

> "The current ASME BPVC Section XI requirements for class 1 piping welds were established in 1978. Inspection was focused on critical welds presumed to have the highest potential of failure. Inspections were concentrated on terminal ends, dissimilar metal welds, and welds with higher stress levels and fatigue usage factors. Twenty years of service experience, however, has shown no correlation between the welds

selected for examination using current criteria (Category B-J) and actual reported problems. The majority of flaws found in Category B-J piping welds have been caused by factors outside the scope of the current selection criteria (e.g., Intergranular Stress Corrosion Cracking (IGSCC), thermal stratification). This is due in part to the fact that stress analyses are dependent on design conditions such as seismic events more than actual service conditions. A recent industry survey, which included 50 nuclear plants representing 733 cumulative years of reactor operation, confirmed this conclusion. The results are summarized as follows:

1) Of all the survey responses, only 156 Category B-J welds were found to contain service induced flaws.

2) Of the 156 welds containing flaws, the degradation mechanism for 151 of them was IGSCC. Only five welds had flaws attributed to other failure mechanisms.

3) Of the 156 welds containing flaws, 55 were detected by ASME Section XI examinations. The remaining were detected by augmented methods (i.e., U.S. Nuclear Regulatory Commission requirements), visual inspections or leakage.

4) Two of the welds contained flaws caused by "general corrosion" because boric acid from a different system had dripped onto the subject piping.

5) The total population of Category B-J welds addressed in this survey is 37,332. Assuming 25% of the total population was inspected per ASME Section XI, the number of welds inspected would be 9333. Using this number, the following percentages can be calculated:

   - 1.67% of the welds inspected contained flaws.
   - 0.05% of the welds inspected contained flaws caused by a mechanism other than IGSCC.
   - 0.6% of the welds inspected were found to contain flaws by ASME Section XI examinations.

6) None of the flawed welds fell into the category of "high stress/high fatigue" welds. Therefore, there is no apparent relationship between flaws detected and welds selected for inspection due to high design stresses or high fatigue usage factor considerations. (It is recognized that one of the contributing factors to this trend is that many of the older plants cannot categorize by high stress/high fatigue locations because their construction code ANSI B31.1.0 analysis of record is not location specific.)

Given the twenty-plus years of operating nuclear power plant experience in the U.S. and overseas, and the fact that no new plants or plant types, which may be prone to some new degradation mechanism, are being placed in service, it is logical to ask whether a more efficient and technically meaningful means of selecting welds for inservice inspection is possible. Also, recent advances in risk-informed inspection approaches have illustrated that the consequences of failure at a piping location, in terms of threat to reactor safety, ought to play at least as important role in selecting inspection locations as the probability of failure at that location."

This ASME report captures the need to reevaluate the current requirements if improved safety, detection of flaws in components and optimization of critical resources are to be a reality. The need for this improvement is self-evident as the utility industry comes nearer to market deregulation in conjunction with continued safe operational requirements. The incorporation of risk-informed technology into inservice inspection programs will benefit both the utility industry and regulatory bodies in that the "mechanical integrity" of plant components utilizing risk-informed methods in performing inservice inspections will be more accurately known. The utility industry and regulatory bodies will be better able to deal with "aging and life-extension" than under today's rules. In addition, both the regulatory bodies and utility industry will be able to better focus and allocate limited resources to the high-safety significant components. Utilities should experience a reduction in plant operating and maintenance costs associated with risk-informed inservice inspection while maintaining a high level of safety.

2.2 ASME RISK-BASED RESEARCH AND CODE EFFORTS

The ASME has recognized the need for the use of risk-informed methods in the formulation of policies, codes and standards. In 1985, under the direction of the ASME Council on Engineering, a Risk Analysis Task Force was formed to provide recommendations on how this need could be met.

At the suggestion of the Risk Analysis Task Force, the ASME Codes and Standards Research Planning Committee recommended in 1986 that a research program be initiated to determine how risk-informed methods could be used to establish inspection requirements and guidelines for systems and components of interest to the engineering community. Beginning in late 1988, a multi-disciplined ASME Research Task Force on Risk-Based Inspection Guidelines has been evaluating and integrating these technologies in order to recommend and describe appropriate approaches for establishing risk-based inspection guidelines. The task force is comprised of members from private industry, government, and academia representing a variety of industries. Figure 2.2-1 shows the relationship of this ASME research program to the ASME Code.

The research task force published its first document titled, "Risk-Based Inspection - Development of Guidelines, Volume 1, General Document" (ASME 1991). This document describes general risk-based processes and methods that can be used to develop inspection programs for any industrial facility or structural system. Specific applications of this general methodology to particular industries have been addressed by a subsequent series of supplemental volumes. Volume 2 - Part 1, which is the first document of this series, is directed to the inspection of light water reactor nuclear power plant components (ASME 1992). Volume 3 (ASME 1994) addresses the inservice inspection of components in fossil fuel-fired electric power generating stations and includes numerous examples from several applications.

The NRC, as part of the research effort, applied this technology in pilot studies of inspection requirements for both PWR and BWR plant systems (NUREG/CR-6151, Vo et al., 1994). Virginia Power's Surry Unit 1 was studied in more detail regarding the effectiveness of ASME Section XI inspections versus a risk-based inspection approach (NUREG/CR-6181, Vo et al., 1994). The Surry study evaluated selected nuclear steam supply and balance of plant piping systems and components.

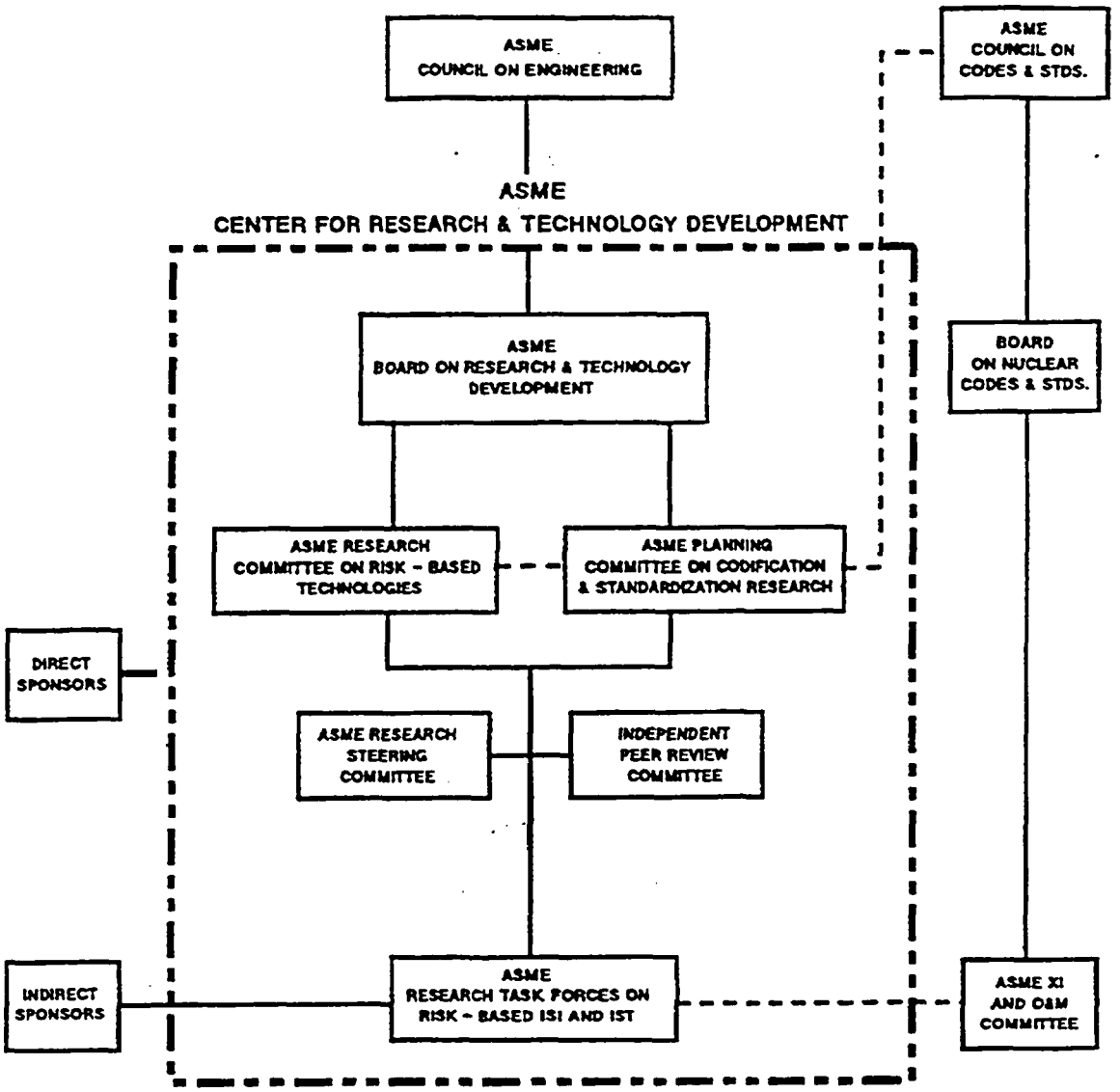

Figure 2.2-1 Organization of ASME Risk-Based Inservice Inspection and Testing Research Projects

At a review meeting in June 1994, U.S. NRC senior management requested the ASME Research Task Force to make the risk-informed ISI process consistent with other PSA applications. Building on the Surry study results, the use of risk-importance measures and review by a plant expert panel were included to enhance the risk-informed ISI process. This revised process, which is being further enhanced in this WOG plant application, has been incorporated into a Volume 2 - Part 2 ASME Research Document (ASME, 1998), along with other research developments to make comprehensive recommendations to ASME Section XI.

ASME Section XI has formed a Working Group on Implementation of Risk-Based Examination to begin making Code changes based on risk for inservice inspection of passive, pressure boundary components. The first efforts of this organization have been to develop Code Cases providing risk-informed selection rules for Class 1, 2, and 3 piping. The ASME research work and industry applications of the technology have been used to support this Code development effort.

In order to allow for trial application of this technology, the ASME Board on Nuclear Codes and Standards (BNCS) voted and approved that Code Cases provide an efficient and effective way to begin implementation in a voluntary manner prior to incorporation into the ASME Boiler and Pressure Vessel Code. During 1997, the ASME BNCS balloted and approved Code Case N-577, "Risk-Informed Requirements for Class 1, 2, and 3 Piping, Method A, Section XI, Division 1," which incorporates the method recommended by the ASME Research Task Force on Risk-Based Inspection Guidelines and evaluated in the WOG plant applications. The ASME BNCS also balloted and approved Code Case N-578, "Risk-Informed Requirements for Class 1, 2, and 3 Piping, Method B, Section XI, Division 1," which incorporates a method recommended by the Electric Power Research Institute (EPRI). Both Code Cases were developed by the ASME Section XI Working Group on Implementation of Risk-Based Examination and have undergone the multiple levels of review and approval required by the consensus standard process.

The appendix to Code Case N-577 describes the risk-informed process, and its contents are outlined in Table 2.2-1 for reference. The WOG risk-informed ISI process is a detailed application within the framework in ASME Code Case N-577, particularly in the Millstone Unit 3 and Surry Unit 1 plant studies discussed in this Topical Report. Therefore, the process methods and plant applications presented in this WOG Topical Report meet the intent of ASME Code Case N-577.

Table 2.2-1 CODE CASE N-577 OUTLINE OF THE RISK-INFORMED PROCESS (NOTE 1)		
1.0	Introduction and Scope	
2.0	Expert Panel Requirements	
3.0	Boundary Requirements	
3.1	Boundary Identification	
3.2	Use of the Applicable PSA	
3.3	Adequacy of the Applicable PSA	
4.0	Risk-Informed Process	
4.1	General	
4.2	Quantitative Approach	
4.2.1	General	
4.2.2	Risk Importance Measures	
4.2.3	Selection of Systems	
4.2.4	Piping Segment Risk Ranking and Selection	
4.2.5	Calculate Piping Segment Risk Importances	
	(a)	Piping Segment
	(b)	Failure Mode
	(c)	Failure Probability
	(d)	Failure Consequence
	(e)	Recovery Action
	(f)	Core Damage Frequency
	(g)	Piping Segment Importances
4.2.6	Select More-Safety-Significant Piping Segments	
4.2.7	Process for Ranking and Selecting Piping Structural Elements	
4.2.8	Piping Structural Element Importance	
4.2.9	Select More-Safety-Significant Piping Structural Elements	
4.2.10	Location and Examination Method Determinations	
5.0	Re-evaluation of Risk-Informed Selections	
6.0	Use of other Piping Inspection Methods	

Note 1: The Code Case uses the terminology "more-safety-significant" while this report uses the terminology "high safety-significant."

2.3 INDUSTRY ACTIVITIES

The nuclear industry recognizes that the current operational, regulatory, and economic environment in the United States presents a unique opportunity to apply probabilistic risk assessment (PRA) or probabilistic safety assessment (PSA) technology. Risk-informed technology provides unique tools that can aid in focusing resources more effectively in areas of true safety significance. Industry experience indicates that utilities have the potential to enhance safety while lowering overall operation and maintenance (O&M) costs through the utilization of insights obtained from routine application of risk-informed technology processes. To this end, the Nuclear Energy Institute (NEI) worked with EPRI to develop a PSA Applications Guide (EPRI 1995) to enhance and expand such processes.

EPRI PSA Applications Guide

As stated in the executive summary of the EPRI guide, "the purpose of the PSA Applications Guide is to provide utilities with guidance on the preparation, utilization, interpretation, and maintenance of plant-specific PSAs for regulatory and non-regulatory applications. The intent of this guide is to provide a framework, within which PSA methodologies can be used to address regulatory and non-regulatory issues associated with plant safety. This guide is general in nature and does not focus on any one application or application type. In this regard, the guide is intended to provide the overall framework within which utility and industry PSA applications can be developed and evaluated." The EPRI PSA Applications Guide suggested criteria for risk-significance is shown in Table 2.3-1.

Nuclear Energy Institute Risk-Informed Inspection Task Force

In January 1995, the Nuclear Energy Institute (NEI) formed a Risk-Informed Inservice Inspection and Inservice Testing (ISI/IST) Task Force, comprised of industry representatives. The mission of the task force is to assist NEI in coordination of industry development of performance and risk-informed methodologies and implementation of an industry regulatory plan for ISI/IST. The goals of the task force are to "support development of methodologies for ISI/IST that are amenable to performance and risk-informed concepts and to support development and implementation of a regulatory plan for resolution of generic performance and risk-informed ISI/IST." The WOG is represented on this task force.

Table 2.3-1 EPRI PSA APPLICATIONS GUIDE GENERAL APPROACH TO OVERALL RISK SIGNIFICANCE DETERMINATION	
Risk Importance Measure	Criteria
Risk Reduction Worth (RRW)	
• System Level	> 1.05
• Component Level	> 1.005
Fussell - Vesely Importance (F-V)	
• System Level	> 0.05
• Component Level	> 0.005
Risk Achievement Worth (RAW) (Component/Train Level)	> 2

Maintenance Rule

The Maintenance Rule and the supporting industry guideline document provide the first true application of risk-informed technology in the regulatory process and provides an excellent foundation and starting point for the application of risk-informed methods to select locations for piping inservice inspection.

As stated in NRC Regulatory Guide 1.160 (NRC 1993), the NRC published the maintenance rule on July 10, 1991, as Section 50.65, "Requirements for Monitoring the Effectiveness of Maintenance at Nuclear Power Plants," (NRC 1991). The NRC's determination that a Maintenance Rule was necessary arose from the conclusion that proper maintenance is essential to plant safety.

10CFR50.65 requires that power reactor licensees monitor the performance or condition of structures, systems, and components (SSCs) against licensee-established goals in a manner sufficient to provide reasonable assurance that such SSCs are capable of fulfilling their intended functions. Such goals are to be established commensurate with safety and, where practical, take

into account industry-wide operating experience. When the performance or condition of an SSC does not meet established goals, appropriate corrective action must be taken.

Performance and condition monitoring activities and associated goals and preventive maintenance activities must be evaluated at an interval associated with every refueling outage (but not to exceed 2 years), taking into account, where practical, industry-wide operating experience.

An industry document, "Industry Guideline for Monitoring the Effectiveness of Maintenance at Nuclear Power Plants," NUMARC 93-01 (NUMARC 1993), was developed by the NUMARC[1] Maintenance Working Group, Ad Hoc Advisory Committees for the Implementation of the Maintenance Rule, and an Ad Hoc Advisory Committee for the Verification and Validation of the Industry Maintenance Guideline. The NUMARC 93-01 industry guide was endorsed by the NRC in Regulatory Guide 1.160, "Monitoring the Effectiveness of Maintenance at Nuclear Power Plants" (NRC, 1993).

As stated in NUMARC 93-01, "this industry guideline has been developed to assist the industry in implementing the final Maintenance Rule and to build on the significant progress, programs and facilities established to improve maintenance. The guideline provides a process for deciding which of the many SSCs that make up a commercial nuclear power plant are within the scope of the Maintenance Rule. It then describes the process of establishing plant-specific risk significant and performance criteria to be used to decide if goals need to be established for specific structures, systems, trains and components covered by the Maintenance Rule that do not meet their performance criteria.

As of July 10, 1996, all SSCs that are within the scope of the Maintenance Rule will have been placed in (a)(2) (of 10CFR50.65) and be part of the preventive maintenance program. To be placed in (a)(2), the SSC will have been determined to have acceptable performance. In addition, those SSCs with unacceptable performance will be placed in (a)(1) with goals established. This determination is made by considering the risk significance as well as the

[1] The Nuclear Management and Resource Council (NUMARC) has since been integrated with other industry organizations to become the Nuclear Energy Institute (NEI).

performance of the SSCs against plant-specific performance criteria. Specific performance criteria are established for those SSCs that are either risk significant or standby mode; the balance are monitored against the overall plant level performance criteria."

In general, most utilities have completed identification of risk significant SSCs by exercising the PSA models that were initially used to meet the generic IPE requirements of NRC Generic Letter 88-20. The total contribution to core damage frequency (CDF) and large early release frequency (LERF) are used as a basis for establishing plant-specific risk significant criteria.

The NUMARC 93-01 suggested criteria for the determination of risk-significance are:

- Risk-Reduction Worth (RRW) of greater than 1.005
- Risk-Achievement Worth (RAW) of greater than 2
- Components included in cutsets that cumulatively account for about 90 percent of the core damage frequency.

Expert Panel. When the PSA is utilized for the Maintenance Rule application, a panel of individuals experienced with the plant PSA and with operations and maintenance (usually from the utility) is also used in the decision-making process. The panel utilizes their expertise and PSA insights to develop the final list of risk significant systems. NUREG/CR-5424, "Eliciting and Analyzing Expert Judgement," (Meyer and Booker 1989) is used as a guideline in structuring the panel. The panel's judgments usually consider the risk achievement worth and risk reduction worth risk importance calculational methods shown previously and further described in Sections 9.3.1.1 and 9.3.1.3 of NUMARC 93-01. Each method is useful in providing insights into selecting those SSCs that will be included in the maintenance rule and consideration is given to using both of them in the decision-making process.

The use of the expert panel process compensates for the limitations of PSA implementation approaches resulting from the PSA structure and limitations in the meaning of the importance measures. The expert panel process that is used for the Maintenance Rule should also be used for the risk-informed ISI application. However, additional experts should be considered,

particularly those cognizant of current ISI requirements, component failure data, and results of any previously performed inservice inspections or maintenance.

2.4 NRC ACTIVITIES

The Nuclear Regulatory Commission has been working to develop a framework for the expanded use of probabilistic risk analysis (PRA) methods in NRC's reactor regulatory activities to improve safety decision making and improve regulatory efficiency in order to respond to the Staff Requirements Memorandum dated June 30, 1995, requesting that the staff complete such a framework and to provide a status of PRA standards development efforts. The NRC issued a policy statement on the use of PRA in August 1995 which encouraged greater use of PRA (NRC, 1995). The NRC, in conjunction with the policy statement, also developed a PRA Implementation Plan (NRC, 1997).

The PRA Implementation Plan defines NRC staff efforts to convert the conceptual structure of the PRA Policy Statement into practical guidance for staff uses of PRA in reactor regulation. One aspect of the Plan is the development of "... a risk-based regulatory framework."

The purpose of the framework is to provide a general structure to ensure consistent and appropriate application of PRA methods. The NRC staff has identified the principal parts of this framework, including: identifying regulatory applications amenable to expanded use of PRA, addressing deterministic considerations, addressing probabilistic considerations, and integrating these elements. According to the NRC, the first two parts are relatively well established. The principal focus of the staff's efforts is development of the probabilistic considerations and integration of the deterministic and probabilistic portions. To accomplish this, the staff has developed a six step process. The steps include: identifying specific applications, conducting pilot programs, developing and documenting an acceptance process and criteria, making near-term regulatory decisions, developing formal PRA standards, and making long-term modifications to regulations (if necessary).

In an internal memo to NRC EDO dated November 30, 1995, NRC Chairman Shirley Ann Jackson states (in part):

> "Based upon information which I have reviewed and the briefings which I have received since joining the Nuclear Regulatory Commission, I believe that improvements are needed in NRC review and utilization of probabilistic risk assessment (PRA) ... With respect to PRA, these improvements will ensure thorough review as well as consistent and appropriate application of such methods, and will focus the agency's resources and regulations on those issues most important to safety. ... In the area of PRA, Chairman Jackson requested: "development of a standard review plan [SRP] for use by the NRC staff in conducting reviews of industry-generated IPEs, IPEEEs, and PRAs for use in regulatory decision-making. This SRP should contain standards by which the quality and extent of acceptability for regulatory purposes of the PRAs would be judged by the NRC. Chairman Jackson's objective in developing an SRP is to ensure that the NRC has standards that are both broad in scope and generally applicable to whatever use PRAs may be put while also be sufficiently useful for systems-specific PRAs such as ISI/IST, Quality Assurance, Technical Specifications, Risk Informed Inspections, etc. ... Since I believe this is a very important task for this agency to accomplish, given the current volume of PRA work in the nuclear industry and NRC's lengthy corporate experience in this area, I want to establish an overall goal of two years for completion of this task with quarterly written status reports and NRC staff progress briefings to the Commission every six months. ..."

As a result of this memo, the term "risk-informed" has come to imply that decisions are based on risk insights along with deterministic and licensing basis information. This can be contrasted to the term "risk-based" which implies that final decision criteria are based solely on absolute risk values. This process is now being applied to a number of regulatory applications, including: Maintenance Rule implementation, motor-operated valve testing associated with Generic Letters 89-10 and 96-05, inservice testing, risk-informed technical specifications, graded quality assurance, and inservice inspection.

As discussed in section 1.4, the NRC issued as draft and then finalized regulatory guides and standard review plans for inservice testing, risk-informed technical specifications, and graded

quality assurance along with the general regulatory guide and standard review plan to provide the overall framework for risk-informed applications.

With regard to risk-informed inservice inspection, the NRC developed guidance for this application issued as draft in October 1997 and then issued for trial use as RG-1.178 in 1998.

SECTION 3

APPLICATION OF RISK-INFORMED METHODS TO ISI

This section describes the process and how it was applied to the representative WOG plant and the Surry pilot plant.

3.1 OVERVIEW

The overall recommended risk-informed inservice inspection process (as defined by ASME Research) includes four major parts as shown in Figure 3.1-1. The four major parts of the process shown in Figure 3.1-1 include:

- **Scope Definition** - Definition of system boundaries and success criteria using a plant PSA that was initially developed to meet Individual Plant Examination (IPE) requirements by the Nuclear Regulatory Commission (NRC 1988);

- **Risk Ranking** - ranking of components into high safety-significant and low safety-significant categories, by applying risk importance measures and deterministic insights with the plant expert panel making the final selection of where to focus ISI resources;

- **ISI Program Development** - determination of an effective ISI program that defines when and how to appropriately inspect the two categories of components; and

- **Perform ISI** - performance of the ISI program to verify component reliability and then updating the risk rankings and/or inspection methods based on the inspection results.

The above process can also be applied to inservice testing as shown on the figure. This report focuses on the identification of where to inspect, the inspection methods, number of inspections required, and the development of an effective monitoring and feedback process.

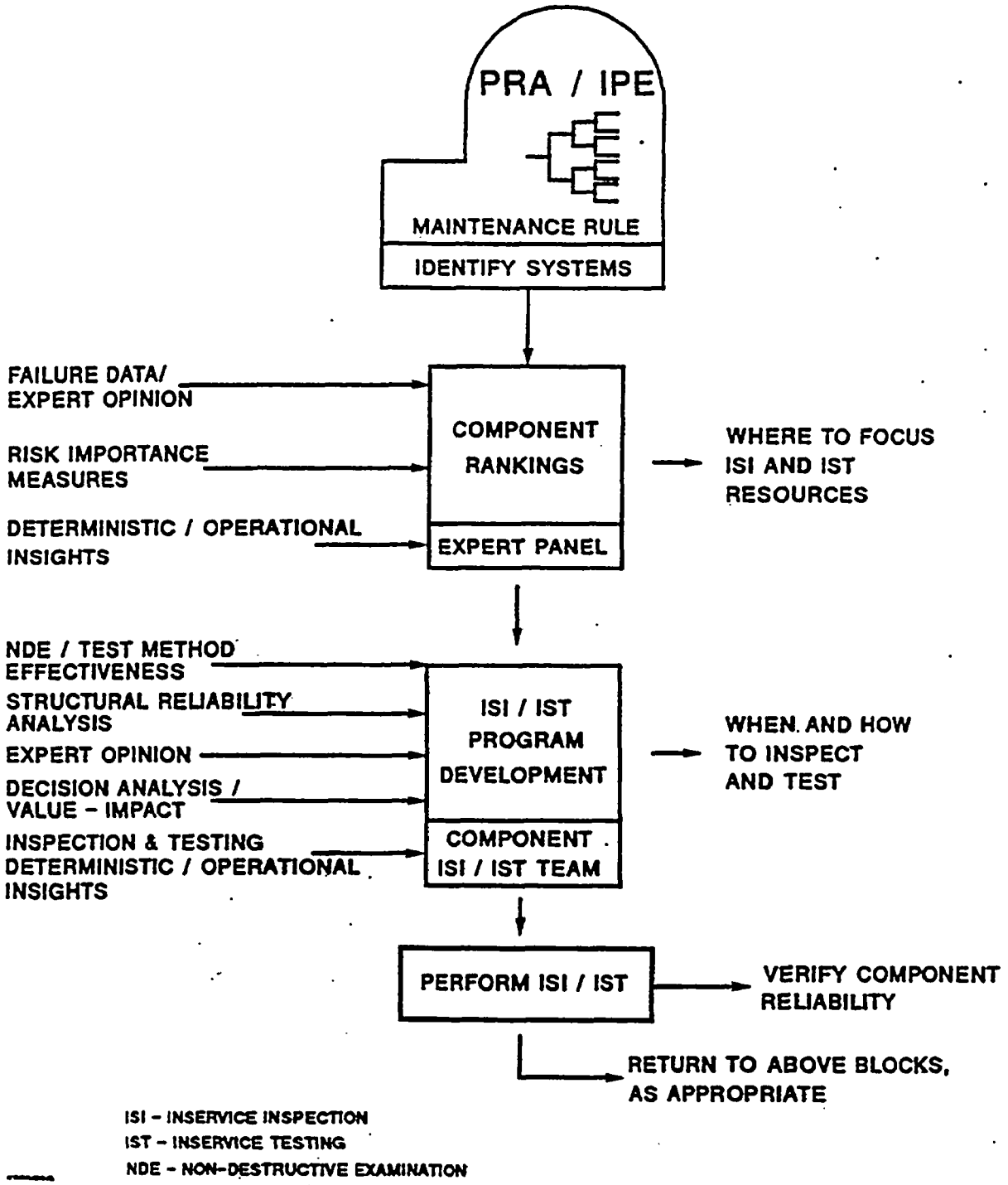

Figure 3.1-1 General ASME Research Risk-Informed Inservice Inspection and Testing Process

3.1.1 Overall Process

The overall risk-informed ISI process that has been used in the WOG plant applications is shown in Figure 3.1-2. The process involves the following steps:

- **Scope Definition** - The fluid systems contained in the plant, modeled in the PSA and considered as risk-significant for the Maintenance Rule, are identified and compared with the current classifications and required ISI examinations, and with the existing stress analyses (if available). This review, along with other plant documentation, is used to determine which systems/classes, or portions of systems/classes, should be evaluated as part of the risk-informed ISI process. Given that system boundaries involve system functions and may also involve interfaces between different types of systems, the definition of these boundaries requires a careful, logical approach. All interfaces must be identified to ensure that there is consistency between the defined boundaries, when viewed from the systems on either side of each boundary, and that no safety functions are overlooked.

- **Segment Definition** - This task involves the development of piping segments for the risk-ranking. A piping segment is defined as a portion of piping for which a failure at any point in the segment results in the same consequence (e.g., loss of a system, loss of a pump train, etc.) and includes piping structural elements between major discontinuities such as pumps and valves.

- **Consequence Evaluation** - The consequences given the failure of a piping segment are identified through PSA insights, engineering evaluations and plant design and operations review. Consequences that must be considered include both direct effects (failure of a train in which the piping segment is contained) and indirect effects (such as those due to flooding, pipe whip, or jet impingement).

- **Failure Probability Assessment** - The task of estimating component failure probabilities for each piping segment can be challenging. In most cases though, consideration of failure probabilities, however uncertain their estimated values, leads to more effective allocation of inspection resources compared to present practices.

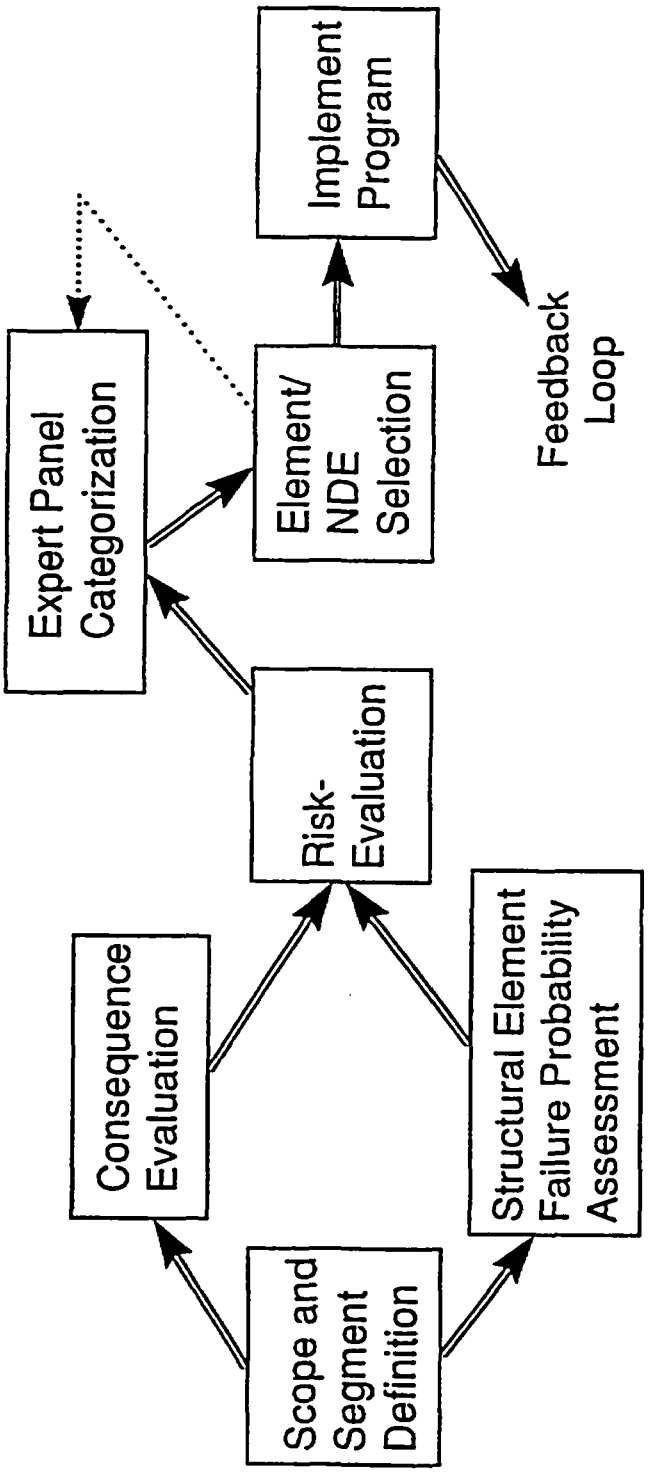

Figure 3.1-2 WOG Risk-Informed Inservice Inspection Process (Expansion of the First Two Parts of the General ASME Research Process in Figure 3.1-1)

Although absolute values of failure probabilities may have large uncertainties, the relative values (e.g., from location to location in a given piping system) are generally better known. Structural reliability/risk assessment (SRRA) models, based on probabilistic structural mechanics methods, are used to estimate failure probabilities for important components.

- **Risk Evaluation** – This task is to identify and prioritize the important components (or pipe segments). The approach calculates the relative importance for each component within the systems of interest. This risk-importance is based on the core damage frequency (and large early release frequency, if available) resulting from the structural failure of the component in a given segment and the total pressure boundary core damage frequency. The results are then used to calculate the risk-importance for each segment within the system.

- **Expert Panel Categorization** – An expert panel (such as the expert panel used for the Maintenance Rule supplemented by appropriate ISI-related disciplines) evaluates the risk-informed results and makes a final review to determine the high safety-significant pipe segments for ISI.

- **Element/NDE Selection** – The identification of potential inspection locations within each high safety-significant pipe segment is obtained by a further review of the structural elements and postulated failure mechanisms. The output of the process defines the structural elements selected for inspection. The method and frequency of the inspection is then determined by a focused ISI team comprised of materials, ISI and NDE expertise. The selections are then reviewed and approved by the expert panel.

- **Implement Program** – the risk-informed ISI program is implemented by changing any plant documents, procedures, etc.

- **Feedback Loop** – a reevaluation is performed periodically based on changes such as: 1) plant design and operational changes; 2) industry experience, 3) plant ISI experience, 4) plant PSA model changes. This allows for shift of emphasis to areas of concern over time.

3.1.2 Use of the EPRI PSA Applications Guide

To support risk-informed ISI analyses, the PSA should reflect the current plant configuration and operational practices. A full-power Level 1 and Level 2 PSA focused on the internal events scenarios is recommended. However, it is recognized that not all plants have a Level 2 PSA that can be used to determine LERF and thus may have to evaluate LERF using qualitative deterministic methods and through the plant expert panel. External events and shutdown PSA models are not necessary for this application as these insights can be derived through qualitative evaluations and through the plant expert panel. A thorough internal flooding evaluation provides a good foundation for the examination of indirect (spatial) effects, which are considered as part of the risk-informed ISI process.

In addition, the PSA must be fundamentally sound. This is determined by applying the "Checklist for Technical Consistency in a PSA Model," Appendix B of the EPRI PSA Applications Guide. The intent of the checklist is to ensure that the PSA "conforms to the industry state-of-the-art with respect to completeness of coverage of potential scenarios." If the plant PSA falls outside the responses to these questions, a plant-specific justification should be documented such that information is identified during the application and considered as part of the plant expert panel's categorization.

No modifications to the plant PSA are envisioned for the application of the risk-informed ISI process.

The EPRI PSA Applications Guide, as discussed in Section 2, provides the framework and guidance on using PSA for applications. The application of risk-informed ISI is built from PSA modeling efforts used initially to meet NRC IPE requirements and within the framework outlined in the EPRI PSA Applications Guide. The guide discusses some specific questions and considerations, which are addressed prior to a specific PSA application, in three areas: Application Planning, Analysis, and Results Interpretation. General guidance is also presented for PSA Maintenance and Updates that is necessary for risk-informed ISI applications. With respect to the guide, the following phases are considered for risk-informed ISI.

Application Planning

The first phase involves problem definition, scope assessment, and identification of the figures of merit to be used in the quantitative analysis. Each element is described below in relation to risk-informed ISI.

- Problem Definition – PSA can be used in the ranking or prioritization of components (including pipe segments) and structural elements for ISI to identify where resources should be focused in order to justify a change to nuclear utility ISI plans. For ISI ranking, the PSA is to be supplemented with further specific failure data (using experience data sources, expert judgement, and/or structural reliability methods) to represent pressure boundary failures which are not usually modeled in detail in current PSA models. The change in ISI scope based on the PSA will be evaluated on a relative basis to assess the degree of risk significance (importance) of components and structural elements independent of any changes to the plant. However, the scope is to be updated on a regular basis to reflect the results of inservice inspections, plant design or operation changes, PSA model and data updates, and new industry findings, as appropriate. The ISI ranking results are to also be reviewed by a utility expert panel (peer review group) to include deterministic insights and to make the final prioritization.

- Scope Assessment – Since many U.S. plants do not have full scope PSAs (full Level 3 PSA), ISI ranking should initially focus on systems, components, and structural elements involved in PSA internal event scenarios. External event scenarios (fires, earthquakes, etc.) and shutdown considerations should be addressed by the expert panel if external events and shutdown PSAs are unavailable. For pressure boundary components that protect containment integrity, Level 2 PSA insights are to be addressed in the ISI ranking of these components by explicit PSA modeling, if available, and the expert panel.

- Figures of Merit – Core damage frequency (CDF) due to pressure boundary failures is the preferred Level 1 PSA figure of merit and large, early release frequency (LERF) due to pressure boundary failures is the preferred Level 2 PSA figure of merit. For risk-informed ISI prioritization or ranking, two measures of risk importance have been

found to be quite useful in characterizing risk properties in aiding decision-making. The two measures are termed "Risk Achievement Worth" (RAW) and "Risk Reduction Worth" (RRW). The risk achievement worth of a feature (system, component, or structural element) is a measure of how the figure of merit (CDF or LERF) could increase if the feature were guaranteed to fail at all times. The risk reduction worth is a measure of how much the figure of merit could decrease if the feature were guaranteed to succeed at all times.

Fussell-Vesely (F-V) Importance may be used in lieu of RRW because of the mathematical relationship between the measures. The following relationship allows translation of F-V results to RRW:

$$RRW = \frac{1}{[1 - (F\text{-}V)]}$$

Technical Analysis

The technical analysis phase contains three key aspects: assessment of the adequacy of the PSA, establishing the cause and effect relationship associated with the change being evaluated, and defining the overall technical approach.

- Adequacy of PSA Model – Section 3.1 of the EPRI PSA Guide outlines a number of guiding principles for a PSA application to be successful. The PSA model should accurately reflect the current plant configuration and operational practices. For ISI ranking, the PSA model or its results can be modified to represent pressure boundary integrity failures, as previously noted. In addition, care must be taken in defining and insuring agreement of system boundaries and definitions between the PSA and those currently used in ISI plans.

  The PSA model will need to assess and possibly incorporate plant design and operation changes, results of inservice inspections and new industry findings, as appropriate. Given that ISI plans are currently implemented over a 10-year interval, in general, this should be considered as the longest response time for the PSA model for this application. Shorter response times may be necessary for systems, components, and

structural elements that have the potential to be subjected to aggressive degradation mechanisms as identified in the risk-ranking process for ISI.

The assumptions and limitations of the base PSA can have a strong impact on the overall risk-ranking results. The EPRI PSA Guide addresses this issue by providing a checklist for technical adequacy in Appendix B of the guide which identifies the key Level 1 internal events PSA elements that have been found in past PSA applications to have the most significant potential for influencing results. Questions concerning the quality of the PRA should be addressed on a plant-specific basis when applying this methodology to modify a plant's ISI program. Internal and external peer reviews are a utility's decision.

- Establishing a Cause-Effect Relationship – A key step in performing the risk-ranking of components and structural elements involves the identification of the portions of the PSA affected by this ISI application. General guidance for determining elements of a PSA that may need to be modified for successful application are provided as a list of questions, which are grouped by PSA model element in Tables 3-1 and 3-2 of the EPRI guide. Key general considerations regarding this cause-effect relationship for risk-informed ISI are discussed below for Level-1, internal events PSAs (only for portions of the PSA that are affected). However, these questions should be revisited by each user because of variabilities in PSA models across the industry and if Level-2 or External Events PSAs are going to be exercised for this application.

  Initiating Events – The risk-informed ISI application requires the consideration of component pressure boundary failures as initiating events throughout key plant systems. While some industry failure rates have been established for pressure boundary failures, focused effort is required to obtain failure probabilities at the component (or pipe segment) level using existing failure data, expert opinion, and/or structural reliability modeling.

  System Reliability Models – This application may require the introduction of new branches to represent components and pipe segments that have not been explicitly modeled in the PSA. However, because pressure boundary failures are low probability

events, these failures may be simulated by including the pressure boundary failure probability with the failure probability of an already-modeled component that would result in the same impact on the system operation (i.e., same consequence), or using a surrogate component.

Parameter Data Base – Failure probabilities for pressure boundary failures must be obtained. This can be done via several methods including industry databases, expert opinion/elicitation or structural reliability methods.

Human Reliability Analysis – Recovery actions may be necessary in order to isolate a pressure boundary failure in order to mitigate or reduce the consequences. These actions are treated on a case-by-case basis and an estimated failure probability is based on discussions with the plant staff and calculated via human reliability techniques, if necessary.

Quantification – This application requires the calculation of the core damage frequency and large early release frequency (if available) due to pressure boundary failures and the calculation of importance measures based on these frequencies.

Analysis of Results – This application uses an importance analysis to rank segments based on pressure boundary failures and their consequences. Quantitative sensitivity studies should be included in the evaluation.

- <u>Technical Approach</u> – The risk-informed ISI application requires manipulation of the PSA model to evaluate the figure of merit. The PSA model and/or results are used as input to a model to determine the core damage frequency due to pressure boundary integrity failures. These failures and their related consequences should be evaluated in a realistic manner to obtain useful risk-ranking values for purposes of ISI.

  A blended approach is used for the risk-informed ISI application. Reviews of operational experience, engineering judgement, and/or structural reliability engineering analyses are used to obtain pressure boundary integrity failure probabilities for use with the evaluations using the PSA model. An expert panel is also utilized to review the PSA risk-rankings and to make the final prioritization groups for ISI.

Results Interpretation

The reporting and interpretation of PSA application results can be divided into three distinct elements: qualitative assessment of results, quantitative assessment of results, and reporting requirements.

- Quantitative Criteria – The baseline piping pressure boundary failure PSA results can be used to assess the degree of risk significance of components for purposes of inservice inspection. The criteria in Table 4-2 of the EPRI Guide have been found to provide useful results on a component level basis. However, one key modification should be made for the risk-informed ISI piping application as follows.

  The total CDF (and LERF) in the above risk significance evaluation should only account for those associated with piping pressure boundary failures. If the total CDF (and LERF) for all plant internal events is used, few, in any, of the pressure boundary components will be high safety-significant. Thus, the PSA results will be useless in helping to determine where to focus priorities for ISI. Modeling the piping pressure boundary failures and then assessing the relative risk significance to a total CDF (and LERF) related to just pressure boundary failures renders more meaningful results. In other words, the PSA model has been used to assist in defining ISI programs that will ensure that piping pressure boundary failures do not become major contributors to total plant risk as a result of age degradation mechanisms. Risk-informed ISI programs will help to keep the assumptions that piping pressure boundary failures are low probability events valid in the PSA.

  Table 3.1-1 summarizes criteria for risk significance determination for ISI. The table includes appropriate criteria from Table 4-2 of the EPRI Guide and the above modifications. Section 4.2.6 of the EPRI guide provides further discussion on the risk importance measures for prioritization and ranking. This section also discusses the combined ranking or prioritization of results when more than one figure of merit is used.

Table 3.1-1 APPROACH TO OVERALL RISK SIGNIFICANCE DETERMINATION FOR ALTERNATIVE RISK-INFORMED SELECTION PROCESS FOR INSERVICE INSPECTION[a]	
Risk Importance Measure	Criteria[b]
	Pipe Segment Level
Risk Reduction Worth (RRW)[d]	>1.005
Fussell-Vesely Importance (FV)[d]	>0.005

(a) Adapted from EPRI PSA Applications Guide (EPRI 1995)[c]

(b) These criteria apply to the use of a total CDF $(LERF)_{PIPING}$, which is the total core damage frequency (or large early release frequency) attributed to pressure boundary failure in plant piping systems.

(c) Piping failure probabilities are typically very small compared to other component failures modeled in the PSA. When the failure probability is set to 1.0 for the RAW calculation, large RAW values typically result. Therefore, the EPRI guideline classifying a segment as high safety-significant for RAW values greater than 2 does not provide meaningful results. Instead, the safety-significance determination focused on the RRW values, and RAW values were used on a relative basis to help differentiate segments which had similar RRW values.

(d) RRW and FV are interrelated as shown by the equation:

$$RRW = \frac{1}{[1 - (FV)]}$$

and either measure can be applied.

- <u>Qualitative Assessment</u> – Section 4.3 of the EPRI Guide provides a general discussion on the qualitative review of the results. Sensitivity studies are used to evaluate the impacts.

- <u>Reporting</u> – Section 4.4 of the EPRI Guide outlines some minimum general practices for documentation of a PSA application. Section XI of the ASME Boiler and Pressure Vessel Code also defines requirements for records and reports that will apply in the documentation of the process used to select ISI locations. A recommended process for reporting requirements associated with a RI-ISI program is described in Section 4 of this report.

3.1.3 Representative WOG Plant

In order to apply the risk-informed ISI process, a plant was identified to apply this process. Northeast Utilities volunteered the Millstone Unit 3 plant to be the representative WOG plant for this application.

The Millstone Nuclear Power Station Unit 3 (MP3) is located on a site in the town of Waterford, New London County, Connecticut, on the north shore of the Long Island Sound. The plant was designed and constructed by Stone and Webster and features a PWR by Westinghouse Electric Corporation and a turbine generator furnished by General Electric. It incorporates a 4-loop closed-cycle type nuclear steam supply system (NSSS). The reactor is operated inside a reinforced concrete containment structure maintained at a subatmospheric pressure between 10.6 and 14.0 psia. The reactor core is designed for a warranted power output of 3411 MWt, which is the license application rating. This output, combined with the reactor coolant pump heat output of 14 MWt, gives the NSSS warranted output of 3,425 MWt. The gross calculated electrical output is approximately 1153 MWe.

The Millstone Unit 3 current ISI plan for the first 10-year interval consists of ASME Class 1, 2, and 3 systems and components (and their supports) and was developed and has been updated during the interval by giving due consideration to the following documents:

- 10CFR50.55a - Title 10: Code of Federal Regulations Part 50 Revised as of January 1, 1995
- Section XI of the ASME Code, 1983 Edition through the Summer 1983 Addenda - Rules for Inservice Inspection of Nuclear Power Plant Components
- Section XI of the ASME Code, 1983 Edition through the Winter 1985 Addenda - Rules for Inservice Inspection of Nuclear Power Plant Components
- Section III of the ASME Code - Rules For Construction of Nuclear Power Plant Components
- Section V of the ASME Code - Nondestructive Examination
- USNRC Standard Review Plan (SRP 6.6, Section II-7)

- USNRC Regulatory Guides:

  Regulatory Guide 1.14, Rev. 1, August 1975 - Reactor Coolant Pump Flywheel Integrity

  Regulatory Guide 1.26, Rev. 3, February 1976 - Quality Group Classifications and Standards for Water-, Steam-, and Radioactive Waste-Containing Components of Nuclear Power Plants

  Regulatory Guide 1.65, Rev. 0, October 1973 - Materials and Inspections for Reactor Vessel Closure Studs

  Regulatory Guide 1.83, Rev. 1 July 1975 - Inservice Inspection of Pressurized Water Reactor Steam Generator Tubes

  Regulatory Guide 1.147, Rev. 11, October 1994 - Inservice Inspection Code Case Acceptability - ASME Section XI Division 1

  Regulatory Guide 1.150, Rev. 1, February 1983 - Ultrasonic Testing of Reactor Vessel Welds During Preservice and Inservice Examination

- Millstone Unit 3 FSAR

- Millstone Unit 3 PSI Inspection Plan (PSI-2.01)

- Millstone Unit 3 Technical Specifications

At present the unit is in the process of updating and developing the ISI plan for its second 10-year interval to the ASME Code Section XI, 1989 Edition. The ASME Code Section XI, Editions and Addenda used for piping requirements in the first 10-year interval are essentially the same as those now being referenced for the second 10-year interval. The following paragraphs help explain the relationships in these requirements as they have been used in the past and are currently being updated. Except for minor plant changes and some clarifications in the requirements provided by current Code interpretations the ISI plans for the first and second 10-year intervals as they relate to piping examinations will be the same.

During the first 10-year interval, Class 1 examination requirements for piping were taken from the ASME Code Section XI, 1983 Edition up to and including the Summer 1983 Addenda.

These Class 1 requirements are described under Table IWB-2500-1, Examination Category B-F, Pressure Retaining Dissimilar Metal Welds and Examination Category B-J, Pressure Retaining Welds in Piping. Other than some minor editorial changes in these tables all the requirements are identical to the ASME Code 1989 Edition and the requirements state that the welds initially selected during the first 10-year interval will be reexamined during the next 10-year interval and are being scheduled accordingly.

Class 2 examination requirements for piping used during the beginning of the first 10-year interval were originally taken from the alternative rules provided in Code Case N-408, Alternative Rules for Examination of Class 2 Piping Section XI, Division 1 and later updated to the ASME Code Section XI, 1983 Edition with the Winter 1985 Addenda. Under this Code Case and the Winter 1985 Addenda requirements both the Examination Category C-F-1, Pressure Retaining Welds in Austenitic Stainless Steel or High Alloy Piping and the Examination Category C-F-2, Pressure Retaining Welds in Carbon or Low Alloy Steel Piping were applied identically. As with the Class 1 examination requirements only minor editorial changes have been made in the ASME Code Section XI, 1989 Edition requirements for these welds and the same requirement exists to select welds for examination during the second 10-year interval that were selected for examination during the first 10-year interval.

In August of 1983, a Level 3 Probabilistic Safety Study for Millstone Unit 3 was completed by a combined effort of Westinghouse and Northeast Utilities. This study also included an examination of external events. Six substantial updates were performed before the Individual Plant Examination (IPE) was submitted in 1990. Millstone Unit 3 received the Safety Evaluation Report (SER) on the IPE in May of 1992 (NRC 1992). The IPE submittal also included a section addressing External Events; however, MP3 is still awaiting an IPEEE SER. Since the IPE submittal, a major update of the Level 1 PSA was completed in 1995 to incorporate plant history, design changes, NRC IPE recommendations and change in methodology from support states to large fault trees. This updated PSA model was used as a basis for this project.

The base plant PSA core damage frequency due to internal events is 5.87E-05/yr. Table 3.1-2 provides the core damage contribution of each internal events initiator for Millstone Unit 3. The dominant accident sequences include a total loss of Service Water with failure to recover

Table 3.1-2 MILLSTONE 3 PLANT PSA CORE DAMAGE FREQUENCY PERCENT CONTRIBUTION BY INITIATOR	
Initiating Event	Percent Contribution to Overall. Base Plant PSACDF
Large Loss of Coolant Accident (LOCA)	3.3
Medium LOCA	7.0
Small LOCA	3.8
Steam Generator Tube Rupture (SGTR)	2.0
Incore Instrument Tube Rupture	2.6
Steamline Break Inside Containment	2.8
Steamline Break Outside Containment	2.8
General Plant Transient	9.5
Loss of Main Feedwater (MFW)	1.3
Loss of Offsite Power (LOSP)	2.3
Station Blackout	1.5
Loss of 1 Service Water Train	3.1
Total Loss of Service Water	10.4
Loss of 1 DC Bus A (B)	<.01
Total Loss of DC	<.01
Loss of Vital AC 1 or 2	.06
Loss of Vital AC 3 or 4	<.01
Anticipated Transient Without Scram (ATWS)	8.7
Consequential Small LOCA	23.6
Consequential Steamline Break Inside Containment	<.01
Consequential Steamline Break Outside Containment	<.01
Interfacing Systems LOCA (ISLOCA)	3.9

leading to a consequential small LOCA, and small LOCA with failure of recirculation. The core damage frequency due to internal flooding is 8.5E-07/yr. The core damage contribution due to external events is dominated by seismic and fire events. The CDF due to seismic events is 9.08E-06/yr, and is 4.85E-06/yr due to fire.

3.1.4 Surry Pilot Project

Virginia Power was approached to be a pilot plant in late 1995 to support the WOG risk-informed ISI methodology on piping. Surry had been previously studied for probabilistic risk assessment (PRA) in earlier work for NUREG-1150 (NRC, 1987). Additionally, initial ISI application work using PRA insights performed for the U.S. Nuclear Regulatory Commission by Pacific Northwest National Laboratories was conducted at Surry. Virginia Power committed to the NRC to be a pilot for this application on April 8, 1996. The Surry Pilot Project is limited to Surry Unit 1.

Virginia Power's Surry Power Station is located on the James River in Surry County, Virginia near the city of Williamsburg. The construction permits for Surry Units 1 and 2 were issued on June 25, 1968. At that time, the ASME Boiler and Pressure Code covered only the construction of nuclear vessels. Piping was generally constructed to the rules of USAS B31.1 and applicable nuclear code cases. Surry Unit 1 started commercial operation on December 22, 1972 and Surry Unit 2 started commercial operation on May 1, 1973. The units are Westinghouse designed 3-loop PWR steam supply systems each rated at 2546 MW thermal and approximately 855 MW electric. The Surry units use a subatmospheric containment design.

Currently both units perform ISI inspections on piping to the requirements of the ASME Boiler and Pressure Vessel Code Section XI, 1989 Edition. The units are both currently in the third inspection interval as defined by the Code for Program B. As Surry Power Station was designed and constructed prior to the origination of the ASME code classifications (Class 1, 2, and 3), the system classifications for ISI are based upon the guidance found in Regulatory Guide 1.26, Rev. 3 (February 1976), "Quality Group Classifications and Standards for Water-, Steam-, and Radioactive Waste-Containing Components of Nuclear Power Plants" and 10 CFR 50.55a - Title 10, "Code of Federal Regulations - Energy." Pursuant to 10 CFR 50.55a(g)(1) requirements are assigned within the constraints of the existing design basis.

In August 1991 a probabilistic safety assessment (PSA) of Surry Nuclear Power Station was completed in response to Generic Letter 88-20. The study included a Level 1 PRA for internal events and internal flooding and a Level 2 analysis to identify the Containment Building performance and the potential source terms. The work was performed by a joint project team of Virginia Power and NUS (Scientech) personnel. Surry received an SER on the IPE in 1993. The PSA model has been revised several times to incorporate some plant configuration and procedural changes as well as enhancing the mechanics for running the model.

Based on the latest PSA model, the point estimate core damage frequency at Surry from internal events is 7.2E-05 per year and the point estimate large early release frequency is 1.1E-5 per year. The point estimate core damage frequency from internal flooding is calculated to be 2.5E-05 per year. Each initiating event's point estimate contribution to the overall core damage frequency is shown in Table 3.1-3. The dominant accident sequences include:

- Loss of switchgear room cooling and failure of the alternative cooling which leads to loss of all switchgear and subsequent core damage from the unit blackout. The dominant contributors to failure are failure of the operator to establish cooling from the other unit and failure to load shed according to procedure.

- Loss of offsite power with at least one diesel generator available at Units 1 and 2. The Auxiliary feedwater and feed and bleed are unavailable. The dominant contributors to this sequence are the common cause failure of the AFW discharge check valves.

- Small LOCA initiator with the failure of high pressure injection and the failure of core cooling recovery.

- Steam generator tube rupture sequence which involves the failure of the operator to achieve early cooldown and depressurization followed by failure to achieve late cooldown using secondary heat removal.

Table 3.1-3 SURRY PLANT PSA CORE DAMAGE FREQUENCY PERCENT CONTRIBUTION BY INITIATOR	
Initiating Event	Percent Contribution to Overall Plant PSA CDF
Loss of Emergency Switchgear Room Cooling	22.5%
Small LOCA (3/8" to 2")	18.4%
Steam Generator Tube Rupture	13.0%
Loss of Offsite Power No Diesels Available	10.6%
Loss of Offsite Power One Diesel Available	10.4%
Medium LOCA (2" to 6")	7.3%
Large LOCA (> 6")	6.5%
Transients with Main Feed Initially Available	1.5%
Interfacing LOCA	2.2%
Loss of Circulating Water	1.8%
Loss of RCP Seal Injection and Thermal Barrier Cooling	1.1%
Transients with Recoverable Main Feed Following Isolation	0.7%
Non-recoverable Loss of DC Bus 1B	1.3%
Non-recoverable Loss of DC Bus 1A	1.3%
Transients with Non-recoverable Main Feed Loss	0.6%
ATWS at Power Above 40%	0.5%
Reactor Vessel Rupture	0.4%
ATWS at Power Below 40%	0.0%
Steam Line Break Outside Containment	0.0%
Steam Line Break Inside Containment	0.0%

Other than fire and seismic events, the contribution of all the other external event hazards to core damage frequency have been qualitatively screened out. The fire-induced CDF is 6.3E-06 per year. The estimation of the seismic events contribution to CDF is currently being finalized.

3.2 SCOPE DEFINITION

The first step in the program is to define the systems to be evaluated in the scope of the program. Currently, the scope of this program is limited to nuclear plant piping. The piping boundaries of the plant PSA and the current ASME Section XI inservice inspection program Class 1, 2, and 3 examination boundaries are reviewed for possible inclusion in the scope of the program. The piping boundaries that are included in the plant PSA, but are outside the current ASME Section XI boundary, may also be included. The systems identified under the Maintenance Rule are also used to identify piping systems for inclusion in the scope of the program.

In addition to defining the systems to be included in the scope of the program, the piping structural elements to be included in the program are identified.

The scope should include ASME Class 1, 2 and 3 piping systems and various balance of plant (non-nuclear Code Class) systems. The systems were selected based on three criteria:

- All Class 1, 2, and 3 systems currently within the ASME Section XI program;
- Piping systems modeled in the PSA; or
- Various balance of plant fluid systems determined to be of importance (mainly based on Maintenance Rule ranking).

The Maintenance Rule scope definition provides a good starting point for the determination of the scope of the risk-informed ISI program because of the criteria applied to determine the systems which would be in scope (safety-related systems and non safety-related systems). The safety functions of the plant systems identified through the Maintenance Rule should be reviewed to ensure all plant safety functions have been appropriately considered for the scope

of the risk-informed ISI program. If a system does not meet the Maintenance Rule scope, it can be considered out of scope for this program and does not need to be further evaluated in detail.

A full scope program is recommended because a greater portion of the plant risk from piping pressure boundary failures is addressed in the risk-informed ISI program versus current ASME Section XI requirements since the examinations are now placed in several high-safety-significant piping segments that are not currently examined by the current Section XI approach. However, a partial scope evaluation may be performed given that the evaluation includes a subset of piping classes, for example, ASME Class 1 piping only, including piping exempt from the current requirements.

Consistent agreement should be ensured between the PSA system boundaries and the ISI boundaries so that 1) there is a small likelihood of leaving out some important piping segments, 2) the appropriate failure probability is used with the appropriate consequence from the PSA, and 3) that there is a common understanding of the piping segment definition. For example, the PSA system boundary may extend beyond the current system (e.g., a system may include the piping to and from a heat exchanger that is actually classified on a plant drawing as another system) while the ISI plan applies that piping to the other system. When the segments are defined, the consistency will assure that this piping is included. The method suggested for maintaining this consistency is to use the controlled plant piping diagrams as the basis for the definition of the systems and boundaries.

Table 3.2-1 provides a list of the systems included in the scope of the program for the Millstone 3 application. This list was reviewed by the expert panel (Maintenance Rule panel supplemented by appropriate ISI-related disciplines) to determine its completeness for this application.

Twenty-one systems were selected to be evaluated in more detail for the representative WOG plant. The remaining systems are excluded from the scope of the risk-informed ISI program. These systems are not addressed by ASME Section XI but some were considered by the PSA (such as emergency diesel jacket water, containment instrument air, and instrument air). However, each of these systems was reviewed by the plant expert panel using the same criteria as in the determination of risk-significance for the Maintenance Rule. In addition, the

Table 3.2-1 MILLSTONE UNIT 3 RI-ISI SYSTEM IDENTIFICATION		
System ID	System	Basis
BDG	Steam Generator Blowdown	High Energy Line Break Concerns
CCE	Charging Pump Cooling	PSA (1)
CCI	Safety Injection Pump Cooling	PSA (1)
CCP	Reactor Plant Component Cooling	PSA & ASME Section XI
CHS	Chemical & Volume Control	PSA & ASME Section XI
CNM	Condensate	PSA (2)
DTM	Turbine Plant Misc. Drains	ASME Section XI (3)
ECCS	Emergency Core Cooling (4)	PSA & ASME Section XI
EGF	Emergency Diesel Fuel	PSA
FWA	Auxiliary Feedwater	PSA & ASME Section XI
FWS	Feedwater	PSA (2) & ASME Section XI
HVK	Control Bldg. Chilled Water	PSA
MSS	Main Steam	PSA & ASME Section XI
QSS	Quench Spray	PSA & ASME Section XI
RCS	Reactor Coolant	PSA & ASME Section XI
RHS	Residual Heat Removal	PSA & ASME Section XI
RSS	Containment Recirculation	PSA & ASME Section XI
SFC	Fuel Pool Cooling and Purification	PSA (5)
SIH	High Pressure Safety Injection	PSA & ASME Section XI
SIL	Low Pressure Safety Injection	PSA & ASME Section XI
SWP	Service Water System	PSA & ASME Section XI

Notes:

(1) Included in PSA boundary, but exempt by ASME Section XI pipe size

(2) Modeled indirectly in the PSA

(3) Drain lines from MSS listed because of ASME Section XI

(4) ECCS is a combination of piping segments which impact a number of systems - Charging, HPSI, LPSI, Quench Spray

(5) Not included in PSA internal events model, important to shutdown risk

consequences postulated from the loss of any of these systems from a pipe failure were determined not to be significant. Therefore, these systems, in their entirety, were determined to be outside the scope and not further evaluated. A sample is provided in Table 3.2-2.

Pipe segments in the systems listed in the table most likely will not contribute to CDF from pipe failures as segments in the in-scope systems. The systems are mainly secondary side systems that will only cause at most a reactor trip (e.g., stator cooling water failure) and support systems that support these secondary side systems (e.g., turbine plant component cooling water provides cooling to main feedwater and condensate). If a pipe segment in one of these systems were to fail, the plant would still be able to respond to the event. The hazards evaluation was also reviewed to identify if potential indirect (spatial) effects could be identified from these systems. None were identified.

Table 3.2-3 provides a list of systems included in the scope of the Surry pilot plant project. Eighteen systems were selected to be evaluated in detail in the risk-informed ISI program. One system (auxiliary steam) was added to the scope of the program based on the plant walkdown results and the indirect effects identified from piping failures in certain portions of this system.

The systems or portions of systems identified below were evaluated and excluded from system scope consideration in the risk-informed ISI program:

- Instrument Air (Compressed Air)
- Fire Protection System
- Containment penetration piping

The structural elements considered for the WOG applications included the examination items presently included under Examination Categories B-F, B-J, C-F-1, C-F-2 and D-A only as it relates to Class 3 piping systems that would be included under this category in the 1992 and later editions of ASME Section XI. The process also included evaluation of additional areas and volumes of base material and examination zones such as weld counterbore areas and fitting material with consideration to all piping welds to nozzles, valves and fittings such as tees, elbows, branch connections and safe ends. Welded attachments and piping supports were not included in the program. However, possible snubber degradation was given consideration as a factor which may increase piping fatigue effects.

Table 3.2-2 EVALUATION OF PIPING SYSTEMS FOR SCOPE EXCLUSION FROM THE RI-ISI PROGRAM FOR MILLSTONE 3		
System ID	System Description	Resolution
DSM	Moisture Separator Drains & Vents	Determined to be non-risk significant as part of the Maintenance Rule*
DSR	Main Steam Separator Reheater Drains and Vents	Determined to be non-risk significant as part of the Maintenance Rule*
EGD	Emergency Diesel Fuel Exhaust & Comb. Air	Determined to be non-risk significant as part of the Maintenance Rule
EGS	Emergency Diesel Jacket Water	Included with the Diesel Generator boundary in Maint. Rule; however, Expert Panel determined that the DG would function without this system but with slower start time. No need to evaluate.
ESS	Extraction Steam	Determined to be non-risk significant as part of the Maintenance Rule*
GMC	Stator Cooling Water	Determined to be non-risk significant as part of the Maintenance Rule
GMH	Generator Hydrogen & CO2	Determined to be non-risk significant as part of the Maintenance Rule
GMO	Generator Seal Oil	Determined to be non-risk significant as part of the Maintenance Rule
HDH	H.P. Feedwater Heater Drains	Determined to be non-risk significant as part of the Maintenance Rule*
HDL	L.P. Feedwater Heater Drains	Determined to be non-risk significant as part of the Maintenance Rule*
IAC	Containment Instrument Air	Determined to be non-risk significant as part of the Maintenance Rule
IAS	Instrument Air	Determined to be non-risk significant as part of the Maintenance Rule
SWT	Traveling Screen Wash & Disposal	Determined to be non-risk significant as part of the Maintenance Rule
TMB	Turbine Control System	Determined to be non-risk significant as part of the Maintenance Rule
CCS	Turbine Plant Component Cooling	Determined to be non-risk significant as part of the Maintenance Rule*

* In addition, based on the outcome of the Feedwater, Condensate, SG Blowdown and Main Steam System piping segments evaluation, these other systems are considered bounded by these evaluations which determined all segments to be low safety-significant.

Table 3.2-3 SURRY UNIT 1 RI-ISI SYSTEM IDENTIFICATION			
	System Description	PSA	Section XI
1.	AFW - Auxiliary Feedwater[3]	Yes	Yes
2.	BD - Blowdown (S/G)	Yes	Yes[1,2]
3.	CC - Component Cooling	Yes	Yes[2]
4.	CH - Chemical & Volume Control[4]	Yes	Yes[2]
5.	CN - Condensate	Yes	Yes[2]
6.	CS - Containment Spray	Yes	Yes
7.	CW - Circulating Water	Yes	Yes[2]
8.	EE - Emergency Diesel Fuel Oil	Yes	No
9.	FC - Fuel Pit Cooling[6]	No	Yes[1]
10.	FW - Feedwater[3]	Yes	Yes[2]
11.	MS - Main Steam	Yes	Yes[2]
12.	RC - Reactor Coolant	Yes	Yes[2]
13.	RH - Residual Heat Removal	Yes	Yes
14.	RS - Recirculation Spray	Yes	Yes
15.	SI - Safety Injection[5]	Yes	Yes
16.	SW - Service Water	Yes	Yes[2]
17.	VS - Ventilation[7]	Yes	Yes[1,2]
18.	AS - Auxiliary Steam[8]	No	No

Notes:

1. System is exempt from current ASME Section XI examination requirements (Volumetric, surface, visual (VT-3)).
2. Portions of this system are not included in the Section XI ISI program.
3. Surry combines the feedwater and auxiliary feedwater systems on the system drawings.
4. Portions of the chemical & volume control system work in conjunction with high head safety injection.
5. Includes high head (HHI), low head (LHI), the passive accumulator (ACC) portions of safety injection, and piping common to these systems (ECCS).
6. Important during shutdown.
7. Cooling water to control room HVAC.
8. Considered only for indirect effects.

3.3 SEGMENT DEFINITION

In order to evaluate the importance of the piping contained in each system, piping segments were defined. Piping segments can be defined on many levels: piping between welds; train level piping, etc. The approach used to define piping segments was based on:

- Piping which has the same consequence as determined from the plant PSA and other considerations (e.g., loss of train A of residual heat removal (RHR), loss of refueling water storage tank (RWST), inside or outside containment consequences, etc.);

- Where flow splits or joins (traditional PSA modeling points);

- Includes piping to a point in which a pipe break could be isolated (e.g., check valve, motor-operated or air-operated valve, but no credit for manual valves). Credit for isolating a break with manual valves, in general, is not taken because it is assumed that the manual valve is not accessible due to the pipe failure. However, situations may occur where manual valves can be used to isolate a failure by plant operators and in these cases the decision for crediting manual valves is made by the plant expert panel and documented as such; and

- Pipe size changes.

Check valves, motor-operated valves, hydraulically-operated valves and air-operated valves are the valve types that define discontinuities. These valves types are expected to reduce the consequences of the failure or isolate the failure either automatically or by operator action from the control room. Credit for the operator action from the control room is not credited in the "No Operator Action" ranking.

Check valves are generally only credited to prevent backflow (additional flow diversion) and usually the failure mode considered is failure to remain closed or close (with a force acting upon the valve to close) when a pipe failure occurs. The likelihood of such a failure is expected to be small. Crediting check valves for segment definition should not be significant since it is only postulated as the segment endpoint instead of where pipes joined or split.

Since check valve failure likelihood is small and the consequences from the failure in most instances will not change, multiplying the check valve failure probability by the piping failure probability and the conditional core damage frequency is not expected to be significant for the majority of the piping segments.

Automatic isolation valves are assumed to close if the pipe failure in question would create a signal for the valves to close. Containment isolation valves should be carefully considered for segments which contain the containment penetrations. If the segment consequences are significantly different assuming an automatic and/or containment isolation valve failure, then the piping segment definition should be reviewed and if necessary, the piping segment should be further combined or subdivided such that the failure of the valve, under pipe failure conditions, would be considered in conjunction with the change in consequences.

Thus, a piping segment is primarily defined as a portion of piping for which a failure at any point in the segment results in the same consequence. Distinct segment boundaries are identified at such branching points or size changes where there could be a significant difference in consequence, or the break probability is expected to be markedly different due to material properties. The consequences that should be considered are defined in the next section. The segment definition process is an iterative process with the determination of the consequences and identification of any potential operator recovery actions.

An example of a system and its defined piping segments is shown in Figure 3.3-1. In this example, the ECCS segments are defined. ECCS segment 1 is defined as piping between check valve 8847A (from the RHR pumps), check valve 8819A (from the HPSI pumps) and check valve 8818A (which isolates this pathway from the accumulator pathway). This piping segment is postulated to result in a loss of RWST inside containment resulting in an earlier transfer to recirculation and loss of high and low pressure safety injection to one cold leg. Similarly, segments 2, 3, and 4 are defined for the other injection points into the RCS cold legs. ECCS piping segment 5 (6, 7, and 8) is defined as piping between check valves 8847A, 8956A, and 8948A. These piping segments are postulated to result in loss of RWST inside containment resulting in an earlier transfer to recirculation and a loss of high and low pressure injection and accumulator injection to one cold leg. The ten-inch RCS piping downstream of check valve

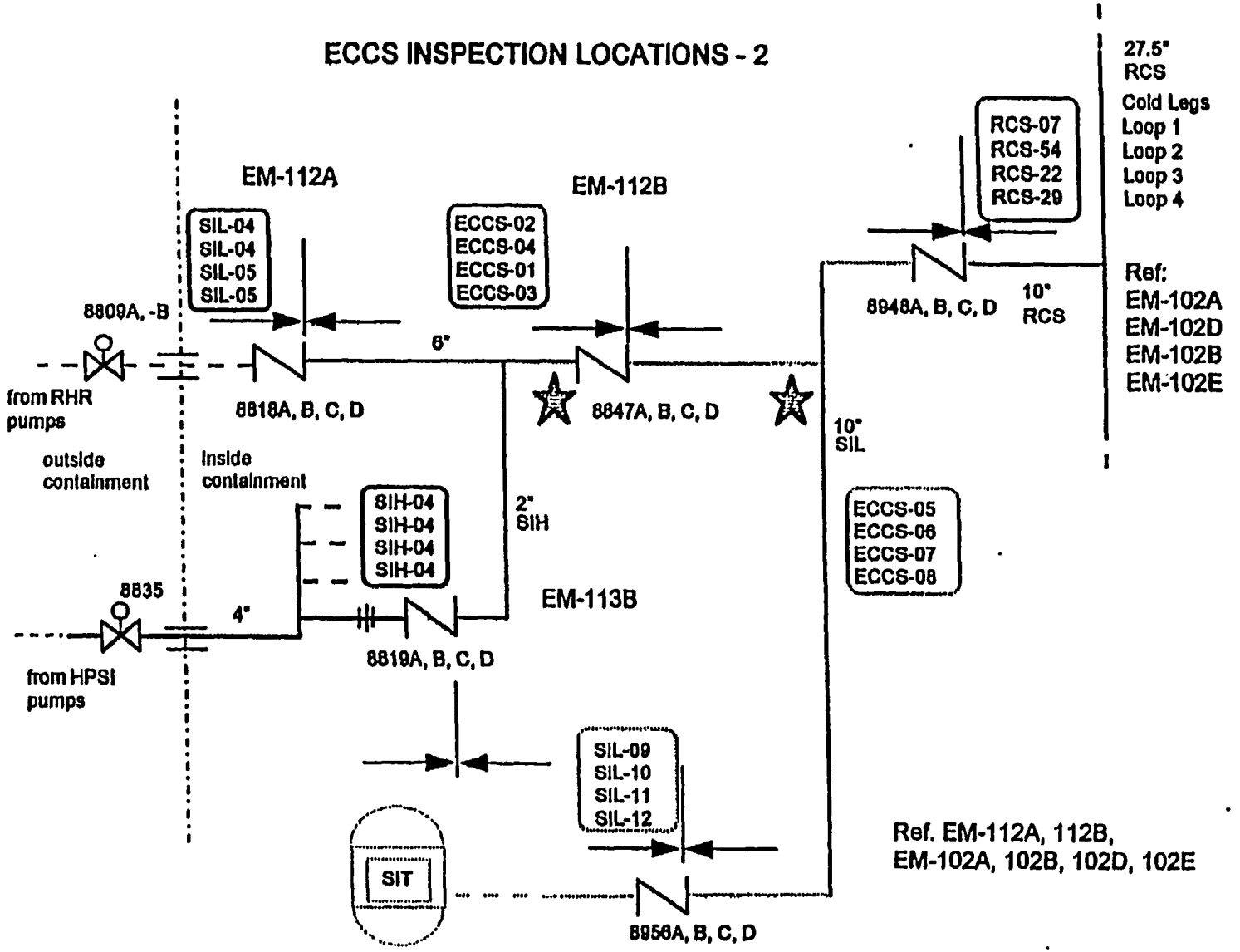

Figure 3.3-1 Example of Piping Segments

Note: The * indicates the selected location for the failure probability estimation described in Section 3.5.

8948A and the main reactor coolant loop piping defines other segments that are postulated to result in a large loss of coolant accident (LOCA).

For the Millstone 3 plant, the total number of segments defined and the systems are shown in Table 3.3-1. Table 3.3-2 shows the number of piping segments defined for Surry Unit 1.

3.4 CONSEQUENCE EVALUATION

The consequence from a pressure boundary failure should focus on safety consequences. Nevertheless, economic consequence can also be a secondary consideration resulting in additional inspection locations chosen to reduce economic risk. A risk-informed evaluation may go beyond the ASME BPVC and regulatory requirements for inspections and thereby also improve plant reliability and availability factors.

In many risk-informed applications, safety consequence has been measured in terms of core damage and large early release. These measures should also be applied for risk-informed inspection. The impact on core damage due to pressure boundary failures can be both direct and indirect. A direct consequence would be the loss of a system, whereby the ruptured pipe can no longer provide fluid flow that is essential to the safe shutdown of the plant. An example of an indirect consequence may be a disabling of a critical electrical component by flooding associated with a ruptured pipe.

3.4.1 Direct Consequences

PSAs can be used to gain insights into the consequences of pressure boundary failures. The direct effects to be considered include:

- Failures that cause an initiating event such as a LOCA or reactor trip
- Failures that disable a single train or system
- Failures that disable multiple trains or systems
- Failures that cause any combination above

Table 3.3-1 NUMBER OF SEGMENTS DEFINED FOR MILLSTONE 3	
System	Number of Segments
BDG (SG Blowdown)	4
CCE (CHS Cool)	2
CCI (SI Cool)	with SIH
CCP (CCW)	14
CHS (CVCS)	23
CNM (Condensate)	with FWS
DTM (Turbine Plant Drains)	with MSS
ECCS*	9
EGF (DG Fuel)	4
FWA (Aux Feed)	15
FWS (Feedwater)	19
HVK (Control Bldg Chilled Water)	1
MSS (Main Steam)	30
QSS (Quench)	5
RCS	66
RHS (RHR)	with SIL
RSS (Recirc)	11
SFC (Fuel Pool)	4
SIH (HPI)	10
SIL (LPI)	13
SWP (SW)	29
TOTAL	259

* ECCS system was created to capture piping common to several systems including SIH, QSS and SIL.

Table 3.3-2 NUMBER OF SEGMENTS DEFINED FOR SURRY UNIT 1			
System	Number of Segments	System	Number of Segments
ACC	15	FC	9
AFW	32	FW	20
AS	2	HHI	27
BD	12	LHI	18
CC	66	MS	38
CH	44	RC	96
CN	9	RH	11
CS	16	RS	13
CW	16	SW	54
ECCS	8	VS	2
EE	7		
		TOTAL	515

The initial focus for the consequences should be related to the events considered in the PSA internal events scenarios. Table 3.4-1 provides an example of the direct consequences postulated for several piping segments, considering possible operator actions and their impact on the consequences.

3.4.2 Indirect Consequences

The purpose of evaluating indirect consequences is to identify potential indirect effects/ consequences from piping failures that would differentiate piping segments from each other in the risk evaluation.

PSAs can be applied to establish indirect or spatial consequences, once detailed knowledge of those plant systems and components (if any) affected by the pressure boundary failure are identified. Indirect effects evaluations include consideration of pipe whip, jet impingement spray, high environmental temperatures and flooding. The information sources that are considered to identify indirect effects include the plant hazard evaluation to meet the requirements of the NRC's Standard Review Plan, (including general design criteria such as GDC 4) the final safety analysis report (FSAR) and the PSA internal flooding events analysis. In addition, the expert panel may provide input on indirect consequences. The impact of the indirect effects to be considered should be the same as stated above for the direct effects. A plant walkdown of key areas should also be conducted. The results of the evaluation are documented and reviewed and then the consequences are mapped to the appropriate piping segments.

The process used for conducting the evaluation is described below:

<u>Information Collection</u>

Existing documents which examine the local effects of piping failure for the systems included in the scope are reviewed (including the internal flooding evaluation performed as part of the plant's PSA). Other systems/trains affected by a pipe failure in the area should be identified from the plant hazards evaluation, the PSA flooding analysis, and plant layout drawings. The plant layout drawings, for areas not covered by the documentation review, are also examined.

Table 3.4-1 EXAMPLE CONSEQUENCES FOR PIPING SEGMENTS FROM MILLSTONE 3			
Segment ID	Segment Description	Postulated Consequence (without operator action)	Postulated Consequence (with operator action)
ECCS-0	RWST to flow split to LPSI, HPSI, and Charging - MOVs 8812A, 8812B, LCVs 112D, 112E, V8884 and MOV 8806	Loss of RWST	Loss of RWST
ECCS-1*	From CV8819C and CV 8818C to CV8847C	Loss of RWST**	Loss of all RHR and HPSI
ECCS-5*	Flow from SI CV 8847A and ACC CV 8956A to join to CV 8948A	Loss of RWST**	Loss of all RHR, HPSI and one accumulator
RCS-7	LPSI connection from Loop A cold leg tee to CV 8948A	Large LOCA with loss of HPSI, LPSI, and ACC injection to one cold leg	Large LOCA with loss of HPSI, LPSI, and ACC injection to one cold leg
FWS-1	Main feedwater flow from MOV35A to gate valve FCV510	Feedline break initiator	Feedline break initiator

* The only operator action which could be taken would result in closure of MV8835 (no HPSI to any paths) and closure of MV8809A or B (loss of 2 LPSI paths). However, given the short time available to take operator actions following a LOCA where LPSI is required, no operator action could be credited with closing MV8809A or B to save two injection paths. However, closure of MV8809A (or B) does result in preventing a loss of RWST.

** During the expert panel meetings, the postulated consequence (without operator action) was changed to a loss of RWST inside containment resulting in an earlier transfer to recirculation and the loss of one injection path. An operator recovery action could not be taken due to limited time and the difficulty in diagnosing the actual location of the break during a LOCA.

In addition, plant areas for which documentation is not clear, specific equipment is not listed, or modifications stated in previous reports that should have been made are identified.

Pre-Walkdown Evaluation

This analysis evaluates system interactions due to piping failures. The following potential pipe failure-induced conditions are considered:

- Flooding
- Water Spray
- Pipe whip
- Jet impingement

The first two conditions are usually analyzed in the internal flooding PSA assessment process developed to quantify the impact. The evaluation of the various areas of the plant conducted as part of the internal flooding evaluation (the evaluation before any quantitative screening is performed) is used to identify the impact of postulated flooding scenarios.

The evaluation of pipe whip and jet impingement is performed using the guidance provided below that is consistent with Westinghouse Systems Standard Design Criteria 1.19 (Westinghouse, 1980), WCAP-8951 (Mendler, 1979) U.S. NRC MEB 3-1 (NRC, 1987) and ANSI/ANS-58.2 (ANSI, 1988).

Pipe whip and jet impingement effects apply to breaks or ruptures that are postulated to occur in high energy piping systems, or portion of a system, where conditions such as the following are met during normal plant operating conditions:

- maximum operating pressure exceeds 275 psig, or
- maximum operating temperature exceeds 200°F

Piping systems that operate above these limits for only a relatively short duration (less than approximately 2%) of the time during which they perform their intended safety function, may be classified as moderate energy.

Existing documents, such as the UFSAR are reviewed to identify where high energy line break locations have already been postulated and where devices, e.g., whip restraints and jet shields, have already been installed to protect vital safety-related equipment.

Prior to the plant walkdown, the fluid conditions and the pipe sizes in the high energy piping of interest should be obtained in order to determine what length of pipe is required to form a hinge and the magnitude of the jet forces resulting from postulated breaks. The location of orifices that would limit the amount of energy emanating from a postulated break should also be identified.

The potential indirect consequences of pipe failure-induced damage (i.e., additional to the direct impact of piping failure) inside containment is assumed to be small on the basis that the susceptible accident mitigating equipment in the area is designed to withstand the worst case pipe failure and the resulting special conditions. The potential impact of these hazards on the safety important equipment has been addressed in the design of the plant. The containment structure and safety related components have been designed to meet the requirements of GDC-4. This should be verified as part of the process.

Walkdown

As part of the plant walkdown, documentation sheets should be developed to identify the specific concerns in each area and to facilitate the walkdown.

During the walkdown, for pipe whip and jet impingement, piping failures are assumed to occur at points along the high energy piping runs:

- circumferential breaks should be postulated to occur individually at pipe-to-fitting welds, branch run-to-main run welds, branch run-to-fitting welds, and at other terminal ends[2]; circumferential breaks need not be postulated in piping runs of a nominal diameter equal to or less than 1"

- longitudinal breaks should be postulated at welded attachments (e.g., lug, stanchion) at the centerline of the welded attachment with an area equal to the pipe surface area that is

[2] Terminal end is that section of piping originating at a structure or component (e.g., a vessel or component nozzle or structural piping anchor) which acts as an essentially rigid constraint to the piping thermal expansion. In-line fittings, such as valves, are not assumed to be anchored and are not terminal ends.

bounded by the attachment weld; longitudinal breaks need not be postulated in piping runs of a nominal diameter less than 4" and longitudinal breaks need not be postulated at terminal ends

During the walkdown, the following types of protection should be identified in the areas that could be impacted by these effects:

- Separation distances between required systems and components and piping that are used to mitigate potential consequences
- provision of piping enclosures
- provision of component enclosures
- provision of system redundant design features (such as isolation valves)
- design of required systems and components to withstand the effects of the postulated pipe failure
- provision of additional protection such as restraints and barriers

For high energy piping that has the potential to whip following a postulated failure, the following considerations should be noted:

- the portions of piping that may form a hinge will not become missiles
- a whipping pipe that has the potential to impact other piping will not rupture lines of equal or greater size; however, it should be assumed that a through-wall crack will develop in a line that is impacted by a whipping pipe of the same size

The evaluation of fluid jets emanating from postulated breaks on nearby structures and components should consider the effects of jet loading, fluid temperature and moisture on the targets impinged upon. The jet shape and direction should be established using the schematics

of jets discharging from various pipe breaks. Targets more than 10 pipe diameters away from the break location need not be considered for jet impingement impacts.

Participants in the Millstone 3 walkdown included team members from the PSA, piping, stress analysis, ISI, and operations groups. The walkdown covered the specific areas listed in Appendix A, Table A-1, in the ESF Building and the Auxiliary Building. The walkdown also included the intake structure for the circulating and service water pumphouse and the Turbine Building. An example of a walkdown worksheet documenting the information gathered is presented in Table 3.4-2.

Post-Walkdown Evaluation

The indirect effects resulting from pipe failures within the plant are identified. Hazards are identified for each area and potential targets within each area are also identified. The next task in the process is to match the pipe segments with the identified indirect effects. This task is performed by reviewing plant arrangement and piping drawings in conjunction with the segment definitions.

The walkdown results are documented for use in the risk-informed ISI program. For Millstone 3, the more significant findings of the walkdown were:

- Interactions of postulated AFW pipe breaks in the motor-driven auxiliary feedwater pump rooms can affect cable trays,
- Reactor plant component cooling water pipe breaks can affect one train of AFW,
- Pipe shrouds had been installed (as prescribed by the hazards evaluation) to mitigate the interactions of a postulated pipe break in one train of reactor plant component cooling water disabling the pump in the other train,
- Motor control centers in the service water pump cubicles could be affected by a service water pipe break, and
- Postulated pipe breaks in the turbine building would lead to a reactor trip, notably the turbine plant component cooling water system. Also, a break in the condensate pump discharge header could potentially disable all three plant air compressors.

A summary of the indirect effects identified at Millstone 3 are shown in Table 3.4-3.

Table 3.4-2
MILLSTONE 3 RISK-INFORMED INSPECTION
INDIRECT EFFECTS WALKDOWN WORKSHEET

Item #: 5 Building: ESF

Cubicle/Area: 011 Elevation: 21" - 6"

Indirect Effect of Concern: Loss of Train A equipment due to any pipe rupture in area (aux. feedwater suction or discharge piping), including a CCP pipe.

Components/Equipment in Cubicle/Area

System	Comp. Type	Tag No.	Train	Needed for Safe Shutdown?	Support System?
FWA	Pump	3FWA*PA	A	Y	N
FWA	Valve	3FWA*HV31D1	A	Y	N
FWA	Valve	3FWA*HV31A1	A	Y	N
FWA	Valve	3FWA*V42	A	Y	N
FWA	Valve	3FWA*AV61A3	A	Y	N
FWA	Valve	3FWA*AV23A3	A	Y	N
FWA	Valve	3FWA*HV31CB4	B	Y	N
FWA	Valve	3FWA*HV31C4	B	Y	N
FWA	Valve	3FWA*AV62B4	B	Y	N

Comments

Cable tray numbers listed in Hazards Evaluation did not match those marked on the overhead trays in the room. Additional checks needed.

Conclusions

Apparent discrepancy with cable tray identifiers noted. Hazards Eval. concludes pipe break will not target cable trays, but should further investigate effects of losing cable tray. No additional interactions found. Train B valves located away from postulated break locations. Pipe break will only affect FWA Train A. Need to consider the CCP interaction for inclusion in the segments analyzed.

1. Located at far side of room from unisolatable break
2. Near pump
3. Located at postulated break location
4. Located at far end of room away pump and postulated break

Table 3.4-3 SUMMARY OF INDIRECT EFFECTS FOR MILLSTONE 3		
Segment ID	Segment Description	Indirect Effect Consequence
CCP-13	Containment penetration cooler supply and return lines	Postulated break disables train A AFW pump due to spray
CCP-14	Containment penetration cooler supply and return lines	Postulated break disables train B AFW pump due to spray
FWA-1	Demin. water storage tank through motor-driven pump P1A to check valves V12 and V7	Postulated break may spray overhead cable tray - loss of HVAC to Train A RHR, QSS, and SI areas
FWA-4	Demin. water storage tank through motor-driven pump P1B to check valves V21 and V26	Postulated break may spray overhead cable tray - loss of HVAC to Train B RHR, QSS, and SI areas
FWA-12,-18	Check valves to cavitating venturi	Postulated break may spray overhead cable tray - loss of HVAC to Train A RHR, QSS, and SI areas
FWA-14,-16	Check valves to cavitating venturi	Postulated break may spray overhead cable tray - loss of HVAC to Train B RHR, QSS, and SI areas
SWP-1,-2	Service water pump discharge check valve to MOV	Flooding of other pump in area, loss of MCC which powers SW Train B equipment
SWP-3,-4	Service water pump discharge check valve to MOV	Flooding of other pump in area, loss of MCC which powers SW Train A equipment
SWP-13	Tee connection near CV 706B through SI pump cooler E1B and 3HVQ*ACUS1B & 2B	Spray could result in a loss of MCC in ESF Room which powers valves needed for operation of one train of recirc.
SWP-15	Tee connection near V63 through cooler CCE-E1B	Postulated break disables both trains of charging due to loss of train B charging pump cooling from the break, and loss of train A charging pump cooling from spray on the train A cooling water pump
SWP-20	Tee connection near CV 705 through SI pump cooler E1A & E2A and residual heat removal vent units ACUS1A & ACUS2A	Spray could result in a loss of MCC in ESF Room which powers valves needed for operation of one train of recirc.

Table 3.4-3 (cont.) SUMMARY OF INDIRECT EFFECTS FOR MILLSTONE 3		
Segment ID	**Segment Description**	**Indirect Effect Consequence**
SWP-22	Tee connection near V31 through cooler CCE-E1A	Postulated break disables both trains of charging due to loss of train A charging pump cooling from the break, and loss of train B charging pump cooling from spray on the train B cooling water pump
SWP-26,-27	Service water pump to CV and back to pump.	Flooding of other pump in area, loss of MCC which powers SW Train B equipment
SWP-28,-29	Service water pump to CV and back to pump.	Flooding of other pump in area, loss of MCC which powers SW Train A equipment

Additional information on the walkdown performed at Millstone 3, examples of completed walkdown worksheets, and a discussion of the major findings for the Millstone 3 plant walkdown are included in Appendix A.

For Surry, Table 3.4-4 identifies the key areas and postulated indirect effects. Appendix A includes additional information from Surry.

3.5 FAILURE MODES AND FAILURE PROBABILITY ESTIMATION

Once the consequences for each segment are defined, the failure probability for a postulated pipe failure and pipe leak must be determined. Information relating to the expected failure modes and causes, industry experience and plant specific characteristics are necessary inputs to this determination. These elements are discussed in the following sections and Figure 3.5-1 summarizes the process for this effort.

The intent of the failure probability estimation is to postulate the potential failure mechanism(s) for a given piping segment and then, based on the specific conditions for the given piping segment (not an individual weld in the piping segment) to provide an estimate of the failure probability for the piping segment, in order to differentiate the piping segments based on potential failure mechanism and postulated consequences. The failure probability of a segment is characterized by the failure potential (probability or frequency as appropriate) of the worst case situation in each segment (not a single selected weld in each segment). This is calculated by the SRRA code by inputting the conditions (typically, the most limiting or bounding) for the entire piping segment. Essentially, the piping failure probability is a representation or characterization of the piping segment.

3.5.1 Failure Modes and Causes

The number of possible degradation mechanisms and loading conditions is large (ASME 1992) and this section is not intended to provide a full treatment of the details of their occurrence. It does provide an overview of many typical mechanisms and describes the typical process by which they can be evaluated for a specific plant.

Table 3.4-4 SUMMARY OF INDIRECT EFFECTS FOR SURRY UNIT 1	
Area	**Indirect Effect(s)**
Auxiliary Building	Flooding/Spray The source of the flooding or spray is the low head to high head recirculation lines or the RWST piping supplying the charging pumps. Component Cooling pumps and the Charging pumps would be lost if no action were taken to isolate the ruptured line. High Energy The charging pump recirculation line and the discharge line were identified as the source of the jet impingement. MOVs 1-CH-MOV-1863A/B and 1-CH-MOV-1115B/D were identified as the potential targets in the charging pump cubicles. The loss of the 1A and 1B CC pumps is assumed to be the result of spray from the failure of either 4"-SLPD-50 or 6"-SA-21. Similarly, it was also determined that the four cables containing the power supply for CC pumps 1A, 1B and 1C as well as the power supply for Charging Pump 1C are subject to jet impingement. In one section of the AB basement the walkdown team concluded that the most manageable approach to indirect effects would be to assume that all of the PSA-credited equipment fails in its current state. Additionally three sections of blowdown system piping which could be subject to pipe whip resulting in the failure of smaller diameter pipe were identified.
MSVH/Safeguards	Flooding/Spray The source of the flooding or spray was identified by PSA flooding analysis as a break in the main steam lines or the main feedwater lines. The worst case flooding effect identified in this area is the loss of the steam generator PORVs, the Containment spray pumps and the auxiliary feedwater pumps along with propagation of the flood to the Auxiliary Building which results in a loss of the charging pumps and the component cooling pumps. High Energy A rupture of the bypass line (6"-SHP-45-601) could result in a failure of the decay heat removal path upstream of the isolation valve. The steam supply line to the TDAFW pump (3"-SHP-57-601) was postulated to fail the 3A motor driven AFW pump by severing the power cord. It is assumed that the equipment in this area fails as a result of a main steam or feedwater line break.

Table 3.4-4 (cont.) SUMMARY OF INDIRECT EFFECTS FOR SURRY UNIT 1	
Area	**Indirect Effect(s)**
MER 3	The most significant indirect consequence of piping rupture in this area is the partial loss of Control/Relay Room HVAC and Charging Pump SW pumps 1-SW-10B and 2-SW-10B.
Turbine Building	Flooding/Spray Loss of the ESGR due to flooding from the Turbine Building. High Energy Jet impingement from a high temperature line is postulated to cause the partial loss of offsite power. For any main steam or feedwater line break in the Turbine Building the team determined that the most manageable approach is to assume the MS and FW systems are lost.
MER 5	Flooding/Spray The only significant flood source is the Service Water supply to the ESGR chillers with potential to disable two of five trains of the backup chillers for the Control Room\Relay Room HVAC system.
ESW Pumphouse	Flooding/Spray The only flood source in this area is the SW system-related piping.

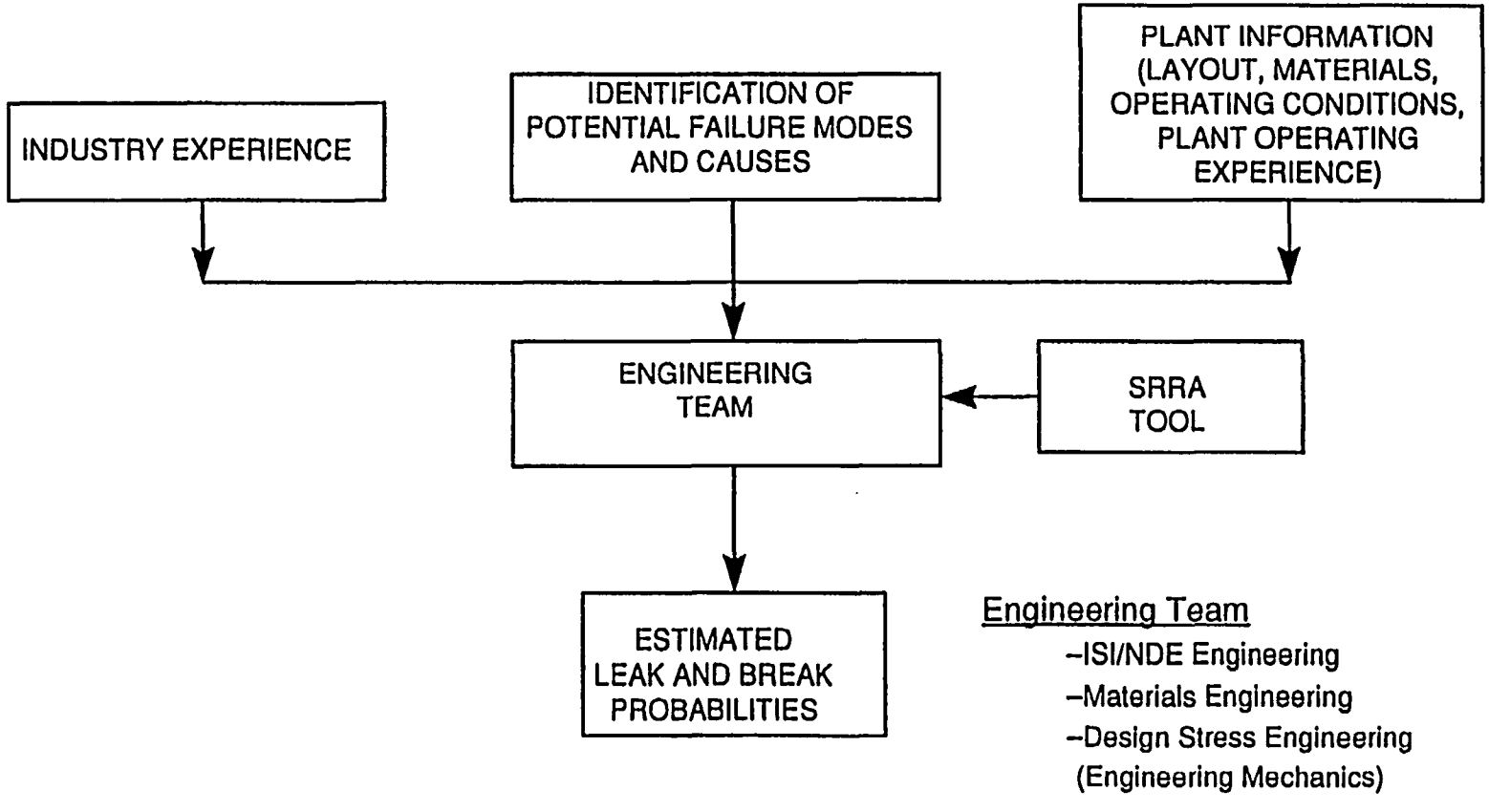

Figure 3.5-1 Failure Probability Estimation Process

The occurrence of a large pressure boundary failure may be considered a two stage process. In the first stage there is physical degradation of the piping element,[1] caused by pitting, crack growth, loss of wall thickness, loss of ductility, etc. The second stage comes into play when loading events occur that challenge the remaining structural integrity of the degraded element. Examples of the additional loads causing failure include pressure surges, water hammer, inadvertent thermal transients, earthquakes, and failure of a support. Some loadings occur randomly while others are related to system operation. Whether the structural failure is limited (causing a small or large leak) or unstable (causing a rupture) depends on the material properties, flaw configuration and nature of the loading. If the degradation mechanism is progressive, then eventually, normal operating loads within the design basis, such as a pump startup, may be sufficient to initiate a limited structural failure.

Based on the above discussion, the piping failure mode is either small or large leakage including rupture, depending on the combination of degradation mechanism and initiating loading. For this application, the specific failure event considered is a postulated failure of the pressure boundary that results in the loss of safety function for the piping segment. Leakage cracks may or may not precede the break. If the leakage could significantly affect the operation of the system or have significant indirect (spatial) effects, it is also considered a failure event.

For nuclear power plant components, conservative design practices have been successful in addressing most anticipated modes of failure. For example, the ASME Boiler and Pressure Vessel Code identifies the following modes of failure:

- excessive elastic deformation, including elastic instability
- excessive plastic deformation
- brittle fracture
- stress rupture/creep deformation (inelastic)
- plastic instability - incremental collapse
- high strain - low-cycle fatigue

[1] "Element" for this program includes straight pipe, elbows, tees, other piping components and their interconnecting welds.

The ASME Code rules for design and construction are generally considered effective in precluding these failure modes. It is generally believed within the nuclear industry, however, that other causes not anticipated in the original design are most likely to cause structural failures. The two most common examples are intergranular stress corrosion cracking (IGSCC) of stainless steel piping and erosion-corrosion wall thinning of carbon steel piping. The possibility of piping failure due to such unanticipated causes is the basic motivation underlying the ASME Section XI Code rules for inservice examination.

Table 3.5-1 lists a variety of failure causes that should be considered. It can be used as the starting point for a plant-specific evaluation; some listed mechanisms may be discounted while others may need to be added based upon plant-specific experience.

The table includes thermal fatigue as a single item representing several mechanisms such as thermal transients, flow stratification, striping and inadequate design flexibility. The dissimilar metal weld item is not a mechanism in itself but is a significant location for possible weld defects or inservice degradation due to other mechanisms.

Vibration fatigue is one degradation mechanism that can both degrade the structural element and help drive it to its ultimate failure. The issue with vibration is that if it occurs in its most severe form, it can cause failure within a matter of hours or minutes, and there are no precursor indications that can be detected prior to failure. However, the most severe vibration does not usually exist. The driving force may be unsteady in amplitude or frequency, or be intermittent. Also, the resonant amplification that usually contributes to the issue may vary with temperature, piping contents, or growth of any flaws. Vibration fatigue failure is therefore not always intermediate, and its fatigue cracks could in some cases be detected.

If vibration is determined to be a possible cause of failure, it must be determined if the piping inservice inspection program would be effective in identifying it prior to failure. In cases where significant vibration is known to be present in normal operation, it should be addressed through the normal technical problem resolution and design change process as it is unlikely that ISI programs will detect vibration fatigue cracking before failure occurs. If vibration is

Table 3.5-1 EXAMPLE FAILURE CAUSES FOR LWR NUCLEAR POWER PLANT PIPING COMPONENTS	
Erosion	Fatigue (high or low cycle)
Erosion	Mechanical
Erosion/Corrosion	Thermal
Mechanical wear	Vibrational
Fretting	Corrosion
Cavitation	Bulk corrosion
Embrittlement	Crevice corrosion
Irradiation	Pitting corrosion
Thermal aging	Galvanic corrosion
Corrosion/Cracking	Microbiologically influenced
Intergranular	Pitting
Transgranular	Mechanical Damage
Fabrication/Maintenance	Water hammer
Improper heat treatment	Improper or degraded supports
Improper repairs or alterations	Improper or degraded restraints
Dissimilar metal weld	External loads/impact

possible, but may continue for a significant time without discovery, then inservice examination for it will probably also be ineffective.

If the potential piping vibration is expected to be induced by equipment vibration (such as degraded pump bearing), and the equipment is operated only occasionally, then inservice examination for fatigue cracking may be effective if it is scheduled to follow equipment testing. For example, if a proposed examination location is at a safety injection pump discharge, then examination following scheduled pump testing may be effective.

After all the possible degradation mechanisms are considered, it may be judged that no degradation mechanism is credible for some segments. The piping is expected to retain its full strength and integrity for its entire operating lifetime. For such segments, the only conceivable

failure mode is the occurrence of loads greatly in excess of the design basis loads. An example of such a load may be a large mass being dropped on the pipe during nearby maintenance activities, or the occurrence of a greater than design basis earthquake that may shift equipment from its foundations. The failure mode for such segments is classified as "external loads" and such segments are retained in the overall process. When considering tees, elbows and other geometric discontinuities, the stress level is based on the available ASME calculations for the piping. Since the Code calculations include stress intensification factors or stress indices, the effects of stress concentrations are inherently considered. The risk assessment may determine the segment to be high safety-significant based only on the severity of its failure consequence. Any examinations ultimately scheduled for such segments would have the value of confirming that, indeed, no mechanism is active for that piping segment.

3.5.2 Review of Industry Experience

Known failures at other plants should be considered and evaluated for applicability. Available information sources include NRC and EPRI published documents regarding reported failures or operating occurrences, such as flow stratification, which may be applicable to plants. Other useful sources of information include: the Nuclear Plant Reliability Data System (NPRDS), Licensee Event Reports (LERs), NRC Nuclear Plant Aging Research (NPAR) reports, NUMARC (now NEI) Assessments of Plant Life Extension, ASME BPVC Section XI Task Group report on fatigue, NRC pipe crack studies, EPRI Materials Degradation and environmental effects studies, and EPRI/industry erosion-corrosion work.

3.5.3 Information Requirements

To properly evaluate possible failure modes for a given piping segment, specific system information is required. This includes: piping materials, system thermal operating modes (pressure, temperature, and number of cycles), the presence of any thermal transients, the presence of any extended system layup periods or intermittent system operation, system water chemistry, and previous ISI experience.

Plant operating experience should be sought including cracks, leaks, repairs, corrosion, valve leakage, vibration observed during normal operation or during test modes, pipe support issues (including snubber drag loads or lockup, spring hangers topped out or bottomed out), high steam condensate flows, and inadvertent or unexpected system transients.

The best source of qualitative information regarding piping operation and past history is typically the "system engineer" who has full responsibility for the design basis and maintenance of one or more assigned systems. Piping ISI program inspectors and engineers assigned to evaluate identified flaws are also good sources of information for active degradation mechanisms.

3.5.4 Considerations for Selection of Likely Failure Mechanism(s)

Selection of possible failure modes can have a significant influence on the estimated failure probability. One approach for identifying possible failure modes and locations is to classify the pipe segment along the following lines:

- Configuration dependent. This factor considers the effect of the piping layout and support arrangement. For example, piping with low flexibility for thermal expansion will experience high bending moments which will in turn drive crack growth.

- Component dependent. For example, socket welds have low resistance to sustained vibration. Elbows or the piping immediately downstream of valves, which add turbulence to the flow, are therefore locations susceptible to erosion-corrosion-wear.

- Materials/chemistry dependent. The IGSCC susceptibility of 304 stainless steel is the most common example. Dissimilar material welds are another example.

- Loads dependent. An example of this is the number of cycles seen by the system. Another example is piping where inadvertent operation may lead to water hammer events. Seismic events are also included under this category.

Interactions among the factors are of course common.

If more than one degradation mechanism is present in a given piping segment, then the limiting values for each mechansim should be combined so that a limiting failure probability is calculated for risk ranking. Component dependent failure modes are easily localized to a single or small number of locations. Materials dependent or operations dependent mechanisms are often present throughout the segment. In such cases, interactions with other effects must be considered for determining the most likely mechanisms. Load dependent failure modes would

typically involve undetected preexisting flaws or degradation that could fail under high loads. The high loads could arise from dynamic (seismic, water hammer) events, large thermal expansion loads (configuration dependent) not considered in the design analysis, or external loading.

3.5.5 Consideration of Other Piping Reliability Programs

There are several existing programs and activities that positively affect piping reliability. For example, the use of solvents containing chlorides is restricted to help prevent degradation of stainless steel piping. Another example is the set of restrictions on system operation that prevent loading the piping outside its design basis. A third is the regular walkdowns performed on piping by system engineers and plant equipment operators. A fourth example is the erosion-corrosion control program implemented for carbon steel piping at many plants. All of these programs provide a positive contribution to piping reliability. There are also periodic system performance tests that are designed to verify equipment performance but have an additional effect of demonstrating piping reliability.

The beneficial effects of such programs should be considered when estimating failure probabilities of piping elements. If the programs are not considered, the risk-informed inspections could become overly weighted to piping that is low safety-significant, compared to how the plant is actually maintained and operated. It is therefore a better practice to categorize the segments and select inspection locations and methods that clearly enhance safety by recognizing all of the effects of the existing programs used to ensure piping reliability.

These considerations apply most directly to piping affected by flow-assisted-corrosion (FAC). When properly implemented, the inspections, chemistry control, wall-thinning predictions and component replacements comprising the FAC program result in highly reliable piping. The maintenance of wall thickness above the minimums helps to ensure that failure is by leakage rather than catastrophic failure. Other mechanisms for failure may be present in some locations; therefore, the piping cannot be excluded altogether from the risk-informed inspection program. This piping should be reviewed to determine the most probable failure location for the other mechanisms and a failure probability should be calculated in a manner similar to piping unaffected by FAC.

It is important to recognize the distinction between risk-informed alternative ASME Section XI examinations and other examinations and monitoring performed under an augmented program. The alternative inspection program proposed pertains only to the ASME Section XI pipe weld examination program (Categories B-F, B-J, C-F-1, C-F-2, and applicable Class 3 and Non Class piping). Augmented examination requirements would remain unaffected. There may be cases where the risk-informed program identifies a piping segment not currently in an augmented program which may need to be added.

Typically, existing augmented programs such as FAC (E/C) remain unaffected by the categorization of piping segments. In these cases, segments identified as high-safety significant and requiring inspection will use augmented programs if they are applicable. For example, if a segment in the feedwater system turns up as high risk with the postulated failure mechanism as FAC, the procedure would require inspection of that segment in accordance with the station's FAC program.

The presence of the FAC degradation mechanism, however, should not be neglected. Since the FAC program is only intended to manage the wall loss and avoid catastrophic failure of the pipe, some pipe wall erosion can take place. The effect of this moderate wall thickness reduction (and any slight imperfections of program implementation) may be incorporated by selecting a "moderate" value for the material wastage parameter in the SRRA (structural reliability and risk analysis) failure probability estimation program (see Section 3.5.6 below). The program will thus determine the probability of failure (leak or break) considering FAC and all other relevant causative factors.

For example, at Millstone 3, pipe wall data developed during the last major inspection of the secondary side piping was reviewed for the condensate, feedwater, blowdown and main steam systems. In cases where there was active erosion indicated by the data, the level of material wastage was input as moderate. The measured rates were not input directly. For the service water system, the data on wall thickness wear rate was not readily available, so all locations were input having moderate wastage potential. In actuality, the existing programs for secondary side FAC and service water erosion ensure that there is adequate wall thickness for all operating loads. There is an active program to replace sections of pipe that are significantly degraded by erosion mechanisms. Additionally, extensive portions of the carbon steel service water piping have been internally coated with an epoxy material to protect the pipe wall from corrosion. Thus, these identified active mechanisms are adequately controlled and managed by the existing augmented programs.

If the proposed inspection locations are determined after ranking to be high safety-significant, inspections should be performed at the specified element. An evaluation may be required if there are any additional failure modes beyond the expected FAC wall thinning to ensure the FAC examinations are adequate. Other Code requirements such as inspector qualifications may need to be satisfied.

A similar approach may be taken with other degradation mechanisms for which mechanism-specific programs have been developed. Examples include programs to manage service water piping degradation due to erosion or microbiologically induced corrosion. When such programs are in place and determined to be effective, the failure probability estimation may take them into account. On the other hand, if credit for such programs is taken, then reevaluation of the affected segments must be performed when the programs are changed or discontinued.

3.5.6 Failure Probability Determination

Several approaches can be used to categorize and prioritized the likelihood of failure. A qualitative rating (high, medium, and low likelihood) can be used. However, a quantitative approach is used because it provides further refinement of these general categories.

The task of estimating component failure probabilities can be challenging. In most cases though, consideration of failure probabilities, however uncertain their estimated values, leads to a more effective allocation of inspection resources compared to present practices. Although individual values of calculated failure probabilities may have large uncertainties, the relative values (e.g., from location to location in a given piping system) and aggregate average values are generally much less uncertain.

There will inevitably exist some uncertainty associated with the calculated probabilities. This is because catastrophic structural failures rarely occur, and thus little historical data exists to validate calculated low failure rates. Where failures at higher rates do exist (stress corrosion cracking in BWR primary system piping and flow-assisted corrosion in balance-of-plant piping), the data is used to benchmark the calculated probabilities.

Some of the methods available for estimating failure probabilities include:

- Historical Data. A number of reports have been published, e.g., by Bush (1988), Jamali (1992), Thomas (1981), and Wright, et al. (1984), with estimates of failure probabilities for nuclear power plant systems and components based on the few occurrences of pipe and vessel rupture events that have actually occurred in related situations. This information is useful as benchmarks of estimates obtained from the other methods.

- Expert Judgement. Elicitation of expert opinion has gained acceptance as a means to quantify input to PSAs and risk-informed studies. A systematic procedure, as described by Wheeler, et al. (1989), has been developed for conducting such elicitations. Generally, the process calls for enlisting and training a suitable team of experts. The team provides responses to a collection of structured questions, allowing sufficient time for the experts to document their rationale. The ASME Research Risk-Based Inspection Development of Guidelines, Volume 2 - Part 1, Light Water Reactor Nuclear Power Plant Components (1992) provides details of this process along with example results for ISI. However, the expert judgement process can be laborious and require the use of several experienced people beyond utility personnel.

- SRRA Predictions. Structural reliability and risk assessment (SRRA) models are usually based on probabilistic structural mechanics methods to estimate failure probabilities for important components. SRRA estimates provide a higher level of detail than estimates based on historical data or expert judgment. Locations within a system with varying failure probabilities can be defined to focus ISI resources. SRRA models can also predict the progress of degradation and/or crack growth as a function of time while quantitatively accounting for the impact of random loadings, such as earthquakes. These trends can be useful for selecting appropriate intervals over the service life of the components for periodic ISI examination. Some SRRA models that have been developed, (e.g., by Chapman and Davers (1987) and by Bishop and Phillips (1993)), have been used in demonstration studies. These SRRA models have taken advantage of the experience with previous probabilistic models, such as the PRAISE Code, which was developed earlier by Harris, et al. (1981).

For the WOG plant applications, structural reliability and risk assessment (SRRA) tools were used to estimate the failure probabilities for the piping segments. The SRRA tools were originally developed by Westinghouse for Idaho National Engineering Laboratory (INEL) to

address the aging of passive components for NRC and Department of Energy (DOE) (Bishop and Phillips 1993) (used in the Millstone 3 application) and were modified specifically for piping risk informed ISI (Supplement 1) (used in the Surry Unit 1 application). The SRRA software is implemented as a suite of executable personal computer programs to specify input, calculate and plot failure probability of piping with time for the selected input values of key design, operational, and inspection parameters. The SRRA software uses Monte-Carlo simulation with importance sampling to calculate the probability of leak for type 304 or 316 stainless steel piping (due to fatigue crack growth and stress corrosion cracking) or for carbon steel piping (due to fatigue crack growth and loss of thickness due to wastage, such as flow-assisted-corrosion). The SRRA models are described in detail in Supplement 1 to this WCAP Report. It describes the latest changes to the SRRA models as well as discusses the code inputs, guidelines for selecting limiting locations and estimating failure probabilities, guidelines on expertise and information required, and sample outputs. Benchmarking of the SRRA code with failure data and the PRAISE code and the uncertainties in the calculated probabilities are also discussed in this supplement.

In cases in which the SRRA tool could not be applied (such as pipe segments containing copper-nickel material or pipe internally coated with epoxy), expert judgement should be used to provide a failure probability estimate.

Failures in a piping segment due to the dominating mechanisms are correlated, not independent, and the dependencies can not be specifically identified quantitatively. Piping welds in a segment are typically fabricated with the same materials and processes and subjected to the same types of operating conditions, such as flow medium, pressure, temperature, seismic loading. Since the types of potential degradation mechanisms would therefore be similar for the limiting welds in a segment, the weld failures would more correctly be characterized as correlated. Correlated means they would all have comparable trends, such as all being relatively high or low, but not both. The combining of all significant degradation mechanisms for the segment probability would be even more correlated than the individual locations with those mechanisms. Physically, the weld with the highest failure probability at a given time would be the one expected to fail first (either on demand or in response to a loading) and thus result in a piping failure in the segment. Since its probability is typically several orders of magnitude higher than those without the dominating mechanisms, the addition of all

of these lower independent probabilities would not significantly change the numerical value for the segment.

The use of leak and break probabilities, along with their associated consequences, is inherent in the risk-informed process of identifying what circumstances contribute most to the overall risk. Leak-before-break (LBB) is a deterministic conclusion that postulated large flaws remain stable and that expected leak rates will be detected with conservative margins. It is distinct from the SRRA leak and break predictions.

In 10 CFR 50 Appendix A, General Design Criteria (GDC) 4, LBB is given as an acceptable justification to waive rupture hardware requirements for the dynamic effects of postulated rupture. The GDC 4 context of LBB does not apply to the RI-ISI process because there is no request to waive a design requirement for the dynamic effects of a postulated accident. The requirement for GDC hardware is quite independent of ISI programs. For example, by GDC 4, a rupture restraint may be required even on a low safety significant segment; similarly, an ISI inspection may be required on a weld for which there is no GDC 4 required hardware. Given that the RI-ISI program will maintain or reduce expected leak and rupture rates, any underlying assumption in GDC 4 regarding reasonable piping reliability continues to hold true.

Table 3.5-2 identifies example piping segment small and full break failure probabilities for the representative WOG plant, Millstone Unit 3. The piping failure modes are either a through-wall crack (small leak) or limiting crack length for a large leak. Exceeding the flow stress in the remaining uncracked section (full break) during a design limiting event would also result in a large leak failure.

Typically, the probability of a leak is two to three orders of magnitude greater than that for a break. According to the Swedish SKI report on U.S. plant operating experience (SKI 1996), about 8% of the incidents were ruptures while the remainder were leaks or failures. The numbers are approximate, but they demonstrate that in most cases the leak is observed or detected before it progresses to a break. This result is expected given that piping materials are quite ductile. Now that the FAC mechanism is well understood by the industry and monitoring programs have been implemented, the number of ductile ruptures due to gross pipe wall thinning will be even smaller.

Table 3.5-2 EXAMPLE CALCULATED PIPE FAILURE PROBABILITIES FOR MILLSTONE 3 (Note 1)					
Segment ID	Segment Description	Failure Probability (Note 2)			
		Small Leak		Full Break	
		No ISI	With ISI (Note 3)	No ISI	With ISI (Note 3)
EMERGENCY CORE COOLING-ECCS					
ECCS-1	From CV 8819C and CV 8819C to CV 8847C	0 (6.4E-08)	0 (6.4E-08)	0 (2.3E-12)	0 (2.3E-12)
ECCS-2	From CV 8819A and CV 8819A to CV 8847A	0 (6.4E-09)	0 (6.4E-09)	0 (2.3E-12)	0 (2.3E-12)
ECCS-3	From CV 8819D and CV 8819D to CV 8847D	0 (6.4E-09)	0 (6.4E-09)	0 (2.3E-12)	0 (2.3E-12)
ECCS-4	From CV 8819B and CV 8819B to CV 8847B	0 (6.4E-09)	0 (6.4E-09)	0 (2.3E-12)	0 (2.3E-12)
ECCS-5	From CV 8847A and CV 8956A to CV 8948A	9.2E-09	8.7E-09	1.4E-13	1.4E-13
ECCS-6	From CV 8847B and CV 8956B to CV 8948B	0 (6.4E-09)	0 (6.4E-09)	0 (2.3E-12)	0 (2.3E-12)
ECCS-7	From CV 8847C and CV 8956C to CV 8948C	9.2E-09	8.7E-09	1.5E-15	1.5E-15
ECCS-8	From CV 8847D and CV 8956D to CV 8948D	1.4E-08	9.9E-09	7.5E-15	6.6E-15
MAIN FEEDWATER/CONDENSATE SYSTEM					
FWS-1	From MOV 35A to FCV 510	1.1E-03	6.2E-06	0 (3.5E-11)	0 (3.5E-11)
FWS-2	From FCV 510 and LV 550 to CTV 41A	1.1E-03	6.2E-06	0 (3.5E-11)	0 (3.5E-11)
FWS-13	From main feedwater pumps P1, P2A, P2B to MOVs 35A, B, C, D	1.4E-03	7.1E-05	2.5E-07	2.1E-08
FWS-18	From condenser pipe connections 3A, 3B, 3C to MOVs 49A, B, C	1.2E-03	1.7E-04	6.8E-07	2.3E-08

Note 1: Based on modifications to the SRRA model, these example failure probabilities are likely to change.

Table 3.5-2 (cont.) EXAMPLE CALCULATED PIPE FAILURE PROBABILITIES FOR MILLSTONE 3 (Note 1)					
Segment ID	Segment Description	Failure Probability (Note 2)			
		Small Leak		Full Break	
		No ISI	With ISI (Note 3)	No ISI	With ISI (Note 3)
REACTOR COOLANT SYSTEM - RCS					
RCS-7	LPSI connection from Loop A cold leg tee to CV 8948A	1.9E-06	1.3E-06	4.1E-09	3.4E-09
RCS-22	LPSI connection from Loop C cold leg tee to CV 8948C	1.9E-06	1.3E-06	4.2E-09	3.4E-09
RCS-29	LPSI connection from Loop D cold leg tee to CV 8948D	1.9E-06	1.3E-06	4.1E-09	3.4E-09
RCS-54	LPSI connection from Loop B cold leg tee to CV 8948B	0 (2.1E-08)	0 (2.1E-08)	1.2E-12	1.2E-12
HIGH PRESSURE SAFETY INJECTION					
SIH-4	From MOVs 8821A and 8821B to CVs 8819A,B,C,D	0 (2.2E-09)	0 (2.2E-09)	0 (8.1E-13)	0 (8.1E-13)
SIH-5	From MOVs 8920 and 8814 to RWST	5.4E-08	4.1E-08	1.2E-10	5.9E-12
LOW HEAD SAFETY INJECTION-SIL					
SIL-4	From MOV 8809A to CVs 8818A,B	0 (2.5E-08)	0 (2.5E-08)	0 (9.2E-12)	0 (9.2E-12)
SIL-5	From MOV 8809B to CVs 8818C,D	0 (2.5E-08)	0 (2.5E-08)	0 (9.2E-12)	0 (9.2E-12)
SERVICE WATER SYSTEM-SWP					
SWP-1	Service water pump P1D to MOV 102D and return to pump	1.7E-03	1.3E-04	2.6E-08	5.6E-11
SWP-2	Service water pump P1B to MOV 102B and return to pump	1.7E-03	1.3E-04	2.6E-08	5.6E-11
SWP-3	Service water pump P1C to MOV 102C and return to pump	1.7E-03	1.3E-04	2.6E-08	5.6E-11
SWP-4	Service water pump P1A to MOV 102A and return to pump	1.7E-03	2.6E-05	2.6E-08	3.2E-11
SWP-5	Service water pumps P1B & P1D discharge to MOV 54B, 54D, 71B and 50B	6.6E-05	8.8E-06	0 (3.7E-13)	0 (3.7E-13)

Note 2: Failure probability at end of life (see Supplement 1 for description of failure modes). For the cases in which 0 failures are predicted, the values in parentheses are those calculated assuming one half failure in 5000 trials, corrected for importance sampling.

Note 3: The failure probabilities shown "with ISI" reflect the inspection interval and inspection accuracy associated with the inspection method recommended for each respective location.

For Millstone, the full break failure probabilities without ISI were used in the calculations to determine the total segment core damage frequency. The small leak probabilities were used as part of a sensitivity study.

Although the SRRA code sometimes calculated very small full break probabilities, a minimum threshold pipe failure probability of 1E-08 was selected for use in the consequence calculations for Millstone 3. This value was used for piping segments in which a credible failure mechanism could not be postulated. This threshold was used to account for the possibility of an incredible pipe failure and to account for consequence-driven pipe segments.

Two sensitivities were conducted for Millstone 3 which address the effects of changing the piping failure probabilities used for the risk ranking calculations. One sensitivity, "Use of Leak Probabilities," used the calculated leak probability instead of the full break probability (with the truncation limit of 1.0E-08). The second sensitivity, "Use of Actual SRRA Failure Probabilities," used the SRRA calculated break probabilities (which ranged from 1E-09 to 1E-15) without the truncation limit. These sensitivities are discussed in the next section.

The methodology used in the Millstone 3 application focused primarily on the effects of pipe breaks. The risk-informed ISI work for the Surry pilot plant study has modified the methodology to examine leaks, disabling leaks, and full breaks. Based on the piping failure probabilities calculated for the Surry study, there are no probabilities used for the risk ranking calculations below 1.0E-08.

Table 3.5-3 provides example piping segment failure probabilities for small leak (through wall flaw) and large leak (system disabling leak) for Surry. The Surry failure probabilities are much higher than the probabilities calculated for Millstone 3 as a result of the changes to the SRRA model described in Supplement 1.

3.6 SELECTION OF ISI SEGMENTS

This section discusses how the segments are categorized into two risk categories: high safety-significant and low safety-significant. There are three phases to the risk categorization process: 1) application of the PSA to calculate the total pressure boundary core damage frequency (CDF) and LERF (if possible) and importance measures and evaluation of other PSA-related factors,

Table 3.5-3 EXAMPLE PIPE FAILURE PROBABILITIES FOR SURRY UNIT 1					
Segment ID	Postulated Failure Mode(s)	Small Leak Probability No ISI	Small Leak Probability With ISI	Large Leak Probability No ISI No Leak Detection	Large Leak Probability With ISI No Leak Detection
AFW-001	Corrosion	8.80E-03	8.80E-04	8.80E-03	8.80E-04
CC-025	Vibration fatigue	8.50E-02	8.19E-02	3.43E-02	3.30E-02
CH-021	SCC	1.22E-03	7.53E-05	6.00E-04	6.45E-07
CN-001	Wastage/water hammer	3.60E-01	3.60E-02	3.60E-01	3.60E-02
ECC-003	Thermal stratification	8.67E-04	9.35E-05	8.30E-04	2.91E-05
FW-012	Wastage	3.60E-01	3.60E-02	3.60E-01	3.60E-02
HHI-004C	Snubber locks up under TC	3.88E-05	2.76E-06	2.66E-05	9.14E-07
LHI-004	Fatigue	2.01E-05	7.48E-07	1.52E-05	1.17E-07
MS-033	Wastage	2.63E-02	2.63E-03	2.63E-02	2.63E-03
RC-016 Large LOCA	Striping/stratification	5.31E-04	1.70E-05	3.09E-04	5.52E-06
RC-016 Med LOCA	Striping/stratification	5.31E-04	1.70E-05	3.34E-04	6.35E-06
RC-016 Small LOCA	Striping/stratification	5.31E-04	1.70E-05	3.59E-04	7.00E-06
RC-058 Med LOCA	Fatigue	4.15E-05	3.20E-05	4.56E-05	2.81E-05
RC-058 Small LOCA	Fatigue	4.15E-05	3.20E-05	4.56E-05	2.81E-05
RH-003A	SCC/vibration fatigue	6.78E-02	1.52E-02	4.55E-02	8.19E-03
SW-004	Fatigue	1.00E-02	1.00E-02	1.00E-02	1.00E-02
VS-002	Vibration fatigue	6.63E-03	2.85E-03	8.69E-03	4.05E-03

2) integration of other deterministic considerations, and 3) expert panel evaluation. The segment risk-ranking process is shown in Figure 3.6-1.

3.6.1 Risk-Ranking

Because plant PSA models do not explicitly include piping pressure boundary failures except for LOCAs, Steam Generator Tube Rupture (SGTR), steamline/feedline breaks, and Reactor Vessel Rupture, another method for evaluating pressure boundary failures in terms of risk was required and is described below.

First, a means to determine the relative risk significance of piping segments was necessary. Because piping failure probabilities are low, if the total CDF (LERF) for all plant internal events is used, none of the pressure boundary piping components would be high safety-significant via RRW (all RRWs would be equal to 1.0). Thus, the PSA results will be useless in helping to determine where to focus priorities for piping ISI. Modeling the piping pressure boundary failures and then assessing the relative risk significance to a total CDF (LERF) related to just piping pressure boundary failures renders more meaningful results. Therefore, it was decided that the total CDF (LERF) used in the risk significance evaluation should only account for those associated with piping pressure boundary failures.

Secondly, how to determine the CDF (LERF) due to piping pressure boundary failures was evaluated. The inclusion of piping segments directly into the PSA models was considered but not adopted since: 1) the effort would be too labor intensive and 2) the pipe segment failure probabilities are sufficiently lower than already-modeled components, that the pipe segments would in all likelihood fall below the truncation limits used in quantifying PSA models. Therefore, the approach identified was to quantify the CDF (LERF) due to piping pressure boundary failures outside the PSA model but to use the plant PSA model as input. To determine the CDF (LERF) for each piping segment, a surrogate component (basic event or set of basic events, such as a pump or valve failure to function) or an initiator that is already modeled in the plant PSA is identified in which the consequence or impact on the CDF (LERF) matches the postulated consequence for the piping pressure boundary failure. The surrogate component is assumed to fail with a failure probability of 1.0 for use in obtaining the conditional core damage frequency (or probability). When choosing a surrogate component, care must be taken to account for the ways in which the component has been modeled in the PSA, including recovery actions which may have been modeled to restore the operability of the

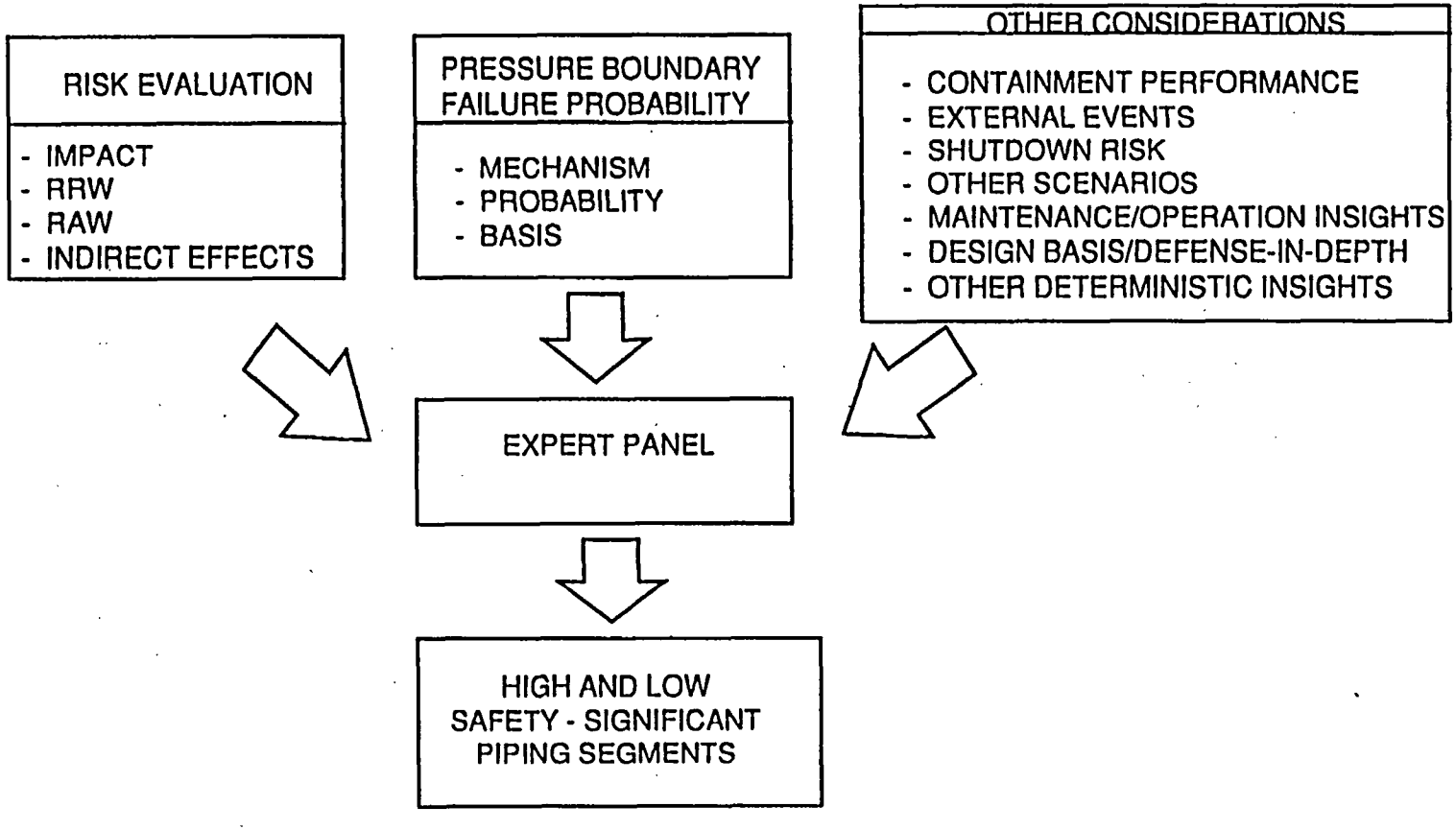

Figure 3.6-1 Pipe Segment Risk-Ranking Process

component. If the recovery action was determined to be inappropriate for the postulated consequence given a piping failure, the recovery action basic event should also be failed with a probability of 1.0. The conditional core damage frequency/probability results are combined with segment failure probability/rate to obtain the CDF (LERF) contribution for each segment. The CDF (LERF) contributions from all piping segments are then summed to obtain total piping pressure boundary failure CDF (LERF). The identification of a surrogate component(s) is usually possible unless the system was not modelled in the PSA. If the system is not modelled in the PSA, then other deterministic methods (operational considerations, shutdown risk, external events, design basis analysis, etc.) are used to evaluate the safety significance by the plant expert panel.

From this information, the risk importance measures can then be calculated to provide a relative ranking of piping segments.

In order to use the plant PSA as input to the pressure boundary failure CDF (LERF) calculations, the postulated consequences of the failure must be identified as described in previous sections.

Then based on the postulated consequences, the PSA model must be manipulated to obtain the required information. The consequences to be considered from both direct effects and indirect effects include:

- Failures that cause an initiating event such as a LOCA or reactor trip
- Failures that disable a single component, train or system
- Failures that disable multiple components, trains or systems
- Failures that cause any combination of the above

The process calculates the probability/frequency of a piping failure which could cause an initiating event or render a system incapable of performing its safety function and matches this with the consequences from the failure.

For a given segment, the general CDF (LERF) calculation would be:

$$P(CDF/LERF) = P(leak)*C(leak) + P(disabling\ leak)*C(disabling\ leak) + P(break)*C(break)$$

where P is the failure probability or rate and C is the consequence resulting from the piping failure. Depending on the piping failure consequences postulated, one or more terms of this equation may be used for a given piping segment.

Described below is guidance developed regarding the use of failure probabilities dependent on the type of consequences.

Consequence	Which Failure Probability to Use
Jet Impingement/Spray	Leak probability
Loss of system function	Disabling Leak or Full Break*
Initiating Event	Disabling Leak (causes plant trip) or Full Break*
Flooding	Disabling Leak or Full Break*
Pipe Whip	Full Break

* whichever is the higher failure probability.

Because the consequences can vary and the correct PSA and failure probability information is necessary for the CDF (or LERF) calculations, the process requires different manipulations for each type of consequence. The process is outlined in Figure 3.6-2. The same process is applied to calculate LERF. Different equations were developed to ensure the proper calculation for each type of consequence. Care must be taken to ensure that the correct units are applied both from the failure probability calculations and the core damage frequency (LERF) calculations to obtain a core damage frequency (in units of events per year) (or LERF) for each piping segment. The results of conditional core damage frequency/probability (or LERF) are combined with the results of the segment failure probability/rate to obtain core damage frequency (or LERF) for each segment. The different consequence calculations are described below.

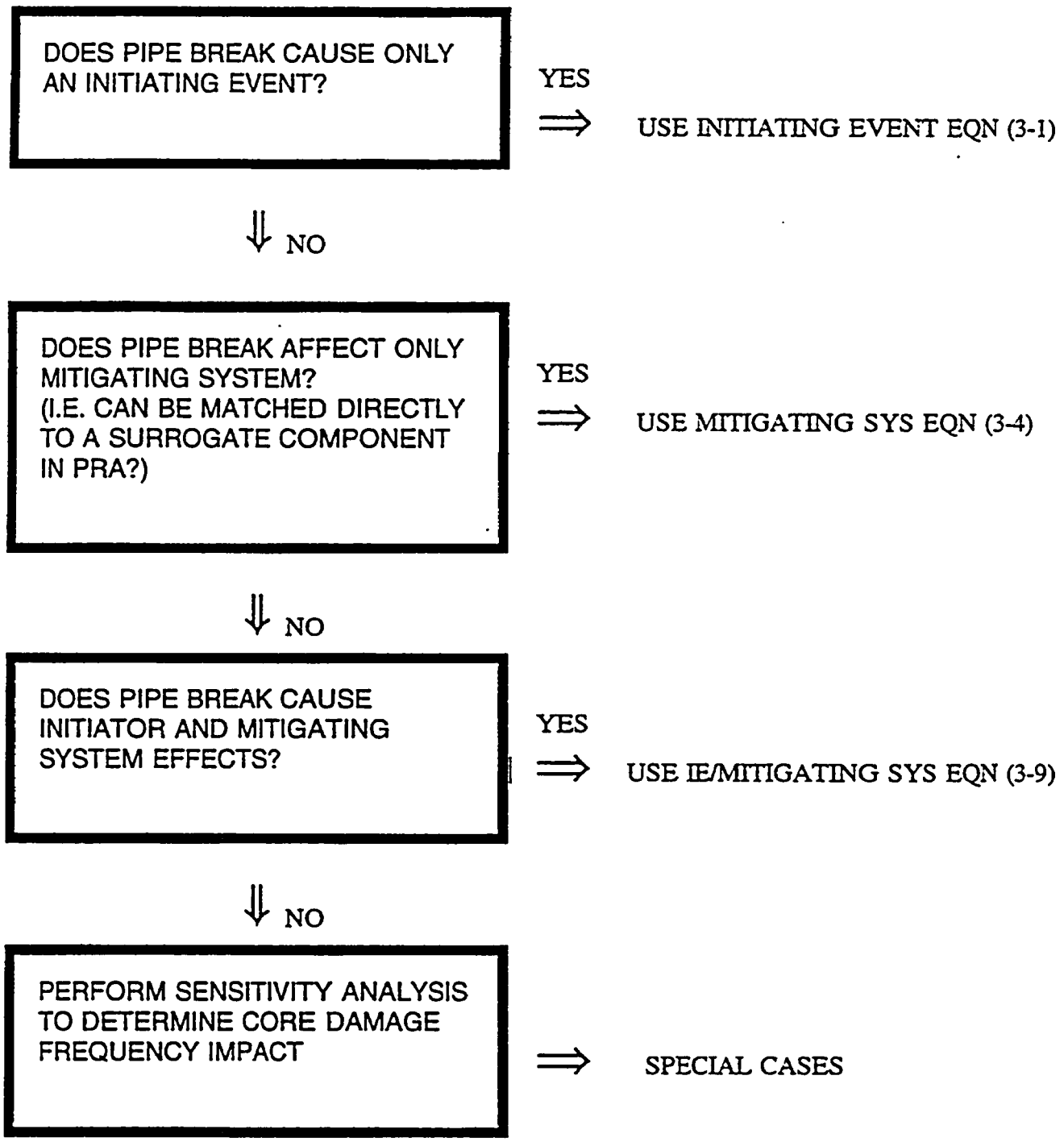

Figure 3.6-2 Core Damage Frequency Calculation Process*
***(also applied to LERF calculations)**

Initiating Event Consequence

For piping failures that cause an initiating event only, the portion of the PSA model that is impacted is the initiating event and its frequency. For a piping segment, the core damage frequency from the piping failure is calculated by:

$$CDF_{PB} = FR_{PB} * CCDP_{IE}. \quad (3\text{-}1)$$

where:

CDF_{PB} = Core Damage Frequency from a piping failure (events per year)

$CCDP_{IE}$ = Conditional core damage probability for the initiator

FR_{PB} = Piping failure rate assuming no ISI (in events per year)

The conditional core damage probability is determined from existing base PSA results. The core damage frequency contribution from the initiating event postulated for the piping failure is identified along with the base PSA initiating event frequency. Dividing the CDF by the initiating event frequency yields the conditional core damage probability as shown by:

$$CCDP_{IE} = CDF_{IE} / FREQ_{IE} \text{ (dimensionless)} \quad (3\text{-}2)$$

where:

CDF_{IE} = Base PSA Core Damage frequency from the initiating event (in events per year)

$FREQ_{IE}$ = Initiating event frequency from base PSA (in events per year)

Alternatively, the PSA model can be re-evaluated by changing the initiating event frequency to 1.0 and recalculating the conditional core damage probability for that initiator. An example of a piping failure resulting in an initiating event is the failure of a piping segment in the main feedwater system near the main feedwater pumps (that does not also cause a loss of auxiliary feedwater). This piping failure is equated to a loss of main feedwater initiating event. Given

that the base PSA CDF contribution from the loss of main feedwater is 7.67E-07 events/year and the initiating event frequency is 0.64 events/year,

$$CCDP_{IE} = CDF_{IE} / FREQ_{IE}$$

$$= 7.67E\text{-}07/year / 0.64/year$$

$$= 1.20E\text{-}06$$

Similarly, for a piping failure in the RCS which results in a large LOCA with a large LOCA CDF of 1.90E-06/year and an initiating event frequency of 2.03E-04/year, the conditional core damage probability is determined to be 9.36E-03.

The piping failure rate (in events per year) is obtained from the SRRA model assuming no ISI. Because the SRRA model generates a probability, the probability must be transformed into a failure rate. The cumulative failure probability at end of license is divided by the number of years at end of license. In other words,

$$FR_{PB} = FP_{PB}/EOL \qquad (3\text{-}3)$$

where:

FP_{PB} = Piping failure probability from SRRA model assuming no ISI (dimensionless)

EOL = Number of years used in SRRA model from beginning to end of license (usually assumed to be 40 years)

For a piping segment in the main feedwater system in which a failure probability from the SRRA model (no ISI) is identified to be 6.80E-07, the failure rate would be (6.80E-07/40 years) or 1.7E-08/year. Similarly, for a piping segment in the RCS in which a failure probability from the SRRA model is determined to be 8.38E-06, the failure rate would be (8.38E-06 / 40 years) or 2.10E-07/year.

Using the above information for both the conditional core damage probability and piping failure rate, the piping segment core damage frequency can be calculated. For the RCS piping segment described above, the core damage frequency from the piping failure is calculated by:

$$CDF_{PB} = FR_{PB} * CCDP_{IE}$$

$$= 2.10E\text{-}07/year * 9.36E\text{-}03$$

$$= 1.96E\text{-}09/year$$

For the main feedwater piping segment, the core damage frequency would be (1.70E-08/year * 1.20E-06) or 2.04E-14/year.

<u>Mitigating System(s) Consequence</u>

For piping failures that cause only mitigating system(s) degradation or loss, the core damage frequency for the piping segment is determined by the following equation:

$$CDF_{PB} = FP_{PB} * \Delta CDF_{PB} \qquad (3\text{-}4)$$

where:

CDF_{PB} = Core Damage Frequency from a piping failure (in events/year)

ΔCDF_{PB} = Change in CDF between segment failed and segment not failed (in events/year)

FP_{PB} = Pipe break failure probability (dimensionless)

To obtain the change in CDF, a surrogate component (basic event or set of basic events, such as a pump or valve failure to function) that is already modeled in the plant PSA is identified in which the consequence or impact on the CDF matches the postulated consequence for the piping failure. The surrogate component is assumed to fail with a failure probability of 1.0 to obtain a new total plant core damage frequency. In order to determine the change in core damage frequency for the piping segment only, the base total plant PSA CDF is subtracted from the new total plant CDF as shown by:

$$\Delta CDF_{PB} = CDF_{PB=1.0} - CDF_{BASE} \quad (3\text{-}5)$$

where:

$CDF_{PB=1.0}$ = new total plant CDF with surrogate component = 1.0 (in events/year)

CDF_{BASE} = base total plant CDF (in events per year)

Equation (3-5) is used to determine the conditional core damage frequency (or conditional LERF) for the mitigating system consequence. Because the failure of piping is not modeled in the PSA explicitly for mitigating systems (i.e., its probability of failure is implicitly set to 0), CDF_{BASE} is the appropriate term (the surrogate component failure probability should not be set to 0 since the surrogate component could still fail randomly at the failure probability included in the base model).

The following provides the failure probability equations for a system that is in continuous operation and for a system that is in standby.

Continuously Operating Systems Calculations for Mitigating System(s) Consequence

For systems which are continuously operating before an initiating event occurs and are required to respond to the initiating event, the unavailability calculation is:

$$FP_{PB} = FR_{PB} * T_m \quad (3\text{-}6)$$

where:

FR_{PB} is the failure rate (in events per unit time)

T_m is the total defined mission time (24 hours for most PRAs)

From the SRRA output, the failure rate (in hours) is estimated by:

$$FR_{PB} = FP_{EOL}/(\text{EOL years} * 8760 \text{ hrs/year}) \quad (3\text{-}7)$$

This equation should be used for those piping segments that are continuously under static pressure or are attached to storage tanks. The failure is identified by alarms and the segment unavailability is immediately recognized.

For example, for a Surry piping segment in the component cooling water system, the failure probability from the SRRA model (no ISI) is determined to be 7.37E-05. The failure probability (FP) would be (7.37E-05/40 years * 1 year/365 days) * (1 day) = 5.05E-09.

The conditional CDF is calculated by subtracting the base PSA CDF (7.23E-05/year) from the actual PSA run for the piping failure set to 1.0 (1.48E-03/year) to obtain the conditional CDF (1.48E-03/year - 7.23E-05/year = 1.41E-03/year). For the CCW piping segment described above, the core damage frequency from the piping failure is calculated by:

$$CDF_{PB} = FP_{PB} * CCDF_{PB}$$

$$= 5.05E\text{-}09 * 1.41E\text{-}03/year$$

$$= 7.11E\text{-}12/year$$

<u>Standby System Calculation for Mitigating System(s) Consequence</u>

Because of the way the SRRA models both the time dependent and demand based failures within the same SRRA model, there is not just one formula that would be accurate for all cases. From a mechanistic viewpoint, the probability of failure on demand depends on several factors:

- how the potential degradation mechanism progresses (whether time sensitive or load cycle sensitive)
- number of stress cycles seen in normal operation
- number of stress cycles seen in surveillance testing
- whether the mitigation demand presents a significant loading challenge to the piping
- whether there is a significant expectation of unidentified water hammer type loading and the probability of this event occurring during mitigation

The cumulative failure probability at end of life captures all of the contributing factors to the failure probability regardless of whether it is concentrated early or later in plant life. Therefore,

the cumulative failure probability is used as a time dependent element in the standard PRA equation described below.

To estimate a structural pressure boundary failure probability for a standby component, the following equation is used:

$$FP_{PB} = 1/2\,(FR_{PB})\,T_t + (FR_{PB})\,T_m \qquad (3\text{-}8)$$

where:

FR_{PB} is the failure rate (in events per unit time)

T_t is the interval between tests that would identify a piping failure

T_m is the total defined mission time (24 hours for most PRAs)

Due to the short mission time (24 hours), the second term is usually small.

This equation does not include any contribution for exposure time (allowable outage times (AOTs)) for several reasons:

- Operations will likely isolate the break, and the consequences may be different for this situation than for the situation in which the isolation does not occur (the consequences would be less severe in this state),
- The plant will likely be shut down given a disabling leak,
- The AOT time (generally 72 hours) will be small compared to the test interval for a majority of the segments,
- Given operator walkarounds occurring at least once per shift (every 8 hours), the exposure time would most likely be minimal, and
- The contribution to CDF from the occurrence of an initiating event during an AOT is small compared to other contributors.

However, for systems in which the AOT is on the order of magnitude of the test interval (T_t) such that the AOT is approximately (½ T_t)/2, or ¼ T_t, the contribution of unavailability expressed as (FR_{PB}) AOT should be added to right side of equation 3-8.

The piping failure may be detected by different types of tests and this should be taken into consideration when identifying the interval between tests. For example, some piping failures will be detected by monthly or quarterly pump surveillance tests; others will be detected only by full flow system tests occurring during refueling and still others will be detected only by a system pressure test which occurs every 10 years. As noted above for continuously operating systems, if the pipe is continuously under static pressure or is attached to storage tanks such that the failure is immediately recognized, then the continuously operating equation should be used.

For example, for a Surry auxiliary feedwater system piping segment (from motor driven pump P-3A to CV157), the failure probability from the SRRA code is determined to be 1.04E-02 and the corresponding test interval was identified to be quarterly (piping is assumed to be tested when the pump is tested). Using the above formula (3-8), the failure probability is:

$$FP_{TB} = \tfrac{1}{2}(FR_{TB})\,T_t + (FR_{TB})\,T_m$$

$$= [\tfrac{1}{2}(1.04E\text{-}02/40 \text{ years}) * (0.25 \text{ years})]$$

$$+ [(1.04E\text{-}02/40 \text{ years}) * (1 \text{ year}/365 \text{ days}) * 1 \text{ day}]$$

$$= 3.32E\text{-}05$$

As another example, for a Surry auxiliary feedwater piping segment (from MOVs 160A and 160B to check valves 309 and 310, from the opposite unit auxiliary feedwater system), the failure probability from the SRRA code is determined to be 3.58E-04 and the corresponding test interval was identified to be 10 years (segment is isolated and only tested every 10 years). Using the above formula (3-8), the failure probability is:

$$FP_{TB} = 1/2\,(FR_{TB})\,T_t + (FR_{TB})\,T_m$$

$$= [1/2\,(3.58E\text{-}04/40 \text{ years}) * (10 \text{ years})]$$

$$+ [(3.58E\text{-}04/40 \text{ years}) * (1 \text{ year}/365 \text{ days}) * 1 \text{ day}]$$

$$= 4.48E\text{-}05$$

The change in CDF is calculated by subtracting the base PSA CDF from the actual PSA run (3.15E-04) and the result is 3.15E-04/year - 7.23E-05/year = 2.43E-04/year. For the AFW piping

segment described above (from opposite unit AFW system), the core damage frequency from the piping failure is calculated by:

$$CDF_{PB} = FP_{PB} * \Delta CDF_{PB}$$

$$= 4.48E\text{-}05 * 2.43E\text{-}04/year$$

$$= 1.09E\text{-}08/year$$

<u>Initiating Event and Mitigating System Degradation Consequence</u>

For piping failures that simultaneously cause an initiating event and mitigating system degradation or loss, core damage sequences involving both events simultaneously must be evaluated. To evaluate this case, the event tree for the initiator which is impacted by the piping segment failure is used with the surrogate component for the mitigating system assumed to fail with a probability of 1.0. For piping failures that cause an initiating event and system degradation, the following equation is applied:

$$CDF_{PB} = FR_{PB} * CCDP_{IE,\,seg=1.0} \qquad (3\text{-}9)$$

where:

CDF_{PB} = Core Damage Frequency from a piping failure (events per year)

$CCDP_{IE,\,seg=1.0}$ = Conditional core damage probability for the initiator with mitigating system component assumed to fail

FR_{PB} = Piping failure rate (in events per year)

The conditional core damage probability for the initiator is determined by the following equation:

$$CCDP_{IE,\,seg=1.0} = CDF_{IE,\,seg=1.0} / FREQ_{IE} \qquad (3\text{-}10)$$

where:

$CDF_{IE,\,seg=1.0}$ = CDF from the initiating event with segment failed

$FREQ_{IE}$ = Initiating event frequency

For example, a piping failure in a segment in the charging system may result in a reactor trip and a loss of the RWST. A surrogate component for the RWST is assumed to fail with a probability of 1.0 and the reactor trip initiator event tree sequences are requantified to obtain the new core damage frequency for that initiator (an alternative would be to set both initiating event frequency and surrogate component to 1.0 and requantifying). For this example, the new CDF for the reactor trip initiator with the segment failed was determined to be 5.61E-03/year.

With an initiating event frequency of 3.38/year, the conditional core damage probability is:

$$CCDP_{IE,\,seg=1.0} = CDF_{IE,\,seg=1.0} / FREQ_{IE}$$

$$= 5.61E\text{-}03/year / 3.38/year$$

$$= 1.66E\text{-}03$$

Assuming that the piping failure probability is 1E-04, the failure rate is:

$$FR_{PB} = FP_{PB}/EOL$$

$$= [1.00E\text{-}04/40]$$

$$= 2.5E\text{-}06/year$$

The core damage frequency contribution can then be calculated as:

$$CDF_{PB} = FR_{PB} * CCDP_{IE,\,seg\,=\,1.0}$$

$$= 2.5E\text{-}06/year * 1.66E\text{-}03$$

$$= 4.15E\text{-}09/year$$

<u>Special Cases</u>

Not all piping segments fit into the three categories described above. Each piping segment is analyzed separately to determine the best method of calculation. Some segments may fall into several of these categories depending on the circumstance. For example, a failure in the piping segment in the main feedwater system is postulated to result in a reactor trip and subsequent loss of the main feedwater. This segment has two separate cases that are then added together

to obtain the total core damage frequency for that segment. First, the segment is modeled as a reactor trip and loss of main feedwater using equation 3-9 and then the segment is modeled as a loss of main feedwater for the remaining initiating events using equation 3-4.

The "special cases" do not address situations where a single segment failure is not adequately represented by a single surrogate. The "special cases" are used to address situations in which a piping failure can cause two different types of events depending on the timing of the event. For example, during normal plant operation, a pipe failure in the service water system may result in a reactor trip. However, if a reactor trip has occurred and the same service water system pipe failure occurs, it may be modeled as a mitigating system failure. These two cases are "independent" (both can not occur at the same time) and thus the calculations use this information.

<u>Total Piping Segment CDF (or LERF)</u>

For piping segments which have multiple impacts, the piping segment CDF is calculated using Boolean algebra. For a RCS segment, which is postulated to have potential consequences of a large LOCA (LL), medium LOCA (ML) or small LOCA (SL) depending on the size of the piping failure, the CDF is calculated by multiplying the failure rates for each piping failure based on its size by the probability of the postulated consequences as shown by:

$$CDF = FR_{LL} * CCDP_{LL} + FR_{ML} * CCDP_{ML} + FR_{SL} * CCDP_{SL}$$

For example, for a Surry CCW piping segment whose failure depending on the timing of the failure could result in either an initiating event or a system failure, the CDF for the system impact is 7.11E-12/year and the initiating event impact is 1.40E-12/year. Using this information, the total piping segment CDF is calculated as:

$$\begin{aligned} CDF_{segment} &= CDF_{IE} + CDF_{SYS} - (\text{joint probability} = CDF_{IE} * CDF_{SYS}) \\ &= 1.40E\text{-}12/\text{year} + 7.11E\text{-}12/\text{year} - (1.40E\text{-}12 * 7.11E\text{-}12) \\ &= 8.50E\text{-}12/\text{year} \end{aligned}$$

Modeling Insights and Conditions

It is not always possible to represent a pipe failure with a single component/event. Several basic events in the PSA model may be used to represent a pipe failure. For example, simulating the failure of piping around a pump may require that the failure probabilities for the pump and the modeled recovery action for restoring the pump be set to 1.0 to represent the pipe failure.

For example, for Surry, a PSA run was defined to quantify the consequences of a rupture in the following segments: RH-02, RH-03, and RH-03B. As a direct consequence of a piping failure in these segments, it was assessed that suction to RHR pumps will be lost. Here, this consequence is interpreted as the loss of both RHR pumps. No indirect impact was assigned to these segments. Based on a review of the PSA model, it was judged that logical failure of the 1RHPSB-CC-1RHP1 basic event will simulate the postulated consequence. The 1RHPSB-CC-HP1 represents common cause failure of both RHR pumps.

For the risk ranking calculations, the following conditions were judged appropriate:

- For piping segments that are included in augmented programs (such as erosion-corrosion and stress corrosion cracking programs), the SRRA failure probabilities with ISI but without leak detection are used

- For other piping segments, the failure probability without ISI and without leak detection are used

- The risk calculations are done for both 1) without operator recovery action and 2) with operator recovery action from the piping failure. The latter case assumes perfect operators, that is, no human error probabilities is included.

- For cases in which spray or jet impingement as an indirect consequence is the failure mode, the SRRA small leak (leak = through wall flaw) failure probability is used.

- For cases in which system failure as a direct consequence is the failure mode, the SRRA large leak (system function disabling leak) failure probability is used.

- For cases in which pipe whip as an indirect consequence is the failure mode, the SRRA full break (rupture) failure probability is used.

Total Pressure Boundary Core Damage Frequency (and LERF)

Each piping segment within the scope of the program is evaluated to determine its core damage frequency and LERF due to piping failure. Once this is completed, the total pressure boundary core damage frequency/LERF is calculated by summing across each individual segment. This now provides the baseline from which to determine the risk importance measures. The same process described for CDF can also be applied to determine the importance to LERF.

For Millstone 3, the total piping pressure boundary core damage frequency was estimated to be 2.28E-08/year with no operator action. The results by system are shown in Table 3.6-1. The piping CDF does not result in an increase in the total plant CDF for all events (5.87E-05 per year).

For Surry Unit 1, the total piping pressure boundary core damage frequency was estimated to be 6.28E-05/year (without operator action). Figure 3.6-4 shows the results for each case. The results by system for Surry are shown in Table 3.6-2 and Figure 3.6-3 (CDF and LERF with and without operator action).

Risk Importance Calculations

Risk categorization involves calculating the relative importance of a component to a pre-defined consequence measure, such as core damage frequency (CDF). Two importance measures are generally calculated for each component: Risk-Reduction Worth and Risk Achievement Worth Importance.

- Risk Reduction Worth (RRW) measures how much the core damage frequency will decrease if the unavailability of the component of interest is set to 0 (that is, the component is always available/perfectly reliable). The equation used to calculate RRW is:

$$RRW = CDF_{base} / CDF_0 \qquad (3\text{-}11)$$

Table 3.6-1 MILLSTONE 3 NUMBER OF SEGMENTS DEFINED AND PIPING CDF CONTRIBUTIONS BY SYSTEM[1]		
System	Number of Segments	At-Power Pressure Boundary CDF (events/year)
BDG (SG Blowdown)	4	1.61E-15
CCE (CCP Cool)	2	1.44E-11
CCI (SI Cool)	with SIH	
CCP (CCW)	14	2.25E-12
CHS (CVCS)	23	2.25E-09
CNM (Condensate)	with FWS	
DTM (Turbine Plant Drains)	with MSS	
ECCS	9	5.33E-10
EGF (DG Fuel)	4	3.21E-12
FWA (Aux Feed)	15	4.25E-09
FWS (Feedwater)	19	3.75E-14
HVK (Control Bldg Chilled Water)	1	4.21E-11
MSS (Main Steam)	30	3.20E-13
QSS (Quench)	5	4.79E-10
RCS	66	3.08E-09
RHS (RHR)	with SIL	
RSS (Recirc)	11	5.98E-10
SFC (Fuel Pool)	4	*
SIH (HPI)	10	2.66E-09
SIL (LPI)	13	2.39E-09
SWP (SW)	29	6.49E-09
TOTAL	259	2.28E-08

*Not modeled as part of at power PSA.

Note 1: Based on the modifications to the process, these results are likely to change.

Table 3.6-2 SURRY UNIT 1 NUMBER OF SEGMENTS AND PIPING RISK CONTRIBUTION BY SYSTEM					
System	Number of Segments	CDF No Operator Action	CDF with Operator Action	LERF No Operator Action	LERF with Operator Action
ACC	15	4.68E-11	3.06E-11	2.76E-11	3.81E-11
AFW	32	6.54E-6	2.59E-7	2.66E-7	1.28E-8
AS	2	7.84E-9	7.84E-9	7.85E-9	7.85E-9
BD	12	4.60E-7	4.60E-7	2.68E-7	2.68E-7
CC	66	2.34E-8	1.90E-8	1.97E-8	1.60E-8
CH	44	2.73E-7	2.73E-7	1.54E-9	1.54E-9
CN	9	1.20E-6	4.27E-8	6.74E-8	1.13E-9
CS	16	1.42E-7	9.74E-9	1.21E-8	2.17E-9
CW	16	1.00E-7	1.00E-7	2.79E-9	2.79E-9
ECC	8	9.78E-11	9.78E-11	8.08E-12	8.08E-12
EE	7	5.56E-10	5.56E-10	7.82E-12	7.82E-12
FC	9	N/A	N/A	N/A	N/A
FW	20	4.76E-7	4.75E-7	2.51E-8	2.51E-8
HHI	27	8.05E-7	1.71E-7	7.17E-8	1.88E-8
LHI	18	8.79E-8	1.44E-9	7.43E-9	5.02E-11
MS	38	4.25E-7	4.25E-7	1.03E-8	1.03E-8
RC	96	1.61E-6	1.60E-6	4.56E-9	4.54E-9
RH	11	6.54E-8	6.54E-8	6.55E-8	6.55E-8
RS	13	3.81E-9	1.58E-9	5.85E-12	0
SW	54	4.37E-5	1.43E-7	4.13E-6	1.02E-8
VS	2	6.84E-6	0	2.24E-7	0
TOTAL	515	6.28E-5	4.05E-6	5.18E-6	4.46E-7

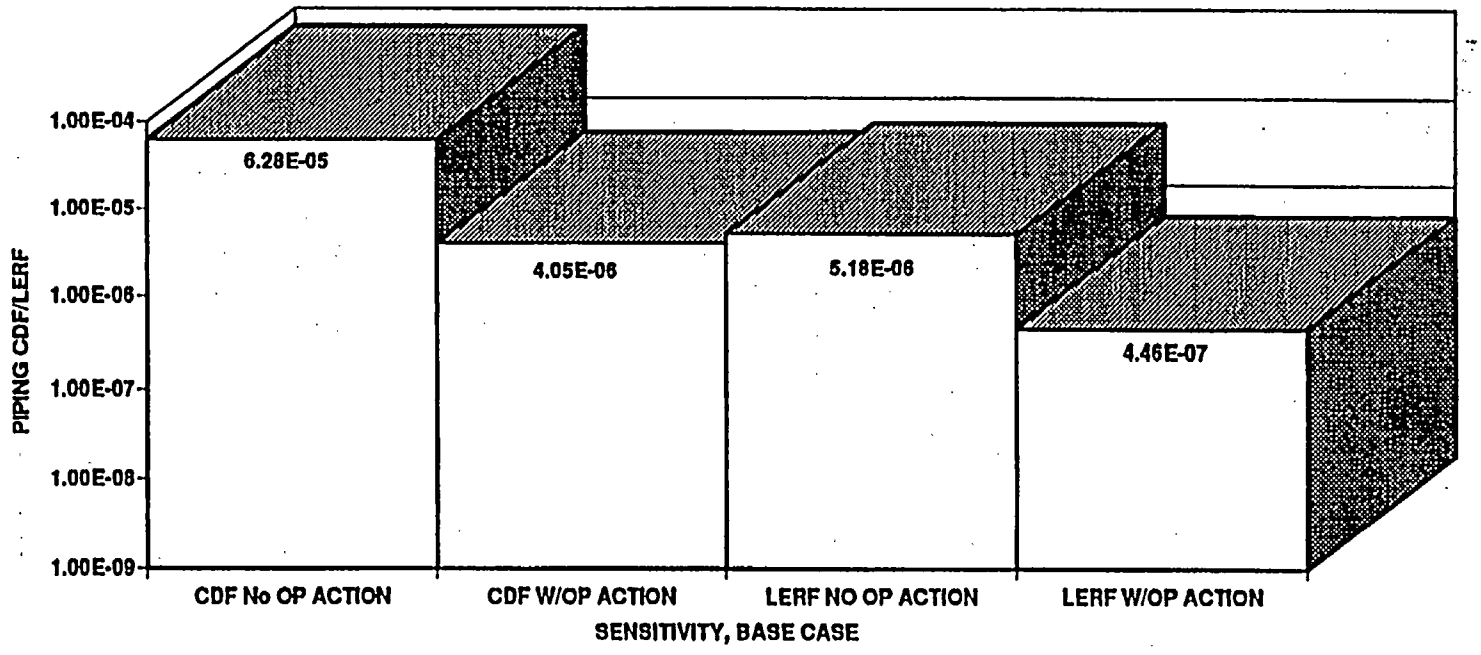

Figure 3.6-3 Surry Unit 1 Total Pressure Boundary CDF/LERF Results

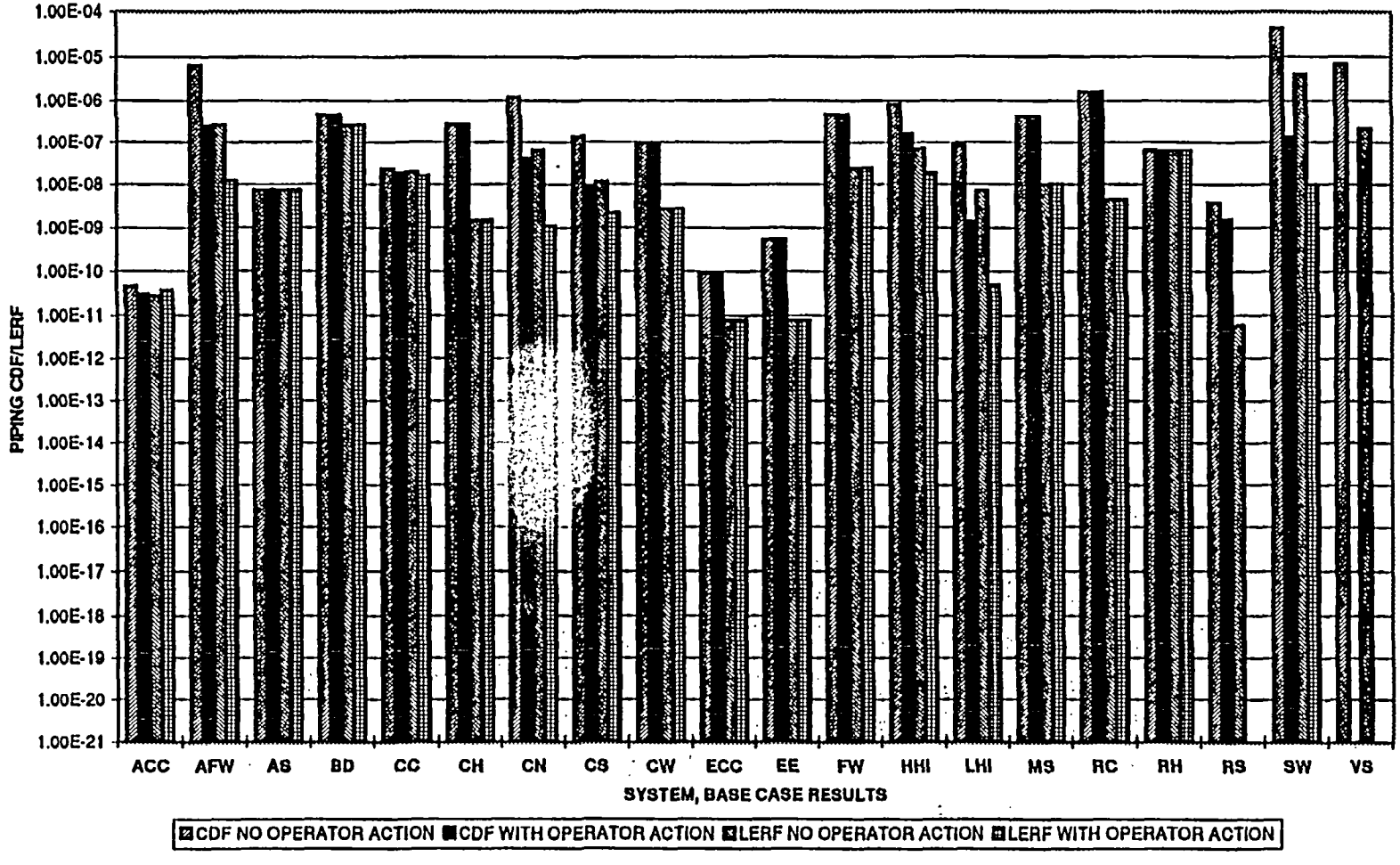

Figure 3.6-4 Surry Unit 1 Total Pressure Boundary CDF/LERF Results by System

where:

CDF_0 = Core Damage Frequency when the component failure probability is set to 0

CDF_{base} = Base Core Damage Frequency

- Risk Achievement Worth (RAW) measures the increase in core damage frequency when the component failure probability is set to 1.0. In other words, the RAW computes a increase in CDF when the component of interest is guaranteed to fail. The equation used to calculate RAW is:

$$RAW = CDF_1 / CDF_{base} \quad (3\text{-}12)$$

where:

CDF_1 = Core Damage Frequency when the component failure probability is set to 1.0

CDF_{base} = Base Core Damage Frequency

The RAW for initiating events is interpreted differently from the RAW for non-initiating events. The RAW for initiating events is calculated by essentially setting the frequency for initiating events to "1/yr" (the segment pressure boundary CDF is divided by the piping failure rate and then multiplied by 1/yr) and then dividing by the total pressure boundary failure CDF. This is used to identify the relative magnitude of the consequences to compare across segments that are postulated to result in an initiating event. Since RAW is used primarily as a secondary importance measure, this is judged to be acceptable.

Fussell-Vesely (F-V) Importance may be used in lieu of RRW because of the mathematical relationship between the measures. Fussell-Vesely Importance (F-V) measures the decrease in CDF if the components failure probability is set to 0.0. In other words, the F-V computes the decrease in CDF when the component of interest is perfectly reliable. The equation used to calculate F-V is:

$$F\text{-}V = (CDF_{base} - CDF_0) / CDF_{base} \quad (3\text{-}13)$$

where:

CDF_0 = Core Damage Frequency when the component failure probability is set to 0.0

CDF_{base} = Base Core Damage Frequency

In assessing the safety significance for the piping segments, RAW and RRW values are calculated. Piping failure probabilities are typically very small compared to other component failures modeled in the PSA. Therefore, when the failure probability is set to 1.0 for the RAW calculation, large RAW values typically result. Table 2.3-1 (based on the EPRI PSA Applications Guide) suggests that RAW values greater than 2 should be considered high safety-significant. This EPRI criteria was not used for the WOG applications because the majority of the calculated RAW values were above 2. Instead, the safety-significance determination focused on the RRW values, and RAW values were used on a relative basis to help differentiate segments which had similar RRW values. Segments are initially classified as high safety-significant if the RRW is greater than 1.005 for the CDF or LERF calculations with or without operator action. Segments with RRW values between 1.001 and 1.004 are deemed to be worthy of additional consideration by the plant expert panel. This safety significance consideration is either confirmed or changed by the expert panel during the panel review process.

A summary of results of the calculations for Millstone 3 are shown in Table 3.6-3. Segments with a RRW value greater than or equal to 1.001 are shown along with the RAW values. The RRW values range from 1.001 to 1.044 while the RAW values range from 1.85E+05 to 3.67E+06.

For Surry Unit 1, a summary of the segments with RRW values greater than 1.005 is shown in Table 3.6-4. Table 3.6-5 summarizes the segments for each system that fall into the various risk categories. The segments with RRW values greater than 1.005 were deemed high safety significant while the segments with RRW values between 1.001 and 1.004 were deemed to be worthy of additional consideration by the plant expert panel.

Sensitivity Studies

In addition to quantitatively comparing the risk importance measure results to the screening criteria, the results are reviewed qualitatively as prescribed by the EPRI PSA Applications Guide (EPRI 1995). Sensitivity studies are conducted to determine if changes in key assumptions or data can impact the categorization of the piping segments. These sensitivity studies address the potential changes in component rankings by varying the estimates of the

Table 3.6-3 MILLSTONE UNIT 3 RESULTS PIPING SEGMENTS WITH RRW ≥ 1.001		
Segment	RRW	RAW
CHS-3	1.026	2.65E+06
CHS-5	1.026	2.65E+06
CHS-7	1.026	2.65E+06
CHS-23	1.021	2.08E+06
ECCS-0	1.021	2.08E+06
ECCS-5	1.001	5.22E+04
ECCS-6	1.001	5.22E+04
ECCS-8	1.001	5.22E+04
FWA-1	1.002	3.66E+06
FWA-4	1.002	3.66E+06
FWA-7	1.038	3.66E+06
FWA-12	1.038	3.66E+06
FWA-14	1.038	3.66E+06
FWA-16	1.038	3.66E+06
FWA-18	1.038	3.66E+06
HVK-1	1.002	1.85E+05
QSS-2	1.021	2.08E+06
RCS-1	1.004	4.11E+05
RCS-2	1.004	4.11E+05
RCS-3	1.001	4.11E+05
RCS-5	1.004	4.11E+05
RCS-6	1.004	4.11E+05
RCS-8	1.006	4.11E+05
RCS-9	1.005	4.11E+05
RCS-10	1.005	4.11E+05
RCS-11	1.007	4.11E+05
RCS-13	1.004	4.11E+05
RCS-14	1.005	4.11E+05
RCS-16	1.004	4.11E+05
RCS-17	1.004	4.11E+05
RCS-18	1.044	4.11E+05

Table 3.6-3 (cont.) MILLSTONE UNIT 3 RESULTS PIPING SEGMENTS WITH RRW ≥ 1.001		
Segment	RRW	RAW
RCS-20	1.044	4.11E+05
RCS-21	1.005	4.11E+05
RCS-23	1.005	4.11E+05
RCS-24	1.005	4.11E+05
RCS-25	1.007	4.11E+05
RCS-27	1.004	4.11E+05
RCS-28	1.005	4.11E+05
RCS-43	1.001	4.11E+05
RCS-56	1.001	4.11E+05
RSS-11	1.026	2.64E+06
SIH-1	1.021	2.08E+06
SIH-2	1.039	2.08E+06
SIH-3	1.039	2.08E+06
SIH-4	1.021	2.08E+06
SIL-1	1.021	2.08E+06
SIL-2	1.021	2.08E+06
SIL-3	1.021	2.08E+06
SIL-4	1.021	2.08E+06
SIL-5	1.021	2.08E+06
SWP-1	1.036	1.32E+06
SWP-2	1.036	1.32E+06
SWP-3	1.035	1.30E+06
SWP-4	1.035	1.30E+06
SWP-5	1.013	1.32E+06
SWP-6	1.013	1.32E+06
SWP-7	1.013	1.30E+06
SWP-8	1.013	1.30E+06
SWP-23	1.013	1.30E+06
SWP-25	1.013	1.32E+06
SWP-26	1.018	6.69E+05
SWP-27	1.018	6.69E+05
SWP-28	1.017	6.64E+05
SWP-29	1.017	6.55E+05

Table 3.6-4 SURRY UNIT 1 RESULTS SEGMENT SUMMARY BY SYSTEM (SEGMENTS WITH RRW > 1.005)		
Segment ID	RRW	Applicable Case (CDF/LERF, W/ or W/O Operator Action)
ACC		
None		
AFW		
AFW-4	1.02 1.008	CDF-Op act LERF- Op act
AFW-5	1.02	CDF- Op act
AFW-6	1.02	CDF- Op act
AFW-15	1.01 1.006	CDF - No Op act LERF - No Op act
AFW-16	1.01 1.006	CDF- No Op act LERF - No Op act
AFW-17	1.02 1.01	CDF- No Op act LERF - No Op act
AFW-18	1.02 1.01	CDF- No Op act LERF - No Op act
AFW-19	1.02 1.01	CDF- No Op act LERF - No Op act
AS		
AS-1	1.005	LERF - Op act
AS-2	1.01	LERF - Op act
BD		
BD-002B	1.02 1.009 1.11	CDF- Op act LERF - No Op act LERF - Op act
BD-003	1.02 1.009 1.11	CDF- Op act LERF - No Op act LERF - Op act
BD-005B	1.02 1.009 1.11	CDF- Op act LERF - No Op act LERF - Op act
BD-006	1.02 1.009 1.11	CDF- Op act LERF - No Op act LERF - Op act

Table 3.6-4 (cont.) SURRY UNIT 1 RESULTS SEGMENT SUMMARY BY SYSTEM (SEGMENTS WITH RRW > 1.005)		
Segment ID	RRW	Applicable Case (CDF/LERF, W/ or W/O Operator Action)
BD-008B	1.02 1.009 1.11	CDF- Op act LERF - No Op act LERF - Op act
BD-009	1.02 1.009 1.11	CDF- Op act LERF - No Op act LERF - Op act
CC		
CC-25	1.008	LERF - Op act
CC-30	1.008	LERF - Op act
CC-33	1.008	LERF - Op act
CH		
CH-008	1.02	CDF - Op act
CH-009	1.02	CDF - Op act
CH-010	1.02	CDF - Op act
CN		
CN-008	1.02 1.007 1.013	CDF - No Op act CDF - Op act LERF - No Op act
CS		
None		
CW		
CW-5	1.006	CDF-Op act
CW-6	1.006	CDF-Op act
CW-7	1.006	CDF-Op act
CW-8	1.006	CDF-Op act
ECC		
None		
EE		
None		
FC		
N/a		
FW		
FW-1	1.007	LERF - Op act

Table 3.6-4 (cont.) SURRY UNIT 1 RESULTS SEGMENT SUMMARY BY SYSTEM (SEGMENTS WITH RRW > 1.005)		
Segment ID	RRW	Applicable Case (CDF/LERF, W/ or W/O Operator Action)
FW-2	1.007	LERF - Op act
FW-5	1.008	LERF - Op act
FW-12	1.008 1.04	LERF - Op act CDF - Op act
FW-13	1.008 1.04	LERF - Op act CDF - Op act
FW-14	1.008 1.04	LERF - Op act CDF - Op act
HHI		
HHI-10	1.008 1.008	LERF - Op act CDF - Op act
HHI-12A	1.005 1.009	LERF - Op act CDF - Op act
HHI-13	1.009 1.008	LERF - Op act CDF - Op act
HHI-15	1.009 1.008	LERF - Op act CDF - Op act
HHI-17	1.009 1.008	LERF - Op act CDF - Op act
LHI		
None		
MS		
MS-33	1.009 1.041	LERF - Op act CDF - Op act
MS-34	1.009 1.041	LERF - Op act CDF - Op act
RC		
RC-16	1.03	CDF- Op act
RC-17	1.03	CDF- Op act
RC-18	1.05	CDF- Op act
RC-19	1.009	CDF- Op act
RC-37	1.01	CDF- Op act
RC-38	1.01	CDF- Op act
RC-39	1.01	CDF- Op act

Table 3.6-4 (cont.) SURRY UNIT 1 RESULTS SEGMENT SUMMARY BY SYSTEM (SEGMENTS WITH RRW > 1.005)		
Segment ID	RRW	Applicable Case (CDF/LERF, W/ or W/O Operator Action)
RC-41	1.07	CDF- Op act
RC-42	1.06	CDF- Op act
RC-43	1.06	CDF- Op act
RH		
RH-003	1.025	LERF - Op act
RH-003B	1.01 1.01 1.13	CDF- Op act LERF - No Op act LERF - Op act
RS		
None		
SW		
SW-04	1.006	CDF- Op act
SW-05	1.006	CDF- Op act
SW-06	1.006	CDF- Op act
SW-18	1.09 1.11	CDF - No Op act LERF - No Op act
SW-19	1.09 1.11	CDF - No Op act LERF - No Op act
SW-20	1.09 1.11	CDF - No Op act LERF - No Op act
SW-21	1.09 1.11	CDF - No Op act LERF - No Op act
SW-22	1.09 1.11	CDF - No Op act LERF - No Op act
SW-23	1.09 1.11	CDF - No Op act LERF - No Op act
SW-24	1.09 1.11	CDF - No Op act LERF - No Op act
SW-25	1.09 1.11	CDF - No Op act LERF - No Op act
VS		
VS-2	1.12 1.044	CDF - No Op act LERF - No Op act

Table 3.6-5 SURRY UNIT 1 RESULTS SUMMARY OF SAFETY SIGNIFICANT SEGMENTS				
System	# of Segments	# of Segments with RRW > 1.005	# of Segments with RRW between 1.001 and 1.004	# of Segments with RRW < 1.001
ACC	15	0	0	15
AFW	32	8	10	14
AS	2	2	0	0
BD	12	6	0	6
CC	66	3	10	53
CH	44	3	0	41
CN	9	1	0	8
CS	16	0	6	10
CW	16	4	0	12
ECC	8	0	0	8
EE	7	0	0	7
FC	9	N/A	N/A	N/A
FW	20	6	7	7
HHI	27	5	3	19
LHI	18	0	0	18
MS	38	2	8	28
RC	96	10	21	65
RH	11	2	1	8
RS	13	0	0	13
SW	54	11	18	25
VS	2	1	1	0
TOTAL	515	64	85	357

piping pressure boundary failure probabilities/rates and estimates of the conditional core damage frequency/probability.

Several sensitivity studies were conducted during the Millstone 3 program on the total piping pressure boundary CDF results. The base model for Millstone 3 piping generally assumes no operator recovery actions in the conditional CDF calculations and uses the break probabilities from the SRRA calculation, but with a 1E-08 truncation for piping segments with no active failure mechanisms. This base case is shown as "BASE PIPING CDF" in Figure 3.6-5, with a value of 2.28E-08/year, along with the results of the sensitivity studies that are discussed below in detail. Figure 3.6-6 shows a breakdown by system of the CDF changes for the sensitivities.

The risk importance measures were calculated for each sensitivity study and a comparison of these results with the piping segments chosen by the expert panel is discussed in Section 3.6.4.

- Credit for Operator Recovery Action - A sensitivity was performed in which postulated operator recovery actions (to isolate the piping failure) that would change the consequences in each piping segment were considered. The operator recovery action was credited with a success probability of 1.0 (failure probability of 0). For a majority of piping segments, an operator recovery action could not be postulated.

  For Millstone 3, the only operator action credited in the base calculations was for auxiliary feedwater piping segments FWA-1 and FWA-4 where the operator would align the condensate storage tank (CST) to the intact auxiliary feedwater trains to reduce the consequences from a loss of the demineralized water storage tank (DWST) to all trains to the loss of one auxiliary feedwater motor-driven pump train. Credit for this operator action was taken based on the advice of the expert panel (which included a plant operator familiar with the emergency operator procedures) and time availability based on safety analysis calculations.

  For Millstone 3, the total piping pressure boundary core damage frequency was calculated to be 1.14E-08/year (CDF W/OP ACTION), which is only a factor of 2 lower than the base piping CDF of 2.28E-08/year.

  For Surry Unit 1, this sensitivity is reported with the base results.

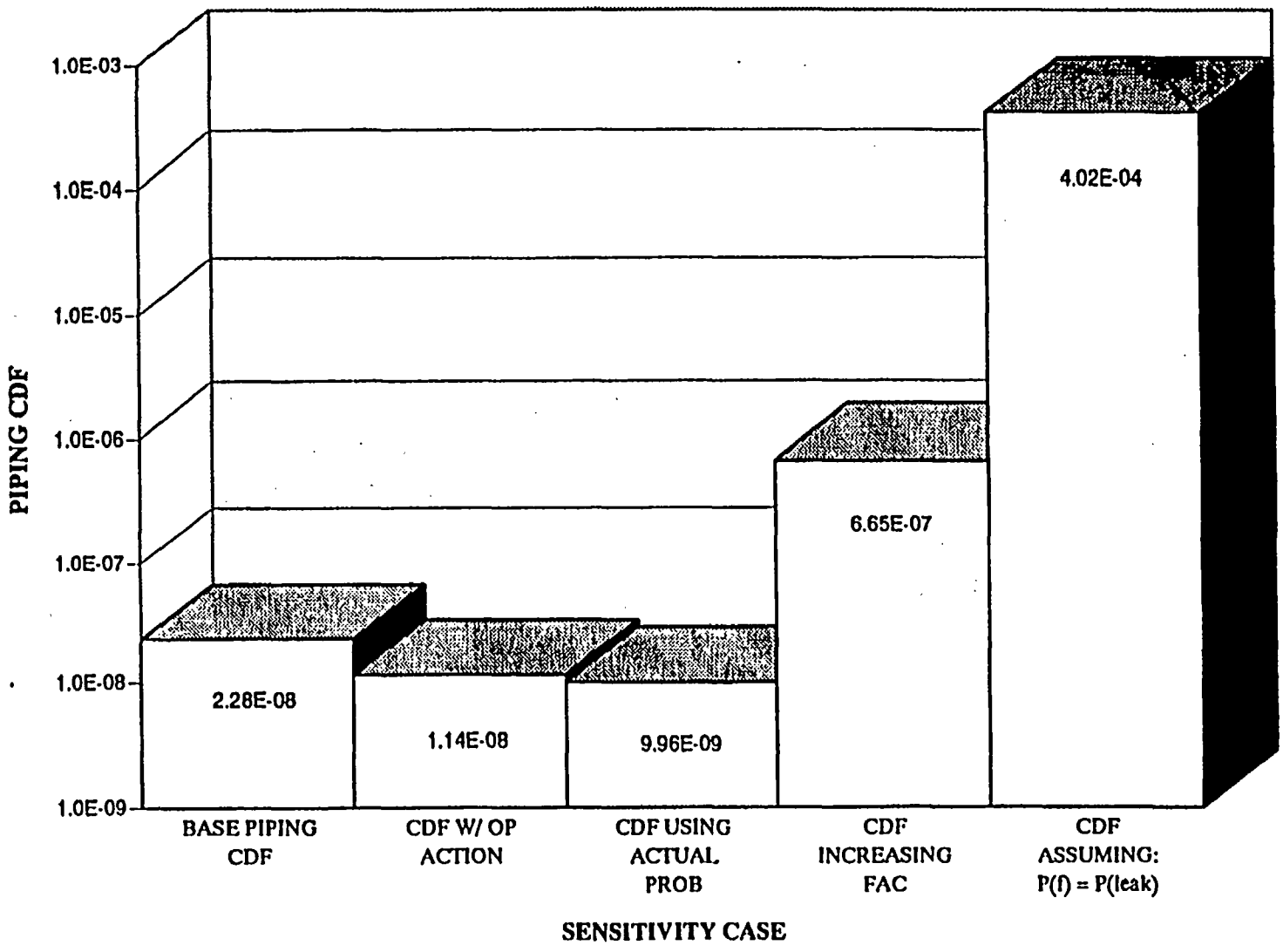

Figure 3.6-5 Comparison of Millstone Unit 3 Piping CDF for Various Sensitivity Studies

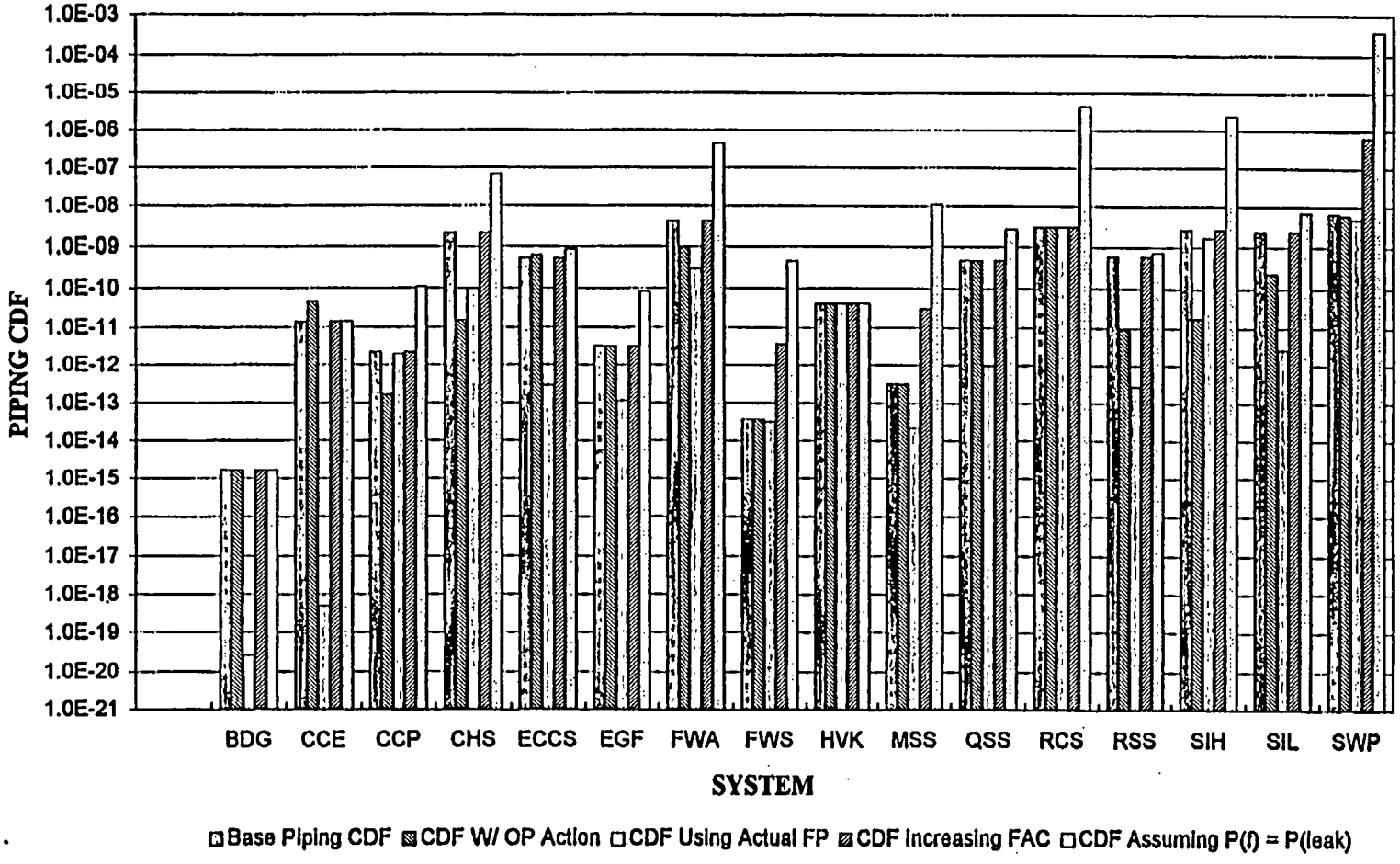

Figure 3.6-6 Comparison by System of Millstone Unit 3 Piping CDF for Various Sensitivity Studies

- Use of Actual SRRA failure probabilities - The use of a threshold value of 1E-08 for piping failure probabilities was examined by using the actual SRRA code failure probabilities as part of the Millstone 3 study. An example of the actual SRRA code failure probabilities was shown in Table 3.5-2. The use of these failure probabilities would be expected to give a lower bound of the piping failure probabilities. The CDF was recalculated to be 9.96E-09/year (CDF USING ACTUAL PROB), which is more than a factor of 2 reduction in the base piping CDF. For Surry Unit 1, no threshold value was used; the actual probabilities were used in the base results.

- Credit for Plant FAC Program - The Millstone 3 application assumed that the plant's FAC program was adequate in finding piping degradation with respect to this failure mode. This was considered in the development of the piping failure probabilities for several systems affected by FAC. A sensitivity study was conducted that increased the failure probabilities for those piping segments (in the main feedwater, main steam, and service water systems) by a factor of 100 and the resultant core damage frequency and risk importance measures were recalculated. The CDF from this sensitivity study (CDF Increasing FAC) was determined to be 6.65E-07/year, which is a factor of 30 increase in the base piping CDF. This assumption results in the affected systems dominating the CDF, and inspection resources, which should be used for other plant piping systems, would be misallocated.

  The Millstone Unit 3 secondary side FAC program had been extensively reviewed by outside organizations and found to be on par or better than programs at other sites. However, no program is 100% reliable in identifying every susceptible location. For example, there is some uncertainty in the pipe wear rate program input, so the wear rate prediction necessarily includes that uncertainty. Such uncertainties are modeled in the SRRA code by using a distribution instead of a fixed value for the pipe wall wear rate. The situation is similar for the service water system erosion mechanism.

  The essential point is that these established programs represent the best available technology for preventing significant piping failures due to these mechanisms, and are updated by the industry on a continuing basis. Thus effective monitoring and controlling the active mechanism (and in preventing leaks) should be credited. In developing a risk-informed program for these systems, the main point is to consider other mechanisms that might not be detected by the established mechanism-specific

monitoring program and thus a factor of 100 on failure probability in the FAC sensitivity was used to represent the success of the program to date.

- Use of Leak Probabilities - The SRRA code (described in Section 3.5 and Supplement 1) generates small leak probabilities in addition to full break probabilities. The use of the these leak probabilities provides an upper bound estimate of the piping pressure boundary failure probabilities. The use of the leak probabilities in lieu of the break probabilities in the core damage frequency and risk importance measure calculations may provide an additional differentiation between the piping segments even though the small leak does not disable the safety function of the piping segment and thus would actually result in significantly reduced consequences. The core damage frequency calculated for this case was 4.02E-04/year (CDF Assuming P(f) = P(leak)). This result provides an extremely conservative upper bound of the expected CDF contribution due to piping failures. The risk importance measures were also recalculated as discussed in Section 3.6.4.

These sensitivity studies showed that although variation exists in the numerical results, most piping segments have the same relative ranking (as discussed in section 3.6.4). This result is similar to that obtained from the uncertainty/sensitivity analyses performed by ASME Research and Pacific Northwest Laboratories, as documented in NUREG/CR-6181 (NRC 1994) and NUREG/GR-005 (ASME 1993), in earlier work performed at the Surry nuclear plant.

For Surry Unit 1, the sensitivity study for credit for operator recovery action was performed as part of the base results as shown in Table 3.6-2. The use of actual SRRA failure probabilities and the use of leak probabilities sensitivity studies were not deemed to be necessary based on the changes made to the overall process. The actual SRRA failure probabilities were used for Surry and no threshold value (1E-08) was used in the calculations. Because the leak probabilities and disabling leak probabilities were used in the base calculations (these probabilities are higher than the rupture probabilities), there was no need to perform a sensitivity study using the leak probabilities.

A sensitivity study was conducted for Surry which examined the credit for the plant's augmented program. In the base results, the plant's augmented program was assumed to be

adequate in finding piping degradation with respect to the failure mechanism addressed by the augmented program. This was considered in the piping failure probabilities for several systems used in the base risk calculations (i.e., the with ISI values from the SRRA calculations were used for segments). A sensitivity study was conducted which did not credit these augmented programs and replaced the failure probabilities with the without ISI values. The results of this study for Surry are shown in Table 3.6-6 and shown graphically in Figures 3.6-7 and 3.6-8.

Uncertainty Analysis

In addition to the sensitivity studies described above, a simplified uncertainty analysis is performed to ensure that no low safety significant segments could move into the high safety significance when reasonable variations in the pipe failure and conditional CDF/LERF probabilities are considered. The results of this evaluation along with other insights are provided to the plant expert panel.

In order to address this uncertainty, a distribution was developed around each of these "point estimates" such that the median of the log-normal distribution is equal to the point estimate. The "spread" of the distribution about the median is determined by the standard deviation.

The standard deviation of the related normal distribution is calculated as follows:

$$\sigma = \frac{\ln(\chi_{.95}) - \ln(\chi_{.50})}{\text{NORMSINV}(.95)}$$

where:

$\chi_{.95}$ = factor above the mean which represents the 95%-tile of the log-normal distribution. Factors of 5, 10 and 20 were used for this analysis. The factor used was determined by the value of the point estimate. If the point estimate was less than 1E-04, a factor of 20 was used. If the point estimate was greater than or equal to 1E-02, a factor of 5 was used. Otherwise, a factor of 10 was used.

Table 3.6-6 SURRY UNIT 1 AUGMENTED PROGRAM SENSITIVITY PIPING RISK CONTRIBUTION BY SYSTEM					
System	Number of Segments	CDF No OP Action	CDF with OP Action	LERF No OP Action	LERF with OP Action
ACC	15	4.68E-11	3.06E-11	2.76E-11	3.81E-11
AFW	32	6.35E-5	7.92E-7	2.56E-6	7.30E-8
AS	2	7.84E-9	7.84E-9	7.85E-9	7.85E-9
BD	12	4.60E-6	4.60E-6	2.68E-6	2.68E-6
CC	66	2.34E-8	1.90E-8	1.97E-8	1.60E-8
CH	44	2.73E-7	2.73E-7	1.54E-9	1.54E-9
CN	9	1.32E-6	1.63E-7	6.96E-8	3.33E-9
CS	16	1.48E-7	9.74E-9	1.26E-8	2.17E-9
CW	16	1.00E-7	1.00E-7	2.79E-9	2.79E-9
ECC	8	2.41E-10	2.41E-10	8.14E-12	8.14E-12
EE	7	5.56E-10	5.56E-10	7.82E-12	7.82E-12
FC	9	N/A	N/A	N/A	N/A
FW	20	4.76E-6	4.75E-6	2.51E-7	2.51E-7
HHI	27	3.43E-6	1.60E-6	2.60E-7	1.07E-7
LHI	18	9.97E-8	2.25E-9	8.53E-9	2.32E-10
MS	38	4.02E-6	4.02E-6	9.73E-8	9.73E-8
RC	96	1.83E-6	1.82E-6	4.82E-9	4.80E-9
RH	11	6.54E-8	6.54E-8	6.55E-8	6.55E-8
RS	13	3.81E-9	1.58E-9	5.85E-12	0
SW	54	4.37E-5	1.43E-7	4.13E-6	1.02E-8
VS	2	6.84E-6	0	2.24E-7	0
TOTAL	515	1.35E-4	1.84E-5	1.04E-5	3.32E-6

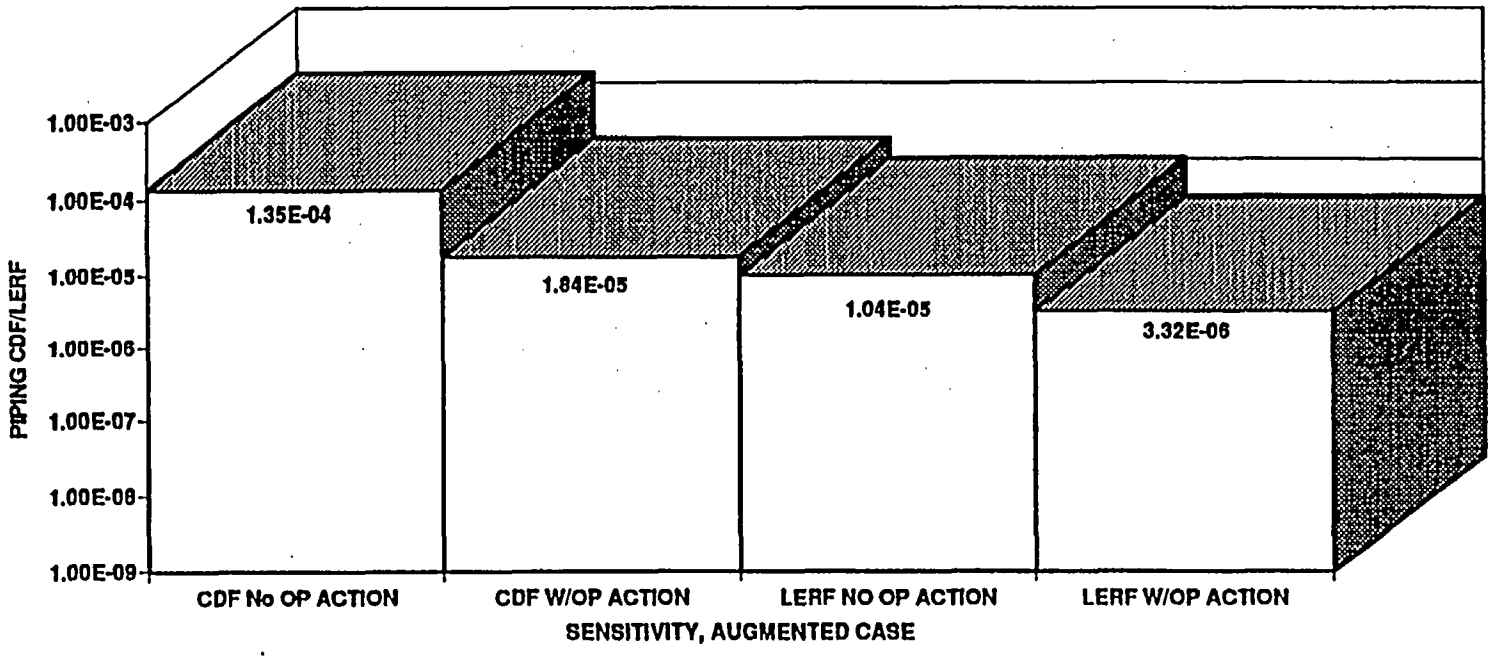

Figure 3.6-7 Surry Unit 1 No Credit for Augmented Programs Sensitivity Study

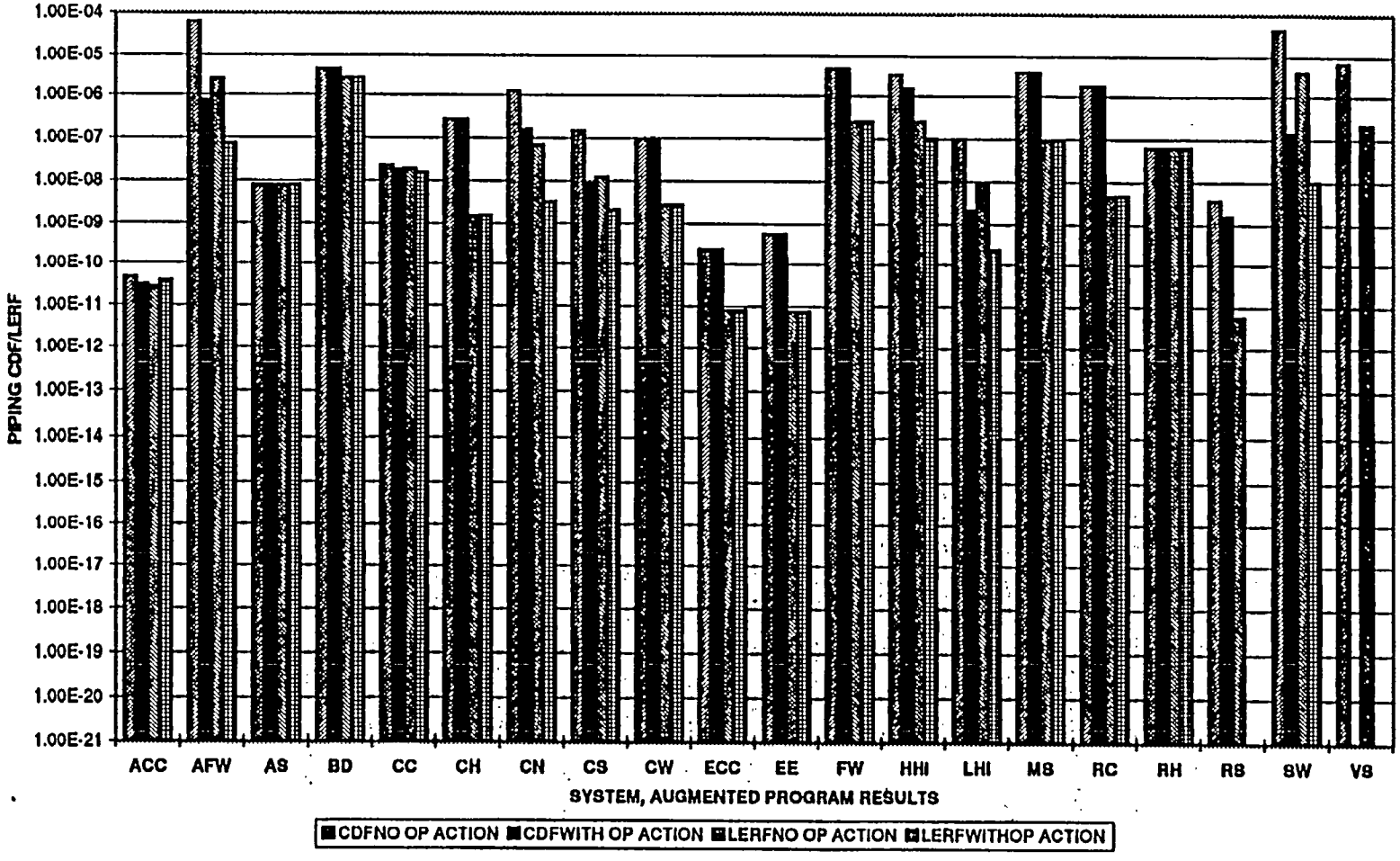

Figure 3.6-8 Surry Unit 1 No Credit for Augmented Programs Results by System

χ_{50} = median of the log-normal distribution. A median value of 1 was used.

NORMSINV = the inverse of the standard normal cumulative distribution (mean 0.0, standard deviation 1.0) given a probability.

The @RISK software (Palisade 1996), an "add-in" to Microsoft Excel, was used to analyze the uncertainty and generate the range of outcomes for each piping segment. A simulation of 5000 iterations was performed and simulation statistics collected for total segment piping CDF/LERF, RAW, RRW and the Total plant piping CDF/LERF. The mean CDF/LERF value was then used for each piping segment. The results of this uncertainty analysis showed that there was no significant change in the RRW ranking. The uncertainty analysis results are summarized in Tables 3.6-7 and 3.6-8.

The uncertainty analysis identified a total of 86 segments whose RRW was greater than 1.005 (see Table 3.6-8). Approximately 75% of the piping segments identified using point estimates were also identified through the uncertainty analysis. The remaining 25% were in previous RRW range of 1.001 to 1.004 which were targeted for expert panel special consideration.

3.6.2 Deterministic Considerations

The risk importance measures provide a sound basis for determining the plant risk for normal power operation and the required response to internal initiating events; however, there are other considerations which also should be incorporated into the piping segment safety significance assessment. These considerations are not directly related to the probabilistic assessments and include the segment importance for external events (seismic, fire and external flood), safety function performance during shutdown modes, the importance to design basis analysis and other accident scenarios, and operation and maintenance insights which should be taken into account. These considerations are described below.

<u>External Events Evaluation</u>

The importance measures calculated using the plant PSA identify the safety significance for internal events. Similar calculations for external events such as seismic, fire, and flood can not

Table 3.6-7 SURRY UNIT 1 UNCERTAINTY ANALYSIS MEAN PIPING RISK CONTRIBUTION BY SYSTEM					
System	Number of Segments	CDF No Operator Action	CDF With Operator Action	LERF No Operator Action	LERF With Operator Action
ACC	15	3.07E-9	3.10E-9	7.40E-10	8.74E-10
AFW	32	2.82E-5	1.41E-6	1.87E-6	1.74E-7
AS	2	3.24E-8	3.29E-8	3.31E-8	3.41E-8
BD	12	1.20E-6	1.18E-6	6.98E-7	6.95E-7
CC	66	1.38E-7	1.16E-7	1.03E-7	8.70E-8
CH	44	1.94E-6	1.97E-6	1.51E-8	1.32E-8
CN	9	8.39E-6	5.23E-7	4.61E-7	1.07E-7
CS	16	2.54E-6	4.98E-7	3.45E-7	4.61E-7
CW	16	5.20E-7	5.23E-7	2.30E-8	2.41E-8
ECC	8	7.50E-10	8.28E-10	1.09E-10	9.83E-11
EE	7	4.56E-9	3.80E-9	3.26E-10	2.79E-10
FC	9	N/A	N/A	N/A	N/A
FW	20	2.27E-6	2.22E-6	1.56E-7	1.56E-7
HHI	27	4.01E-6	1.27E-6	6.05E-7	2.45E-7
LHI	18	4.49E-7	2.00E-8	6.04E-8	2.58E-9
MS	38	2.13E-6	2.09E-6	8.94E-8	8.65E-8
RC	96	1.26E-5	1.29E-5	7.00E-8	7.26E-8
RH	11	4.60E-7	4.70E-7	5.42E-7	5.08E-7
RS	13	1.16E-6	1.25E-6	2.75E-10	0
SW	54	1.17E-4	6.98E-7	1.76E-5	7.03E-8
VS	2	2.80E-5	0	1.43E-6	0
TOTAL	515	2.11E-4	2.71E-5	2.41E-5	2.74E-6

Table 3.6-8 SURRY UNIT 1 (NOTE 1) UNCERTAINTY ANALYSIS RESULTS HIGH SAFETY SIGNIFICANT PIPING SEGMENTS				
System	CDF Without Operator Action - Uncertainty Analysis	CDF With Operator Action - Uncertainty Analysis	LERF Without Operator Action - Uncertainty Analysis	LERF With Operator Action - Uncertainty Analysis
ACC	None	None	None	None
AFW	AFW-15, 16, 17, 18, 19	AFW-4, 5, 6, 28	AFW-15, 16, 17, 18, 19	AFW-4, 5, 6, 13, 14, 28
AS	None	None	None	AS-1, 2
BD	None	BD-2B, 3, 5B, 6, 8B, 9	BD-2B, 3, 5B, 6, 8B, 9	BD-2B, 3, 5B, 6, 8B, 9
CC	None	None	None	CC-25, 30, 33
CH	None	CH-8, 9, 10	None	None
CN	CN-8	CN-8	CN-8	CN-8
CS	None	CS-9	CS-5, 6	CS-7, 8, 9
CW	None	CW-5, 6, 7, 8	None	None
ECC	None	None	None	None
EE	None	None	None	None
FC	N/A	N/A	N/A	N/A
FW	None	FW-12, 13, 14	None	FW-1, 2, 5, 12, 13, 14
HHI	HHI-5A, 6A	HHI-10, 12A, 13, 15, 17	HHI-4A, 5A, 6A	HHI-10, 12A, 13, 15, 17
LHI	None	None	None	None

Table 3.6-8 (cont.) SURRY UNIT 1 UNCERTAINTY ANALYSIS RESULTS HIGH SAFETY SIGNIFICANT PIPING SEGMENTS				
System	CDF Without Operator Action - Uncertainty Analysis	CDF With Operator Action - Uncertainty Analysis	LERF Without Operator Action - Uncertainty Analysis	LERF With Operator Action - Uncertainty Analysis
MS	None	MS-33, 34	None	MS-33, 34
RC	RC-18, 41, 42, 43	RC-10, 11, 12, 13, 14, 15, 16, 17, 18, 19, 37, 38, 39, 41, 42, 43	None	RC-41, 42, 43
RH	None	RH-3B	RH-3, 3B	RH-2, 3, 3B
RS	RS-10	RS-9, 10	None	None
SW	SW-18, 19, 20, 21, 22, 23, 24, 25	SW-4, 5, 6, 9, 10	SW-18, 19, 20, 21, 22, 23, 24, 25	SW-4, 6
VS	VS-2	None	VS-2	None

Notes for Table 3.6-8:

1. For risk calculations, the segments identified as high safety significant had calculated values for RRW of greater than 1.005.

be performed unless a PSA model exists for these types of events. If a PSA model does not exist, to determine whether a segment is high or low safety-significant for an external event, the expert panel considers the segment function in mitigating the consequences of the external event, as well as the likelihood of the event.

Shutdown Risk Evaluation

A process to evaluate component importance to safe plant shutdown is used. The shutdown risk process is based upon three objectives: shutting down the reactor to the cold shutdown condition, maintaining the cold shutdown condition, and mitigating the consequences of an accident. There are five safety functions associated with the shutdown objectives: reactivity control, decay heat removal, pressure control, inventory control, and containment integrity. (Power availability should also be considered.) Each piping segment is evaluated to determine its possible importance in performing any of the safety functions. The process considers flow paths used or isolated during shutdown; when flow paths are used or isolated; the importance of component operation in performing a safety function; the length of time the plant is in a configuration that requires component operation; and the availability of other systems to provide functional redundancy. These factors should be considered when determining component safety significance to shutdown operations. In addition, the impact of this mode of plant operation on the failure modes and causes and failure probability (lower temperatures, etc.) should be considered.

Importance to Other Accident Scenarios

Piping failures which could lead to other accident scenarios, such as radioactive releases, are considered to identify any accident scenarios not previously accounted for in the safety significance assessment.

Component Maintenance and Operations Insights

Plant operation and maintenance experience may show that some piping segments have a history of design or operating issues. Information provided by the maintenance staff is used to identify any piping segments that would cause safety concerns.

Importance to Design Basis Analysis

Segment importance in the plant design basis analysis performed for the Final Safety Analysis Report, used to license the plant, is considered to identify any design basis concerns.

Other Deterministic Insights

This category is used to document important information regarding other deterministic aspects of the piping segment failure which does not readily fit into any of the above categories.

Piping Segment Worksheets

To aid the expert panel, segment information worksheets are prepared for the expert panel. Table 3.6-9 shows the format for the worksheet while Table 3.6-10 provides a description of each section of the worksheet. The worksheets are used as a mechanism for documenting and reviewing the comments and exchanges of information that are part of an expert panel process. The structure of the worksheet is based largely upon the three phases of the risk categorization process. Therefore, a completed worksheet contains all the information, calculation results, evaluations, and the risk categorization for a segment. Supplemental information is attached to each worksheet to provide a complete package for each piping segment.

3.6.3 Expert Panel

The primary focus of the expert panel sessions is to review all pertinent information and determine the final safety-significant category for each of the piping segments. The expert panel is responsible for the review and approval of all risk-informed selection results by utilizing their expertise (including knowledge of prior inspection results, industry data, and any available stress and fracture mechanics results) and probabilistic safety assessment insights to develop the final categories of high safety-significant and low safety-significant items to be included for inservice inspection. The process is shown in Figure 3.6-9. In order to provide a comprehensive review, many of the panel members are also members of the expert panel that was established to implement the Maintenance Rule. The risk-informed ISI expert panel includes expertise in the following fields:

Table 3.6-9 EXPERT PANEL EVALUATION SEGMENT RANKING WORKSHEET		
Section 1 System & Pipe Segment Identification		
System & Segment Description:		
Location/P&ID Drawing:		
System Function(s):		

Section 2 Risk Ranking Information		
Failure Effect on System Without Operator Action:		
Failure Effect on System With Operator Action:		
Initiating Events Impact:		
Containment Performance Impact:		
Conditional Core Damage Frequency due to Pressure Boundary Failure:	Without OA	With OA
Total Segment Pressure Boundary Failure Core Damage Frequency (FP * CDF_{cond})		
CDF_{pb} Importance Measure Values	RAW RRW	
Conditional LERF due to Pressure Boundary Failure:	Without OA	With OA
Total Segment Pressure Boundary Failure Large Early Release Frequency		
$LERF_{pb}$ Importance Measure Values	RAW RRW	
Comments		

Section 3 Pressure Boundary Failure Probability	
Segment Elements (welds, tees, elbows, etc.):	
Pressure Boundary Failure Mechanism(s):	
Pressure Boundary Failure Probability	Small Leak: Large Leak:
Basis for Pressure Boundary Failure Probability	
Comments	

Table 3.6-9 (cont.) EXPERT PANEL EVALUATION SEGMENT RANKING WORKSHEET
Section 4 Indirect Effects Evaluation
Indirect Effects

Section 5 Other Considerations
External Events Evaluation Seismic: Fire: External Flood:
Shutdown Risk Evaluation:
Importance to Other Accident Scenarios:
Component Maintenance and Operation Insights:
Importance to Design Basis Analysis:
Other Deterministic Insights:

Section 6 Final Risk Category	
Category: High Safety Significant	Low Safety Significant
Basis	

Table 3.6-10 EXPERT PANEL EVALUATION SEGMENT RANKING WORKSHEET SECTION DEFINITIONS	
Section	**Definition**
SECTION 1. SYSTEM & SEGMENT IDENTIFICATION	This section contains information describing the system, the segment, plant drawing references, and the system and piping segment safety function(s).
SECTION 2. RISK RANKING INFORMATION	This section contains the risk categorization results developed using the plant PSA model and core damage frequency (CDF) and large early release frequency (LERF) as the consequence measure. This categorization is based upon the calculation of risk importance measures. This section also contains the results of the at-power importance measure calculations.
A. Failure Effect on System Without Operator Action	This subsection identifies the failure effect from a piping failure in the defined segment without consideration of operator action to recover from the piping failure. Failure effects are effects such as loss of train A pump, loss of entire system, etc.
B. Failure Effect on System With Operator Action	This subsection identifies the failure effect from a piping failure in the defined segment with operator action to recover from the piping failure by isolating the failure. Failure effects are effects such as loss of train A pump, loss of entire system, etc.
C. Initiating Events Impact	A review of each initiating event (LOCAs, steam line/feed line breaks, etc.) is conducted to see if the pipe segment failure results in an initiating event.
D. Containment Performance Impact	This subsection identifies pipe segments that are important to containment performance (PSA level 2 analysis), such as segments that penetrate containment or whose failure would cause a release path outside containment.
E. Conditional Core Damage Frequency due to Pressure Boundary Failure	This section contains the plant's conditional core damage frequency or probability from the PSA.
F. Total Segment Pressure Boundary Failure Core Damage Frequency	This section contains the total segment core damage frequency due to just pressure boundary failures calculated by using the plant PSA to obtain the conditional core damage frequency and the failure probabilities (from section 3) determined for each segment.
G. CDF_{pb} Importance Measure Values	This subsection contains the at-power risk categorization based upon the computed importance measures (Risk Achievement Worth and Risk Reduction Worth) when compared to guidelines for identifying high safety-significant piping segments.

Table 3.6-10 (cont.) EXPERT PANEL EVALUATION SEGMENT RANKING WORKSHEET SECTION DEFINITIONS	
Section	**Definition**
H. Conditional Large Early Release Frequency due to Pressure Boundary Failure	This section contains the plant's conditional large early release frequency or probability from the PSA.
I. Total Segment Pressure Boundary Failure Large Early Release Frequency	This section contains the total segment large early release frequency due to just pressure boundary failures calculated by using the plant PSA to obtain the conditional large early release frequency and the failure probabilities (from section 3) determined for each segment.
J. $LERF_{pb}$ Importance Measure Values	This subsection contains the at-power risk categorization based upon the computed importance measures (Risk Achievement Worth and Risk Reduction Worth) when compared to guidelines for identifying high safety-significant piping segments.
K. Expert Panel Discussion/Comments	This subsection lists any comments that are important in describing information contained in this section. This information may identify where the pipe segment is modeled in the PSA, assumptions made to quantify the conditional effect and an explanation of the importance measure results. Plant expert panel comments may also be incorporated into this section for section 2.
SECTION 3. PRESSURE BOUNDARY FAILURE PROBABILITY	This section describes the postulated pressure boundary failure, the postulated failure mechanism and the basis for the failure probability obtained for the pressure boundary failure.
A. Segment Elements	This subsection describes the segment element(s) for which the failure probability is calculated.
B. Pressure Boundary Failure Mechanism(s)	This subsection identifies the failure mechanisms postulated for the failure of the pressure boundary, such as fatigue.
C. Pressure Boundary Failure Probability	This subsection identifies the pressure boundary failure probability calculated. This includes the small leak probability and large leak probability.
D. Basis for Pressure Boundary Failure Probability	This subsection provides a summary of the basis for the pressure boundary failure probability.
E. Comments	This subsection provides any comments association with the pressure boundary failure probability calculation.

Table 3.6-10 (cont.) EXPERT PANEL EVALUATION SEGMENT RANKING WORKSHEET SECTION DEFINITIONS	
Section	**Definition**
SECTION 4. INDIRECT EFFECTS EVALUATION	This section describes any indirect effects resulting from the pressure boundary failures (such as loss of adjacent equipment).
A. Indirect Effects	This section describes the postulated mechanism for the indirect effect including spray, flood, pipe whip, jet impingement, etc. This section defines the impact on other systems of the pressure boundary failure, such as loss of a motor control center, loss of one train of solid state protection, etc.
SECTION 5. OTHER CONSIDERATIONS	There are other considerations, such as operational issues and external events, that could affect risk categorization. Risk importance, beyond quantifiable measures, is determined by expert engineering judgment. This section documents the information provided and considered by experts from a variety of disciplines to completely evaluate component performance for other plant events and operating conditions.
A. External Events Evaluation	This section identifies any specific concerns with regard to mitigation of external events such as seismic, fire and flood. The expert panel considers the piping segment's function in mitigating the consequences of events, as well as the likelihood of events. This section identifies any unique situations for these events not covered in Section 2 in which the piping segment performs a specific function to respond to the external event.
B. Shutdown Risk Evaluation	Shutdown risk is based upon shutting down the reactor to the cold shutdown condition, maintaining the cold shutdown condition, and mitigating the consequences of an accident. Reactivity control, decay heat removal, pressure control, inventory control, and containment integrity are the safety functions required to meet the shutdown objectives. This section documents the evaluation performed for each pipe segment to determine its importance in performing any safety functions during shutdown modes.
C. Importance to Other Accident Scenarios	This subsection identifies failures that could lead to other accident scenarios, such as radioactive releases.
D. Component Maintenance and Operational Insights	This subsection provides plant operation and inspection insights for segments that would cause safety or operational concerns.
E. Importance to Design Basis Analysis	This subsection identifies, if any, the segment importance to the plant design bases analysis or licensing impact (from the Final Safety Analysis Report).
F. Other Deterministic Insights	This subsection documents important information that does not fit into any of the other deterministic sections. This section also captures specific expert panel comments with regard to other considerations.

Table 3.6-10 (cont.) EXPERT PANEL EVALUATION SEGMENT RANKING WORKSHEET SECTION DEFINITIONS	
Section	**Definition**
SECTION 6. FINAL RISK CATEGORY	This section contains the final risk category for a pipe segment and the worksheet section(s) that, primarily, justify the categorization. The information in this section is the culmination of the analysis, information, and results presented in the entire worksheet and the expert panel process. The categorization of the piping segment and the basis for that conclusion are documented in this section.

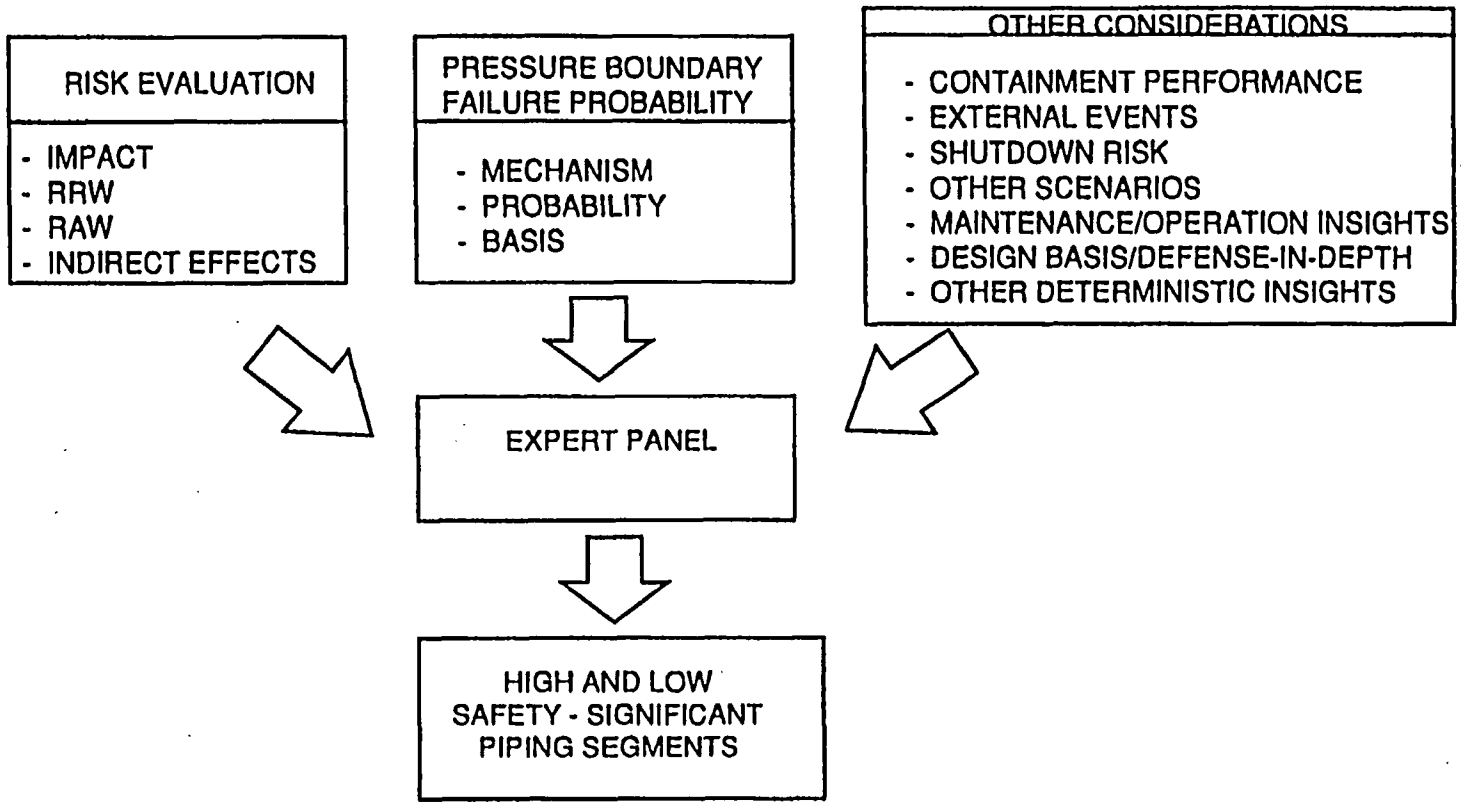

Figure 3.6-9 Plant Expert Panel Process

- Probabilistic Safety Assessment
- Plant Operations
- Plant Maintenance
- Plant Engineering
- Safety Analysis

In addition, panel members with expertise in the following areas should be included:

- Inservice Inspection
- Nondestructive Examination
- Stress and Materials Considerations

At the initial expert panel session, information on each of following topics should be presented:

- Overview of risk-informed inservice inspection methodology
- Goals of the study
- PSA Model: Information on the plant PSA model (scope, events analyzed, total core damage frequency, dominant contributors to core damage frequency, and Level 2 results). Information on the method(s) for modeling the segment piping failures in the PSA.
- Scope of Program: The systems included in the scope of the program should be presented and concurrence obtained.
- Importance Measures: Importance measure calculations, specifically the RAW and RRW, what each measure indicates, and how the measures will be used in the risk categorization process.
- Information Gathering and At-Power Results: Results of the information gathering and at-power importance measure calculations should be presented. This information is provided to the expert panel with an initial indication of possible safety-significant piping segments.

- Deterministic Consideration: Other considerations such as external events, shutdown risk, other accident scenarios, design basis, and component maintenance and operation insights should be discussed.

- Expert Panel Process: The performance of the expert panel in determining high safety-significant piping segments, including the panel composition, participation, and expectations should be discussed. A facilitator can be used to open expert panel discussions and to aid the panel in proceeding through the information and to reach a consensus on safety-significance categorization of each piping segment.

The expert panel (such as the expert panel used for the Maintenance Rule) evaluates the risk-informed results and makes a final decision by identifying the high safety-significant pipe segments for ISI. The piping segments that have been determined by quantitative methods to be high safety significant should not be classified lower by the expert panel without sufficient justification that is documented as part of the program. The expert panel should be focused primarily on adding piping segments to the higher classification. The expert panel may feedback comments to the appropriate engineering personnel which may cause an adjustment of the numerical results. Adjusted numerical results should be reviewed by the expert panel. The expert panel should:

- Consider the PSA and failure probability information, which initially classifies segments as high safety-significant if the RRW is greater than 1.005 for the CDF or LERF calculations with or without operator action. Consider the RAW values for additional insights. Segments with RRW values between 1.001 and 1.004 are deemed to be worthy of additional consideration.

- Consider other deterministic factors to assess the segment safety significance (refer to Section 3.6.2)

- Evaluate segments with similar consequences and/or failure probabilities in a similar manner to ensure classification consistency among segments within a system and between systems.

- Obtain a consensus decision for the safety significance of each segment. If a consensus cannot be reached, determine what additional information is needed to reach a consensus and evaluate the segment(s) again.

- Plant-specific expert panel guidance should be developed for this process or guidance from other risk-informed applications (e.g., Maintenance Rule) may be used as part of this process to ensure consistency across the risk-informed applications.

To aid the expert panel, piping segment information worksheets and simplified drawings should be prepared for the expert panel meetings to facilitate the safety-significance categorization process. The worksheets are described in Section 3.6.2. Examples of completed worksheets are shown in Appendix B. In addition, information on piping reliability should be provided and discussed. An example is provided in Table 3.6-11.

As part of the Surry Unit 1 expert panel process, a summary of each system was prepared to aid in the expert panel's deliberations. An example for one of these system summaries is provided in Table 3.6-12.

3.6.4 Millstone Unit 3 Results

The results of the categorization of the piping segments for Millstone Unit 3 are shown in Table 3.6-13. A summary of the high safety-significant piping segments and the basis for the determination is provided in Table 3.6-14. A comparison of the results of the expert panel safety significance determination and the risk importance measure determination is shown in Table 3.6-15.

This comparison shows good agreement between the piping segments chosen by the expert panel and those identified in the various sensitivity studies. The piping segments that were not identified as high safety-significant by the expert panel were those piping segments with RRW values below the 1.005 threshold value. The piping segments chosen by the expert panel show that the expert panel incorporates deterministic considerations.

Table 3.6-11 EXAMPLE PIPING RELIABILITY REMARKS USED IN MILLSTONE UNIT 3 EXPERT PANEL PROCESS
System Design and Operation
Segment 0 is the RWST suction line to the RHR pumps. The remaining segments are portions of the safety injection pathways from the accumulators, high head pumps or RHR pumps through to the RCS cold legs. Segments 5 through 8 are ASME Class 1; the others are ASME Class 2. Except for the RWST suction line, the piping is of heavy wall type 316 stainless steel construction. The 24" suction line is type 304 standard wall near the tank and heavy wall for the buried yard piping. Except in accident response scenarios, the system is operated only during system test and RHR shutdown cooling. Segment 0 sees no significant cyclic loading. The system normal operating cycles for the remaining segments are primarily due to RHR operation, and the temperature range is about 250°F. The accumulator lines (ECCS-5 -> ECCS-8) see a static pressure head with no flow during normal operation. They see static bending loads once per RHR and plant heatup cycle. During test of the accumulators there is transient loading as the lines discharge very quickly. During accumulator discharge following a LOCA, there may be some RCS chugging which may impose transient loading on the accumulator lines.
Possible Failure Modes
Segment 0 could be damaged by an earthquake severe enough (beyond the design basis) to displace or deform the RWST near the piping connection, or the buried portion could be subject to corrosion despite being coated. For eight segments in the RHR flow path the most likely failure mode is thermal fatigue causing undetected crack growth. Excess thermal fatigue might be caused by snubbers locking up. Back leakage through check valve 8948 combined with bonnet leakage through an upstream check could cause thermal cycling. No known failures.
Failure Scenario and Break Probabilities
Possible pipe break failure on demand during LOCA accident due to system startup transient loading or earthquake, causing undetected crack to propagate into full break. For the stainless steel piping material of this system it is likely that leakage would precede a break. Leakage in segments ECCS-5 -> 8 would be detected by a drop in accumulator level. Pipe break failure probabilities are calculated to be very low by probabilistic fracture mechanics program, and this result is confirmed by experience and judgment.

Table 3.6-12 EXAMPLE SYSTEM SUMMARY USED IN SURRY EXPERT PANEL PROCESS	
REACTOR COOLANT	
Summary of Functions	
The reactor coolant system transfers the heat produced by the nuclear reaction in the core to the steam generators, where steam is generated to drive the turbine generator. The water also acts as a neutron moderator, reflector, and a solvent for the neutron absorber. The piping provides a boundary for containing the primary coolant under operating pressures and temperatures. It serves to confine radioactive material and limits its uncontrolled release to the secondary system and to other parts of the unit. A portion of the reactor coolant piping is used by the safety injection system to deliver cooling water to the core for emergency core cooling during a loss-of-coolant accident (LOCA). The reactor vessel is the only component of the reactor coolant system that is exposed to a significant level of neutron irradiation. It is therefore the only component that is subject to any appreciable material irradiation effects. Pressure control during normal operation is facilitated by pressurizer heater banks and the pressurizer spray valves. The PORVs provide overpressure protection during normal operation along with the pressurizer safeties. The PORVs also provide overpressure mitigation during shutdown conditions.	
Maintenance Rule Summary	
The maintenance rule program identified 22 functions for the RC system, of these the following functions were considered risk significant:	
MR Function #	Description
RC002	The RC system provides a closed pressure boundary that limits the leakage or discharge of radioactive coolant into the containment, into the turbine cycle (e.g., the steam and feedwater systems), and into interconnecting supporting and supported systems.
RC006	The RC system provides system overpressure protection, including both normal operating & low temperature conditions.
RC012	The RC system reliably transfers core-generated nuclear heat and work input by the RCPs into the MS system for generating electrical power during normal power operation.

Table 3.6-12 (cont.) EXAMPLE SYSTEM SUMMARY USED IN SURRY EXPERT PANEL PROCESS	
RC017	The RC system provides a means to depressurize in an accident using PORVs.
RC018	The RC system provides pressurizer spray for depressurization in an accident.
RC020	The cavity seal ring provides fluid boundary to maintain Rx cavity water level during RFO.
RC021	The fuel assemblies provide fission product barrier.
The risk significant functions were modeled in the PSA, except for functions RC020 & RC021.	

Risk Informed ISI Summary

Current Scope

The system is currently in the ASME Section XI program in part. Piping connected to the pressurizer relief tank is currently excluded.

For this system 96 segments were identified.

Consequence Evaluation

The direct consequences modeled were associated with LOCAs (large, medium, and small) as an initiating event. The model assumed large pipe could have all three type LOCAs, medium pipe both medium and small LOCAs and small pipe only small LOCAs. No indirect consequences were assumed. In general consequence is high.

Failure Probability Evaluation

Failure mechanisms were identified associated with thermal stratification and striping. These mechanisms were localized to the 6 inch safety injection piping (high head) and the pressurizer surge line. No credit was taken for the current monitoring programs. Some sensitized stainless steel is also in the system. Credit was taken for the associated augmented program for sensitized stainless steel. In general the failure probabilities were moderate to low. The SRRA code was used for all segments in the system.

Table 3.6-12 (cont.)
EXAMPLE SYSTEM SUMMARY USED IN SURRY EXPERT PANEL PROCESS

Risk Significance Determination

Based on the risk calculations, the results for the RC system are:

- CDF without operator action = 1.61E-6 (total CDF = 6.3E-5)
- CDF with operator action = 1.60E-6 (total CDF = 4.1E-6)
- LERF without operator action = 4.56E-9 (total LERF = 5.2E-6)
- LERF with operator action = 4.54E-9 (total LERF = 4.5E-7)

The following segments were identified to be High Safety Significant based on RRW > 1.005:

- RC-016, 017, 018, 019, 037, 038, 039, 041, 042, 043 (CDF - OP Act, moderate to high conditional consequence & moderate failure probability)

The following segments were considered to be in the grey area (RRW between 1.004 and 1.001):

RC-001, 002, 003, 004, 005, 006, 007, 008, 009, 010, 012, 013, 014, 015, 027, 028, 029, 057, 060A, 061 (CDF - OP Act, moderate to high consequence & moderate failure probability)

Other Deterministic Considerations

- Contributes about 7% to small and medium break LOCA seismic CDF. Minimal contribution to large break LOCA seismic CDF.
- Not considered a significant contributor to external flood or fire events.
- Shutdown LOCA less likely than at power LOCA since pressure reduced.
- Temperature averages between 547 and 573 F at 2235 psig during normal operation. Chemistry controlled to reduce corrosion potential.
- LOCA described in UFSAR chapter 14. Second barrier provided in defense of fission product release.
- There are segments separated by check valves.
- No containment penetrations require evaluation.

Table 3.6-13 MILLSTONE UNIT 3 NUMBER OF SEGMENTS DEFINED FOR EACH SYSTEM AND HIGH SAFETY-SIGNIFICANT SEGMENTS DEFINED BY EXPERT PANEL		
System	Number of Segments	High Safety Significant Segments
BDG (SG Blowdown)	4	0
CCE (CHS Cool)	2	0
CCI (SI Cool)	with SIH	--
CCP (CCW)	14	4
CHS (CVCS)	23	4
CNM (Condensate)	with FWS	--
DTM (Turbine Plant Drains)	with MSS	--
ECCS	9	1
EGF (DG Fuel)	4	0
FWA (Aux Feed)	15	5
FWS (Feedwater)	19	0
HVK (Control Bldg. Chilled Water)	1	0
MSS (Main Steam)	30	0
QSS (Quench)	5	1
RCS	66	55
RHS (RHR)	with SIL	--
RSS (Recirc)	11	1
SFC (Fuel Pool)	4	0
SIH (HPI)	10	4
SIL (LPI)	13	5
SWP (SW)	29	16
TOTAL	259	96 (37%)

Table 3.6-14 MILLSTONE UNIT 3 SUMMARY OF HIGH SAFETY-SIGNIFICANT SEGMENTS		
Segment IDs	**Description of Segments**	**Basis for Safety Significance**
CCP-1, 2, 4, 5	Suction and discharge lines for the CCP pumps and heat exchangers	Loss of the only operable train of CCP during shutdown (CCP cools RHR heat exchangers)
CHS-3	Charging pump suction and discharge piping, mini flow lines	Loss of all charging. Loss of RWST outside containment at-power and shutdown, reactor trip
CHS-5	Charging to RCP seal injection	Loss of all charging. Loss of RWST outside containment at-power and shutdown, reactor trip
CHS-7	Normal charging line	Loss of all charging. Loss of RWST outside containment at-power and shutdown, reactor trip
CHS-23	Cold leg safety injection	Loss of RWST outside containment at-power and shutdown
ECCS-0	Piping between RWST and splits to LPSI, HPSI and charging	Loss of RWST outside containment at-power and shutdown
FWA-7	Piping from DWST through turbine driven FWA pump to SG feed split	Loss of DWST within short period of time. No operator action for aligning CST credited
FWA-12,14,16,18 Note: FWA-13, 15, 17, 19 are low safety-significant, but the feedwater nozzles should be in the inspection program	From check valves to cavitating venturi before SG	Loss of DWST within short period of time. No operator action for aligning CST credited
QSS-2	V32 to containment boundary past MOV34A&B and to V42 & V43	Loss of RWST outside containment at power and shutdown
RCS-1, 8, 9, 16, 23	Hot leg from vessel to loop isolation valve	High failure probability, high consequences from a large loss of coolant accident (LOCA)
RCS-2, 10, 17, 24	Hot leg from loop isolation valve to steam generator	High failure probability, high consequences from a large LOCA
RCS-3, 11, 18, 25	Crossover leg from steam generator to RCP	High failure probability, high consequences from a large LOCA
RCS-4, 12, 19, 26	From crossover leg tee to loop fill line isolation valve	High consequences from a medium LOCA, unisolable break
RCS-5, 13, 20, 27	Cold leg from RCP to loop isolation valve	High failure probability, high consequences from a large LOCA
RCS-6, 14, 21, 28	Cold leg from loop isolation valve to reactor vessel	High failure probability, high consequences from a large LOCA

Table 3.6-14 (cont.) MILLSTONE UNIT 3 SUMMARY OF HIGH SAFETY-SIGNIFICANT SEGMENTS		
Segment IDs	**Description of Segments**	**Basis for Safety Significance**
RCS-7, 22, 29, 54	ECCS cold leg injection line from last check valve to cold leg	High consequences from a large LOCA
RCS-15, 49, 60, 66	Charging line from last check valve to cold leg	High consequences from a large LOCA
RCS-30	Pressurizer surge line	High consequences from a large LOCA
RCS-31, 32, 33	From pressurizer to pressurizer safety valves	High consequences from a medium LOCA, unisolable break
RCS-34	From pressurizer to PORV block valves	High consequences from a medium LOCA, unisolable break
RCS-35, 36	Lines between PORV block valves and PORVs	High consequences from a medium LOCA
RCS-38	From loop drain line isolation valves to crossover leg and cold leg	High consequences from a medium LOCA, unisolable break
RCS-40	Pressurizer spray lines from last valves to pressurizer	High consequences from a medium LOCA, unisolable break
RCS-42, 61	Hot leg high/low pressure safety injection line from last isolation valve to hot leg	High consequences from a large LOCA
RCS-43, 51, 56, 62	Cross-connect line from hot loop isolation valve to cold leg loop isolation valve	High failure probability (43, 56 only), high consequences from a large LOCA
RCS-45, 53	Pressurizer spray line	High consequences from a medium LOCA, unisolable break
RCS-47, 64	Charging line from last check valve to cold leg	High consequences from a medium LOCA, unisolable break
RCS-50, 55	From hot leg to high/low pressure safety injection check valve	High consequences from a LOCA, unisolable break
RCS-58	Normal letdown line to first isolation valve	High consequences from a medium LOCA, unisolable break
RSS-11	Cross-connect between SIL and SIH pumps	Loss of all charging and loss of RWST at power and shutdown
SIH-1	From RWST isolation MOV to SI pump suction isolation MOV	High consequence, loss of RWST outside containment
SIH-2, 3	From SI pump suction isolation MOV to SI pump discharge isolation MOV	Loss of RWST outside containment at power and shutdown
SIH-4	From high pressure SI header isolation MOVs to injection line check valves	Loss of RWST, both SI pumps injecting to break location

Table 3.6-14 (cont.) MILLSTONE UNIT 3 SUMMARY OF HIGH SAFETY-SIGNIFICANT SEGMENTS		
Segment IDs	**Description of Segments**	**Basis for Safety Significance**
SIL-1, 2	From RWST isolation MOV though RHR pump and HX to RHR discharge isolation MOVs	High consequence, loss of RWST outside containment, loss of RHR (shutdown impact)
SIL-3	From RHR discharge header isolation MOVs to hot leg injection isolation MOV	High consequence, loss of RWST outside containment (no shutdown impact)
SIL-4, 5	From cold leg injection isolation MOV to injection line check valves	High consequence, loss of RWST inside containment, loss of RHR (shutdown impact)
SWP-1, 2, 3, 4, 26, 27, 28, 29	Service water pump discharge	Importance of one SW pump train during shutdown (results in loss of operating RHR train and a loss of cooling to the Diesel Generator)
SWP-5, 6, 7, 8	Service water pump discharge	Loss of the only operable SW pump train during shutdown (results in loss of operating RHR train and a loss of cooling to the Diesel Generator)
SWP-15, 22	Service water pipe to CCE heat exchangers	Loss of charging, reactor trip
SWP-23,25	Service water through CCP heat exchangers to circ. water discharge	Loss of the only operable SW pump train during shutdown (results in loss of operating RHR train and a loss of cooling to the Diesel Generator)

Table 3.6-15
MILLSTONE UNIT 3
COMPARISON OF EXPERT PANEL AND RISK CALCULATIONS
IN SAFETY SIGNIFICANCE DETERMINATION
SEGMENTS WITH RRW > 1.001

System	Expert Panel	Base Model Without Operator Action	With Operator Action	Using Leak Probabilities	Using Actual Failure Probabilities	Increasing FAC for MSS, FWS & SWP
BDG	NONE	NONE	NONE	NONE	NONE	NONE
CCE	NONE	NONE	NONE	NONE	NONE	NONE
CCP	CCP-1,2,4,5	NONE	NONE	NONE	NONE	NONE
CHS	CHS-3,5,7,23	CHS-3,5,7,23	NONE	NONE	CHS-3	CHS-3,5,7,23
ECCS	ECCS-0	ECCS-0,5,6,8	ECCS-0,1,2,3, 4,5,6,7,8	NONE	NONE	ECCS-0
EGF	NONE	NONE	NONE	NONE	NONE	NONE
FWA	FWA-7, 12,14,16,18	FWA-1,4,7, 12,14,16,18	FWA-7, 12,14,16,18	FWA-7	FWA-1,4,7	FWA-7,12,14,16,18
FWS	NONE	NONE	NONE	NONE	NONE	NONE
HVK	NONE	HVK-1	HVK-1	NONE	HVK-1	NONE
MSS	NONE	NONE	NONE	NONE	NONE	NONE
QSS	QSS-2	QSS-2	QSS-2	NONE	NONE	QSS-2
RSS	RSS-11	RSS-11	NONE	NONE	NONE	RSS-11
SFC	-	-	-	-	-	-
SIH	SIH-1,2,3,4	SIH-1,2,3,4	NONE	SIH-2,3	SIH-2,3	SIH-1,2,3,4
SIL	SIL-1,2,3,4,5	SIL-1,2,3,4,5	SIL-3,9,10, 11,12	NONE	NONE	SIL-1,2,3,4,5

Table 3.6-15 (cont.) MILLSTONE UNIT 3 COMPARISON OF EXPERT PANEL AND RISK CALCULATIONS IN SAFETY SIGNIFICANCE DETERMINATION SEGMENTS WITH RRW > 1.001						
System	Expert Panel	Base Model Without Operator Action	With Operator Action	Using Leak Probabilities	Using Actual Failure Probabilities	Increasing FAC for MSS, FWS & SWP
SWP	SWP-1,2,3,4, 5,6,7,8,15,22,23, 25,26,27,28,29	SWP-1,2,3,4, 5,6,7,8,23,25, 26,27,28,29	SWP-1,2,3,4, 5,6,7,8,15,22, 26,27,28,29	SWP-1,2,3,4,5, 6,7,8,23,25,26,27, 28,29	SWP-1,2,3,4, 6,8,26,27,28,29	SWP-1,2,3,4,5, 6,7,8,15,22,23,25, 26,27,28,29
RCS	RCS-1,2,3,4, 5,6,7,8,9,10, 11,12,13,14, 15,16,17,18, 19,20,21,22, 23,24,25,26, 27,28,29,30, 31,32,33,34, 35,36,38,40, 42,43,45,47, 49,50,51,53, 54,55,56,58, 60,61,62,64,66	RCS-1,2,3,5, 6,8,9,10,11, 13,14,16,17, 18,20,21,23, 24,25,27,28, 43,56	RCS-1,2,3,5, 6,8,9,10,11, 13,14,16,17, 18,20,21,23, 24,25,27,28, 43,56	RCS-11,17,18,25	RCS-1,2,3,5, 6,8,9,10,11,13,14, 16,17,18,20,21,23, 24,25,27,28,43,56	RCS-18

*Segment with RRW values > 1.001 from the base model without operator action that were not chosen to be high safety-significant by the expert panel include:

Segment	RRW
ECCS-5	1.001
ECCS-6	1.001
ECCS-8	1.001
FWA-1	1.002
FWA-4	1.002
HVK-1	1.002

3.6.5 Surry Unit 1 Pilot Plant Results

The results of the categorization of the piping segments for Surry Unit 1 are shown in Table 3.6-16. A summary of the high safety significant segments and the basis for the determination is shown in Table 3.6-17. A comparison of the results of the expert panel safety significance determination and the risk importance measure determination is shown in Table 3.6-18.

This comparison shows good agreement between the piping segments chosen by the expert panel and those identified in the various cases. For Surry Unit 1, several piping segments that were identified through the calculations to be high safety significant were determined by the panel to either have a lesser consequence or inappropriate failure mechanism which resulted in the change to the categorization. In other instances, piping segments which were identified through the calculations to be low safety significant were assigned to the high safety significance category because of more severe consequences postulated or the consideration of other deterministic insights.

TABLE 3.6-16 SURRY UNIT 1 SUMMARY OF HIGH SAFETY SIGNIFICANT SEGMENTS AS DETERMINED BY PLANT EXPERT PANEL			
System	Number of Segments	Number of High Safety Significant Segments	Number of Low Safety Significant Segments
ACC	15	0	15
AFW	32	11	21
AS	2	2	0
BD	12	6	6
CC	66	6	60
CH	44	8	36
CN	9	0	9
CS	16	0	16
CW	16	4	12
ECC	8	7	1
EE	7	0	7
FC	9	0	9
FW	20	13	7
HHI	27	14	13
LHI	18	7	11
MS	38	3	35
RC	96	11	85
RH	11	4	7
RS	13	2	11
SW	54	8	46
VS	2	2	0
TOTAL	515	108	407

Table 3.6-17 SURRY UNIT 1 SUMMARY OF HIGH SAFETY-SIGNIFICANT SEGMENTS		
Segment IDs	**Description of Segments**	**Basis for Safety Significance**
AFW-4,5,6	AFW pumps to check valves	Loss of emergency condensate storage tank (CST) and all flowpaths to each AFW pump; High leak probability from corrosion
AFW-15,16,17,18,19	Piping between check valves and MOVs	Loss of emergency CST and all auxiliary feedwater, including crosstie from Unit 2; flow-assisted corrosion (FAC) program needs to continue
AFW-30,31,32	Piping from check valves to manual valves	Loss of turbine-driven AFW pump and motor-driven AFW pump oil cooler; possible water spray impact resulting in loss of all AFW pumps
AS-1	Piping above the component cooling water pumps	Indirect effect of spray and jet impingement on component cooling water (CCW) pumps, Unit 1 CCW system disabled
AS-2	Piping above component cooling pumps; piping under power cables to the charging pump	Indirect effect of spray and jet impingement on 3 CCW pumps and 1 charging pump
BD-2B,3,5B,6,8B,9	Containment penetration to containment isolation valve, piping beyond outside containment isolation valves	Loss of containment integrity, small steam line break outside containment with no reactor trip, loss of blowdown, loss of SG isolation on steam generator tube rupture (SGTR); indirect effects of spray and jet impingement on CCW supply, main steam (MS) trip valve, 3 safety injection (SI) MOVs
CC-25, 30, 33	CCW for the RCPs from containment penetration	Loss of Unit 1 and 2 CCW systems, loss of cooling to the RCP motors causing reactor trip, previous leaks on line
CC-28A, 28B	CCW pipe on the discharge of RCPs	Loss of Unit 1 and 2 CCW systems inside containment, loss of cooling to the RCP motors causing reactor trip, potential thermal barrier leak
CC-29	CCW pipe on the RCPs thermal barrier discharge paths	Loss of Unit 1 and 2 CCW systems, loss of cooling to the RCP motors causing reactor trip, potential thermal barrier leak

Table 3.6-17 (cont.) SURRY UNIT 1 SUMMARY OF HIGH SAFETY-SIGNIFICANT SEGMENTS		
Segment IDs	Description of Segments	Basis for Safety Significance
CH-5	Containment penetration for RCP seal injection return to MOV	Indirect effects of spray and jet impingement causing loss of CCW to RHR, 3 MS trip valves, 3 SI MOVs, one blowdown MOV
CH-7A,8,9,10	Bypass line on seal return from RCPs; piping to RCP seals between 3 pump casings and check valves	Line failure results in small LOCA; vibratory fatigue concerns
CH-11,12,13	Seal injection path between containment penetration	Loss of charging system support to RCPs; vibratory fatigue concerns
CW-5,6,7,8	Condenser circulating water (CW) supply header from intake structure to intersection of	Loss of each CW header to condenser, loss of cooling to recirc spray heat exchangers (HX); loss of service water supply to bearing cooling HX and emergency switch gear chillers; indirect effects from flooding
ECC-0	Piping from refueling water storage tank (RWST) to check valves	Loss of RWST outside containment; crosstie to Unit 2 would not automatically activate
ECC-1,2,3	Piping to cold legs between 1st and 2nd isolation (check) valves	Loss of RWST inside containment; potential inter-system (IS) LOCA initiating event; degradation of cold leg injection; only one injection path to a cold leg, flow restrictors limit flow; common mode failure mechanism
ECC-5,6,7	Piping to hot legs between 1st and 2nd isolation (check) valves	Loss of injection to each hot leg on recirculation from high and low pressure trains; Potential ISLOCA initiating event; degradation of hot leg injection path
FW-1,2,3,4,5,6,7	From feedwater (FW) headers to 18x24 reducer; supply lines to FW pumps; recirculation header to condenser; FW pump discharge header	Loss of main feedwater
FW-12,13,14,15,16,17	Feedwater header to steam generators	Loss of main feedwater
HHI-1,2,3	Piping from RWST to suction of charging pumps	Loss of RWST and loss of Unit 2 RWST cross-connect to charging pumps

Table 3.6-17 (cont.) SURRY UNIT 1 SUMMARY OF HIGH SAFETY-SIGNIFICANT SEGMENTS		
Segment IDs	**Description of Segments**	**Basis for Safety Significance**
HHI-4C,5C,6C	Discharge piping from charging pumps	Loss of RWST, loss of Unit 2 RWST cross-connect to Unit 1 charging pumps and loss of Unit 2 charging pumps cross-connect to unit, loss of volume control tank (VCT) and boric acid tank (BAT) to the charging pumps
HHI-8,9	Normal charging/injection to cold and hot legs/seal injection between several valves	Loss of RWST outside containment, loss of Unit 2 RWST cross-connect to Unit 1, and loss of Unit 2 charging pumps cross-connect; loss of VCT and BAT
HHI-10,11	Normal injection paths to cold legs between several valves and containment	Loss of RWST outside containment, loss of Unit 2 RWST cross-connect to Unit 1, and loss of Unit 2 charging pumps cross-connect; potential interruption of high head flow until operator recognizes, isolates and aligns alternate charging
HHI-12A	To cold legs between several valves	Loss of all cold leg injection
HHI-13,15	Alternate/normal injection path to cold/hot legs between MOVs and containment	Loss of RWST outside containment, loss of Unit 2 RWST cross-connect to Unit 1, and loss of Unit 2 charging pumps cross-connect, and loss of alternate path of HHSI to cold legs; indirect effects from spray and jet impingement on CCW supply and several MOVs
HHI-17	Normal injection path to hot legs between MOV and containment	Loss of containment sump inventory if MOV is open; loss of alternate path of HHSI to hot legs (but normal path available) if MOV is closed
LHI-3,4	Containment sump to MOV	Loss of recirculation from each low pressure injection train
LHI-7,8	Train B/A from check valve to HPI suction MOV, RWST recirc, hot leg injection MOV and cold leg injection	Loss of RWST outside containment. Break momentarily disrupts flow. Large break LOCA - LH pumps most important depending on timing, HH pumps could provide core cooling.

Table 3.6-17 (cont.) SURRY UNIT 1 SUMMARY OF HIGH SAFETY-SIGNIFICANT SEGMENTS		
Segment IDs	**Description of Segments**	**Basis for Safety Significance**
LHI-9,10	Cold leg injection from SI-MOVs to SI-MOV and CV SI valves	Loss of RWST outside containment. Break momentarily disrupts flow. Large break LOCA - LH pumps most important depending on timing, HH pumps could provide core cooling.
LHI-18	Piping from 1-SI-MOVs to 1-CH-MOVs	Loss of RWST outside containment and loss of Unit 2 cross connection; Loss of low and high pressure recirculation. Break momentarily disrupts flow. Large break LOCA - LH pumps most important depending on timing, HH pumps could provide core cooling.
MS-32	Common main steam supply header to turbine driven AFW pump from check valves to normally closed valves and steam trap	Main steam line break (MSLB) outside containment. Jet impingement from MS line crack would damage all components in MS valve house (all 3 AFW pumps, both containment spray pumps, 3 MS relief valves. Concern also in blowing down all 3 steam generators. (FAC program currently in place).
MS-33,34	Common main steam supply header to the turbine driven AFW pump from normally closed valves	Loss of main steam to turbine-driven AFW pump. MSLB outside containment. Jet impingement from MS line crack would damage all components in MS valve house (all 3 AFW pumps, both containment spray pumps, 3 MS relief valves.
RC-16,17,18	Safety injection from first isolation check valve to Reactor coolant system loop hot leg	Potential large, medium, or small LOCA depending on break size with a potential for striping/stratification and thermal fatigue.
RC-37,38,39	Loop fill header from Reactor Coolant System to cold leg.	Potential small LOCA with high potential for vibratory fatigue
RC-41,42,43	Safety injection from first isolation check valve to reactor coolant loop cold leg.	Potential large, medium, or small LOCA depending on break size with a potential for striping/stratification
RC-58,59	From PORV block valve to pressurizer PORV.	Loss of cold overpressure mitigation capability during shutdown

Table 3.6-17 (cont.) SURRY UNIT 1 SUMMARY OF HIGH SAFETY-SIGNIFICANT SEGMENTS		
Segment IDs	Description of Segments	Basis for Safety Significance
RH-2	Header line between the two Residual Heat Removal suction isolation valves	Loss of RHR during steam generator tube rupture (leads to LERF). Also loss of RHR and potential LOCA during shutdown
RH-3	From Residual heat removal suction isolation valves through pumps and heat exchangers to discharge motor operated valves	Loss of RHR during steam generator tube rupture (leads to LERF). Also loss of RHR and potential LOCA during shutdown
RH-3B	Line off main RHR header after RHR heat exchangers to RWST return line isolation valve.	Loss of RHR during steam generator tube rupture (leads to LERF). Also loss of RHR and potential LOCA during shutdown
RH-11	RWST return line between two isolation valves and through containment penetration	Loss of containment boundary if the path is open. Previous containment integrity issue
RS-3A,4A	From containment sump penetration to pump inlet isolation valve	Loss of ORS pumps. Containment penetration. Failure could lead to direct release outside containment (LERF).
SW-4,5,6	From service water pump discharge through the diesel cooler and shaft bearing oil cooler to the intake structure	Loss of one service water pump with wastage potential; previous fiberglass failures at plant
SW-44,45	Line from header to the charging pump intermediate seal cooler	Loss of cooling to one of the charging pumps; potential spray may disable all charging pumps
SW-46,47	From charging pump intermediate seal cooler to discharge header	Loss of cooling to one of the charging pumps; potential spray may disable all charging pumps
SW-54	Charging pump cooler discharge header to unit 1 and Unit 2 isolation valves to main discharge header	Loss of cooling to one of the charging pumps; potential spray may disable all charging pumps
VS-1	Makeup supply to surge tank	Loss of Units 1 and 2 control Rooms and Emergency Switchgear Rooms Water Cooled Chillers
VS-2	The main piping of the chilled water system	Loss of Units 1 and 2 control Rooms and Emergency Switchgear Rooms Water Cooled Chillers

Table 3.6-18
SURRY UNIT 1
COMPARISON OF EXPERT PANEL AND RISK CALCULATIONS (NOTE 1)
IN SAFETY SIGNIFICANCE DETERMINATION

System	Expert Panel Final Decision	CDF Without Operator Action	CDF With Operator Action	LERF WIthout Operator Action	LERF With Operator Action	No Credit for Augmented Programs (Note 2)
ACC	None	None	None	None	None	None
AFW	AFW-4, 5, 6, 15, 16, 17, 18, 19, 30, 31, 32	AFW-15, 16, 17, 18, 19	AFW-4, 5, 6	AFW-15, 16, 17, 18, 19	AFW-4	AFW-15, 16, 17, 18, 19 (CDF/LERF - No Op. Act.), 28 (CDF-Op. Act)
AS	AS-1, 2	None	None	None	AS-1, 2	None
BD	BD-2B, 3, 5B, 6, 8B, 9	None	BD-002B, 003, 005B, 006, 008B, 009	BD-002B, 003, 005B, 006, 008B, 009	BD-002B, 003, 005B, 006, 008B, 009	BD-002B, 003, 005B, 006, 008B, 009 (CDF/LERF - No Op. Act./Op. Act.)
CC	CC-25, 28A, 28B, 29, 30, 33	None	None	None	CC-25, 30, 33	None
CH	CH-5, 7A (Note 3), 8, 9, 10, 11, 12, 13	None	CH-008, 009, 010	None	None	CH-008, 009, 010 (CDF-Op. Act.)
CN	None	CN-008	CN-008	CN-008	None	CN-008 (CDF/LERF - No Op. Act.)
CS	None	None	None	None	None	None
CW	CW-5, 6, 7, 8	None	CW-5, 6, 7, 8	None	None	None

Table 3.6-18 (cont.)
SURRY UNIT 1
COMPARISON OF EXPERT PANEL AND RISK CALCULATIONS (NOTE 1)
IN SAFETY SIGNIFICANCE DETERMINATION

System	Expert Panel Final Decision	CDF Without Operator Action	CDF With Operator Action	LERF WIthout Operator Action	LERF With Operator Action	No Credit for Augmented Programs (Note 2)
ECC	ECC-0, 1, 2, 3, 5, 6, 7	None	None	None	None	None
EE	None	None	None	None	None	None
FC	None	N/A	N/A	N/A	N/A	N/A
FW	FW-1, 2, 3, 4, 5, 6, 7, 12, 13, 14, 15, 16, 17	None	FW-12, 13, 14	None	FW-1, 2, 5, 12, 13, 14	FW-1, 2, 5 (LERF-Op. Act.), 12, 13, 14 (CDF-No Op. Act., CDF/LERF-Op. Act.), 15, 16, 17 (CDF-Op. Act.)
HHI	HHI-1, 2, 3, 4C, 5C, 6C, 8, 9, 10, 11, 12A, 13, 15, 17	None	HHI-10, 12A, 13, 15, 17	None	HHI-10, 12A, 13, 15, 17	HHI-4A (CDF/LERF-No Op. Act.), 12A (CDF/LERF-No Op. Act./Op. Act.)
LHI	LHI-3, 4, 7, 8, 9, 10, 18	None	None	None	None	None
MS	MS-32, 33, 34	None	MS-33, 34	None	MS-33, 34	MS-32 (CDF-Op. Act.), 33, 34 (CDF-No Op. Act., CDF/LERF-Op. Act.)

Table 3.6-18 (cont.) SURRY UNIT 1 COMPARISON OF EXPERT PANEL AND RISK CALCULATIONS (NOTE 1) IN SAFETY SIGNIFICANCE DETERMINATION						
System	Expert Panel Final Decision	CDF Without Operator Action	CDF With Operator Action	LERF WIthout Operator Action	LERF With Operator Action	No Credit for Augmented Programs (Note 2)
RC	RC-16, 17, 18, 37, 38, 39, 41, 42, 43, 58, 59 (Note 4)	None	RC-16, 17, 18, 19, 37, 38, 39, 41, 42, 43	None	None	RC-16, 17, 18, 41, 42, 43 (CDF-Op. Act.)
RH	RH-2, 3, 3B, 11	None	RH-003B	RH-003B	RH-003, 003B	RH-003B (LERF-No Op. Act./Op. Act.)
RS	RS-3A, 4A	None	None	None	None	None
SW	SW-4, 5, 6, 44, 45, 46, 47, 54 (Note 5)	SW-18, 19, 20, 21, 22, 23, 24, 25	SW-04, 05, 06	SW-18, 19, 20, 21, 22, 23, 24, 25	None	SW-18, 19, 20, 21, 22, 23, 24, 25 (CDF/LERF-No Op. Act.)
VS	VS-1, 2	VS-2	None	VS-2	None	VS-2 (CDF/LERF-No Op. Act.)

Notes for Table 3.6-18:

1. For risk calculations, the segments identified as high safety significant had calculated values for RRW of greater than 1.005.
2. No segments other than those piping segments already in an augmented program were identified.
3. During the expert panel meeting, segment CH-07 was subdivided into 2 segments, CH-07A and CH-07B. The consequences for CH-07A were identified to be commensurate with CH-08 and thus was identified as a high safety significant segment.
4. During the expert panel meeting, the failure mechanism and thus the probability for segment RC-19 was determined to not be appropriate for the Surry plant. Therefore, the failure probability was reduced and the segment became low safety significant.
5. During the expert panel meeting, the failure mechanism and thus the probability for segments SW-18,19, 20, 21, 22, 23, 24 and 25 was determined to not occur because of the coating on the inside of the piping. Therefore, the failure probability was reduced and the segments became low safety significant.

3.7 STRUCTURAL ELEMENT SELECTION

The risk-informed selection process includes assessments and evaluations of the piping structural elements in each of the high-safety-significant piping segments. These structural elements include the following examination items:

(1) all piping welds, including those to nozzles, valves and fittings such as elbows, tees, reducers, branch connections, and safe ends

(2) areas and volumes of base material and examination zones, such as weld counterbore areas and fitting material of the items given in (1), as appropriate.

Welded attachments and piping supports are not included in the assessment and evaluations.

An engineering subpanel, which is sometimes called the "component ISI team" or "focused structural element expert panel" performs the review of the piping segments to select the important structural elements for inspection. The panel should have the following expertise:

- Inservice inspection program
- Nondestructive examination methods
- Piping stress & materials
- Plant/industry failure, repair & maintenance experience

3.7.1 Structural Element Selection Matrix

At this stage in the process, the plant expert panel has reviewed all pertinent information and determined the final safety category for each piping segment included within the scope of the RI-ISI program. The panel has used qualitative and quantitative information associated with probabilistic safety assessment (PSA) and failure probability calculations in combination with

deterministic insights and design/licensing bases information to develop the final categories of high safety-significant and low safety-significant piping segments. This information is now used to develop a matrix to assist in the selection of structural elements for examination, as shown in Figure 3.7-1, for all piping included in the RI-ISI program.

The key elements in determining how many structural elements should be selected for examination are based on the safety significance of the segment and the failure importance within that segment.

It is recommended that the attribute of "safety significance" be used rather than "conditional consequence probability." The risk calculations that are used to support the safety significance determination involve combining consequences with pipe failures that are initiating events and/or with pipe failures that occur on demand as a result of a plant event. Deterministic insights and design/licensing bases information also impact the determination of a segment as being high safety- significant. Thus, it is difficult to determine the level of consequence without an evaluation of the above information. In addition, the process is well established for the plant expert panel to identify the segments as high or low safety-significant.

The importance of pipe failure directly drives the need for effective examination methods. This attribute is categorized by a demarcation of "high failure importance" versus "low failure importance" using the following definitions:

High Failure Importance - As determined by the engineering subpanel, a segment meeting this description typically has either an active failure mechanism that is known to exist, which may be currently monitored as part of an existing augmented program, or alternatively may be analyzed as being highly susceptible to a failure mechanism, that could lead to leakage or rupture. The engineering team uses deterministic insights such as material, fluid chemistry, loadings, and inservice experience from the respective plant and industry to make this determination. Examples of failure mechanisms that would typically result in this

	LOW SAFETY SIGNIFICANT	HIGH SAFETY SIGNIFICANT
HIGH FAILURE IMPORTANCE	OWNER DEFINED PROGRAM 3	(A) SUSCEPTIBLE LOCATION(S) (100%) (B) INSPECTION LOCATION SELECTION PROCESS 1
LOW FAILURE IMPORTANCE	ONLY SYSTEM PRESSURE TEST & VISUAL EXAMINATION 4	INSPECTION LOCATION SELECTION PROCESS 2

Figure 3.7-1 Structural Element Selection Matrix

classification are excessive thermal fatigue, corrosion cracking, primary water stress corrosion cracking, intergranular stress corrosion cracking, microbiologically influenced corrosion, erosion-cavitation, high vibratory loadings on small diameter piping, and flow-accelerated corrosion.

Low Failure Importance - As determined by the engineering subpanel, a segment in this category did not meet the above criteria. Examples that would typically result in this classification are no known failure mechanism and fatigue based upon normal and design basis loadings.

Probabilistic insights from the structural reliability/risk assessment (SRRA) model results may also be used in confirming the engineering teams determinations. A segment should be considered to have a "high failure importance" if any location in that segment exceeds the following indicator:

$$P_{LARGE\ LEAK} > 10^{-3} - 10^{-4} \text{ per 40 year operating life}$$

This result is based on probabilistic fracture mechanics studies for fatigue-crack growth. SRRA sensitivity studies (Khaleel and Simonen, 1994) have shown that piping locations with failure probabilities below these values are essentially benign.

As shown in Figure 3.7-1, four regions exist for placing the piping segments. Specific guidelines are provided for selecting the locations for examination within those segments based on the region. The safety significance is based on the assessments of the plant expert panel, and the failure importance is based upon the engineering subpanel assessment, using the SRRA tool as appropriate. Each region has an examination rule base. The following applies:

Region 1 - All susceptible locations in the segment identified by the engineering subpanel as being likely to be affected by a known or postulated failure mechanism, and that are not already in an augmented program, must be examined. Segments with failure modes that have established augmented programs (e.g., flow-accelerated corrosion, intergranular stress-corrosion cracking) would be inspected in accordance with that existing program. Portions of the segment may be affected by a known or postulated failure mechanism; the structural elements where this failure mechanism would first be detected would be inspected. (This portion of the segment is placed in Sub-Region A). Other portions of the piping segment (Sub-Region B) may not be affected but may be subjected to inspection to ensure that the piping segment will maintain its integrity and to account for uncertainty and possible unknown conditions. An acceptable statistical evaluation process may be used to identify how many examination locations are needed.

Region 2 - The engineering subpanel shall select locations for examination in these segments using an acceptable statistical evaluation process. In this region, low failure importance has been identified. In most cases, fatigue is anticipated to be the failure mechanism. Portions of the piping segment that would experience higher loads would generally be selected for inspection. These examinations will account for uncertainty and unknown conditions in the segment.

Region 3 - All susceptible locations in the segment identified by the engineering subpanel as being likely to be affected by a known or postulated failure mechanism, and that are not already in an augmented program, should be considered for examination in accordance with an Owner Defined Program. While failure of these segments would have a minimal safety impact, the impact on plant operations may be significant in terms of unplanned outage time, repair costs, and other consequential impacts.

Region 4 - Only system pressure tests and visual examinations of Class 1, 2, and 3 piping are required for these segments of low failure importance and low safety significance that would be included in an Owner's ISI Program.

System pressure tests and visual examinations shall also be performed for Class 1, 2, and 3 piping segments in Regions 1, 2, and 3.

Essentially, the subpanel is further evaluating the information that has been previously generated to verify and come to a consensus, using sound engineering judgement and discussion, that the most likely locations for potential structural failure within the high safety-significant piping segments are identified and documented.

For Surry Unit 1, the 515 piping segments are placed into the following regions:

Region 1 - 70 segments

Region 2 - 38 segments

Region 3 - 153 segments

Region 4 - 254 segments

3.7.2 Sample Size Selection

A statistical model (Perdue Model) is used to assist in selecting the minimum number of locations to be examined to ensure that an acceptable level of reliability is achieved in the piping of interest. Engineering insights are also used to make the final determination of which locations must be inspected. This process incorporates reliability, confidence, and the

probability of detection (POD) of the examination procedures to identify degradation prior to a through-wall flaw. The model is intended to be used for highly reliable piping segments where cracking is the potential degradation mechanism of interest.

The suggested statistical method makes use of the concept of "consumer risk." Consumer risk is a concept from the field of statistical acceptance (or inspection) sampling that can be defined using the following example: a consumer specifies that a minimum reliability level for a segment (or lot) is x defects. If a sample drawn from that lot is then subjected to inspection and the whole lot is judged to have "passed" if the sample contains no defects, then the consumer risk is the probability that the lot will have more than the x permissible defects. Equivalently, consumer risk is the probability that the inspection plan will allow a lot with an unacceptable level of defects to be accepted.

The Perdue Model has been implemented for statistically evaluating the safety-related reliability afforded by selected alternative sampling plans. The model requires only inputs that are determined through the process or can be obtained from the probabilistic structural mechanics models, such as SRRA. The model's outputs allow conditional probabilistic statements to be made about the likelihood of exceeding any specified reliability target with a proposed sampling-based inspection plan. The use of the binomial and hypergeometric distributions along with application of Bayes theorem are incorporated into the model. Single-sample schemes and double-sample schemes, which reflect the current ASME Section XI requirements for expanding the sample size if an unacceptable flaw indication is found, are also built into the model. The following inputs are required:

Plant: This identifies the plant and/or unit for which the model is applied.

Segment #: This is the name for the lot from which a sample of structural elements (such welds, pipe elbows, branch connections, etc) is to be taken. Generally, each piping segment is defined as a lot. However, segments that are similar (e.g., all the cold legs on each reactor coolant loop with the same postulated failure mechanism) may be combined to define a lot.

Number of Welds or Elements: This is the number of structural elements in the lot.

Probability of a Flaw (@specified year/weld): The probability of an unacceptable flaw in the segment's "most likely to fail" weld (or typical weld, if they are viewed as clones) at the current age of the weld (usually the current age of the plant unless the pipe has been repaired or replaced). An unacceptable flaw is defined by the ASME Section XI Code. This has been defined as $a/t > 0.10$ and is obtained from the probabilistic fracture mechanics code (e.g., SRRA).

Probability of Detection: The estimated probability that the inspection method used will be able to detect an unacceptable flaw, given that the flaw is in the weld selected for sample examination. A low assumed probability of detection (POD) results in conservative confidence levels for the sample plans. A POD of 0.2 is considered to be a conservatively low value.

Conditional Probability of Leak/Year/Weld: This input can also be called the conditional leak rate. A failure of a weld may be defined to be a pipe rupture or, more conservatively, as a pipe leak, the leak being a typical precursor to a rupture. In the Perdue Model this is defined as a leak and the same probabilistic fracture mechanics code (e.g., SRRA) that generates the Probability of a Flaw can generate the leak rate conditional on the existence of the unacceptable flaw. This value is an average yearly leakage rate for the remaining life of the plant.

Single Sample Size: Any sample size that is less than or equal to the number of welds (or elements) in the lot can be selected.

Target Leak Rate/Year/Weld: The maximum allowable leak rate per year per weld. This value is required for the calculation of consumer risk. If the application is limited to calculating the probability distributions on number of flaws or leak rates, then this input is not required. Industry experience, currently being captured in industry pipe failure data base efforts, can be used to provide a basis for this value.

Table 3.7-1 provides some suggested target leak rates based on current operating experience (NRC 1997) that can be evaluated in the Perdue model. The values shown are for illustrative purposes and can be further adjusted based on other factors such as type of failure mechanism of concern. Data from SKI (1996) can be used in this assessment along with other data continuing to be captured in ongoing industry efforts.

Table 3.7-1 SUGGESTED TARGET LEAK RATES (PER YEAR/PER WELD) FOR PERDUE MODEL (NRC 1997)			
	Nominal Pipe Size (inches)		
Material	≤1	1 < Diameter < 4	≥4
Stainless Steel	1.0E-5	1.0E-5	1.0E-6
Ferritic Steel	1.0E-5	1.0E-6	5.0E-6

The outputs from the model are:

Target Leak Rate/Year/Lot: This is equal to the number of welds in the lot times the target leak rate/year/weld.

Implied Leak Rate/Year/Lot: For every possible number of flaws in a lot, there is a corresponding failure or leak rate which is closely approximated by the product of the conditional leak rate/weld and the number of indicated flaws.

Binomial Probability of k Flaws: This is the binomial distribution probability of getting a specified number of flaws (k) based on the lot size and the probability of the flaw existing. The sum of the probabilities is also provided.

Pre-ISI (i.e., no ISI) Probability of k Flaws: This is the cumulative probability distribution of the leak rate in the absence of any inspection.

Single Sample Plan (Probability of Detection (POD) equals 1) Probability of k or Less Flaws: This is the likelihood that the sample plan will pass the lot for the true number of flawed welds. The single sample plan rejects the entire lot if one flaw is found. The lot is accepted if no flaws are found.

Single Sample Plan (User Specified POD) Probability of k or Less Flaws: This is the same type of output as discussed in the previous paragraph except that the POD is specified by the user.

Double Sample Plan (Each Sample Size Equals 1) Probability of k or Less Flaws: This is the likelihood that the sample plan will pass the lot for the true number of flawed welds, using a double sampling as illustrated in Figure 3.7-2. For these probabilities, it is assumed that each sample consists of one weld.

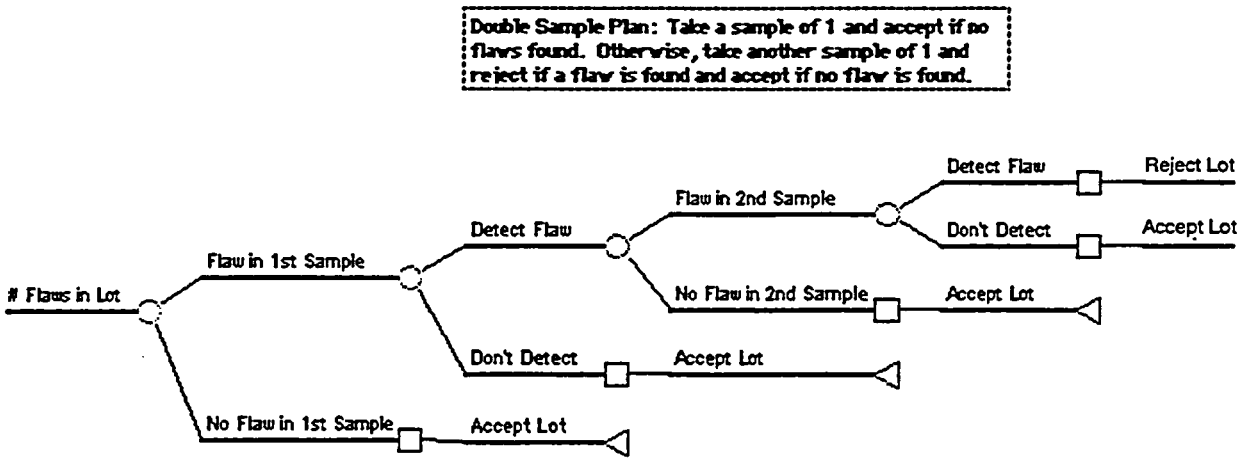

Figure 3.7-2 Decision Tree for a Double Sample of Initial Size=1 (Plan H)
Double Sample Plan: Take a sample of 1 and accept if no flaws found. Otherwise, take another sample of 1 and reject if a flaw is found and accept if no flaw is found.

Double Sample Plan (Each Sample Size Equals 2) probability of k or less flaws: This is the same type of output as discussed for the previous output except that each sample consists of two welds.

Consumer Risk: This is the probability of a leak rate for the lot exceeding the target leak rate for that lot, for each sample plan.

Confidence: This is one minus the consumer risk probability.

Variance: The variance for each plan is determined by using the difference between the mean leak rate and the implied leak rate, and the corresponding binomial probability.

Probability of Sampling 100% of the Lot: This is one minus the probability of accepting the lot calculated for each sample plan.

The model should be used to assist in defending a minimum number of examination locations for the following two situations:

- For highly reliable piping segments (or portions thereof) that have been categorized as high safety significant where examinations may be added, reallocated, or reduced from current ASME Section XI program requirements; a minimum of one location is specified even if the model shows 100% confidence with no ISI.

- For highly reliable piping segments (or portions thereof) that have been categorized as low safety significant where examinations may be reduced from current ASME Section XI program requirements; it is acceptable to define no examinations for these segments as long as a 95% confidence level exists that the piping segment will not exceed its target leak rate.

Use of the model in these two situations will assist in defending that current safety margins are maintained and that defense-in-depth is not compromised by implementation of risk-informed ISI programs for piping versus current ASME Section XI inservice inspection requirements.

Different inputs as may be appropriate for a different segment or lot will produce different outputs for each plan so that a risk profile can be produced on a segment-by-segment basis. These inspection plans are viewed as part of a reliability demonstration process which has the following steps:

- Define appropriate lots for sampling.

- Evaluate the ability of each inspection plan to achieve the target reliability in each lot.

- If a segment is divided into multiple lots, evaluate the ability of the aggregated lot-specific choices to achieve the segment target reliability. This can be estimated by

comparing the product of the individual lot confidences for a given segment to a limit value (95%).

A 95% confidence or assurance that the target leak frequency goal will be met was chosen as an acceptable objective for the segment in question. Both the mean leak rate and the estimated confidence level are used in evaluating the inspection plans. The choice of an acceptable plan also considers the projected number of flaws in conjunction with the leak rate statistics and confidence levels.

For Surry Unit 1, the Perdue model was applied to the high safety significant segments, where appropriate, to assist in defining the minimum number of inspection locations that are required for examination in each segment. More than 60 high safety significant pipe segments were evaluated. In addition, the Perdue model was applied to 75 low safety significant pipe segments where current ASME Section XI nondestructive examinations are recommended to be eliminated from the ISI program at Surry Unit 1. These additional evaluations were performed to verify that the current exams could be eliminated in these segments while maintaining a high level of reliability (i.e., insuring that the leak rate post RI-ISI is no greater than current leak rates).

Table 3.7-2 provides an example of the Perdue model for a Surry-1 high head injection piping segment where the cumulative probability distribution on the number of flaws and implied leak rate is tabulated for each of five candidate inspection plans. The mean annual leak rate for the segment, along with its variance, is also provided for each plan. There is a probability of 99.548% that the target leak rate is met for this segment for the Pre-ISI case (i.e., No ISI). The probability of exceeding the target leak rate (i.e., consumer risk) for the Pre-ISI case is 0.452% as compared to 0.308% for the single sample plan with a POD =1.0. The double sample plan with POD=0.2 yields 0.449% and 0.438% for a sample sizes equal one and two, respectively. A low POD value is assumed to provide a conservative upper bound on exceeding the target leak rate. For example, the consumer risk decreases from 0.430% to 0.308% in the single sample plan when the POD is changed from 0.2 to 1.0. The probability of sampling 100% of the lot in the double sampling plan with a sample size equal to one is 0.33% with the POD=0.2 value.

Table 3.7-2
EXAMPLE APPLICATION OF PERDUE MODEL TO A SURRY UNIT 1 HIGH HEAD INJECTION PIPING SEGMENT

	A	B	C	D	H	L	P	T
1	Perdue Model		Release 1.1	Date: 9/25/1997				
2			User Input					
3	Plant		SURRY					
4	Segment # / Loop #		HHI-012A(BUTT WELD)					
5	Number of Welds		38	Must be >= 4 for double sample plan with 2 welds/sample				
6	Prob. of Flaw @ yr 25/weld		2.87E-01					
7	Probability of Detection		0.2	Make 0 <= POD <= 0				
8	Cond. Prob. of Leak /yr/weld		2.06E-05					
9	Single Sample Size		1	Make sample size < "Number of Welds" & <= 10				
10	Target Leak rate /yr/weld		1.00E-05					
11								
12	Target Leak rate /yr/Lot		3.80E-04	(Calculated)				
13								
14	Double Sampling Plans		For 1 & 2 welds in each sample. Accept # = 0 & Cum Reject # = 2. POD = Cell C7					
15	Single Sampling Plan		Accept # = 0,Reject # = 1. Assumes POD = 100% or cell C7 as identified					
16								
17	Results Summary		SURRY			HHI-012A(BUTT WELD)		
18				D	H	L	P	T
19				Pre-ISI (i.e., No ISI)	Double Sample Plan (Each Sample Size = 1)	Double Sample Plan (Each Sample Size = 2)	Single Sample Plan (POD=1)	Single Sample Plan (POD = Cell C7)
20	Consumer Risk (prob. leak rate/yr/lot > target)			0.452%	0.449%	0.438%	0.308%	0.430%
21	Confidence (prob. leak rate/yr/lot < target)			99.548%	99.551%	99.562%	99.692%	99.570%
22	Mean Leak/yr/lot			2.25E-04	2.25E-04	2.25E-04	2.19E-04	2.24E-04
23	Variance (Leak/yr/lot)			3.31E-09	3.31E-09	3.30E-09	3.22E-09	3.30E-09
24	Prob. of Sampling 100% of Lot				3.30E-03	1.54E-02	2.87E-01	5.74E-02
25	Sum of Binomial Prob.		1.00000					
26								
27	Consumer Risk Table		SURRY			HHI-012A(BUTT WELD)		
28	A	B	C	D	H	L	P	T
29	No. of Flaws in Lot (k)	Implied Leak/yr/Lot	Binomial Probability of k Flaws	Probability of k or Less Flaws for the given Sample Plan				
30	0	0.00000	0.00000	0.00000	0.00000	0.00000	0.00000	0.00000
31	1	0.00002	0.00004	0.00004	0.00004	0.00004	0.00006	0.00004
32	2	0.00004	0.00030	0.00034	0.00034	0.00034	0.00045	0.00036
33	3	0.00006	0.00143	0.00177	0.00177	0.00180	0.00230	0.00185
34	4	0.00008	0.00504	0.00681	0.00683	0.00691	0.00863	0.00709
35	5	0.00010	0.01381	0.02063	0.02068	0.02090	0.02546	0.02136
36	6	0.00012	0.03060	0.05123	0.05136	0.05185	0.06161	0.05280
37	7	0.00014	0.05635	0.10758	0.10783	0.10875	0.12609	0.11038
38	8	0.00016	0.08795	0.19553	0.19593	0.19739	0.22349	0.19976
39	9	0.00019	0.11809	0.31361	0.31416	0.31614	0.34991	0.31910
40	10	0.00021	0.13794	0.45155	0.45220	0.45454	0.49249	0.45774
41	11	0.00023	0.14143	0.59297	0.59365	0.59605	0.63345	0.59910
42	12	0.00025	0.12817	0.72114	0.72176	0.72394	0.75647	0.72649

Table 3.7-2 (cont.)
EXAMPLE APPLICATION OF PERDUE MODEL TO A SURRY UNIT 1
HIGH HEAD INJECTION PIPING SEGMENT

	A	B	C	D	H	L	P	T
26								
27	Consumer Risk Table		SURRY			HHI-012A(BUTT WELD)		
43	No. of Flaws in Lot (k)	Implied Leak/yr/Lot	Binomial Probability of k Flaws	Pre-ISI (i.e., No ISI) Probability of k or Less Flaws	Double Sample Plan (Each Sample Size = 1) Prob. of k or Less Flaws	Double Sample Plan (Each Sample Size = 2) Prob. of k or Less Flaws	Single Sample Plan (POD=1) Prob. of k or Less Flaws	Single Sample Plan (POD = Cell C7) Prob. of k or Less Flaws
44	13	0.00027	0.10325	0.82440	0.82490	0.82665	0.85176	0.82854
45	14	0.00029	0.07427	0.89867	0.89903	0.90028	0.91756	0.90152
46	15	0.00031	0.04786	0.94653	0.94676	0.94756	0.95820	0.94829
47	16	0.00033	0.02771	0.97424	0.97438	0.97483	0.98071	0.97522
48	17	0.00035	0.01445	0.98869	0.98876	0.98899	0.99190	0.98918
49	18	0.00037	0.00679	0.99548	0.99551	0.99562	0.99692	0.99570
50	19	0.00039	0.00288	0.99836	0.99837	0.99841	0.99894	0.99844
51	20	0.00041	0.00110	0.99946	0.99946	0.99948	0.99967	0.99949
52	21	0.00043	0.00038	0.99984	0.99984	0.99984	0.99991	0.99985
53	22	0.00045	0.00012	0.99996	0.99996	0.99996	0.99998	0.99996
54	23	0.00047	0.00003	0.99999	0.99999	0.99999	0.99999	0.99999
55	24	0.00049	0.00001	1.00000	1.00000	1.00000	1.00000	1.00000
56	25	0.00052	0.00000	1.00000	1.00000	1.00000	1.00000	1.00000
57	26	0.00054	0.00000	1.00000	1.00000	1.00000	1.00000	1.00000
58	27	0.00056	0.00000	1.00000	1.00000	1.00000	1.00000	1.00000
59	28	0.00058	0.00000	1.00000	1.00000	1.00000	1.00000	1.00000
60	29	0.00060	0.00000	1.00000	1.00000	1.00000	1.00000	1.00000
61	30	0.00062	0.00000	1.00000	1.00000	1.00000	1.00000	1.00000
62	31	0.00064	0.00000	1.00000	1.00000	1.00000	1.00000	1.00000
63	32	0.00066	0.00000	1.00000	1.00000	1.00000	1.00000	1.00000
64	33	0.00068	0.00000	1.00000	1.00000	1.00000	1.00000	1.00000
65	34	0.00070	0.00000	1.00000	1.00000	1.00000	1.00000	1.00000
66	35	0.00072	0.00000	1.00000	1.00000	1.00000	1.00000	1.00000
67	36	0.00074	0.00000	1.00000	1.00000	1.00000	1.00000	1.00000
68	37	0.00076	0.00000	1.00000	1.00000	1.00000	1.00000	1.00000
69	38	0.00078	0.00000	1.00000	1.00000	1.00000	1.00000	1.00000
70	39	0.00080	0.00000	1.00000	1.00000	1.00000	1.00000	1.00000
71	40	0.00082	0.00000	1.00000	1.00000	1.00000	1.00000	1.00000
72	41	0.00085	0.00000	1.00000	1.00000	1.00000	1.00000	1.00000
73	42	0.00087	0.00000	1.00000	1.00000	1.00000	1.00000	1.00000
74	43	0.00089	0.00000	1.00000	1.00000	1.00000	1.00000	1.00000
75	44	0.00091	0.00000	1.00000	1.00000	1.00000	1.00000	1.00000
76	45	0.00093	0.00000	1.00000	1.00000	1.00000	1.00000	1.00000
77	46	0.00095	0.00000	1.00000	1.00000	1.00000	1.00000	1.00000
78	47	0.00097	0.00000	1.00000	1.00000	1.00000	1.00000	1.00000
79	48	0.00099	0.00000	1.00000	1.00000	1.00000	1.00000	1.00000
80	49	0.00101	0.00000	1.00000	1.00000	1.00000	1.00000	1.00000
81	50	0.00103	0.00000	1.00000	1.00000	1.00000	1.00000	1.00000
82	Col. Total		1.00000					

Table 3.7-3 shows a spectrum of statistical evaluations using the Perdue model for segments across several systems of interest for Surry Unit 1 to further illustrate the tool. Large diameter pipes and small diameter pipes are represented for a range of welds contained within those segments. Two low safety-significant segments, where examinations are currently required by ASME Section XI, are also included. These results show that high levels of confidence in meeting the respective target leak rates (see Table 3.7-1) can be achieved in these segments for both the Pre-ISI case and the double sample plan with a sample size of one and a conservative lower bound POD equal to 0.2. Given these results, no further examinations are required for the low safety significant segments. For each high safety-significant segment, one sample is chosen to provide additional assurance that the pressure boundary will be maintained even though the results show that no further examination is required in this highly reliable piping. The location to be examined in each segment is selected by the structural element subpanel using engineering and deterministic insights as discussed in the next section.

Limitations of the Statistical Model

Some limitations have been identified in the statistical model that is used in determining the minimum number of locations to be examined. These limitations have emerged primarily because it had been determined that the piping segments of interest are subject to conditions that may lead to a higher failure potential or importance than was intended for use in the Perdue Model. Also, some piping segments are subject to degradation mechanisms other than those associated with cracking. The Perdue Model should not be used in piping segments where the following conditions may occur:

- Accelerated cracking from high vibratory fatigue, stress-corrosion cracking or other potentially aggressive loading conditions or environments
- Degradation mechanisms associated with wastage, such as flow-assisted corrosion, erosion, or general corrosion
- For socket welds where neither surface nor volumetric examinations are possible
- Where corrective actions or mitigative repairs have been made, such as coatings programs or weld overlays, where the initial conditions of the piping have been altered.

Table 3.7-3
SURRY UNIT 1
SAMPLE RESULTS FROM PERDUE MODEL ANALYSIS

Segment	Nominal Pipe Size (inches)	Number of Welds	Probability of Flaw (a/t = 0.10) at 25 Years	Conditional Probability of Leak (per yr)	Pre-ISI Confidence (%)	Double Sample Plan Confidence (POD = 0.2) (%)	Number of Samples per Segment
ECC-3	6	6	5.38E-02	5.01E-06	100	100	1
ECC-4	6	138	4.99E-02	1.34E-07	100	100	0(1)
HHI-4C	3	9	3.08E-02	1.56E-06	100	100	1
HHI-9	2	82	2.87E-01	2.06E-05	99.99	99.99	1
HHI-12A	2	38	2.87E-01	2.06E-05	99.55	99.55	1
LHI-4	12	2	1.53E-02	6.42E-07	100	100	1
RC-7	36	10	7.66E-04	1.07E-06	99.24	99.24	0(1)
RC-16	6	7	5.38E-02	3.15E-07	100	100	1
RC-58	3	4	3.08E-02	3.40E-07	100	100	1

Note:

(1) Low safety significant segments. Results show high confidence with no subsequent inspections (Pre-ISI column).

For piping segments that have the potential for any of these conditions to occur, a defensible inservice inspection program for these piping segments should be developed based on deterministic information, engineering insights and experience, and industry best practices. Some general guidance for the above situation is provided at the end of Section 3.7.3, and specific examples from the Surry-1 application are provided in Section 3.7.5 for further clarification.

3.7.3 Selection of Actual Inspection Locations

Once the number of locations is determined, the engineering subpanel identifies the specific locations for examination. Figure 3.7-3 displays how this expertise and information is brought together in the structural element selection process.

Simplified P&IDs showing the segment boundaries are reviewed by the team along with piping isometrics, plant and industry operating experience, the previous piping segment evaluations performed to determine the high safety-significant piping segments and system design, fabrication and operating conditions. Based on the postulated failure mechanism and the loading conditions for the piping segment, the areas in which this failure mechanism is most likely to occur are identified considering the following factors:

Configuration Dependent. This factor considers the effect of piping layout and support arrangement. For example, piping with low flexibility for thermal expansion will experience high bending moments which, in turn, can drive crack growth.

Component Dependent. For example, socket welds have low resistance to sustained vibration. Elbows or piping immediately downstream of valves, which add turbulence to the flow, are locations susceptible to erosion-corrosion-wear.

Materials/Chemistry Dependent. Intergranular stress corrosion cracking (IGSCC) and dissimilar metal welds are examples of how materials and chemistry can play a role.

Loads Dependent. An example of this is the number of cycles seen by the piping segment. Another example is piping where inadvertent operation may lead to water hammer events. Seismic events are also included in this category.

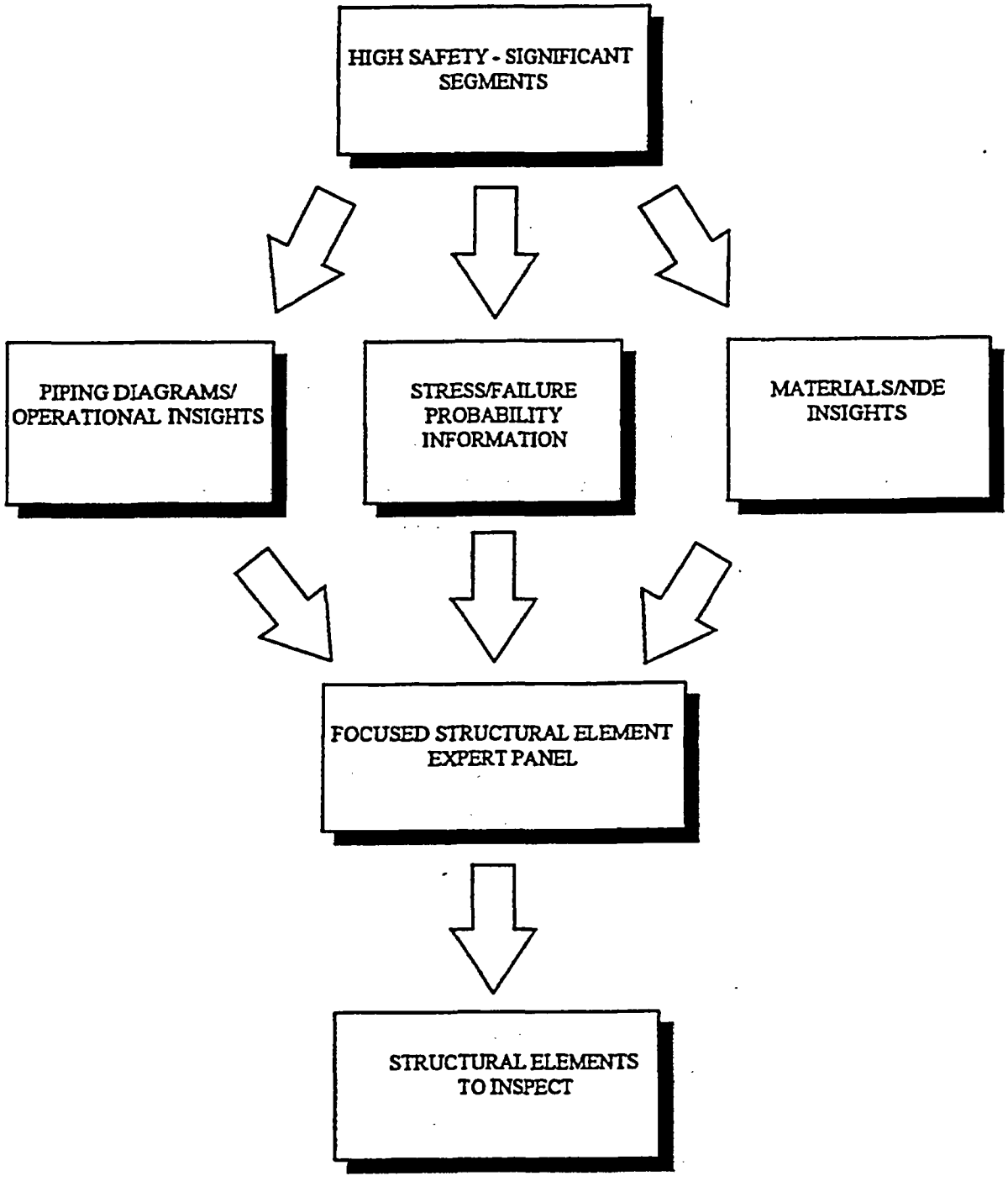

Figure 3.7-3 WOG Structural Element Selection Process

Determination of the inspection location(s) within a piping segment are dependent on these factors. In general,

- Component dependent failure modes are usually localized to a single or small number of locations.

- Materials dependent or operations dependent mechanisms are often present throughout the segment. In such cases, interactions with other effects must be considered for determining the location(s).

- Load dependent failure modes typically involve undetected preexisting flaws or degradation that could fail under high loads. The high loads could arise from dynamic (seismic, water hammer) events, large thermal expansion loads (configuration dependent), or external loading. Locations where such loads could have the greatest impact can often be determined.

Table 3.7-4 provides some additional insights based on postulated failure mechanism that assist in identifying the susceptible areas of piping.

For high safety-significant piping segments where the Perdue statistical model is not applied, the selection of an appropriate number of actual inspection locations will have to be determined using additional rationale beyond the guidance provided above.

- For piping segments subjected to aggressive degradation mechanisms, such as flow-assisted corrosion, that are already addressed in an augmented inspection program, it is recommended that a determination of any potential secondary degradation mechanisms (e.g., thermal fatigue) be made. If it is determined that a secondary mechanism may be of concern, then the examination of at least one location in the segment may be warranted and included in the RI-ISI program. This additional examination(s) beyond the current augmented program should also be considered if the delta risk of RI-ISI versus ASME Section XI ISI is enhanced.

Table 3.7-4 INSIGHTS FOR IDENTIFYING INSPECTION LOCATIONS		
Failure Mechanism	**General Criteria**	**Susceptible Areas**
Thermal Fatigue	Areas where hot and cold fluid mix, areas of rapid cold or hot water injection, areas of potential leakage past valves separating hot and cold water	Nozzles, branch pipe connections, safe ends, welds, heat-affected zones, base metal, areas of concentrated stress
Corrosion Cracking	Areas exposed to contamination and areas with crevices; high stresses (residual, steady-state, pressure), sensitized material (304 SS) and high coolant conductivity are all required; lack of stress relief or cold springing could also lead to residual stresses	Base metal, welds, and heat-affected zones
Microbiologically influenced corrosion	Areas exposed to organic material or untreated water	Fittings, welds, heat-affected zones, crevices
Vibratory Fatigue	Configurations susceptible to flow induced vibration and flow striping or for vibratory resonance with rotating equipment (pump) frequencies	Welds, branch pipe connections
Stress Corrosion Cracking	Areas of high oxygen and stagnant flow	Austenitic steel welds and heat-affected zones
Flow accelerated corrosion	Areas of low chromium material content, high moisture content, and high pH, high pressure drop or turning losses	
Low cycle fatigue	Areas with high loads due to thermal expansion for heat-up and cool-down thermal cycling.	Equipment nozzles and other anchor points, near snubbers, dissimilar metal joints

- For piping that is highly reliable, but the materials or prior corrective actions negate the applicability of a statistical evaluation, a minimum of one examination location per segment should be performed.

- A segment that is entirely comprised of socket welds and subject to vibration may be appropriately examined using a VT-2 exam that inspects the entire segment for leakage at pressure. Therefore, a minimum number of specific examination locations is not required.

Other situations may exist that warrant considerations beyond the above guidance. However, the engineering subpanel who is selecting the actual inspection locations is always responsible for defending and documenting their rationale for this effort.

Once the initial set of inspection locations is identified, the examinations are performed.

3.7.4 Millstone Unit 3 Examples[1]

Only one segment, ECCS-0, is considered to be high-safety-significant in the emergency core cooling system. The selection of this segment is primarily based on the consequence of failure because the selected element SRRA failure probability was less than 1.0E-08. The subpanel reviewed the structural elements within the segment and concurred that the element location that was selected is considered to have the highest failure potential. The location of concern is the base metal of a 24" pipe at ground surface that may be subjected to cracking because of outside diameter corrosion and external loads. Since the area being examined at this selected element location is base material; not currently addressed in ASME Section XI, Figure 3.7-4 has been developed to identify the area to be inspected by VT-2 and eddy current examination.

QSS-2 is the only segment that is considered to be high-safety-significant in the quench spray system. The selection of this segment is primarily based on consequence of failure. However, the failure probabilities in this segment were based on prior SRRA evaluations of two locations, both of which are less than 1.0E-8. The subpanel reviewed all the elements in the segment and

[1] The Perdue model was unavailable at the time of the Millstone 3 reference plant application. However, these examples highlight how engineering insights are used in selecting actual inspection locations by the engineering subpanel.

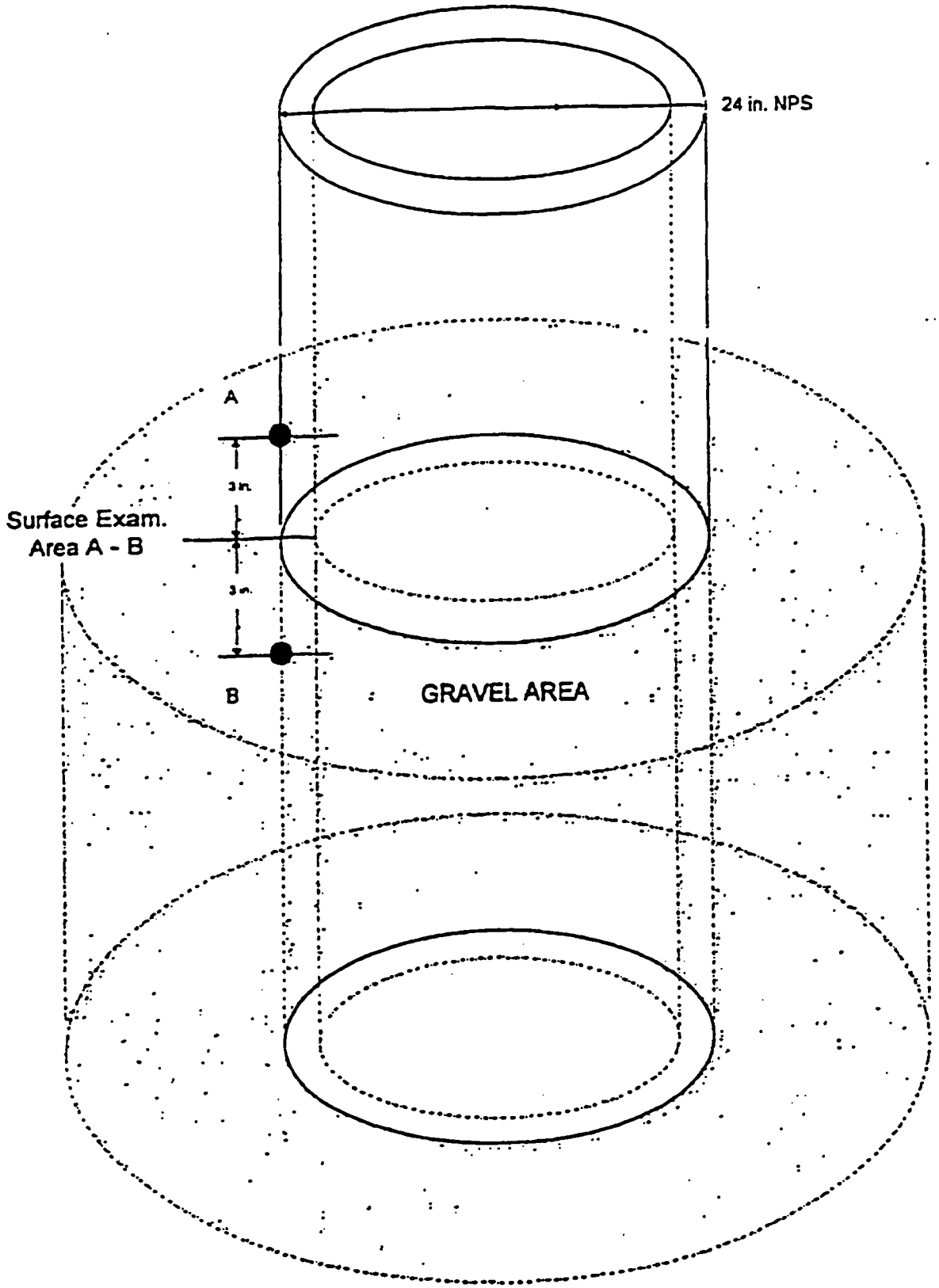

Figure 3.7-4 Millstone Unit 3 Base Metal Examination Location for ECCS-0

concurred that the two selected locations have the highest failure potential. Both locations are pipe-to-elbow welds in the 12" pipe that may be subjected to cracking from vibrational fatigue caused by pump operation. Both UT and VT-2 examinations are recommended for these two locations.

For FWA, five segments were considered to be high safety-significant in this system plus 4 feedwater pipe/elbow to nozzle welds included for plant reliability considerations. The selection of these segments was primarily based on consequence of failure, because the selected element failure probabilities were less than 1.0E-08. The subpanel reviewed all the segment elements and concurred that the element locations selected were considered to have the highest failure probabilities. For the first high safety-significant segment FWA-7, the element location selected was near the turbine driven auxiliary feed pump. The panel agreed that this location on the 2 side of the reducer would act as a sentinel for any vibration related fatigue problems and that the previously specified RT examination should be performed following pump test or system operation. For the remaining 4 high safety-significant segments FWA-12, -14, -16, and -18, a MT examination was added to the specified RT examination because the failure mode was identified to be external loads. Since external loads is a possible combination of several contributors to potential failure and not one single degradation mechanism, the subpanel believed that OD flaws should be examined for at these locations and this was the reason that the MT examination was added. The 4 steam generator inlet feedwater nozzle welds had been included due to plant reliability considerations because of thermal fatigue induced cracking that had been found throughout the industry and at MP3. MP3's nozzles were repaired and modified in 1993 to reduce the potential for fatigue cracking. To monitor the effectiveness of the modifications RT examination of the 2 elbow to nozzle welds and UT examination of the 2 pipe to nozzle welds including additional base material was specified by the subpanel.

Five segments were also considered to be high safety-significant in the SIL system. The selection of these segments was primarily based on consequence of failure, because the selected element failure probabilities were less than 1.0E-08. The subpanel reviewed the element/location selections for each of the selected segments and several changes were made. These changes were based on a detailed review of the piping configurations and fabrication drawings. For SIL-3 a pipe to elbow weld had originally been selected and it was changed to address a unique discontinuity in this piping segment. The subpanel review identified a pipe

transition piece welded to a valve where a pipe class change occurred. This pipe class change or thickness change was believed to have a higher potential for failure than the originally selected element location. The subpanel specified that a RT examination method be used at this location so that the area of the valve counterbore region could be examined along with the transition piece to pipe weld. For SIL-5, welds on both sides of a reducer were originally specified for examination. The subpanel decided that after review of these locations that only the 6 side of the reducer needed to be examined. The subpanel believed that since the failure probabilities at these locations were relatively low, less than 1.0E-08, examining both locations was not necessary. The subpanel decided to focus the examination on the higher stressed 6 side of the reducer in order to address the potential thermal fatigue failure mode at this location. Additionally, the weld volume was extended to include 1 of base material adjacent to the weld.

3.7.5 Surry Unit 1 Examples

The Surry expert panel directed the subpanel to select the necessary locations on the high safety-significant segments and some low safety-significant segments for examination, and to determine the appropriate examination methods and extent of examination. The number of locations selected were determined by the perceived failure mechanism importance, the statistical sampling requirements, and the risk change. The subpanel used the following criteria in the selection process.

- Select the locations (100%) where a perceived high failure importance is recognized. These locations generally have an active failure mechanism recognized with a corresponding high failure probability. In some cases where an augmented program was already established, this was maintained. The subpanel in some cases required additions to the augmented inspection programs.

- Select locations as necessary to meet the statistical sampling requirements and change in risk requirements. The subpanel generally examined locations thought to have high loadings, and would generally, in similar multiple loops, spread the examinations in different locations. Additional rationale must be developed when the statistical model cannot be applied to determine the minimum number of examination locations for a given segment.

- The examination requirements and extent of examination followed the guidance found in Table 4.1-1, which is provided later in this report. In some instances, the subpanel required more than what the guidance indicates. Areas of concern associated with socket welds or materials not inspectable by normal NDE methods required departure from the guidance.

Several examples are provided below where additional rationale had to be applied when the Perdue statistical model could not be exercised and when the NDE methods required departure from the guidance in Table 4.1-1.

Segment FW-002 is a non-Code class piping component in the normal feedwater system. The segment is already inspected by the station's augmented erosion/corrosion inspection program (susceptible to that failure mechanism). This program will be maintained on the segment. The subpanel additionally selected a weld for ultrasonic (volumetric) and magnetic particle (surface) examination at a perceived high stress location. The examination would address the secondary failure mechanism of fatigue. This additional sample examination provided additional inspection coverage for risk considerations. Note that the subpanel required a magnetic particle examination. The magnetic particle examination is not a requirement of the guidance in Table 4.1-1 (R1.11). The subpanel wanted to ensure against outside diameter initiating flaws.

Segments CH-008, 009, and 0010, part of the charging system, are small bore, socket welded piping segments which supply seal injection water to the reactor coolant pump seals. The predicted failure mechanism is high cycle fatigue due to pump vibration. The examination technique required by Table 4.1-1 (R1.12) is a VT-2 exam at each refueling outage. Since the VT-2 exam involves inspection of the whole segment for leakage at pressure, tabulation of the exact number of welds per segment and application of the Perdue Model was not deemed necessary. This would be the case for any segment where VT-2 is the appropriate inspection technique. Additional NDE is also directed to this segment by the engineering subpanel that is over and above the guidance in Table 4.1-1.

Service water segments SW-044, 045, 046, 047, and 054 are fabricated of copper/nickel material which is not a material which can be modeled by the SRRA code and statistical model used for

Surry Unit 1. They conduct service water to and from the charging pump intermediate seal coolers. The segments were originally ranked to be low safety significant but were moved up to high by the Expert Panel because of its sensitivity to the possibility of indirect effects. Because the piping is considered highly reliable, the postulated failure mechanism is thermal fatigue by default (actually thermal cycles are practically nonexistent), and the SRRA code could not be used to calculate a failure probability, which is a necessary input to the Perdue Model, the Perdue Model was not used to select examination locations. The subpanel believed that an examination location per segment would be representative of the balance of these highly reliable, low safety significant segments.

Finally, segments RC-041, 042, 043 are Class 1 piping components in the reactor coolant system. The segments provide safety injection water to the three reactor coolant loops when necessary. These segments were identified as being susceptible to thermal striping. The industry has experienced an issue when high pressure and cooler charging water has leaked into the warmer RCS at these locations. The subpanel directed a 100% inspection for this potentially active failure mechanism at the weld connecting the inlet check valve to the reactor coolant piping on all three segments. The statistical model required that one more location be examined on each segment. As the segments were similar in design and function, the subpanel identified welds to be examined at different locations on the three segments. The subpanel required that all selected locations receive an ultrasonic (volumetric) and liquid penetrant (surface) examination, again more than the guidance's requirements.

SECTION 4
INSPECTION PROGRAM REQUIREMENTS

This section contains the minimum Risk-Informed Inservice Inspection (RI-ISI) program requirements for High Safety-Significant (HSS) and Low Safety-Significant (LSS) piping structural elements determined in accordance with the requirements of Section 3.7. Requirements for Nondestructive Examination (NDE), System Pressure Tests, Scheduling, Implementation, Program Monitoring, and Corrective Action Program descriptions are included. Inservice examinations and system pressure tests are to be performed in accordance with this section and the requirements contained in the American Society of Mechanical Engineers (ASME) Boiler & Pressure Vessel Code, Section XI, Edition and Addenda specified in an Owner's current Inservice Inspection Program except where specific references are provided that add supplemental requirements, specify other Code Editions and Addenda, or recommend/require the use of ASME Code Cases.

Examinations and system pressure tests may be performed during either system operation or plant outages, such as refueling outages or maintenance outages. Scheduled examinations are to be completed during each inspection interval. Currently the interval is 10 years. Examinations are distributed across periods such that one third of the examinations are conducted in each period. Alternative examination methods, a combination of methods, or newly developed techniques may be used in lieu of the NDE requirements of Table 4.1-1, as provided in IWA-2240 Alternative Examinations of ASME Section XI.

Experience has shown that when an aggressive mechanism (such as IGSCC, thermal striping, and flow-accelerated corrosion) is discovered, corrective actions and augmented programs are implemented to address the concern. Augmented inspection programs for these situations tend to have intervals less than 10 years.

Through the RI-ISI process, situations may be identified on a plant-specific basis where an aggressive mechanism may potentially occur (e.g., back-leakage of hot water across a check valve into a piping segment containing cooler water, thereby inducing the potential for thermal striping). For these situations, the licensee may choose to either implement examinations more frequently than every 10 years (including the use of thermal monitors) or implement changes to

minimize the potential for the identified phenomenon. If the licensee chooses to implement a program that will provide vital information more frequently than every 10 years, then that new information would have to be evaluated at the time that is obtained to determine if a change to the prior RI-ISI results is necessary.

Comparison of results to current ASME Section XI locations are provided with a cost benefit update that now includes the pilot plant work at Surry Unit No. 1.

Examinations Requirements

An attempt should be made to provide a minimum of > 90% coverage criteria (per ASME Code Case N-460) when performing an exam. Volumetrically this is done using ultrasonic (UT) techniques with the >90% requirement being met in all Code required directions (averaged). The examination is considered complete if the >90% coverage is obtained using the specified technique in the plan or combinations of techniques if limitations are encountered. Some limitations will not be known until the examination is performed, since some locations will be examined for the first time by the specified techniques.

When an examination location is selected that does not meet >90% examination coverage, a strategy should to be applied with regard to examination coverage as follows:

1. If >90% coverage is not obtained, the coverage obtained should be documented as well as the reason for the coverage limitation. If the coverage is limited by an obstruction, which is removable, then an evaluation should be performed to either allow removal of the obstruction or justify why the obstruction cannot be removed.

2. If the obstruction is required to remain, then consideration should be given to the structural elements on either side of the selected structural element, which is limited. If either of these structural elements can be examined to the coverage requirements, then an examination should be performed there in addition to the limited coverage exam already performed. This may be the only examination performed in situations where the selected element was selected for statistical sampling alone. Selecting another location would meet the statistical

requirements for the segment, and the original site does not need to be examined. Additionally, the substitution (statistical) would not necessarily be limited to the elements on either side of the element originally selected.

3. If the area or volume of concern still remains insufficiently addressed, consideration should be given to leakage monitoring options such as more frequent pressure testing and VT-2 examinations or operator walkdowns.

4. The coverage obtained, limitations encountered, alternative provisions, and an assessment of how the risk is being addressed should be documented. The information should be formally submitted as a relief request.

It should be noted though that if a current ASME Section XI examination is a partial examination and it continues to be a partial examination in the RI-ISI process, the amount of risk addressed by examination remains the same for that location. If a new location is going to be examined by RI-ISI and it is a partial examination, but it was not previously required to be examined by Section XI, then the new examination would still increase the amount of risk addressed by examination for that location. It is not necessarily true that because you reduce examination totals, that a complete examination must be performed at the RI-ISI selected locations to maintain risk neutrality or improvement in the program. The impact of locations being removed on the overall risk contribution should be assessed (i.e., usually the segment risk contribution is negligible) in an analysis. Additionally the sampling requirements necessary to maintain assurance of structural integrity should be accounted for in the analysis. These type evaluations should be included in how the risk is being addressed in a partial examination situation.

4.1 HIGH SAFETY-SIGNIFICANT LOCATIONS

HSS piping structural elements should be examined in accordance with the requirements of Table 4.1-1 for the areas and/or volumes of concern at each HSS location. The requirements contained in Table 4.1-1 have been taken directly out of ASME Code Case N-577 Risk-Informed Requirements for Class 1, 2, and 3 Piping - Method A Section XI, Division 1. The NDE method for each HSS location is based on the postulated failure modes and the configuration of each piping structural element as described in Table 4.1-1. As an alternative to the requirements in

Table 4.1-1, additional guidance for visual examination methods, examination monitoring techniques, and NDE methods associated with postulated failure modes is provided in Table 4.1-2. This guidance may be used subject to approval by an Authorized Nuclear Inservice Inspector (ANII) under the requirements of Section XI, IWA-2240. All ASME Code Class 1, 2, and 3 HSS locations should continue to receive a visual examination for leakage in accordance with the system pressure test requirements of ASME Section XI.

4.2 LOW SAFETY-SIGNIFICANT LOCATIONS

LSS piping structural elements do not require NDE under a RI-ISI program. When a location is determined to be LSS, it usually has no appreciable consequence or failure importance and thus is assigned a low level examination requirement. This low level requirement consists of a visual examination for leakage that may be conducted during operational walkdowns or in conjunction with system pressure tests performed in accordance with ASME Section XI. LSS locations that are determined to have a high failure importance and a low consequence are usually examined by other Owner controlled programs for the failure mechanism of concern such as Flow Accelerated Corrosion (FAC). These Owner controlled programs shall continue to be implemented based on their own requirements.

4.3 SYSTEM PRESSURE TESTS

System pressure test requirements and VT-2 visual examinations shall continue to be performed on all ASME Code Class 1, 2, and 3 systems regardless of whether the segments contain locations that have been determined to be HSS or LSS. It is recommended that each Owner consider the use of ASME Code Cases N-498-1 Alternative Rules for 10-Year System Hydrostatic Testing for Class 1, 2, and 3 Systems Section XI, Division 1 and N-416-1 Alternative Pressure Test Requirement for Welded Repairs or Installation of Replacement Items by Welding, Class 1, 2, and 3 Section XI, Division 1 to eliminate the need to perform elevated system pressure tests. Use of a RI-ISI program does not require elevated system pressure tests as currently required by ASME Section XI. Use of these ASME Code Cases has been approved by the Nuclear Regulatory Commission (NRC) for many Owners. Both Code Cases are presently being evaluated for industry acceptance by the NRC in Draft Regulatory Guide 1050

Table 4.1-1 EXAMINATION CATEGORY R-A, RISK-INFORMED PIPING EXAMINATIONS							
Item No.	Parts Examined	Examination Requirement/ Fig. No.[2,10]	Examination Method	Acceptance Standard[10]	Extent[3] and Frequency		Deferral of Examination to End of Interval
					1st Interval	Successive[5] Intervals	
R1.10	High Safety-Significant Piping Structural Elements						
R1.11	Elements Subject to Thermal Fatigue	IWB-2500-8(c)[1] IWB-2500-9,10,11 IWC-2500-7(a)[1]	Volumetric	IWB-3514	Element[2,4]	Same as 1st	Not Permissible
R1.12	Elements Subject to High Cycle Mechanical Fatigue	IWB-2500-8(c)[1] IWB-2500-9,10,11 IWC-2500-7(a)[1]	Visual, VT-2[11]	IWB-3142	Each Refueling	Same as 1st	Not Permissible
R1.13	Elements Subject to Corrosive, Erosive, or Cavitation Wastage	Note 8	Volumetric[8] (for Internal Wastage) or Surface (for External Wastage)	IWB-3514 Note 8	Element[2] Element[2]	Same as 1st	Not Permissible
R1.14	Elements Subject to Crevice Corrosion Cracking	Note 7	Volumetric	IWB-3514	Element[2]	Same as 1st	Not Permissible
R1.15	Elements Subject to Primary Water Stress Corrosion Cracking (PWSCC)[6]	Note 7	Visual, VT-2[11]	IWB-3142	Each Refueling	Same as 1st	Not Permissible
R1.16	Elements Subject to Intergranular Stress Corrosion Cracking (IGSCC)	IWB-2500-8(c) IWB-2500-9,10,11	Volumetric	IWB-3514	Element[2]	Same as 1st	Not Permissible
R1.17	Elements Subject to Microbiologically Influenced Corrosion (MIC)	IWB-2500-8(c) IWB-2500-9,10,11	Visual, VT-3 Internal Surfaces or Volumetric[8]	Note 8	Element[2]	Same as 1st	Not Permissible
R1.18	Elements Subject to Flow Accelerated Corrosion (FAC)	Note 9	Note 9	Note 9	Note 9	Note 9	Note 9

Table 4.1-1 (cont.)
EXAMINATION CATEGORY R-A, RISK-INFORMED PIPING EXAMINATIONS

Notes:

(1) The length for the examination volume shall be increased to include 1/2 in. beyond each side of the base metal thickness transition or counterbore.

(2) Includes all examination locations identified in accordance with the risk-informed selection process in Section 3.7.

(3) Includes 100% of the examination location. When the required examination volume or area cannot be examined due to interference by another component or part geometry, limited examinations shall be evaluated by the Expert Panel for acceptability. Areas with acceptable limited examinations, and their bases, shall be documented.

(4) The examination shall include any longitudinal welds at the location selected for examination in Note 2. The longitudinal weld examination requirements shall be met for both transverse and parallel flaws examination volume defined in Note 2.

(5) Initially-selected examination locations are to be examined in the same sequence during successive inspection intervals, to the extent practical.

(6) Applies to mill annealed Alloy 600 nozzle welds and heat affected zone (HAZ) without stress relief.

(7) The examination volume shall include the volume surrounding the weld, weld heat affected zone, and base metal, where applicable, in the crevice region. Examination should focus on detection of cracks initiating and propagating from the inner surface.

(8) The examination volume shall include base metal, welds and weld HAZ in the affected regions of carbon and low alloy steel, and the welds and weld HAZ of austenitic steel. Examinations shall verify the minimum wall thickness required. Acceptance criteria for localized thinning is in course of preparation. The examination method and examination region shall be sufficient to characterize the extent of the element degradation.

(9) In accordance with the Owner's existing FAC program.

(10) Paragraph and Figure numbers refer to the 1989 Edition.

(11) VT-2 examinations may be conducted during a system pressure test or a pressure test specific to that component/element.

Table 4.1-2 GUIDANCE FOR VISUAL EXAMINATION METHODS, EXAMINATION MONITORING TECHNIQUES, AND NDE METHODS ASSOCIATED WITH POSTULATED FAILURE MODES		
Potential Piping Inside Surface Initiated Flaws or Relevant Conditions (1)		
Piping Structural Elements	**Postulated Failure Modes**	**Suggested Visual Exam Method, Monitoring Technique, or NDE Method**
Butt Welds (2) *≥ .237 in. Nominal Wall Thickness for Piping ≥ NPS 2*	Cracking *Thermal Fatigue, Mechanical Fatigue, or Corrosion*	Ultrasonic Examination (3) or Continuous Temperature and/or Stress Monitoring *For Thermal Fatigue*
Butt Welds (2) *< .237 in. Nominal Wall Thickness*	Cracking *Thermal Fatigue, Mechanical Fatigue, or Corrosion*	Radiographic Examination (4) or Continuous Temperature and/or Stress Monitoring *For Thermal Fatigue*
Butt Welds (2) *Essentially Limited to RAW Water Cooling Systems*	FAC *Microbiologically Influenced Corrosion, Heat Affected Zone Washout, and General Erosion*	Combinations of Ultrasonic Examination (5), and Radiographic Examination (4)
Branch Connection Welds *Branch Pipe ≤ NPS 2 Connected to Main Run Pipe ≤ NPS 4*	Cracking *Thermal Fatigue, Mechanical Fatigue, Corrosion, or Vibrational Fatigue (6)*	Radiographic Examination (4) or Continuous Temperature and/or Stress Monitoring *For Thermal Fatigue*
Branch Connection Welds *Branch Pipe > NPS 2 Connected to ≥ .237 in. Nominal Wall Thickness Main Run Pipe > NPS 4*	Cracking *Thermal Fatigue Mechanical Fatigue, Corrosion, or Vibrational Fatigue (6)*	Ultrasonic Examination (3) *Main Run Pipe Base Material Adjacent to The Weld* and Radiographic Examination (4) *Weld and Branch Fitting Base Material Adjacent to The Weld to The Extent Possible* or Continuous Temperature and/or Stress Monitoring *For Thermal Fatigue*
Socket Welds *≥.237 in. Nominal Wall Thickness*	Cracking *Thermal Fatigue Mechanical Fatigue, Corrosion, or Vibrational Fatigue (6)* FAC *General Wastage from Flow or Oxidation*	Radiographic Examination (4) Supplemented By Ultrasonic Examination (3) *Pipe Base Material Adjacent to The Weld* or Continuous Temperature and/or Stress Monitoring *For Thermal Fatigue*

Table 4.1-2 (cont.) GUIDANCE FOR VISUAL EXAMINATION METHODS, EXAMINATION MONITORING TECHNIQUES, AND NDE METHODS ASSOCIATED WITH POSTULATED FAILURE MODES		
Potential Piping Inside Surface Initiated Flaws or Relevant Conditions (1)		
Piping Structural Elements	**Postulated Failure Modes**	**Suggested Visual Exam Method, Monitoring Technique, or NDE Method**
Socket Welds *< .237 in. Nominal Wall Thickness*	Cracking *Thermal Fatigue* *Mechanical Fatigue,* *Corrosion, or* *Vibrational Fatigue (6)* FAC *General Wastage from Flow or Oxidation*	Radiographic Examination (4) or Continuous Temperature and/or Stress Monitoring *For Thermal Fatigue*
Pipe Runs or Areas *Base Material and Welds*	FAC *General Wastage from Flow or Oxidation*	Ultrasonic Examination (5), Radiographic Examination (4), or Infra-Red Thermography (7)
Pipe Fittings *Such as Elbows, Tees, Reducers, or Expanders*	FAC *General Wastage from Flow or Oxidation*	Ultrasonic Examination (5), Radiographic Examination (4), or Infra-Red Thermography (7)
Potential Piping Outside Surface Initiated Flaws or Relevant Conditions		
All Piping Structural Elements *Such as Butt Welds, Branch Connection Welds, Socket Welds, Pipe Runs, or Pipe Fittings*	Cracking *Thermal Fatigue* *Mechanical Fatigue,* *Corrosion, or* *Vibrational Fatigue (6)*	Liquid Penetrant Examination or Eddy Current Examination *For Austenitic Stainless Steels, Non-Ferritic High Alloy Materials, and Dissimilar Metal Welds* or Magnetic Particle Examination or Eddy Current Examination *For Carbon Steel, Ferritic Low Alloy Steel Materials and Welds*
All Piping Structural Elements *Such as Butt Welds, Branch Connection Welds, Socket Welds, Pipe Runs, or Pipe Fittings*	Corrosion *General Wastage from Oxidation*	Visual, VT-3 Examination (8)

Table 4.1-2 (cont.)
GUIDANCE FOR VISUAL EXAMINATION METHODS, EXAMINATION MONITORING TECHNIQUES, AND NDE METHODS ASSOCIATED WITH POSTULATED FAILURE MODES

Notes:

(1) Inside surface examinations of piping structural elements subject to cracking may be performed if they become accessible in lieu of the suggested volumetric examinations of this table. Examination methods such as liquid penetrant examination, eddy current examination, or magnetic particle examination for appropriate materials may be used. For piping structural elements subject to FAC, a general VT-3 visual examination may be performed from the inside surface of the piping, but it may necessary to supplement this general visual examination with other examination methods to determine the extent of the erosion or corrosion.

(2) Butt welds include circumferential welds and longitudinal welds. The examination methods suggested for these welds include methods for welds of all materials, dissimilar metal welds, or portions thereof except for those welds that are made from austenitic cast stainless steel materials. Radiographic examination should be used for welds that include austenitic cast stainless steel materials.

(3) An ultrasonic angle beam examination sensitive to flaws initiating at the inside diameter surface of a weld or heat affected zone should be used.

(4) Radiographic examination is a sensitive examination for identifying flaws parallel to the radiation beam used in the technique. The method is good for the detection of pits, slag, and thermal fatigue cracks. Intergranular stress corrosion cracking, stress corrosion cracking, and off angle cracks are not reliably detected with this method. This examination method provides an accurate plan view for the location of flaws that it can detect and is extremely helpful used in conjunction with ultrasonic examination to evaluate localized areas of pitting, flow erosion, or microbiologically influenced corrosion attacks.

(5) An ultrasonic straight beam examination is used here for accurate measurements of material thickness. This method to used to assess erosion/corrosion material loss.

(6) Cracking resulting from vibrational fatigue is not usually detectable by NDE methods prior to leaking. Guidance for assessment of vibrational fatigue conditions may be found in Part 3 of the ASME OM-S/G-1990 GUIDE.

(7) Infra-red thermography may be a useful examination method for overall erosion/corrosion assessments to locate general areas of wall loss in steam or hot fluid systems. This method should be combined with ultrasonic examination or radiographic examination for accurate wall loss measurements.

(8) This general VT-3 visual examination method is good for location of general wastage from oxidation, but if severe oxidation is identified other examination methods may have to be used to quantify the amount of material loss.

which will be Revision 12 to U.S. NRC Regulatory Guide 1.147. Non-Code Class system examination requirements for HSS or LSS locations shall include those system pressure tests and corresponding visual examinations for leakage that are required under an Owner's Current Licensing Basis (CLB) as defined in 10 CFR 54.3. Generally, Non-Code Class systems do not require inservice type system pressure tests.

4.4 COMPARISON OF RESULTS TO CURRENT ASME XI INSPECTION LOCATIONS

This section discusses the comparison of the results of the risk-informed process to the current ASME Section XI piping inspection locations.

4.4.1 Comparison of Examination Locations

Millstone 3 Comparison

Table 4.4-1 provides a comparison of the structural element/location selections by system for the representative WOG plant. The risk-informed ISI program results are compared against the existing ISI program weld selections based on the 1989 Edition of the ASME Code Section XI requirements.

The first column of the table represents the systems that were evaluated under the risk-informed ISI program. This list is also shown in Table 3.2-1 and includes all the ASME Code Class 1, 2, and 3 piping systems of the existing ISI program, piping systems modeled in the PSA, and various balance of plant (non-nuclear Code Class) systems.

The second column of the table identifies the piping segments determined to be high safety-significant by the expert panel previously shown in Table 3.6-13. These high safety-significant piping segments include all the piping structural elements that were evaluated for inclusion in the risk-informed ISI program by the expert panel.

The third column divides the number of the structural elements selected for examination by the expert panel into each of the applicable ASME Code Classifications for each system. This column shows the number of elements that were selected for examination in accordance with the risk-informed ISI program within the ASME Code Class 1, 2, and 3 piping systems, and no exemptions were applied from IWB-1220, IWC-1220, or IWD-1220 of Section XI.

Table 4.4-1
MILLSTONE UNIT 3 PRELIMINARY STRUCTURAL ELEMENT SELECTION
RESULTS AND COMPARISON TO ASME SECTION XI 1989
EDITION REQUIREMENTS

Systems Evaluated	High Safety-Significant Segments	Risk-Informed ISI Program High Safety-Significant Structural Elements			ASME Section XI ISI Program 1989 Edition Examination Category Weld Selections			
		CLASS 1	CLASS 2	CLASS 3	B-F	B-J	C-F-1	C-F-2
BDG (SG Blowdown)	0	-	-	-	-	-	-	-
CCE (CHS Cool)	0	-	-	-	-	-	-	-
CCI (SI Cool)	with SIH	-	-	-	-	-	-	-
CCP (CCW)	4	0	0	5	0	0	0	0
CHS (CVCS)	4	0	6	0	0	9	10	0
CNM (Condensate)	with FWS	-	-	-	-	-	-	-
DTM (Turbine Plant Drains)	with MSS	-	-	-	-	-	-	-
ECCS (1)	1	0	1	0	0	0	0	0
EGF (DG Fuel)	0	-	-	-	-	-	-	-
FWA (Aux Feed)	5	0	8 (2)	1	0	0	0	3
FWS (Feedwater)	0	0	0	0	0	0	0	41
HVK (Control Bld Chill)	0	-	-	-	-	-	-	-
MSS (Main Steam)	0	0	0	0	0	0	0	32
QSS (Quench spray)	1	0	2	0	0	0	64	0

Table 4.4-1 (cont.) MILLSTONE UNIT 3 PRELIMINARY STRUCTURAL ELEMENT SELECTION RESULTS AND COMPARISON TO ASME SECTION XI 1989 EDITION REQUIREMENTS								
Systems Evaluated	High Safety-Significant Segments	Risk-Informed ISI Program High Safety-Significant Structural Elements			ASME Section XI ISI Program 1989 Edition Examination Category Weld Selections			
		CLASS 1	CLASS 2	CLASS 3	B-F	B-J	C-F-1	C-F-2
RCS	55	67(3)	0	0	22	318	0	0
RHS (RHR)	with SIL	-	-	-	-	-	-	-
RSS (Recirc)	1	0	1	0	0	0	23	0
SFC (Fuel Pool)	0	-	-	-	-	-	-	-
SIH (HPI)	4	0	4	0	0	57	28	0
SIL (LPI)	5	0	6	0	0	40	106	0
SWP (SW)	16	0	0	18(3)	0	0	0	0
TOTAL (4)	96	67	28	24	22	424	231	76

Notes:

(1) Section XI weld selections are included in the SIH and SIL systems.

(2) Includes 4 Feedwater Pipe to Nozzle welds that were not determined to be High Safety-Significant.

(3) Eight RCS and 4 Service Water High Safety-Significant elements/segments will require VT-2 exams only.

(4) Total RI-ISI Elements Requiring NDE = 107 Total Section XI Welds = 753 86% REDUCTION

No element selections were determined to be applicable outside the existing ASME Code Class boundaries at Millstone Unit 3, but this may not be the case at all plants that apply this process. Section XI currently addresses only weld selections, and under a risk-informed ISI program, this may not always be the case. Since the process identifies the segments of piping that are high safety-significant in relation to their possible failure affecting core damage, the use of existing Section XI exemptions and examination criteria has been shown at Millstone Unit 3 not to be appropriate. Additionally, the following specific information about some of these element selections is provided to show that, under a risk-informed ISI program, the current Section XI requirements may not be applicable to the elements selected for examination:

- for the Chemical and Volume Control System (CHS), six Class 2 elements are shown to have been selected for examination under the risk-informed ISI program. Of these six elements, five are currently exempt from NDE by Section XI because of their pipe sizes under IWC-1220;

- the element selected for examination under the Class 2 column of the Emergency Core Cooling System (ECCS), is not a weld location, but is limited to base metal and is identified in Figure 3.7-4;

- in the Auxiliary Feedwater System (FWA), the Class 3 element that was selected for examination is located on a line that is currently exempt from NDE by pipe size under IWD-1220;

- in the Low Pressure Safety Injection System (SIL), one of the six Class 2 elements selected for examination is also exempt from NDE by pipe size under IWC-1220; and

- for the Service Water System (SWP), selected Class 3 elements, two of the 18 selected are also exempt from NDE by pipe size under IWD-1220.

The fourth column shows the current weld selections under the requirements of the existing Millstone Unit 3 ISI program for Class 1 and 2 piping. These selections are determined under the requirements of Table IWB-2500-1 for Class 1 piping, Examination Categories B-F Pressure Retaining Dissimilar Metal Welds and B-J Pressure Retaining Welds in Piping; and Table IWC-2500-1 for Class 2 piping, Examination Categories C-F-1 Pressure Retaining Welds in

Austenitic Stainless Steel or High Alloy Piping and C-F-2 Pressure Retaining Welds in Carbon or Low Alloy Steel Piping. For Class 3 piping, there are no current requirements to examine welds, but the piping itself receives system pressure tests. For purposes of identifying Class 3 piping subject to examination, the rules of Table IWD-2500-1, Examination Category D-A under the 1992 Edition of ASME Section XI, have been used.

Table 4.4-1 shows that 119 elements were selected for some type of examination under the Millstone Unit 3 risk-informed ISI program. 107 of these elements will receive some type of NDE, Vibration Monitoring, or ID Visual VT3 examination. All the remaining elements in the risk-informed ISI program and those currently included in the Section XI ISI program will continue to receive Visual VT-2 examinations during system pressure tests.

Surry Unit 1 Comparison

Table 4.4-2 for Surry 1 is constructed similar to Table 4.4-1 for Millstone 3 presenting a comparison between a risk-informed program and the current ASME Section XI requirements on piping. An identification of piping segments that are part of plant augmented programs is also included for Surry 1.

As in the Millstone 3 results, Surry 1 will be performing examinations at elements not currently required to be examined by ASME Section XI. Some examples of these additional examinations are provided:

- Several elements currently classified as Non-Code Class will receive examination. These examinations will be in addition to applicable augmented inspection programs that will be continued. Non-Code Class systems or portions of systems that are Non-Code Class identified as having piping segments requiring examination include auxiliary steam, steam generator blowdown, and feedwater. The ASME Section XI Code does not address Non-Code Class systems.

- Several elements currently classified as Class 3 will receive examination. Class 3 systems or portions of systems that are Class 3 identified as having piping segments requiring examination include auxiliary feedwater and component cooling water. The

ASME Section XI Code does not require NDE (volumetric or surface) examinations on Class 3 systems.

- The ASME Section XI Code does not require volumetric and surface examinations of piping less than 3/8 inch wall thickness on Class 2 piping greater than 4 inch nominal pipe size (NPS). The welds are counted for percentage requirements, but not examined by NDE. The risk-informed program will require examination of these welds. Examples where the risk- informed process required examination and the Code did not are the suction lines to the charging pumps (high head safety injection).

Since the risk-informed inspection program will require examinations on a large number of elements constructed to lesser inspection requirements, the program in all cases will determine through an engineering evaluation the root cause of any unacceptable flaw or relevant condition found during examination. The evaluation will include the applicable service conditions and degradation mechanisms to establish that the element(s) will still perform their intended safety function during subsequent operation. Elements not meeting this requirement will be repaired or replaced.

The evaluation will include whether other elements on the segment or segments are subject to the same root cause and degradation mechanism. Additional examinations will be performed on these elements up to a number equivalent to the number of elements required to be inspected on the segment or segments initially. If unacceptable flaws or relevant conditions are again found similar to the initial problem, then the remaining elements identified as susceptible will be examined.

No additional examinations will be performed if there are no additional elements identified as being susceptible to the same service related root cause conditions or no degradation mechanism.

Table 4.4-2
SURRY UNIT 1 STRUCTURAL ELEMENT SELECTION
RESULTS AND COMPARISON TO ASME SECTION XI
1989 EDITION REQUIREMENTS

System	Number of High Safety-Significant Segments (No. in Augmented Program)	Risk-Informed ISI Program High Safety-Significant Structural Elements[a]				ASME Section XI ISI Program 1989 Edition Examination Category Weld Selections				Total Number of Segments Credited in Augmented Programs
		CLASS 1	CLASS 2	CLASS 3	NON-CODE	B-F	B-J	C-F-1	C-F-2	
ACC	0						9			0
AFW[c]	11 (5)		5	3+3[e]					6	16
AS	2				2					0
BD[c]	6 (6)		3		3					12
CC	6			13+4[e]						0
CH	8	12+6[b]+4[e]	1+3[e]				39			3
CN[c]	0									6
CS	0		2[h]					9		2
CW[d]	4									0
ECC	7	12	1				4	24		1
EE	0									0
FC	0									0
FW[c]	13 (13)				7				6	17
HHI[c]	14 (1)		15+2[h]						63	5
LHI[c]	7 (1)		7+3[b]+2[h]						23	1

Table 4.4-2 (cont.)
SURRY UNIT 1 STRUCTURAL ELEMENT SELECTION
RESULTS AND COMPARISON TO ASME SECTION XI
1989 EDITION REQUIREMENTS

System	Number of High Safety-Significant Segments (No. in Augmented Program)	Risk-Informed ISI Program High Safety-Significant Structural Elements[a]				ASME Section XI ISI Program 1989 Edition Examination Category Weld Selections				Total Number of Segments Credited in Augmented Programs
		CLASS 1	CLASS 2	CLASS 3	NON-CODE	B-F	B-J	C-F-1	C-F-2	
MS[c]	3 (3)		2+1[g]						18	23
RC	11	20+10[h,i]+3[h]				18	146			3
RH	4	1	4				4	12		0
RS	2		2					4		0
SW[d]	8			5+3[e]						0
VS	2			2						0
TOTAL	108	68	53	33	12	18	202	49	116	89

Summary: Current ASME Section XI selects a total of 385 non-destructive exams while the proposed RI-ISI program selects a total of 136 exams (166 - 30 visual exams), which results in a 65% reduction.

Notes for Table 4.4-2

a. System pressure test requirements and VT-2 visual examinations shall continue to be performed in all ASME Code Class 1, 2, and 3 systems.
b. VT-2 area exam at specific location.
c. Augmented programs for erosion-corrosion and/or high energy line break continue.
d. Pipe coatings program will be maintained.
e. VT-2 for entire segment.
f. UT thickness only.
g. Segment MS-34 has no weld; VT-2 for entire segment.
h. Ten examinations added for change in risk considerations.
i. Six examinations added for defense-in-depth at the reactor vessel outlet nozzle to pipe welds.

4.4.2 Risk/Safety Evaluation

The effect of the RI-ISI program on risk must be estimated in order to ensure that a program that could have an adverse effect on safety is not implemented. The aggregate effects of changes to examination requirements must be evaluated. The assessment should consider. changes in ISI effectiveness relative to both the inspection location and the examination method, frequency and level of qualification.

The region in which the piping segment is categorized in the structural element selection matrix (Figure 3.7-1) can be used to guide the evaluation:

- The piping segments in Region 4 should result in a risk neutral impact compared to current ASME Section XI requirements.

- The piping segments in Region 3 should result in a risk neutral impact, particularly if the Owner Defined Program remains the same. However, even if the Owner Defined Program is enhanced, the benefit should be minimal relative to safety, but could be substantial from an plant operation perspective.

- The piping segments in Region 2 should result in a risk neutral impact. The quantitative impact of NDE on these segments is minimal because of the low failure importance within these segments. However, for segments in this region that currently are not examined per current ASME Section XI requirements, the examination of these segments will add defense-in-depth to these high safety-significant locations.

- The piping segments in Region 1 should result in a risk neutral to a beneficial impact on risk. If new susceptible locations are identified, beyond those already examined per ASME Section XI or per an Owner Defined Program, the examination method, frequency, and qualification could have a beneficial impact on risk. An appropriate selection of examination method, frequency and level of qualification could provide a level of improvement in failure probability of the given location depending on the mechanisms and loading conditions that are experienced.

The combined impact of the segments from all four regions is then evaluated to make an overall assessment of RI-ISI program changes on risk. If properly implemented, the RI-ISI should always result in a risk-neutral to risk-reduction compared to the current ASME Section XI program.

If the proposed changes result in a risk impact that is not acceptable, the results from each step of the process should be reviewed to identify where the inclusion of additional piping examinations would decrease the risk impact.

Millstone 3 Plant Evaluation

A comparison of the core damage frequency being addressed by the current ASME Section XI and by the proposed risk-informed ISI program is shown in Figure 4.4-1.

This comparison was based on the core damage frequency being addressed by examination of the 119 structural elements in the risk-informed ISI program and the 753 weld locations that are examined per current ASME Section XI requirements. If a structural element was being inspected in the current ASME Section XI program, then the CDF contribution for the segment containing that structural element was identified and was included in the total CDF being addressed for the system. Similarly, if a structural element is to be inspected in the proposed risk-informed ISI program, then the CDF for the segment containing that structural element was included in the calculation of the total CDF being addressed for the system. Examination of the current ASME Code weld locations addresses a CDF of 1.00E-08/yr (44%) while examination of the risk-informed ISI structural elements addresses a CDF of 2.25E-08/yr (98%) for pressure boundary piping failures (out of a total piping CDF of 2.28E-08/year). Thus, safety is enhanced with far less locations being inspected.

This figure shows the comparison by the systems as defined in the risk-informed program. For example, Table 4.4-1 shows no risk-informed ISI locations for the FWS system, but it shows ISI locations for current ASME Section XI requirements. However, because of the system definition used in the risk-informed ISI program, several locations classified under FWS in ASME Section XI are the same as those classified in the FWA system under the risk-informed ISI program (piping that is common to both the FWA and FWS systems was assigned to the FWA system in the risk-informed program).

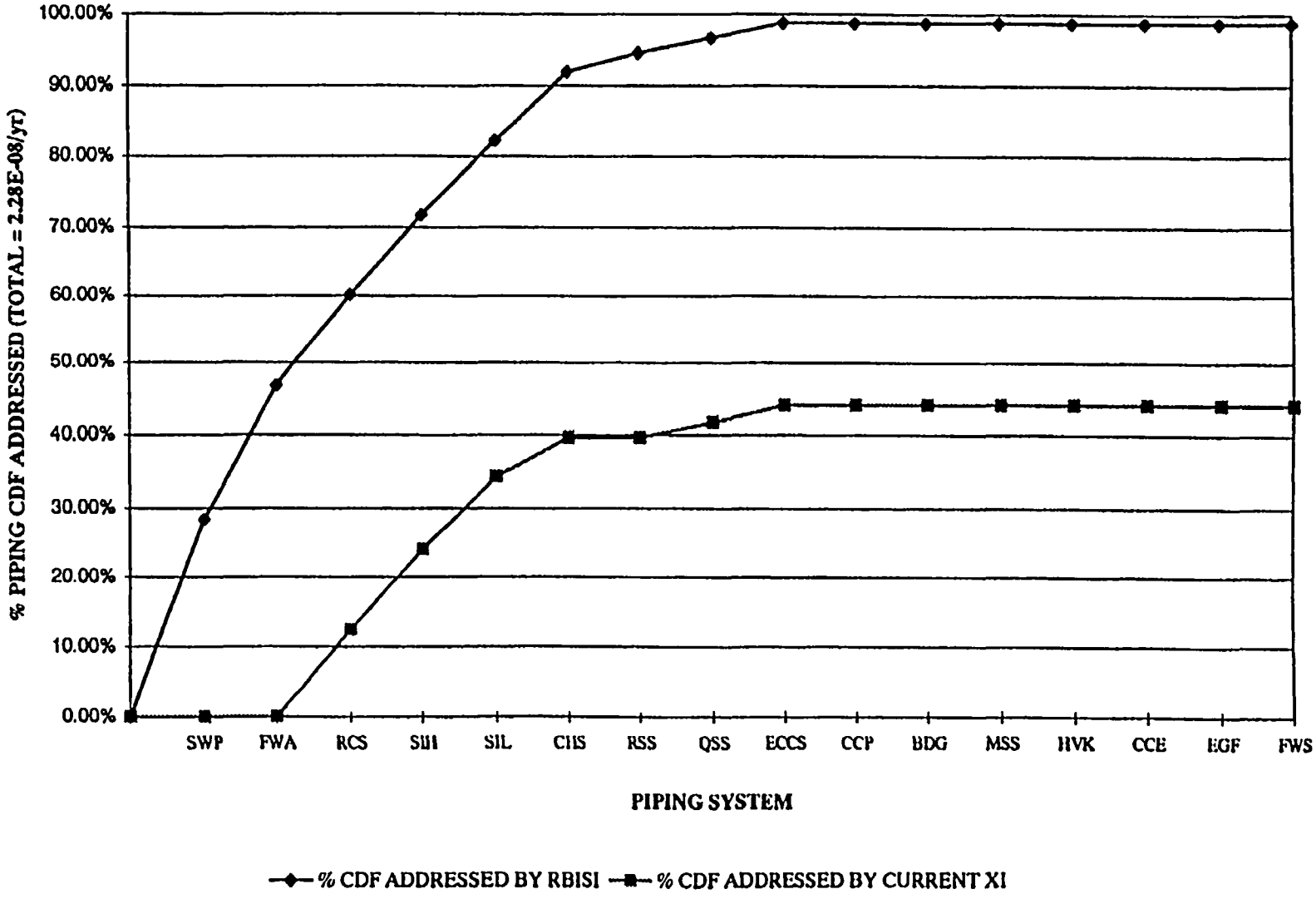

Figure 4.4-1 Millstone Unit 3 Comparison of CDF Results on a Piping System Level

This comparison also assumes 100% effectiveness in detection of precursors to failures for both the Section XI and risk-informed ISI locations in the high safety-significant segments. Credit for leakage testing in finding these precursors by either program in both the high safety-significant and low safety-significant piping segments is not taken in this evaluation.

The total piping core damage frequency is a small fraction of the total plant core damage frequency of 5.87E-05/yr. Examination of the plant piping at the risk-informed locations, however, will verify that the risk of piping pressure boundary failure remains a small contributor to total risk as the unit ages over its licensed life.

Surry Evaluation

A comparison of the Surry results from the proposed risk-informed ISI program and that of the current Section XI ISI program was made to evaluate the change in risk. Two approaches were used to compare the CDF and LERF changes.

The first approach (similar to the Millstone 3 evaluation) assumed that for any segment a) in the current Section XI program (for the Section XI risk calculation) or b) in the proposed RI-ISI program (for that calculation) or, c) in the augmented program, the risk associated with that segment would be addressed completely (with 100% effectiveness). The results from this approach are shown in Figures 4.4-2 and 4.4-3 by system, for CDF and LERF respectively.

As shown by the figures, the RI-ISI program (with augmented) addresses approximately 86% of the CDF risk while the current Section XI (with augmented) addresses about 53%. Similarly, the RI-ISI program (with augmented) addresses approximately 94% of the LERF risk while the current Section XI addresses only 20%. The systems which lead to the improvement which are addressed in the RI-ISI program are blowdown, feedwater, main steam and auxiliary feedwater.

The second approach evaluates the change in risk with the inclusion of the probability of detection as determined by the SRRA model. For this risk comparison between the current Section XI ISI program and the recommended risk-informed ISI program calculations, the following conditions are used:

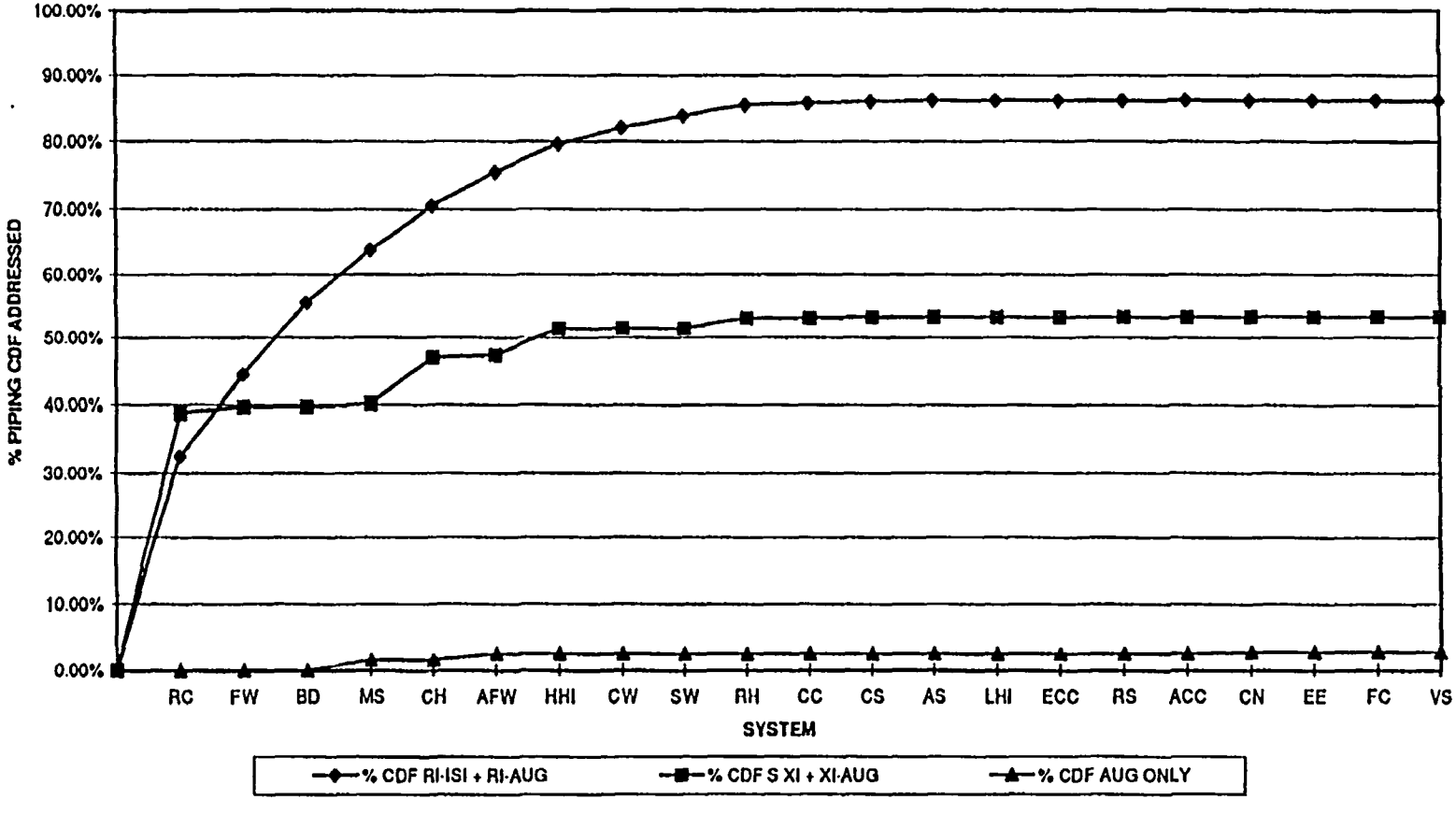

Figure 4.4-2 Surry Unit 1 Comparison of CDF Results on a Piping System Level

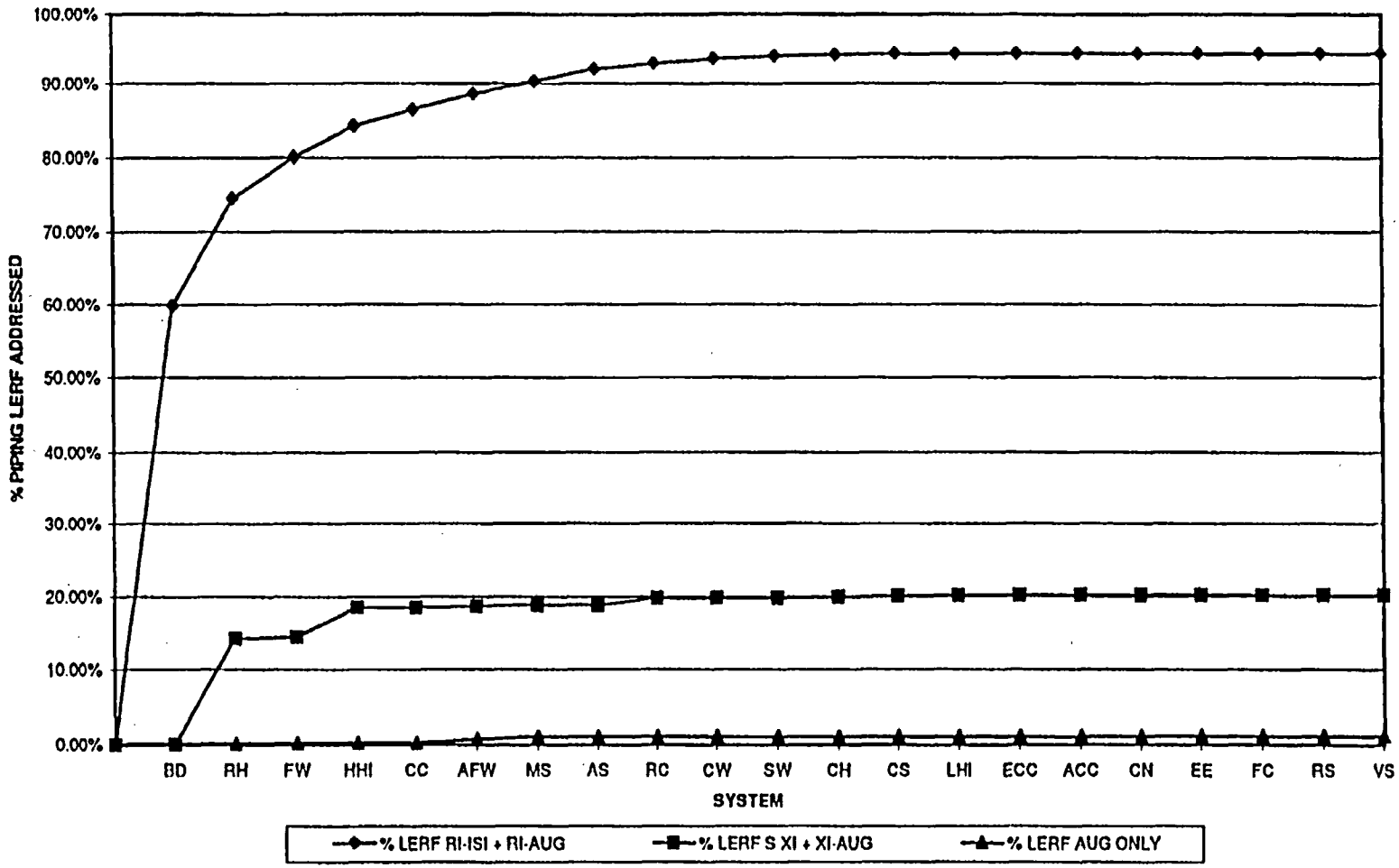

Figure 4.4-3 Surry Unit 1 Comparison of LERF Results on a Piping System Level

- For piping segments that are part of augmented programs (such as erosion-corrosion and stress corrosion cracking), the SRRA failure probabilities with ISI are used (no change from previous calculations).

- For other piping segments, the failure probability with ISI for those being inspected by NDE are used.

- For the RCS piping segments, the failure probability with ISI for those being inspected by NDE and without ISI for those not being inspected was used along with credit for leak detection.

- The risk calculations are performed for all 4 cases (CDF and LERF with and without operator action). The calculations with operator recovery action from the piping failure assumes perfect operators, that is, no human error probabilities will be included.

- For piping segments that are in both the Section XI program and the augmented program, no additional credit is given to the Section XI program in the calculations.

- For piping segments that are in both the RI-ISI program and the augmented program, no additional credit is given to the RI-ISI program in the calculations.

- For selected piping segments that are in both the RI-ISI program and the augmented program in which additional or more stringent examinations are proposed beyond the augmented program, a factor of three improvement (based on work done by Khaleel and Simonen, 1994 which identified an improvement factor based on failure potential) in the failure probability was credited.

- For selected piping segments that are in both the current Section XI program AND an augmented program in which the Section XI proposes that additional or more stringent examinations beyond the augmented program are performed, a factor of three improvement in the failure probability is credited.

Criteria For Evaluation of Results

The suggested criteria for evaluating the results of the study are the following:

1. The total change in piping risk should be risk neutral or a risk reduction in moving from the current Section XI to RI-ISI. If not, the dominant system and piping segment contributors to the RI-ISI risk should be reexamined in an attempt to identify additional examinations which would make the application at least risk neutral. If additional examinations can be proposed, then the change in risk calculations should be revised to credit these additional examinations until at least a risk neutral position is achieved.

2. Once this is achieved, an evaluation of the dominant system contributors to the total risk for the RI-ISI (e.g., system contribution to the total is greater than approximately 10%) should be examined to identify where no improvement has been proposed (i.e., where moving from no ISI or Section XI ISI to RI-ISI, the risk has not changed and it is still a dominant contributor to the total CDF/LERF). If any systems are identified where this is the case, the dominant piping segments in that system should be reevaluated in an attempt to identify additional examinations which would reduce the overall risk for these systems and thus possibly the overall risk.

3. The results should be reviewed to identify any system in which there is a risk increase in moving from the Current Section XI program to the RI-ISI program. The following guidelines are suggested to identify if additional examinations are necessary:

   - If the CDF increase for the system is approximately a) greater than two orders of magnitude below the risk-informed ISI CDF for that system or b) greater than 1E-08, (whichever is higher), then at least one dominant segment in that system should be reevaluated to identify additional examinations

   - If the LERF increase for the system is a) greater than two orders of magnitude below the risk-informed ISI LERF for that system or b) greater than 1E-09 (whichever is higher), then at least one dominant segment in that system should be reevaluated to identify additional examinations

4. If any additional examinations are identified, the change in risk calculations should be revised to credit these additional examinations.

These criteria will provide added assurance that the risk from moving to the RI-ISI program has been addressed. For Surry, this evaluation resulted in the identification of 10 piping segments for which examinations are now required.

The results from the risk comparison for Surry are shown in Table 4.4-3 and Figure 4.4-4. As can be seen from the table and figure, the risk-informed ISI program reduces the risk associated with piping CDF/LERF slightly more than the current Section XI program while reducing the number of examinations required.

Table 4.4-3
SURRY UNIT 1 COMPARISON OF CDF/LERF FOR NO ISI, CURRENT SECTION XI AND RISK-INFORMED ISI PROGRAMS

Case	Piping CDF/LERF Without ISI	Piping CDF/LERF Current Section XI	Piping CDF/LERF Risk-Informed
CDF No Operator Action	6.28E-05	6.09E-05	5.34E-05
CDF with Operator Action	4.05E-06	2.29E-06	1.67E-06
LERF No Operator Action	5.18E-06	5.09E-06	4.63E-06
LERF with Operator Action	4.46E-07	3.63E-07	1.54E-07

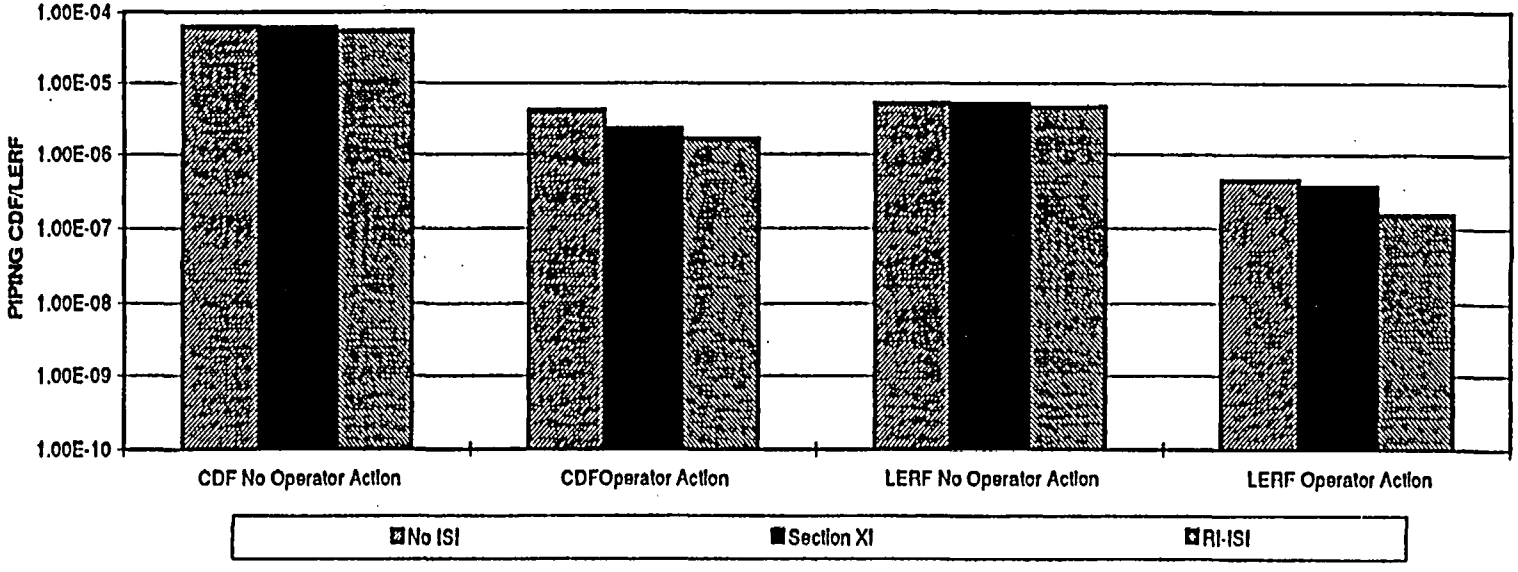

Figure 4.4-4 Surry Unit 1 Comparison of CDF/LERF for No ISI, Current Section XI, and Risk-Informed ISI Program

A comparison between the total piping CDF/LERF and the total plant CDF/LERF reported for Surry in Section 3.1.4 (total plant CDF of 7.2E-05/year and total plant LERF of 1.1E-05/year) was not made because both the piping CDF/LERF and the plant CDF/LERF address large, medium, and small LOCAs, steam line breaks and other events (i.e., there is overlap between the two models).

4.4.3 Cost-Benefit Evaluation

Upon completion of general NRC approval allowing use of risk-informed ISI methodologies contained in this WOG Topical Report for piping, a nuclear utility owner will decide whether to develop their own risk-informed program. The owner will have the option to identify and implement alternative approaches to achieve the same or greater level of safety than is obtained through implementation of ASME Section XI. The choice of alternatives will be first predicated on achieving the same or greater safety (as ASME Section XI), and then on the associated economic and manrem burden associated with the various alternatives.

To support the WOG risk-informed ISI applications, both Northeast Utilities and Virginia Power performed cost-benefit evaluations at the time the respective studies at Millstone Unit 3 and Surry Unit 1 were being completed. Northeast Utilities reviewed prior ISI program information to estimate both the direct and indirect inspection costs and to estimate person-rem savings from implementation of the program. Virginia Power used average NDE examination costs and assumed that similar person-rem savings could be achieved as Northeast Utilities showed for Millstone Unit 3. Virginia Power also estimated how much effort it would take to repeat a risk-informed ISI application for heir other units. A paper by Nitin J. Shah, et al (1997) also captures their cost-benefit study along with lessons learned from performing the pilot study at Surry Unit 1. The next sections summarize the Northeast Utilities and Virginia Power studies to help other utilities in determining the cost-benefit of doing a risk-informed ISI program.

<u>Northeast Utilities Study</u>

Northeast Utilities has provided estimated savings from implementation of a risk-informed inservice inspection program to the piping systems at Millstone Unit 3 in the Supplemental Information enclosed within this topical report. This section builds on this information to provide an indication of the cost-benefit for all WOG member plants.

An estimated savings of $332,000 per outage in direct inspection related costs has been identified for Millstone Unit 3. A savings of 15 person-rem per outage has also been estimated for inspection of Millstone Unit 3 piping using a risk-informed approach.

The Westinghouse Owners Group has established estimated standard cost factors for parameters that are impacted by their programs using a blending of information from the membership. These factors are used in this cost-benefit evaluation, where applicable.

Table 4.4-4 shows net present values of estimated savings from implementation of a risk-informed inspection program for nuclear plant piping systems. As shown in the table, significant savings can be achieved in direct costs. Other indirect cost savings are also expected to be significantly reduced. These indirect cost savings are expected to include:

- Outage critical path reduction (which is becoming more important as utilities continue to reduce outage length)
- Program administration cost reduction
- Insurance premium reduction
- Cost reduction associated with evaluating flaw indications in low safety-significant piping

In addition, a risk-informed ISI program should enhance the finding of precursors to potential failures because inspection resources are focused on locations of highest failure potential in high safety-significant piping segments. The identification of these precursors should help minimize events like leaks, which result in significant business interruption losses. In summary, the development and implementation of a risk-informed ISI program provides the opportunity to significantly reduce burden while maintaining or enhancing safety.

The total effort to perform the risk-informed ISI program for the representative WOG plant exceeded the direct savings that would be gained during one outage at that unit. However, more than half of that cost was associated with learning and adapting the methodology to be applied across all the piping systems at a large nuclear plant, which is a first-of-a-kind application. In addition, there were considerable costs associated with interfacing with ASME, NEI, and the NRC on this project.

Table 4.4-4 ESTIMATED SAVINGS FROM RISK-INFORMED INSPECTION FOR TYPICAL 4-LOOP PLANT* (MILLSTONE 3)		
Description	**Considerations**	**Net Present Value of Savings****
Direct Costs		
Actual Inspection Costs	Includes NDE, scaffolding and insulation removal	$1,889,660
ALARA Costs	Assuming approximately 15 REM per outage savings and using $10,000/REM	$846,650
	TOTAL DIRECT COST SAVINGS	$2,736,310
Indirect Costs		
Administrative Costs	Paper work including work orders, surveillances and clearances	Not estimated
Outage Critical Path	Reduction of 1-2 days of outage time anticipated as outages become shorter (NPV savings assumes 0.5 day at $340,000 per day)	$1,314,170
Insurance Premiums		Not estimated
Analysis Costs	From flaw indication evaluations in low safety-significant piping segments	Not estimated
	TOTAL ESTIMATED DIRECT AND INDIRECT SAVINGS	> $4,050,480

* The estimated savings for 2-loop and 3-loop units will obviously be lower than these values depending on the number of piping locations currently being inspected to the requirements of ASME Section XI. The effort to perform a risk-informed ISI program, however, will require less resources relative to the number of piping system segments to be addressed.

** Assumes discount rate of 7.5% and estimated savings at each outage over the remaining 30 years of operating license life.

It is believed by the team members that the risk-informed ISI program can be applied in the future at a cost much less than the direct savings that are gained from piping examinations done in one outage from implementation of the program.

Virginia Power Study

The Surry-1 pilot project endeavored to measure the relative level of safety provided by the risk-informed methodology that should provide a basis for general NRC approval via this Topical report that other utilities will follow.

Preliminary cost figures have been developed from the Surry-1 project, both actual and projected, to better understand the cost of implementing a risk-informed ISI program. A man-week (ManWk) assessment follows:

1) System scope - 2.5 Manweeks
2) Segment identification - 7.5 Manweeks
3) Conditional consequence quantification - 30 Manweeks
4) Failure probability quantification - 46 Manweeks
5) Risk evaluation - 3.0 Manweeks
6) Expert panel categorization - 24 Manweeks
7) Element & NDE selection - 12 Manweeks
8) Administrative - 4.0 Manweeks

Total: 129 Manweeks

A man-week cost was estimated at $2300. The estimate contains direct plus contractor costs brought in to support the project and provide training. The estimated cost to develop a program is approximately $300,000. Additionally, Virginia Power has three other similar units (North Anna 1 & 2 and Surry 2), where some reduction in cost can be obtained due to the similarity. It is estimated that all four units can be completed for approximately $950,000. This cost does not include WOG support funds requested for the Surry-1 pilot. These funds were considered unique to the pilot application (sensitivity studies, software alterations, research, etc.) and would not be required after rulemaking. The SRRA failure probability software was provided to the Surry project at no additional cost.

Program maintenance costs are assumed equivalent to the current program maintenance costs for the purpose of this analysis due to a lack of information and, therefore, are not considered in the evaluation. However, the program is a living program and will require more frequent updates when requirements necessitate it. As such, the maintenance costs will be higher, but probably only marginally.

Again, assuming equivalency in safety, management will want to recover the initial investment costs in the program over time or the process would be rejected rather quickly. The actual projected reduction is estimated at this time to be 65% (see Table 4.4-2), however savings can be plotted over various reduction percentages to ascertain the break-even point. Figures 4.4-5 and 4.4-6 provide some of this information. The plots assume that an average NDE examination costs $4000. One-third of the cost is direct NDE costs and two-thirds is associated with support work (scaffolding, insulation removal and reinstallation, cleaning, etc.). Figure 4.4-6 additionally assumes an exposure reduction at 80% (15 Rem / 4 loop plant, 10 Rem / 3 loop plant) and assumes a cost of $10,000/Rem. The exposure reduction is then reduced linearly with reduction percentage. The plots are based upon current ASME Section XI programs at three Westinghouse PWRs.

By assuming a 65% reduction in examination at an older 3-loop plant, such as Surry-1, due to the risk-informed methodology, then Figure 4.4-5 indicates that the initial $300,000 investment, not considering exposure reduction, would be paid back in just over 3 years. Considering the exposure reduction (Figure 4.4-6) would reduce the time to approximately 2 years. The example of course is simplified and does not consider interest on investments, inflation or tax credits, which would also be considered in an economic evaluation. Larger plants return the initial investment quicker (12-18 months), since given the same reduction percentage, they have more welds in their current ASME Section XI program to be reduced from examination, as demonstrated in the Millstone-3 reference plant study.

Both the Northeast Utilities and Virginia Power cost-benefit studies show that the risk-informed ISI methodology described in this WOG Topical Report provides an opportunity for nuclear utilities to reduce cost while maintaining high levels of safety. The decision to implement such a program should be made with the knowledge that the process involves a significant technical and economic investment.

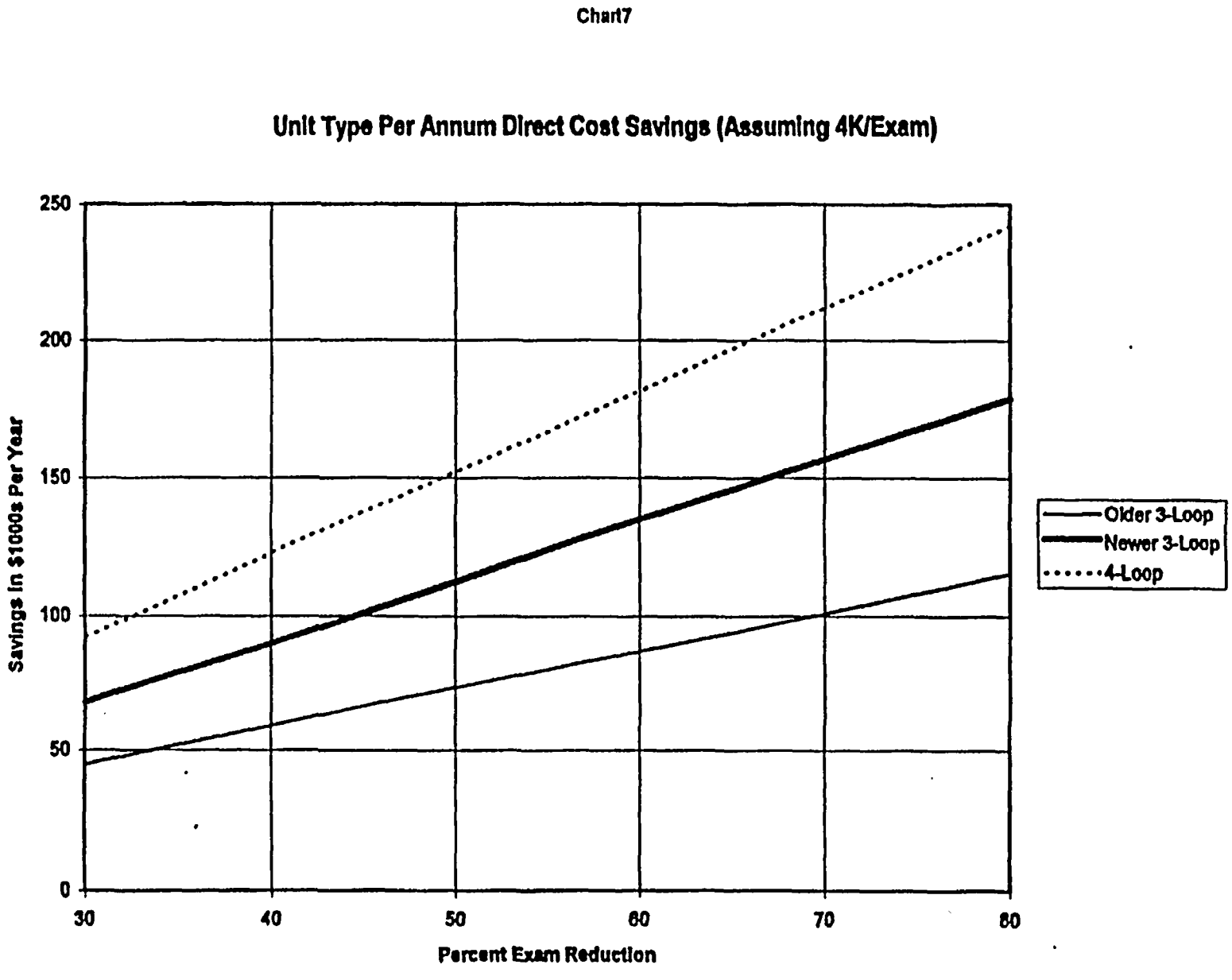

Figure 4.4-5 Unit Type Per Annum Direct Cost Savings (Assuming 4K/Exam)

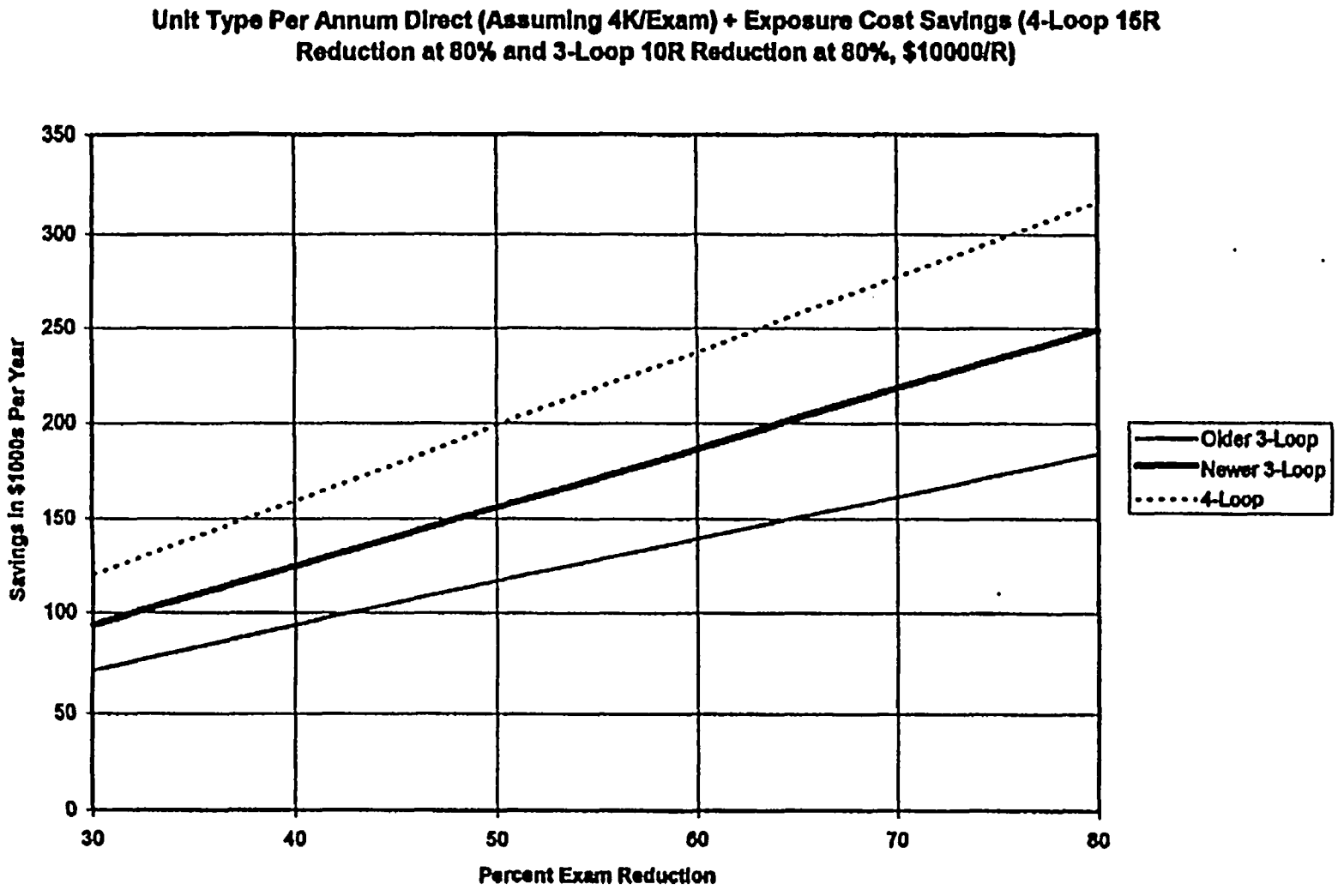

Figure 4.4-6 Unit Type Per Annum Direct (Assuming 4K/Exam) + Exposure Cost Savings (4-Loop 15R Reduction at 90% and 3-Loop 10R Reduction at 90%, $10000/R)

4.5 IMPLEMENTATION AND PROGRAM MONITORING

This subsection provides program requirements and recommendations for the activities associated with implementation, monitoring and corrective action descriptions necessary to support a RI-ISI program.

4.5.1 Implementation

The implementation of a RI-ISI program for piping should be initiated at the start of a plant's 10-year inservice inspection interval consistent with the requirements of the ASME Code Section XI, Edition and Addenda committed to by an Owner in accordance with 10 CFR 50.55a. However, implementation may begin at any point in an existing interval as long as the examinations are scheduled and distributed to be consistent with these requirements and those of this section. The requirements for these intervals are contained in ASME Section XI under IWA-2000 as they apply to Inspection Program B. Documentation of program updates shall be kept and maintained by the Owner on site for audit. Changes arising from the program updates should be evaluated using the change mechanisms described in existing applicable regulations (e.g., 10CFR50.55a, 10CFR50.59, and 10CFR50 Appendix B) to determine if the change to the RI-ISI program should be reported to the NRC. Each 10-year inspection interval is subdivided into inspection periods which end at 3, 7, and 10 years of plant service within each interval. Variations in these inspection program intervals and periods by plus or minus 1 year are allowed under ASME Section XI based on refueling outage situations and may be employed by an Owner who implements a RI-ISI program. These same basic RI-ISI program interval and period requirements shall also be used by Owners who choose to perform on-line NDE, but special considerations may have to be taken in regards to program updates during the performance of corrective actions that result from these examinations. When on-line NDE is performed as part of a RI-ISI program, it is the Owner's responsibility to address the special considerations that may require exceptions to the requirements of ASME Section XI or those in this section.

4.5.2 Program Monitoring

RI-ISI programs are living programs and should be monitored continuously. Monitoring of these programs encompasses many facets of feedback or corrective action which includes periodic updates based on inputs and changes resulting from plant design features, plant procedures, equipment performance, examination results, and individual plant and industry failure information. Once the Feedback Process Loop is completed as shown in Figure 4.5-1, all the information is fed back into the Overall Risk-Informed ISI Process of Figure 3.1-2. The periodic update is performed by evaluating the information from the Feedback Process Loop for its applicability to each step in the Overall Risk-Informed ISI Process and begins at the Scope/System and Segment Definition block and ends at the Implement Program block. Changes should be evaluated to determine if the change should be reported to the NRC.

Since the Probabilistic Safety Assessment (PSA) used in the development of any RI-ISI program is a state of knowledge at the time of implementation, any significant changes in these parameters that effect the total plant's Core Damage Frequency (CDF) or Large Early Release Frequency (LERF) by a critical factor should be considered, when identified, as expeditiously as possible. Plant administrative procedures should be in place to input these changes into the PSA and incorporate any relevant results into the RI-ISI program outside of any periodic updates. These expedited program updates should be performed to address significant PSA changes or the occurrence of significant plant events. Significant plant events may include such events as pipe ruptures, earthquakes, or severe operational transients.

- *Periodic Updates.* Updates to a RI-ISI program are performed at least on a period basis to coincide with the inspection program requirements contained in ASME Section XI under Inspection Program B. These updates are required following the completion of all scheduled examinations in each inspection period.

- *Plant Design Feature Changes.* As plant design changes are implemented, changes to the inputs associated with RI-ISI program segment definition and element selections may occur. It is important to address these changes to the inputs used in any engineering assessment or Structural Reliability/Risk Assessment (SRRA) model that may effect resultant failure probabilities in terms of pipe leakage, disabling leakage or full rupture

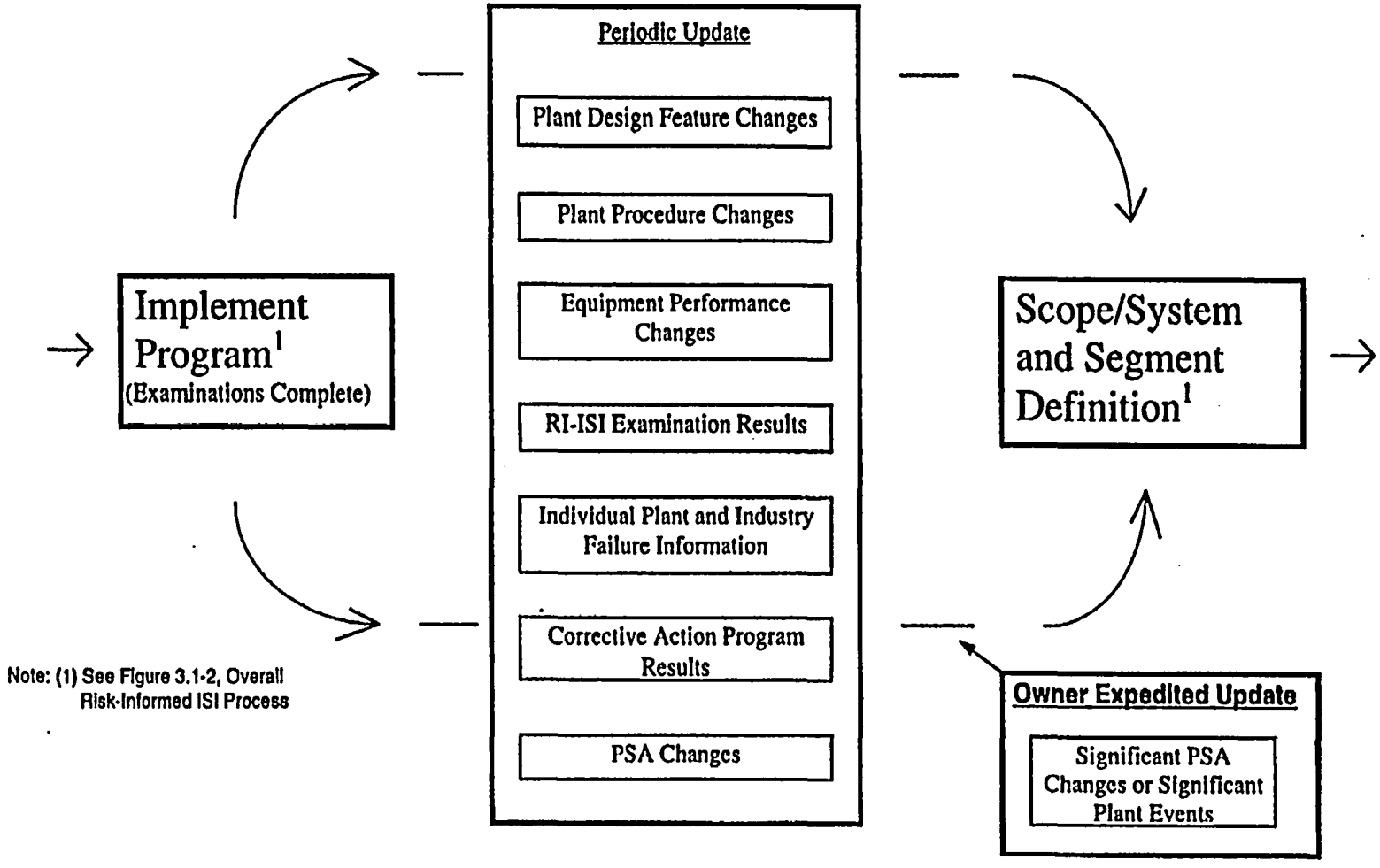

Figure 4.5-1 Feedback Process Loop

events during RI-ISI program periodic updates. Some examples of these inputs would include the following:

- Material and Configuration Changes
- Welding Techniques/Procedures
- Construction and Preservice Examination Results and
- Stress Data (Operating Modes, Pressure, and Temperature Changes)

In addition, plant design changes could result in significant changes to a plant's CDF or LERF, which in turn could result in a change in consequence for a system's piping segments.

- *Plant Procedure Changes.* Changes to plant procedures that affect system operating parameters or the ability of plant operations personnel to perform actions associated with accident mitigation should be included for review in any RI-ISI program periodic update. Additionally, changes in these procedures which affect component test intervals, valve lineups, or operational modes of equipment shall also be assessed for their impact on changes in postulated failure mechanism initiation or CDF/LERF contribution.

- *Equipment Performance Changes.* Equipment performance changes should be reviewed with system engineers and maintenance personnel to ensure that changes in performance parameters such as valve leakage, increased pump testing or identification of vibration problems is included in the evaluation of the RI-ISI program periodic update. Specific attention should be paid to these conditions if not previously assessed in the qualitative inputs to the element selections of the RI-ISI program.

- *Examination Results.* When scheduled RI-ISI program NDE examinations and system pressure tests (Refer to 4.3) are completed with corresponding VT-2 visual examinations for leakage, and flaws or indications of leakage are identified, the existence of these conditions should be evaluated as part of the RI-ISI program periodic update.

Current ASME Section XI ISI examination reporting requirements do not contain provisions for reporting examination results of ASME Code Class 3 items nor do they address HSS or HSS Non-Code Class items that could be included in a RI-ISI program. In order to compensate for

these deficiencies in the current requirements, it is recommended that Owners use Code Case N-532 Alternative Requirements to Repair and Replacement Documentation Requirements and Inservice Summary Report Preparation and Submission as Required by IWA-4000 and IWA-6000 Section XI Division 1 with the supplemental requirements contained in this section.

Code Case N-532 provides for reporting examination and pressure test results on a periodic basis for all ASME Code Class 1, 2, and 3 items consistent with the periodic updates described in this section. When using Code Case N-532 RI-ISI results would be documented on an OWNER'S ACTIVITY REPORT FORM OAR-1 which includes the Abstract Tables contained in the Code Case. Figure 4.5-2 shows a sample Form OAR-1 with these Abstract Tables. Owners should be aware that Code Case N-532 is not generically approved for use by the NRC, but that it has been approved on a plant specific basis and is available to the industry subject to NRC approval. After receiving NRC approval to use Code Case N-532 for a RI-ISI program the following should apply:

A Form OAR-1 per N-532 shall be prepared and certified upon completion of all examinations and system pressure tests each refueling outage. All Form OAR-1s prepared during an inspection period shall be submitted to the NRC following the end of the inspection period. The following tables are part of each Form OAR-1.

N-532, Table 1 – Abstract of examinations and tests shall include all HSS piping items examined by NDE and HSS and LSS system pressure tests performed in accordance with requirements of a RI-ISI program regardless of ASME Code Classification.

N-532, Table 2 – Items with flaws that required evaluation for continued service shall include all HSS piping items subject to NDE in accordance with a RI-ISI program. ASME Section XI requires that analytical evaluation of ASME Code Class 1 and 2 examination results be submitted to the regulatory authority having jurisdiction at the plant site in accordance with IWB-3134(b) and IWC-3125(b). It is recommended that for a RI-ISI program analytical evaluations be submitted to the NRC for review prior to returning the component or system to service. Requirements for analytical evaluation submittals shall be applicable to all HSS piping items subject to NDE regardless of ASME Code Classification. When acceptance criteria for ASME Code Class 3 and HSS Non-Code Class piping items does not exist in ASME Section XI, the Owner shall use the provisions of IWA-3100(b) or any applicable acceptance criteria contained in the Owner's CLB.

FORM OAR-1 OWNER'S ACTIVITY REPORT

Report Number _____

Owner _____
(Name and Address of Owner)

Plant _____
(Name and Address of Plant)

Unit No. _____ (if applicable) Commercial service date _____ Refueling outage no. _____

Current inspection interval _____
(1st, 2nd, 3rd, 4th, other)

Current inspection period _____
(1st, 2nd, 3rd)

Edition and Addenda of Section XI applicable to the inspection plan _____

Date and revision of inspection plan _____

Edition and Addenda of Section XI applicable to repairs and replacements, if different than the inspection plan _____

CERTIFICATE OF CONFORMANCE

I certify that the statements made in this Owner's Activity Report are correct, and that the examinations, tests, repairs, replacements, evaluations, and corrective measures described by this report conform to the requirements of Section XI.

Certificate of Authorization No. _____ (if applicable) Expiration Date _____

Signed _____ Date _____
Owner or Owner's Designee, Title

CERTIFICATE OF INSERVICE INSPECTION

I, the undersigned, holding a valid commission issued by the National Board of Boiler and Pressure Vessel Inspectors and the State or Province of _____ and employed by _____ of _____ have inspected the items described in this Owner's Activity Report, during the period _____ to _____, and state that to the best of my knowledge and belief, the Owner has performed all activities represented by this report in accordance with the requirements of Section XI.

By signing this certificate neither the Inspector nor his employer makes any warranty, expressed or implied, concerning the examinations, tests, repairs, replacements, evaluations and corrective measures described this report. Furthermore, neither the Inspector nor his employer shall be liable in any manner for any personal injury or property damage or a loss of any kind arising from or connected with this inspection.

_____ Commissions _____
Inspector's Signature — National Board, State, Province, and Endorsements

Date _____

This form (E00127) may be obtained from the Order Dept., ASME, 22 Law Drive, Box 2300, Fairfield, NJ 07007-2300.

Figure 4.5-2 Sample Form OAR-1 with Abstract Tables 1, 2, and 3

TABLE 1
ABSTRACT OF EXAMINATIONS AND TESTS

Examination Category	Total Examinations Required for The Interval	Total Examinations Credited for This Period	Total Examinations Credited (%) For The Period	Total Examinations Credited (%) To Date for The Interval	Remarks

TABLE 2
ITEMS WITH FLAWS OR RELEVANT CONDITIONS THAT REQUIRED EVALUATION FOR CONTINUED SERVICE

Examination Category	Item Number	Item Description	Flaw Characterization (IWA-3300)	Flaw or Relevant Condition Found During Scheduled Section XI Examination or Test (Yes or No)

TABLE 3
ABSTRACT OF REPAIRS, REPLACEMENTS, OR CORRECTIVE MEASURES REQUIRED FOR CONTINUED SERVICE

Code Class	Repair, Replacement, or Corrective Measure	Item Description	Description of Work	Flaw or Relevant Condition Found During Scheduled Section XI Examination or Test (Yes/No)	Date Complete	Repair/ Replacement Plan Number

Figure 4.5-2 (cont.) Sample Form OAR-1 with Abstract Tables 1, 2, and 3

N-532, Table 3 – Abstract of repairs, replacements, or corrective measures required for continued service shall include all HSS piping items subject to NDE or HSS and LSS items subject to system pressure tests in a RI-ISI Program regardless of ASME Code Classification. A repair or replacement plan and corresponding Form NIS-2A Repair/Replacement Certification Record is not required for HSS or LSS Non-Code Class piping items. Repairs or replacements performed on HSS or LSS Non-Code Class piping items shall be performed in accordance with the Owner's CLB.

Reporting requirements for examination results are shown in Figure 4.5-3.

- *Individual Plant and Industry Failure Information.* Review of individual plant maintenance activities associated with repairs or replacements that are or are not the result of RI-ISI program examinations, including identified flaw evaluations, is an important part of any RI-ISI program periodic update. Evaluating this information as it relates to an Owner's plant provides failure information and trending information that may have a profound effect on the element locations currently being examined under a RI-ISI program. When this review is coupled with industry failure information, a complete update results. Industry failure data is just as important to the overall program as the Owner's information. During the RI-ISI program periodic update individual plant failure information and industry data bases such as the Electric Power Research Institute (EPRI) data base and technical report titled Piping Failures in United States Nuclear Power Plants: 1961 - 1997, presently in draft format at the time of this report, and the Nuclear Performance and Reliability Data System/Equipment Performance and Information Exchange NPRDS/EPIX data base should be reviewed for applicability to the Owner's RI-ISI program.

4.5.3 Use of Corrective Action Programs

Each Owner of a nuclear power plant is responsible to have a corrective action program under the provisions of 10 CFR 50, Appendix B as follows:

"Measures shall be established to assure that conditions adverse to quality, such as failures, malfunctions, deficiencies, deviations, defective material and equipment, and nonconformances

EXAMINATIONS & PRESSURE TESTS
(Complete Per Refueling Outage
RI-ISI Program Requirements)

⇩

SUBMIT ALL ANALYTICAL FLAW EVALUATIONS TO NRC
(Recommended Submittal Prior To Returning
A System Or Component To Service)

⇩

COMPLETE A FORM OAR-1
(With Table Information Required
After Each Refueling Outage)

⇩

SUBMIT COMPLETED FORM OAR-1s
(With Table Information Required
To The NRC Following The End
Of Each Inspection Period)

Figure 4.5-3 Reporting Requirements for Examination Results

are promptly identified and corrected. In the case of significant conditions adverse to quality, the measures shall assure that the cause of the condition is determined and corrective action taken to preclude repetition. The identification of the significant condition adverse to quality, the cause of the condition, and the corrective action shall be documented and reported to appropriate levels of management."

In relation to a RI-ISI program for piping, the following process may be used to meet the intent of 10 CFR 50, Appendix B. Figure 4.5-4 is an example of how a unacceptable flaw, one that has been determined unacceptable through evaluation of examination results and subsequent ASME Section XI analytical evaluation, should be addressed in an acceptable corrective action program using attributes described in this subsection.

- *Identify.* Through the inspection location selection process established under a RI-ISI program, structural element examinations and system pressure tests performed should identify those conditions that would be adverse to quality in relation to identifying precursors to potential or actual leaks, disabling leaks, or pipe ruptures.

- *Characterize.* Depending on the timing of the condition identification and operational mode of the plant, (this may be a more critical situation when on-line NDE is performed) the first issues to be addressed are:

  - the effects on operability of safety-related systems, structures, or components;
  - if regulatory reporting is required (10 CFR 50.72 and 50.73); or
  - the condition results in an immediate plant/personnel safety or operational impact.

If the answer to any of these three considerations is "yes, then the plant's management must be immediately notified through plant established procedures.

- *Evaluate.* Evaluation has two parts: 1) determine the cause and extent of the condition identified, and 2) develop a corrective action plan or plans. Additional examinations shall be considered an acceptable method in providing this cause and extent determination. Under a RI-ISI program, extensive quantitative and qualitative insights

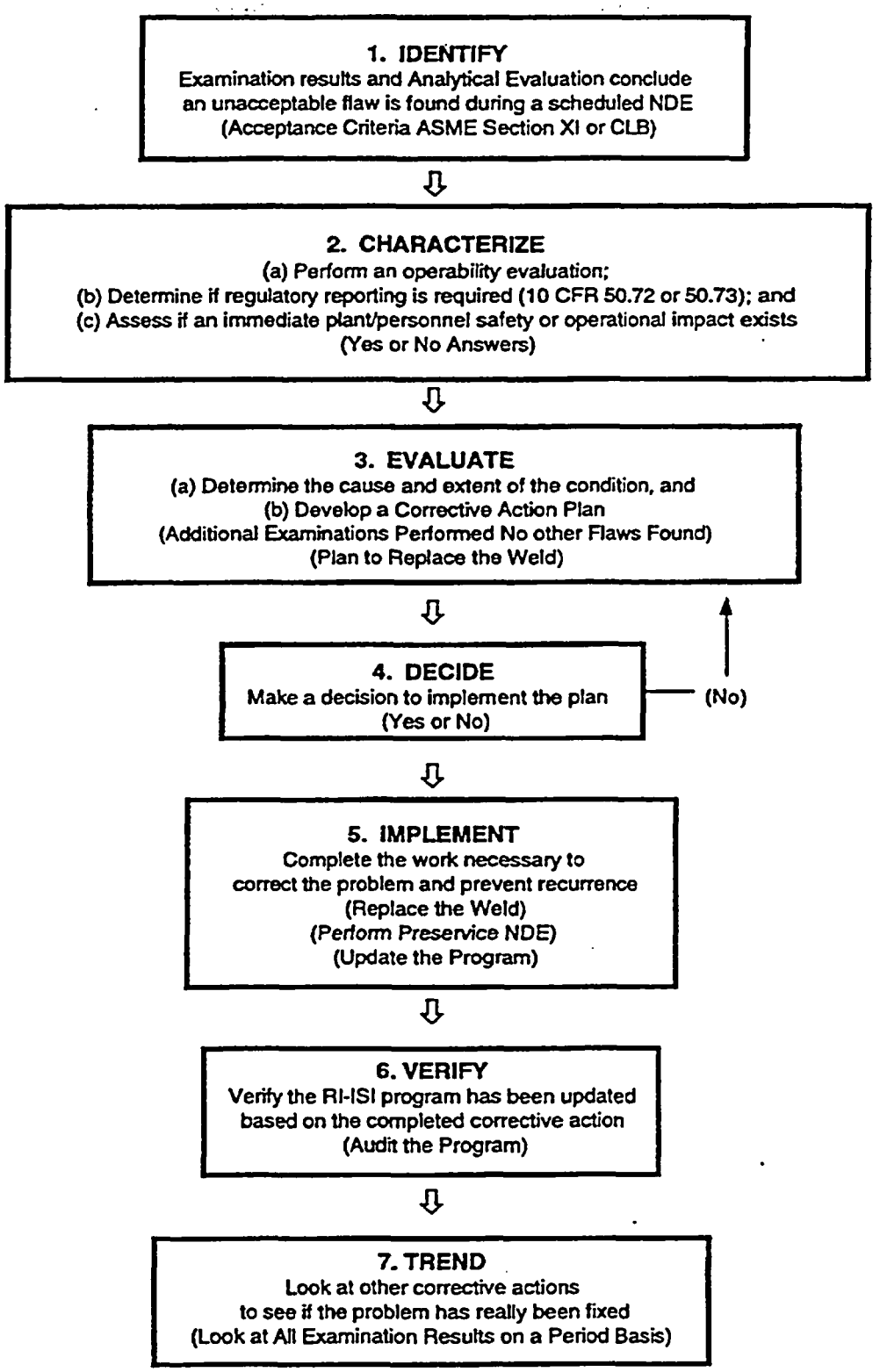

Figure 4.5-4 Corrective Action Program Example

have been used to identify postulated failure modes and elements to be examined. Performance of examinations on selected elements have been grouped into regions of High and Low failure importance and safety significance. These groupings provide the basis for additional examinations to be performed to determine the cause and extent of the condition identified. Acceptable sampling schemes such as those required in ASME Section XI under IWB-2430 shall be used. These additional examinations may be limited by piping segment, materials, service conditions, and failure modes already established in the RI-ISI program. Alternatively, due to the available information used in a RI-ISI program, an engineering evaluation may be used as a substitute for additional examinations to determine the cause and extent of the condition identified. If the engineering evaluation concludes that additional elements are not subjected to the same root cause or that no degradation mechanism exists (such as insignificant indications or conditions that have existed since original fabrication) then no additional examinations may be necessary.

Once the true extent of the condition has been identified and documented by an Owner, then a corrective action plan shall be developed. The plan could include repair, replacement, or monitoring of the condition identified depending on its safety significance. Several options of corrective action may be available to an Owner, but in all cases, needed success criteria must be defined and documented with the corrective action plan. These success criteria include the measurable attributes needed to evaluate the effectiveness of the corrective action in the prevention of a reoccurrence of the identified condition. The success criteria may be as simple as implementation of new element selections based on the new failure information during the next scheduled periodic update of the RI-ISI program and then performance of the examinations to prove that the issue has been corrected. Conversely, this criteria may require a plant design change depending on the condition identified and possible scheduled replacements might have to implemented on a routine basis to prevent the condition from reoccurring.

- *Decide.* A decision should be made by appropriate levels of management on the Owner's implementation of any corrective action plan. Agreement on the adequacy of the success criteria should be reached among the personnel involved and resources

allocated to implement the plan. Cost will inevitably play a part in the decision process, but it is more important to fix the problem correctly the first time so as to avoid recurrence in the future.

- *Implement.* Complete the work necessary to both correct the problem and prevent recurrence. In the case of a RI-ISI program, successive examinations may be one way to measure the effectiveness of the corrective action. For example, an Owner could follow the requirements for successive examinations as described in ASME Section XI, IWB-2420. These requirements could be used when flaws or conditions have been accepted by analytical evaluation and measurement of potential service related degradation is essential to avoiding a future failure of a piping structural element.

- *Verify.* The first item that must be verified is whether or not the planned corrective action was implemented. Management should do this as part of their normal daily work activities. In a RI-ISI program this may be as simple as having administrative procedures in place to ensure that the program has been updated as a result of the corrective action plan and checks of the examination data to ensure that the examinations are being performed as scheduled in the program.

  Once it has been determined that corrective actions have been implemented, the planned actions to verify that the desired results are obtained should be conducted. This is done by measuring the success criteria at regularly scheduled intervals in accordance with the corrective action plan. This measurement may indicate that based on the success criteria, the problem was not fixed or only partially fixed. Additional corrective action plans may have to be developed and implemented if this situation occurs.

- *Trend.* The purpose of trending is to identify conditions that are significant based not only on individual issues, but on accumulation of similar issues. Even issues assigned low significance may be deemed of greater significance if there is an increasing number of similar issues. During the RI-ISI program periodic updates a review of occurrences which required corrective actions should be performed by the plant expert panel or the plant ISI subpanel review team to determine if these insights should result in any additional or new examination location changes within the program.

SECTION 5
PLANT-SPECIFIC APPLICATION PROCESS

This section provides the framework for applying the risk-informed methods to a specific plant for piping inservice inspection. The tasks required to develop a comprehensive risk-informed inservice inspection program for piping are provided below. The tasks are:

- Scope Definition
- Segment Definition
- Consequence Evaluation
- Failure Probability Estimation
- Risk Evaluation
- Expert Panel Categorization
- Structural Element Selection
- Inspection Requirements
- Implement Program
- Feedback Loop

Figure 5-1 shows the process. Each task is summarized in the sections below.

Figure 5-2 identifies the skills necessary for a successful program.

5.1 SCOPE DEFINITION

The fluid systems contained in the plant, modeled in the PSA and considered as part of the Maintenance Rule, are identified and compared with the current classifications and required ISI examinations, and with the stress analysis. This review, along with other plant documentation, is used to determine which systems/classes, or portions of systems/classes, should be evaluated as part of the risk-informed ISI process. Given that system boundaries involve system functions and may also involve interfaces between different types of systems, the definition of these boundaries requires a careful, logical approach. All interfaces must be identified to ensure that there is consistency between the defined boundaries, when viewed from the systems on either side of each boundary, and that no safety functions are overlooked.

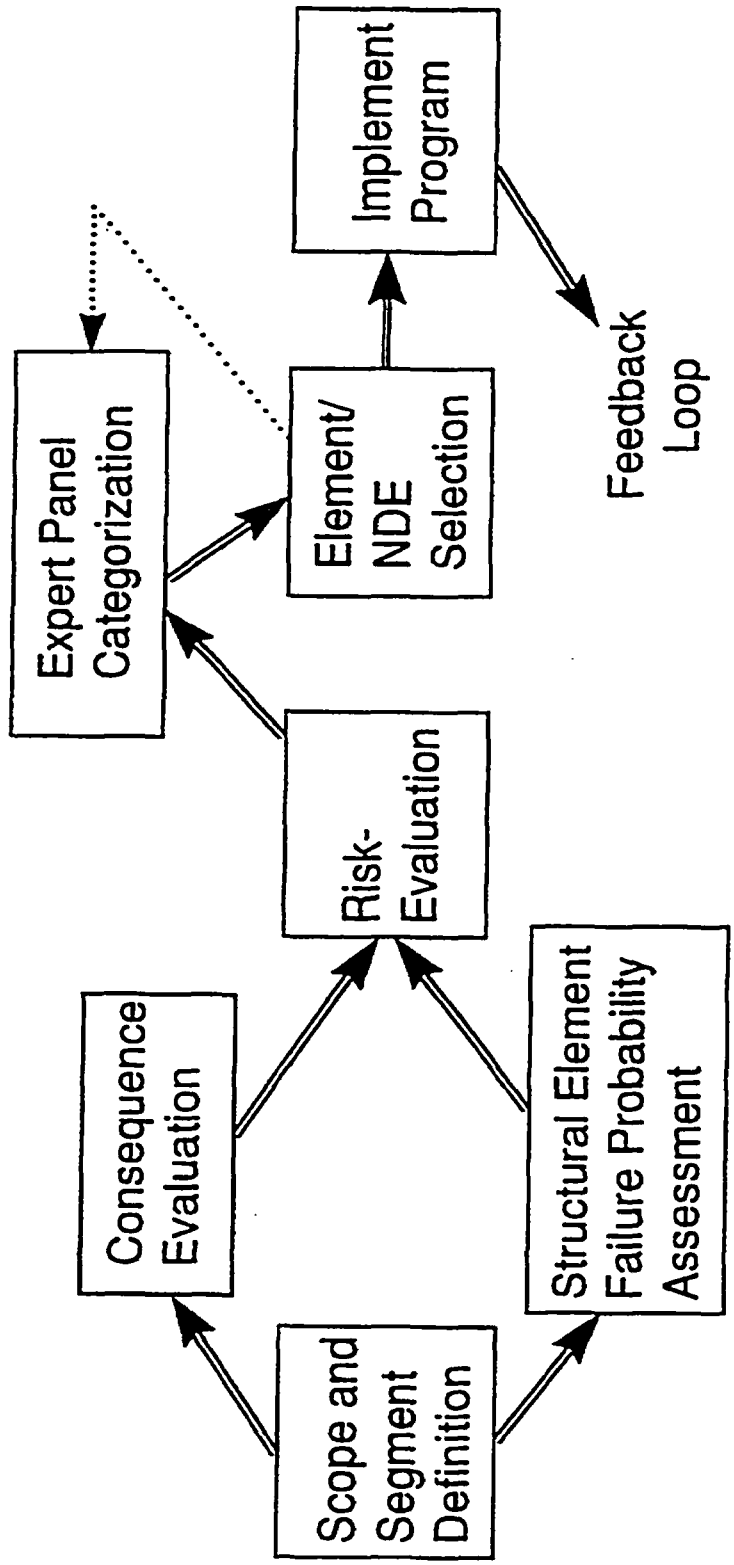

Figure 5-1 WOG Risk-Informed ISI Process

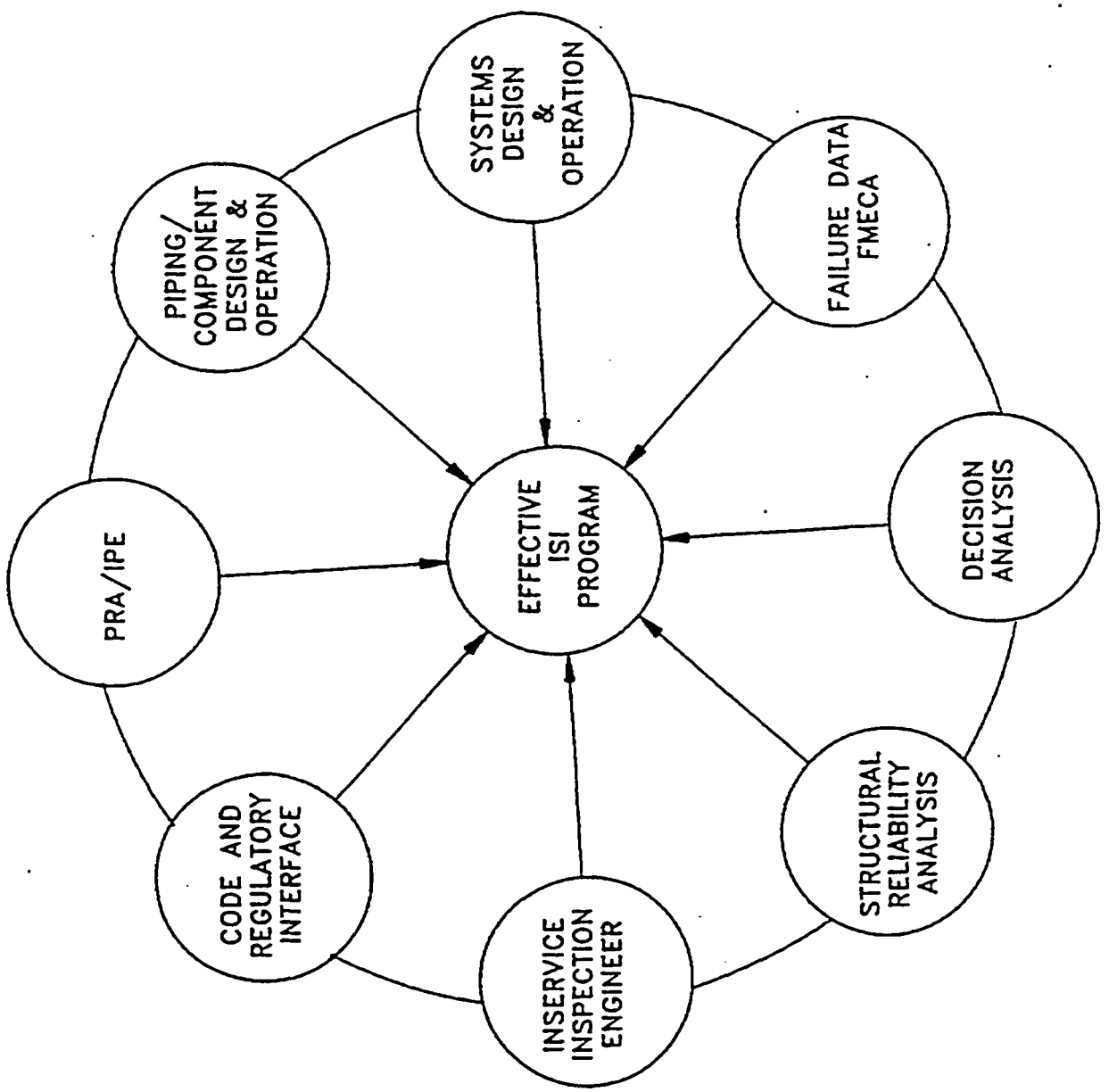

Figure 5-2 Required Skills for Risk-Informed Inspection

5.2 SEGMENT DEFINITION

This task involves the development of piping segments for the process. A piping segment is defined as a portion if piping for which a failure at any point in the segment results in the same consequence (e.g., loss of a system, loss of a pump train, etc.) and includes piping structural elements between major discontinuities such as pumps and valves.

5.3 CONSEQUENCE EVALUATION

The consequences given the failure of a piping segment are identified through PSA insights, engineering evaluations and plant design and operations. Consequences that must be considered include both direct effects (failure of a train in which the piping segment is contained) and indirect effects (such as those due to flooding, pipe whip, or jet impingement).

5.4 FAILURE PROBABILITY ESTIMATION

The overall process of identifying potential failure modes, selecting locations and calculating failure probabilities proceeds by system, and includes preliminary activities for the system as a whole, and detailed assessments and data gathering for each segment. This includes the following steps:

- Gather design basis information
- Review industry experience
- Discuss system operations with system engineer and gain further insights into any potential piping problems
- Determine likely failure mode(s)
- Select candidate location(s)
- Gather detailed data for probability of failure analysis

- Calculate probabilities of failure

- Document locations and probabilities

5.5 RISK EVALUATION

This task is to identify and categorize the components (or pipe segments). The approach calculates the relative importance for each component within the systems of interest. This risk-importance is based on the frequency of core damage (or LERF, if available) resulting from the structural failure of the component in a given segment and the total piping pressure boundary core damage frequency (and LERF, if available). The results are then used to calculate the risk-importance for each segment within the system.

The following outlines the steps of the process:

- Apply PSA to calculate piping pressure boundary core damage frequency (and LERF, if available)
  - Identify impact on PSA model (using EPRI PSA Applications Guide)
  - Identify surrogate component
  - Obtain conditional core damage frequency/probability (LERF)
  - Integrate pressure boundary failure probability/rate
  - Calculate segment piping pressure boundary core damage frequency (and LERF)
  - Calculate total piping pressure boundary core damage frequency (and LERF)
- Calculate importance measures
  - Calculate segment Risk Reduction Worth importance measure
  - Calculate segment Risk Achievement Worth measure
- Evaluate important PSA and failure probability factors through sensitivity studies and uncertainty studies, as appropriate

5.6 EXPERT PANEL CATEGORIZATION

An expert panel (such as the expert panel used for the Maintenance Rule) evaluates the risk-informed results and makes a final review to determine the high safety-significant pipe segments for ISI using the guidance in Section 3.6.3. The expert panel should:

- Consider the PSA and failure probability information and associated uncertainties
- Consider other deterministic considerations
  - Shutdown risk evaluation
  - External events evaluation
  - Other accident scenarios
  - Component operating history
  - Plant operation and maintenance insights
  - Design basis analysis
  - Other deterministic insights
- Conduct expert panel sessions and document results

5.7 STRUCTURAL ELEMENT SELECTION

The selection of inspection locations within each high safety-significant pipe segment is obtained by further review by a subpanel, comprised of materials, ISI and NDE expertise, using the following steps.

- Identify where the segment falls on the structural element matrix.
- Determine the number of inspections required in each segment using the statistical model, if appropriate.
- Verify that the locations with the highest failure potential within a segment are identified for examination.
- Document the results and present to the full expert panel for final review and approval.

The output of this process defines the structural elements selected and the associated examination method and frequency for inspection.

5.8 INSPECTION REQUIREMENTS

The inspection requirements defined in Section 4 should be consulted to define the type of inspection to be performed on the structural elements.

5.9 IMPLEMENTATION, MONITORING AND FEEDBACK

The implementation, monitoring and feedback is discussed in detail in Section 4 and summarized below.

Implementation

Once the risk-informed process is completed, the inspection program can be implemented. The required examinations are scheduled over the 10 year inspection interval in periods. If, during the interval, a reevaluation of the risk-informed process is conducted and scheduled items are no longer required, the items may be eliminated. If items are identified for inclusion in the program, the items should be added and distributed across the remaining periods in the interval. Each subsequent 10 year interval should include, as a minimum, a reevaluation of the risk-informed process.

For examinations that reveal flaws or relevant conditions exceeding ASME acceptance standards, additional examinations should be conducted. The additional examinations should include the same type of piping structural element(s) with the same postulated failure mode(s).

If piping structural elements are accepted for continued service, the areas containing flaws or relevant conditions should be reexamined during the next three inspection periods. If the reexaminations reveal that flaws or relevant conditions remain essentially unchanged for three successive inspection periods, the piping examination schedule may revert to the original schedule.

The examination qualification and methods requirements and personnel qualification requirements should be the same as under the plant's current inservice inspection program.

Feedback

The risk-informed inservice inspection program should be reevaluated periodically as new information becomes available. Such information may result for example from changes to the PSA, from inspection results, from new failure modes experienced by the industry, from replacement activities, from repair activities, or plant design or operational changes. The effect of the new information on the risk-informed process should be determined. Each phase of the risk-informed process should be reevaluated to determine where the new information impacts the process and/or the results. The new information should be included at the appropriate level of the analysis (consequence evaluation, failure probability estimation, etc.) and the analysis should be conducted to identify the changes to the risk-informed inspection program.

5.10 DOCUMENTATION

Each major step of the risk-informed ISI process should be documented for future use in retrievable files. Below is a list of information that may be included by an individual utility in their RI-ISI submittal to NRC. A list of information to be retained onsite for retrieval and potential NRC audit is also provided. The information to be retained is summarized in the previous sub-sections.

Proposed NRC Submittal Contents

- Current Inspection Code
- List of changes to licensing basis (relief requests, FSAR, etc.)
- Process followed (compliance with WCAP, Code Case and note exceptions to methodology)
- Justification for statement that PRA is of sufficient quality
- Summary of results of each step of the process, including summary of risk impact
- How meet RG principles
- RI-ISI Program Plan (summary of changes from current program such as shown in Table 4.4-2)

- Summary of any augmented inspections that would be impacted
- Performance monitoring/feedback/corrective action program changes/commitments
- Future reporting to NRC

Retrievable Onsite Documentation for Potential NRC Audit

- Scope Definition
- Segment definition
- Failure probability assessment
- Consequence evaluation
- PSA Model Runs for program
- Risk evaluation
- Structural element/NDE selection
- Change in risk calculations
- PRA Quality review
- Continual assessment forms as program changes based on inspection results, etc.
- ASME Code required documentation (including inspection personnel qualification, inspection results and flaw evaluations)

SECTION 6
SUMMARY AND CONCLUSIONS

6.1 REPORT SUMMARY AND RELATIONSHIP TO NRC RG-1.174

The risk-informed ISI process for piping is described in Sections 3 and 4. An earlier version of the above process had been applied to Millstone Unit 3, a plant designed to ASME Section III requirements, as a reference plant study and this work was reported in the original version of this Topical Report. The process has since been enhanced through benchmarking efforts in a WOG pilot application at Surry Unit 1, a pre-ASME Section III plant design, as reported in this revision of the Topical Report. While the process has been significantly enhanced to meet NRC regulatory guidance on use of probabilistic risk assessment to improve safety decisionmaking, both of these plant application studies yield consistent results.

This process meets the intent of the framework developed by the NRC and key steps and principles of the general regulatory guide and standard review plan (RG-1.174) as described in Sections 1.4 and 6.2.

6.2 SUMMARY OF RESULTS

After application of the risk evaluation process, including plant expert panel review, 96 pipe segments were shown to be high safety-significant at Millstone-3 and 117 pipe segments are shown to be in this category for Surry-1. In comparing the recommended piping structural elements to be inspected by non-destructive examination (NDE) in the risk-informed ISI program to the current ASME Section XI locations, a greater portion of the risk associated with piping pressure boundary failures can be addressed with the risk-informed program with far fewer examinations being required. At Millstone-3, the risk-informed program recommends 107 NDE examinations versus 753 ASME Section XI required exams, and for Surry-1, 137 NDE exams are suggested versus the 385 required by the ASME Code. Both studies show that examinations can be significantly reduced within the reactor coolant system, and examinations should be reallocated and added to other Class 2 and Class 3 systems, such as service water, auxiliary feedwater, and a few other systems based on the specific plant design. At Surry-1, 12 NDE exams are even recommended in the non-Code class portions of three systems. A

significant reduction in radiation exposure is also shown for both units with approximately 60-75 REM being saved each 10-year inspection interval.

This significant reduction in the number of examinations can be achieved while showing a risk reduction in total piping pressure boundary risk in terms of both core damage frequency and large, early release frequency, as demonstrated in detailed calculations performed for Surry-1. Even considering the impact of potential operator actions to recover from piping failure events does not change this positive result. In order to meet defense-in-depth principles and to maintain sufficient safety margins, some current reactor coolant loop piping examinations are kept in place and additional examinations are recommended in 10 low safety-significant segments at Surry-1 to maintain a risk neutral position in the front-line systems, such as containment spray and low head/high head safety injection, and in systems that are dominant contributors to the total piping pressure boundary risk. A statistical model has also been developed and applied to define the minimum number of locations to be examined to insure that an acceptable level of reliability is achieved, consistent with current industry experience, throughout the key piping segments of interest.

Consideration of the key principles, including defense-in-depth and adequate safety margins and uncertainties, have been considered in the risk-informed ISI process through several avenues:

- Piping segments are categorized into two categories (high and low safety significant) and thus require less accuracy than a full ranking.
- The consequence and risk evaluation consider the most bounding situation in terms of assuming no operator action to isolate the piping failure. In addition, conservative assumptions are made to model in the PSA the impact of indirect effects and the piping failures.
- The SRRA model considers uncertainties in inputs by allowing qualitative inputs in terms of ranges and the process allows for sensitivity studies to be conducted with the SRRA model.
- The piping CDF and LERF are determined and an attempt is made to maintain at least an overall risk neutral position.

- Additional piping inspection locations have been added for defense-in-depth in the front-line systems and also in systems that are the dominant contributors to the total piping pressure boundary risk.

- Sensitivity studies, including an uncertainty evaluation, are conducted on key aspects that impact the risk evaluation.

- The expert panel considered other plant deterministic information and tended to make decisions based on conservative assumptions.

- Even if the statistical model says that no inspection is required for a given set of high safety significant segments, a single sample will be inspected to ensure integrity.

- Pressure testing will still be performed for all piping within the scope of the RI-ISI program.

6.3 CONCLUSIONS

Implementation of risk-informed ISI programs using the process and methods provided in this WOG Topical Report will yield significant benefits in terms of enhanced safety, reduced radiation exposure, and reduced cost for nuclear plant piping programs. The studies have been independently performed for both plant applications and show that risk-informed ISI programs have the potential to be implemented at a cost that can be returned in one to two years, depending on the size and age of the unit, following implementation. Given that aging effects are directly evaluated in the process using a structural reliability/risk assessment tool, use of this technology for defining aging management programs and the associated inspection of piping systems as part of license renewal programs could yield additional significant benefits.

While the effort for this application focused on the use of risk-informed methods for the inservice inspection of piping, several insights have been obtained for possible application to other equipment. The process described and the steps can be applied to all types of components, such as vessels, tanks, heat exchangers, snubbers and other equipment addressed by ASME Section XI.

Finally, this report has demonstrated that a risk-informed piping ISI process has been created and can be implemented that satisfies the risk-informed regulation policy promulgated by the NRC. This includes demonstrated satisfaction of the principle elements of "Risk-Informed, Plant Specific Decisionmaking" and compliance with the five "Principles of Risk-Informed Regulation."

SECTION 7
REFERENCES

American Nuclear Society, "Design Basis For Protection of Light Water Nuclear Power Plants Against the Effects of Postulated Pipe Rupture," ANSI/ANS-58.2-1988, 1988.

American Society of Mechanical Engineers, ASME Boiler and Pressure Vessel Code, Section XI, Rules for Inservice Inspection of Nuclear Power Plant Components,1989 Edition, New York.

American Society of Mechanical Engineers, Boiler and Pressure Vessel Code, Code Case N-408-3, "Alternate Rules for Examination of Class 2 Piping Section XI, Division 1," August 9, 1993.

American Society of Mechanical Engineers, Boiler and Pressure Vessel Code, Code Case N-416-1, "Alternative Pressure Test Requirement for Welded Repairs or Installation of Replacement Items by Welding, Class 1, 2 and 3 Section XI, Division 1," February 15, 1994.

American Society of Mechanical Engineers, Boiler and Pressure Vessel Code, Code Case N-460, "Alternative Examination Coverage for Class 1 and Class 2 Welds, Section XI, Division 1," July 27,1988.

American Society of Mechanical Engineers, Boiler and Pressure Vessel Code, Code Case N-498-1, "Alternative Rules for 10-Year Hydrostatic Testing for Class 1, 2, and 3 Systems, Section XI, Division 1," May 11, 1994.

American Society of Mechanical Engineers, Boiler and Pressure Vessel Code, Code Case N-532, "Alternative Requirements to Repair and Replacement Documentation Requirements and Inservice Inspection Summary Report Preparation and Submission as Required by IWA-4000 and IWA-6000 Section XI, Division 1," December 12, 1994.

American Society of Mechanical Engineers, Boiler and Pressure Vessel Code, Code Case N-577, "Risk-Informed Requirements for Class 1, 2, and 3 Piping, Method A, Section XI, Division 1," September 2, 1997.

American Society of Mechanical Engineers, Boiler and Pressure Vessel Code, Code Case N-578, "Risk-Informed Requirements for Class 1, 2, and 3 Piping, Method B, Section XI, Division 1," September 2, 1997.

American Society of Mechanical Engineers, "Evaluation of Inservice Inspection Requirements for Class 1, Category B-J Pressure Retaining Welds in Piping," ASME Section XI Task Group on ISI Optimization, Report No. 92-01-01, Revision 1, July 1995.

American Society of Mechanical Engineers, "Risk-Based Inspection - Development of Guidelines, Volume 1, General Document," CRTD-Vol. 20-1, ASME Research Task Force on Risk-Based Inspection Guidelines, Washington, D.C., 1991.

American Society of Mechanical Engineers, "Risk-Based Inspection - Development of Guidelines, Volume 2-Part 1 and Volume 2-Part 2, Light Water Reactor (LWR) Nuclear Power Plant Components," CRTD-Vol. 20-2 and 20-4, ASME Research Task Force on Risk-Based Inspection Guidelines, Washington, D.C., 1992 and 1998.

American Society of Mechanical Engineers, "Risk-Based Inspection - Development of Guidelines, Volume 3, Fossil Fuel-Fired Electric Power Generating Station Applications, CRTD-Volume 20-3, ASME Research Task Force on Risk-Based Inspection Guidelines, Washington, D.C., 1994.

American Society of Mechanical Engineers, Standards and Guides for Operation and Maintenance of Nuclear Power Plants, Part 3, "Requirements for Preoperational and Initial Start-Up Vibration Testing of Nuclear Power Plant Piping Systems," 1990.

Bamford, W. H., "Technical Basis for Revision of Section XI, Appendix A Reference Fatigue Crack Growth Law for Water Environment," pp 433-442, ASME Journal of Pressure Vessel Technology, Vol. 102, 1980.

Bishop, B. A., "Final Report Documenting the Development of Piping Simplified Probabilistic Fracture Mechanics (SPFM) Models for EG&G Idaho, Inc.," October 1993.

Bishop, B. A., and Phillips, J. H., "Prioritizing Aged Piping For Inspection Using a Simple Probabilistic Structural Analysis Model," ASME Transactions of Pressure Vessel and Piping Conference, New York, 1993.

Bush, S. H., "Failure Rates in Nuclear Plant Piping Systems," pp 389-395, ASME Journal of Pressure Vessel Technology, Vol. 114, 1992.

Bush, S. H., "Statistics of Pressure Vessel and Piping Failures," ASME Journal of Pressure Vessel Technology, Vol. 110, August 1988, pp.225-233.

Chapman, O. J. V., and Davers, G. A., "Probability Risk Ranking," Transactions of the 9th International Conference on Structural Mechanics in Reactor Technology, Lausanne, 1987.

Chapman, O. J. V., Milner, R. T., and Baker, A. E., "Probability of Failure and Fatigue Life Monitoring for Life Extension," pp 53-57, Fatigue, Fracture and Risk - 1991, ASME PVP-Vol. 215, 1991.

Electric Power Research Institute, "PSA Applications Guide," EPRI TR-105396, 1995.

Electric Power Research Institute, "Toughness of Austenitic Stainless Steel Pipe Welds," Report NP-4768, 1986.

Gamble, R. M. and Tagart, S. W., Jr., "A Method to Assign Failure Rates for Piping Reliability Assessments," pp 3-12, Fatigue, Fracture and Risk - 1991, ASME PVP-Vol. 215, 1991.

Harris, D. O., et al., "Probabilistic Treatment of Stress Corrosion Cracking in 304 and 316NG PWR Piping Weldments," Lawrence Livermore National Laboratory, U.S. NRC Report NUREG/CR-4792, Vol. 3, 1986.

Harris, D. O., Lim, E. Y., and Dedhia, D. D., "Probability of Pipe Fracture in the Primary Coolant Loop of a PWR Plant, Vol. 5: Probabilistic Fracture Mechanics Analysis," U.S. Nuclear Regulatory Commission, NUREG/CR-2189, Volume 5, 1981.

Harris, D. O. and Dedhia, D. D., "Theoretical and User's Manual for pc-PRAISE, A Probabilistic Fracture Mechanics Computer Code for Piping Reliability Analysis," Lawrence Livermore National Laboratory, U.S. NRC Report NUREG/CR-5864, 1992.

Hazelton, W. S. and Koo, W. H., Technical Report on Material Selection and Processing Guidelines for BWR Coolant Pressure Boundary Piping, Report NUREG-0313, Rev. 2, U.S. Nuclear Regulatory Commission, 1988.

Jamali, K., "Pipe Failures in U.S. Commercial Nuclear Power Plants," EPRI TR-100380, Prepared for Northeast Utilities Service Company and the Electric Power Research Institute, Palo Alto, California, 1992.

Khaleel, M. A. and Simonen, F. A., "A Parametric Approach to Predicting the Effects of Fatigue on Piping Reliability," pp 95-107, Service Experience and Reliability Improvement: Nuclear, Fossil, and Petrochemical Plants, ASME PVP-Vol 288, 1994.

Lapay, W. S., Bishop, B. A. and Chay, S. C., "Reserve Strength as a Measure of Fragility," Proceedings of the Workshop on Seismic and Dynamic Fragility of Nuclear Plant Components, Brookhaven National Laboratory, U.S. NRC Report NUREG/CP-0070, 1985.

Mattu, R. K. et al., "Utility Response to NRC Bulletin 87-01, Thinning of Pipe Walls in Nuclear Power Plants," Report NP-6066, Electric Power Research Institute, 1988.

Mendler, O.J., "Method of Analysis and Evaluation of Jet Impingement Loads From Postulated Pipe Breaks," Westinghouse Electric Corporation, WCAP-8951, Revision 0, issued April 1979.

Meyer, M. A., and Booker, J. M., "Eliciting and Analyzing Expert Judgement," NUREG/CR-5424, Los Alamos National Laboratory, Los Alamos, New Mexico, 1989.

Nuclear Management and Resources Council[2] "Industry Guideline for Monitoring the Effectiveness of Maintenance at Nuclear Power Plants," NUMARC 93-01, 1993.

[2] The Nuclear Management and Resource Council (NUMARC) has since been integrated with other industry organizations to become the Nuclear Energy Institute (NEI).

Nuclear Management and Resources Council[2], "Guidelines For Optimizing Safety Benefits in Assuring the Performance of Motor-Operated Valves," NUMARC 93-05, 1993.

Palisade Corporation "@RISK, Risk Analysis and Simulation add-In for Lotus 1-2-3, Version 2.01 Users Guide," Newfield, NY, February 6, 1992.

Palisade Corporation, "Guide to Using @RISK," Windows Version, September, 1996.

Perdue, R. K., A Spreadsheet Model for the Evaluation of Statistical Confidence in Nuclear Inservice Inspection Plans, Westinghouse Science & Technology Center, Pittsburgh, Pennsylvania, June 24, 1997.

Phillips, J. H. et al., "Investigation of the Risk Significance of Passive Components Using PSA Techniques," pp 91-100, Fatigue, Fracture and Risk - 1992, ASME PVP-Vol. 241, 1992.

Shah, N. J., Buchert, D. M., McNeill, A., and Throckmorton, E. W., "Implementation of a Risk-Informed ISI Program at Surry Power Station," Risk-Informed Decision Making, pp 25-30, ASME PVP-Vol 358, New York, 1997.

SKI (Statens Karnkraft Inspektion), Swedish Nuclear Power Inspectomate, "Piping Failures in United States Nuclear Power Plants, 1961-1995, SKI Report 96:20, 1996.

Thomas, H. M., "Pipe and Vessel Failure Probability," Reliability Engineering 2, 1981, pp. 83-124.

U.S. Nuclear Regulatory Commission, Advisory Committee on Reactor Safeguards Probabilistic Risk Assessment Subcommittee Meeting, Rockville, Maryland, July 8, 1997.

U.S. Nuclear Regulatory Commission, Branch Technical Position MEB 3-1, " Postulated Rupture Locations in Fluid System Piping Inside and Outside Containment," Revision 2, June 1987.

U.S. Nuclear Regulatory Commission, Generic Letter 88-20, "Individual Plant Examination for Severe Accident Vulnerabilities," November 23, 1988.

U.S. Nuclear Regulatory Commission, Policy Issue (Information), "Proposed Agency-Wide Implementation Plan for Probabilistic Risk Assessment (PRA)," SECY-94-219, 1994.

U.S. Nuclear Regulatory Commission, Policy Issue (Notation Vote), "Final Policy Statement on the Use of Probabilistic Risk Assessment Methods in Nuclear Regulatory Activities," SECY-95-126, 1995.

U.S. Nuclear Regulatory Commission, Policy Statement on "Use of Probabilistic Risk Assessment Methods in Nuclear Regulatory Activities," (60 Federal Register (FR) 42622), August 16, 1995.

U.S. Nuclear Regulatory Commission, "Monitoring the Effectiveness of Maintenance at Nuclear Power Plants," Regulatory Guide 1.160, 1993.

U.S. Nuclear Regulatory Commission, "Requirements for Monitoring the Effectiveness of Maintenance at Nuclear Power Plants," U.S. Federal Register (56 Fed. Reg. 31324), 10 CFR 50.65, 1991.

U.S. Nuclear Regulatory Commission, "PRA Implementation Plan," SECY-97-076, April 3, 1997.

U.S. Nuclear Regulatory Commission, "Reactor Risk Reference Document," NUREG-1150, 1987.

U.S. Nuclear Regulatory Commission Letter, "Staff Evaluation of Millstone 3 Individual Plant Examination (IPE) - Internal Events, GL88-20 (Tac No. M74434)," Docket No. 50-423, May 5, 1992.

United States Nuclear Regulatory Commission, Regulatory Guide 1.147, "Inservice Inspection Code Case Acceptability ASME Section XI Division 1," Revision 11, October 1994.

Nuclear Regulatory Commission, Regulatory Guide 1.174, "An Approach for Using Probabilistic Risk Assessment in Risk-Informed Decisions on Plant-Specific Changes to the Current Licensing Basis," July 1998.

US Nuclear Regulatory Commission, Regulatory Guide 1.178, "An Approach for Plant-Specific, Risk-Informed Decisionmaking: Inservice Inspection of Piping," September 1998, issued for trial use.

Vo, T., Gore, B., Simonen, F., and Doctor, S., "A Pilot Application of Risk-Based Methods to Establish Inservice Inspection Priorities for Nuclear Components at Surry Unit 1 Nuclear Power Station," NUREG/CR-6181, Pacific Northwest Laboratory, Richland, Washington, August 1994.

Vo, T., Smith, B. W., Simonen, F. A., and Gore, B. F., "Feasibility of Developing Risk-Based Rankings of Pressure Boundary Systems for Inservice Inspection," NUREG/CR-6151, Pacific Northwest Laboratory, Richland, Washington, August 1994.

Westinghouse Systems Standards Design Criteria (SSDC) 1.19, "Criteria For Protection Against Dynamic Effects Resulting From Pipe Rupture," Revision 1, 1980.

Wheeler, T. A., Hora, S. C., Cramond, W. R., and Unwin, S. D., "Analysis of Core Damage Frequency from Internal Events: Expert Judgment Elicitation," NUREG/CR-4550, Volume 2, Sandia National Laboratories, Albuquerque, New Mexico, 1989.

Witt, F. J., "Development and Applications of Probabilistic Fracture Mechanics for Critical Nuclear Reactor Components," pp 55-70, Advances in Probabilistic Fracture Mechanics, ASME PVP-Vol. 92, 1984.

Woo, H. H. and Simonen, F. A. Simonen, "The Impact of Inservice Inspection on the Reliability of Nuclear Piping," pp 153-176, Advances in Probabilistic Fracture Mechanics, ASME PVP-Vol. 92, 1984.

Wright, R. E., Steverson, J. A., and Zuroff, W. F., "Pipe Break Frequency Estimation for Nuclear Power Plants," NUREG/CR-4407, Idaho National Laboratory, Idaho Falls, Idaho, 1984.

APPENDIX A
PLANT WALKDOWN INFORMATION

The appendix discusses the review of the plant hazards evaluation and the conduct of the plant walkdown to identify potential indirect effects from piping failure.

PRE-WALKDOWN EVALUATION

Millstone 3

The Millstone 3 Hazards Review Program Summary Sheets were reviewed for systems interactions due to postulated pipe breaks. The summary sheets examine the effects of spray wetting, flooding, temperature, pipe whip, jet impingement, rotating machinery, and pressure boundary ejected missiles. Because the risk-informed inspection program is concerned only with the effects due to pipe breaks and leaks, the rotating machinery and pressure boundary missiles evaluations were not reviewed. Note that the pressure boundary missiles are primarily from valves, which are not part of this program. In addition, Section 3.6 of the Millstone FSAR, "Protection Against Dynamic Effects Associated with the Postulated Ruptures of Piping," was reviewed. A summary of the review is provided in Table A-1.

The Hazards Evaluation examined the containment, the ESF building, the auxiliary building, the diesel generator building, the fuel building, the circulating and service water pumphouse, and the hydrogen recombiner building. Because only two cubicles in the circulating and service water pumphouse were mentioned in the Hazards Evaluation, it was decided to include the entire pumphouse in the walkdown. The turbine building was also included because the Hazards Evaluation did not address the building, and because of the amount of the high energy piping in the building.

Surry

The Surry analysis evaluated system interactions due to pipe ruptures. The internal flooding PSA was used in this evaluation to evaluate the potential for flooding and spray. For pipe whip and jet impingement, Chapter 14, Appendix B, of the Surry UFSAR was used which defined high energy lines as piping for which the maximum operating pressure exceeds 275 psig and

Table A-1
HAZARDS REVIEW SUMMARY FOR MILLSTONE 3

Item	Building	Cubicle/Area	Equipment / Pipe Segment	Indirect Effects	Consequences	Walkdown?	Shutdown?	Comments
1	ESF	001, 002, 021, 022	3FWA-004-126-3/128-3	Pipe Whip	Potential loss of "B" electrical division	No	No	Eval concludes no damage
2	ESF	003, 004, 005	FWA, SWP, CCP, RHS piping	Flooding	None	No	Yes	
3	ESF	006, 007, 008, 009, 019, 020	Moderate Energy Cracks	Temperature/ Humidity	Potential loss of equip for 1 RHS or SIH Train (same train/system as break)	No	No	
4	ESF	010	QSS-P1A/B	Flooding	Bounded by 12179-PR-1194	No	No	
5	ESF	011, 012, Rev. 1	FWA*P1B	Water Spray	Loss of Train "B" Equipment in cubicle	Yes	No	Check other equip in cubical
6	ESF	011, 012, Rev. 1	FWA*P1B	Jet Impingement	Cable trays 3TC7520, 3TC7610, TK7520 RHS*P1A cooling	No	Yes	Eval concludes no damage
7	ESF	013, 014	SW & CCW Piping	Flooding	Bounded by 12179-PR-1157	No	No	
8	ESF	013, 014	3FWA-004-126, -128	Pipe Whip	Could cause start of AFW TD pump	No	No	
9	ESF	015, 016, 017, 018	HVQ*ACUS1A/B & HVQ*SCUS2A/B	Water Spray	3EHS*MCC1A4 RHR operation	No	Yes	Eval. concludes no damage
10	AB1	23A, B, E	3CHS-003-8-2	Jet Impingement	3CHS-002-283-2	No	Maybe per T.S.	Letdown line damages seal return line

Table A-1 (cont.)
HAZARDS REVIEW SUMMARY FOR MILLSTONE 3

Item	Building	Cubicle/Area	Equipment / Pipe Segment	Indirect Effects	Consequences	Walkdown?	Shutdown?	Comments
11	AB-1	23C, 23D, 24, 25	30" SW	Flooding	Bounded by 12179-PR-1071	No	No	
12	AB-1	23F	30" SW	Flooding	Bounded by 12179-PR-1071	No	No	
13	AB-1	AB26, 27, 28, 89, 90, 99B, 112	-	-	-	-	-	No piping in risk-informed ISI scope
14	AB-1	33, 34, 35	CHS piping	Flooding	Bounded by 12179-PR-1071	No	No	
15	AB-1	29, 91 Rev. 1	-	-	-	-	-	No piping in risk-informed ISI scope
16	AB-2	86, 87, 88	3CCP*P1C/A	Water Spray	Two CCP Trains	Yes	Yes	Check for CCP pipe shroud
17	AB-2	36	3" CHS Letdown Exchanger Inlet Piping	Pipe Whip	6" CCP inlet or outlet lines	No	Yes	Eval concludes no damage
			3" CHS Letdown Exchanger Inlet Piping	Flooding	Bounded by 12179-PR-1071	No	No	
18	AB-2	38 thru 53, 55 thru 78	CHS piping	Pipe Whip	None - redundant trains in individual cubicles	No	No	
			3" CHS Letdown Exchanger Inlet Piping	Flooding	Bounded by 12179-PR-1071	No	No	
19	AB-2	54, 79, 80, 81	CHS piping	Pipe Whip	Redundant trains in individual cubicles	No	No	

Table A-1 (cont.)
HAZARDS REVIEW SUMMARY FOR MILLSTONE 3

Item	Building	Cubicle/Area	Equipment / Pipe Segment	Indirect Effects	Consequences	Walkdown?	Shutdown?	Comments
20	AB-2	92, 93, 94	CHS alt. mini-flow piping	Jet Impingement	One service water train	No	No	
21	AB-2	30, 31, 32, 95, 96, 97	-	-	-	-	-	No piping in risk-informed ISI scope
22	AB-2	98 Rev. 1	CCP Piping	Flooding	Bounded by 12179-PR-1071	No	Maybe, per TS	
23	EGE	175 - 181 Rev. 1	Service Water	Flooding	Bounded by 12179-PR-1073 Loss of single Generator Train	No	Maybe, per TS	
24	HR	182 - 187 Rev. 1	-	-	-	-	-	No piping in risk-informed ISI scope
25	FB	188, 197, 198	SFC, FPW, CCP Piping	Flooding	Bounded by 12179-PR-1038	No	No	
26	FB	191	CCP, FPW piping	Flooding	Bounded by 12179-PR-1038	No	No	
27	FB	194	SFC pump discharge	Water Spray	Bounded by 12179-NMS-793-DM	No	No	
28	FB	195, 196, 200	SFC piping	Flooding	Bounded by 12179-PR-1038	No	No	
29	CW	201, 202 Rev. 1	SW Pump Discharge Piping	Water Spray	Loss of single electrical train 3EJS*US1A due to spray on 3EHS*MCC1A5 or 3EHS*MCC1B5	Yes	Yes	

Table A-1 (cont.)
HAZARDS REVIEW SUMMARY FOR MILLSTONE 3

Item	Building	Cubicle/Area	Equipment / Pipe Segment	Indirect Effects	Consequences	Walkdown?	Shutdown?	Comments
30	AB-3	99A	SW Piping, 3SWP*P3A suction or discharge	Water Spray	3SWP*P3A suction or discharge spray on 3SWP*P3B	No	Maybe, per TS	SW pumps are drip protected; No consequential damage
31	AB-3	99C, 110, 111	CCP piping	Water Spray	None	No	Maybe per TS	
32	AB-3	99D	CHS piping	Water Spray	None	No	No	
33	AB-3	100, 118 - 121	-	-	-	-	-	No piping in risk-informed ISI scope
34	AB-3	101, 102	CCP piping	Water Spray	None	No	No	
35	AB-3	103 - 109	CCP piping	Water Spray	None	No	No	
36	AB-3	113 - 117	CHS, SWP piping	Water Spray, Flooding	None	No	No	
37	AB-3	Elev. 66'-6"	-	-	-	-	-	Hazards addressed are for fans in systems outside risk-informed ISI scope
38	CS-1	131A - F, 132A - H, 138	Moderate energy cracks in all piping	Flooding	Bounded by 12179-NS(B)-249	No	No	
39	CS-1	133A, 133B, 135, 142A, 144	3RCS-003-171-1	Pipe Whip	Conduit damage resulting in closing letdown and isolation valves	No	Yes	Break postulated to isolate itself due to valve closure
40	CS-1	133C, D Rev. 1	3-CHS-003-662-2	Jet Impingement	Seal Water return line 3-CHS-002-618-2	No	No	

Table A-1 (cont.)
HAZARDS REVIEW SUMMARY FOR MILLSTONE 3

Item	Building	Cubicle/Area	Equipment / Pipe Segment	Indirect Effects	Consequences	Walkdown?	Shutdown?	Comments
41	CS-1	134A - F Rev. 1	3-CHS-025-304-2	Jet Impingement	Seal Water return line 3-CHS-002-618-2	No	No	Note event description for BDG line breaks
42	CS-1	136 Rev. 1	RCS piping	Jet Impingement	Bounded by 12179-NSB-177	No	Yes	
43	CS-2	137 Rev. 2	RCS piping	Pipe Whip/Jet Impinge.	Bounded by 12179-NSB-177	No	Yes	
44	CS-2	139, 146 Rev. 2	RCS piping	Pipe Whip/Jet Impinge.	Bounded by various calcs	No	Yes	
45	CS-2	140 Rev. 2	RCS Piping	Pipe Whip/Jet Impinge.	Bounded by various calcs	No	Yes	
46	CS-2	141 Rev. 1	RCS piping	Pipe Whip/Jet Impinge.	Bounded by various calcs	No	Yes	
47	CS-2	142B - F	FWS, MSS, FWA piping	Pipe Whip/Jet Impinge.	Bounded by various calcs	No	Yes	
48	CS-2	145A - F, 143, 147	Intermediate Break in 30" MSS line at upstream elbow	Axial Jet	Loss of conduits results in loss of radiation monitors, 3RMS*RIY05 & 3RMS*RIY42 and loss of power to 3RMS*RM42	No	No	
			Intermediate Break in 30" MSS line at downstream elbow	Radial Jet	Loss of one MSS line to FWA TD pump	No	Yes	

the maximum temperature equals or exceeds 200°F. Generally, in this analysis, the impact of ruptures in piping operating at these conditions is evaluated by walking down the areas of interest.

Initially, the plant was divided into areas corresponding to the fire areas defined within the plants 10CFR50 Appendix R report. The following areas were reviewed for indirect effects.

- Auxiliary Building
- Main Steam Valve House And Safeguards Area
- Service Building
- Mechanical Equipment Room No. 4 (Charging Pump/SW Pump Room)
- Containment
- Turbine Building
- Mechanical Equipment Room #5
- Emergency Service Water Room

An example of the documentation is provided in Table A-2. It concludes that the component cooling pumps and the charging pumps would be lost if no action was taken to isolate the ruptured line.

WALKDOWN

Millstone 3

The Millstone 3 walkdown was performed and included members from the PRA, piping, and operations groups at Northeast Utilities, and members of risk and structural reliability groups at Westinghouse. The walkdown covered the specific areas listed in Table A-1 in the ESF building and the auxiliary building. The walkdown also included all of the circulating and service water pumphouse and the turbine building. Two of the walkdown worksheets documenting the information gathered are presented in Tables A-3 and A-4.

Table A-2
SURRY HAZARD REVIEW SUMMARY FOR THE AUXILIARY BUILDING

Item	Building/ Area	Equipment/ Segment	Indirect Effect	Consequences	Walkdown/ Shutdown	Comments
1	AB/17-1A	Low head to high head recirc. lines	Flooding & Spray	1. Loss of CH pump 1A, if isolated 2. Loss of CC and CH pumps if not isolated	Yes/No	During normal operation these headers are isolated. CC pumps are located in the general area of the AB (17-AB)
2	AB/17-1A	Charging pumps & RWST supply lines	Flooding & Spray	Same as item 1.	Yes/No	See comment for item 1
3	AB/17-1B	Low head to high head recirc. lines	Flooding & Spray	1. Loss of CH pump 1B if isolated 2. Loss of CC and CH pumps if not isolated	Yes/No	See comment for item 1
4	AB/17-1B	Charging pumps & RWST supply lines	Flooding & Spray	Same as item 3	Yes/No	See comment for item 1
5	AB/17-1C	Low head to high head recirc. lines	Flooding & Spray	1. Loss of CH pump 1C pump if isolated 2. Loss of CC and CH pumps if not isolated	Yes/No	See comment for item 1
6	AB/17-1C	Charging pumps & RWST supply lines	Flooding & Spray/Jet Impingement	Same as item 5.	Yes/No	The RWST isolation valves are located in this area. CC pumps are located in area 17-AB
7	AB/17-AB	Fire Protection lines	Flooding & Spray	1. None if flooding is terminated 2. Loss of CC and CH pumps if flooding is not terminated	Yes/No	Water spray does not have the potential to disable more than one CC pump due to the small size of the fire protection header and relative location of the pipes and CC pumps

Table A-2 (cont.) SURRY HAZARD REVIEW SUMMARY FOR THE AUXILIARY BUILDING						
Item	Building/ Area	Equipment/ Segment	Indirect Effect	Consequences	Walkdown/ Shutdown	Comments
8	AB/17-AB	Charging pumps & RWST supply lines	Flooding & Spray/Jet Impingement	1. None if flooding is terminated 2. Loss of CC and CH pumps if flooding is not terminated	Yes/No	See Comment for item 7.
9	AB/17-AB	4"-SLPD-50 and 6"-SA-21	Spray	1A and 1B CC pumps	Yes/Yes	
10	AB/17-AB	4"-SLPD-50	Jet Impingement	1A/B/C CC pumps and 1C Charging pump	Yes/Yes	This is a conservative estimate
11	AB/17-AB	3"-WGCB-3-601	Pipe Whip	Rupture 2"-CH-90-1503	Yes/Yes	Postulated break is in the horizontal run shown on FP-206AE Sec. 9-9 just to the right of column line TN-5.
12	AB/17-AB	3"-WGCB-1-601	Pipe Whip	Rupture 2"-CH-8-1503	Yes/Yes	Postulated break is in the horizontal run shown on FP-206A quadrant F4 and detached plan A.
13	AB/17-AB	3"-WGCB-2-601	Pipe Whip	Rupture 3"-CC-74-151 and 2-ACC-73-21B	Yes/Yes	Postulated break is in the vertical run shown on FP-206AD.

Table A-3
MILLSTONE 3 RISK-INFORMED INSPECTION
INDIRECT EFFECTS WALKDOWN WORKSHEET

Item #: 5 Building: ESF

Cubicle/Area: 011 Elevation: 21" - 6"

Indirect Effect of Concern: Loss of Train A equipment due to any pipe rupture in area (aux. feedwater suction or discharge piping), including a CCP pipe.

Components/Equipment in Cubicle/Area					
System	Comp. Type	Tag No.	Train	Needed for Safe Shutdown?	Support System?
FWA	Pump	3FWA*P1A	A	Y	N
FWA	Valve	3FWA*HV31D[1]	A	Y	N
FWA	Valve	3FWA*HV31A[1]	A	Y	N
FWA	Valve	3FWA*V4[2]	A	Y	N
FWA	Valve	3FWA*AV61A[3]	A	Y	N
FWA	Valve	3FWA*AV23A[3]	A	Y	N
FWA	Valve	3FWA*HV31CB[4]	B	Y	N
FWA	Valve	3FWA*HV31C[4]	B	Y	N
FWA	Valve	3FWA*AV62B[4]	B	Y	N

1. Located at far side of room from unisolable break
2. Near pump
3. Located at postulated break location
4. Located at far end of room away pump and postulated break

Comments

Cable tray numbers listed in Hazards Evaluation did not match those marked on the overhead trays in the room. Additional checks needed.

Conclusions

Apparent discrepancy with cable tray identifiers noted. Hazards Evaluation concludes pipe break will not target cable trays, but should further investigate effects of losing cable tray. No additional interactions found. Train B valves located away from postulated break locations. Pipe break will only affect FWA Train A. Need to consider the CCP interaction for inclusion in the segments analyzed.

Table A-4
MILLSTONE 3 RISK-INFORMED INSPECTION
INDIRECT EFFECTS WALKDOWN WORKSHEET

Item #: N/A

Building: Turbine

Cubicle/Area:

Elevation: 14' - 6"

Indirect Effect of Concern:

Components/Equipment in Cubicle/Area					
System	Comp. Type	Tag No.	Train	Needed for Safe Shutdown?	Support System?
IAS	Compressor	3IAS-C1A	-	N	Y
IAS	Compressor	3IAS-C1B	-	N	Y
SAS	Compressor	3SAS-C1	-	N	Y

Comments

The three compressors are located side by side near the condensate pump discharge header. A break in the header could potentially fail all three compressors which would cause a reactor trip.

Conclusions

Needs to be considered along with other possible breaks in turbine building.

Surry

The Surry walkdown was performed and included members from the PRA, ISI, structural mechanics and operations groups at Virginia Power and members of the PRA and piping groups at Westinghouse. The walkdown covered the specific areas identified below:

- Main Steam Valve House
- Charging Pump Cubicles
- Service Building
- Turbine Building
- Aux Building Near Elevator and Boric Acid Storage Tanks

An example of the walkdown worksheets documenting the information gathered is shown in Table A-5.

The summary of the indirect effects identified for Surry is provided in section 3.4.2.

INSIGHTS FROM THE WALKDOWN FOR MILLSTONE 3

The following summarizes the insights from the Millstone 3 plant walkdown for the various areas investigated.

Auxiliary Feedwater System

There were numerous valves near the discharge of the motor auxiliary feedwater pump. An AFW piping failure could disable some of these valves, but the effect would still be a loss of one train. Two concerns noted were the spray onto overhead cable trays, and a postulated reactor plant component cooling water (CCP) break which targets the AFW pump and some valve controllers. These sections of piping were not in the original program scope for CCP. Based on the interaction possibility with the AFW system, two CCP segments were added for risk evaluation and the cable trays were investigated for their effects. (Table A-1 Item 5)

Table A-5 SURRY UNIT 1 INDIRECT EFFECTS WALKDOWN WORKSHEET		
Building: 17 (AB)	**Elevation: 2'-13'**	**Cubicle/Section: 17-1A** (Charging Pump 1A Cubicle)
Potential Hazards		**Postulated Effect**
Flooding/Spray Source(s) Charging pump supply and discharge lines.		No concerns were identified during the walkdown.
High Temperature/Humidity Sources (High Energy Lines only) No source was identified.		
Pipe Whip Source(s) (High Energy Lines only) Break in Charging Pump Recirculation line		Failure of 1-CH-MOV-1267A and 1-CH-MOV-1275A. (See note 2 and 3)
Jet Impingement Source(s) (High Energy Lines only) Charging pump discharge line		None was identified.

Comments:

1. Can RWST drain if the recirculation line is broken? No. The recirculation line is not connected to the RWST.
2. Because the Recirculation line is smaller than the postulated targets, the target piping and MOVs are assumed to maintain structural integrity. The operators on the MOVs are assumed to fail such that the MOVs cannot change position (i.e., MOVs are assumed to fail "as is".)
3. The Surry UFSAR does not consider pipe whip in this location because the maximum operating temperature of the fluid is less than 200°F.

Conclusions/Actions:

The walkdown did not identify any indirect effects.

Table A-5 (cont.) SURRY UNIT 1 INDIRECT EFFECT WALKDOWN WORKSHEET				
Building: Aux. Building			Area/Sec.: 17-1A (Charging Pump 1A Cubicle)	
Potential Targets in The Area				
System	Component Type	Tag Number	Train	Needed for Shutdown?
CH/HHSI	Pump	1-CH-P-1A	A	Yes
SW	Temp. Control Valve	1-SW-TCV-108A	A	Yes
CH/HHSI	MOV	1-CH-MOV-1275A	A	Yes
CH/HHSI	MOV	1-CH-MOV-1287A	A	Yes
CH/HHSI	MOV	1-CH-MOV-1267A	A	Yes
CH/HHSI	MOD	1-VS-MOD-101A	A	Yes
CH/HHSI	MOV	1-CH-MOV-1286A	A	Yes
CH/HHSI	MOV	1-CH-MOV-1267B	A	Yes

Component Cooling Water

It was verified that pipe shrouds had been placed on the discharge piping of CCP pumps 3CCP*P1A and P1C. These shrouds were placed to mitigate the interactions of a break in one train disabling the pump in the other train (as noted in the Hazards Evaluation). No other unique interactions were noted for these areas. (Table A-1 Item 16)

Service Water

There are vital and non-vital motor control centers (MCCs) in the service water pump cubicles. Large drains were noted in each cubicle to prevent flooding problems. The implications of a pipe break spraying on the MCCs was noted for further review. (Table A-1 Item 29) (Note: the expert panel considered this and decided to not take credit for drains and considered this as an indirect effect.)

Turbine Building

The walkdown of the turbine building resulted in several areas needing further consideration for the PSA modeling. The turbine building component cooling water has a small surge tank and virtually any pipe break/leak will eventually fail the system which will lead to reactor trip. The three plant air compressors are located side by side near the condensate pump discharge header. A postulated break in the header could potentially fail all three compressors which would cause a reactor trip. The location of the motor driven and 2 turbine driven pumps makes the system susceptible to losing all pumps due to a pipe break.

It is important to note that the indirect effects discussed here are plant specific. Due to plant layout differences, the contribution of the indirect effects can vary significantly between different plants. It is expected that earlier vintage plants will be impacted more by indirect effects than later vintage plants.

For the reference plant, the most significant indirect effects were associated with Service Water segments SWP-15, SWP-22, and SWP-26 through -29. Segments SWP-15 and SWP-22 are Service Water to the CCE heat-exchangers. It was assumed by the plant expert panel that a pipe failure in either of these segments would result in a loss of both CCE trains due to their close

proximity. A loss of all CCE results in a total loss of charging and therefore the segment was determined to be high safety-significant. The indirect effects resulting from these pipe segment failures significantly changed the calculated CDF contributions. Failure of all charging results in a reactor trip as well as failure to provide its accident mitigating functions. However, failure of one train of charging was not considered to result in a reactor trip and the other train is available for accident mitigation. This piping segment would have been categorized low safety-significant due to failure of one train of CCE if indirect effects were not considered. Piping segments SWP-26 through-29 represent Service Water from the pump to the discharge check valve. A failure in any of these segments would flood the entire room resulting in a loss of the Service Water Train involved, including an MCC associated with it. Without considering the indirect effects, any one of the segments would fail one pump in a pump train. These segments were designated as high safety-significant based the importance of Service Water at shutdown. The loss of an operating Service Water train would result in a loss of the operating RHR, a charging train and a Diesel Generator.

All other indirect effects identified in Table 3.4-3 did not contribute to the determination of the segment safety significance category. Segments CCP-13 and CCP-14 disable one train of AFW which was determined to be low safety-significant. Failures in the Auxiliary Feedwater piping segments cause failures of HVAC which did not contribute to the segment categorization. The indirect effect associated piping segments SWP-1 through -4 is room flooding resulting in a loss of the entire pump train and failure of a MCC associated with the Service Water train. However, without considering indirect effects, a failure in these segments would result in failure of a Service Water train because the other pump in the train would back feed through the break. Therefore, if indirect effects were not considered, these segments would still result in a loss of an entire Service Water train, which was determined to be high safety-significant. Segment SWP-13 fails cooling water to the RHR and RSS ventilation units and spray would result in a loss of an MCC which powers valves needed for the train of RSS which is supported by the ventilation unit. This scenario had a low consequence and was determined to be low safety-significant. Segment SWP-20 is similar to segment SWP-13.

With regard to inspection locations, a piping segment location that was important from an indirect effects standpoint would be selected for inspection above other piping segment locations where the direct and/or indirect effect was less severe.

APPENDIX B

SAMPLE EXPERT PANEL WORKSHEETS

Contained in this appendix are sample segment worksheets which were used by the expert panel review for Millstone and Surry. Section 6 of the worksheet contains the final safety-significance category (high or low safety-significant) determined by the expert panel. Below is a brief summary of the segments represented by the worksheets for Millstone and Surry.

Millstone 3

FWS-1: This segment is the main feedwater piping to steam generator A, between motor-operated valve 35A and gate valve FCV 510. A break in this line causes a loss of main feedwater (feedline break), modeled in the PSA as an initiating event. The calculated full break probability is 0 (1.0E-08 was assumed). The RRW value calculated is 1.00 and the RAW value is relatively low. The segment was designated low safety-significant because of the low failure probability and the relatively low consequence.

ECCS-1: This segment is one of the four safety injection lines and it is located between check valves 8818A and 8819A and 8847A (inside containment). A break in this line causes a partial loss of injection, and the eventual loss of the RWST inside containment. The calculated full break probability is 0 (1.0E-08 was assumed). The RRW and RAW values were relatively high, however, the expert panel believed the PSA modeling was too conservative because the RWST inventory would be available for recirculation. The time to switch to recirculation would however be shorter. This segment was designated low safety-significant because of the low failure probability and the expert panel's assessment that the consequence would be lower than calculated.

RCS-7: This segment is the safety injection line from check valve 8948A to the tee on the loop A cold leg. A break in this segment causes a large LOCA, modeled in the PSA as an initiating event. The calculated full break probability is 4.1E-09 (the threshold value of 1.0E-08 was used). The RRW value calculated is 1.00 but the RAW value is relatively high. The segment was designated high safety-significant due to the relatively high RAW value and because of the high consequence of a large LOCA.

RCS-15: This segment is the high pressure safety injection connection from the cold leg tee to check valve 8900B. A break in this segment causes a small LOCA, modeled in the PSA as an initiating event. The calculated full break probability is 1.5E-12 (1.0E-08 was assumed). The RRW value calculated is 1.00 but the RAW value is relatively high. The segment was designated high safety-significant due to the relatively high RAW value and because the pipe failure results in an unisolable break in the RCS.

SIL-9: This segment is from accumulator TK1A to check valve 8956A. A break in this line results in the loss of accumulator TK1A. The calculated full break probability is 0 (1.0E-08 was assumed). The RRW value is 1.00 and the RAW is in a medium range. This segment was designated low safety-significant due to the low failure probability, benign normal operating conditions, and low consequence.

SIH-4: This segment is the High Pressure Safety Injection line from motor operated valves 8821A and 8821B to check valves 8819C, 8819A, 8819D, and 8819B. A break in this segment causes a loss of the RWST outside containment. The calculated full break probability is 0 (the threshold value of 1.0E-08 was used for calculations). The RRW and RAW values are relatively high, therefore the segment was designated high safety-significant.

FWA-12: This segment is the Auxiliary Feedwater line from check valve V12 and V47 to the cavitating venture before Steam Generator D. A break in this line causes an eventual loss of the DOST. The calculated full break probability is 0 (the threshold value of 1.0E-08 was used for calculations). The RRW and RAW values are relatively high, therefore the segment was designated high safety-significant.

SIL-3: This segment is the Low Pressure Safety Injection from motor operated valves 8716A and 8716B to V8735 and motor operated valve 8840. A break in this segment causes a loss of the RWST outside containment. The calculated full break probability is 0 (the threshold valve of 1.0E-08 was used for calculations). The RRW and RAW values are relatively high, therefore the segment was designated high safety-significant.

Surry Examples

ECC-3: This segment is the cold leg loop piping between check valves 1-SI-243 (from low head injection) and 1-SI-237 (from high head injection) and discharge check valve 1-SI-85 (to RCS). A piping failure in this line causes a loss of RWST inside containment (this would only cause a shorter time to switchover of recirculation) and the loss of one injection path to the RCS cold leg because flow restrictors on the injection path limit flow. The PSA model already assumes for LOCA events the loss of one cold leg injection path; therefore, there was no postulated conditional core damage. The failure mechanism postulated was thermal stratification while resulted in relatively low failure probabilities from small leak and large leak. This segment was designated as high safety-significant by the expert panel due to the piping possible being pressurized from the RCS and would also be a common mode failure of one of the low head and high head injection systems flowpath.

FW-12: This segment is the main feedwater piping header to steam generator A. A piping failure in this line is postulated to result in a loss of both main feedwater pumps and cause a loss of main feedwater initiating event. Indirect effects would also result from failure of this line due to spray and flooding and cause a loss of all three Unit 1 AFW pumps, the loss of both Unit 1 containment spray pumps and the loss of three main steam relief valves. These consequences were treated as 1) an initiating event with failure of mitigating equipment and 2) failure of mitigating equipment. The RRW for core damage frequency with operator action was 1.04 (high safety significant) and the RRW for LERF with operation action was 1.008 (high safety significant). The failure mechanism assumed was wastage which resulted in high failure probabilities for small and large leak. The segment is in an augmented program and therefore a factor of 10 reduction is the failure probabilities was assumed. The expert panel concurred that this segment was high safety significant.

HHI-4C: The piping segment is located at the discharge of charging pump A between a check valve and two motor-operated valves. A piping failure in this segment is assessed to result in the loss of RWST outside containment in addition to the loss of the Unit 2's RWST and charging pump cross connects. The postulated indirect consequences are not more severe than the direct impact but was also assessed numerically. With operator action, the segment can be isolated and this results in the loss of one charging pump. The postulated failure mechanism was that a

snubber locks up under thermal conditions; yet the failure probability remained relatively low. The expert panel assessed this segment as high safety significant because high head flow would be temporarily interrupted before the operator took action and because of the potential for a common mode failure of all charging pumps.

LHI-4: This segment is one of the low head safety injection system=s suction line from the containment sump to the first motor-operated valve for LHI pump A. A piping failure in this segment is assessed to result in the loss of recirculation from LHI A path. Fatigue was postulated as the failure mechanism and resulted in relatively low failure probabilities. The importance measures indicated this segment as low safety significant. The panel was concerned that this line had a single containment isolation valve and is an extension of the containment sump. The panel designated this segment as high safety significant.

RC-16: This piping segment is the safety injection line from the first isolation check valve to the RCS loop 1 hot leg. This segment was postulated to result in a large, medium or small LOCA depending on the leak size. Thermal striping/stratification and thermal fatigue was the postulated failure mechanism for this segment. This segment was found to be numerically high risk significant (CDF with operator action). The segment provides hot leg safety injection water. The panel noted that the failure mechanism postulated (thermal striping) had occurred in the industry, though on the cold leg safety injection lines. The panel voted unanimously each segment high safety significant.

RC- 58: This piping segment is from PORV block valve to pressurizer PORV. Failure of this segment was postulated to result in a medium or small LOCA depending on leak size. Closure of the block valve would terminate the event and reduce the consequences. The failure mechanism postulated was fatigue. The concern was raised regarding the loss of cold overpressure mitigation capability during shutdown. The panel was concerned with high stress to allowable stress ratios. The panel voted unanimously to make the segment high safety significant.

SW-4: This piping segment is from the discharge of service water pump A through the diesel cooler and shaft bearing oil cooler back to the intake structure. As a direct impact, a rupture in any one of these segments is assessed to result in the loss of one of three SW pumps. As an

indirect consequence, failure of any one of these segments is assessed to result in the loss of all SW pumps. The postulated failure mechanism was wastage which results in a high failure probability. The RRW for the CDF with operator action showed this segment to be high safety significant. The expert panel identified that fiberglass failures had occurred at the plant and with a high RRW, the panel identified this segment as high safety significant.

MILLSTONE 3
EXPERT PANEL EVALUATION
SEGMENT RANKING WORKSHEET

Section 1 System & Pipe Segment Identification		
System & Segment Description:	FWS-1 Main Feedwater/Condensate System From motor valve MOV-35A(V14) to gate valve FCV-510(V15)	
Location/P&ID Drawing:	E-130C	
System Function(s):	Provides feedwater to steam generators	

Section 2 Risk Ranking Information		
Failure Effect on System Without Operator Action:	Loss of main feedwater flow to steam generator A	
Failure Effect on System With Operator Action:	Loss of main feedwater flow to steam generator A	
PSA Initiating Events Impact:	Loss of Main Feedwater	
PSA Containment Performance Impact:	None	
Conditional Core Damage Frequency	Without O	With O
Due to Pressure Boundary Failure	1.20E-06	1.20E-06
Total Pressure Boundary Failure Core Damage Frequency (FP*CDFcod)	3.00E-16	3.00E-16
CDF_p Importance Measure Values	RAW 5.38 RRW 1.000	106 1.000
Comments:		

Section 3 Pressure Boundary Failure Probability		
Segment Elements (welds, tees, elbows, etc.):	Pipe to valve V14 weld .	
Pressure Boundary Failure Mechanism(s):	Thermal fatigue, erosion/corrosion	
Pressure Boundary Leak Probability:	Small Leak: Full Break :	1.1E-03 0 (use 1.0E-08)
Basis for Pressure Boundary Failure Probability:	High temperature at pipe weld, large nominal pipe size, high normal operating pressure	
Comments:	Break exclusion zone. No E tending LO 040-016 US	

MILLSTONE 3
EXPERT PANEL EVALUATION
SEGMENT RANKING WORKSHEET

Segment: FWS-1 (Sheet 2)

Section 4 Indirect Effects Evaluation	
Indirect Effect (Spray, flood, pipe whip, jet impingement)	None identified
Pressure Boundary Failure Impact on Other Systems	None identified
Core Damage Frequency Contribution due to Indirect Effects	None

Section 5 Other Considerations		
External Events Evaluation		
Seismic:	Fire:	External Flood:
Shutdown Risk Evaluation	Feedline break during cooldown. No impact at shutdown.	
Importance to Other Accident Scenarios		
Component Maintenance and Operation Insights:	Review of reports conducted, no major problems found	
Importance to Design Basis Analysis:	Decrease in heat removal by the secondary system, per FSAR Chapter 15.	
Other Deterministic Insights:		

Section 6 Final Risk Category			
Category:	High Safety Significant	Low Safety Significant	X
Basis	Low failure probability, relatively low consequence - loss of MFW		

MILLSTONE 3
EXPERT PANEL EVALUATION
SEGMENT RANKING WORKSHEET

Section 1 System & Pipe Segment Identification	
System & Segment Description:	ECCS-1 Emergency Core Cooling System From CV8819C (V24) and CV8818C (V13) to CV8847C (V985)
Location/P&ID Drawing:	EM-112A, 112B & 113B
System Function(s):	Provides water from the RWST and the containment sump for core cooling during a LOCA

Section 2 Risk Ranking Information		
Failure Effect on System Without Operator Action:	Loss of RWST inside containment	
Failure Effect on System With Operator Action:	Loss of all RHR & HPSI flow	
PSA Initiating Events Impact:	None	
PSA Containment Performance Impact:	None	
Conditional Core Damage Frequency due to Pressure Boundary Failure:	Without OA 4.73E-02* (3.00E-04)	With OA 2.09E-03
Total Segment Pressure Boundary Failure Core Damage Frequency ($FP*CDF_{cond}$):	4.73E-10* (3.00E-12)	2.09E-11
CDF_{pb} Importance Measure Values:	RAW 1.50E+05* (1.32E+4) RRW 1.002* (1.00)	1.83E+05 1.002
Comments:	*Based on Expert Panel discussion, the consequence is much less than this – will be requantified (shown in parentheses) – would result in draindown of RWST and earlier transfer to recirc.	

Section 3 Pressure Boundary Failure Probability	
Segment Elements (welds, tees, elbows, etc.):	Weld at V985
Pressure Boundary Failure Mechanism(s):	Thermal fatigue
Pressure Boundary Failure Probability:	Small Leak: 0 (use 1.0E-08 per demand) Full Break: 0 (use 1.0E-08 per demand)
Basis for Pressure Boundary Failure Probability:	High normal operating pressure, Maximum residual stress level, High fatigue transient frequency
Comments:	Valve is located on branch line within 2 feet of run pipe connection; Many nearby branch line snubbers exist which potentially may lockup causing break potential

MILLSTONE 3
EXPERT PANEL EVALUATION
SEGMENT RANKING WORKSHEET

Segment: ECCS - 1 (Sheet 2)

Section 4 Indirect Effects Evaluation	
Indirect Effect: (Spray, flood, pipe whip, jet impingement)	None Identified
Pressure Boundary Failure Impact on Other Systems:	None identified
Core Damage Frequency Contribution due to Indirect Effects:	None

Section 5 Other Considerations		
External Events Evaluation Seismic:	Fire:	External Flood:
Shutdown Risk Evaluation:	Failure results in possible reduced flow for emergency core cooling; loss of RHR flow and LOCA during shutdown if RHR is not isolated	
Importance to Other Accident Scenarios:		
Component Maintenance and Operation Insights:	Review of reports conducted, no major problems found	
Importance to Design Basis Analysis:		
Other Deterministic Insights:		

Section 6 Final Risk Category		
Category:	High Safety Significant	Low Safety Significant X
Basis	Low Failure Probability and lower consequence given draindown of RWST	

MILLSTONE 3
EXPERT PANEL EVALUATION
SEGMENT RANKING WORKSHEET

Section 1 System & Pipe Segment Identification	
System & Segment Description:	RCS-7 Reactor Coolant System LPSI Connection from Loop A Cold Leg Tee to CV 8948A (V30)
Location/P&ID Drawing:	EM-102A
System Function(s):	Reactor heat removal

Section 2 Risk Ranking Information		
Failure Effect on System Without Operator Action:	Large loss of coolant accident	
Failure Effect on System With Operator Action:	Large loss of coolant accident	
PSA Initiating Events Impact:	Large LOCA initiator	
PSA Containment Performance Impact:	None	
Conditional Core Damage Frequency due to Pressure Boundary Failure	Without OA 9.36E-03	With OA 9.36E-03
Total Segment Pressure Boundary Failure Core Damage Frequency (FP * CDF_{cond})	2.34E-12	2.34E-12
CDF_{pb} Importance Measure Values	RAW 4.12E+05 RRW 1.000	8.22E+05 1.000
Comments		

Section 3 Pressure Boundary Failure Probability	
Segment Elements (welds, tees, elbows, etc.):	10" Pipe weld at connection to RCS cold leg
Pressure Boundary Failure Mechanism(s):	Thermal fatigue
Pressure Boundary Failure Probability:	Small Leak: 1.9E-06 Full Break: 4.1E-09 (Use 1E-08)
Basis for Pressure Boundary Failure Probability:	High temperature at pipe weld, Maximum residual stress level, High steady state stress level
Comments	High usage factor. Branch is on fatigue watch list

MILLSTONE 3
EXPERT PANEL EVALUATION
SEGMENT RANKING WORKSHEET

Segment: RCS-7 (Sheet 2)

Section 4 Indirect Effects Evaluation	
Indirect Effects (spray, flood, pipe whip, jet impingement)	None Identified
Pressure Boundary Failure Impact on Other Systems	None Identified
Core Damage Frequency Contribution due to Indirect Effects	None

Section 5 Other Considerations		
External Events Evaluation Seismic:	Fire:	External Flood:
Shutdown Risk Evaluation	Failure results in Large LOCA at shutdown	
Importance to Other Accident Scenarios		
Component Maintenance and Operation Insights:	Review of reports conducted, no major problems found	
Importance to Design Basis Analysis	Large LOCA, per FSAR Chapter 15	
Other Deterministic Insights		

Section 6 Final Risk Category	
Category: High Safety Significant X	Low Safety Significant
Basis Relatively High RAW Value, High consequence - Large LOCA	

MILLSTONE 3
EXPERT PANEL EVALUATION
SEGMENT RANKING WORKSHEET

Section 1 System & Pipe Segment Identification		
System & Segment Description:	RCS-15 Reactor Coolant System HPSI Connection from Cold Leg Tee to CV 8900B (V70)	
Location/P&ID Drawing:	EM-102D	
System Function(s):	Reactor heat removal	

Section 2 Risk Ranking Information		
Failure Effect on System Without Operator Action:	Small loss of coolant accident	
Failure Effect on System With Operator Action:	Small loss of coolant accident	
PSA Initiating Events Impact:	Small LOCA initiator	
PSA Containment Performance Impact:	None	
Conditional Core Damage Frequency due to Pressure Boundary Failure	Without OA 8.61E-04	With OA 8.61E-04
Total Segment Pressure Boundary Failure Core Damage Frequency (FP * CDF_{cond})	2.15E-13	2.15E-13
CDF_{pb} Importance Measure Values	RAW 3.79E+04 RRW 1.000	7.56E+04 1.000
Comments		

Section 3 Pressure Boundary Failure Probability	
Segment Elements (welds, tees, elbows, etc.):	Weld to V70
Pressure Boundary Failure Mechanism(s):	Thermal fatigue
Pressure Boundary Failure Probability:	Small Leak: 0 (Use 1.0E-08) Full Break: Use 1.0E-08
Basis for Pressure Boundary Failure Probability:	High temperature at pipe weld, High normal operating pressure, Maximum residual stress level
Comments	Area of maximum bending stress. SR EL @ 535/540 & Tee @ 550 are on fatigue watch list

MILLSTONE 3
EXPERT PANEL EVALUATION
SEGMENT RANKING WORKSHEET

Segment: RCS-15 (Sheet 2)

Section 4 Indirect Effects Evaluation	
Indirect Effects (spray, flood, pipe whip, jet impingement)	None Identified
Pressure Boundary Failure Impact on Other Systems	None Identified
Core Damage Frequency Contribution due to Indirect Effects	None

Section 5 Other Considerations		
External Events Evaluation Seismic:	Fire:	External Flood:
Shutdown Risk Evaluation	Failure results in Small LOCA at shutdown	
Importance to Other Accident Scenarios		
Component Maintenance and Operation Insights:	Review of reports conducted, no major problems found	
Importance to Design Basis Analysis	Small LOCA, per FSAR Chapter 15	
Other Deterministic Insights		

Section 6 Final Risk Category	
Category: High Safety Significant X	Low Safety Significant
Basis Relatively large RAW value, Unisolable break	

MILLSTONE 3
EXPERT PANEL EVALUATION
SEGMENT RANKING WORKSHEET

Section 1 System & Pipe Segment Identification	
System & Segment Description:	SIL-9 Low Pressure Safety Injection SI Accumulator Tank TK1A to CV8956A (V15)
Location/P&ID Drawing:	EM-112B
System Function(s):	Provides borated water to core during design basis accidents

Section 2 Risk Ranking Information		
Failure Effect on System Without Operator Action:	Loss of Accumulator A water flow to cold leg 1	
Failure Effect on System With Operator Action:	Loss of Accumulator A water	
PSA Initiating Events Impact:	None	
PSA Containment Performance Impact:	None	
Conditional Core Damage Frequency due to Pressure Boundary Failure	Without OA 6.61E-04	With OA 6.61E-04
Total Segment Pressure Boundary Failure Core Damage Frequency ($FP*CDF_{cond}$)	6.61E-12	6.61E-12
CDF_{pb} Importance Measure Values	RAW 2.91E+04 RRW 1.000	5.80E+04 1.001
Comments		

Section 3 Pressure Boundary Failure Probability	
Segment Elements (welds, tees, elbows, etc.):	Valve/pipe weld
Pressure Boundary Failure Mechanism(s):	Thermal fatigue
Pressure Boundary Failure Probability:	Small Leak: 0 (use 1E-08 per demand) Full Break: 0 (use 1E-08 per demand)
Basis for Pressure Boundary Failure Probability:	Maximum Residual Stress
Comments	Location based on potential check valve leakage causing thermal cycling. Choked flow consideration during DBA not considered to be a significant loading concern (thick stainless steel piping).

MILLSTONE 3
EXPERT PANEL EVALUATION
SEGMENT RANKING WORKSHEET

Segment: SIL-9

Section 4 Indirect Effects Evaluation	
Indirect Effects (spray, flood, pipe whip, jet impingement)	None
Pressure Boundary Failure Impact on Other Systems	None
Core Damage Frequency Contribution due to Indirect Effects	None

Section 5 Other Considerations		
External Events Evaluation Seismic: None	Fire:	External Flood:
Shutdown Risk Evaluation	Accumulators isolated during shutdown, do not provide function during shutdown, redundant accumulators available if necessary	
Importance to Other Accident Scenarios		
Component Maintenance and Operation Insights	Review of reports conducted; no major problems found	
Importance to Design Basis Analysis		
Other Deterministic Insights		

Section 6 Final Risk Category	
Category: High Safety Significant	Low Safety Significant X
Basis	Reliable piping, benign normal conditions, minimal consequence.

MILLSTONE 3
EXPERT PANEL EVALUATION
SEGMENT RANKING WORKSHEET

Section 1 System & Pipe Segment Identification	
System & Segment Description:	SIH-4 High Pressure Safety Injection From MOVs 8821A (V15) and 8821B (V19) to CVs 8819C (V24), 8819A (V28), 8819D (V26) & 8819B (V22)
Location/P&ID Drawing:	EM-113B
System Function(s):	Provides emergency core cooling during design basis accidents

Section 2 Risk Ranking Information		
Failure Effect on System Without Operator Action:	Loss of RWST	
Failure Effect on System With Operator Action:	Loss of HPSI flow to all cold legs	
IPE Initiating Events Impact:	None	
IPE Containment Performance Impact:	None	
Conditional Damage Frequency due to Pressure Boundary Failure	Without OA 4.73E-02	With OA 2.99E-03
Total Segment Pressure Boundary Failure Core Damage Frequency (FP * CDFcond)	4.73E-10	2.99E-11
CDFpb Importance Measure Values	RAW 1.50E+05 RRW 1.002	1.23E+04 1.00
Comments		

Section 3 Pressure Boundary Failure Probability	
Segment Elements (welds, tees, elbows, etc.):	Valve to pipe weld at discharge of MOV8835 (V20)
Pressure Boundary Failure Mechanism(s):	External loads
Pressure Boundary Failure Probability:	Small Leak: 0 Full Break: 0 (use 1E-08 per demand)
Basis for Pressure Boundary Failure Probability:	Maximum Residual Stress Level, High Steady State Stress Level, High Normal operating pressure
Comments:	Potential for locked snubber or operational vibration

MILLSTONE 3
EXPERT PANEL EVALUATION
SEGMENT RANKING WORKSHEET
SEGMENT: SIH-4

Section 4 Indirect Effects Evaluation	
Indirect Effects (spray, flood, pipe whip, jet impingement)	None
Pressure Boundary Failure Impact on Other Systems	None
Core Damage Frequency Contribution due to Indirect Effects	None

Section 5 Other Considerations	
External Events Evaluation Seismic: None	Fire: External Flood:
Shutdown Risk Evaluation:	One HPSI required to be available.
Importance to Other Accident Scenarios	
Component Maintenance and Operation Insights	Review of reports conducted; no major problems found
Importance to Design Basis Analysis	LOCA mitigation system
Other Deterministic Insights	

Section 6 Final Risk Category	
Category: High Safety Significant X	Low Safety Significant
Basis	High consequence - loss of RWST, both HPSI pumps injecting to break location.

MILLSTONE 3
EXPERT PANEL EVALUATION
SEGMENT RANKING WORKSHEET

Section 1 System & Pipe Segment Identification		
System & Segment Description:	FWA-12 Auxiliary Feedwater System From V12 and V47 to cavitating venturi (CAV-60D) before SG-D	
Location/P&ID Drawing:	EM-130B	
System Function(s) provide cooling during startup/cooldown	Supply aux. feedwater to steam generators,	

Section 2 Risk Ranking Information		
Failure Effect on System Without Operator Action:	Loss of DWST	
Failure Effect on System With Operator Action Plant	Loss of flow from motor-driven AFW pump A and turbine-driven AFW pump	
IPE Initiating Events Impact:	None	
IPE Containment Performance Impact:	Pipe failure may occur inside containment, steam release	
Conditional Core Damage Frequency due to Pressure Boundary Failure	Without OA 8.34E-02	With OA 2.58E-03
Total Segment Pressure Boundary Failure Core Damage Frequency ($FP*CDF_{cond}$)	8.34E-10	2.58E-11
CDF_{pb} Importance Measure Values	RAW 3.14E+05 RRW 1.003	1.02E+04 1.000
Comments		

Section 3 Pressure Boundary Failure Probability		
Segment Elements (welds, tees, elbows, etc.):	Tee to elbow weld, tee to pipe weld	
Pressure Boundary Failure Mechanism(s):	External loads	
Pressure Boundary Failure Probability:	Small Leak: Full Break:	0 (use 1.0E-08 per demand) 0 (use 1.0E-08 per demand)
Basis for Pressure Boundary Failure Probability	Carbon Steel, Large Initial Flaw, High Steady State Stress	
Comments:	Loads from valve operator or containment during seismic event	

MILLSTONE 3
EXPERT PANEL EVALUATION
SEGMENT RANKING WORKSHEET
SEGMENT: FWA-12

Section 4 Indirect Effects Evaluation	
Indirect Effects (spray, flood, pipe whip, jet impingement)	Loss of cable trays containing HVQ*ACUS1A due to jet impingement within the AFW pump A room
Pressure Boundary Failure Impact on Other Systems	Loss of HVQ*ACUS1A - room cooling to "A" RHR, QSS, SI area
Core Damage Frequency Contribution due to Indirect Effects	

Section 5 Other Considerations	
External Events Evaluation Seismic: None	Fire: External Flood:
Shutdown Risk Evaluation	FWA provides cooling during plant cooldown/startup, used for safe shutdown after plant transients
Importance to Other Accident Scenarios	
Component Maintenance and Operation Insights	Review of reports conducted, no major problems found
Importance to Design Basis Analysis	
Other Deterministic Insights	

Section 6 Final Risk Category	
Category: High Safety Significant X	Low Safety Significant
Basis:	Shorter time to take operator recovery, loss of DWST or loss of motor-driven (A) and turbine-driven AFW pumps (pumps potentially run out)

MILLSTONE 3
EXPERT PANEL EVALUATION
SEGMENT RANKING WORKSHEET

Section 1 System & Pipe Segment Identification	
System & Segment Description: (SIL, RHS)	SIL-3 Low Pressure Safety Injection From MOVs 8716A (V4) and 8716B (V8) to V8735 (V43) and MOV 8840 (V25)
Location/P&ID Drawing:	EM-112A
System Function(s):	Provide emergency cooling and borated water to core during design basis accidents, maintain the core covered, core cooling during shutdown

Section 2 Risk Ranking Information		
Failure Effect on System Without Operator Action:	Loss of RWST	
Failure Effect on System With Operator Action:	Loss of both RHR pump trains	
IPE Initiating Events Impact:	None	
IPE Containment Performance Impact:	None	
Conditional Core Damage Frequency due to Pressure Boundary Failure	Without OA 4.73E-02	With OA 1.96E-02
Total Segment Pressure Boundary Failure Core Damage Frequency ($FP*CDF_{cond}$)	4.73E-10	1.96E-10
CDF_{pb} Importance Measure Values	RAW 1.50E+05 RRW 1.002	8.04E+04 1.001
Comments	Operator would close 8716 valves if break location is known and sufficient time is available	

Section 3 Pressure Boundary Failure Probability	
Segment Elements (welds, tees, elbows, etc.):	Elbow weld at inlet to MOV8840
Pressure Boundary Failure Mechanism(s):	Thermal fatigue (conservative)
Pressure Boundary Failure Probability:	Small Leak: 0 use 1.0E-08 (per demand) Full Break: 0 use 1.0E-08 (per demand)
Basis for Pressure Boundary Failure Probability:	High Steady State Stress Level
Comments	Location based on stress

MILLSTONE 3
EXPERT PANEL EVALUATION
SEGMENT RANKING WORKSHEET
SEGMENT: SIL-3

Section 4 Indirect Effects Evaluation	
Indirect Effects (spray, flood, pipe whip, jet impingement)	None
Pressure Boundary Failure Impact on Other Systems	None
Core Damage Frequency Contribution due to Indirect Effects	None

Section 5 Other Considerations	
External Events Evaluation Seismic: None	Fire: External Flood:
Shutdown Risk Evaluation	Segment is isolated by closure of 8716A&B for train separation during shutdown (no consequence); Loss of decay heat removal if valves are not closed during shutdown
Importance to Other Accident Scenarios	Loss of hot leg recirculation (plan not to use this function)
Component Maintenance and Operation Insights	Review of reports conducted; no major problems found
Importance to Design Basis Analysis	The RHR pumps provide ECCS during design basis accidents. Need cross-connect during design basis event with single failure to get injection to all cold legs.
Other Deterministic Insights	

Section 6 Final Risk Category	
Category: High Safety Significant X	Low Safety Significant
Basis	Same consequence as SIL-1 and SIL-2, but doesn't have shutdown risk.

Risk-based Inspection Expert Panel Evaluation Segment Ranking Worksheet

SEGMENT: ECC-003 **PLANT:** Surry Unit 1

Section 1 System and Pipe Segment Identification

System:	Emergency Core Cooling
Segment Description:	Cold leg loop 3 from CV 1-SI-243 and CV 1-SI-237 to CV 1-SI-85.
Drawing Number:	11448-CBM-089B-3 Sh. 4 Rev. 2, 11448-WMKS-0127J3

Section 2 Risk Ranking Information

FAILURE EFFECTS ON SYSTEM

Without Operator Action:	Loss of RWST inside containment; Potential ISLOCA initiating event separated from the RCS by check valves; degradation of the cold leg injection function; only one injection path to a cold leg (hh and LH); flow restrictors on injection paths limit flow.
With Operator Action:	No change.
Initiating Events Impact:	Potential ISLOCA (CV SI-85 fails & pipe breaks)
Containment Performance Impact:	

CONDITIONAL TREATMENT, CDF and LERF IMPORTANCE MEASURE CALCULATIONS

Treatment: None	Without OA	With OA
Conditional Core Damage Frequency due to Pressure Boundary Failure	0.00E+00	0.00E+00
Conditional Large Early Release Frequency due to Pressure Boundary Failure	0.00E+00	0.00E+00

CDF and IMPORTANCE MEASURE CALCULATIONS		Without OA	With OA
Total Segment Pressure Boundary Failure Core Damage Frequency (FP * CDFcond)		0.00E+00	0.00E+00
Measure Values — CDFpb Importance	RAW	1.00E+00	1.00E+00
	RRW	1	1

LERF and IMPORTANCE MEASURE CALCULATIONS		Without OA	With OA
Total Segment Pressure Boundary Failure Large Early Release Frequency (FP * LERFcond)		0.00E+00	0.00E+00
Measure Values — LERFpb Importance	RAW	1.00E+00	1.00E+00
	RRW	1	1

Expert Panel Discussion/Comments:

Risk-based Inspection Expert Panel Evaluation Segment Ranking Worksheet

SEGMENT: ECC-003 **PLANT:** Surry Unit 1

Section 3 Pressure Boundary Failure Probability

Segment Element(s): Weld 1-05

Failure Mechanism(s): Thermal stratification

			Leak Size	Large	Med	Small
Failure Probability:	**Small Leak (w/o ISI):**	8.67E-04	**Large Leak (w/o ISI):**	8.30E-04	0.00E+00	0.00E+00
	Small Leak (with ISI):	9.35E-05	**Large Leak (with ISI):**	2.91E-05	0.00E+00	0.00E+00

Basis for Failure Probability: See failure probability worksheet

Comments: Based upon ECCS inventory and RWST margin assumed small value of 2 gpm.

Section 4 Indirect Effects Evaluation

Indirect Effects: No indirect impact.

Section 5 Other Considerations

External Events Evaluation:

Seismic: Support function in all seismic induced events

Fire: None

Flood: None

Shutdown Risk Evaluation: Alternate decay heat removal/primary if below mid-loop

Importance to Other Accident Scenarios: None

Component Maintenance and Operation Insights: Cold leg injection for LHI & HHI

Importance to Design Basis Analysis: LOCAs, tube rupture, main steam line break, boron dilution, rod ejection as described in UFSAR chapter 14

Other Deterministic Insights: Segment separated by check valve 1-SI-85 from segment RC-43, check valve 1-SI-237 from segment HHI-12D & check valve 1-SI-243 from segment LHI-10

Section 6 Final Risk Category

Risk Category: ⦿ HIGH SAFETY SIGNIFICANT ○ LOW SAFETY SIGNIFICANT

Basis for Risk Category: Common mode - failure mechanism
- pressurized with RCS heads
- would see increased sump level

Risk-based Inspection Expert Panel Evaluation Segment Ranking Worksheet

SEGMENT: FW-012 **PLANT:** Surry Unit 1

Section 1 System and Pipe Segment Identification

System:	*Feedwater System*
Segment Description:	Feedwater header to SG A from 1-FW-FCV-1478 to 1-FW-12 (check valve).
Drawing Number:	11448-CBM-068A-3 SH. 1, 11448-WMKS-1018A3

Section 2 Risk Ranking Information

FAILURE EFFECTS ON SYSTEM

Without Operator Action:	Loss of both MFW pumps.
With Operator Action:	No change.
Initiating Events Impact:	Loss of main feedwater initiating event.
Containment Performance Impact:	

CONDITIONAL TREATMENT, CDF and LERF IMPORTANCE MEASURE CALCULATIONS

Treatment: SYS/JI/S + DC	Without OA	With OA
Conditional Core Damage Frequency due to Pressure Boundary Failure	1.72E-03	1.72E-03
Conditional Large Early Release Frequency due to Pressure Boundary Failure	1.35E-04	1.35E-04

Treatment: IE/JI/S + DC	Without OA	With OA
Conditional Core Damage Frequency due to Pressure Boundary Failure	1.49E-04	1.49E-04
Conditional Large Early Release Frequency due to Pressure Boundary Failure	3.62E-06	3.62E-06

CDF and IMPORTANCE MEASURE CALCULATIONS		Without OA	With OA
Total Segment Pressure Boundary Failure Core Damage Frequency (FP * CDFcond)		1.38E-07	1.38E-07
Measure Values — CDFpb Importance	RAW	3.07E+01	4.61E+02
	RRW	1.00221	1.03533

Risk-based Inspection Expert Panel Evaluation Segment Ranking Worksheet

SEGMENT: FW-012 **PLANT:** Surry Unit 1

LERF and IMPORTANCE MEASURE CALCULATIONS		Without OA	With OA
Total Segment Pressure Boundary Failure Large Early Release Frequency (FP * LERFcond)		3.59E-09	3.59E-09
Measure Values: LERFph Importance	RAW	2.78E+01	3.12E+02
	RRW	1.00069	1.00811

Expert Panel Discussion/Comments: Failure Effects with Operator Action: Loss of main feedwater; indirect effect of spray and jet impingement assumed instantaneous.

Section 3 Pressure Boundary Failure Probability

Segment Element(s): Pipe to FCV 1478; Drawings: 1018A3

Failure Mechanism(s): Wastage*

			Leak Size	Large	Med	Small
Failure Probability:	Small Leak (w/o ISI):	3.60E-01	Large Leak (w/o ISI):	3.60E-01	0.00E+00	0.00E+00
	Small Leak (with ISI):	3.60E-02	Large Leak (with ISI):	3.60E-02	0.00E+00	0.00E+00

Basis for Failure Probability: See failure probability worksheet

Comments: Based upon condensate automatic make-up capabilities (300,000 gallon tank) to hotwell assumed 500 gpm disabling leak. Leakage could continue for over 8 hours without operator action (1 shift); code allowables used; Segment in augmented program, factor of 10 credit assumed for w/ISI case, SRRA not used

Section 4 Indirect Effects Evaluation

Indirect Effects: Flooding, spray; All three Unit 1 AFW pumps; both Unit 1 CS pumps; Three Main Steam RVs.

Risk-based Inspection Expert Panel Evaluation Segment Ranking Worksheet

SEGMENT: FW-012 **PLANT:** Surry Unit 1

Section 5 Other Considerations

External Events Evaluation:

Seismic: Not considered significant

Fire: Backup water supply for fires.

Flood: None

Shutdown Risk Evaluation:	Alternate decay heat removal
Importance to Other Accident Scenarios:	None
Component Maintenance and Operation Insights:	Fluid contained is condensate. EJC program coverage.
Importance to Design Basis Analysis:	Loss of normal feedwater.
Other Deterministic Insights:	Separated from segment FW-15 by check valve 1-FW-12.

Section 6 Final Risk Category

Risk Category: ⦿ HIGH SAFETY SIGNIFICANT ○ LOW SAFETY SIGNIFICANT

Basis for Risk Category: Total loss of FW, high CDF/LERF with OA RRW

Risk-based Inspection Expert Panel Evaluation Segment Ranking Worksheet

SEGMENT: HHI-004C **PLANT:** Surry Unit 1

Section 1 System and Pipe Segment Identification

System:	High Head Safety Injection
Segment Description:	Discharge of charging pump A, between:1-CH-258 (check valve), 1-CH-MOV-1286A, 1-CH-MOV-1287A.
Drawing Number:	11448-MKS-1105B5, 11448-MKS-1105B9

Section 2 Risk Ranking Information

FAILURE EFFECTS ON SYSTEM

Without Operator Action:	A: Loss of Unit 1 RWST, loss of Unit 2 RWST cross connect to Unit 1 Charging pumps, and loss of Unit 2 Charging pumps cross connect to Unit 1; N: Loss of VCT and BAT to the charging pumps.
With Operator Action:	Closure of CH-MOV-1267A, 1267B, 1275A isolates segment and would result in loss of one charging pump (A) only.

Initiating Events Impact:

Containment Performance Impact:

CONDITIONAL TREATMENT, CDF and LERF IMPORTANCE MEASURE CALCULATIONS

Treatment: SYS/JI/S	Without OA	With OA
Conditional Core Damage Frequency due to Pressure Boundary Failure	1.12E-04	1.12E-04
Conditional Large Early Release Frequency due to Pressure Boundary Failure	2.60E-05	2.60E-05

Treatment: SYS	Without OA	With OA
Conditional Core Damage Frequency due to Pressure Boundary Failure	2.50E-02	0.00E+00
Conditional Large Early Release Frequency due to Pressure Boundary Failure	2.38E-03	2.60E-05

CDF and IMPORTANCE MEASURE CALCULATIONS		Without OA	With OA
Total Segment Pressure Boundary Failure Core Damage Frequency (FP * CDFcond)		4.59E-11	2.97E-13
Measure Values — CDFph Importance	RAW	4.01E+02	2.86E+01
	RRW	1	1

Risk-based Inspection Expert Panel Evaluation Segment Ranking Worksheet

SEGMENT: HHI-004C **PLANT:** Surry Unit 1

LERF and IMPORTANCE MEASURE CALCULATIONS		Without OA	With OA
Total Segment Pressure Boundary Failure Large Early Release Frequency (FP * LERFcond)		4.40E-12	1.17E-13
Measure Values — LERFpb Importance	RAW	4.65E+02	1.18E+02
	RRW	1	1

Expert Panel Discussion/Comments:

Section 3 Pressure Boundary Failure Probability

Segment Element(s): Weld 1-04 3" line

Failure Mechanism(s): Snubber locks up under TC

			Leak Size	Large	Med	Small
Failure Probability:	Small Leak (w/o ISI):	3.88E-05	Large Leak (w/o ISI):	2.66E-05	0.00E+00	0.00E+00
	Small Leak (with ISI):	2.76E-06	Large Leak (with ISI):	9.14E-07	0.00E+00	0.00E+00

Basis for Failure Probability: See failure probability worksheet

Comments: Based upon ECCS inventory and RWST margin assumed small value of 2 gpm.

Section 4 Indirect Effects Evaluation

Indirect Effects: *F/S; 1-CH-P-1A; Bounded by direct effect. The indirect impact attributed to the segment is not more severe than the direct impact; indirect consequences of the HHI and LHI piping is also assessed to result; indirect consequences of the HHI and LHI piping is also assessed to result in the unavailability of one charging pump..*

Risk-based Inspection Expert Panel Evaluation Segment Ranking Worksheet

SEGMENT: HHI-004C **PLANT:** Surry Unit 1

Section 5 Other Considerations

External Events Evaluation:

Seismic: Support function in all seismic induced events

Fire: None

Flood: None

Shutdown Risk Evaluation:	Alternate decay heat removal/primary if below mid-loop
Importance to Other Accident Scenarios:	None
Component Maintenance and Operation Insights:	No history of problems
Importance to Design Basis Analysis:	Important in LOCAs, tube rupture, main steam line break, boron dilution, and rod ejection.
Other Deterministic Insights:	Separated by check valve 1-CH-258 from segment HHI-004A.

Section 6 Final Risk Category

Risk Category: ⦿ HIGH SAFETY SIGNIFICANT ○ LOW SAFETY SIGNIFICANT

Basis for Risk Category:
- High head flow interrupted
- Can mitigate with operator action
- Potential interconnection (common cause) of all charging pumps

Risk-based Inspection Expert Panel Evaluation Segment Ranking Worksheet

SEGMENT: LHI-004 **PLANT:** Surry Unit 1

Section 1 System and Pipe Segment Identification

System:	Low Head Safety Injection
Segment Description:	Containment sump to MOV 1860A.
Drawing Number:	11448-WMKS-1106A7, CBM-089B-3 SH. 1, Rev. 5

Section 2 Risk Ranking Information

FAILURE EFFECTS ON SYSTEM

Without Operator Action:	Loss of Recirc from LPI Train A.
With Operator Action:	No change.

Initiating Events Impact:

Containment Performance Impact:

CONDITIONAL TREATMENT, CDF and LERF IMPORTANCE MEASURE CALCULATIONS

Treatment: SYS	Without OA	With OA
Conditional Core Damage Frequency due to Pressure Boundary Failure	5.87E-05	5.87E-05
Conditional Large Early Release Frequency due to Pressure Boundary Failure	2.00E-07	2.00E-07

CDF and IMPORTANCE MEASURE CALCULATIONS			Without OA	With OA
Total Segment Pressure Boundary Failure Core Damage Frequency (FP * CDFcond)			5.59E-11	5.59E-11
Measure Values	CDFpb Importance	RAW	1.94E+00	1.55E+01
		RRW	1	1.00001

LERF and IMPORTANCE MEASURE CALCULATIONS			Without OA	With OA
Total Segment Pressure Boundary Failure Large Early Release Frequency (FP * LERFcond)			1.90E-13	1.90E-13
Measure Values	LERFpb Importance	RAW	1.04E+00	1.45E+00
		RRW	1	1

Expert Panel Discussion/Comments:

Risk-based Inspection Expert Panel Evaluation Segment Ranking Worksheet

SEGMENT: LHI-004 **PLANT:** Surry Unit 1

Section 3 Pressure Boundary Failure Probability

Segment Element(s): Weld 1-15; Drawing: 1106A7

Failure Mechanism(s): Fatigue*

			Leak Size	Large	Med	Small
Failure Probability:	**Small Leak (w/o ISI):**	2.00E-05	**Large Leak (w/o ISI):**	1.52E-05	0.00E+00	0.00E+00
	Small Leak (with ISI):	7.48E-07	**Large Leak (with ISI):**	1.17E-07	0.00E+00	0.00E+00

Basis for Failure Probability: See failure probability worksheet

Comments: Based upon ECCS inventory and RWST margin assumed small value of 2 gpm; Code allowables used..

Section 4 Indirect Effects Evaluation

Indirect Effects: No indirect impact.

Section 5 Other Considerations

External Events Evaluation:

Seismic: Support function in all seismic induced events

Fire: None

Flood: None

Shutdown Risk Evaluation: Alternate decay heat removal/primary if below mid-loop

Importance to Other Accident Scenarios: None

Component Maintenance and Operation Insights: No history of problems, standby system.

Importance to Design Basis Analysis: Important for large break LOCA

Other Deterministic Insights: None

Section 6 Final Risk Category

Risk Category: ⦿ HIGH SAFETY SIGNIFICANT ○ LOW SAFETY SIGNIFICANT

Basis for Risk Category:
- Single containment isolation
- extension of containment sump

Risk-based Inspection Expert Panel Evaluation Segment Ranking Worksheet

SEGMENT: RC-016 **PLANT:** Surry Unit 1

Section 1 System and Pipe Segment Identification

System:	Reactor Coolant
Segment Description:	SI from CV 1-SI-91 to RCS Loop 1 hot leg.
Drawing Number:	CBM-086A-3 SH. 1, CBM-089B-3 SH. 4, 11448-WMKS-0122H1

Section 2 Risk Ranking Information

FAILURE EFFECTS ON SYSTEM

Without Operator Action:	Large loss of coolant accident Medium loss of coolant accident Small loss of coolant accident
With Operator Action:	No change.
Initiating Events Impact:	Large, Medium, or Small LOCA initiator
Containment Performance Impact:	Either late containment failure or no containment failure are about equally likely.

CONDITIONAL TREATMENT, CDF and LERF IMPORTANCE MEASURE CALCULATIONS

Treatment: IE-L	Without OA	With OA
Conditional Core Damage Frequency due to Pressure Boundary Failure	9.40E-03	9.40E-03
Conditional Large Early Release Frequency due to Pressure Boundary Failure	3.77E-05	3.77E-05

Treatment: IE-M	Without OA	With OA
Conditional Core Damage Frequency due to Pressure Boundary Failure	5.36E-03	5.36E-03
Conditional Large Early Release Frequency due to Pressure Boundary Failure	5.53E-06	5.53E-06

Treatment: IE-S	Without OA	With OA
Conditional Core Damage Frequency due to Pressure Boundary Failure	6.41E-04	6.41E-04
Conditional Large Early Release Frequency due to Pressure Boundary Failure	1.65E-06	1.65E-06

Risk-based Inspection Expert Panel Evaluation Segment Ranking Worksheet

SEGMENT: RC-016 **PLANT:** Surry Unit 1

CDF and IMPORTANCE MEASURE CALCULATIONS		Without OA	With OA
Total Segment Pressure Boundary Failure Core Damage Frequency (FP * CDFcond)		1.23E-07	1.23E-07
Measure Values: CDFph Importance	RAW	2.46E+02	3.80E+03
	RRW	1.00197	1.03132

LERF and IMPORTANCE MEASURE CALCULATIONS		Without OA	With OA
Total Segment Pressure Boundary Failure Large Early Release Frequency (FP * LERFcond)		3.52E-10	3.52E-10
Measure Values: LERFph Importance	RAW	9.66E+00	1.02E+02
	RRW	1.00007	1.00079

Expert Panel Discussion/Comments:

Section 3 Pressure Boundary Failure Probability

Segment Element(s): ID root of welds 1-08, 2-08; Drawings: 122H1, 122K1

Failure Mechanism(s): Striping/stratification, Thermal fatigue

			Leak Size	Large	Med	Small
Failure Probability:	Small Leak (w/o ISI):	5.31E-04	Large Leak (w/o ISI):	3.09E-04	3.34E-04	3.59E-04
	Small Leak (with ISI):	1.69E-05	Large Leak (with ISI):	5.52E-06	6.35E-06	7.00E-06

Basis for Failure Probability: See failure probability worksheet

Comments: Large LOCA - 5001GPM, Medium LOCA - 1501 GPM, Small LOCA - 100 GPM/BASIS: LARGE LOCA NUREG/CR-4550 PAGES 3-2, 3-3

Section 4 Indirect Effects Evaluation

Indirect Effects: No indirect impact.

Risk-based Inspection Expert Panel Evaluation Segment Ranking Worksheet

SEGMENT: RC-016 **PLANT:** Surry Unit 1

Section 5 Other Considerations

External Events Evaluation:

Seismic: Contributes about 7% to small and medium break LOCA seismic CDF. Minimal contribution to large break LOCA seismic CDF.

Fire: Not considered a significant contributor to external fire events.

Flood: Not considered a significant contributor to external flood events.

Shutdown Risk Evaluation: Shutdown LOCA less likely than at power LOCA since pressure reduced.

Importance to Other Accident Scenarios: None

Component Maintenance and Operation Insights: Temperature average between 547 and 573 degrees F. at 2235 psig. during normal operation. Chemistry controlled to reduce corrosion potential.

Importance to Design Basis Analysis: LOCA described in UFSAR chapter 14. Second barrier provided in defense of fission product release.

Other Deterministic Insights: Segment separated by check valve 1-SI-91 from segment ECCS-005

Section 6 Final Risk Category

Risk Category: ⦿ HIGH SAFETY SIGNIFICANT ○ LOW SAFETY SIGNIFICANT

Basis for Risk Category: No credit for thermal monitoring.

Risk-based Inspection Expert Panel Evaluation Segment Ranking Worksheet

SEGMENT: RC-058 **PLANT:** Surry Unit 1

Section 1 System and Pipe Segment Identification

ystem:	Reactor Coolant
egment Description:	From block valve 1-RC-MOV-1535 to PORV 1-RC-PCV-1456.
rawing Number:	CBM-086B-3 SH. 1, 11448-WMKS-0124A1-1

Section 2 Risk Ranking Information

FAILURE EFFECTS ON SYSTEM

Without Operator Action:	Medium loss of coolant accident Small loss of coolant accident
With Operator Action:	Closure of MOV-1535 terminates LOCA, therefore none.
Initiating Events Impact:	Medium, or Small LOCA initiator
Containment Performance Impact:	Either late containment failure or no containment failure are about equally likely.

ONDITIONAL TREATMENT, CDF and LERF IMPORTANCE MEASURE CALCULATIONS

Treatment: IE-M	Without OA	With OA
Conditional Core Damage Frequency due to Pressure Boundary Failure	5.36E-03	0.00E+00
Conditional Large Early Release Frequency due to Pressure Boundary Failure	5.53E-06	0.00E+00

Treatment: IE-S	Without OA	With OA
Conditional Core Damage Frequency due to Pressure Boundary Failure	6.41E-04	0.00E+00
Conditional Large Early Release Frequency due to Pressure Boundary Failure	1.65E-06	0.00E+00

CDF and IMPORTANCE MEASURE CALCULATIONS		Without OA	With OA
Total Segment Pressure Boundary Failure Core Damage Frequency (FP * CDFcond)		6.84E-09	0.00E+00
Measure Values — CDFpb Importance	RAW	9.66E+01	1.00E+00
	RRW	1.00011	1

Risk-based Inspection Expert Panel Evaluation Segment Ranking Worksheet

SEGMENT: RC-058 **PLANT:** Surry Unit 1

LERF and IMPORTANCE MEASURE CALCULATIONS		Without DA	With DA
Total Segment Pressure Boundary Failure Large Early Release Frequency (FP * LERFcond)		8.18E-12	0.00E+00
Measure Values — LERFpb Importance	RAW	2.39E+00	1.00E+00
	RRW	1	1

Expert Panel Discussion/Comments:

Section 3 Pressure Boundary Failure Probability

Segment Element(s): Pipe to valve, pipe to reducer; Drawings: 0124A1-1

Failure Mechanism(s): Fatigue

			Leak Size	Large	Med	Small
Failure Probability:	Small Leak (w/o ISI):	4.15E-05	Large Leak (w/o ISI):	0.00E+00	4.56E-05	4.56E-05
	Small Leak (with ISI):	3.20E-05	Large Leak (with ISI):	0.00E+00	2.81E-05	2.81E-05

Basis for Failure Probability: See failure probability worksheet

Comments: Medium LOCA = 1501GPM, Small LOCA = 100 GPM/BASIS: NUREG/CR-4550 PAGES 3-2, 3-3; 20% snubber failure probability used due to large number of snubbers; use values/note for no leak detection Large Leak probability should be used, also for small leak

Section 4 Indirect Effects Evaluation

Indirect Effects: No indirect impact.

Risk-based Inspection Expert Panel Evaluation Segment Ranking Worksheet

SEGMENT: RC-058 **PLANT:** Surry Unit 1

Section 5 Other Considerations

External Events Evaluation:

Seismic:	Contributes about 7% to small and medium break LOCA seismic CDF. Minimal contribution to large break LOCA seismic CDF.
Fire:	Not considered a significant contributor to external fire events.
Flood:	Not considered a significant contributor to external flood events.

Shutdown Risk Evaluation:	Shutdown LOCA less likely than at power LOCA since pressure reduced.
Importance to Other Accident Scenarios:	None
Component Maintenance and Operation Insights:	Temperature average between 547 and 573 degrees F. at 2235 psig. during normal operation. Chemistry controlled to reduce corrosion potential.
Importance to Design Basis Analysis:	LOCA described in UFSAR chapter 14. Second barrier provided in defense of fission product release.
Other Deterministic Insights:	None

Section 6 Final Risk Category

Risk Category: ⦿ HIGH SAFETY SIGNIFICANT ○ LOW SAFETY SIGNIFICANT

Basis for Risk Category: 3x2 reducer at PCV-1456 is high stress location (large fraction of code allowable)

Risk-based Inspection Expert Panel Evaluation Segment Ranking Worksheet

SEGMENT: SW-004 **PLANT:** Surry Unit 1

Section 1 System and Pipe Segment Identification

System:	Service Water
Segment Description:	From 1-SW-P-1A discharge through diesel cooler and shaft bearing oil cooler to intake structure.
Drawing Number:	CBM-071A-3 SH.1

Section 2 Risk Ranking Information

FAILURE EFFECTS ON SYSTEM

Without Operator Action:	Loss of pump 1-SW-P-1A
With Operator Action:	No change.

Initiating Events Impact:

Containment Performance Impact:

CONDITIONAL TREATMENT, CDF and LERF IMPORTANCE MEASURE CALCULATIONS

Treatment: SYS/S	Without OA	With OA
Conditional Core Damage Frequency due to Pressure Boundary Failure	3.69E-04	3.69E-04
Conditional Large Early Release Frequency due to Pressure Boundary Failure	9.50E-06	9.50E-06

Treatment: SYS	Without OA	With OA
Conditional Core Damage Frequency due to Pressure Boundary Failure	3.69E-04	3.69E-04
Conditional Large Early Release Frequency due to Pressure Boundary Failure	9.50E-06	9.50E-06

CDF and IMPORTANCE MEASURE CALCULATIONS		Without OA	With OA
Total Segment Pressure Boundary Failure Core Damage Frequency (FP * CDFcond)		2.35E-08	2.35E-08
CDFpb Importance Measure Values	RAW	1.28E+01	1.83E+02
	RRW	1.00038	1.00584

Risk-based Inspection Expert Panel Evaluation Segment Ranking Worksheet

SEGMENT: SW-004 **PLANT:** Surry Unit 1

LERF and IMPORTANCE MEASURE CALCULATIONS			Without OA	With OA
Total Segment Pressure Boundary Failure Large Early Release Frequency (FP * LERFcond)			6.07E-10	6.07E-10
Measure Values	LERFpb Importance	RAW	4.67E+00	4.36E+01
		RRW	1.00012	1.00136

Expert Panel Discussion/Comments:

Section 3 Pressure Boundary Failure Probability

Segment Element(s): 163L - CLASS PIPE - WELD AT REDUCER ON 2" SIDE

Failure Mechanism(s): Wastage/Pitting

			Leak Size	Large	Med	Small
Failure Probability:	**Small Leak (w/o ISI):**	1.00E-02	**Large Leak (w/o ISI):**	1.00E-02	0.00E+00	0.00E+00
	Small Leak (with ISI):	1.00E-02	**Large Leak (with ISI):**	1.00E-02	0.00E+00	0.00E+00

Basis for Failure Probability: See failure probability worksheet

Comments: 10GPM/BASED UPON 10% OF 2" PIPE FLOW; NO SNUBBERS; FIBERGLASS PIPING FAILURE PROBABILITY SET AT 1 X 10E-2 FOR SMALL LEAK AND LARGE LEAK

Section 4 Indirect Effects Evaluation

Indirect Effects: Loss of SW pumps.

Risk-based Inspection Expert Panel Evaluation Segment Ranking Worksheet

SEGMENT: SW-004 **PLANT:** Surry Unit 1

Section 5 Other Considerations

External Events Evaluation:

Seismic: Provides heat sink for seismic LOCA.

Fire: Not considered a significant contributor to external fire events.

Flood: Not considered a significant contributor to external flood events.

Shutdown Risk Evaluation: Primary heat sink for decay heat removal during shutdown. Alternate long term decay heat removal.

Importance to Other Accident Scenarios: Provides heat sink for spent fuel pit cooling.

Component Maintenance and Operation Insights: Contains river water from James River. Flows only during accident with loss of off-site power and during quarterly pump testing.

Importance to Design Basis Analysis: Large break LOCA long term heat removal described in UFSAR chapter 14.

Other Deterministic Insights: None.

Section 6 Final Risk Category

Risk Category: ◉ HIGH SAFETY SIGNIFICANT ○ LOW SAFETY SIGNIFICANT

Basis for Risk Category: High CDF w/OA RRW, fiberglass failures experienced at plant.

APPENDIX C

SAMPLE FAILURE PROBABILITY WORKSHEETS

This appendix contains sample SRRA code input worksheets and the code output for Millstone 3 and Surry. Supplement 1 discusses the SRRA code and its input and output parameters in detail.

Millstone 3

The piping segments presented are the same as those in Appendix B. The piping segments are ECCS-1 (Tables C-1 through C-3), FWS-1 (Tables C-4 through C-6), RCS-7 (Tables C-7 through C-9), RCS-15 (Tables C-10 through C-12), and SIL-9 (Tables C-13 through C-15). For a given segment, the input worksheet is shown first, followed by the small leak probability calculation output then the full break output. For the cases in which 0 failures are predicted, the values in parentheses on the worksheets are those calculated assuming one half failure in 5000 trails, corrected for importance sampling.

Note: The failure probability worksheets and results for Millstone 3 are likely to change because of the modifications made to the SRRA model as described in Supplement 1.

Surry

The piping segments presented are the same as those in Appendix B. The piping segments are ECC-03 (Tables C-16 through C-18), FW-12 (Tables C-19 through C-21), LHI-4 (Tables C-22 through C-24), HHI-4C (Tables C-25 through C-27), RC-16 (Tables C-28 through C-30), RC-58 (Tables C-31 through C-33), and SW-04 (Tables C-34 through C-36). Similar to Millstone, the input worksheet is shown along with the small leak probability calculation output and the large leak probability calculation.

Table C-1

ECCS-1

Piping Structural Reliability Estimates for Millstone Unit No. 3

System: ECCS		Segment: 1			Sheet of
P&ID No.: EM-112A, B & 113B		Data Point: 165 of X7003B			
Pipe Stress Calculation Number: X7003B 831, X10705		PSI/Const. Method: VT-2, PT, UT/Hydro, RT			
Piping Stress Isometric No.: SIL-6, 159 & 165		Proposed ISI Method: VT-2, UT			
Piping Component/Segment Element (weld, tee, elbow, etc.): Weld at valve V985					
No.	**Input Parameter Description**	**Check Input Choice (for Table 1 Value)**			**Set Value***
1	Type of Piping Material	304 SS	316 SS	Carbon Steel	---
2	Temperature at Pipe Weld	Low (150)	Medium (350)	High (550)	350
3	Nominal Pipe Size	Small (2)	Medium (5)	Large (16)	6
4	Pipe Wall Thickness	Thin (.06)	Normal (.14)	Thick (.22)	.12
5	Normal Operating Pressure	Low (0.5)	Medium (1.3)	High (2.1)	2.5
6	Residual Stress Level	None (0.0)	Moderate (0.1)	Maximum (0.2)	.2
7	Initial Flaw Size	Small (.05)	Medium (.11)	Large (.17)	.05
8	Steady-State Stress Level	Low (.05)	Medium (.11)	High (.17)	.17
9	Stress Corrosion Potential	None (0.0)	Moderate (0.5)	Maximum (1.0)	0
10	Material Wastage Potential	None (0.0)	Moderate (0.5)	Maximum (1.0)	0
11	High Cycle Fatigue Loads	None (0.0)	Moderate (.08)	Maximum (.16)	0
12	Fatigue Transient Loads	Low (.10)	Medium (.22)	High (.34)	.28
13	Fatigue Transient Frequency	Low (5)	Medium (13)	High (21)	17
14	Design-Limiting Stress (Break Only)	Low (.10)	Medium (.26)	High (.42)	.22
15	Optional Crack Inspection Interval	Low (6)	Medium (10)	High (14)	10
16	Optional crack Inspection Accuracy	High (.16)	Medium (.24)	Low (.32)	.24
*For optional numeric input, use a value (and associated units) from the standard range given in Table 1.					
Small Leak Probability, No ISI: 0 (6.4E-09)		Optional Leak Probability With ISI: 0 (6.4E-09)			
Full Break Probability, No ISI: 0 (2.3E-12)		Optional Break Probability With ISI: 0 (2.3E-12)			
Comments: Valve is located on branch line within 2 ft. of run pipe connection. Many nearby branch line snubbers exist which potentially may lockup causing break potential.					

Table C-2

ECCS-1 SMALL LEAK PROBABILITY

STRUCTURAL RELIABILITY AND RISK ASSESSMENT (SRRA)
WESTINGHOUSE PROBABILITY OF FAILURE PROGRAM SPFMPROF ESBU-NTD

INPUT VARIABLES FOR CASE 34: 316 STAINLESS STEEL PIPE WELD LEAK

NCYCLE =	40	NFAILS =	1000	NTRIAL =	5000
NOVARS =	29	NUMSET =	6	NUMISI =	5
NUMSSC =	7	NUMTRC =	7	NUMFMD =	4

VARIABLE NO.	NAME	DISTRIBUTION TYPE	LOG	MEDIAN VALUE	DEVIATION OR FACTOR	SHIFT MV/SD	USAGE NO.	SUB
1	PIPE-DIA	NORMAL	NO	6.0000D+00	3.0000D-02	.00	1	SET
2	WALL/DIA	NORMAL	NO	1.1000D-01	3.3000D-03	.00	2	SET
3	SRESIDUAL	NORMAL	YES	1.2357D+01	1.4125D+00	1.00	3	SET
4	INT%DEPTH	NORMAL	YES	5.0000D+00	1.4125D+00	1.00	4	SET
5	L/D-RATIO	NORMAL	YES	6.0000D+00	1.4125D+00	1.00	5	SET
6	PROB/VOL	- CONSTANT -		1.0000D-04			6	SET
7	FIRST-ISI	- CONSTANT -		5.0000D+00			1	ISI
8	FREQ-ISI	- CONSTANT -		1.0000D+01			2	ISI
9	EPST-PND	- CONSTANT -		1.0000D-03			3	ISI
10	ASTAR-PND	- CONSTANT -		-4.8000D-01			4	ISI
11	ANUU-PND	- CONSTANT -		1.6000D+00			5	ISI
12	HOURS/CY	NORMAL	YES	7.4473D+03	1.0500D+00	1.00	1	SSC
13	PRESSURE	NORMAL	NO	2.5000D+00	1.5000D-02	.00	2	SSC
14	STRESS-SS	NORMAL	YES	1.0503D+01	1.2589D+00	.00	3	SSC
15	SCC-COEFF	NORMAL	YES	3.2310D-12	2.3714D+00	1.00	4	SSC
16	SCC-EXPNT	- CONSTANT -		2.1610D+00			5	SSC
17	SCC-TIMEI	- CONSTANT -		1.0000D+00			6	SSC
18	ECW-RATE	NORMAL	YES	1.2740D-11	2.3714D+00	.00	7	SSC
19	NOFTRS/HR	- CONSTANT -		6.0000D+01			1	TRC
20	STRESS-FT	NORMAL	YES	6.1783D-02	1.4125D+00	.00	2	TRC
21	NOSTRS/CY	- CONSTANT -		1.5000D+01			3	TRC
22	STRESS-ST	NORMAL	YES	1.7917D+01	1.2589D+00	.00	4	TRC
23	FCG-COEFF	NORMAL	YES	9.1401D-12	2.8508D+00	1.00	5	TRC
24	FCG-EXPNT	- CONSTANT -		4.0000D+00			6	TRC
25	FCG-THOLD	- CONSTANT -		4.6000D+00			7	TRC
26	LIMIT-DSL	NORMAL	NO	-9.7000D-01	1.0000D-02	.00	1	FMD
27	LIMIT-PBS	- CONSTANT -		0.0000D+00			2	FMD
28	STRESS-DL	- CONSTANT -		0.0000D+00			3	FMD
29	FREQ-DLTR	- CONSTANT -		0.0000D+00			4	FMD

PROBABILITIES OF FAILURE MODE: EXCEED LIMITING DEPTH FOR SMALL LEAK

NUMBER FAILED = 0 NUMBER OF TRIALS = 5000

END OF CYCLE	FAILURE PROBABILITY WITHOUT AND WITH IN-SERVICE INSPECTION FOR PERIOD	CUM. TOTAL	FOR PERIOD	CUM. TOTAL
.0	6.37720D-09	6.37720D-09	6.37720D-09	6.37720D-09
40.0	0.00000D+00	6.37720D-09	0.00000D+00	6.37720D-09

Table C-3

ECCS-1 FULL BREAK PROBABILITY

STRUCTURAL RELIABILITY AND RISK ASSESSMENT (SRRA)
WESTINGHOUSE PROBABILITY OF FAILURE PROGRAM SPFMPROF ESBU.-NTD

INPUT VARIABLES FOR CASE 35: 316 STAINLESS STEEL PIPE WELD BREAK

NCYCLE =	40	NFAILS =	1000	NTRIAL =	5000
NOVARS =	29	NUMSET =	6	NUMISI =	5
NUMSSC =	7	NUMTRC =	7	NUMFMD =	4

VARIABLE NO.	NAME	DISTRIBUTION TYPE	LOG	MEDIAN VALUE	DEVIATION OR FACTOR	SHIFT MV/SD	USAGE NO.	SUB
1	PIPE-DIA	NORMAL	NO	6.0000D+00	3.0000D-02	.00	1	SET
2	WALL/DIA	NORMAL	NO	1.1000D-01	3.3000D-03	.00	2	SET
3	SRESIDUAL	NORMAL	YES	1.2357D+01	1.4125D+00	1.00	3	SET
4	INT%DEPTH	NORMAL	YES	5.0000D+00	1.4125D+00	1.00	4	SET
5	L/D-RATIO	NORMAL	YES	6.0000D+00	1.4125D+00	1.00	5	SET
6	PROB/VOL	- CONSTANT -		1.0000D-04			6	SET
7	FIRST-ISI	- CONSTANT -		5.0000D+00			1	ISI
8	FREQ-ISI	- CONSTANT -		1.0000D+01			2	ISI
9	EPST-PND	- CONSTANT -		1.0000D-03			3	ISI
10	ASTAR-PND	- CONSTANT -		-4.8000D-01			4	ISI
11	ANUU-PND	- CONSTANT -		1.6000D+00			5	ISI
12	HOURS/CY	NORMAL	YES	7.4473D+03	1.0500D+00	1.00	1	SSC
13	PRESSURE	NORMAL	NO	2.5000D+00	1.5000D-02	.00	2	SSC
14	STRESS-SS	NORMAL	YES	1.0503D+01	1.2589D+00	.00	3	SSC
15	SCC-COEFF	NORMAL	YES	3.2310D-12	2.3714D+00	1.00	4	SSC
16	SCC-EXPNT	- CONSTANT -		2.1610D+00			5	SSC
17	SCC-TIMEI	- CONSTANT -		1.0000D+00			6	SSC
18	ECW-RATE	NORMAL	YES	1.2740D-11	2.3714D+00	.00	7	SSC
19	NOFTRS/HR	- CONSTANT -		6.0000D+01			1	TRC
20	STRESS-FT	NORMAL	YES	6.1783D-02	1.4125D+00	.00	2	TRC
21	NOSTRS/CY	- CONSTANT -		1.5000D+01			3	TRC
22	STRESS-ST	NORMAL	YES	1.7917D+01	1.2589D+00	.00	4	TRC
23	FCG-COEFF	NORMAL	YES	9.1401D-12	2.8508D+00	1.00	5	TRC
24	FCG-EXPNT	- CONSTANT -		4.0000D+00			6	TRC
25	FCG-THOLD	- CONSTANT -		4.6000D+00			7	TRC
26	LIMIT-DSL	- CONSTANT -		0.0000D+00			1	FMD
27	LIMIT-PBS	NORMAL	NO	6.1783D+01	3.2000D+00	-1.00	2	FMD
28	STRESS-DL	NORMAL	YES	1.4210D+01	1.4125D+00	1.00	3	FMD
29	FREQ-DLTR	- CONSTANT -		1.0000D-03			4	FMD

PROBABILITIES OF FAILURE MODE: EXCEED FLOW STRESS LIMIT FOR FULL BREAK

NUMBER FAILED = 0 NUMBER OF TRIALS = 5000

END OF CYCLE	FAILURE PROBABILITY WITHOUT AND WITH IN-SERVICE INSPECTION FOR PERIOD	CUM. TOTAL	FOR PERIOD	CUM. TOTAL
.0	2.34604D-12	2.34604D-12	2.34604D-12	2.34604D-12
40.0	0.00000D+00	2.34604D-12	0.00000D+00	2.34604D-12

Table C-4 FWS-1					
Piping Structural Reliability Estimates for Millstone Unit No. 3					
System: FWS		Segment: 1			Sheet of
P&ID No.: EM-130C		Data Point: 410			
Pipe Stress Calculation Number: X1709		PSI/Const. Method: VT-2/Hydro, RT			
Piping Stress Isometric No.: C.I. FWS-11		Proposed ISI Method: VT-2, UT			
Piping Component/Segment Element (weld, tee, elbow, etc.): Pipe to valve (V14) weld					
No.	Input Parameter Description	Check Input Choice (for Table 1 Value)			Set Value*
1	Type of Piping Material	304 SS	316 SS	Carbon Steel	---
2	Temperature at Pipe Weld	Low (150)	Medium (350)	High (550)	446
3	Nominal Pipe Size	Small (2)	Medium (5)	Large (16)	18
4	Pipe Wall Thickness	Thin (.06)	Normal (.14)	Thick (.22)	.06
5	Normal Operating Pressure	Low (0.5)	Medium (1.3)	High (2.1)	1.8
6	Residual Stress Level	None (0.0)	Moderate (0.1)	Maximum (0.2)	0.1
7	Initial Flaw Size	Small (.05)	Medium (.11)	Large (.17)	.05
8	Steady-State Stress Level	Low (.05)	Medium (.11)	High (.17)	.08
9	Stress Corrosion Potential	None (0.0)	Moderate (0.5)	Maximum (1.0)	0
10	Material Wastage Potential	None (0.0)	Moderate (0.5)	Maximum (1.0)	0.5
11	High Cycle Fatigue Loads	None (0.0)	Moderate (.08)	Maximum (.16)	0
12	Fatigue Transient Loads	Low (.10)	Medium (.22)	High (.34)	0.1
13	Fatigue Transient Frequency	Low (5)	Medium (13)	High (21)	13
14	Design-Limiting Stress (Break Only)	Low (.10)	Medium (.26)	High (.42)	.16
15	Optional Crack Inspection Interval	Low (6)	Medium (10)	High (14)	10
16	Optional crack Inspection Accuracy	High (.16)	Medium (.24)	Low (.32)	.24
*For optional numeric input, use a value (and associated units) from the standard range given in Table 1.					
Small Leak Probability, No ISI: 1.09E-3		Optional Leak Probability With ISI: 6.21E-06			
Full Break Probability, No ISI: 0 (3.5E-11)		Optional Break Probability With ISI: 0 (3.5E-11)			
Comments: Break exclusion zone. No EC trending, LOC 040-016 US.					

Table C-5

FWS-1 SMALL LEAK PROBABILITY

STRUCTURAL RELIABILITY AND RISK ASSESSMENT (SRRA)
WESTINGHOUSE PROBABILITY OF FAILURE PROGRAM SPFMPROF ESBU-NTD

INPUT VARIABLES FOR CASE 2: CARBON STEEL PIPE WELD SMALL LEAK

NCYCLE = 40 NFAILS = 1000 NTRIAL = 5000
NOVARS = 29 NUMSET = 6 NUMISI = 5
NUMSSC = 7 NUMTRC = 7 NUMFMD = 4

VARIABLE NO.	NAME	DISTRIBUTION TYPE	LOG	MEDIAN VALUE	DEVIATION OR FACTOR	SHIFT MV/SD	USAGE NO.	SUB
1	PIPE-DIA	NORMAL	NO	1.8000D+01	9.0000D-02	.00	1	SET
2	WALL/DIA	NORMAL	NO	6.0000D-02	1.8000D-03	.00	2	SET
3	SRESIDUAL	NORMAL	YES	6.4337D+00	1.4125D+00	.00	3	SET
4	INT%DEPTH	NORMAL	YES	5.0000D+00	1.4125D+00	1.00	4	SET
5	L/D-RATIO	NORMAL	YES	6.0000D+00	1.4125D+00	1.00	5	SET
6	PROB/VOL	- CONSTANT -		1.0000D-04			6	SET
7	FIRST-ISI	- CONSTANT -		5.0000D+00			1	ISI
8	FREQ-ISI	- CONSTANT -		1.0000D+01			2	ISI
9	EPST-PND	- CONSTANT -		5.0000D-03			3	ISI
10	ASTAR-PND	- CONSTANT -		-2.4000D-01			4	ISI
11	ANUU-PND	- CONSTANT -		3.0000D+00			5	ISI
12	HOURS/CY	NORMAL	YES	7.4473D+03	1.0500D+00	1.00	1	SSC
13	PRESSURE	NORMAL	NO	1.8000D+00	1.5000D-02	.00	2	SSC
14	STRESS-SS	NORMAL	YES	5.1470D+00	1.2589D+00	.00	3	SSC
15	SCC-COEFF	NORMAL	YES	3.5900D-13	2.3714D+00	.00	4	SSC
16	SCC-EXPNT	- CONSTANT -		2.1610D+00			5	SSC
17	SCC-TIMEI	- CONSTANT -		1.0000D+00			6	SSC
18	ECW-RATE	NORMAL	YES	6.3700D-07	2.3714D+00	.00	7	SSC
19	NOFTRS/HR	- CONSTANT -		6.0000D+01			1	TRC
20	STRESS-FT	NORMAL	YES	6.4337D-02	1.4125D+00	.00	2	TRC
21	NOSTRS/CY	- CONSTANT -		1.3000D+01			3	TRC
22	STRESS-ST	NORMAL	YES	6.4337D+00	1.2589D+00	1.00	4	TRC
23	FCG-COEFF	NORMAL	YES	1.2017D-11	2.8508D+00	1.00	5	TRC
24	FCG-EXPNT	- CONSTANT -		3.7000D+00			6	TRC
25	FCG-THOLD	- CONSTANT -		3.5000D+00			7	TRC
26	LIMIT-DSL	NORMAL	NO	-9.7000D-01	1.0000D-02	.00	1	FMD
27	LIMIT-PBS	- CONSTANT -		0.0000D+00			2	FMD
28	STRESS-DL	- CONSTANT -		0.0000D+00			3	FMD
29	FREQ-DLTR	- CONSTANT -		0.0000D+00			4	FMD

PROBABILITIES OF FAILURE MODE: EXCEED LIMITING DEPTH FOR SMALL LEAK

NUMBER FAILED = 316 NUMBER OF TRIALS = 5000

END OF CYCLE	FAILURE PROBABILITY WITHOUT AND WITH IN-SERVICE INSPECTION FOR PERIOD	CUM. TOTAL	FOR PERIOD	CUM. TOTAL
6.0	1.41843D-08	1.41843D-08	7.09612D-11	7.09612D-11
7.0	8.24432D-07	8.38616D-07	4.34590D-09	4.41686D-09
8.0	4.48267D-07	1.28688D-06	2.25107D-09	6.66793D-09
9.0	1.86245D-05	1.99114D-05	5.15727D-07	5.22395D-07
10.0	1.62683D-07	2.00740D-05	1.18905D-09	5.23584D-07
11.0	2.59319D-05	4.60059D-05	9.03992D-07	1.42758D-06

Table C-5 (cont.)

FWS-1 SMALL LEAK PROBABILITY

12.0	8.95441D-07	4.69014D-05	3.93405D-08	1.46692D-06
14.0	3.21027D-06	5.01116D-05	1.22563D-06	2.69255D-06
15.0	2.74723D-08	5.01391D-05	6.15578D-09	2.69871D-06
16.0	2.95454D-06	5.30936D-05	6.75335D-09	2.70546D-06
17.0	1.58686D-05	6.89622D-05	5.10427D-08	2.75650D-06
18.0	5.31092D-07	6.94933D-05	1.32861D-09	2.75783D-06
19.0	6.22227D-05	1.31716D-04	1.89205D-07	2.94704D-06
20.0	1.34045D-05	1.45121D-04	1.82564D-08	2.96529D-06
21.0	8.13526D-06	1.53256D-04	2.86175D-08	2.99391D-06
22.0	6.98358D-06	1.60239D-04	4.41429D-08	3.03805D-06
23.0	1.05365D-04	2.65604D-04	1.05385D-06	4.09190D-06
24.0	1.05498D-04	3.71102D-04	4.55720D-07	4.54762D-06
25.0	8.28412D-05	4.53943D-04	1.51379D-06	6.06141D-06
26.0	1.63160D-05	4.70259D-04	7.16360D-10	6.06212D-06
27.0	2.23614D-04	6.93873D-04	3.49592D-08	6.09708D-06
28.0	1.09478D-04	8.03351D-04	2.32728D-08	6.12036D-06
29.0	1.08010D-05	8.14152D-04	9.21074D-10	6.12128D-06
30.0	1.78803D-05	8.32032D-04	3.64537D-09	6.12492D-06
31.0	4.47131D-06	8.36503D-04	9.58423D-10	6.12588D-06
32.0	7.85007D-05	9.15004D-04	4.43658D-08	6.17025D-06
33.0	9.77842D-06	9.24782D-04	4.74730D-09	6.17499D-06
34.0	1.75473D-05	9.42330D-04	1.57386D-08	6.19073D-06
35.0	2.58613D-05	9.68191D-04	1.96033D-08	6.21034D-06
36.0	3.97057D-05	1.00790D-03	2.22109D-10	6.21056D-06
37.0	4.21448D-05	1.05004D-03	1.58531D-10	6.21072D-06
38.0	7.24170D-06	1.05728D-03	5.41483D-11	6.21077D-06
39.0	1.53097D-05	1.07259D-03	1.93248D-10	6.21096D-06
40.0	1.44083D-05	1.08700D-03	2.48961D-10	6.21121D-06
	DEVIATION ON CUMULATIVE TOTALS =		5.91907D-05	4.62194D-06

Table C-6

FWS-1 FULL BREAK PROBABILITY

```
                    STRUCTURAL RELIABILITY AND RISK ASSESSMENT (SRRA)
WESTINGHOUSE          PROBABILITY OF FAILURE PROGRAM SPFMPROF        ESBU-NTD

==============================================================================
      INPUT VARIABLES FOR CASE  3: CARBON STEEL PIPE WELD FULL BREAK

      NCYCLE =    40            NFAILS =  1000            NTRIAL =  5000
      NOVARS =    29            NUMSET =     6            NUMISI =     5
      NUMSSC =     7            NUMTRC =     7            NUMFMD =     4

    VARIABLE        DISTRIBUTION      MEDIAN      DEVIATION    SHIFT    USAGE
   NO.   NAME       TYPE     LOG       VALUE      OR FACTOR    MV/SD   NO. SUB

    1  PIPE-DIA     NORMAL   NO     1.8000D+01   9.0000D-02     .00    1  SET
    2  WALL/DIA     NORMAL   NO     6.0000D-02   1.8000D-03     .00    2  SET
    3  SRESIDUAL    NORMAL   YES    6.4337D+00   1.4125D+00     .00    3  SET
    4  INT%DEPTH    NORMAL   YES    5.0000D+00   1.4125D+00    1.00    4  SET
    5  L/D-RATIO    NORMAL   YES    6.0000D+00   1.4125D+00    1.00    5  SET
    6  PROB/VOL     - CONSTANT -    1.0000D-04                          6  SET
    7  FIRST-ISI    - CONSTANT -    5.0000D+00                          1  ISI
    8  FREQ-ISI     - CONSTANT -    1.0000D+01                          2  ISI
    9  EPST-PND     - CONSTANT -    5.0000D-03                          3  ISI
   10  ASTAR-PND    - CONSTANT -   -2.4000D-01                          4  ISI
   11  ANUU-PND     - CONSTANT -    3.0000D+00                          5  ISI
   12  HOURS/CY     NORMAL   YES    7.4473D+03   1.0500D+00    1.00    1  SSC
   13  PRESSURE     NORMAL   NO     1.8000D+00   1.5000D-02     .00    2  SSC
   14  STRESS-SS    NORMAL   YES    5.1470D+00   1.2589D+00     .00    3  SSC
   15  SCC-COEFF    NORMAL   YES    3.5900D-13   2.3714D+00     .00    4  SSC
   16  SCC-EXPNT    - CONSTANT -    2.1610D+00                          5  SSC
   17  SCC-TIMEI    - CONSTANT -    1.0000D+00                          6  SSC
   18  ECW-RATE     NORMAL   YES    6.3700D-07   2.3714D+00     .00    7  SSC
   19  NOFTRS/HR    - CONSTANT -    6.0000D+01                          1  TRC
   20  STRESS-FT    NORMAL   YES    6.4337D-02   1.4125D+00     .00    2  TRC
   21  NOSTRS/CY    - CONSTANT -    1.3000D+01                          3  TRC
   22  STRESS-ST    NORMAL   YES    6.4337D+00   1.2589D+00    1.00    4  TRC
   23  FCG-COEFF    NORMAL   YES    1.2017D-11   2.8508D+00    1.00    5  TRC
   24  FCG-EXPNT    - CONSTANT -    3.7000D+00                          6  TRC
   25  FCG-THOLD    - CONSTANT -    3.5000D+00                          7  TRC
   26  LIMIT-DSL    - CONSTANT -    0.0000D+00                          1  FMD
   27  LIMIT-PBS    NORMAL   NO     6.4337D+01   3.2000D+00   -1.00    2  FMD
   28  STRESS-DL    NORMAL   YES    1.0294D+01   1.4125D+00    1.00    3  FMD
   29  FREQ-DLTR    - CONSTANT -    1.0000D-03                          4  FMD

    PROBABILITIES OF FAILURE MODE: EXCEED FLOW STRESS LIMIT FOR FULL BREAK

              NUMBER FAILED =    0              NUMBER OF TRIALS =  5000

  END OF      FAILURE PROBABILITY WITHOUT  AND  WITH IN-SERVICE INSPECTION
   CYCLE       FOR PERIOD       CUM. TOTAL       FOR PERIOD       CUM. TOTAL

     .0      3.50552D-11      3.50552D-11      3.50552D-11      3.50552D-11
   40.0      0.00000D+00      3.50552D-11      0.00000D+00      3.50552D-11
```

Table C-7

RCS-7

Piping Structural Reliability Estimates for Millstone Unit No. 3

System: Reactor Coolant System	Segment: RCS-7	Sheet of
P&ID No.: 12179-EM-102A R10	Data Point: 1021	
Pipe Stress Calculation Number: X7001B	PSI/Const. Method: VT-2, PT, UT/Hydro, PT,RT	
Piping Stress Isometric No.:	Proposed ISI Method: VT-2, UT	
Piping Component/Segment Element (weld, tee, elbow, etc.): Pipe weld at conn RCL		

No.	Input Parameter Description	Check Input Choice (for Table 1 Value)			Set Value*
1	Type of Piping Material	304 SS	316 SS	Carbon Steel	---
2	Temperature at Pipe Weld	Low (150)	Medium (350)	High (550)	600
3	Nominal Pipe Size	Small (2)	Medium (5)	Large (16)	10
4	Pipe Wall Thickness	Thin (.06)	Normal (.14)	Thick (.22)	.1
5	Normal Operating Pressure	Low (0.5)	Medium (1.3)	High (2.1)	2.5
6	Residual Stress Level	None (0.0)	Moderate (0.1)	Maximum (0.2)	.2
7	Initial Flaw Size	Small (.05)	Medium (.11)	Large (.17)	.05
8	Steady-State Stress Level	Low (.05)	Medium (.11)	High (.17)	.14
9	Stress Corrosion Potential	None (0.0)	Moderate (0.5)	Maximum (1.0)	0
10	Material Wastage Potential	None (0.0)	Moderate (0.5)	Maximum (1.0)	0
11	High Cycle Fatigue Loads	None (0.0)	Moderate (.08)	Maximum (.16)	.08
12	Fatigue Transient Loads	Low (.10)	Medium (.22)	High (.34)	.25
13	Fatigue Transient Frequency	Low (5)	Medium (13)	High (21)	5
14	Design-Limiting Stress (Break Only)	Low (.10)	Medium (.26)	High (.42)	.22
15	Optional Crack Inspection Interval	Low (6)	Medium (10)	High (14)	10
16	Optional crack Inspection Accuracy	High (.16)	Medium (.24)	Low (.32)	.24

*For optional numeric input, use a value (and associated units) from the standard range given in Table 1.

Small Leak Probability, No ISI: 1.85E-06	Optional Leak Probability With ISI: 1.30E-06
Full Break Probability, No ISI: 4.15E-09	Optional Break Probability With ISI: 3.44E-09

Comments: High usage factor. Branch is on Fatigue watch list.

Table C-8

RCS-7 SMALL LEAK PROBABILITY

STRUCTURAL RELIABILITY AND RISK ASSESSMENT (SRRA)
WESTINGHOUSE PROBABILITY OF FAILURE PROGRAM SPFMPROF ESBU-NTD

==========

INPUT VARIABLES FOR CASE 53: 316 STAINLESS STEEL PIPE WELD LEAK

NCYCLE =	40	NFAILS =	1000	NTRIAL =	5000
NOVARS =	29	NUMSET =	6	NUMISI =	5
NUMSSC =	7	NUMTRC =	7	NUMFMD =	4

VARIABLE NO.	NAME	DISTRIBUTION TYPE	LOG	MEDIAN VALUE	DEVIATION OR FACTOR	SHIFT MV/SD	USAGE NO.	SUB
1	PIPE-DIA	NORMAL	NO	1.0000D+01	5.0000D-02	.00	1	SET
2	WALL/DIA	NORMAL	NO	9.0000D-02	2.7000D-03	.00	2	SET
3	SRESIDUAL	NORMAL	YES	1.0318D+01	1.4125D+00	1.00	3	SET
4	INT%DEPTH	NORMAL	YES	5.0000D+00	1.4125D+00	1.00	4	SET
5	L/D-RATIO	NORMAL	YES	6.0000D+00	1.4125D+00	1.00	5	SET
6	PROB/VOL	- CONSTANT -		1.0000D-04			6	SET
7	FIRST-ISI	- CONSTANT -		5.0000D+00			1	ISI
8	FREQ-ISI	- CONSTANT -		1.0000D+01			2	ISI
9	EPST-PND	- CONSTANT -		1.0000D-03			3	ISI
10	ASTAR-PND	- CONSTANT -		-4.8000D-01			4	ISI
11	ANUU-PND	- CONSTANT -		1.6000D+00			5	ISI
12	HOURS/CY	NORMAL	YES	7.4473D+03	1.0500D+00	1.00	1	SSC
13	PRESSURE	NORMAL	NO	2.7000D+00	1.5000D-02	.00	2	SSC
14	STRESS-SS	NORMAL	YES	7.7003D+00	1.2589D+00	.00	3	SSC
15	SCC-COEFF	NORMAL	YES	3.2310D-12	2.3714D+00	1.00	4	SSC
16	SCC-EXPNT	- CONSTANT -		2.1610D+00			5	SSC
17	SCC-TIMEI	- CONSTANT -		1.0000D+00			6	SSC
18	ECW-RATE	NORMAL	YES	1.2740D-11	2.3714D+00	.00	7	SSC
19	NOFTRS/HR	- CONSTANT -		6.0000D+01			1	TRC
20	STRESS-FT	NORMAL	YES	4.1068D+00	1.4125D+00	.00	2	TRC
21	NOSTRS/CY	- CONSTANT -		5.0000D+00			3	TRC
22	STRESS-ST	NORMAL	YES	1.2834D+01	1.2589D+00	.00	4	TRC
23	FCG-COEFF	NORMAL	YES	9.1401D-12	2.8508D+00	1.00	5	TRC
24	FCG-EXPNT	- CONSTANT -		4.0000D+00			6	TRC
25	FCG-THOLD	- CONSTANT -		4.6000D+00			7	TRC
26	LIMIT-DSL	NORMAL	NO	-9.7000D-01	1.0000D-02	.00	1	FMD
27	LIMIT-PBS	- CONSTANT -		0.0000D+00			2	FMD
28	STRESS-DL	- CONSTANT -		0.0000D+00			3	FMD
29	FREQ-DLTR	- CONSTANT -		0.0000D+00			4	FMD

PROBABILITIES OF FAILURE MODE: EXCEED LIMITING DEPTH FOR SMALL LEAK

NUMBER FAILED = 38 NUMBER OF TRIALS = 5000

END OF CYCLE	FAILURE PROBABILITY WITHOUT AND WITH IN-SERVICE INSPECTION FOR PERIOD	CUM. TOTAL	FOR PERIOD	CUM. TOTAL
2.0	8.94271D-10	8.94271D-10	8.94271D-10	8.94271D-10
3.0	1.01876D-08	1.10818D-08	1.01876D-08	1.10818D-08
4.0	5.04658D-08	6.15476D-08	5.04658D-08	6.15476D-08
5.0	9.95457D-08	1.61093D-07	9.95457D-08	1.61093D-07
6.0	3.65580D-08	1.97651D-07	7.38916D-09	1.68482D-07
7.0	1.34157D-09	1.98993D-07	8.06409D-10	1.69289D-07

Table C-8 (cont.)

RCS-7 SMALL LEAK PROBABILITY

8.0	2.70362D-09	2.01697D-07	2.26866D-09	1.71558D-07
9.0	2.09142D-10	2.01906D-07	1.21163D-10	1.71679D-07
10.0	4.51808D-07	6.53714D-07	4.44936D-07	6.16614D-07
11.0	2.28950D-07	8.82664D-07	2.25890D-07	8.42504D-07
12.0	1.13720D-08	8.94036D-07	1.11866D-08	8.53691D-07
14.0	5.01018D-08	9.44137D-07	4.95022D-08	9.03193D-07
18.0	3.38555D-08	9.77993D-07	1.21196D-08	9.15312D-07
19.0	1.49986D-09	9.79493D-07	8.09079D-10	9.16122D-07
21.0	5.88162D-09	9.85374D-07	4.88857D-09	9.21010D-07
26.0	3.87838D-07	1.37321D-06	7.42869D-08	9.95297D-07
28.0	2.32675D-08	1.39648D-06	2.60714D-09	9.97904D-07
35.0	3.64726D-07	1.76121D-06	2.94839D-07	1.29274D-06
36.0	8.99882D-08	1.85119D-06	4.59765D-09	1.29734D-06
40.0	0.00000D+00	1.85119D-06	0.00000D+00	1.29734D-06
	DEVIATION ON CUMULATIVE TOTALS =		2.99190D-07	2.50752D-07

Table C-9

RCS-7 FULL BREAK PROBABILITY

```
                    STRUCTURAL RELIABILITY AND RISK ASSESSMENT (SRRA)
WESTINGHOUSE           PROBABILITY OF FAILURE PROGRAM SPFMPROF          ESBU-NTD

==============================================================================
     INPUT VARIABLES FOR CASE 54: 316 STAINLESS STEEL PIPE WELD BREAK

       NCYCLE =    40            NFAILS =  1000            NTRIAL =  5000
       NOVARS =    29            NUMSET =     6            NUMISI =     5
       NUMSSC =     7            NUMTRC =     7            NUMFMD =     4

   VARIABLE          DISTRIBUTION      MEDIAN       DEVIATION     SHIFT    USAGE
  NO.   NAME         TYPE     LOG       VALUE       OR FACTOR     MV/SD   NO. SUB

   1  PIPE-DIA      NORMAL    NO     1.0000D+01    5.0000D-02      .00    1  SET
   2  WALL/DIA      NORMAL    NO     9.0000D-02    2.7000D-03      .00    2  SET
   3  SRESIDUAL     NORMAL    YES    1.0318D+01    1.4125D+00     1.00    3  SET
   4  INT%DEPTH     NORMAL    YES    5.0000D+00    1.4125D+00     1.00    4  SET
   5  L/D-RATIO     NORMAL    YES    6.0000D+00    1.4125D+00     1.00    5  SET
   6  PROB/VOL      - CONSTANT -     1.0000D-04                           6  SET
   7  FIRST-ISI     - CONSTANT -     5.0000D+00                           1  ISI
   8  FREQ-ISI      - CONSTANT -     1.0000D+01                           2  ISI
   9  EPST-PND      - CONSTANT -     1.0000D-03                           3  ISI
  10  ASTAR-PND     - CONSTANT -    -4.8000D-01                           4  ISI
  11  ANUU-PND      - CONSTANT -     1.6000D+00                           5  ISI
  12  HOURS/CY      NORMAL    YES    7.4473D+03    1.0500D+00     1.00    1  SSC
  13  PRESSURE      NORMAL    NO     2.7000D+00    1.5000D-02      .00    2  SSC
  14  STRESS-SS     NORMAL    YES    7.70[illegible]00    1.2589D+00      .00    3  SSC
  15  SCC-COEFF     NORMAL    YES    3.23[illegible]    2.3714D+00     1.00    4  SSC
  16  SCC-EXPNT     - CONSTANT -     2.1[illegible]                       5  SSC
  17  SCC-TIMEI     - CONSTANT -     1.00[illegible]00                    6  SSC
  18  ECW-RATE      NORMAL    YES    1.2740D-11    2.3714D+00      .00    7  SSC
  19  NOFTRS/HR     - CONSTANT -     6.0000D+01                           1  TRC
  20  STRESS-FT     NORMAL    YES    4.1068D+00    1.4125D+00      .00    2  TRC
  21  NOSTRS/CY     - CONSTANT -     5.0000D+00                           3  TRC
  22  STRESS-ST     NORMAL    YES    1.2834D+01    1.2589D+00      .00    4  TRC
  23  FCG-COEFF     NORMAL    YES    9.1401D-12    2.8508D+00     1.00    5  TRC
  24  FCG-EXPNT     - CONSTANT -     4.0000D+00                           6  TRC
  25  FCG-THOLD     - CONSTANT -     4.6000D+00                           7  TRC
  26  LIMIT-DSL     - CONSTANT -     0.0000D+00                           1  FMD
  27  LIMIT-PBS     NORMAL    NO     5.1336D+01    3.2000D+00    -1.00    2  FMD
  28  STRESS-DL     NORMAL    YES    1.1807D+01    1.4125D+00     1.00    3  FMD
  29  FREQ-DLTR     - CONSTANT -     1.0000D-03                           4  FMD

   PROBABILITIES OF FAILURE MODE: EXCEED FLOW STRESS LIMIT FOR FULL BREAK

              NUMBER FAILED =   40              NUMBER OF TRIALS =  5000

  END OF     FAILURE PROBABILITY WITHOUT  AND  WITH IN-SERVICE INSPECTION
   CYCLE      FOR PERIOD        CUM. TOTAL       FOR PERIOD        CUM. TOTAL

    3.0      3.32838D-12       3.32838D-12      3.32838D-12       3.32838D-12
    4.0      4.56267D-14       3.37400D-12      4.56267D-14       3.37400D-12
    5.0      1.11528D-09       1.11865D-09      1.11528D-09       1.11865D-09
    6.0      1.80913D-12       1.12046D-09      8.92447D-14       1.11874D-09
    7.0      5.08248D-10       1.62871D-09      1.35968D-10       1.25471D-09
    8.0      8.65115D-13       1.62957D-09      2.01630D-13       1.25491D-09
```

Table C-9 (cont.)

RCS-7 FULL BREAK PROBABILITY

9.0	3.43633D-12	1.63301D-09	2.85746D-12	1.25777D-09
10.0	1.16420D-11	1.64465D-09	9.38850D-12	1.26716D-09
11.0	3.90819D-10	2.03547D-09	3.83862D-10	1.65102D-09
13.0	9.94750D-11	2.13495D-09	9.90966D-11	1.75011D-09
14.0	1.13095D-12	2.13608D-09	1.00875D-12	1.75112D-09
15.0	2.06633D-12	2.13814D-09	2.05977D-12	1.75318D-09
17.0	1.40478D-12	2.13955D-09	6.68420D-14	1.75325D-09
19.0	3.61956D-11	2.17574D-09	8.23173D-12	1.76148D-09
20.0	2.13062D-11	2.19705D-09	8.09302D-12	1.76957D-09
22.0	3.36388D-12	2.20041D-09	1.92871D-12	1.77150D-09
24.0	1.90910D-09	4.10951D-09	1.66636D-09	3.43786D-09
26.0	3.11303D-11	4.14064D-09	1.30261D-12	3.43917D-09
30.0	8.01516D-12	4.14866D-09	1.98107D-12	3.44115D-09
40.0	0.00000D+00	4.14866D-09	0.00000D+00	3.44115D-09
	DEVIATION ON CUMULATIVE TOTALS =		6.53396D-10	5.95488D-10

Table C-10

RCS-15

Piping Structural Reliability Estimates for Millstone Unit No. 3

System: Reactor Coolant System	Segment: RCS-15	Sheet of
P&ID No.: 12179-EM-102D R4	Data Point: 530	
Pipe Stress Calculation Number: X10702	PSI/Const. Method: VT-2, PT/Hydro, PT, RT	
Piping Stress Isometric No.:	Proposed ISI Method: VT-2, RT	
Piping Component/Segment Element (weld, tee, elbow, etc.): Weld to V70		

No.	Input Parameter Description	Check Input Choice (for Table 1 Value)			Set Value*
1	Type of Piping Material	304 SS	316 SS	Carbon Steel	---
2	Temperature at Pipe Weld	Low (150)	Medium (350)	High (550)	600
3	Nominal Pipe Size	Small (2)	Medium (5)	Large (16)	1.5
4	Pipe Wall Thickness	Thin (.06)	Normal (.14)	Thick (.22)	.14
5	Normal Operating Pressure	Low (0.5)	Medium (1.3)	High (2.1)	2.5
6	Residual Stress Level	None (0.0)	Moderate (0.1)	Maximum (0.2)	.2
7	Initial Flaw Size	Small (.05)	Medium (.11)	Large (.17)	.05
8	Steady-State Stress Level	Low (.05)	Medium (.11)	High (.17)	.11
9	Stress Corrosion Potential	None (0.0)	Moderate (0.5)	Maximum (1.0)	0
10	Material Wastage Potential	None (0.0)	Moderate (0.5)	Maximum (1.0)	0
11	High Cycle Fatigue Loads	None (0.0)	Moderate (.08)	Maximum (.16)	0
12	Fatigue Transient Loads	Low (.10)	Medium (.22)	High (.34)	.16
13	Fatigue Transient Frequency	Low (5)	Medium (13)	High (21)	5
14	Design-Limiting Stress (Break Only)	Low (.10)	Medium (.26)	High (.42)	.22
15	Optional Crack Inspection Interval	Low (6)	Medium (10)	High (14)	10
16	Optional crack Inspection Accuracy	High (.16)	Medium (.24)	Low (.32)	.16

*For optional numeric input, use a value (and associated units) from the standard range given in Table 1.

Small Leak Probability, No ISI: 0 (1.7E-10)	Optional Leak Probability With ISI: 0 (1.7E-10)
Full Break Probability, No ISI: 1.47E-12	Optional Break Probability With ISI: 1.47E-12

Comments: Area of maximum bending stress. SR el at 535/540 & tee at 550 are on fatigue watch list.

Table C-11

RCS-15 SMALL LEAK PROBABILITY

STRUCTURAL RELIABILITY AND RISK ASSESSMENT (SRRA)
WESTINGHOUSE PROBABILITY OF FAILURE PROGRAM SPFMPROF ESBU-NTD

INPUT VARIABLES FOR CASE 67: 316 STAINLESS STEEL PIPE WELD LEAK

NCYCLE = 40 NFAILS = 1000 NTRIAL = 5000
NOVARS = 29 NUMSET = 6 NUMISI = 5
NUMSSC = 7 NUMTRC = 7 NUMFMD = 4

VARIABLE NO.	NAME	DISTRIBUTION TYPE	LOG	MEDIAN VALUE	DEVIATION OR FACTOR	SHIFT MV/SD	USAGE NO.	SUB
1	PIPE-DIA	NORMAL	NO	1.5000D+00	7.5000D-03	.00	1	SET
2	WALL/DIA	NORMAL	NO	1.5000D-01	4.5000D-03	.00	2	SET
3	SRESIDUAL	NORMAL	YES	1.0318D+01	1.4125D+00	1.00	3	SET
4	INT%DEPTH	NORMAL	YES	5.0000D+00	1.4125D+00	1.00	4	SET
5	L/D-RATIO	NORMAL	YES	6.0000D+00	1.4125D+00	1.00	5	SET
6	PROB/VOL	- CONSTANT -		1.0000D-04			6	SET
7	FIRST-ISI	- CONSTANT -		5.0000D+00			1	ISI
8	FREQ-ISI	- CONSTANT -		1.0000D+01			2	ISI
9	EPST-PND	- CONSTANT -		1.0000D-03			3	ISI
10	ASTAR-PND	- CONSTANT -		-3.2000D-01			4	ISI
11	ANUU-PND	- CONSTANT -		1.6000D+00			5	ISI
12	HOURS/CY	NORMAL	YES	7.4473D+03	1.0500D+00	1.00	1	SSC
13	PRESSURE	NORMAL	NO	2.7250D+00	1.5000D-02	.00	2	SSC
14	STRESS-SS	NORMAL	YES	5.6469D+00	1.2589D+00	.00	3	SSC
15	SCC-COEFF	NORMAL	YES	3.2310D-12	2.3714D+00	1.00	4	SSC
16	SCC-EXPNT	- CONSTANT -		2.1610D+00			5	SSC
17	SCC-TIMEI	- CONSTANT -		1.0000D+00			6	SSC
18	ECW-RATE	NORMAL	YES	1.2740D-11	2.3714D+00	.00	7	SSC
19	NOFTRS/HR	- CONSTANT -		6.0000D+01			1	TRC
20	STRESS-FT	NORMAL	YES	5.1336D-02	1.4125D+00	.00	2	TRC
21	NOSTRS/CY	- CONSTANT -		5.0000D+00			3	TRC
22	STRESS-ST	NORMAL	YES	8.7271D+00	1.2589D+00	.00	4	TRC
23	FCG-COEFF	NORMAL	YES	9.1401D-12	2.8508D+00	1.00	5	TRC
24	FCG-EXPNT	- CONSTANT -		4.0000D+00			6	TRC
25	FCG-THOLD	- CONSTANT -		4.6000D+00			7	TRC
26	LIMIT-DSL	NORMAL	NO	-9.7000D-01	1.0000D-02	.00	1	FMD
27	LIMIT-PBS	- CONSTANT -		0.0000D+00			2	FMD
28	STRESS-DL	- CONSTANT -		0.0000D+00			3	FMD
29	FREQ-DLTR	- CONSTANT -		0.0000D+00			4	FMD

PROBABILITIES OF FAILURE MODE: EXCEED LIMITING DEPTH FOR SMALL LEAK

NUMBER FAILED = 0 NUMBER OF TRIALS = 5000

END OF CYCLE	FAILURE PROBABILITY WITHOUT AND WITH IN-SERVICE INSPECTION FOR PERIOD	CUM. TOTAL	FOR PERIOD	CUM. TOTAL
.0	1.66284D-10	1.66284D-10	1.66284D-10	1.66284D-10
40.0	0.00000D+00	1.66284D-10	0.00000D+00	1.66284D-10

Table C-12

RCS-15 FULL BREAK PROBABILITY

STRUCTURAL RELIABILITY AND RISK ASSESSMENT (SRRA)
WESTINGHOUSE PROBABILITY OF FAILURE PROGRAM SPFMPROF ESBU-NTD

INPUT VARIABLES FOR CASE 68: 316 STAINLESS STEEL PIPE WELD BREAK

NCYCLE =	40	NFAILS =	1000	NTRIAL =	5000
NOVARS =	29	NUMSET =	6	NUMISI =	5
NUMSSC =	7	NUMTRC =	7	NUMFMD =	4

VARIABLE NO.	NAME	DISTRIBUTION TYPE	LOG	MEDIAN VALUE	DEVIATION OR FACTOR	SHIFT MV/SD	USAGE NO.	SUB
1	PIPE-DIA	NORMAL	NO	1.5000D+00	7.5000D-03	.00	1	SET
2	WALL/DIA	NORMAL	NO	1.5000D-01	4.5000D-03	.00	2	SET
3	SRESIDUAL	NORMAL	YES	1.0318D+01	1.4125D+00	1.00	3	SET
4	INT%DEPTH	NORMAL	YES	5.0000D+00	1.4125D+00	1.00	4	SET
5	L/D-RATIO	NORMAL	YES	6.0000D+00	1.4125D+00	1.00	5	SET
6	PROB/VOL	- CONSTANT -		1.0000D-04			6	SET
7	FIRST-ISI	- CONSTANT -		5.0000D+00			1	ISI
8	FREQ-ISI	- CONSTANT -		1.0000D+01			2	ISI
9	EPST-PND	- CONSTANT -		1.0000D-03			3	ISI
10	ASTAR-PND	- CONSTANT -		-3.2000D-01			4	ISI
11	ANUU-PND	- CONSTANT -		1.6000D+00			5	ISI
12	HOURS/CY	NORMAL	YES	7.4473D+03	1.0500D+00	1.00	1	SSC
13	PRESSURE	NORMAL	NO	2.7250D+00	1.5000D-02	.00	2	SSC
14	STRESS-SS	NORMAL	YES	5.6469D+00	1.2589D+00	.00	3	SSC
15	SCC-COEFF	NORMAL	YES	3.2310D-12	2.3714D+00	1.00	4	SSC
16	SCC-EXPNT	- CONSTANT -		2.1610D+00			5	SSC
17	SCC-TIMEI	- CONSTANT -		1.0000D+00			6	SSC
18	ECW-RATE	NORMAL	YES	1.2740D-11	2.3714D+00	.00	7	SSC
19	NOFTRS/HR	- CONSTANT -		6.0000D+01			1	TRC
20	STRESS-FT	NORMAL	YES	5.1336D-02	1.4125D+00	.00	2	TRC
21	NOSTRS/CY	- CONSTANT -		5.0000D+00			3	TRC
22	STRESS-ST	NORMAL	YES	8.7271D+00	1.2589D+00	.00	4	TRC
23	FCG-COEFF	NORMAL	YES	9.1401D-12	2.8508D+00	1.00	5	TRC
24	FCG-EXPNT	- CONSTANT -		4.0000D+00			6	TRC
25	FCG-THOLD	- CONSTANT -		4.6000D+00			7	TRC
26	LIMIT-DSL	- CONSTANT -		0.0000D+00			1	FMD
27	LIMIT-PBS	NORMAL	NO	5.1336D+01	3.2000D+00	-1.00	2	FMD
28	STRESS-DL	NORMAL	YES	1.1294D+01	1.4125D+00	1.00	3	FMD
29	FREQ-DLTR	- CONSTANT -		1.0000D-03			4	FMD

PROBABILITIES OF FAILURE MODE: EXCEED FLOW STRESS LIMIT FOR FULL BREAK

NUMBER FAILED = 1 NUMBER OF TRIALS = 5000

END OF CYCLE	FAILURE PROBABILITY WITHOUT AND WITH IN-SERVICE INSPECTION FOR PERIOD	CUM. TOTAL	FOR PERIOD	CUM. TOTAL
1.0	1.46947D-12	1.46947D-12	1.46947D-12	1.46947D-12
40.0	0.00000D+00	1.46947D-12	0.00000D+00	1.46947D-12
	DEVIATION ON CUMULATIVE TOTALS =		1.46947D-12	1.46947D-12

Table C-13 SIL-9					
Piping Structural Reliability Estimates for Millstone Unit No. 3					
System: Low Pressure Safety Injection		Segment: SIL-9			Sheet of
P&ID No.: EM-112B		Data Point: 95			
Pipe Stress Calculation Number: 7001B		PSI/Const. Method: VT-2, UT, PT/Hydro, RT			
Piping Stress Isometric No.:		Proposed ISI Method: VT-2, UT			
Piping Component/Segment Element (weld, tee, elbow, etc.): Valve/pipe weld					
No.	**Input Parameter Description**	**Check Input Choice (for Table 1 Value)**			**Set Value***
1	Type of Piping Material	304 SS	316 SS	Carbon Steel	---
2	Temperature at Pipe Weld	Low (150)	Medium (350)	High (550)	350
3	Nominal Pipe Size	Small (2)	Medium (5)	Large (16)	10
4	Pipe Wall Thickness	Thin (.06)	Normal (.14)	Thick (.22)	.1
5	Normal Operating Pressure	Low (0.5)	Medium (1.3)	High (2.1)	.7
6	Residual Stress Level	None (0.0)	Moderate (0.1)	Maximum (0.2)	.2
7	Initial Flaw Size	Small (.05)	Medium (.11)	Large (.17)	.05
8	Steady-State Stress Level	Low (.05)	Medium (.11)	High (.17)	.11
9	Stress Corrosion Potential	None (0.0)	Moderate (0.5)	Maximum (1.0)	0
10	Material Wastage Potential	None (0.0)	Moderate (0.5)	Maximum (1.0)	0
11	High Cycle Fatigue Loads	None (0.0)	Moderate (.08)	Maximum (.16)	0
12	Fatigue Transient Loads	Low (.10)	Medium (.22)	High (.34)	.1
13	Fatigue Transient Frequency	Low (5)	Medium (13)	High (21)	5
14	Design-Limiting Stress (Break Only)	Low (.10)	Medium (.26)	High (.42)	.09
15	Optional Crack Inspection Interval	Low (6)	Medium (10)	High (14)	10
16	Optional crack Inspection Accuracy	High (.16)	Medium (.24)	Low (.32)	.16
*For optional numeric input, use a value (and associated units) from the standard range given in Table 1.					
Small Leak Probability, No ISI: 0 (2.5E-08)		Optional Leak Probability With ISI: 0 (2.5E-08)			
Full Break Probability, No ISI: 0 (9.2E-12)		Optional Break Probability With ISI: 0 (9.2E-12)			
Comments: Location based on potential check valve leakage causing thermal cycling.					

Table C-14

SIL-9 SMALL LEAK PROBABILITY

```
                    STRUCTURAL RELIABILITY AND RISK ASSESSMENT (SRRA)
WESTINGHOUSE           PROBABILITY OF FAILURE PROGRAM SPFMPROF          ESBU-NTD

==============================================================================
     INPUT VARIABLES FOR CASE 18: 316 STAINLESS STEEL PIPE WELD LEAK

     NCYCLE =    40          NFAILS =  1000          NTRIAL =  5000
     NOVARS =    29          NUMSET =     6          NUMISI =     5
     NUMSSC =     7          NUMTRC =     7          NUMFMD =     4
```

VARIABLE NO.	NAME	DISTRIBUTION TYPE	LOG	MEDIAN VALUE	DEVIATION OR FACTOR	SHIFT MV/SD	USAGE NO.	SUB
1	PIPE-DIA	NORMAL	NO	1.0000D+01	5.0000D-02	.00	1	SET
2	WALL/DIA	NORMAL	NO	1.0000D-01	3.0000D-03	.00	2	SET
3	SRESIDUAL	NORMAL	YES	1.2357D+01	1.4125D+00	1.00	3	SET
4	INT%DEPTH	NORMAL	YES	5.0000D+00	1.4125D+00	1.00	4	SET
5	L/D-RATIO	NORMAL	YES	6.0000D+00	1.4125D+00	1.00	5	SET
6	PROB/VOL	- CONSTANT -		1.0000D-04			6	SET
7	FIRST-ISI	- CONSTANT -		5.0000D+00			1	ISI
8	FREQ-ISI	- CONSTANT -		1.0000D+01			2	ISI
9	EPST-PND	- CONSTANT -		1.0000D-03			3	ISI
10	ASTAR-PND	- CONSTANT -		-3.2000D-01			4	ISI
11	ANUU-PND	- CONSTANT -		1.6000D+00			5	ISI
12	HOURS/CY	NORMAL	YES	7.4473D+03	1.0500D+00	1.00	1	SSC
13	PRESSURE	NORMAL	NO	7.0000D-01	1.5000D-02	.00	2	SSC
14	STRESS-SS	NORMAL	YES	6.1783D+00	1.2589D+00	.00	3	SSC
15	SCC-COEFF	NORMAL	YES	3.2310D-12	2.3714D+00	1.00	4	SSC
16	SCC-EXPNT	- CONSTANT -		2.1610D+00			5	SSC
17	SCC-TIMEI	- CONSTANT -		1.0000D+00			6	SSC
18	ECW-RATE	NORMAL	YES	1.2740D-11	2.3714D+00	.00	7	SSC
19	NOFTRS/HR	- CONSTANT -		6.0000D+01			1	TRC
20	STRESS-FT	NORMAL	YES	6.1783D-02	1.4125D+00	.00	2	TRC
21	NOSTRS/CY	- CONSTANT -		5.0000D+00			3	TRC
22	STRESS-ST	NORMAL	YES	6.1783D+00	1.2589D+00	.00	4	TRC
23	FCG-COEFF	NORMAL	YES	9.1401D-12	2.8508D+00	1.00	5	TRC
24	FCG-EXPNT	- CONSTANT -		4.0000D+00			6	TRC
25	FCG-THOLD	- CONSTANT -		4.6000D+00			7	TRC
26	LIMIT-DSL	NORMAL	NO	-9.7000D-01	1.0000D-02	.00	1	FMD
27	LIMIT-PBS	- CONSTANT -		0.0000D+00			2	FMD
28	STRESS-DL	- CONSTANT -		0.0000D+00			3	FMD
29	FREQ-DLTR	- CONSTANT -		0.0000D+00			4	FMD

PROBABILITIES OF FAILURE MODE: EXCEED LIMITING DEPTH FOR SMALL LEAK

NUMBER FAILED = 0 NUMBER OF TRIALS = 5000

END OF CYCLE	FAILURE PROBABILITY WITHOUT AND WITH IN-SERVICE INSPECTION FOR PERIOD	CUM. TOTAL	FOR PERIOD	CUM. TOTAL
.0	2.50257D-08	2.50257D-08	2.50257D-08	2.50257D-08
40.0	0.00000D+00	2.50257D-08	0.00000D+00	2.50257D-08

Table C-15

SIL-9 FULL BREAK PROBABILITY

STRUCTURAL RELIABILITY AND RISK ASSESSMENT (SRRA)
WESTINGHOUSE PROBABILITY OF FAILURE PROGRAM SPFMPROF ESBU-NTD

INPUT VARIABLES FOR CASE 17: 316 STAINLESS STEEL PIPE WELD BREAK

NCYCLE = 40 NFAILS = 1000 NTRIAL = 5000
NOVARS = 29 NUMSET = 6 NUMISI = 5
NUMSSC = 7 NUMTRC = 7 NUMFMD = 4

VARIABLE NO.	NAME	DISTRIBUTION TYPE	LOG	MEDIAN VALUE	DEVIATION OR FACTOR	SHIFT MV/SD	USAGE NO.	SUB
1	PIPE-DIA	NORMAL	NO	1.0000D+01	5.0000D-02	.00	1	SET
2	WALL/DIA	NORMAL	NO	1.0000D-01	3.0000D-03	.00	2	SET
3	SRESIDUAL	NORMAL	YES	1.2357D+01	1.4125D+00	1.00	3	SET
4	INT%DEPTH	NORMAL	YES	5.0000D+00	1.4125D+00	1.00	4	SET
5	L/D-RATIO	NORMAL	YES	6.0000D+00	1.4125D+00	1.00	5	SET
6	PROB/VOL	- CONSTANT -		1.0000D-04			6	SET
7	FIRST-ISI	- CONSTANT -		5.0000D+00			1	ISI
8	FREQ-ISI	- CONSTANT -		1.0000D+01			2	ISI
9	EPST-PND	- CONSTANT -		1.0000D-03			3	ISI
10	ASTAR-PND	- CONSTANT -		-3.2000D-01			4	ISI
11	ANUU-PND	- CONSTANT -		1.6000D+00			5	ISI
12	HOURS/CY	NORMAL	YES	7.4473D+03	1.0500D+00	1.00	1	SSC
13	PRESSURE	NORMAL	NO	7.0000D-01	1.5000D-02	.00	2	SSC
14	STRESS-SS	NORMAL	YES	6.1783D+00	1.2589D+00	.00	3	SSC
15	SCC-COEFF	NORMAL	YES	3.2310D-12	2.3714D+00	1.00	4	SSC
16	SCC-EXPNT	- CONSTANT -		2.1610D+00			5	SSC
17	SCC-TIMEI	- CONSTANT -		1.0000D+00			6	SSC
18	ECW-RATE	NORMAL	YES	1.2740D-11	2.3714D+00	.00	7	SSC
19	NOFTRS/HR	- CONSTANT -		6.0000D+01			1	TRC
20	STRESS-FT	NORMAL	YES	6.1783D-02	1.4125D+00	.00	2	TRC
21	NOSTRS/CY	- CONSTANT -		5.0000D+00			3	TRC
22	STRESS-ST	NORMAL	YES	6.1783D+00	1.2589D+00	.00	4	TRC
23	FCG-COEFF	NORMAL	YES	9.1401D-12	2.8508D+00	1.00	5	TRC
24	FCG-EXPNT	- CONSTANT -		4.0000D+00			6	TRC
25	FCG-THOLD	- CONSTANT -		4.6000D+00			7	TRC
26	LIMIT-DSL	- CONSTANT -		0.0000D+00			1	FMD
27	LIMIT-PBS	NORMAL	NO	6.1783D+01	3.2000D+00	-1.00	2	FMD
28	STRESS-DL	NORMAL	YES	5.5605D+00	1.4125D+00	1.00	3	FMD
29	FREQ-DLTR	- CONSTANT -		1.0000D-03			4	FMD

PROBABILITIES OF FAILURE MODE: EXCEED FLOW STRESS LIMIT FOR FULL BREAK

NUMBER FAILED = 0 NUMBER OF TRIALS = 5000

END OF CYCLE	FAILURE PROBABILITY WITHOUT AND WITH IN-SERVICE INSPECTION FOR PERIOD	CUM. TOTAL	FOR PERIOD	CUM. TOTAL
.0	9.20644D-12	9.20644D-12	9.20644D-12	9.20644D-12
40.0	0.00000D+00	9.20644D-12	0.00000D+00	9.20644D-12

Table C-16

PIPING SEGMENT ECC-03 FAILURE PROBABILITY WORKSHEET

Surry Unit 1

System: ECC Segment: ECCS-001,002,003 Failure Mode(s): Thermal Stratification/a Location: Welds 1-04; 1-05- 1-05 Drawings 127J1; 127J2; 127J3

No.	Input Parameter Description	Circle Choice or Set Value			Set Value	Basis
1	Type of Piping Material	304SS	316SS	Carbon Steel		Drawing/Spec.
2	Crack Inspection Interval (optional)	Low(6)	Medium(10)	High(14)		Section XI
3	Crack Inspection Accuracy (optional)	High(.16)	Medium(.24)	Low(.32)		UT
4	Temperature at Pipe Weld	Low(150)	Medium(350)	High(550)	170	Line List
5	Nominal Pipe Size	Small(2)	Medium(5)	Large(16)	6	Drawing
6	Thickness to O.D. Ratio	Thin(.05)	Normal(.13)	Thick(.21)	.085	Calc.
7	Normal Operating Pressure	Low(0.5)	Medium(1.3)	High(2.1)	2.52	Line List
8	Residual Stress Level	None(0.0)	Moderate(10)	Maximum(20)		Thick Wall
9	Initial Flaw Conditions	One Flaw	X-Ray NDE	No X-Ray	.15	Spec.
10	DW & Thermal Stress Level	Low(.05)	Medium(.11)	High(.17)		Calc.
11	Stress Corrosion Potential	None(0.0)	Moderate(0.5)	Maximum(1.0)		Judgment
12	Material Wastage Potential	None(0.0)	Moderate(0.5)	Maximum(1.0)		Judgment
13	Vibratory Stress Range	None(0.0)	Moderate(1.5)	Maximum(3.0)		Judgment
14	Fatigue Stress Range	Low(.30)	Medium(.50)	High(.70)	.6	Stratification
15	Low Cycle Fatigue Frequency	Low(10)	Medium(20)	High(30)		Stratification
16	Design Limiting Stress (LL/Break Only)	Low(.10)	Medium(.26)	High(.42)	.214	Calc.
17	System Disabling Leak (Large Leak Only)	None(0)	Medium(300)	High(600)	2	Assumed Small
18	Min. Detectable Leak (LL/Break Only)	None(0)	Medium(5)	High(10)	1	T.S. Limit

No Leak Detection
Small Leak Prob., No ISI: 8.6721E-4 Small Leak Prob., With ISI: 9.3484E-5
Large Leak Prob., No ISI: 8.2946E-4 Large Leak Prob., With ISI: 2.9107E-5 (N/A if not applicable)
Break Prob., No ISI: N/A Break Prob., With ISI: N/A (N/A if not applicable)

No Leak Detection(Snubber locking up under Thermal Conditions, Item 14 set at N/A .)(Snubber failure probability set at N/A .)(N/A if not applicable)
Small Leak Prob., No ISI: Small Leak Prob., With ISI: (N/A if not applicable)
Large Leak Prob., No ISI: Large Leak Prob., With ISI: (N/A if not applicable)
Break Prob., No ISI: Break Prob., With ISI: (N/A if not applicable)

No Leak Detection(Snubber not locking up under Seismic Conditions, Item 16 set at N/A .)(Snubber failure probability set at N/A .)(N/A if not applicable)
Large Leak Prob., No ISI: Large Leak Prob., With ISI: (N/A if not applicable)
Break Prob., No ISI: Break Prob., With ISI: (N/A if not applicable)

Leak Detection (with Snubber failure if most limiting)
Large Leak Prob., No ISI: 1.7060E-4 Large Leak Prob., With ISI: 3.9150E-5 (N/A if not applicable)
Break Prob., No ISI: N/A Break Prob., With ISI: N/A (N/A if not applicable)

Comments:
Assumed some check valve back leakage.
No snubbers.

Table C-17

PIPING SEGMENT ECC-03 SMALL LEAK FAILURE PROBABILITY

SRRA MODEL OUTPUT

Output Print File S6PROFSL.P74 Opened at 12:39 on 04-06-1997

Type of Piping Steel Material	316 St
Pipe Weld Failure Mode	Small Leak
Years Between Inspections	10.0
Wall Fraction for 50% Detection	0.240
Degrees (F) at Pipe Weld	170.0
Nominal Pipe Size (NPS, inch)	6.0
Thickness / Outside Diameter	0.0850
Operating Pressure (ksi)	2.52
Uniform Residual Stress (ksi)	20.0
Flaw Factor (<0 for 1 Flaw)	1.00
DW & Thermal Stress / Flow Stress	0.15
SCC Rate / Rate for BWR Sens. SS	0.00
Factor on Wastage of .0095 in/yr	0.00
P-P Vib. Stress (ksi for NPS of 1)	0.0
Cyclic Stress Range / Flow Stress	0.600
Fatigue Cycles per Year	30.0
Design-Limit Stress / Flow Stress	0.214
System Disabling Leak Rate (GPM)	2.0
Minimum Detectable Leak Rate (GPM)	0.0
Value of Weld Metal Flow Stress in Ksi	69.30

STRUCTURAL RELIABILITY AND RISK ASSESSMENT (SRRA)
WESTINGHOUSE PROBABILITY OF FAILURE PROGRAM LEAKPROF ESBU-NSD

INPUT VARIABLES FOR CASE 74: 316 St Steel Pipe Segment ECCS-1;2;3

NCYCLE =	40	NFAILS =	400	NTRIAL =	40000
NOVARS =	28	NUMSET =	6	NUMISI =	5
NUMSSC =	6	NUMTRC =	6	NUMFMD =	5

VARIABLE NO.	NAME	DISTRIBUTION TYPE	LOG	MEDIAN VALUE	DEVIATION OR FACTOR	SHIFT MV/SD	USAGE NO.	SUB
1	PIPE-ODIA	NORMAL	NO	6.62[illegible]	[illegible]4000D-02	.00	1	SET
2	WALL/ODIA	NORMAL	NO	8.50[illegible]	[illegible]9350D-03	.00	2	SET
3	SRESIDUAL	NORMAL	YES	2.0[illegible]	[illegible].4142D+00	.00	3	SET
4	INT%DEPTH	NORMAL	YES	1.70[illegible]	1.3000D+00	2.00	4	SET
5	L/D-RATIO	NORMAL	YES	6.0000D+00	1.7126D+00	1.00	5	SET
6	FLAWS/IN	- CONSTANT -		3.1824D-03			6	SET
7	FIRST-ISI	- CONSTANT -		5.0000D+00			1	ISI
8	FREQ-ISI	- CONSTANT -		1.0000D+01			2	ISI
9	EPST-PND	- CONSTANT -		1.0000D-03			3	ISI
10	ASTAR-PND	- CONSTANT -		-2.4000D-01			4	ISI
11	ANUU-PND	- CONSTANT -		1.6000D+00			5	ISI
12	HOURS/YR	NORMAL	YES	7.4473D+03	1.0500D+00	.00	1	SSC
13	PRESSURE	NORMAL	YES	2.5200D+00	1.0323D+00	.00	2	SSC
14	SIG-DW&TH	NORMAL	YES	1.0396D+01	1.2599D+00	.00	3	SSC
15	SCC-COEFF	NORMAL	YES	3.2310D-12	2.3714D+00	.00	4	SSC
16	SCC-EXPNT	- CONSTANT -		2.1610D+00			5	SSC
17	WASTAGE	NORMAL	YES	1.2740D-12	2.3714D+00	.00	6	SSC
18	DSIG-VIBR	NORMAL	YES	3.6957D-04	1.3465D+00	.00	1	TRC
19	CYCLES/YR	- CONSTANT -		3.0000D+01			2	TRC
20	DSIG-FATG	NORMAL	YES	4.1583D+01	1.4142D+00	.00	3	TRC
21	FCG-COEFF	NORMAL	YES	9.1401D-12	2.8508D+00	1.00	4	TRC
22	FCG-EXPNT	- CONSTANT -		4.0000D+00			5	TRC
23	FCG-THOLD	- CONSTANT -		1.5000D+00			6	TRC
24	LDEPTH-SL	- CONSTANT -		-9.9900D-01			1	FMD
25	SIG-FLOW	NORMAL	NO	6.9305D+01	3.2000D+00	.00	2	FMD

Table C-17 (cont.)

PIPING SEGMENT ECC-03 SMALL LEAK FAILURE PROBABILITY

SRRA MODEL OUTPUT

26	STRESS-DL	- CONSTANT -	0.0000D+00	3	FMD
27	B-SDLEAK	- CONSTANT -	0.0000D+00	4	FMD
28	B-MDLEAK	- CONSTANT -	0.0000D+00	5	FMD

PROBABILITIES OF FAILURE MODE: THROUGH-WALL CRACK DEPTH FOR SMALL LEAK

NUMBER FAILED = 400 NUMBER OF TRIALS = 1434

END OF YEAR	FAILURE PROBABILITY WITHOUT AND WITH IN-SERVICE INSPECTIONS FOR PERIOD	CUM. TOTAL	FOR PERIOD	CUM. TOTAL
1.0	3.33174D-07	3.33174D-07	3.33174D-07	3.33174D-07
2.0	2.03029D-06	2.36346D-06	2.03029D-06	2.36346D-06
3.0	4.10166D-06	6.46512D-06	4.10166D-06	6.46512D-06
4.0	9.73175D-06	1.61969D-05	9.73175D-06	1.61969D-05
5.0	6.27881D-06	2.24757D-05	6.27881D-06	2.24757D-05
6.0	3.95266D-06	2.64283D-05	1.62860D-08	2.24920D-05
7.0	4.15186D-05	6.79470D-05	1.02527D-06	2.35172D-05
8.0	8.23812D-06	7.61851D-05	6.65005D-07	2.41822D-05
9.0	1.76040D-05	9.37891D-05	2.78993D-06	2.69722D-05
10.0	1.28268D-05	1.06616D-04	1.81927D-06	2.87914D-05
11.0	9.21463D-06	1.15831D-04	1.58895D-06	3.03804D-05
12.0	1.78327D-06	1.17614D-04	3.21503D-07	3.07019D-05
13.0	4.69119D-05	1.64526D-04	1.94242D-05	5.01261D-05
14.0	1.09636D-05	1.75489D-04	1.66996D-06	5.17960D-05
15.0	3.15074D-06	1.78640D-04	4.52273D-07	5.22483D-05
16.0	6.41339D-06	1.85053D-04	4.70735D-09	5.22530D-05
17.0	9.60630D-06	1.94660D-04	1.55363D-08	5.22685D-05
18.0	2.02292D-05	2.14889D-04	4.78133D-08	5.23163D-05
19.0	3.19268D-06	2.18082D-04	2.35846D-08	5.23399D-05
20.0	2.82963D-05	2.46378D-04	2.15177D-07	5.25551D-05
21.0	7.09890D-05	3.17367D-04	4.98744D-06	5.75426D-05
22.0	3.46832D-05	3.52050D-04	2.11425D-06	5.96568D-05
23.0	5.00152D-06	3.57052D-04	7.55603D-08	5.97324D-05
24.0	1.91289D-04	5.48341D-04	3.01475D-05	8.98799D-05
25.0	1.17773D-05	5.60118D-04	2.50270D-07	9.01302D-05
26.0	1.03270D-05	5.70445D-04	1.07175D-09	9.01312D-05
27.0	2.66519D-05	5.97097D-04	2.41576D-09	9.01337D-05
28.0	3.00766D-05	6.27174D-04	2.26497D-08	9.01563D-05
29.0	1.16294D-05	6.38803D-04	3.81798D-09	9.01601D-05
30.0	1.07793D-05	6.49582D-04	1.77431D-08	9.01779D-05
31.0	1.25231D-05	6.62106D-04	5.14971D-08	9.02294D-05
32.0	1.35489D-04	7.97595D-04	3.17955D-06	9.34089D-05
33.0	7.24468D-06	8.04839D-04	1.68088D-08	9.34257D-05
34.0	1.45223D-05	8.19362D-04	5.00140D-08	9.34757D-05
35.0	2.91615D-06	8.22278D-04	7.79099D-09	9.34835D-05
36.0	3.79121D-06	8.26069D-04	2.85712D-12	9.34835D-05
37.0	1.21935D-05	8.38263D-04	2.78377D-10	9.34838D-05
38.0	1.63821D-05	8.54645D-04	2.95726D-10	9.34841D-05
39.0	9.24489D-06	8.63890D-04	1.65187D-10	9.34843D-05
40.0	3.32089D-06	8.67211D-04	6.68250D-10	9.34849D-05
	DEVIATION ON CUMULATIVE TOTALS =		3.68325D-05	1.40257D-05

Table C-18

PIPING SEGMENT ECC-03 LARGE LEAK FAILURE PROBABILITY

SRRA MODEL OUTPUT

Output Print File S6PROFLL.P75 Opened at 12:41 on 04-06-1997

Type of Piping Steel Material	316 St
Pipe Weld Failure Mode	Large Leak
Years Between Inspections	10.0
Wall Fraction for 50% Detection	0.240
Degrees (F) at Pipe Weld	170.0
Nominal Pipe Size (NPS, inch)	6.0
Thickness / Outside Diameter	0.0850
Operating Pressure (ksi)	2.52
Uniform Residual Stress (ksi)	20.0
Flaw Factor (<0 for 1 Flaw)	1.00
DW & Thermal Stress / Flow Stress	0.15
SCC Rate / Rate for BWR Sens. SS	0.00
Factor on Wastage of .0095 in/yr	0.00
P-P Vib. Stress (ksi for NPS of 1)	0.0
Cyclic Stress Range / Flow Stress	0.600
Fatigue Cycles per Year	30.0
Design-Limit Stress / Flow Stress	0.214
System Disabling Leak Rate (GPM)	2.0
Minimum Detectable Leak Rate (GPM)	0.0
Value of Weld Metal Flow Stress in Ksi	69.30

STRUCTURAL RELIABILITY AND RISK ASSESSMENT (SRRA)
WESTINGHOUSE PROBABILITY OF FAILURE PROGRAM LEAKPROF ESBU-NSD

INPUT VARIABLES FOR CASE 75: 316 St Steel Pipe Segment ECCS-1;2;3

NCYCLE =	40	NFAILS =	400	NTRIAL =	50000
NOVARS =	28	NUMSET =	6	NUMISI =	5
NUMSSC =	6	NUMTRC =	6	NUMFMD =	5

VARIABLE NO.	NAME	DISTRIBUTION TYPE	LOG	MEDIAN VALUE	DEVIATION OR FACTOR	SHIFT MV/SD	USAGE NO.	SUB
1	PIPE-ODIA	NORMAL	NO	6.6250D+00	2.4000D-02	.00	1	SET
2	WALL/ODIA	NORMAL	NO	8.5000D-02	2.6350D-03	.00	2	SET
3	SRESIDUAL	NORMAL	YES	2.0000D+01	1.4142D+00	.00	3	SET
4	INT%DEPTH	NORMAL	YES	1.7036D+01	1.3000D+00	2.00	4	SET
5	L/D-RATIO	NORMAL	YES	6.0000D+00	1.7126D+00	2.00	5	SET
6	FLAWS/IN	- CONSTANT -		3.1824D-03			6	SET
7	FIRST-ISI	- CONSTANT -		5.0000D+00			1	ISI
8	FREQ-ISI	- CONSTANT -		1.0000D+01			2	ISI
9	EPST-PND	- CONSTANT -		1.0000D-03			3	ISI
10	ASTAR-PND	- CONSTANT -		-2.4000D-01			4	ISI
11	ANUU-PND	- CONSTANT -		1.6000D+00			5	ISI
12	HOURS/YR	NORMAL	YES	7.4473D+03	1.0500D+00	.00	1	SSC
13	PRESSURE	NORMAL	YES	2.5200D+00	1.0323D+00	.00	2	SSC
14	SIG-DW&TH	NORMAL	YES	1.0396D+01	1.2599D+00	.00	3	SSC
15	SCC-COEFF	NORMAL	YES	3.2310D-12	2.3714D+00	.00	4	SSC
16	SCC-EXPNT	- CONSTANT -		2.1610D+00			5	SSC
17	WASTAGE	NORMAL	YES	1.2740D-12	2.3714D+00	.00	6	SSC
18	DSIG-VIBR	NORMAL	YES	3.6957D-04	1.3465D+00	.00	1	TRC
19	CYCLES/YR	- CONSTANT -		3.0000D+01			2	TRC
20	DSIG-FATG	NORMAL	YES	4.1583D+01	1.4142D+00	.00	3	TRC
21	FCG-COEFF	NORMAL	YES	9.1401D-12	2.8508D+00	1.00	4	TRC
22	FCG-EXPNT	- CONSTANT -		4.0000D+00			5	TRC
23	FCG-THOLD	- CONSTANT -		1.5000D+00			6	TRC
24	LDEPTH-SL	- CONSTANT -		0.0000D+00			1	FMD
25	SIG-FLOW	NORMAL	NO	6.9305D+01	3.2000D+00	.00	2	FMD

Table C-18 (cont.)

PIPING SEGMENT ECC-03 LARGE LEAK FAILURE PROBABILITY

SRRA MODEL OUTPUT

26	STRESS-DL	NORMAL	YES	1.4831D+01	1.4142D+00	.00	3	FMD
27	B-SDLEAK	- CONSTANT -		2.2905D+00			4	FMD
28	B-MDLEAK	- CONSTANT -		2.0813D+01			5	FMD

PROBABILITIES OF FAILURE MODE: EXCEED DISABLING LEAK RATE OR BREAK

NUMBER FAILED = 400 NUMBER OF TRIALS = 1080

END OF YEAR	FAILURE PROBABILITY WITHOUT FOR PERIOD	CUM. TOTAL	AND WITH IN-SERVICE INSPECTIONS FOR PERIOD	CUM. TOTAL
1.0	6.85050D-10	6.85050D-10	6.85050D-10	6.85050D-10
2.0	4.82361D-07	4.83046D-07	4.82361D-07	4.83046D-07
3.0	1.11163D-06	1.59468D-06	1.11163D-06	1.59468D-06
4.0	1.35354D-06	2.94822D-06	1.35354D-06	2.94822D-06
5.0	5.35139D-06	8.29961D-06	5.35139D-06	8.29961D-06
6.0	1.01833D-05	1.84829D-05	3.86722D-08	8.33828D-06
7.0	5.49637D-06	2.39793D-05	4.59385D-08	8.38422D-06
8.0	2.44516D-06	2.64244D-05	1.80675D-07	8.56489D-06
9.0	1.51599D-05	4.15843D-05	1.53256D-06	1.00975D-05
10.0	3.02920D-06	4.46135D-05	1.93047D-07	1.02905D-05
11.0	3.71388D-05	8.17523D-05	7.63772D-06	1.79282D-05
12.0	5.32324D-06	8.70756D-05	6.81228D-07	1.86094D-05
13.0	1.59366D-06	8.86692D-05	2.23921D-07	1.88334D-05
14.0	8.74582D-07	8.95438D-05	2.18981D-07	1.90523D-05
15.0	4.75332D-06	9.42971D-05	7.77180D-07	1.98295D-05
16.0	1.87714D-06	9.61743D-05	2.49049D-09	1.98320D-05
17.0	1.82364D-06	9.79979D-05	2.35864D-09	1.98344D-05
18.0	9.00252D-05	1.88023D-04	3.14905D-07	2.01493D-05
19.0	5.02576D-06	1.93049D-04	1.64228D-08	2.01657D-05
20.0	6.48377D-06	1.99533D-04	2.00995D-07	2.03667D-05
21.0	5.90433D-06	2.05437D-04	3.37695D-08	2.04005D-05
22.0	3.76407D-05	2.43078D-04	9.45213D-07	2.13457D-05
23.0	2.79445D-06	2.45872D-04	1.29279D-07	2.14750D-05
24.0	3.21681D-07	2.46194D-04	8.29237D-09	2.14832D-05
25.0	2.80427D-05	2.74237D-04	8.86767D-07	2.23700D-05
26.0	1.20452D-05	2.86282D-04	4.29405D-09	2.23743D-05
27.0	6.67115D-06	2.92953D-04	2.90591D-09	2.23772D-05
28.0	1.68871D-05	3.09840D-04	6.63992D-09	2.23839D-05
29.0	1.87029D-05	3.28543D-04	3.59089D-08	2.24198D-05
30.0	1.05176D-04	4.33719D-04	1.47313D-07	2.25671D-05
31.0	3.32383D-07	4.34051D-04	1.85115D-10	2.25673D-05
32.0	1.92613D-05	4.53312D-04	6.41891D-08	2.26315D-05
33.0	4.28478D-06	4.57597D-04	6.01387D-09	2.26375D-05
34.0	7.43054D-07	4.58340D-04	2.48666D-09	2.26400D-05
35.0	2.69008D-04	7.27348D-04	6.46442D-06	2.91044D-05
36.0	9.34558D-06	7.36694D-04	1.61980D-10	2.91045D-05
37.0	8.55671D-05	8.22261D-04	2.67804D-09	2.91072D-05
38.0	3.05548D-06	8.25316D-04	3.92740D-10	2.91076D-05
39.0	4.14694D-06	8.29463D-04	1.53305D-10	2.91078D-05
40.0	0.00000D+00	8.29463D-04	0.00000D+00	2.91078D-05
	DEVIATION ON CUMULATIVE TOTALS =		3.29239D-05	7.72206D-06

Table C-19

PIPING SEGMENT FW-12 FAILURE PROBABILITY WORKSHEET

Surry Unit 1

System: FW Segment: FW-012, 013, 014 Failure Mode(s): Wastage Location: Pipe to FCV 1478, 1488, 1498 Drawing 1018 A3

No.	Input Parameter Description	Circle Choice or Set Value			Set Value	Basis
1	Type of Piping Material	304SS	316SS	Carbon Steel		Drawing/Spec
2	Crack Inspection Interval (optional)	Low(6)	Medium(10)	High(14)		Section XI
3	Crack Inspection Accuracy (optional)	High(.16)	Medium(.24)	Low(.32)		UT
4	Temperature at Pipe Weld	Low(150)	Medium(350)	High(550)		Line List
5	Nominal Pipe Size	Small(2)	Medium(5)	Large(16)	435	Drawing
6	Thickness to O.D. Ratio	Thin(.05)	Normal(.13)	Thick(.21)	14	Calc.
7	Normal Operating Pressure	Low(0.5)	Medium(1.3)	High(2.1)	.054	Line List
8	Residual Stress Level	None(0.0)	Moderate(10)	Maximum(20)	.9	Stress Relieved
9	Initial Flaw Conditions	One Flaw	X-Ray NDE	No X-Ray		Spec.
10	DW & Thermal Stress Level	Low(.05)	Medium(.11)	High(.17)	.283	Code Allowables
11	Stress Corrosion Potential	None(0.0)	Moderate(0.5)	Maximum(1.0)		Judgment
12	Material Wastage Potential	None(0.0)	Moderate(0.5)	Maximum(1.0)	1.5	Some Wastage
13	Vibratory Stress Range	None(0.0)	Moderate(1.5)	Maximum(3.0)		Judgment
14	Fatigue Stress Range	Low(.30)	Medium(.50)	High(.70)		Judgment
15	Low Cycle Fatigue Frequency	Low(10)	Medium(20)	High(30)		Judgment
16	Design Limiting Stress (LL/Break Only)	Low(.10)	Medium(.26)	High(.42)	.21	Code Allowables
17	System Disabling Leak (Large Leak Only)	None(0)	Medium(300)	High(600)	500	Condensate Makeup
18	Min. Detectable Leak (LL/Break Only)	None(0)	Medium(5)	High(10)	1	Accessible Area

No Leak Detection
Small Leak Prob., No ISI: 3.6003E-1 Small Leak Prob., With ISI: 4.0763E-3
*Large Leak Prob., No ISI: 3.6003E-1 Large Leak Prob., With ISI: 4.0763E-3 (N/A if not applicable)
Break Prob., No ISI: N/A Break Prob., With ISI: N/A (N/A if not applicable)

No Leak Detection(Snubber locking up under Thermal Conditions, Item 14 set at .7 .)(Snubber failure probability set at 10% .)(N/A if not applicable)
Small Leak Prob., No ISI: 3.6068E-2 Small Leak Prob., With ISI: 4.0739E-4 (N/A if not applicable)
Large Leak Prob., No ISI: 3.6068E-2 Large Leak Prob., With ISI: 4.0739E-4 (N/A if not applicable)
Break Prob., No ISI: N/A Break Prob., With ISI: N/A (N/A if not applicable)

No Leak Detection(Snubber not locking up under Seismic Conditions, Item 16 set at .5 .)(Snubber failure probability set at 10% .)(N/A if not applicable)
Large Leak Prob., No ISI: 3.6003E-2 Large Leak Prob., With ISI: 4.0763E-4 (N/A if not applicable)
Break Prob., No ISI: N/A Break Prob., With ISI: N/A (N/A if not applicable)

Leak Detection (with Snubber failure if most limiting)
*Large Leak Prob., No ISI: 3.6003E-1 Large Leak Prob., With ISI: 4.0763E-3 (N/A if not applicable)
Break Prob., No ISI: N/A Break Prob., With ISI: N/A (N/A if not applicable)

Comments:
Code Allowables used.

Table C-20

PIPING SEGMENT FW-12 SMALL LEAK FAILURE PROBABILITY

SRRA MODEL OUTPUT

Output Print File CSPROFSL.P32 Opened at 09:02 on 04-06-1997

Type of Piping Steel Material	Carbon
Pipe Weld Failure Mode	Small Leak
Years Between Inspections	10.0
Wall Fraction for 50% Detection	0.240
Degrees (F) at Pipe Weld	435.0
Nominal Pipe Size (NPS, inch)	14.0
Thickness / Outside Diameter	0.0540
Operating Pressure (ksi)	0.90
Uniform Residual Stress (ksi)	0.0
Flaw Factor (<0 for 1 Flaw)	12.80
DW & Thermal Stress / Flow Stress	0.28
SCC Rate / Rate for BWR Sens. SS	0.00
Factor on Wastage of .0095 in/yr	1.50
P-P Vib. Stress (ksi for NPS of 1)	0.0
Cyclic Stress Range / Flow Stress	0.500
Fatigue Cycles per Year	10.0
Design-Limit Stress / Flow Stress	0.210
System Disabling Leak Rate (GPM)	500.0
Minimum Detectable Leak Rate (GPM)	0.0
Value of Weld Metal Flow Stress in Ksi	64.80

STRUCTURAL RELIABILITY AND RISK ASSESSMENT (SRRA)
WESTINGHOUSE PROBABILITY OF FAILURE PROGRAM LEAKPROF ESBU-NSD

INPUT VARIABLES FOR CASE 32: Carbon Steel Pipe Segment FW-12;13;14

NCYCLE = 40 NFAILS = 400 NTRIAL = 10000
NOVARS = 28 NUMSET = 6 NUMISI = 5
NUMSSC = 6 NUMTRC = 6 NUMFMD = 5

VARIABLE NO.	NAME	DISTRIBUTION TYPE	LOG	MEDIAN VALUE	DEVIATION OR FACTOR	SHIFT MV/SD	USAGE NO.	SUB
1	PIPE-ODIA	NORMAL	NO	1.4000D+01	3.2000D-02	.00	1	SET
2	WALL/ODIA	NORMAL	NO	5.4000D-02	1.6740D-03	.00	2	SET
3	SRESIDUAL	NORMAL	YES	1.0000D-03	1.4142D+00	.00	3	SET
4	INT%DEPTH	NORMAL	YES	7.9536D+00	1.5516D+00	.00	4	SET
5	L/D-RATIO	NORMAL	YES	6.0000D+00	1.7126D+00	.00	5	SET
6	FLAWS/IN	- CONSTANT -		3.2504D-02			6	SET
7	FIRST-ISI	- CONSTANT -		5.0000D+00			1	ISI
8	FREQ-ISI	- CONSTANT -		1.0000D+01			2	ISI
9	EPST-PND	- CONSTANT -		5.0000D-03			3	ISI
10	ASTAR-PND	- CONSTANT -		-2.4000D-01			4	ISI
11	ANUU-PND	- CONSTANT -		3.0000D+00			5	ISI
12	HOURS/YR	NORMAL	YES	7.4473D+03	1.0500D+00	.00	1	SSC
13	PRESSURE	NORMAL	YES	9.0000D-01	1.0323D+00	.00	2	SSC
14	SIG-DW&TH	NORMAL	YES	1.8337D+01	1.2599D+00	.00	3	SSC
15	SCC-COEFF	NORMAL	YES	3.5900D-14	2.3714D+00	.00	4	SSC
16	SCC-EXPNT	- CONSTANT -		2.1610D+00			5	SSC
17	WASTAGE	NORMAL	YES	1.9110D-06	2.3714D+00	.00	6	SSC
18	DSIG-VIBR	NORMAL	YES	1.6667D-04	1.3465D+00	.00	1	TRC
19	CYCLES/YR	- CONSTANT -		1.0000D+01			2	TRC
20	DSIG-FATG	NORMAL	YES	3.2398D+01	1.4142D+00	.00	3	TRC
21	FCG-COEFF	NORMAL	YES	6.7931D-13	1.7194D+00	.00	4	TRC
22	FCG-EXPNT	- CONSTANT -		5.9500D+00			5	TRC
23	FCG-THOLD	- CONSTANT -		1.9000D+01			6	TRC
24	LDEPTH-SL	- CONSTANT -		-9.9900D-01			1	FMD
25	SIG-FLOW	NORMAL	NO	6.4797D+01	3.2000D+00	.00	2	FMD

Table C-20 (cont.)

PIPING SEGMENT FW-12 SMALL LEAK FAILURE PROBABILITY

SRRA MODEL OUTPUT

26	STRESS-DL	NORMAL	YES	1.3607D+01	1.4142D+00	.00	3	FMD
27	B-SDLEAK	- CONSTANT -		4.3982D+01			4	FMD
28	B-MDLEAK	- CONSTANT -		4.3982D+01			5	FMD

PROBABILITIES OF FAILURE MODE: SMALL OR LARGE LEAK OR BREAK BY WASTAGE

NUMBER FAILED = 400 NUMBER OF TRIALS = 1111

END OF YEAR	FAILURE PROBABILITY WITHOUT FOR PERIOD	CUM. TOTAL	AND WITH IN-SERVICE INSPECTIONS FOR PERIOD	CUM. TOTAL
2.0	9.00090D-04	9.00090D-04	9.00090D-04	9.00090D-04
3.0	9.00090D-04	1.80018D-03	9.00090D-04	1.80018D-03
4.0	9.00090D-04	2.70027D-03	9.00090D-04	2.70027D-03
6.0	2.70027D-03	5.40054D-03	1.35015D-05	2.71377D-03
7.0	4.50045D-03	9.90099D-03	2.25053D-05	2.73628D-03
8.0	3.60036D-03	1.35014D-02	1.80347D-05	2.75431D-03
9.0	6.30063D-03	1.98020D-02	3.20940D-05	2.78641D-03
10.0	5.40054D-03	2.52025D-02	2.95670D-05	2.81597D-03
11.0	7.20072D-03	3.24032D-02	4.80018D-05	2.86397D-03
12.0	6.30063D-03	3.87039D-02	5.77420D-05	2.92172D-03
13.0	4.50045D-03	4.32043D-02	8.24102D-05	3.00413D-03
14.0	3.60036D-03	4.68047D-02	1.11338D-04	3.11546D-03
15.0	1.08011D-02	5.76058D-02	7.06374D-04	3.82184D-03
16.0	1.08011D-02	6.84068D-02	5.97774D-06	3.82782D-03
17.0	9.90099D-03	7.83078D-02	8.39504D-06	3.83621D-03
18.0	1.53015D-02	9.36094D-02	1.86417D-05	3.85485D-03
19.0	6.30063D-03	9.99100D-02	9.40229D-06	3.86425D-03
20.0	6.30063D-03	1.06211D-01	1.25075D-05	3.87676D-03
21.0	1.08011D-02	1.17012D-01	2.56855D-05	3.90245D-03
22.0	1.53015D-02	1.32313D-01	4.27736D-05	3.94522D-03
23.0	1.08011D-02	1.43114D-01	3.39219D-05	3.97914D-03
24.0	1.08011D-02	1.53915D-01	3.48654D-05	4.01401D-03
25.0	1.53015D-02	1.69217D-01	5.80230D-05	4.07203D-03
26.0	1.53015D-02	1.84518D-01	2.93011D-07	4.07232D-03
27.0	1.17012D-02	1.96220D-01	2.59212D-07	4.07258D-03
28.0	1.71017D-02	2.13321D-01	3.85467D-07	4.07297D-03
29.0	8.10081D-03	2.21422D-01	1.98333D-07	4.07317D-03
30.0	1.17012D-02	2.33123D-01	3.10748D-07	4.07348D-03
31.0	9.90099D-03	2.43024D-01	2.85966D-07	4.07376D-03
32.0	1.44014D-02	2.57426D-01	4.77358D-07	4.07424D-03
33.0	1.17012D-02	2.69127D-01	4.43106D-07	4.07469D-03
34.0	1.53015D-02	2.84428D-01	6.72403D-07	4.07536D-03
35.0	1.80018D-02	3.02430D-01	9.64182D-07	4.07632D-03
36.0	1.26013D-02	3.15032D-01	4.13114D-09	4.07633D-03
37.0	7.20072D-03	3.22232D-01	2.97484D-09	4.07633D-03
38.0	1.26013D-02	3.34833D-01	6.19516D-09	4.07633D-03
39.0	1.53015D-02	3.50135D-01	9.67723D-09	4.07634D-03
40.0	9.90099D-03	3.60036D-01	7.49518D-09	4.07635D-03
	DEVIATION ON CUMULATIVE TOTALS =		1.44075D-02	1.91244D-03

Table C-21

PIPING SEGMENT FW-12 LARGE LEAK FAILURE PROBABILITY

SRRA MODEL OUTPUT

Output Print File CSPROFLL.P33 Opened at 09:04 on 04-06-1997

Type of Piping Steel Material	Carbon
Pipe Weld Failure Mode	Large Leak
Years Between Inspections	10.0
Wall Fraction for 50% Detection	0.240
Degrees (F) at Pipe Weld	435.0
Nominal Pipe Size (NPS, inch)	14.0
Thickness / Outside Diameter	0.0540
Operating Pressure (ksi)	0.90
Uniform Residual Stress (ksi)	0.0
Flaw Factor (<0 for 1 Flaw)	12.80
DW & Thermal Stress / Flow Stress	0.28
SCC Rate / Rate for BWR Sens. SS	0.00
Factor on Wastage of .0095 in/yr	1.50
P-P Vib. Stress (ksi for NPS of 1)	0.0
Cyclic Stress Range / Flow Stress	0.500
Fatigue Cycles per Year	10.0
Design-Limit Stress / Flow Stress	0.210
System Disabling Leak Rate (GPM)	500.0
Minimum Detectable Leak Rate (GPM)	0.0
Value of Weld Metal Flow Stress in Ksi	64.80

STRUCTURAL RELIABILITY AND RISK ASSESSMENT (SRRA)
WESTINGHOUSE PROBABILITY OF FAILURE PROGRAM LEAKPROF ESBU-NSD

INPUT VARIABLES FOR CASE 33: Carbon Steel Pipe Segment FW-12;13;14

NCYCLE = 40 NFAILS = 400 NTRIAL = 10000
NOVARS = 28 NUMSET = 6 NUMISI = 5
NUMSSC = 6 NUMTRC = 6 NUMFMD = 5

VARIABLE NO.	NAME	DISTRIBUTION TYPE	LOG	MEDIAN VALUE	DEVIATION OR FACTOR	SHIFT MV/SD	USAGE NO.	SUB
1	PIPE-ODIA	NORMAL	NO	1.4000D+01	3.2000D-02	.00	1	SET
2	WALL/ODIA	NORMAL	NO	5.4000D-02	1.6740D-03	.00	2	SET
3	SRESIDUAL	NORMAL	YES	1.0000D-03	1.4142D+00	.00	3	SET
4	INT%DEPTH	NORMAL	YES	7.9536D+00	1.5516D+00	.00	4	SET
5	L/D-RATIO	NORMAL	YES	6.0000D+00	1.7126D+00	.00	5	SET
6	FLAWS/IN	- CONSTANT -		3.2504D-02			6	SET
7	FIRST-ISI	- CONSTANT -		5.0000D+00			1	ISI
8	FREQ-ISI	- CONSTANT -		1.0000D+01			2	ISI
9	EPST-PND	- CONSTANT -		5.0000D-03			3	ISI
10	ASTAR-PND	- CONSTANT -		-2.4000D-01			4	ISI
11	ANUU-PND	- CONSTANT -		3.0000D+00			5	ISI
12	HOURS/YR	NORMAL	YES	7.4473D+03	1.0500D+00	.00	1	SSC
13	PRESSURE	NORMAL	YES	9.0000D-01	1.0323D+00	.00	2	SSC
14	SIG-DW&TH	NORMAL	YES	1.8337D+01	1.2599D+00	.00	3	SSC
15	SCC-COEFF	NORMAL	YES	3.5900D-14	2.3714D+00	.00	4	SSC
16	SCC-EXPNT	- CONSTANT -		2.1610D+00			5	SSC
17	WASTAGE	NORMAL	YES	1.9110D-06	2.3714D+00	.00	6	SSC
18	DSIG-VIBR	NORMAL	YES	1.6667D-04	1.3465D+00	.00	1	TRC
19	CYCLES/YR	- CONSTANT -		1.0000D+01			2	TRC
20	DSIG-FATG	NORMAL	YES	3.2398D+01	1.4142D+00	.00	3	TRC
21	FCG-COEFF	NORMAL	YES	6.7931D-13	1.7194D+00	.00	4	TRC
22	FCG-EXPNT	- CONSTANT -		5.9500D+00			5	TRC
23	FCG-THOLD	- CONSTANT -		1.9000D+01			6	TRC
24	LDEPTH-SL	- CONSTANT -		-9.9900D-01			1	FMD
25	SIG-FLOW	NORMAL	NO	6.4797D+01	3.2000D+00	.00	2	FMD

Table C-21 (cont.)

PIPING SEGMENT FW-12 LARGE LEAK FAILURE PROBABILITY

SRRA MODEL OUTPUT

26	STRESS-DL	NORMAL	YES	1.3607D+01	1.4142D+00	.00	3	FMD
27	B-SDLEAK	- CONSTANT -		1.5640D+01			4	FMD
28	B-MDLEAK	- CONSTANT -		4.3982D+01			5	FMD

PROBABILITIES OF FAILURE MODE: SMALL OR LARGE LEAK OR BREAK BY WASTAGE

NUMBER FAILED = 400 NUMBER OF TRIALS = 1111

END OF YEAR	FAILURE PROBABILITY WITHOUT FOR PERIOD	CUM. TOTAL	AND WITH IN-SERVICE INSPECTIONS FOR PERIOD	CUM. TOTAL
2.0	9.00090D-04	9.00090D-04	9.00090D-04	9.00090D-04
3.0	9.00090D-04	1.80018D-03	9.00090D-04	1.80018D-03
4.0	9.00090D-04	2.70027D-03	9.00090D-04	2.70027D-03
6.0	2.70027D-03	5.40054D-03	1.35015D-05	2.71377D-03
7.0	4.50045D-03	9.90099D-03	2.25053D-05	2.73628D-03
8.0	3.60036D-03	1.35014D-02	1.80347D-05	2.75431D-03
9.0	6.30063D-03	1.98020D-02	3.20940D-05	2.78641D-03
10.0	5.40054D-03	2.52025D-02	2.95670D-05	2.81597D-03
11.0	7.20072D-03	3.24032D-02	4.80018D-05	2.86397D-03
12.0	6.30063D-03	3.87039D-02	5.77420D-05	2.92172D-03
13.0	4.50045D-03	4.32043D-02	8.24102D-05	3.00413D-03
14.0	3.60036D-03	4.68047D-02	1.11338D-04	3.11546D-03
15.0	1.08011D-02	5.76058D-02	7.06374D-04	3.82184D-03
16.0	1.08011D-02	6.84068D-02	5.97774D-06	3.82782D-03
17.0	9.90099D-03	7.83078D-02	8.39504D-06	3.83621D-03
18.0	1.53015D-02	9.36094D-02	1.86417D-05	3.85485D-03
19.0	6.30063D-03	9.99100D-02	9.40229D-06	3.86425D-03
20.0	6.30063D-03	1.06211D-01	1.25075D-05	3.87676D-03
21.0	1.08011D-02	1.17012D-01	2.56855D-05	3.90245D-03
22.0	1.53015D-02	1.32313D-01	4.27736D-05	3.94522D-03
23.0	1.08011D-02	1.43114D-01	3.39219D-05	3.97914D-03
24.0	1.08011D-02	1.53915D-01	3.48654D-05	4.01401D-03
25.0	1.53015D-02	1.69217D-01	5.80230D-05	4.07203D-03
26.0	1.53015D-02	1.84518D-01	2.93011D-07	4.07232D-03
27.0	1.17012D-02	1.96220D-01	2.59212D-07	4.07258D-03
28.0	1.71017D-02	2.13321D-01	3.85467D-07	4.07297D-03
29.0	8.10081D-03	2.21422D-01	1.98333D-07	4.07317D-03
30.0	1.17012D-02	2.33123D-01	3.10748D-07	4.07348D-03
31.0	9.90099D-03	2.43024D-01	2.85966D-07	4.07376D-03
32.0	1.44014D-02	2.57426D-01	4.77358D-07	4.07424D-03
33.0	1.17012D-02	2.69127D-01	4.43106D-07	4.07469D-03
34.0	1.53015D-02	2.84428D-01	6.72403D-07	4.07536D-03
35.0	1.80018D-02	3.02430D-01	9.64182D-07	4.07632D-03
36.0	1.26013D-02	3.15032D-01	4.13114D-09	4.07633D-03
37.0	7.20072D-03	3.22232D-01	2.97484D-09	4.07633D-03
38.0	1.26013D-02	3.34833D-01	6.19516D-09	4.07633D-03
39.0	1.53015D-02	3.50135D-01	9.67723D-09	4.07634D-03
40.0	9.90099D-03	3.60036D-01	7.49518D-09	4.07635D-03
	DEVIATION ON CUMULATIVE TOTALS =		1.44075D-02	1.91244D-03

Table C-22
PIPING SEGMENT HHI-4C FAILURE PROBABILITY WORKSHEET

Surry Unit 1

System: HHI Segment: HHI-4C, 5C, 6C Failure Mode(s): Snubber Lock-up under Thermal Conditions Location: 4C - 1-04; 5C - 2-AM-A; 6C - 2-AV-A Drawings wmks: 1105B5; 1105B9

No.	Input Parameter Description	Circle Choice or Set Value			Set Value	Basis
1	Type of Piping Material	304SS	316SS	Carbon Steel		Drawing/Spec.
2	Crack Inspection Interval (optional)	Low(6)	Medium(10)	High(14)		Section XI
3	Crack Inspection Accuracy (optional)	High(.16)	Medium(.24)	Low(.32)		UT
4	Temperature at Pipe Weld	Low(150)	Medium(350)	High(550)	170	Line List
5	Nominal Pipe Size	Small(2)	Medium(5)	Large(16)	3	Drawing
6	Thickness to O.D. Ratio	Thin(.05)	Normal(.13)	Thick(.21)	.125	Calc.
7	Normal Operating Pressure	Low(0.5)	Medium(1.3)	High(2.1)	2.52	Line List
8	Residual Stress Level	None(0.0)	Moderate(10)	Maximum(20)		Judgment
9	Initial Flaw Conditions	One Flaw	X-Ray NDE	No X-Ray		Spec.
10	DW & Thermal Stress Level	Low(.05)	Medium(.11)	High(.17)	.132	Calc.
11	Stress Corrosion Potential	None(0.0)	Moderate(0.5)	Maximum(1.0)		Judgment
12	Material Wastage Potential	None(0.0)	Moderate(0.5)	Maximum(1.0)		Judgment
13	Vibratory Stress Range	None(0.0)	Moderate(1.5)	Maximum(3.0)		Judgment
14	Fatigue Stress Range	Low(.30)	Medium(.50)	High(.70)		Judgment
15	Low Cycle Fatigue Frequency	Low(10)	Medium(20)	High(30)		Judgment
16	Design Limiting Stress (LL/Break Only)	Low(.10)	Medium(.26)	High(.42)	.156	Calc.
17	System Disabling Leak (Large Leak Only)	None(0)	Medium(300)	High(600)	2	RWST Margin Small
18	Min. Detectable Leak (LL/Break Only)	None(0)	Medium(5)	High(10)	1	Accessible

No Leak Detection
Small Leak Prob., No ISI: 3.8711E-6 Small Leak Prob., With ISI: 1.4437E-7
Large Leak Prob., No ISI: 3.3010E-6 Large Leak Prob., With ISI: 7.1812E-8 (N/A if not applicable)
Break Prob., No ISI: N/A Break Prob., With ISI: N/A (N/A if not applicable)

No Leak Detection(Snubber locking up under Thermal Conditions, Item 14 set at .7 .)(Snubber failure probability set at 10% .)(N/A if not applicable)
Small Leak Prob., No ISI: 3.8839E-5 Small Leak Prob., With ISI: 2.7580E-6 (N/A if not applicable)
Large Leak Prob., No ISI: 2.6592E-5 Large Leak Prob., With ISI: 9.1390E-7 (N/A if not applicable)
Break Prob., No ISI: N/A Break Prob., With ISI: N/A (N/A if not applicable)

No Leak Detection(Snubber not locking up under Seismic Conditions, Item 16 set at .5 .)(Snubber failure probability set at 10% .)(N/A if not applicable)
*Large Leak Prob., No ISI: 1.5955E-5 Large Leak Prob., With ISI: 1.5501E-5 (N/A if not applicable)
Break Prob., No ISI: N/A Break Prob., With ISI: N/A (N/A if not applicable)

Leak Detection (withSnubber failure if most limiting)
*Large Leak Prob., No ISI: 1.0049E-5 Large Leak Prob., With ISI: 2.1156E-6 (N/A if not applicable) - Used Thermal Condition - set 14 to 0.7;
Break Prob., No ISI: N/A Break Prob., With ISI: N/A (N/A if not applicable) Apply 10%snubber failure probability

Comments:

Table C-23

PIPING SEGMENT HHI-4C SMALL LEAK FAILURE PROBABILITY

SRRA MODEL OUTPUT

Output Print File S4PROFSL.P33 Opened at 14:01 on 03-30-1997

Type of Piping Steel Material.	304 St
Pipe Weld Failure Mode	Small Leak
Years Between Inspections	10.0
Wall Fraction for 50% Detection	0.240
Degrees (F) at Pipe Weld	170.0
Nominal Pipe Size (NPS, inch)	3.0
Thickness / Outside Diameter	0.1250
Operating Pressure (ksi)	2.52
Uniform Residual Stress (ksi)	10.0
Flaw Factor (<0 for 1 Flaw)	1.00
DW & Thermal Stress / Flow Stress	0.13
SCC Rate / Rate for BWR Sens. SS	0.00
Factor on Wastage of .0095 in/yr	0.00
P-P Vib. Stress (ksi for NPS of 1)	0.8
Cyclic Stress Range / Flow Stress	0.300
Fatigue Cycles per Year	10.0
Design-Limit Stress / Flow Stress	0.156
System Disabling Leak Rate (GPM)	2.0
Minimum Detectable Leak Rate (GPM)	0.0
Value of Weld Metal Flow Stress in Ksi	69.30

STRUCTURAL RELIABILITY AND RISK ASSESSMENT (SRRA)
WESTINGHOUSE PROBABILITY OF FAILURE PROGRAM LEAKPROF ESBU-NSD

INPUT VARIABLES FOR CASE 33: 304 St Steel Pipe Segment HHI-4C;5C;6C

NCYCLE =	40	NFAILS =	400	NTRIAL =	40000
NOVARS =	28	NUMSET =	6	NUMISI =	5
NUMSSC =	6	NUMTRC =	6	NUMFMD =	5

VARIABLE NO.	NAME	DISTRIBUTION TYPE	LOG	MEDIAN VALUE	DEVIATION OR FACTOR	SHIFT MV/SD	USAGE NO.	SUB
1	PIPE-ODIA	NORMAL	NO	3.5000D+00	1.6000D-02	.00	1	SET
2	WALL/ODIA	NORMAL	NO	1.2500D-01	3.8750D-03	.00	2	SET
3	SRESIDUAL	NORMAL	YES	1.0000D+01	1.4142D+00	.00	3	SET
4	INT%DEPTH	NORMAL	YES	2.2310D+01	1.2544D+00	2.00	4	SET
5	L/D-RATIO	NORMAL	YES	6.0000D+00	1.7126D+00	1.00	5	SET
6	FLAWS/IN	- CONSTANT -		3.7371D-03			6	SET
7	FIRST-ISI	- CONSTANT -		5.0000D+00			1	ISI
8	FREQ-ISI	- CONSTANT -		1.0000D+01			2	ISI
9	EPST-PND	- CONSTANT -		1.0000D-03			3	ISI
10	ASTAR-PND	- CONSTANT -		-2.4000D-01			4	ISI
11	ANUU-PND	- CONSTANT -		1.6000D+00			5	ISI
12	HOURS/YR	NORMAL	YES	7.4473D+03	1.0500D+00	.00	1	SSC
13	PRESSURE	NORMAL	YES	2.5200D+00	1.0323D+00	.00	2	SSC
14	SIG-DW&TH	NORMAL	YES	9.1482D+00	1.2599D+00	.00	3	SSC
15	SCC-COEFF	NORMAL	YES	3.5900D-11	2.3714D+00	.00	4	SSC
16	SCC-EXPNT	- CONSTANT -		2.1610D+00			5	SSC
17	WASTAGE	NORMAL	YES	1.2740D-12	2.3714D+00	.00	6	SSC
18	DSIG-VIBR	NORMAL	YES	5.0366D-01	1.3465D+00	.00	1	TRC
19	CYCLES/YR	- CONSTANT -		1.0000D+01			2	TRC
20	DSIG-FATG	NORMAL	YES	2.0791D+01	1.4142D+00	.00	3	TRC
21	FCG-COEFF	NORMAL	YES	9.1401D-12	2.8508D+00	1.00	4	TRC
22	FCG-EXPNT	- CONSTANT -		4.0000D+00			5	TRC
23	FCG-THOLD	- CONSTANT -		1.5000D+00			6	TRC
24	LDEPTH-SL	- CONSTANT -		-9.9900D-01			1	FMD
25	SIG-FLOW	NORMAL	NO	6.9305D+01	3.2000D+00	.00	2	FMD

Table C-23 (cont.)

PIPING SEGMENT HHI-4C SMALL LEAK FAILURE PROBABILITY

SRRA MODEL OUTPUT

26	STRESS-DL	- CONSTANT -	0.0000D+00	3	FMD
27	B-SDLEAK	- CONSTANT -	0.0000D+00	4	FMD
28	B-MDLEAK	- CONSTANT -	0.0000D+00	5	FMD

PROBABILITIES OF FAILURE MODE: THROUGH-WALL CRACK DEPTH FOR SMALL LEAK

NUMBER FAILED = 400 NUMBER OF TRIALS = 20149

END OF YEAR	FAILURE PROBABILITY WITHOUT FOR PERIOD	CUM. TOTAL	AND WITH IN-SERVICE INSPECTIONS FOR PERIOD	CUM. TOTAL
1.0	7.79489D-09	7.79489D-09	7.79489D-09	7.79489D-09
2.0	9.46470D-09	1.72596D-08	9.46470D-09	1.72596D-08
3.0	3.13208D-11	1.72909D-08	3.13208D-11	1.72909D-08
4.0	3.78483D-10	1.76694D-08	3.78483D-10	1.76694D-08
5.0	8.63668D-08	1.04036D-07	8.63668D-08	1.04036D-07
6.0	1.46871D-08	1.18723D-07	5.86592D-11	1.04095D-07
7.0	2.80665D-08	1.46790D-07	5.87488D-10	1.04682D-07
8.0	1.58935D-09	1.48379D-07	1.00813D-11	1.04692D-07
9.0	1.57488D-08	1.64128D-07	2.59319D-10	1.04952D-07
10.0	8.30398D-09	1.72432D-07	1.31959D-10	1.05084D-07
11.0	6.77961D-08	2.40228D-07	3.15093D-09	1.08235D-07
12.0	2.99759D-09	2.43226D-07	1.38613D-10	1.08373D-07
13.0	6.69150D-08	3.10141D-07	1.84343D-08	1.26807D-07
14.0	5.88476D-09	3.16025D-07	2.34647D-10	1.27042D-07
15.0	9.38809D-08	4.09906D-07	1.24159D-08	1.39458D-07
16.0	5.27049D-08	4.62611D-07	1.27105D-11	1.39471D-07
17.0	4.44965D-08	5.07108D-07	4.34416D-11	1.39514D-07
18.0	4.55557D-08	5.52663D-07	8.66326D-12	1.39523D-07
19.0	4.81838D-08	6.00847D-07	7.22501D-11	1.39595D-07
20.0	9.55378D-08	6.96385D-07	1.03817D-09	1.40633D-07
21.0	3.44537D-09	6.99830D-07	2.80123D-12	1.40636D-07
22.0	1.60112D-07	8.59943D-07	7.51578D-10	1.41388D-07
23.0	1.15915D-07	9.75858D-07	5.23298D-10	1.41911D-07
24.0	1.40958D-07	1.11682D-06	2.09795D-09	1.44009D-07
25.0	6.55326D-08	1.18235D-06	1.81833D-10	1.44191D-07
26.0	1.74409D-07	1.35676D-06	5.09877D-12	1.44196D-07
27.0	3.60366D-07	1.71712D-06	1.85859D-11	1.44214D-07
28.0	2.89741D-07	2.00686D-06	6.00553D-11	1.44274D-07
29.0	3.11527D-08	2.03802D-06	3.80827D-13	1.44275D-07
30.0	1.73714D-07	2.21173D-06	1.32070D-11	1.44288D-07
31.0	2.68902D-08	2.23862D-06	1.75926D-12	1.44290D-07
32.0	5.69752D-08	2.29560D-06	1.90512D-12	1.44292D-07
33.0	1.45119D-07	2.44072D-06	6.53594D-11	1.44357D-07
34.0	3.58230D-08	2.47654D-06	2.42113D-12	1.44360D-07
35.0	2.00928D-07	2.67747D-06	1.64363D-11	1.44376D-07
36.0	4.85664D-07	3.16313D-06	1.47700D-12	1.44377D-07
37.0	6.99600D-08	3.23309D-06	1.34318D-14	1.44377D-07
38.0	1.76823D-07	3.40991D-06	7.48626D-14	1.44378D-07
39.0	2.99860D-07	3.70977D-06	8.16170D-13	1.44378D-07
40.0	1.61404D-07	3.87118D-06	5.55890D-13	1.44379D-07
DEVIATION ON CUMULATIVE TOTALS =			1.91633D-07	3.73674D-08

Table C-24
PIPING SEGMENT HHI-4C LARGE LEAK FAILURE PROBABILITY
SRRA MODEL OUTPUT

Output Print File S4PROFLL.P34 Opened at 14:03 on 03-30-1997

Type of Piping Steel Material	304 St
Pipe Weld Failure Mode	Large Leak
Years Between Inspections	10.0
Wall Fraction for 50% Detection	0.240
Degrees (F) at Pipe Weld	170.0
Nominal Pipe Size (NPS, inch)	3.0
Thickness / Outside Diameter	0.1250
Operating Pressure (ksi)	2.52
Uniform Residual Stress (ksi)	10.0
Flaw Factor (<0 for 1 Flaw)	1.00
DW & Thermal Stress / Flow Stress	0.13
SCC Rate / Rate for BWR Sens. SS	0.00
Factor on Wastage of .0095 in/yr	0.00
P-P Vib. Stress (ksi for NPS of 1)	0.8
Cyclic Stress Range / Flow Stress	0.300
Fatigue Cycles per Year	10.0
Design-Limit Stress / Flow Stress	0.156
System Disabling Leak Rate (GPM)	2.0
Minimum Detectable Leak Rate (GPM)	0.0
Value of Weld Metal Flow Stress in Ksi	69.30

STRUCTURAL RELIABILITY AND RISK ASSESSMENT (SRRA)
WESTINGHOUSE PROBABILITY OF FAILURE PROGRAM LEAKPROF ESBU-NSD

INPUT VARIABLES FOR CASE 34: 304 St Steel Pipe Segment HHI-4C;5C;6C

NCYCLE =	40	NFAILS =	400	NTRIAL =	50000
NOVARS =	28	NUMSET =	6	NUMISI =	5
NUMSSC =	6	NUMTRC =	6	NUMFMD =	5

VARIABLE NO.	NAME	DISTRIBUTION TYPE	LOG	MEDIAN VALUE	DEVIATION OR FACTOR	SHIFT MV/SD	USAGE NO.	SUB
1	PIPE-ODIA	NORMAL	NO	3.5000D+00	1.6000D-02	.00	1	SET
2	WALL/ODIA	NORMAL	NO	1.2500D-01	3.8750D-03	.00	2	SET
3	SRESIDUAL	NORMAL	YES	1.0000D+01	1.4142D+00	.00	3	SET
4	INT%DEPTH	NORMAL	YES	2.2310D+01	1.2544D+00	2.00	4	SET
5	L/D-RATIO	NORMAL	YES	6.0000D+00	1.7126D+00	2.00	5	SET
6	FLAWS/IN	- CONSTANT -		3.7371D-03			6	SET
7	FIRST-ISI	- CONSTANT -		5.0000D+00			1	ISI
8	FREQ-ISI	- CONSTANT -		1.0000D+01			2	ISI
9	EPST-PND	- CONSTANT -		1.0000D-03			3	ISI
10	ASTAR-PND	- CONSTANT -		-2.4000D-01			4	ISI
11	ANUU-PND	- CONSTANT -		1.6000D+00			5	ISI
12	HOURS/YR	NORMAL	YES	7.4473D+03	1.0500D+00	.00	1	SSC
13	PRESSURE	NORMAL	YES	2.5200D+00	1.0323D+00	.00	2	SSC
14	SIG-DW&TH	NORMAL	YES	9.1482D+00	1.2599D+00	.00	3	SSC
15	SCC-COEFF	NORMAL	YES	3.5900D-11	2.3714D+00	.00	4	SSC
16	SCC-EXPNT	- CONSTANT -		2.1610D+00			5	SSC
17	WASTAGE	NORMAL	YES	1.2740D-12	2.3714D+00	.00	6	SSC
18	DSIG-VIBR	NORMAL	YES	5.0366D-01	1.3465D+00	.00	1	TRC
19	CYCLES/YR	- CONSTANT -		1.0000D+01			2	TRC
20	DSIG-FATG	NORMAL	YES	2.0791D+01	1.4142D+00	.00	3	TRC
21	FCG-COEFF	NORMAL	YES	9.1401D-12	2.8508D+00	1.00	4	TRC
22	FCG-EXPNT	- CONSTANT -		4.0000D+00			5	TRC
23	FCG-THOLD	- CONSTANT -		1.5000D+00			6	TRC
24	LDEPTH-SL	- CONSTANT -		0.0000D+00			1	FMD
25	SIG-FLOW	NORMAL	NO	6.9305D+01	3.2000D+00	.00	2	FMD

Table C-24 (cont.)

PIPING SEGMENT HHI-4C LARGE LEAK FAILURE PROBABILITY

SRRA MODEL OUTPUT

26	STRESS-DL	NORMAL	YES	1.0812D+01	1.4142D+00	.00	3	FMD
27	B-SDLEAK	- CONSTANT -		2.1472D+00			4	FMD
28	B-MDLEAK	- CONSTANT -		1.0996D+01			5	FMD

PROBABILITIES OF FAILURE MODE: EXCEED DISABLING LEAK RATE OR BREAK

NUMBER FAILED = 400 NUMBER OF TRIALS = 12856

END OF YEAR	FAILURE PROBABILITY WITHOUT AND WITH IN-SERVICE INSPECTIONS FOR PERIOD	CUM. TOTAL	FOR PERIOD	CUM. TOTAL
1.0	5.82716D-09	5.82716D-09	5.82716D-09	5.82716D-09
2.0	5.40650D-10	6.36781D-09	5.40650D-10	6.36781D-09
3.0	2.17075D-08	2.80753D-08	2.17075D-08	2.80753D-08
4.0	3.41189D-09	3.14872D-08	3.41189D-09	3.14872D-08
5.0	1.95021D-08	5.09893D-08	1.95021D-08	5.09893D-08
6.0	2.98215D-09	5.39714D-08	1.35074D-11	5.10028D-08
7.0	2.20484D-09	5.61763D-08	1.24969D-11	5.10153D-08
8.0	7.77410D-09	6.39504D-08	8.08788D-11	5.10962D-08
9.0	7.49491D-08	1.38900D-07	3.32346D-09	5.44196D-08
10.0	1.26132D-07	2.65032D-07	3.42091D-09	5.78405D-08
11.0	1.07364D-07	3.72396D-07	9.25053D-09	6.70911D-08
12.0	1.28547D-09	3.73682D-07	7.19833D-11	6.71630D-08
13.0	2.41892D-09	3.76100D-07	2.20141D-10	6.73832D-08
14.0	2.09598D-08	3.97060D-07	2.37549D-09	6.97587D-08
15.0	4.78265D-09	4.01843D-07	3.73470D-10	7.01321D-08
16.0	1.32994D-08	4.15142D-07	2.71688D-12	7.01349D-08
17.0	2.91318D-09	4.18055D-07	1.50510D-12	7.01364D-08
18.0	1.10658D-09	4.19162D-07	4.37912D-12	7.01407D-08
19.0	6.24337D-09	4.25405D-07	2.28004D-11	7.01635D-08
20.0	1.33228D-08	4.38728D-07	3.92645D-11	7.02028D-08
21.0	3.01319D-08	4.68860D-07	6.22060D-11	7.02650D-08
22.0	3.93092D-09	4.72791D-07	3.83968D-12	7.02689D-08
23.0	5.30892D-08	5.25880D-07	7.86797D-10	7.10557D-08
24.0	2.06607D-08	5.46541D-07	3.00792D-10	7.13564D-08
25.0	7.11882D-09	5.53660D-07	1.46774D-10	7.15032D-08
26.0	2.98475D-08	5.83507D-07	2.80055D-13	7.15035D-08
27.0	4.16055D-07	9.99563D-07	9.93567D-13	7.15045D-08
28.0	1.13945D-08	1.01096D-06	1.66484D-13	7.15047D-08
29.0	2.81386D-07	1.29234D-06	3.63781D-11	7.15410D-08
30.0	2.93171D-07	1.58551D-06	1.60880D-10	7.17019D-08
31.0	3.64955D-08	1.62201D-06	2.05368D-12	7.17040D-08
32.0	4.43675D-07	2.06569D-06	6.27477D-11	7.17667D-08
33.0	1.80622D-08	2.08375D-06	3.15045D-12	7.17699D-08
34.0	1.90696D-08	2.10282D-06	3.09455D-13	7.17702D-08
35.0	2.98955D-08	2.13271D-06	3.51307D-11	7.18053D-08
36.0	1.52949D-07	2.28566D-06	1.46158D-12	7.18068D-08
37.0	2.87227D-08	2.31438D-06	5.27857D-14	7.18068D-08
38.0	3.60078D-08	2.35039D-06	6.09466D-14	7.18069D-08
39.0	1.41005D-07	2.49140D-06	1.74272D-13	7.18071D-08
40.0	8.09670D-07	3.30107D-06	5.18944D-12	7.18122D-08
	DEVIATION ON CUMULATIVE TOTALS =		1.62472D-07	2.43370D-08

Table C-25

PIPING SEGMENT LHI-04 FAILURE PROBABILITY WORKSHEET

Surry Unit 1

System: LHI Segment: LHI,003,004,005,006 Failure Mode(s): Fatigue Location: Welds: 3) 1-13; 4) 1-15; 5) 1-12; 6) 1-16 Drawings wmks 1106A7

No.	Input Parameter Description	Circle Choice or Set Value			Set Value	Basis
1	Type of Piping Material	304SS	316SS	Carbon Steel		Drawing/Spec
2	Crack Inspection Interval (optional)	Low(6)	Medium(10)	High(14)		Section XI
3	Crack Inspection Accuracy (optional)	High(.16)	Medium(.24)	Low(.32)		UT
4	Temperature at Pipe Weld	Low(150)	Medium(350)	High(550)	170	Line List
5	Nominal Pipe Size	Small(2)	Medium(5)	Large(16)	12	Drawing
6	Thickness to O.D. Ratio	Thin(.05)	Normal(.13)	Thick(.21)	.0294	Calc.
7	Normal Operating Pressure	Low(0.5)	Medium(1.3)	High(2.1)	.10	Line List
8	Residual Stress Level	None(0.0)	Moderate(10)	Maximum(20)		Judgment
9	Initial Flaw Conditions	One Flaw	X-Ray NDE	No X-Ray		Spec.
10	DW & Thermal Stress Level	Low(.05)	Medium(.11)	High(.17)	.1	Code Allowable
11	Stress Corrosion Potential	None(0.0)	Moderate(0.5)	Maximum(1.0)		Judgment
12	Material Wastage Potential	None(0.0)	Moderate(0.5)	Maximum(1.0)		Judgment
13	Vibratory Stress Range	None(0.0)	Moderate(1.5)	Maximum(3.0)		Judgment
14	Fatigue Stress Range	Low(.30)	Medium(.50)	High(.70)		Judgment
15	Low Cycle Fatigue Frequency	Low(10)	Medium(20)	High(30)		Judgment
16	Design Limiting Stress (LL/Break Only)	Low(.10)	Medium(26)	High(.42)	.111	Code Allowable
17	System Disabling Leak (Large Leak Only)	None(0)	Medium(300)	High(600)	2	Assumed Small
18	Min. Detectable Leak (LL/Break Only)	None(0)	Medium(5)	High(10)	None	Not used in testing

No Leak Detection

Small Leak Prob., No ISI: 2.0050E-5 Small Leak Prob., With ISI: 7.4804E-7

Large Leak Prob., No ISI: 1.5218E-5 Large Leak Prob., With ISI: 1.1679E-7 (N/A if not applicable)

Break Prob., No ISI: N/A Break Prob., With ISI: N/A (N/A if not applicable)

No Leak Detection(Snubber locking up under Thermal Conditions, Item 14 set at N/A .)(Snubber failure probability set at N/A .)(N/A if not applicable)

Small Leak Prob., No ISI: Small Leak Prob., With ISI: (N/A if not applicable)

Large Leak Prob., No ISI: Large Leak Prob., With ISI: (N/A if not applicable)

Break Prob., No ISI: Break Prob., With ISI: (N/A if not applicable)

No Leak Detection(Snubber not locking up under Seismic Conditions, Item 16 set at N/A .)(Snubber failure probability set at N/A .)(N/A if not applicable)

Large Leak Prob., No ISI: Large Leak Prob., With ISI: (N/A if not applicable)

Break Prob., No ISI: Break Prob., With ISI: (N/A if not applicable)

Leak Detection (with Snubber failure if most limiting)

Large Leak Prob., No ISI: N/A Large Leak Prob., With ISI: N/A (N/A if not applicable)

Break Prob., No ISI: N/A Break Prob., With ISI: N/A (N/A if not applicable)

Comments:
Code Allowables used.

Table C-26
PIPING SEGMENT LHI-04 SMALL LEAK FAILURE PROBABILITY
SRRA MODEL OUTPUT

Output Print File S4PROFSL.P52 Opened at 11:19 on 04-07-1997

Type of Piping Steel Material	304 St
Pipe Weld Failure Mode	Small Leak
Years Between Inspections	10.0
Wall Fraction for 50% Detection	0.240
Degrees (F) at Pipe Weld	170.0
Nominal Pipe Size (NPS, inch)	12.0
Thickness / Outside Diameter	0.0294
Operating Pressure (ksi)	0.10
Uniform Residual Stress (ksi)	10.0
Flaw Factor (<0 for 1 Flaw)	1.00
DW & Thermal Stress / Flow Stress	0.10
SCC Rate / Rate for BWR Sens. SS	0.00
Factor on Wastage of .0095 in/yr	0.00
P-P Vib. Stress (ksi for NPS of 1)	0.0
Cyclic Stress Range / Flow Stress	0.300
Fatigue Cycles per Year	10.0
Design-Limit Stress / Flow Stress	0.111
System Disabling Leak Rate (GPM)	2.0
Minimum Detectable Leak Rate (GPM)	0.0
Value of Weld Metal Flow Stress in Ksi	69.30

STRUCTURAL RELIABILITY AND RISK ASSESSMENT (SRRA)
WESTINGHOUSE PROBABILITY OF FAILURE PROGRAM LEAKPROF ESBU-NSD

INPUT VARIABLES FOR CASE **: 304 St Steel Pipe Segment LHI-3;4;5;6

NCYCLE =	40	NFAILS =	400	NTRIAL =	40000
NOVARS =	28	NUMSET =	6	NUMISI =	5
NUMSSC =	6	NUMTRC =	6	NUMFMD =	5

VARIABLE NO.	NAME	DISTRIBUTION TYPE	LOG	MEDIAN VALUE	DEVIATION OR FACTOR	SHIFT MV/SD	USAGE NO.	SUB
1	PIPE-ODIA	NORMAL	NO	1.2750D+01	3.2000D-02	.00	1	SET
2	WALL/ODIA	NORMAL	NO	2.9400D-02	9.1140D-04	.00	2	SET
3	SRESIDUAL	NORMAL	YES	1.0000D+01	1.4142D+00	.00	3	SET
4	INT%DEPTH	NORMAL	YES	2.6249D+01	1.2312D+00	2.00	4	SET
5	L/D-RATIO	NORMAL	YES	6.0000D+00	1.7126D+00	1.00	5	SET
6	FLAWS/IN	- CONSTANT -		4.0489D-03			6	SET
7	FIRST-ISI	- CONSTANT -		5.0000D+00			1	ISI
8	FREQ-ISI	- CONSTANT -		1.0000D+01			2	ISI
9	EPST-PND	- CONSTANT -		1.0000D-03			3	ISI
10	ASTAR-PND	- CONSTANT -		-2.4000D-01			4	ISI
11	ANUU-PND	- CONSTANT -		1.6000D+00			5	ISI
12	HOURS/YR	NORMAL	YES	7.4473D+03	1.0500D+00	.00	1	SSC
13	PRESSURE	NORMAL	YES	1.0000D-01	1.0323D+00	.00	2	SSC
14	SIG-DW&TH	NORMAL	YES	6.9305D+00	1.2599D+00	.00	3	SSC
15	SCC-COEFF	NORMAL	YES	3.5900D-11	2.3714D+00	.00	4	SSC
16	SCC-EXPNT	- CONSTANT -		2.1610D+00			5	SSC
17	WASTAGE	NORMAL	YES	1.2740D-12	2.3714D+00	.00	6	SSC
18	DSIG-VIBR	NORMAL	YES	1.6667D-04	1.3465D+00	.00	1	TRC
19	CYCLES/YR	- CONSTANT -		1.0000D+01			2	TRC
20	DSIG-FATG	NORMAL	YES	2.0791D+01	1.4142D+00	.00	3	TRC
21	FCG-COEFF	NORMAL	YES	9.1401D-12	2.8508D+00	1.00	4	TRC
22	FCG-EXPNT	- CONSTANT -		4.0000D+00			5	TRC
23	FCG-THOLD	- CONSTANT -		1.5000D+00			6	TRC
24	LDEPTH-SL	- CONSTANT -		-9.9900D-01			1	FMD
25	SIG-FLOW	NORMAL	NO	6.9305D+01	3.2000D+00	.00	2	FMD

Table C-26 (cont.)

PIPING SEGMENT LHI-04 SMALL LEAK FAILURE PROBABILITY

SRRA MODEL OUTPUT

26	STRESS-DL	- CONSTANT -	0.0000D+00	3	FMD
27	B-SDLEAK	- CONSTANT -	0.0000D+00	4	FMD
28	B-MDLEAK	- CONSTANT -	0.0000D+00	5	FMD

PROBABILITIES OF FAILURE MODE: THROUGH-WALL CRACK DEPTH FOR SMALL LEAK

NUMBER FAILED = 400 NUMBER OF TRIALS = 18634

END OF YEAR	FAILURE PROBABILITY WITHOUT FOR PERIOD	CUM. TOTAL	AND WITH IN-SERVICE INSPECTIONS FOR PERIOD	CUM. TOTAL
2.0	1.45468D-08	1.45468D-08	1.45468D-08	1.45468D-08
3.0	9.60939D-10	1.55077D-08	9.60939D-10	1.55077D-08
4.0	4.68097D-07	4.83605D-07	4.68097D-07	4.83605D-07
5.0	6.12827D-08	5.44888D-07	6.12827D-08	5.44888D-07
6.0	1.75877D-07	7.20765D-07	5.03385D-10	5.45391D-07
7.0	7.07888D-08	7.91554D-07	4.56368D-10	5.45847D-07
8.0	4.36571D-08	8.35211D-07	3.16315D-10	5.46164D-07
9.0	2.33301D-07	1.06851D-06	4.79062D-09	5.50954D-07
10.0	8.30516D-08	1.15156D-06	1.09621D-09	5.52051D-07
11.0	3.45188D-07	1.49675D-06	5.25852D-08	6.04636D-07
12.0	5.11694D-07	2.00845D-06	3.36194D-08	6.38255D-07
13.0	3.83721D-07	2.39217D-06	2.68504D-08	6.65106D-07
14.0	9.73126D-08	2.48948D-06	9.45615D-09	6.74562D-07
15.0	4.81176D-07	2.97066D-06	1.89192D-08	6.93481D-07
16.0	8.98940D-08	3.06055D-06	1.27178D-11	6.93494D-07
17.0	1.11501D-06	4.17556D-06	7.35594D-10	6.94229D-07
18.0	2.40247D-07	4.41581D-06	1.85449D-10	6.94415D-07
19.0	6.92592D-07	5.10840D-06	1.65287D-09	6.96068D-07
20.0	3.95971D-07	5.50437D-06	1.91372D-10	6.96259D-07
21.0	9.86178D-07	6.49055D-06	2.13247D-09	6.98392D-07
22.0	7.60547D-07	7.25109D-06	8.78818D-10	6.99270D-07
23.0	1.16786D-06	8.41896D-06	1.10003D-08	7.10271D-07
24.0	1.63321D-06	1.00522D-05	3.72827D-08	7.47553D-07
25.0	3.65624D-07	1.04178D-05	2.49567D-10	7.47803D-07
26.0	3.27005D-07	1.07448D-05	3.15683D-12	7.47806D-07
27.0	2.34827D-07	1.09796D-05	9.48577D-13	7.47807D-07
28.0	5.83098D-07	1.15627D-05	1.72205D-12	7.47809D-07
29.0	3.45369D-07	1.19081D-05	5.09393D-11	7.47860D-07
30.0	2.40198D-07	1.21483D-05	3.55000D-12	7.47863D-07
31.0	5.02699D-07	1.26510D-05	9.06996D-12	7.47872D-07
32.0	3.38754D-07	1.29897D-05	3.10176D-11	7.47903D-07
33.0	5.71615D-07	1.35614D-05	5.57266D-11	7.47959D-07
34.0	3.02256D-07	1.38636D-05	6.36701D-11	7.48023D-07
35.0	2.10327D-07	1.40739D-05	3.20227D-12	7.48026D-07
36.0	2.81382D-06	1.68878D-05	1.75648D-11	7.48043D-07
37.0	1.12904D-06	1.80168D-05	1.30517D-12	7.48045D-07
38.0	2.42155D-07	1.82589D-05	2.08426D-14	7.48045D-07
39.0	7.07655D-07	1.89666D-05	3.42589D-12	7.48048D-07
40.0	1.08366D-06	2.00503D-05	5.46998D-13	7.48049D-07
	DEVIATION ON CUMULATIVE TOTALS =		9.91721D-07	1.93568D-07

Table C-27

PIPING SEGMENT LHI-04 LARGE LEAK FAILURE PROBABILITY
SRRA MODEL OUTPUT

Output Print File S4PROFLL.P53 Opened at 11:22 on 04-07-1997

Type of Piping Steel Material	304 St
Pipe Weld Failure Mode	Large Leak
Years Between Inspections	10.0
Wall Fraction for 50% Detection	0.240
Degrees (F) at Pipe Weld	170.0
Nominal Pipe Size (NPS, inch)	12.0
Thickness / Outside Diameter	0.0294
Operating Pressure (ksi)	0.10
Uniform Residual Stress (ksi)	10.0
Flaw Factor (<0 for 1 Flaw)	1.00
DW & Thermal Stress / Flow Stress	0.10
SCC Rate / Rate for BWR Sens. SS	0.00
Factor on Wastage of .0095 in/yr	0.00
P-P Vib. Stress (ksi for NPS of 1)	0.0
Cyclic Stress Range / Flow Stress	0.300
Fatigue Cycles per Year	10.0
Design-Limit Stress / Flow Stress	0.111
System Disabling Leak Rate (GPM)	2.0
Minimum Detectable Leak Rate (GPM)	0.0
Value of Weld Metal Flow Stress in Ksi	69.30

STRUCTURAL RELIABILITY AND RISK ASSESSMENT (SRRA)
WESTINGHOUSE PROBABILITY OF FAILURE PROGRAM LEAKPROF ESBU-NSD

INPUT VARIABLES FOR CASE **: 304 St Steel Pipe Segment LHI-3;4;5;6

NCYCLE =	40	NFAILS =	400	NTRIAL =	50000
NOVARS =	28	NUMSET =	6	NUMISI =	5
NUMSSC =	6	NUMTRC =	6	NUMFMD =	5

VARIABLE NO.	NAME	DISTRIBUTION TYPE	LOG	MEDIAN VALUE	DEVIATION OR FACTOR	SHIFT MV/SD	USAGE NO.	SUB
1	PIPE-ODIA	NORMAL	NO	1.2750D+01	3.2000D-02	.00	1	SET
2	WALL/ODIA	NORMAL	NO	2.9400D-02	9.1140D-04	.00	2	SET
3	SRESIDUAL	NORMAL	YES	1.0000D+01	1.4142D+00	.00	3	SET
4	INT%DEPTH	NORMAL	YES	2.6249D+01	1.2312D+00	2.00	4	SET
5	L/D-RATIO	NORMAL	YES	6.0000D+00	1.7126D+00	2.00	5	SET
6	FLAWS/IN	- CONSTANT -		4.0489D-03			6	SET
7	FIRST-ISI	- CONSTANT -		5.0000D+00			1	ISI
8	FREQ-ISI	- CONSTANT -		1.0000D+01			2	ISI
9	EPST-PND	- CONSTANT -		1.0000D-03			3	ISI
10	ASTAR-PND	- CONSTANT -		-2.4000D-01			4	ISI
11	ANUU-PND	- CONSTANT -		1.6000D+00			5	ISI
12	HOURS/YR	NORMAL	YES	7.4473D+03	1.0500D+00	.00	1	SSC
13	PRESSURE	NORMAL	YES	1.0000D-01	1.0323D+00	.00	2	SSC
14	SIG-DW&TH	NORMAL	YES	6.9305D+00	1.2599D+00	.00	3	SSC
15	SCC-COEFF	NORMAL	YES	3.5900D-11	2.3714D+00	.00	4	SSC
16	SCC-EXPNT	- CONSTANT -		2.1610D+00			5	SSC
17	WASTAGE	NORMAL	YES	1.2740D-12	2.3714D+00	.00	6	SSC
18	DSIG-VIBR	NORMAL	YES	1.6667D-04	1.3465D+00	.00	1	TRC
19	CYCLES/YR	- CONSTANT -		1.0000D+01			2	TRC
20	DSIG-FATG	NORMAL	YES	2.0791D+01	1.4142D+00	.00	3	TRC
21	FCG-COEFF	NORMAL	YES	9.1401D-12	2.8508D+00	1.00	4	TRC
22	FCG-EXPNT	- CONSTANT -		4.0000D+00			5	TRC
23	FCG-THOLD	- CONSTANT -		1.5000D+00			6	TRC
24	LDEPTH-SL	- CONSTANT -		0.0000D+00			1	FMD
25	SIG-FLOW	NORMAL	NO	6.9305D+01	3.2000D+00	.00	2	FMD

Table C-27 (cont.)

PIPING SEGMENT LHI-04 LARGE LEAK FAILURE PROBABILITY

SRRA MODEL OUTPUT

26	STRESS-DL	NORMAL	YES	7.6928D+00	1.4142D+00	.00	3	FMD.
27	B-SDLEAK	- CONSTANT -		1.0546D+01			4	FMD
28	B-MDLEAK	- CONSTANT -		4.0055D+01			5	FMD

PROBABILITIES OF FAILURE MODE: EXCEED DISABLING LEAK RATE OR BREAK

NUMBER FAILED = 400 NUMBER OF TRIALS = 30280

END OF YEAR	FAILURE PROBABILITY WITHOUT FOR PERIOD	CUM. TOTAL	AND WITH IN-SERVICE INSPECTIONS FOR PERIOD	CUM. TOTAL
1.0	2.76955D-13	2.76955D-13	2.76955D-13	2.76955D-13
2.0	1.84989D-11	1.87758D-11	1.84989D-11	1.87758D-11
3.0	1.83449D-09	1.85326D-09	1.83449D-09	1.85326D-09
4.0	8.59677D-08	8.78210D-08	8.59677D-08	8.78210D-08
5.0	4.19350D-09	9.20145D-08	4.19350D-09	9.20145D-08
6.0	1.17526D-08	1.03767D-07	1.90456D-11	9.20335D-08
7.0	4.54052D-08	1.49172D-07	7.36206D-11	9.21071D-08
8.0	6.93727D-10	1.49866D-07	3.52033D-12	9.21107D-08
9.0	1.20927D-08	1.61959D-07	2.60716D-11	9.21367D-08
10.0	1.80472D-07	3.42431D-07	1.96590D-09	9.41026D-08
11.0	1.03478D-07	4.45909D-07	4.53304D-09	9.86357D-08
12.0	2.54853D-07	7.00761D-07	1.10643D-08	1.09700D-07
13.0	9.21467D-08	7.92908D-07	8.22837D-10	1.10523D-07
14.0	2.49914D-08	8.17900D-07	3.96435D-10	1.10919D-07
15.0	1.29152D-07	9.47051D-07	3.49984D-09	1.14419D-07
16.0	2.28668D-07	1.17572D-06	4.84983D-12	1.14424D-07
17.0	2.56427D-08	1.20136D-06	2.58860D-12	1.14427D-07
18.0	3.83321D-08	1.23969D-06	3.01561D-12	1.14430D-07
19.0	2.17753D-06	3.41722D-06	8.06941D-10	1.15237D-07
20.0	9.52658D-09	3.42675D-06	1.09011D-12	1.15238D-07
21.0	1.20682D-07	3.54743D-06	2.09011D-11	1.15259D-07
22.0	7.15812D-08	3.61901D-06	2.18645D-11	1.15280D-07
23.0	8.98377D-08	3.70885D-06	1.04829D-10	1.15385D-07
24.0	5.94033D-09	3.71479D-06	1.30089D-12	1.15387D-07
25.0	1.53423D-06	5.24902D-06	1.37853D-09	1.16765D-07
26.0	9.41368D-08	5.34316D-06	1.24883D-13	1.16765D-07
27.0	9.55581D-08	5.43872D-06	4.07495D-13	1.16766D-07
28.0	1.20868D-08	5.45080D-06	2.80659D-14	1.16766D-07
29.0	5.42698D-08	5.50507D-06	1.44749D-13	1.16766D-07
30.0	1.80875D-07	5.68595D-06	6.39415D-13	1.16766D-07
31.0	8.68635D-07	6.55458D-06	3.43403D-13	1.16767D-07
32.0	2.64816D-08	6.58106D-06	3.88684D-12	1.16771D-07
33.0	8.24575D-10	6.58189D-06	4.93642D-14	1.16771D-07
34.0	7.73052D-06	1.43124D-05	8.74417D-13	1.16772D-07
35.0	3.27432D-08	1.43452D-05	2.14956D-11	1.16793D-07
36.0	6.20221D-08	1.44072D-05	3.11588D-15	1.16793D-07
37.0	2.13319D-08	1.44285D-05	1.72015D-15	1.16793D-07
38.0	9.22975D-08	1.45208D-05	6.88458D-14	1.16793D-07
39.0	2.96237D-07	1.48170D-05	2.90554D-15	1.16793D-07
40.0	4.01302D-07	1.52183D-05	4.76037D-15	1.16793D-07
	DEVIATION ON CUMULATIVE TOTALS =		7.55887D-07	6.66573D-08

Table C-28
PIPING SEGMENT RC-16 FAILURE PROBABILITY WORKSHEET

Surry Unit 1

System: RC Segment: RC-016, 017 Failure Mode(s): Striping; Some Stratification; Thermal Fatigue Location: ID Root of Welds I-08, 2-08; Drawings 122HI, 122KI

No.	Input Parameter Description	Circle Choice or Set Value			Set Value	Basis
1	Type of Piping Material	304SS	316SS	Carbon Steel		Drawing/Spec.
2	Crack Inspection Interval (optional)	Low(6)	Medium(10)	High(14)		Section XI
3	Crack Inspection Accuracy (optional)	High(.16)	Medium(.24)	Low(.32)		UT
4	Temperature at Pipe Weld	Low(150)	Medium(350)	High(550)	606	Line List
5	Nominal Pipe Size	Small(2)	Medium(5)	Large(16)	6	Drawing
6	Thickness to O.D. Ratio	Thin(.05)	Normal(.13)	Thick(.21)	.085	Calc.
7	Normal Operating Pressure	Low(0.5)	Medium(1.3)	High(2.1)	2.52	Line List
8	Residual Stress Level	None(0.0)	Moderate(10)	Maximum(20)		Judgment
9	Initial Flaw Conditions	One Flaw	X-Ray NDE	No X-Ray		Striping
10	DW & Thermal Stress Level	Low(.05)	Medium(.11)	High(.17)	.186	Calc.
11	Stress Corrosion Potential	None(0.0)	Moderate(0.5)	Maximum(1.0)		Judgment
12	Material Wastage Potential	None(0.0)	Moderate(0.5)	Maximum(1.0)		Judgment, material
13	Vibratory Stress Range	None(0.0)	Moderate(1.5)	Maximum(3.0)		Judgment, not near pump
14	Fatigue Stress Range	Low(.30)	Medium(.50)	High(.70)	.6	Strat. (Some)
15	Low Cycle Fatigue Frequency	Low(10)	Medium(20)	High(30)		Small Changes Annually
16	Design Limiting Stress (LL/Break Only)	Low(.10)	Medium(.26)	High(.42)	.132	Calc.
17	System Disabling Leak (Large Leak Only)	None(0)	Medium(300)	High(600)	5001	Large LOCA
18	Min. Detectable Leak (LL/Break Only)	None(0)	Medium(5)	High(10)	1	T.S. Limit

No Leak Detection
*Small Leak Prob., No ISI: 5.3143E-4 Small Leak Prob., With ISI: 1.6947E-5
*Large Leak Prob., No ISI: 3.089E-4 Large Leak Prob., With ISI: 5.5208E-6 (N/A if not applicable)
Break Prob., No ISI: N/A Break Prob., With ISI: N/A (N/A if not applicable)

No Leak Detection(Snubber locking up under Thermal Conditions, Item 14 set at N/A .)(Snubber failure probability set at N/A .)(N/A if not applicable)
Small Leak Prob., No ISI: Small Leak Prob., With ISI: (N/A if not applicable)
Large Leak Prob., No ISI: Large Leak Prob., With ISI: (N/A if not applicable)
Break Prob., No ISI: Break Prob., With ISI: (N/A if not applicable)

No Leak Detection(Snubber not locking up under Seismic Conditions, Item 16 set at N/A .)(Snubber failure probability set at N/A .)(N/A if not applicable)
Large Leak Prob., No ISI: Large Leak Prob., With ISI: (N/A if not applicable)
Break Prob., No ISI: Break Prob., With ISI: (N/A if not applicable)

Leak Detection (with Snubber failure if most limiting)
*Large Leak Prob., No ISI: 2.2022E-5 Large Leak Prob., With ISI: 2.3951E-7 (N/A if not applicable)
Break Prob., No ISI: N/A Break Prob., With ISI: N/A (N/A if not applicable)

Comments:
* Use Values

Table C-29
PIPING SEGMENT RC-16 SMALL LEAK FAILURE PROBABILITY SRRA MODEL OUTPUT

Output Print File S6PROPSL.P01 Opened at 12:46 on 01-16-1997

Type of Piping Steel Material	316 St
Pipe Weld Failure Mode	Small Leak
Years Between Inspections	10.0
Wall Fraction for 50% Detection	0.240
Degrees (F) at Pipe Weld	606.0
Nominal Pipe Size (NPS, inch)	6.0
Thickness / Outside Diameter	0.0850
Operating Pressure (ksi)	2.52
Uniform Residual Stress (ksi)	10.0
Flaw Factor (<0 for 1 Flaw)	-10.80
DW & Thermal Stress / Flow Stress	0.19
SCC Rate / Rate for BWR Sens. SS	0.00
Factor on Wastage of 0.095 in/yr	0.00
P-P Vib. Stress (ksi for NPS of 1)	0.0
Cyclic Stress Range / Flow Stress	0.600
Fatigue Cycles per Year	10.0
Design-Limit Stress / Flow Stress	0.132
System Disabling Leak Rate (GPM)	5001.0
Minimum Detectable Leak Rate (GPM)	0.0
Value of Weld Metal Flow Stress in Ksi	51.08

STRUCTURAL RELIABILITY AND RISK ASSESSMENT (SRRA)
WESTINGHOUSE PROBABILITY OF FAILURE PROGRAM LEAKPROF ESBU-SMPI

INPUT VARIABLES FOR CASE 1: 316 St Steel Pipe Segment RC016017

NCYCLE =	40	NFAILS =	400	NTRIAL =	40000
NOVARS =	28	NUMSET =	6	NUMISI =	5
NUMSSC =	6	NUMTRC =	6	NUMFMD =	5

VARIABLE NO.	NAME	DISTRIBUTION TYPE	LOG	MEDIAN VALUE	DEVIATION OR FACTOR	SHIFT MV/SD	USAGE NO.	SUB
1	PIPE-ODIA	NORMAL	NO	6.6250D+00	2.4000D-02	.00	1	SET
2	WALL/ODIA	NORMAL	NO	8.5000D-02	2.6350D-03	.00	2	SET
3	SRESIDUAL	NORMAL	NO	1.0000D+00	1.4600D+01	.00	3	SET
4	INT%DEPTH	NORMAL	YES	1.7036D+01	1.3000D+00	2.00	4	SET
5	L/D-RATIO	NORMAL	YES	6.0000D+00	1.7126D+00	1.00	5	SET
6	FLAWS/IN	- CONSTANT -		-3.4370D-02			6	SET
7	FIRST-ISI	- CONSTANT -		5.0000D+00			1	ISI
8	FREQ-ISI	- CONSTANT -		1.0000D+01			2	ISI
9	EPST-PND	- CONSTANT -		1.0000D-03			3	ISI
10	ASTAR-PND	- CONSTANT -		-2.4000D-01			4	ISI
11	ANUU-PND	- CONSTANT -		1.6000D+00			5	ISI
12	HOURS/YR	NORMAL	YES	7.4473D+03	1.0500D+00	.00	1	SSC
13	PRESSURE	NORMAL	YES	2.5200D+00	1.0323D+00	.00	2	SSC
14	SIG-DW&TH	NORMAL	YES	9.5018D+00	1.2599D+00	.00	3	SSC
15	SCC-COEFF	NORMAL	YES	3.2310D-12	2.3714D+00	.00	4	SSC
16	SCC-EXPNT	- CONSTANT -		2.1610D+00			5	SSC
17	WASTAGE	NORMAL	YES	1.2740D-12	2.3714D+00	.00	6	SSC
18	DSIG-VIBR	NORMAL	YES	3.6957D-04	1.3465D+00	.00	1	TRC
19	CYCLES/YR	- CONSTANT -		1.0000D+01			2	TRC
20	DSIG-FATG	NORMAL	YES	3.0651D+01	1.4142D+00	.00	3	TRC
21	FCG-COEFF	NORMAL	YES	9.1401D-12	2.8508D+00	1.00	4	TRC
22	FCG-EXPNT	- CONSTANT -		4.0000D+00			5	TRC
23	FCG-THOLD	- CONSTANT -		1.5000D+00			6	TRC
24	LDEPTH-SL	- CONSTANT -		-9.9900D-01			1	FMD
25	SIG-FLOW	NORMAL	NO	5.1085D+01	3.2000D+00	.00	2	FMD

Table C-29 (cont.)
PIPING SEGMENT RC-16 SMALL LEAK FAILURE PROBABILITY
SRRA MODEL OUTPUT

26	STRESS-DL	- CONSTANT -	0.0000D+00	3	FMD
27	B-SDLEAK	- CONSTANT -	0.0000D+00	4	FMD
28	B-MDLEAK	- CONSTANT -	0.0000D+00	5	FMD

PROBABILITIES OF FAILURE MODE: THROUGH-WALL CRACK DEPTH FOR SMALL LEAK

NUMBER FAILED = 400 NUMBER OF TRIALS = 10023

END OF YEAR	FAILURE PROBABILITY WITHOUT FOR PERIOD	CUM. TOTAL	AND WITH IN-SERVICE INSPECTIONS FOR PERIOD	CUM. TOTAL
1.0	7.06487D-08	7.06487D-08	7.06487D-08	7.06487D-08
2.0	1.13614D-07	1.84263D-07	1.13614D-07	1.84263D-07
3.0	2.61393D-06	2.79819D-06	2.61393D-06	2.79819D-06
4.0	3.41953D-06	6.21772D-06	3.41953D-06	6.21772D-06
5.0	1.46373D-06	7.68145D-06	1.46373D-06	7.68145D-06
6.0	8.54034D-06	1.62218D-05	2.90948D-08	7.71055D-06
7.0	1.53790D-06	1.77597D-05	2.84612D-08	7.73901D-06
8.0	5.13029D-06	2.28900D-05	2.25817D-07	7.96482D-06
9.0	3.34913D-05	5.63813D-05	2.71911D-06	1.06839D-05
10.0	1.34063D-05	6.97876D-05	1.64706D-06	1.23310D-05
11.0	2.12286D-06	7.19104D-05	1.52146D-07	1.24831D-05
12.0	6.37091D-06	7.82813D-05	5.04352D-07	1.29875D-05
13.0	2.03347D-06	8.03148D-05	2.12273D-07	1.31998D-05
14.0	6.00747D-06	8.63223D-05	7.58031D-07	1.39578D-05
15.0	2.23316D-06	8.85554D-05	4.09244D-07	1.43670D-05
16.0	2.09041D-06	9.06459D-05	7.82116D-10	1.43678D-05
17.0	1.11525D-05	1.01798D-04	5.67209D-09	1.43735D-05
18.0	2.59331D-05	1.27731D-04	1.11759D-07	1.44853D-05
19.0	3.55314D-06	1.31285D-04	7.64279D-09	1.44929D-05
20.0	2.14520D-05	1.52737D-04	1.49909D-07	1.46428D-05
21.0	1.19558D-05	1.64692D-04	4.70574D-07	1.51134D-05
22.0	1.09761D-05	1.75668D-04	1.06634D-07	1.52200D-05
23.0	8.60885D-06	1.84277D-04	3.46454D-07	1.55665D-05
24.0	1.26317D-05	1.96909D-04	4.64703D-07	1.60312D-05
25.0	2.12868D-05	2.18196D-04	6.70642D-07	1.67018D-05
26.0	1.75070D-05	2.35703D-04	2.19842D-09	1.67040D-05
27.0	1.71112D-05	2.52814D-04	9.58261D-09	1.67136D-05
28.0	1.20523D-05	2.64866D-04	4.92245D-09	1.67185D-05
29.0	6.37933D-06	2.71246D-04	3.98305D-09	1.67225D-05
30.0	3.94675D-06	2.75192D-04	4.90611D-09	1.67274D-05
31.0	2.80601D-05	3.03252D-04	3.80871D-08	1.67655D-05
32.0	3.82401D-06	3.07076D-04	5.28790D-09	1.67708D-05
33.0	1.34925D-05	3.20569D-04	2.60070D-08	1.67968D-05
34.0	6.70825D-06	3.27277D-04	1.99906D-08	1.68168D-05
35.0	1.75079D-05	3.44785D-04	9.03759D-08	1.69072D-05
36.0	3.64864D-05	3.81271D-04	3.11328D-10	1.69075D-05
37.0	2.38315D-05	4.05103D-04	2.34054D-10	1.69077D-05
38.0	1.68424D-06	4.06787D-04	5.27691D-11	1.69078D-05
39.0	1.05336D-04	5.12123D-04	3.72499D-08	1.69450D-05
40.0	1.93159D-05	5.31439D-04	2.00214D-09	1.69470D-05
	DEVIATION ON CUMULATIVE TOTALS =		2.60376D-05	4.74229D-06

Table C-30
PIPING SEGMENT RC-16 LARGE LEAK FAILURE PROBABILITY
SRRA MODEL OUTPUT

Output Print File S6PROFLL.P02 Opened at 12:49 on 01-16-1997

Type of Piping Steel Material	316 St
Pipe Weld Failure Mode	Large Leak
Years Between Inspections	10.0
Wall Fraction for 50% Detection	0.240
Degrees (F) at Pipe Weld	606.0
Nominal Pipe Size (NPS, inch)	6.0
Thickness / Outside Diameter	0.0850
Operating Pressure (ksi)	2.52
Uniform Residual Stress (ksi)	10.0
Flaw Factor (<0 for 1 Flaw)	-10.80
DW & Thermal Stress / Flow Stress	0.19
SCC Rate / Rate for BWR Sens. SS	0.00
Factor on Wastage of 0.095 in/yr	0.00
P-P Vib. Stress (ksi for NPS of 1)	0.0
Cyclic Stress Range / Flow Stress	0.600
Fatigue Cycles per Year	10.0
Design-Limit Stress / Flow Stress	0.132
System Disabling Leak Rate (GPM)	5001.0
Minimum Detectable Leak Rate (GPM)	0.0
Value of Weld Metal Flow Stress in Ksi	51.08

STRUCTURAL RELIABILITY AND RISK ASSESSMENT (SRRA)
WESTINGHOUSE PROBABILITY OF FAILURE PROGRAM LEAKPROF ESBU-SMP

INPUT VARIABLES FOR CASE 2: 316 St Steel Pipe Segment RC016017

NCYCLE =	40	NFAILS =	400	NTRIAL =	50000
NOVARS =	28	NUMSET =	6	NUMISI =	5
NUMSSC =	6	NUMTRC =	6	NUMFMD =	5

VARIABLE NO.	NAME	DISTRIBUTION TYPE	LOG	MEDIAN VALUE	DEVIATION OR FACTOR	SHIFT MV/SD	USAGE NO.	SUB
1	PIPE-ODIA	NORMAL	NO	6.6250D+00	2.4000D-02	.00	1	SET
2	WALL/ODIA	NORMAL	NO	8.5000D-02	2.6350D-03	.00	2	SET
3	SRESIDUAL	NORMAL	NO	1.0000D+00	1.4600D+01	.00	3	SET
4	INT%DEPTH	NORMAL	YES	1.7036D+01	1.3000D+00	2.00	4	SET
5	L/D-RATIO	NORMAL	YES	6.0000D+00	1.7126D+00	2.00	5	SET
6	FLAWS/IN	- CONSTANT -		-3.4370D-02			6	SET
7	FIRST-ISI	- CONSTANT -		5.0000D+00			1	ISI
8	FREQ-ISI	- CONSTANT -		1.0000D+01			2	ISI
9	EPST-PND	- CONSTANT -		1.0000D-03			3	ISI
10	ASTAR-PND	- CONSTANT -		-2.4000D-01			4	ISI
11	ANUU-PND	- CONSTANT -		1.6000D+00			5	ISI
12	HOURS/YR	NORMAL	YES	7.4473D+03	1.0500D+00	.00	1	SSC
13	PRESSURE	NORMAL	YES	2.5200D+00	1.0323D+00	.00	2	SSC
14	SIG-DW&TH	NORMAL	YES	9.5018D+00	1.2599D+00	.00	3	SSC
15	SCC-COEFF	NORMAL	YES	3.2310D-12	2.3714D+00	.00	4	SSC
16	SCC-EXPNT	- CONSTANT -		2.1610D+00			5	SSC
17	WASTAGE	NORMAL	YES	1.2740D-12	2.3714D+00	.00	6	SSC
18	DSIG-VIBR	NORMAL	YES	3.6957D-04	1.3465D+00	.00	1	TRC
19	CYCLES/YR	- CONSTANT -		1.0000D+01			2	TRC
20	DSIG-FATG	NORMAL	YES	3.0651D+01	1.4142D+00	.00	3	TRC
21	FCG-COEFF	NORMAL	YES	9.1401D-12	2.8508D+00	1.00	4	TRC
22	FCG-EXPNT	- CONSTANT -		4.0000D+00			5	TRC
23	FCG-THOLD	- CONSTANT -		1.5000D+00			6	TRC
24	LDEPTH-SL	- CONSTANT -		0.0000D+00			1	FMD
25	SIG-FLOW	NORMAL	NO	5.1085D+01	3.2000D+00	.00	2	FMD

Table C-30 (cont.)
PIPING SEGMENT RC-16 LARGE LEAK FAILURE PROBABILITY
SRRA MODEL OUTPUT

26	STRESS-DL	NORMAL	YES	6.7432D+00	1.4142D+00	.00	3	FMD
27	B-SDLEAK	- CONSTANT -		1.1628D+01			4	FMD
28	B-MDLEAK	- CONSTANT -		2.0813D+01			5	FMD

PROBABILITIES OF FAILURE MODE: EXCEED DISABLING LEAK RATE OR BREAK

NUMBER FAILED = 400 NUMBER OF TRIALS = 9217

END OF YEAR	FAILURE PROBABILITY WITHOUT FOR PERIOD	CUM. TOTAL	AND WITH IN-SERVICE INSPECTIONS FOR PERIOD	CUM. TOTAL
1.0	9.44497D-10	9.44497D-10	9.44497D-10	9.44497D-10
2.0	3.48526D-11	9.79350D-10	3.48526D-11	9.79350D-10
3.0	1.18242D-08	1.28035D-08	1.18242D-08	1.28035D-08
4.0	1.00948D-06	1.02229D-06	1.00948D-06	1.02229D-06
5.0	2.44977D-07	1.26727D-06	2.44977D-07	1.26727D-06
6.0	1.58724D-07	1.42599D-06	2.57772D-10	1.26752D-06
7.0	3.85839D-06	5.28438D-06	8.97329D-09	1.27650D-06
8.0	8.89986D-07	6.17437D-06	4.04945D-09	1.28055D-06
9.0	4.62292D-08	6.22060D-06	1.42977D-09	1.28198D-06
10.0	6.94966D-07	6.91557D-06	3.24458D-08	1.31442D-06
11.0	8.95701D-08	7.00514D-06	2.48158D-08	1.33924D-06
12.0	3.09731D-06	1.01024D-05	3.86141D-07	1.72538D-06
13.0	1.17576D-06	1.12782D-05	9.39159D-08	1.81929D-06
14.0	2.21441D-07	1.14996D-05	9.58465D-09	1.82888D-06
15.0	5.23163D-08	1.15520D-05	2.13572D-09	1.83101D-06
16.0	6.29774D-06	1.78497D-05	9.89622D-10	1.83200D-06
17.0	2.06051D-06	1.99102D-05	3.46617D-10	1.83235D-06
18.0	3.60261D-07	2.02705D-05	7.92292D-11	1.83243D-06
19.0	2.01625D-06	2.22867D-05	8.18443D-10	1.83325D-06
20.0	5.54292D-06	2.78296D-05	1.33679D-09	1.83458D-06
21.0	5.73822D-06	3.35679D-05	2.19211D-09	1.83678D-06
22.0	1.08762D-06	3.46555D-05	1.90695D-09	1.83868D-06
23.0	2.11715D-06	3.67726D-05	3.34736D-08	1.87216D-06
24.0	6.39419D-06	4.31668D-05	3.51954D-08	1.90735D-06
25.0	2.98934D-05	7.30602D-05	3.58711D-06	5.49446D-06
26.0	4.35838D-06	7.74186D-05	4.36037D-10	5.49490D-06
27.0	1.70956D-04	2.48375D-04	2.15406D-08	5.51644D-06
28.0	2.65279D-06	2.51028D-04	1.95007D-11	5.51646D-06
29.0	2.83421D-06	2.53862D-04	1.35764D-10	5.51660D-06
30.0	8.09219D-07	2.54671D-04	4.14062D-11	5.51664D-06
31.0	8.87661D-06	2.63548D-04	5.05762D-10	5.51714D-06
32.0	4.65187D-06	2.68200D-04	8.63523D-10	5.51801D-06
33.0	4.20967D-06	2.72409D-04	8.49243D-10	5.51886D-06
34.0	2.11216D-06	2.74522D-04	1.23110D-09	5.52009D-06
35.0	3.21523D-06	2.77737D-04	4.23344D-10	5.52051D-06
36.0	7.99189D-06	2.85729D-04	8.18598D-12	5.52052D-06
37.0	1.84814D-06	2.87577D-04	2.68455D-12	5.52052D-06
38.0	9.93023D-06	2.97507D-04	2.02537D-10	5.52072D-06
39.0	1.34510D-06	2.98852D-04	2.53457D-11	5.52075D-06
40.0	1.00560D-05	3.08908D-04	5.34335D-11	5.52080D-06
	DEVIATION ON CUMULATIVE TOTALS =		1.51074D-05	2.06415D-06

Table C-31

PIPING SEGMENT RC-58 FAILURE PROBABILITY WORKSHEET

Surry Unit 1

System: RC Segment: RC-057,058,059 Failure Mode(s): Fatigue Location: Pipe to Valve; Pipe to Reducer Drawing 0124 A1-1

No.	Input Parameter Description	Circle Choice or Set Value			Set Value	Basis
1	Type of Piping Material	304SS	316SS	Carbon Steel		Drawing/Spec.
2	Crack Inspection Interval (optional)	Low(6)	Medium(10)	High(14)		Section XI
3	Crack Inspection Accuracy (optional)	High(.16)	Medium(.24)	Low(.32)		UT
4	Temperature at Pipe Weld	Low(150)	Medium(350)	High(550)	650	Line List[1]
5	Nominal Pipe Size	Small(2)	Medium(5)	Large(16)	3	Drawing[1]
6	Thickness to O.D. Ratio	Thin(.05)	Normal(.13)	Thick(.21)	.125	Calc.
7	Normal Operating Pressure	Low(0.5)	Medium(1.3)	High(2.1)	2.235	Line List
8	Residual Stress Level	None(0.0)	Moderate(10)	Maximum(20)		Judgment
9	Initial Flaw Conditions	One Flaw	X-Ray NDE	No X-Ray		Spec.
10	DW & Thermal Stress Level	Low(.05)	Medium(.11)	High(.17)	.342	Calc.
11	Stress Corrosion Potential	None(0.0)	Moderate(0.5)	Maximum(1.0)		Judgment
12	Material Wastage Potential	None(0.0)	Moderate(0.5)	Maximum(1.0)		Judgment/Material
13	Vibratory Stress Range	None(0.0)	Moderate(1.5)	Maximum(3.0)		Transients Experienced
14	Fatigue Stress Range	Low(.30)	Medium(.50)	High(.70)		Judgment
15	Low Cycle Fatigue Frequency	Low(10)	Medium(20)	High(30)		Small Changes Annually
16	Design Limiting Stress (LL/Break Only)	Low(.10)	Medium(.26)	High(.42)	.253	Calc.
17	System Disabling Leak (Large Leak Only)	None(0)	Medium(300)	High(600)	.501	Medium LOCA
18	Min. Detectable Leak (LL/Break Only)	None(0)	Medium(5)	High(10)	1	T.S. Limit

[1] .4375" thick sh 160

*No Leak Detection

Small Leak Prob., No ISI: 4.1474E-5 Small Leak Prob., With ISI: 3.202E-5

*Large Leak Prob., No ISI: 4.5569E-6 Large Leak Prob., With ISI: 2.8049E-5 (N/A if not applicable)

Break Prob., No ISI: N/A Break Prob., With ISI: N/A (N/A if not applicable)

No Leak Detection(Snubber locking up under Thermal Conditions, Item 14 set at .7 .)(Snubber failure probability set at 20% .)(N/A if not applicable)

Small Leak Prob., No ISI: 1.7076E-5 Small Leak Prob., With ISI: 5.78E-6 (N/A if not applicable)

Large Leak Prob., No ISI: 1.3248E-5 Large Leak Prob., With ISI: 5.94262E-6 (N/A if not applicable)

Break Prob., No ISI: N/A Break Prob., With ISI: N/A (N/A if not applicable)

No Leak Detection(Snubber not locking up under Seismic Conditions, Item 16 set at .5 .)(Snubber failure probability set at 20% .)(N/A if not applicable)

Large Leak Prob., No ISI: 3.2683E-5 Large Leak Prob., With ISI: 3.16298E-5 (N/A if not applicable)

Break Prob., No ISI: N/A Break Prob., With ISI: N/A (N/A if not applicable)

*Leak Detection (with Snubber failure if most limiting)

* Large Leak Prob., No ISI: 3.7727E-6 Large Leak Prob., With ISI: 2.3223E-6 (N/A if not applicable) (nonsnubber failure most limiting

Break Prob., No ISI: N/A Break Prob., With ISI: N/A (N/A if not applicable)

Comments:

Note: 20% snubber failure probability used due to large number of snubbers.

* use values/note for no leak detection LL probability should be used

Table C-32
PIPING SEGMENT RC-58 SMALL LEAK FAILURE PROBABILITY
SRRA MODEL OUTPUT

Output Print File S6PROFSL.P16 Opened at 22:15 on 01-16-1997

Type of Piping Steel Material	316 St
Pipe Weld Failure Mode	Small Leak
Years Between Inspections	10.0
Wall Fraction for 50% Detection	0.240
Degrees (F) at Pipe Weld	650.0
Nominal Pipe Size (NPS, inch)	3.0
Thickness / Outside Diameter	0.1250
Operating Pressure (ksi)	2.24
Uniform Residual Stress (ksi)	10.0
Flaw Factor (<0 for 1 Flaw)	1.00
DW & Thermal Stress / Flow Stress	0.34
SCC Rate / Rate for BWR Sens. SS	0.00
Factor on Wastage of 0.095 in/yr	0.00
P-P Vib. Stress (ksi for NPS of 1)	1.5
Cyclic Stress Range / Flow Stress	0.500
Fatigue Cycles per Year	10.0
Design-Limit Stress / Flow Stress	0.253
System Disabling Leak Rate (GPM)	1501.0
Minimum Detectable Leak Rate (GPM)	0.0
Value of Weld Metal Flow Stress in Ksi	49.25

STRUCTURAL RELIABILITY AND RISK ASSESSMENT (SRRA)
WESTINGHOUSE PROBABILITY OF FAILURE PROGRAM LEAKPROF ESBU-SMP

INPUT VARIABLES FOR CASE 16: 316 St Steel Pipe Segment RC057058059

NCYCLE =	40	NFAILS =	400	NTRIAL =	40000
NOVARS =	28	NUMSET =	6	NUMISI =	5
NUMSSC =	6	NUMTRC =	6	NUMFMD =	5

VARIABLE NO.	NAME	DISTRIBUTION TYPE	LOG	MEDIAN VALUE	DEVIATION OR FACTOR	SHIFT MV/SD	USAGE NO.	SUB
1	PIPE-ODIA	NORMAL	NO	3.5000D+00	1.6000D-02	.00	1	SET
2	WALL/ODIA	NORMAL	NO	1.2500D-01	3.8750D-03	.00	2	SET
3	SRESIDUAL	NORMAL	NO	1.0000D+00	1.4600D+01	.00	3	SET
4	INT%DEPTH	NORMAL	YES	2.2310D+01	1.2544D+00	2.00	4	SET
5	L/D-RATIO	NORMAL	YES	6.0000D+00	1.7126D+00	1.00	5	SET
6	FLAWS/IN	- CONSTANT -		3.7371D-03			6	SET
7	FIRST-ISI	- CONSTANT -		5.0000D+00			1	ISI
8	FREQ-ISI	- CONSTANT -		1.0000D+01			2	ISI
9	EPST-PND	- CONSTANT -		1.0000D-03			3	ISI
10	ASTAR-PND	- CONSTANT -		-2.4000D-01			4	ISI
11	ANUU-PND	- CONSTANT -		1.6000D+00			5	ISI
12	HOURS/YR	NORMAL	YES	7.4473D+03	1.0500D+00	.00	1	SSC
13	PRESSURE	NORMAL	YES	2.2350D+00	1.0323D+00	.00	2	SSC
14	SIG-DW&TH	NORMAL	YES	1.6842D+01	1.2599D+00	.00	3	SSC
15	SCC-COEFF	NORMAL	YES	3.2310D-12	2.3714D+00	.00	4	SSC
16	SCC-EXPNT	- CONSTANT -		2.1610D+00			5	SSC
17	WASTAGE	NORMAL	YES	1.2740D-12	2.3714D+00	.00	6	SSC
18	DSIG-VIBR	NORMAL	YES	1.0073D+00	1.3465D+00	.00	1	TRC
19	CYCLES/YR	- CONSTANT -		1.0000D+01			2	TRC
20	DSIG-FATG	NORMAL	YES	2.4623D+01	1.4142D+00	.00	3	TRC
21	FCG-COEFF	NORMAL	YES	9.1401D-12	2.8508D+00	1.00	4	TRC
22	FCG-EXPNT	- CONSTANT -		4.0000D+00			5	TRC
23	FCG-THOLD	- CONSTANT -		1.5000D+00			6	TRC
24	LDEPTH-SL	- CONSTANT -		-9.9900D-01			1	FMD
25	SIG-FLOW	NORMAL	NO	4.9246D+01	3.2000D+00	.00	2	FMD

Table C-32 (cont.)
PIPING SEGMENT RC-58 SMALL LEAK FAILURE PROBABILITY
SRRA MODEL OUTPUT

26	STRESS-DL	- CONSTANT -	0.0000D+00	3	FMD
27	B-SDLEAK	- CONSTANT -	0.0000D+00	4	FMD
28	B-MDLEAK	- CONSTANT -	0.0000D+00	5	FMD

PROBABILITIES OF FAILURE MODE: THROUGH-WALL CRACK DEPTH FOR SMALL LEAK

NUMBER FAILED = 400 NUMBER OF TRIALS = 5457

END OF YEAR	FAILURE PROBABILITY WITHOUT FOR PERIOD	CUM. TOTAL	AND WITH IN-SERVICE INSPECTIONS FOR PERIOD	CUM. TOTAL
1.0	3.05735D-05	3.05735D-05	3.05735D-05	3.05735D-05
2.0	1.93275D-07	3.07667D-05	1.93275D-07	3.07667D-05
3.0	2.97649D-08	3.07965D-05	2.97649D-08	3.07965D-05
4.0	2.64509D-07	3.10610D-05	2.64509D-07	3.10610D-05
5.0	6.27345D-08	3.11237D-05	6.27345D-08	3.11237D-05
6.0	6.64182D-08	3.11902D-05	1.15932D-08	3.11353D-05
7.0	9.62364D-09	3.11998D-05	1.28965D-09	3.11366D-05
8.0	2.18647D-07	3.14184D-05	1.54370D-08	3.11521D-05
9.0	1.53169D-07	3.15716D-05	1.24834D-08	3.11645D-05
10.0	2.23454D-07	3.17950D-05	1.40678D-08	3.11786D-05
11.0	1.62505D-08	3.18113D-05	7.13916D-10	3.11793D-05
12.0	6.76120D-07	3.24874D-05	1.37749D-07	3.13171D-05
13.0	8.02740D-07	3.32902D-05	1.74791D-07	3.14919D-05
14.0	9.43936D-08	3.33846D-05	8.65672D-09	3.15005D-05
15.0	1.81334D-06	3.51979D-05	5.00325D-07	3.20008D-05
16.0	4.43455D-08	3.52422D-05	9.34692D-11	3.20009D-05
17.0	2.22844D-08	3.52645D-05	8.36751D-12	3.20009D-05
18.0	3.06251D-09	3.52676D-05	2.53614D-12	3.20009D-05
19.0	2.76890D-08	3.52953D-05	1.78585D-11	3.20010D-05
20.0	5.10872D-08	3.53464D-05	4.84685D-11	3.20010D-05
21.0	4.08811D-07	3.57552D-05	1.16623D-08	3.20127D-05
22.0	1.81130D-07	3.59363D-05	3.89584D-10	3.20131D-05
23.0	2.19679D-07	3.61560D-05	9.84884D-10	3.20141D-05
24.0	1.97957D-07	3.63539D-05	5.07247D-10	3.20146D-05
25.0	1.84426D-08	3.63724D-05	6.08195D-11	3.20146D-05
26.0	2.67152D-07	3.66395D-05	4.68987D-10	3.20151D-05
27.0	1.30366D-07	3.67699D-05	6.13693D-13	3.20151D-05
28.0	2.77886D-07	3.70478D-05	3.22988D-12	3.20151D-05
29.0	7.28714D-07	3.77765D-05	3.17546D-10	3.20154D-05
30.0	1.28955D-07	3.79055D-05	6.69171D-11	3.20155D-05
31.0	5.74814D-07	3.84803D-05	4.33284D-10	3.20159D-05
32.0	6.17462D-08	3.85420D-05	2.72044D-11	3.20159D-05
33.0	1.62001D-06	4.01620D-05	3.65206D-09	3.20196D-05
34.0	3.54851D-08	4.01975D-05	6.32502D-13	3.20196D-05
35.0	2.85635D-07	4.04831D-05	1.22371D-09	3.20208D-05
36.0	9.36552D-08	4.05768D-05	7.73760D-12	3.20208D-05
37.0	4.11905D-07	4.09887D-05	5.75641D-12	3.20208D-05
38.0	1.98323D-07	4.11870D-05	7.31900D-12	3.20208D-05
39.0	1.51868D-08	4.12022D-05	5.49533D-13	3.20208D-05
40.0	2.72315D-07	4.14745D-05	1.99024D-12	3.20208D-05
	DEVIATION ON CUMULATIVE TOTALS =		1.99646D-06	1.76997D-06

Table C-33
PIPING SEGMENT RC-58 LARGE LEAK FAILURE PROBABILITY
SRRA MODEL OUTPUT

Output Print File S6PROFLL.P17 Opened at 22:17 on 01-16-1997

Type of Piping Steel Material	316 St
Pipe Weld Failure Mode	Large Leak
Years Between Inspections	10.0
Wall Fraction for 50% Detection	0.240
Degrees (F) at Pipe Weld	650.0
Nominal Pipe Size (NPS, inch)	3.0
Thickness / Outside Diameter	0.1250
Operating Pressure (ksi)	2.24
Uniform Residual Stress (ksi)	10.0
Flaw Factor (<0 for 1 Flaw)	1.00
DW & Thermal Stress / Flow Stress	0.34
SCC Rate / Rate for BWR Sens. SS	0.00
Factor on Wastage of 0.095 in/yr	0.00
P-P Vib. Stress (ksi for NPS of 1)	1.5
Cyclic Stress Range / Flow Stress	0.500
Fatigue Cycles per Year	10.0
Design-Limit Stress / Flow Stress	0.253
System Disabling Leak Rate (GPM)	1501.0
Minimum Detectable Leak Rate (GPM)	0.0
Value of Weld Metal Flow Stress in Ksi	49.25

STRUCTURAL RELIABILITY AND RISK ASSESSMENT (SRRA)
WESTINGHOUSE PROBABILITY OF FAILURE PROGRAM LEAKPROF ESBU-SMI

INPUT VARIABLES FOR CASE 17: 316 St Steel Pipe Segment RC057058059

NCYCLE = 40 NFAILS = 400 NTRIAL = 50000
NOVARS = 28 NUMSET = 6 NUMISI = 5
NUMSSC = 6 NUMTRC = 6 NUMFMD = 5

VARIABLE NO.	NAME	DISTRIBUTION TYPE	LOG	MEDIAN VALUE	DEVIATION OR FACTOR	SHIFT MV/SD	USAGE NO.	SUB
1	PIPE-ODIA	NORMAL	NO	3.5000D+00	1.6000D-02	.00	1	SET
2	WALL/ODIA	NORMAL	NO	1.2500D-01	3.8750D-03	.00	2	SET
3	SRESIDUAL	NORMAL	NO	1.0000D+00	1.4600D+01	.00	3	SET
4	INT%DEPTH	NORMAL	YES	2.2310D+01	1.2544D+00	2.00	4	SET
5	L/D-RATIO	NORMAL	YES	6.0000D+00	1.7126D+00	2.00	5	SET
6	FLAWS/IN	- CONSTANT -		3.7371D-03			6	SET
7	FIRST-ISI	- CONSTANT -		5.0000D+00			1	ISI
8	FREQ-ISI	- CONSTANT -		1.0000D+01			2	ISI
9	EPST-PND	- CONSTANT -		1.0000D-03			3	ISI
10	ASTAR-PND	- CONSTANT -		-2.4000D-01			4	ISI
11	ANUU-PND	- CONSTANT -		1.6000D+00			5	ISI
12	HOURS/YR	NORMAL	YES	7.4473D+03	1.0500D+00	.00	1	SSC
13	PRESSURE	NORMAL	YES	2.2350D+00	1.0323D+00	.00	2	SSC
14	SIG-DW&TH	NORMAL	YES	1.6842D+01	1.2599D+00	.00	3	SSC
15	SCC-COEFF	NORMAL	YES	3.2310D-12	2.3714D+00	.00	4	SSC
16	SCC-EXPNT	- CONSTANT -		2.1610D+00			5	SSC
17	WASTAGE	NORMAL	YES	1.2740D-12	2.3714D+00	.00	6	SSC
18	DSIG-VIBR	NORMAL	YES	1.0073D+00	1.3465D+00	.00	1	TRC
19	CYCLES/YR	- CONSTANT -		1.0000D+01			2	TRC
20	DSIG-FATG	NORMAL	YES	2.4623D+01	1.4142D+00	.00	3	TRC
21	FCG-COEFF	NORMAL	YES	9.1401D-12	2.8508D+00	1.00	4	TRC
22	FCG-EXPNT	- CONSTANT -		4.0000D+00			5	TRC
23	FCG-THOLD	- CONSTANT -		1.5000D+00			6	TRC
24	LDEPTH-SL	- CONSTANT -		0.0000D+00			1	FMD
25	SIG-FLOW	NORMAL	NO	4.9246D+01	3.2000D+00	.00	2	FMD

Table C-33 (cont.)

PIPING SEGMENT RC-58 LARGE LEAK FAILURE PROBABILITY

SRRA MODEL OUTPUT

26	STRESS-DL	NORMAL	YES	1.2459D+01	1.4142D+00	.00	3	FMD
27	B-SDLEAK	- CONSTANT -		4.4079D+00			4	FMD
28	B-MDLEAK	- CONSTANT -		1.0996D+01			5	FMD

PROBABILITIES OF FAILURE MODE: EXCEED DISABLING LEAK RATE OR BREAK

NUMBER FAILED = 400 NUMBER OF TRIALS = 3687

END OF YEAR	FAILURE PROBABILITY WITHOUT FOR PERIOD	CUM. TOTAL	AND WITH IN-SERVICE INSPECTIONS FOR PERIOD	CUM. TOTAL
1.0	3.33516D-06	3.33516D-06	3.33516D-06	3.33516D-06
2.0	2.44084D-05	2.77435D-05	2.44084D-05	2.77435D-05
3.0	4.92446D-08	2.77928D-05	4.92446D-08	2.77928D-05
4.0	1.34994D-09	2.77941D-05	1.34994D-09	2.77941D-05
5.0	7.59701D-08	2.78701D-05	7.59701D-08	2.78701D-05
6.0	1.47989D-07	2.80181D-05	5.48406D-10	2.78706D-05
7.0	1.20917D-07	2.81390D-05	5.06341D-09	2.78757D-05
8.0	5.97074D-09	2.81450D-05	5.85096D-10	2.78763D-05
9.0	6.43262D-08	2.82093D-05	2.80123D-09	2.78791D-05
10.0	4.57226D-09	2.82139D-05	4.28518D-10	2.78795D-05
11.0	3.02325D-09	2.82169D-05	1.22178D-10	2.78796D-05
12.0	4.67067D-08	2.82636D-05	4.96029D-09	2.78846D-05
13.0	1.22481D-09	2.82648D-05	6.33701D-11	2.78846D-05
14.0	2.77235D-08	2.82925D-05	9.21454D-10	2.78856D-05
15.0	1.27653D-07	2.84202D-05	1.30684D-08	2.78986D-05
16.0	2.11578D-08	2.84413D-05	4.45061D-12	2.78986D-05
17.0	8.57868D-08	2.85271D-05	1.52941D-10	2.78988D-05
18.0	1.64121D-07	2.86912D-05	1.25991D-09	2.79001D-05
19.0	4.39086D-07	2.91303D-05	2.72077D-10	2.79003D-05
20.0	4.62152D-08	2.91765D-05	2.92562D-10	2.79006D-05
21.0	2.42487D-09	2.91790D-05	9.98393D-12	2.79006D-05
22.0	1.79865D-07	2.93588D-05	7.35547D-10	2.79014D-05
23.0	5.85201D-08	2.94174D-05	2.49486D-10	2.79016D-05
24.0	7.95809D-08	2.94969D-05	5.56451D-10	2.79022D-05
25.0	1.94796D-07	2.96917D-05	5.68400D-09	2.79079D-05
26.0	5.21654D-08	2.97439D-05	5.10303D-13	2.79079D-05
27.0	4.07707D-07	3.01516D-05	1.40309D-09	2.79093D-05
28.0	1.03591D-07	3.02552D-05	7.86864D-12	2.79093D-05
29.0	4.99632D-09	3.02602D-05	4.62066D-13	2.79093D-05
30.0	8.21625D-08	3.03424D-05	1.96166D-10	2.79095D-05
31.0	4.46089D-08	3.03870D-05	1.30322D-11	2.79095D-05
32.0	1.09754D-07	3.04967D-05	1.23450D-10	2.79096D-05
33.0	5.70996D-07	3.10677D-05	1.38261D-08	2.79234D-05
34.0	1.31202D-05	4.41879D-05	1.22141D-07	2.80456D-05
35.0	5.46170D-07	4.47341D-05	2.52405D-09	2.80481D-05
36.0	6.52487D-08	4.47993D-05	4.53101D-12	2.80481D-05
37.0	8.26857D-08	4.48820D-05	1.39712D-11	2.80481D-05
38.0	4.18999D-07	4.53010D-05	1.05253D-09	2.80492D-05
39.0	2.05933D-07	4.55069D-05	1.53907D-11	2.80492D-05
40.0	6.26695D-08	4.55696D-05	8.70250D-11	2.80493D-05
	DEVIATION ON CUMULATIVE TOTALS =		2.15163D-06	1.72711D-06

Table C-34
PIPING SEGMENT SW-04 FAILURE PROBABILITY WORKSHEET

Surry Unit 1
System: SW Segment: SW-004, 005, 006 Failure Mode(s): Wastage/Pitting Location: 163L Class Pipe - Weld at Reducer on 2" side

No.	Input Parameter Description	Circle Choice or Set Value			Set Value	Basis
1	Type of Piping Material	304SS	316SS	Carbon Steel		163L - Drawing/Spec
2	Crack Inspection Interval (optional)	Low(6)	Medium(10)	High(14)		Section XI
3	Crack Inspection Accuracy (optional)	High(.16)	Medium(.24)	Low(.32)		RT
4	Temperature at Pipe Weld	Low(150)	Medium(350)	High(550)	95	Line List
5	Nominal Pipe Size	Small(2)	Medium(5)	Large(16)	2	Drawing
6	Thickness to O.D. Ratio	Thin(.05)	Normal(.13)	Thick(.21)	.06	Calc.
7	Normal Operating Pressure	Low(0.5)	Medium(1.3)	High(2.1)	.025	Line List
8	Residual Stress Level	None(0.0)	Moderate(10)	Maximum(20)	5	Judgment - fillet
9	Initial Flaw Conditions	One Flaw	X-Ray NDE	No X-Ray		Spec.
10	DW & Thermal Stress Level	Low(.05)	Medium(.11)	High(.17)	.038	Calc.
11	Stress Corrosion Potential	None(0.0)	Moderate(0.5)	Maximum(1.0)		Judgment
12	Material Wastage Potential	None(0.0)	Moderate(0.5)	Maximum(1.0)	1.0	Judgment
13	Vibratory Stress Range	None(0.0)	Moderate(1.5)	Maximum(3.0)		Judgment
14	Fatigue Stress Range	Low(.30)	Medium(.50)	High(.70)		Judgment
15	Low Cycle Fatigue Frequency	Low(10)	Medium(20)	High(30)		Judgment
16	Design Limiting Stress (LL/Break Only)	Low(.10)	Medium(.26)	High(.42)	.017	Calc.
17	System Disabling Leak (Large Leak Only)	None(0)	Medium(300)	High(600)	10	10% of 2" pipe flow
18	Min. Detectable Leak (LL/Break Only)	None(0)	Medium(5)	High(10)	1	1 gpm - Pump PT accessible

No Leak Detection
Small Leak Prob., No ISI: 3.4793E-4 Small Leak Prob., With ISI: 9.7512E-6
Large Leak Prob., No ISI: 9.3320E-5 Large Leak Prob., With ISI: 7.0519E-7 (N/A if not applicable)
Break Prob., No ISI: N/A Break Prob., With ISI: N/A (N/A if not applicable)

No Leak Detection(Snubber locking up under Thermal Conditions, Item 14 set at N/A .)(Snubber failure probability set at N/A .)(N/A if not applicable)
Small Leak Prob., No ISI: Small Leak Prob., With ISI: (N/A if not applicable)
Large Leak Prob., No ISI: Large Leak Prob., With ISI: (N/A if not applicable)
Break Prob., No ISI: Break Prob., With ISI: (N/A if not applicable)

No Leak Detection(Snubber not locking up under Seismic Conditions, Item 16 set at N/A .)(Snubber failure probability set at N/A .)(N/A if not applicable)
Large Leak Prob., No ISI: Large Leak Prob., With ISI: (N/A if not applicable)
Break Prob., No ISI: Break Prob., With ISI: (N/A if not applicable)

Leak Detection (with Snubber failure if most limiting)
Large Leak Prob., No ISI: 1.0665E-5 Large Leak Prob., With ISI: 2.9987E-7 (N/A if not applicable)
Break Prob., No ISI: N/A Break Prob., With ISI: N/A (N/A if not applicable)

Comments:
No Snubbers.
Fiberglass piping failure probability set at 1E-2 for small leak and large leak (based upon fatigue).

Table C-35
PIPING SEGMENT SW-04 SMALL LEAK FAILURE PROBABILITY
SRRA MODEL OUTPUT

Output Print File S6PROFSL.P03 Opened at 14:18 on 04-02-1997

Type of Piping Steel Material	316 St
Pipe Weld Failure Mode	Small Leak
Years Between Inspections	10.0
Wall Fraction for 50% Detection	0.160
Degrees (F) at Pipe Weld	95.0
Nominal Pipe Size (NPS, inch)	2.0
Thickness / Outside Diameter	0.0600
Operating Pressure (ksi)	0.25
Uniform Residual Stress (ksi)	5.0
Flaw Factor (<0 for 1 Flaw)	12.80
DW & Thermal Stress / Flow Stress	0.04
SCC Rate / Rate for BWR Sens. SS	0.00
Factor on Wastage of .0095 in/yr	1.00
P-P Vib. Stress (ksi for NPS of 1)	0.0
Cyclic Stress Range / Flow Stress	0.300
Fatigue Cycles per Year	20.0
Design-Limit Stress / Flow Stress	0.017
System Disabling Leak Rate (GPM)	10.0
Minimum Detectable Leak Rate (GPM)	0.0
Value of Weld Metal Flow Stress in Ksi	72.44

STRUCTURAL RELIABILITY AND RISK ASSESSMENT (SRRA)
WESTINGHOUSE PROBABILITY OF FAILURE PROGRAM LEAKPROF ESBU-NSD

INPUT VARIABLES FOR CASE 3: 316 St Steel Pipe Segment SW-4;5;6

NCYCLE = 40 NFAILS = 400 NTRIAL = 40000
NOVARS = 28 NUMSET = 6 NUMISI = 5
NUMSSC = 6 NUMTRC = 6 NUMFMD = 5

VARIABLE NO.	NAME	DISTRIBUTION TYPE	LOG	MEDIAN VALUE	DEVIATION OR FACTOR	SHIFT MV/SD	USAGE NO.	SUB
1	PIPE-ODIA	NORMAL	NO	2.3750D+00	1.6000D-02	.00	1	SET
2	WALL/ODIA	NORMAL	NO	6.0000D-02	1.8600D-03	.00	2	SET
3	SRESIDUAL	NORMAL	YES	5.0000D+00	1.4142D+00	.00	3	SET
4	INT%DEPTH	NORMAL	YES	3.9953D+01	1.1840D+00	2.00	4	SET
5	L/D-RATIO	NORMAL	YES	6.0000D+00	1.7126D+00	1.00	5	SET
6	FLAWS/IN	- CONSTANT -		6.9762D-02			6	SET
7	FIRST-ISI	- CONSTANT -		5.0000D+00			1	ISI
8	FREQ-ISI	- CONSTANT -		1.0000D+01			2	ISI
9	EPST-PND	- CONSTANT -		1.0000D-03			3	ISI
10	ASTAR-PND	- CONSTANT -		-1.6000D-01			4	ISI
11	ANUU-PND	- CONSTANT -		1.6000D+00			5	ISI
12	HOURS/YR	NORMAL	YES	7.4473D+03	1.0500D+00	.00	1	SSC
13	PRESSURE	NORMAL	YES	2.5000D-01	1.0323D+00	.00	2	SSC
14	SIG-DW&TH	NORMAL	YES	2.7527D+00	1.2599D+00	.00	3	SSC
15	SCC-COEFF	NORMAL	YES	3.2310D-12	2.3714D+00	.00	4	SSC
16	SCC-EXPNT	- CONSTANT -		2.1610D+00			5	SSC
17	WASTAGE	NORMAL	YES	1.2740D-09	2.3714D+00	.00	6	SSC
18	DSIG-VIBR	NORMAL	YES	8.1948D-04	1.3465D+00	.00	1	TRC
19	CYCLES/YR	- CONSTANT -		2.0000D+01			2	TRC
20	DSIG-FATG	NORMAL	YES	2.1732D+01	1.4142D+00	.00	3	TRC
21	FCG-COEFF	NORMAL	YES	9.1401D-12	2.8508D+00	1.00	4	TRC
22	FCG-EXPNT	- CONSTANT -		4.0000D+00			5	TRC
23	FCG-THOLD	- CONSTANT -		1.5000D+00			6	TRC
24	LDEPTH-SL	- CONSTANT -		-9.9900D-01			1	FMD
25	SIG-FLOW	NORMAL	NO	7.2439D+01	3.2000D+00	.00	2	FMD

Table C-35 (cont.)
PIPING SEGMENT SW-04 SMALL LEAK FAILURE PROBABILITY
SRRA MODEL OUTPUT

26	STRESS-DL	- CONSTANT -	0.0000D+00	3	FMD
27	B-SDLEAK	- CONSTANT -	0.0000D+00	4	FMD
28	B-MDLEAK	- CONSTANT -	0.0000D+00	5	FMD

PROBABILITIES OF FAILURE MODE: THROUGH-WALL CRACK DEPTH FOR SMALL LEAK

NUMBER FAILED = 400 NUMBER OF TRIALS = 6231

END OF YEAR	FAILURE PROBABILITY WITHOUT AND FOR PERIOD	CUM. TOTAL	WITH IN-SERVICE INSPECTIONS FOR PERIOD	CUM. TOTAL
1.0	1.68675D-07	1.68675D-07	1.68675D-07	1.68675D-07
2.0	8.09942D-08	2.49670D-07	8.09942D-08	2.49670D-07
3.0	4.36649D-06	4.61616D-06	4.36649D-06	4.61616D-06
4.0	1.68354D-06	6.29970D-06	1.68354D-06	6.29970D-06
5.0	5.99626D-07	6.89932D-06	5.99626D-07	6.89932D-06
6.0	3.22421D-06	1.01235D-05	8.01170D-09	6.90733D-06
7.0	1.11108D-06	1.12346D-05	1.95106D-09	6.90928D-06
8.0	1.90092D-06	1.31355D-05	2.64217D-09	6.91193D-06
9.0	1.61321D-05	2.92677D-05	8.44600D-07	7.75653D-06
10.0	1.51785D-05	4.44462D-05	1.77084D-06	9.52737D-06
11.0	6.14651D-07	4.50608D-05	8.68505D-10	9.52824D-06
12.0	3.94516D-06	4.90060D-05	7.54126D-08	9.60365D-06
13.0	2.12864D-05	7.02924D-05	1.30008D-07	9.73366D-06
14.0	2.12798D-06	7.24204D-05	4.30191D-09	9.73796D-06
15.0	3.12126D-07	7.27325D-05	3.88657D-09	9.74185D-06
16.0	2.23936D-05	9.51261D-05	1.08247D-09	9.74293D-06
17.0	5.83434D-06	1.00960D-04	1.42498D-10	9.74307D-06
18.0	1.21247D-05	1.13085D-04	2.97019D-09	9.74604D-06
19.0	3.79691D-06	1.16882D-04	2.48304D-11	9.74607D-06
20.0	5.06567D-06	1.21948D-04	3.24158D-11	9.74610D-06
21.0	2.63866D-06	1.24586D-04	3.59468D-11	9.74613D-06
22.0	2.88784D-06	1.27474D-04	1.47138D-11	9.74615D-06
23.0	6.72631D-06	1.34201D-04	6.16649D-11	9.74621D-06
24.0	3.00307D-06	1.37204D-04	1.11170D-10	9.74632D-06
25.0	8.99674D-06	1.46200D-04	7.43563D-10	9.74707D-06
26.0	9.46188D-06	1.55662D-04	1.84386D-12	9.74707D-06
27.0	6.91703D-06	1.62579D-04	8.25949D-12	9.74708D-06
28.0	4.62285D-06	1.67202D-04	9.75302D-13	9.74708D-06
29.0	8.75900D-05	2.54792D-04	4.16906D-09	9.75125D-06
30.0	2.80004D-06	2.57592D-04	4.11208D-12	9.75125D-06
31.0	3.02396D-06	2.60616D-04	2.67371D-14	9.75125D-06
32.0	1.15533D-05	2.72169D-04	1.51220D-11	9.75126D-06
33.0	2.56739D-06	2.74737D-04	3.38600D-14	9.75126D-06
34.0	1.54113D-06	2.76278D-04	2.55637D-13	9.75126D-06
35.0	3.71838D-07	2.76650D-04	5.85880D-16	9.75126D-06
36.0	1.09185D-05	2.87568D-04	1.07253D-15	9.75126D-06
37.0	1.08667D-05	2.98435D-04	1.02031D-15	9.75126D-06
38.0	2.36529D-05	3.22088D-04	2.61787D-12	9.75127D-06
39.0	1.41398D-05	3.36228D-04	3.77205D-14	9.75127D-06
40.0	1.17076D-05	3.47935D-04	4.95532D-14	9.75127D-06
	DEVIATION ON CUMULATIVE TOTALS =		1.68305D-05	2.91000D-06

Table C-36
PIPING SEGMENT SW-04 LARGE LEAK FAILURE PROBABILITY
SRRA MODEL OUTPUT

Output Print File S6PROFLL.P04 Opened at 14:21 on 04-02-1997

Type of Piping Steel Material	316 St
Pipe Weld Failure Mode	Large Leak
Years Between Inspections	10.0
Wall Fraction for 50% Detection	0.160
Degrees (F) at Pipe Weld	95.0
Nominal Pipe Size (NPS, inch)	2.0
Thickness / Outside Diameter	0.0600
Operating Pressure (ksi)	0.25
Uniform Residual Stress (ksi)	5.0
Flaw Factor (<0 for 1 Flaw)	12.80
DW & Thermal Stress / Flow Stress	0.04
SCC Rate / Rate for BWR Sens. SS	0.00
Factor on Wastage of .0095 in/yr	1.00
P-P Vib. Stress (ksi for NPS of 1)	0.0
Cyclic Stress Range / Flow Stress	0.300
Fatigue Cycles per Year	20.0
Design-Limit Stress / Flow Stress	0.017
System Disabling Leak Rate (GPM)	10.0
Minimum Detectable Leak Rate (GPM)	0.0
Value of Weld Metal Flow Stress in Ksi	72.44

STRUCTURAL RELIABILITY AND RISK ASSESSMENT (SRRA)
WESTINGHOUSE PROBABILITY OF FAILURE PROGRAM LEAKPROF ESBU-NSD

INPUT VARIABLES FOR CASE 4: 316 St Steel Pipe Segment SW-4;5;6

NCYCLE = 40 NFAILS = 400 NTRIAL = 50000
NOVARS = 28 NUMSET = 6 NUMISI = 5
NUMSSC = 6 NUMTRC = 6 NUMFMD = 5

VARIABLE NO.	NAME	DISTRIBUTION TYPE	LOG	MEDIAN VALUE	DEVIATION OR FACTOR	SHIFT MV/SD	USAGE NO.	SUB
1	PIPE-ODIA	NORMAL	NO	2.3750D+00	1.6000D-02	.00	1	SET
2	WALL/ODIA	NORMAL	NO	6.0000D-02	1.8600D-03	.00	2	SET
3	SRESIDUAL	NORMAL	YES	5.0000D+00	1.4142D+00	.00	3	SET
4	INT%DEPTH	NORMAL	YES	3.9953D+01	1.1840D+00	2.00	4	SET
5	L/D-RATIO	NORMAL	YES	6.0000D+00	1.7126D+00	2.00	5	SET
6	FLAWS/IN	- CONSTANT -		6.9762D-02			6	SET
7	FIRST-ISI	- CONSTANT -		5.0000D+00			1	ISI
8	FREQ-ISI	- CONSTANT -		1.0000D+01			2	ISI
9	EPST-PND	- CONSTANT -		1.0000D-03			3	ISI
10	ASTAR-PND	- CONSTANT -		-1.6000D-01			4	ISI
11	ANUU-PND	- CONSTANT -		1.6000D+00			5	ISI
12	HOURS/YR	NORMAL	YES	7.4473D+03	1.0500D+00	.00	1	SSC
13	PRESSURE	NORMAL	YES	2.5000D-01	1.0323D+00	.00	2	SSC
14	SIG-DW&TH	NORMAL	YES	2.7527D+00	1.2599D+00	.00	3	SSC
15	SCC-COEFF	NORMAL	YES	3.2310D-12	2.3714D+00	.00	4	SSC
16	SCC-EXPNT	- CONSTANT -		2.1610D+00			5	SSC
17	WASTAGE	NORMAL	YES	1.2740D-09	2.3714D+00	.00	6	SSC
18	DSIG-VIBR	NORMAL	YES	8.1948D-04	1.3465D+00	.00	1	TRC
19	CYCLES/YR	- CONSTANT -		2.0000D+01			2	TRC
20	DSIG-FATG	NORMAL	YES	2.1732D+01	1.4142D+00	.00	3	TRC
21	FCG-COEFF	NORMAL	YES	9.1401D-12	2.8508D+00	1.00	4	TRC
22	FCG-EXPNT	- CONSTANT -		4.0000D+00			5	TRC
23	FCG-THOLD	- CONSTANT -		1.5000D+00			6	TRC
24	LDEPTH-SL	- CONSTANT -		0.0000D+00			1	FMD
25	SIG-FLOW	NORMAL	NO	7.2439D+01	3.2000D+00	.00	2	FMD

Table C-36 (cont.)

PIPING SEGMENT SW-04 LARGE LEAK FAILURE PROBABILITY
SRRA MODEL OUTPUT

26	STRESS-DL	NORMAL	YES	1.2315D+00	1.4142D+00	.00	3	FMD
27	B-SDLEAK	- CONSTANT -		7.4613D+00			4	FMD
28	B-MDLEAK	- CONSTANT -		7.4613D+00			5	FMD

PROBABILITIES OF FAILURE MODE: EXCEED DISABLING LEAK RATE OR BREAK

NUMBER FAILED = 400 NUMBER OF TRIALS = 14500

END OF YEAR	FAILURE PROBABILITY WITHOUT FOR PERIOD	CUM. TOTAL	AND WITH IN-SERVICE INSPECTIONS FOR PERIOD	CUM. TOTAL
1.0	4.47159D-12	4.47159D-12	4.47159D-12	4.47159D-12
2.0	4.53694D-11	4.98410D-11	4.53694D-11	4.98410D-11
3.0	3.58988D-07	3.59038D-07	3.58988D-07	3.59038D-07
4.0	1.02973D-09	3.60068D-07	1.02973D-09	3.60068D-07
5.0	3.39609D-07	6.99677D-07	3.39609D-07	6.99677D-07
6.0	1.20387D-06	1.90354D-06	1.22417D-09	7.00901D-07
7.0	7.71967D-07	2.67551D-06	8.03318D-10	7.01704D-07
8.0	1.43489D-07	2.81900D-06	1.46276D-10	7.01850D-07
9.0	5.83709D-07	3.40271D-06	5.94038D-10	7.02445D-07
10.0	5.42957D-07	3.94567D-06	5.70273D-10	7.03015D-07
11.0	9.71261D-07	4.91693D-06	9.87671D-10	7.04002D-07
12.0	2.05344D-07	5.12227D-06	2.09279D-10	7.04212D-07
13.0	8.96293D-09	5.13123D-06	1.06631D-11	7.04222D-07
14.0	5.59281D-07	5.69052D-06	8.01195D-10	7.05024D-07
15.0	1.16427D-07	5.80694D-06	1.32938D-10	7.05157D-07
16.0	1.01018D-08	5.81704D-06	1.47107D-14	7.05157D-07
17.0	1.38847D-07	5.95589D-06	2.59078D-13	7.05157D-07
18.0	2.49703D-07	6.20559D-06	2.82860D-13	7.05157D-07
19.0	5.91051D-06	1.21161D-05	2.45604D-11	7.05182D-07
20.0	2.98392D-07	1.24145D-05	7.78344D-13	7.05182D-07
21.0	6.20886D-08	1.24766D-05	8.56556D-14	7.05183D-07
22.0	1.55247D-07	1.26318D-05	2.09962D-13	7.05183D-07
23.0	9.35290D-08	1.27254D-05	1.34603D-13	7.05183D-07
24.0	5.27082D-07	1.32524D-05	1.45966D-12	7.05184D-07
25.0	1.57152D-06	1.48240D-05	6.62705D-12	7.05191D-07
26.0	6.23501D-06	2.10590D-05	1.26675D-13	7.05191D-07
27.0	1.17898D-06	2.22380D-05	5.37125D-15	7.05191D-07
28.0	2.21778D-06	2.44557D-05	4.44289D-15	7.05191D-07
29.0	6.47595D-07	2.51033D-05	1.38936D-15	7.05191D-07
30.0	3.23230D-06	2.83356D-05	5.91452D-13	7.05192D-07
31.0	1.35281D-06	2.96884D-05	6.84518D-15	7.05192D-07
32.0	2.72396D-06	3.24124D-05	4.66115D-14	7.05192D-07
33.0	2.03292D-07	3.26157D-05	4.56785D-16	7.05192D-07
34.0	3.14936D-07	3.29306D-05	8.71897D-16	7.05192D-07
35.0	4.92516D-07	3.34232D-05	2.70981D-15	7.05192D-07
36.0	4.62389D-07	3.38855D-05	1.71744D-18	7.05192D-07
37.0	3.04058D-07	3.41896D-05	5.80665D-19	7.05192D-07
38.0	5.20779D-05	8.62675D-05	7.85445D-14	7.05192D-07
39.0	5.46281D-06	9.17303D-05	2.42959D-16	7.05192D-07
40.0	1.59019D-06	9.33205D-05	2.25975D-17	7.05192D-07
	DEVIATION ON CUMULATIVE TOTALS =		4.60138D-06	4.05585D-07

APPENDIX D
SRRA CODE DESCRIPTION

Information now contained in WCAP-14572, Revision 1-NP-A, Supplement 1.

APPENDIX E
BENCHMARKING OF SRRA CODE

Information now contained in WCAP-14572, Revision 1-NP-A, Supplement 1.

APPENDIX F
RELATED WOG AND ACRS CORRESPONDENCE

Note: The WOG letters provided in this appendix contain the changes suggested to be made to the WCAP based on NRC staff review of the submitted WOG Topical Report. These recommended changes have been incorporated into the accepted version of the report. One WOG letter is referenced in the NRC's SER, while the other letter is referenced in an NRC Advisory Committee on Reactor Safeguards (ACRS) letter also included in this appendix. The ACRS letter contains the review and recommendations of the ACRS based on their review of the submitted WOG Topical Report.

Westinghouse Electric Corporation
Energy Systems
Box 355
Pittsburgh Pennsylvania 15230-0355

OG-98-103

September 30, 1998

Mr. Peter C. Wen
Project Manager,
Generic Issues and Environmental Projects Branch
Nuclear Regulatory Commission
Washington, DC 20555-0001

Subject: **Westinghouse Owners Group**
Transmittal of Responses to NRC Open Items on WOG RI-ISI Program and Reports: WCAP-14572, Revision 1 [Non-Proprietary] "WOG Application of Risk-Informed Methods to Piping Inservice Inspection Topical Report and WCAP-14572, Revision 1, Supplement 1 [[Non-Proprietary] "Westinghouse Structural Reliability and Risk Assessment (SRRA) Model for Piping Risk-Informed Inservice Inspection" (MUHP-5091)

Reference: 1) NEI Letter from Mr. Anthony R. Pietrangelo Nuclear Energy Institute, to Dr. Brian Sheron of NRC Subject: Transmittal of Reports WCAP-14572, Rev. 1 NP & WCAP-14572, Rev. 1 Supplement 1 NP, dated October 10, 1997

2) NRC Letter from Peter C. Wen, NRC to Andrew Drake, Westinghouse Owners Group, "Open Items Related to Westinghouse Owners Group Application of Risk-Informed Methods to Piping Inservice Inspection (WCAP-14572, Revision 1)," dated September 2, 1998

Dear Mr. Wen:

Enclosed are the Westinghouse Owners Group (WOG) responses to Nuclear Regulatory Commission (NRC) Open Items transmitted per Reference 2. These Open Items were reviewed in a meeting between the NRC and WOG on September 22, 1998. The enclosure shows the revisions made to the responses to the open items as agreed to by the NRC and WOG during the September 22, 1998 meeting. It should be noted that the response to open item 8 e), regarding the documentation to be submitted to NRC and that which remains on site, may be changed based on the results of and consensus from the NEI/NRC meeting on this subject currently scheduled for October 8, 1998.

98og103.doc

It is our understanding that these responses will complete the NRC review of the WOG Topical reports identified in Reference 1 and we look forward to receiving the NRC safety evaluation report (SER) by December 1998.

This letter and enclosed responses should be considered as a commitment by the WOG to include the information cited in the responses into the WOG Topical Reports. In addition, the NRC's Safety Evaluation Report (SER) when received will be included into an NRC-approved (A version) of the Topical Reports verbatim inside the front cover.

Please direct any questions or comments to Mr. Ken Balkey, Westinghouse, at (412)-374-4633 or Ms. Nancy Closky, Westinghouse, at (412)-374-5916.

Very truly yours,

Louis F. Liberatori, Jr., Chairman
Westinghouse Owners Group

Enclosure

cc: (all I L)
Dr. Brian Sheron, NRC
Mr. Gary Holahan, NRC
Dr. Goutam Bagchi, NRC
Dr. Syed Ali, NRC
Mr. Ashok Thadani, NRC
Mr. Gus Lainas, NRC
Mr. Ralph Beedle, NEI
Mr. Anthony Pietrangelo, NEI
Mr. Biff Bradley, NEI
Mr. Alex Marion, NEI
Mr. Ernie Throckmorton, VP
WOG Steering Committee
WOG Materials Subcommittee
WOG Risk-Based Technology Working Group
M. M. DeWitt - ECE 5-36
N. J. Liparulo - ECE 4-15
A. P. Drake - ECE 5-16
S. D. Rupprecht - ECE 4-15
H. A. Sepp - ECE 4-07A

98og103.doc

Response to Open Items Related to WOG Application of Risk-Informed Methods to Piping Inservice Inspection (WCAP-14572, Revision 1)

1. The WCAP topical report states that the number of welds, fittings, or lengths of pipe is not incorporated into the estimated failure probabilities for a pipe segment. Most welds, or fittings, in a pipe segment, though, would have some finite probability of a failure. Therefore, the probability of a failure in a pipe segment should increase with the number of welds in the segment. Justification other than assuming common mode failure is required for ignoring the number of welds (or fittings) in a segment (INEEL Open Item 2).

   Response:

   The intent of the failure probability estimation is to postulate the potential failure mechanism(s) for a given piping segment and then, based on the specific conditions for the given piping segment (not an individual weld in the piping segment) to provide an estimate of the failure probability for the piping segment, in order to differentiate the piping segments based on potential failure mechanism and postulated consequences. The objective of RI-ISI is to perform an inspection for cause (failure mechanism) and the intent is to show that the quantity of random inspections is less beneficial than fewer quality inspections focused on piping locations that have the highest likelihood of failure.

   The failure probability of a segment is characterized by the failure potential (probability or frequency as appropriate) of the worst case situation in each segment (not a single selected weld in each segment). This is calculated by the SRRA code by inputting the conditions (typically, the most limiting or bounding) for the entire piping segment. Essentially, the piping failure probability is a representation or characterization of the piping segment.

   Failures in a piping segment due to the dominating mechanisms are correlated, not independent, and the dependencies can not be specifically identified quantitatively. Piping welds in a segment are typically fabricated with the same materials and processes and subjected to the same types of operating conditions, such as flow medium, pressure, temperature, seismic loading. Since the types of potential degradation mechanisms would therefore be similar for the limiting welds in a segment, the weld failures would more correctly be characterized as correlated. Correlated means they would all have comparable trends, such as all being relatively high or low, but not both. The combining of all significant degradation mechanisms for the segment probability would be even more correlated than the individual locations with those mechanisms. As an example, for degradation due to stress corrosion cracking, potential fabrication flaws due to welding, high residual stresses due to welding restraint, and sensitized material

due to lack of proper heat treating and a corrosive environment would all be required to produce a failure, such as a through wall leak. The chance of all welds being equally susceptible to failure is in reality very small. Physically, the weld with the highest failure probability at a given time would be the one expected to fail first (either on demand or in response to a loading) and thus result in a piping failure in the segment. Since its probability is typically several orders of magnitude higher than those without the dominating mechanisms, which are more independent probabilities that are primarily controlled by the random combination of uncertainties, adding all of the lower valued but more independent probabilities would not significantly change the numerical value for the segment. Although there may be several candidate locations, the failure experience to date indicates that only one structural weld fails at a time and it is generally the weld subjected to the most severe conditions. Therefore, we believe that the sum of the failure probabilities of all welds is not appropriate for the determination of the segment safety significance.

The differences in the WOG and NRC Open Item approaches to estimating the failure probability for the piping segment can best be illustrated by the following example.

Suppose Segment A contains one (1) weld and the failure mechanism postulated is stress corrosion cracking (SCC), and this results in a failure probability FP= 1E-03. Suppose Segment B contains 100 welds with the default failure mechanism of thermal fatigue and this results in a failure probability FP=1E-04). Both segments have similar consequences. By the proposed RAI method, Segment B may be ranked as HSSC (segment FP = 1E-02) and Segment A may be ranked as LSSC (segment FP = 1E-03). In the ranking proposed by WOG, Segment A may be ranked as HSSC and Segment B as LSSC.

Based on the Perdue Model results, under the proposed NRC Open Item~~RAI~~ approach, Segment B may need only 1 weld to be inspected with a default failure mechanism (low probability that a significant flaw exists) and in which an inspection would not be expected to be useful. Under WOG approach, Segment A would have 1 weld inspected with a dominant degradation mechanism present (probability of a significant flaw is higher than for thermal fatigue) and in which an inspection would be expected to be useful. That is, the probability of finding something during the inspection would be at least ten times higher in segment A relative to segment B.

The objective of RI-ISI to inspect based on safety significance and dominant piping failure mechanisms is satisfied using the WOG method at Surry. The proposed NRC Open Item ~~RAI~~ approach does not focus specifically on failure mechanism but more on the number of welds. Therefore, our approach is acceptable. We have included additional clarification of our approach as described below.

The following will be added to the WCAP after the first paragraph under Section 3.5 (page 71).

> *"The intent of the failure probability estimation is to postulate the potential failure mechanism(s) for a given piping segment and then, based on the specific conditions for the given piping segment (not an individual weld in the piping segment) to provide an estimate of the failure probability for the piping segment, in order to differentiate the piping segments based on potential failure mechanism and postulated consequences. The failure probability of a segment is characterized by the failure potential (probability or frequency as appropriate) of the worst case situation in each segment (not a single selected weld in each segment). This is calculated by the SRRA code by inputting the conditions (typically, the most limiting or bounding) for the entire piping segment. Essentially, the piping failure probability is a representation or characterization of the piping segment. "*

In addition, the title for Section 3.5.4 (page 78), will be changed from "Consideration for Selection of Likely Failure Locations" to "Consideration of Likely Failure Mechanism(s)". Also in this section, the following sentences are revised:

First and second sentence, section 3.5.4 (page 78), "Selection of possible failure modes can have a significant influence on the estimated failure probability. One approach for identifying possible failure modes is to classify the pipe segment along the following lines:.. "

Page 79, paragraph before section 3.5.5, first sentence changed to read "If more than one degradation mechanism is present in a given piping segment, then the limiting values for each mechanism should be combined so that a limiting failure probability is calculated for risk ranking." ~~*"Determination of the most probable failure mechanism should consider the interaction of the all the likely degradation mechanisms for the piping segment under review."*~~ *Fourth sentence changed to read, "In such cases, interactions with other effects must be considered for determining the most likely mechanisms." Last sentence is deleted.*

Page 83, last paragraph, first sentence changed to read "For the WOG plant applications, structural reliability and risk assessment (SRRA) tools were used to estimate the failure probabilities for the piping segments."

Page 84, Replace second full paragraph with:

"Failures in a piping segment due to the dominating mechanisms are correlated, not independent, and the dependencies can not be specifically identified quantitatively. Piping welds in a segment are typically fabricated with the same materials and processes and subjected to the same types of operating conditions, such as flow medium, pressure, temperature, seismic loading. Since the types of potential degradation mechanisms would therefore be similar for the limiting welds in a segment, the weld failures would more correctly be characterized as correlated. Correlated means they would all have comparable trends, such as all being relatively high or low, but not both. The combining of all significant degradation mechanisms for the segment probability would be even more correlated than the individual locations with those mechanisms. Physically, the weld with the highest failure probability at a given time would be the one expected to fail first (either on demand or in response to a loading) and thus result in a piping failure in the segment. Since its probability is typically several orders of magnitude higher than those without the dominating mechanisms, the addition of all of these lower independent probabilities would not significantly change the numerical value for the segment."

2. The WCAP states that the median values for stresses were set equal to one-half the stress values calculated by ASME Code stress analysis. This may be appropriate for stresses due to seismic loads but seems to be too much of a reduction for stresses due to internal pressure, deadweight, and thermal expansion, since these stresses normally have much lesser uncertainty (INEEL Open Item 3).

   Response:

   See response to question 15(b), item f of the list included in the response.

3. The WCAP gives little specific information relative to the application of welding residual stresses in the SRRA models. WOG needs to describe the details of the residual stress distributions applied (for various pipe sizes and material) and explain the basis for these (INEEL Open Item 5).

   Response:

   The following insert will be added after the second paragraph in Section 2.3 (page 9) of WCAP-14572, Rev. 1, Supplement 1.

   "The maximum median residual stress of 20 ksi and a 2-sigma log-normal factor of 2 were selected to bound the maximum tensile residual stresses at the pipe weld I.D. for intermediate (10-20") and large (>20") sized stainless steel pipe. These residual stresses are given in the pc-PRAISE

User's Manual (Harris, Dedhia and Lu 1992) and are used to calculate probabilities of small leak due to IGSCC consistent with ihose that have been observed (see Figure 4-3). However, unlike pc-PRAISE, the residual stress is assumed to be constant through the weld wall and around the weld circumference in the SRRA models. Furthermore, no relaxation of residual stress is assumed for an initial fabrication flaw. Because of these conservatisms, the ASME Research task force members recommended that the residual stress calculated by the SRRA computer code be truncated at a maximum value equal to the yield strength regardless of the input values. To accommodate this change, the yield strength of the weld was assumed to be 90% of the flow stress in the modified SRRA code used for RI-ISI."

4. The WCAP does not mention the possibility of axial cracks, which could be of concern for the case of longitudinal welds. WOG should describe the failure criteria used to evaluate axial cracks in the SRRA models (INEEL Open Item 8).

Response:

The potential of having axial cracks which could initiate from longitudinal welds has received considerable evaluation by ASME Section XI. Industry experience with this type of crack initiation has shown that it is really not a serious concern and has a qualitatively low failure probability of occurrence due to the normal pressure and temperature ranges associated with nuclear operating plants. ASME Code Case N-524 was developed and issued by the ASME to no longer require any special consideration of these welds beyond the intersection point of circumferential welds. Based on this change in the requirements for inservice inspection, adding the following statement to the WCAP Supplement provides a sufficient response to this item.

The following insert will be added after the first paragraph in Section 3.1 (page 15) of WCAP-14572, Rev. 1, Supplement 1.

> *"The pressure stress, the number of initial flaws in a weld and pipe leak rate are all calculated assuming circular~~the~~ piping geometry with uniform wall thickness and flaws of concern being~~are~~ circumferentially oriented. In the rare situation that a longitudinal flaw in an axial weld or non-standard geometry would need to be evaluated, the failure probability should be estimated by other means (e.g., expert opinion or advanced modeling).*
>
> *The following insert will also be added to the second paragraph in section 3.1:*

" Caution should be particularly exercised when evaluating full pipe break probabilities with leak detection."

5. (a) According to the WCAP, the program PRODIGAL is used to calculate initial flaw characteristics for the piping welds and the program CLVSQ is used to calculate leak rates as a function of crack length. WOG should clarify whether the computer programs PRODIGAL and CLVSQ been appropriately verified and validated (INEEL Open Item 13).

Response:

Computer Program CLVSQ and the other SRRA computer codes for risk-informed ISI, such as LEAKMENU and LEAFPROF, were developed, verified, validated and controlled in accordance with the Westinghouse Quality Management System, which has been accepted by NRC as meeting the requirements of 10CFR50, Appendix B.

All of the results of the PRODIGAL computer code for RI-ISI ,including initial flaw density, median flaw depth and depth uncertainty, were provided by the Pacific Northwest National Laboratory as part of their SRRA independent review program for NRC (see NRC Memorandum to the File by Jack Guttman and Syed Ali, Meeting Summary - Meeting with the ASME Research on Nuclear Risk-Based Inservice Inspection Programs, dated December 10, 1996). PNNL's quality assurance program requirements would apply and the developer of the PRODIGAL computer code has stated that it meets ISO9001 requirements.

(b) The program PRODIGAL is used to calculate the number of flaws per weld length near the inner surface of the pipe. WOG should explain whether all such flaws calculated by PRODIGAL are treated as surface breaking flaws in the SRRA fracture calculations. If so, is the flaw density in the failure probability calculations adjusted to reduce the effect of flaws that are not actually surface flaws (Open Item 14, INEEL).

Response:

The following insert will be added after the first paragraph in Section 2.1 (page 7) of WCAP-14572, Rev. 1, Supplement 1.

"All near-surface flaws are assumed to be- inner surface breaking flaws. As discussed above, the stress intensity factor for the near-surface flaws (inner 25% of wall or innermost 2 weld passes) are conservatively calculated in the SRRA fracture mechanics models. Furthermore, the

flaw density used for the failure probability calculation is not reduced to eliminate the effect of flaws that are not actually surface flaws."

(c) The program CLVSQ uses a simplified correlation to calculate leak rates. Discuss the accuracy of this correlation and explain why the more detailed model of pc-PRAISE was simplified. Explain whether this simplification consistently errs on the conservative side (Open Item 15, INEEL).

Response:

The SRRA simplified leak rate correlation in the CLVSQ Program, as exemplified in Figure 2-4, was provided by Dr. David Harris, a developer of the PRAISE code and a member of the ASME Research Task Force on Development of Risk Based Inspection Guidelines. It was derived from an average of the flow rates from pc-PRAISE parametric studies involving pressures of 300, 1000 and 2235 psi, temperatures of 400 and 550 °F, 6 and 29 inch pipe sizes and various stress levels that affect the crack opening displacement. The accuracy of the correlation for fatigue type cracks was estimated to be ± 25%. This accuracy was judged to be acceptable by the ASME Research Task Force since PNNL member Fred Simonen's studies with pc-PRAISE showed that the large leak and break probabilities were relatively insensitive to the actual value of the detectable leak rate in the range from 0.3 to 300 gpm (see NRC Memorandum to the File by Jack Guttman and Syed Ali, Meeting Summary - Meeting with the ASME Research on Nuclear Risk-Based Inservice Inspection Programs, dated December 10, 1996). The more detailed pc-PRAISE models for leak rate also require very long run times on a personal computer since an iterative trial and error solution is required for each calculation of leak rate as a function of a very large number of postulated crack lengths.

The simplified leak rate model in CLVSQ is actually more accurate than the initial leak rate model described in the pc-PRAISE User's Manual, NUREG/CR-5864, July, 1992. This is because the crack opening displacement is now calculated in both models using a more accurate fracture mechanics (J-Integral) approach. When Lawrence Livermore National Laboratory (LLNL) provided Version 3.0 of pc-PRAISE to the NRC in April of 1993, the cover letter noted that when it was used for the 11 sample problems in NUREG/CR-5864, "the new leak rate calculation scheme does not appear to change the probability of a LOCA at all." Also "the effects of the new leak rate treatment on the leak probability calculations are noticeable, although hardly significant, only in a minority of cases. For instance, the probability of big leak at 40 years changes from 1.5×10^{-6} to 9.8×10^{-7} in Sample Problem 1 while the probability of a leak (small or big) changes from 8.5×10^{-2} to 1.6×10^{-1} in Sample problem

6." Sample problem 1 was for leaks due to fatigue crack growth while sample problem 6 was for leaks due to stress corrosion cracking.

(d) It is the staff's understanding that the existing correlation for leak rates is limited to PWR RCS conditions. WOG should address the applicability of those correlations to other plant conditions. Clarify whether the SRRA code can be applied to BWRs. If yes, justify the applicability of the correlations used to calculate leak rates under BWR operating conditions (RES Open Item 31).

Response:

Consistent with the response to Question 5c, the existing correlation for leak rates can be used for other plant conditions beyond the RCS. SRRA can be applied to BWRs; however, care must be exercised in applying this approach to BWR piping systems particularly those subjected to IGSCC. The following insert will also be added after the third paragraph in Section 2.2 (page 8) of WCAP-14572, Rev. 1, Supplement 1.

> *"Due to the differences in crack morphology, the PICEPS code would predict a larger leak rate for fatigue type cracks than cracks due to stress corrosion cracking (SCC) even if all other conditions were the same. Since most piping susceptible to SCC is also subject to fatigue loading, such as normal heat up and cool down, the leak rate correlation for fatigue type cracks was conservatively assumed for the CLVSQ Program. If the piping is shown to be subject to SCC and not fatigue, then the conservative SRRA over-prediction of SCC leak rate can be corrected by using the PICEPS computer code to calculate an equivalent fatigue crack leak rate corresponding to the desired SCC-only crack leak rate."*

6. The WCAP states that the high-cycle fatigue stress due to mechanical vibration is specified in the SRRA input for the small pipe size of 1 inch. A correction factor is applied to this stress to obtain the fatigue stress for other pipe sizes. The report identifies what these correction factors are for the other pipe sizes, but does not identify the value that is actually used for the high-cycle fatigue stress for the 1-inch pipe size (INEEL Open Item 16).

Response:

Vibration input for 1-inch pipe size is an input parameter determined by the SRRA user. The following insert will be added at the end of the second paragraph in Section 2.3 (page 9) of WCAP-14572, Rev. 1, Supplement 1.

"To accommodate this change, the affected simplified input parameter is now the peak-to-peak vibratory stress range in ksi corresponding to a one-inch pipe size. For example, if a 1-ksi stress range is estimated for the 10-inch pipe being evaluated, then an equivalent 6-ksi range for a one-inch pipe size would be input so it would be factored correctly to the desired 1-ksi stress range."

7. (a) Figure 4-2 of the WCAP Supplement 1 presents a comparison of SRRA model predictions with industry plant data relative to the probability of violating minimum wall thickness criteria because of flow accelerated corrosion wastage. The graph indicates that the SRRA model tends to over predict the failure probability early in plant life and to under predict later in life. WOG should provide an explanation for this behavior that may be used to refine the model (INEEL Open Item 17).

Response:

The industry observed failure rates due to wastage are within a factor of 2 to 3 of the SRRA calculated values even though the calculation was based upon data averaged values of pipe size and wall thickness. Since the observed failure rate was based upon years since operating license, a constant value for the number of hours at full flow per year was assumed because the number of actual operating hours was not in the industry plant database. The minor over prediction early in life is due to lower plant startup capacity factors (fraction of time at full power and flow) while the minor under prediction later in life is due to higher capacity factors during this more mature period of plant operation.

(b) Supplement 1 to WCAP provides information on assumptions made in the SRRA wall thinning model. However, it appears that many users could have difficulty in relating inputs to the model with the type of information available to plant technical staff. In addition, users may not have sufficient insight into the assumptions behind the wall thinning model to perform calculations in a correct and consistent manner. WCAP should provide guidance for plant personnel executing the SRRA Code for FAC that provides reasonable assurance that the calculated results for FAC failure probabilities are appropriate (RES Open Item 27).

Response:

The response is included in item h in the response to question 15(b)

The following insert will be added after the eleventh reference in Section 6 (page 55) of WCAP-14572, Rev. 1, Supplement 1.

"Chexal, B. et al., "CHECWORKS Flow Accelerated Corrosion, Version 1.0F, User Guide," Final Report TR-103198-P1, Electric Power Research Institute, June, 1998."

8. (a) One issue of this element is not fully addressed by the methodology is the process by which to identify the scope of plant systems to be included in the RI-ISI proposed program is considered, but plant safety functions that rely on the affected piping have not been identified (INEEL Open Item 20).

Response:

Page 51 of the WCAP, last paragraph, after the first sentence, the following will be added: "The safety functions of the plant systems identified through the Maintenance Rule should be reviewed to ensure all plant safety functions have been appropriately considered for the scope of the risk-informed ISI program."

In addition, WCAP-14572 will be revised to specifically state that the safety function(s) of the system and piping segment being reviewed should be presented to the Expert Panel. Table 3.6-9 will be revised to show the latest version of the Expert Panel Evaluation Segment Ranking Worksheet with a System Function item added to Section 1 of the table. Table 3.6-10 will be revised to change the definition of Section 1 to "This section contains information describing the system, the segment, plant drawing references, and the system and piping segment safety functions."

It was clarified at the September 22, 1998 meeting that this item dealt with partial scope programs. The response to this item is provided as part of the "Additional Notes" at the end of the open items.

(b) Operator action to isolate a break and mitigate the immediate consequences of the break are credited in the ISI analysis. For example, an operator closing an MOV will stop the loss of water from a break downstream of the MOV. The methodology does not recommend assigning a probability that the operator(s) fail to perform the action. Instead, two sets of calculations are performed, one assuming all such actions are successful and one assuming that all such actions fail. The RRW and RAW measures are calculated for these different assumptions. The WCAP states that if any of the results are greater than the RRW guidelines, they are highlighted. It is not clear if the segment is assumed to be high safety significant. The staff finds the use of these sensitivity studies to bound the possible impact of the operator's attempts to mitigate the event acceptable because a quantitative estimate of such unusual actions under such unusual conditions would not increase the precision of

the results and may, in fact, obscure important results (SPSB Open Item 44).

Response:

The intent of the methodology is to consider a segment to be high safety-significant if the RRW is greater than 1.005 for either the base case (operator action to mitigate the effects of the break not assumed) CDF or LERF calculations, or the sensitivity case (operator action assumed successful) CDF or LERF calculations. This safety significance consideration is either confirmed or changed by the expert panel during the panel review process.

Page 110 of WCAP-14572, last paragraph, the following is added:

"Segments are initially classified~~s segments~~ as high safety-significant if the RRW is greater than 1.005 for the CDF or LERF calculations with or without operator action. Segments with RRW values between 1.001 and 1.004 are deemed to be worthy of additional consideration by the plant expert panel. This safety significance consideration is either confirmed or changed by the expert panel during the panel review process."

(c) The staff finds the expert panel process and information presented in the worksheets as meeting the intent of the integrated decision-making process, as discussed in RG 1.1.74 and 1.178, in that traditional, PRA, deterministic, qualitative and quantitative insights are integrated in identification of HSS piping segments. However, no guidance to the expert panel is presented in the WCAP that provides consistency in categorization of piping segments among the various licensees who apply the WCAP method. WCAP needs to provide guidance that ensures consistency among the licensees (RES Open Item 43).

Response:

Additional general guidance for the expert panel will be added to Section 3.6.3, and a reference to it will be added to Section 5.6. A caution is noted with regard to the NRC request for "guidance that ensures consistency among the licensees." Following the overall process in WCAP-14572 and the guidance for the expert panel will result in consistency among licensees with respect to the method used. However, the results, in terms of the segments classified as high safety-significant, may be different from plant to plant due to differences in plant design, operation, procedures, and operational concerns (e.g., some segments could be added to the inspection program for plant availability reasons).
Section 3.6.3 will be revised to read -

"The expert panel (such as the expert panel used for the Maintenance Rule) evaluates the risk-informed results and makes a final decision by identifying the high safety-significant pipe segments for ISI. The piping segments that have been determined by quantitative methods to be high safety significant should not be classified lower by the expert panel without sufficient justification that is documented as part of the program. The expert panel should be focused primarily on adding piping segments to the higher classification. The expert panel may feedback comments to the appropriate engineering personnel which may cause an adjustment of the numerical results. Adjusted numerical results should be reviewed by the expert panel. The expert panel should:

- *Consider the PSA failure probability information, which initially classifies segments as high safety-significant if the RRW is greater than 1.005 for the CDF or LERF calculations with or without operator action. Consider the RAW values for additional insights. Segments with RRW values between 1.001 and 1.004 are deemed to be worthy of additional consideration.*

- *Consider other deterministic factors to assess the segment safety significance (refer to Section 3.6.2)*

- *Evaluate segments with similar consequences and/or failure probabilities in a similar manner to ensure classification consistency among segments within a system and between systems.*

- *Obtain a consensus decision for the safety significance of each segment. If a consensus cannot be reached, determine what additional information is needed to reach a consensus and evaluate the segment(s) again.*

- *Plant-specific expert panel guidance should be developed for this process or guidance from other risk-informed applications (e.g., Maintenance Rule) may be used as part of this process to ensure consistency across the risk-informed applications."*

(d) The WCAP needs to define more clearly the review of internal event recovery actions while developing surrogates (SPSB Open Item P3(2)).

Response:

Choosing a surrogate PSA component to represent the system effects of a pipe failure in a segment must include consideration of how the surrogate component is modeled in the PSA, including the modeling of recovery actions for the component. To emphasize this consideration when

choosing surrogate components, the following will be added in the first full paragraph on page 91 before the sentence beginning with "The conditional core damage ...":

> *"When choosing a surrogate component, care must be taken to account for the ways in which the component has been modeled in the PSA, including recovery actions which may have been modeled to restore the operability of the component. If the recovery action was determined to be inappropriate for the postulated consequence given a piping failure, the recovery action basic event should also be failed with a probability of 1.0."*

(e) The WCAP needs to define more clearly what analysis documentation should be kept in retrievable files (Surry spreadsheets still marked preliminary draft) (SPSB Open Item P3(3)).

Response:

Each major step of the risk-informed ISI process should be documented in retrievable files. A new Section 5.10 of the WCAP is added to emphasize the documentation required for the program.

"5.10 DOCUMENTATION

Each major step of the risk-informed ISI process should be documented for future use in retrievable files. Below is a list of information that may be included by an individual utility in their RI-ISI submittal to NRC. A list of information to be retained onsite for retrieval and potential NRC audit is also provided. The information to be retained is summarized in the previous sub-sections.

Proposed NRC Submittal Contents

- *Current Inspection Code*
- *List of changes to licensing basis (relief requests, FSAR, etc.)*
- *Process followed (compliance with WCAP, Code Case and note exceptions to methodology)*
- *Summary of results of each step of the process*
- *How meet RG principles*
- *RI-ISI Program Plan (summary of changes from current program~~)~~ such as shown in Table 4.4-2)*
- *Performance monitoring/feedback/corrective action program changes/commitments*
- *Future reporting to NRC*

Retrievable Onsite Documentation for Potential NRC Audit

- *Scope Definition*
- *Segment definition*
- *Failure probability assessment*
- *Consequence evaluation*
- *PSA Model Runs for program*
- *Risk evaluation*
- *Structural element/NDE selection*
- *Change in risk calculations*
- *PRA Quality review*
- *Continual assessment forms as program changes based on inspection results, etc.*
- *ASME Code required documentation (including inspection personnel qualification, inspection results and flaw evaluations)"*

9. It appears that the possibility of check valves failing to close and automatic isolation valves failing to close is not considered during the analysis. That is, proper operation of check and isolation valves is assumed when defining segment boundaries. The staff notes that the probability of such valves failing to close range from 1E-02/demand to less than 1E-03/demand. In general, the staff expects the difference in the conditional consequences on one side of a valve versus the other would not be so great that this assumption would have any impact on the results. Containment isolation valves should, however, be reviewed to ensure the assumption is appropriate. WOG should clarify what credit is being given for automatic closure of isolation valves and whether the probability of isolation failure would be considered in determining segment boundaries (INEEL Open Item 21, SPSB Open Item P4).

Response:

When defining the consequences for the segments, check valves are assumed to close. The bases for this assumption are given in WCAP-14572 Section 3.3 (page 57). For automatic isolation valves and containment isolation valves, the following will be added to Section 3.3 after the discussion on the check valves:

> *"Automatic isolation valves are assumed to close if the pipe failure in question would create a signal for the valves to close. Containment isolation valves should be carefully considered for segments which contain the containment penetrations. If the segment consequences are significantly different assuming an automatic and/or containment isolation valve failure, then the piping segment definition should be reviewed and if necessary, the piping segment should be further combined or subdivided*

- *such that the failure of the valve, under pipe failure conditions, would be considered in conjunction with the change in consequences."*

10. In Section 3.2 of the WCAP, in the Walkdown section, it is noted that for high energy piping that has the potential to whip following a postulated failure, it should be considered that a whipping pipe that has the potential to impact other piping will not rupture lines of equal or greater size, and that it should be assumed that a through-wall crack will develop in a line that is impacted by a whipping pipe of the same size. WOG should provide the basis for these assumptions (INEEL Open Item 22).

Response:

The basis for these assumptions is the following references:

> *American Nuclear Society, "Design Basis For Protection of Light Water Nuclear Power Plants Against the Effects of Postulated Pipe Rupture," ANSI/ANS-58.2-1988, 1988.*
>
> *Westinghouse Systems Standards Design Criteria (SSDC) 1.19, "Criteria For Protection Against Dynamic Effects Resulting From Pipe Rupture", Revision 1, 1980.*

SSDC 1.19 provides criteria based on pipe whip tests that were conducted by Westinghouse about 1970. These references will be added to the WCAP-14572, Revision 1 and cited appropriately on page 66.

11. Although it is stated in several places that the augmented programs are not included, the detailed results provided by Surry seem to include changes to the augmented programs. Furthermore, the augmented programs are credited in the pipe failure probability calculations. The degree to which the augmented programs are incorporated in the RI-ISI needs clarification (SPSB Open Item 23).

Response:

No changes to the augmented inspection programs are being made with the proposed change to the ASME Section XI ISI program (as stated on page 4 and 14). However, they are considered as part of the RI-ISI process. This is discussed in Section 3.5.5 of WCAP-14572 and Section 3.6 (such as pages 104 and 123).

As stated on page 104, for the risk ranking calculations, augmented programs (such as erosion-corrosion and stress corrosion cracking programs,) are credited when the augmented program is deemed adequate in finding piping degradation with respect to the failure mechanism. This was done at Surry by using the SRRA

failure probabilities with ISI but without leak detection to credit the augmented programs as reducing the failure probability for that specific failure mechanism. The augmented programs are also credited in the change in risk evaluation for both the ASME Section XI program and the proposed RI-ISI program.

12. WCAP should provide guidance for the analyst on the code limitations for complex geometries and guidance for effective use of the code in such applications (RES Open Item 28).

    The SRRA piping models only apply to standard piping geometry (circular cylinders with uniform wall thickness). A limitation on the use of non-standard geometry was also added to the response to Question 4 to address this concern.

13. WCAP should specify the level of training and qualification that the code user needs to properly execute the SRRA code (RES Open Item 29).

    Response:

    The following insert will be added after the response to question 15(b), which follows the first paragraph in Section 3.2 (page 16) of WCAP-14572, Rev. 1, Supplement 1.

    > *"To ensure that the simplified SRRA input parameters described above are consistently assigned and the SRRA computer code properly executed, the engineering team for SRRA input should be trained and qualified. The following topics should be covered in this training:*

    - *Overall risk-informed ISI process,*
    - *How SRRA calculated probabilities are used in the piping segment risk calculation,*
    - *Expertise and type of information required, including applicable sources (see Table 1-1),*
    - *How potential degradation mechanisms are considered and combined (see Table 1-2),*
    - *The importance of each input parameter on each degradation mechanism and failure mode,*
    - *Example SRRA program use for different degradation mechanisms and failure modes, and*
    - *How detailed SRRA input (e.g. uncertainties in Section 3.4) is developed and used."*

14. WOG should describe how proof testing is addressed in the SRRA calculations. If it is not addressed, clarify what impact does its neglect have on the calculated failure probabilities and categorization (RES Open Item 32).

Response:

The following insert will be added after the first paragraph in Section 3.3 (page 17) of WCAP-14572, Rev. 1, Supplement 1. The effect on the segment risk ranking and categorization would also be very small and only slightly conservative.

> *"It should also be noted that the SRRA models in LEAKPROF do not take credit for eliminating large flaws, which would fail during the pre-service hydrostatic proof test, even though this is allowed as an input option in pc-PRAISE. The SRRA model is only slightly conservative in this regard since the probability of having an initial flaw big enough to leak during the hydrostatic proof test would normally be very small."*

15. (a) The probability of detection curves used in calculations need to be justified for the material type, inspection method, component geometry, and degradation mechanism that apply to the structural location being addressed. In this regard, users of the SRRA code should seek additional NDE reliability data and insights beyond the information and limited number of examples provided by WCAP-14572, Revision 1, Supplement 1 (RES Open Item 33).

Response:

The following insert will be added to the end of the first paragraph in Section 3.3 (page 17) of WCAP-14572, Rev. 1, Supplement 1.

> *"Furthermore, the default input values for the probability of detection (POD) of ferritic and austenitic pipe are also consistent with the default input values for pc-PRAISE since the SRRA models were to be bench-marked with this software (see Section 4.3). However, the SRRA code user must ensure that the specified input values for POD are appropriate for the type of material, inspection method, component geometry and degradation mechanism being evaluated. Additional NDE reliability data and insights for POD determination are given in the references cited in Section 6.1 of the pc-PRAISE User's Manual (Harris, Dedhia and Lu 1992), Section 2.6.2 of Volume 1 (ASME 1991) and Section 2.7.3 of Volume 2, Part 1 (ASME 1992) of the Risk Based Inspection Guidelines."*

(b) With proper inputs, the code provides a useful tool to assist in estimating piping failure probabilities due to wall thinning. The main difficulty with

the methodology is the need for a consistent basis to assign input parameters, an area where the code documentation provides little guidance. There is a potential for different users of the code to estimate significantly different values for failure probabilities as a result of different judgements and interpretations associated with the high, medium and low categories of wall thinning. WOG should expand the code documentation to provide additional guidance for selecting the input for the calculation (RES Open Item 35).

Response:

The second-to-last sentence in the first paragraph in Section 3.2 (page 16) in WCAP-14572, Rev. 1, Supplement 1 will be deleted and the following insert will be added after this paragraph. Item 9 of the LEAKMENU input instructions in Section B of Appendix A will also be revised to be consistent with the following insert.

> *"The following items describe the simplified input variables in Tables 3-1 and 3-2 and any associated assumptions that could be important in assigning their input values. If more than one degradation mechanism is present in a given piping segment, then the limiting input values for each mechanism should be combined so that a limiting failure probability is calculated for risk ranking.*
>
> *a) The inservice inspection input is optional since it is used to evaluate the benefit of a proposed inspection program. See the second paragraph of Section 3.3 on specifying an appropriate accuracy (probability of detection). Note that the first inspection is assumed to be performed at 1/2 of the input interval. For a normal interval of 10 years, ISI would be assumed at the end of years 5, 15, 25 and 35.*
>
> *b) All piping material properties, except flow stress (approximate average of yield and tensile strengths), are assumed to be independent of temperature in the simplified SRRA input.*
>
> *c) LEAKMENU will automatically calculate the outside diameter (O.D.) and its uncertainty for the specified nominal pipe size (NPS). However, the actual pipe wall thickness to O.D. ratio must be used.*
>
> *d) The welding residual stress is much more important for stress corrosion cracking than for fatigue. The weld fabrication process, especially any post-weld heat treatment,*

should be considered in estimating its median value. The existing residual stress can also be reduced significantly due to mitigative actions, such as application of induction heating and mechanical stress improvement processes. Its value is always truncated at a minimum value of 0 and at a maximum value of 90% of the flow stress (approximate yield strength) during the piping simulations in the LEAKPROF program.

e) The initial flaw conditions normally refers to whether radiographic (X-Ray, NDE) was performed on the pipe weld, since this affects the flaw density (probability of initial flaw existing). One flaw should be specified when the flaw is assumed to be initiated by high-cycle secondary stresses (e.g. thermal striping) or by stress corrosion cracking. The initial flaw size and its uncertainty are automatically calculated for typical welds using results from PRODIGAL (Chapman 1993) as described in Section 2.1.

f) The normal steady-state operating stress is the sum of the stresses due to operating pressure and deadweight and restraint of thermal expansion (DW & Thermal). All stresses that are specified as a ratio to the flow stress are assumed to be upper bound values from a conservative stress analysis. The uncertainty on these stresses assumes that the input median value is only one-half the upper bound value. based on experience in performing stress analyses for nuclear plant piping systems.

If all the following conditions exist,

- *DW stresses are calculated using distributed values instead of point loading*
- *actual support stiffnesses are used instead of assuming perfectly rigid (zero deformation) supports,*
- *actual operating conditions are used for calculation instead of design conditions*
- *the DW and thermal stresses are calculated without any ASME Section III stress concentration factors for peak stresses, which are important for fatigue crack initiation but not for crack growth*

Then, higher median values and lower uncertainty can be justified and used via the detailed input option.

g) *The maximum stress corrosion cracking (SCC) potential of 1.0 is for fully sensitized SS in a BWR primary water environment. For the same potential, the SCC rates per K^2 for 304 SS, 316 SS and carbon steel are 3.59E-8, 3.24E-9, and 3.59E-11 inch/hour, respectively, where K is the stress intensity factor for pressure, DW & Thermal and residual stresses.*

h) *The maximum material wastage potential of 1.0 is for an industry average flow assisted corrosion rate of 9.5 mills per year. For example, if the plant's existing FAC control program indicated a 6-inch (NPS) schedule 40 carbon steel pipe (0.28" wall) would~~is assumed to~~ fully waste away in 120 years, then the average rate is 2.3 mills per year and the associated potential is approximately 0.25. For the same potential, the material wastage rates for 304 and 316 SS are assumed to be only 0.1% of that for carbon steel. When material wastage rates are high enough to proceed through the pipe wall, the probabilities of small leak, large leak and break are all calculated to be the same.*

For wastage due to flow assisted corrosion, the FAC module in the CHECWORKS Program System, which was developed for EPRI (Chexal, et al. 1998), can be used, with or without data from the plant's existing FAC control program, to estimate the average wastage rate and corresponding potential. However, if mitigative actions have been taken, such as replacement with a corrosion resistant material, then not taking any credit for it could be grossly conservative. For example, with a wastage potential of 1.0 with no credit taken, assuming the mitigation action is 90% effective should result in a wastage potential of only 0.1 (or 0.01 for 99% effective) with significantly lower and more realistic SRRA calculated failure probabilities.

i) *The high-cycle fatigue stresses due to mechanical vibration are specified for a small pipe size of 1 inch and corrected for the input pipe size. The logarithm of the correction factor varies linearly with pipe size from a factor of 1 at 1 inch to a factor of 1/6 at 10 inches. A factor of 1/6 is used for all pipe sizes above 10 inches. Failure occurs when the stress-intensity factor range (dK) exceeds the fatigue crack growth threshold at an R value (Kmin/Kmax) of 0.9.*

j) *Cyclic fatigue loading includes that due to thermal transients, like normal heat up and cool down or stratification, and that due to periodic seismic loading (e.g. OBE). Typically, the higher the degree of piping restraint, the higher the thermal stress range and the lower the seismic stress range. Both the vibratory and cyclic fatigue stress values should be input as a stress range, which is twice the stress amplitude that is sometimes calculated in the stress analysis. Therefore, the input median stress range would equal the calculated upper bound stress amplitude if the stress report loading were controlling.*

k) *The crack growth rate for cyclic fatigue loading is based upon an R value (see item i) of 0 for stainless steel and from 0 to 0.25 for carbon steel. If R values significantly different than this are known to exist, then correction of the input stress range is required. For stainless steel, an equivalent stress range can be calculated by simply dividing the value of the stress range by the square root of (1 - R).*

l) *The design limiting stress is typically provided for the event that would most likely challenge the structural integrity of the piping, such as an SSE, LOCA, or water hammer. It should be provided to check if full break is more limiting than the large system disabling leak. If the system disabling leak rate is set to 0 (none), only the full break probability is calculated. If the break probability turns out to be limiting, then the probability of the design limiting event occurring should also be factored into the failure probability value used for piping segment risk ranking.*

m) *If the minimum detectable leak rate is set to 0 (none), no credit is taken for leak before break or for small leak before large leak. Note that the design-limiting stress and the disabling and detectable leak rates are not used to calculate small leak (through-wall crack) probabilities.*

n) *If snubbers are included in the piping system, then the effects of the snubbers not working properly should also be considered. This could result in an increase in slow cycle fatigue loading (item j) if the snubbers lock up during normal thermal cycling or an increase in seismic loading (item l) if the snubbers do not lock up during unexpected rapid motion. In either of these cases, the SRRA calculated probability would have to be multiplied by the probability*

that the snubbers do not operate properly (e.g. 0.1 for 10%). The larger failure probabilities for either proper or improper snubber operation would then be used for segment risk ranking."

16. Supplement one to the WCAP references an outdated assumption of limiting failure probabilities to 1E-08 if the code calculates lower numbers. That is no longer the method and the document should reflect the final methodology (RES Open Item 36).

Response:

The last sentence in the first paragraph in Section 4.3 (page 41) of WCAP-14572, Rev. 1, Supplement 1, will be deleted.

17. WCAP needs to provide justification for the guidance provided for location of circumferential and longitudinal breaks in high energy piping runs (RES Open Item 38).

Response:

The basis for the guidance given on page 65 of WCAP-14572, Revision 1 is provided in the following references:

> *American Nuclear Society, "Design Basis For Protection of Light Water Nuclear Power Plants Against the Effects of Postulated Pipe Rupture," ANSI/ANS-58.2-1988, 1988.*
>
> *U.S. Nuclear Regulatory Commission, Branch Technical Position MEB 3-1, " Postulated Rupture Locations in Fluid System Piping Inside and Outside Containment," Revision 2, June 1987.*
>
> *Westinghouse Systems Standards Design Criteria (SSDC) 1.19, "Criteria For Protection Against Dynamic Effects Resulting From Pipe Rupture", Revision 1, 1980.*

Piping failures are assumed to occur at any point along the high energy piping runs consistent with the guidance that is presented and these points are not limited to those that just may have a high stress value or high cumulative usage factor. The above references will be added to the WCAP-14572, Revision 1 and cited appropriately on page 66, consistent with the response to question 10.

18. For the standby systems, the equations in the WCAP do not incorporate the contribution of exposure time (allowed outage times). The staff finds the arguments acceptable that if the AOT does not significantly contribute to the

calculated CDF/LERF or system unavailability, then the contribution from AOT need not be calculated. However, the WCAP should provide a checklist to ensure that such contributions are negligible when development the analytic model (RES Open Item 41).

Response:

To address the possibility that an AOT contribution may be significant with respect to system/train unavailability for standby systems, the following will be added following the last bullet to the first full paragraph on page 100:

> *"However, for systems in which the AOT is on the order of magnitude of the test interval (T_I) such that the AOT is approximately (½ T_I)/2, or ¼ T_I, the contribution of unavailability expressed as (FR_{PB}) AOT should be added to right side of equation 3-8.*

19. The staff considers that the sensitivity study where the pipe failure probabilities are assigned range factors provides valuable insights and should be made part of the methodology to be used by each licensee. WOG needs to confirm that the sensitivity calculations would be part of the WCAP methodology to ensure that the medium safety significance range is appropriately selected, e.g., that no low safety significant segments migrate to high safety significance when reasonable variations in the pipe failure probabilities are considered (RES Open Item 45, SPSB Open Item P2).

Response:

The sensitivity study described above will be part of the WCAP methodology.

The following statement will be added to the Uncertainty analysis description contained on WCAP page 123 and replace the first sentence of this section.

"In addition to the sensitivity studies described above, a simplified uncertainty analysis is performed to ensure that no low safety significant segments could move into the high safety significance when reasonable variations in the pipe failure and conditional CDF/LERF probabilities are considered. The results of this evaluation along with other insights are provided to the plant expert panel."

20. The WCAP states that implementation of an RI-ISI program for piping should be initiated at the start of a plant's 10-year inservice inspection interval consistent with the requirements of the ASME Code Section XI, Edition and Addenda committed to by an Owner in accordance with 10 CFR 50.55a. However, it is not clear if it is the intent of this section to provide the staff periodic update on the RI-ISI program. The staff requires a 10-year update/status report be provided for staff information. This enables the staff to monitor program effectiveness and

industry experience. This section of WCAP should be modified to provide such guidance (RES Open Item 46).

Response:

The WCAP is being submitted as a proposed alternative request under 10CFR50.55a(3)(i) to be used in lieu of the requirements associated with the ISI program for piping provided in 10CFR50.55a(g). In this regard the 10-year ISI program submittal that is required under Section XI, IWA-1400(c) by reference only under 10CFR50.55a(g)(4) through 10CFR50.55a(g)(5)(i) is no longer a requirement and the words provided in the WCAP take precedence as requirements and guidance in this area.

Section 4.5 of the WCAP provides the alternative program requirements for a RI-ISI program that replaces those currently in the regulations under 10CFR50.55a(g). Section 4.5.1 first states a requirement that the RI-ISI program for piping be consistent with the current Edition and Addenda of Section XI that the Owner has committed to in accordance with 10CFR50.55a. This will actually be the Edition and Addenda of Section XI currently being used for a plant's existing ISI program if the plant chooses to implement their RI-ISI program in the middle of their current 10-year inspection interval or combines it with a 10-year update using a later NRC approved Edition and Addenda of Section XI. This Section XI Code reference only applies to that portion of the ISI program that will become Risk-Informed and meets the intent of the Section XI Code reference that is required for the implementation of ASME Code Case N-577. Once this Section XI Code reference is used it becomes the choice of the Owner whether to change that reference in the future.

Section 4.5.1 states that the Owner should submit the initial RI-ISI program (applies to the initial 10-year RI-ISI program for piping covered by the criteria in the WCAP) for NRC staff approval, but subsequent 10-year programs should not be submitted. This is a living program and the WCAP provides reporting requirements on a periodic basis in Section 4.5.2.

The following sentence will be deleted from Section 4.5.1. "Initial RI-ISI programs should be submitted for NRC staff approval, but subsequent 10-year programs should not." The following sentence will be added after the sentence "Documentation of program updates shall be kept and maintained by the Owner on site for audit.": "Changes arising from the program updates should be evaluated using the change mechanisms described in existing applicable regulations (e.g., 10CFR50.55a, 10CFR50.59, and 10CFR50 Appendix B) to determine if the change to the RI-ISI program should be reported to the NRC.

Section 4.5.2 outlines minimum periodic reporting requirements that would exceed a 10-year update/status report by at least three times and are more conducive to monitoring a RI-ISI program for piping (a living program). If changes are made to the Code Edition or Addenda of Section XI used in a RI-ISI program they would be identified on the FORM OAR-1 or a currently used FORM NIS-1 and based on the current words in Section 4.5.1. These words require that the Edition and Addenda of Section XI used in a RI-ISI program meet the requirements of 10CFR50.55a. ~~The WOG believes that sufficient guidance and reporting requirements to the NRC Staff are provided in Section 4.5 and no change to the WCAP is warranted for this open item.~~ The following sentence will be added to the paragraph that ends on the top of page 219: "Changes should be evaluated to determine if the change should be reported to the NRC."

21. WCAP needs to clarify as to why it's appropriate to reduce the segment failure potential by factor of three on page 206 (SPSB Open Item P5).

Response:

The factor of three improvement in the failure probability is credited when, for a given piping segment, at least two separate inspections are being performed. One inspection is performed for the primary failure mechanism which is addressed by an augmented program and a second inspection or inspections is/are performed so that the secondary mechanism is addressed by either the Current Section XI program or the risk-informed ISI program. The factor of three improvement was necessary since the SRRA results with ISI were already used in the base calculations if the piping segment was in an augmented program.

An additional bullet will be added following the ~~The~~ bullet on page 206 ~~will be revised to~~ which states:

"For selected piping segments that are in both the current Section XI ~~or RI-ISI program~~ program AND an augmented program in which the Section XI ~~or RI-ISI~~ proposes that additional or more stringent examinations beyond the augmented program are performed, a factor of three improvement in the failure probability is credited~~.~~"

Additional Notes Relating to Other WCAP Changes

- It is also suggested that the WCAP be updated to reference the draft for trial use NRC regulatory guide and SRP for RI-ISI and RG-1.174 for the overall principles.

1) Affects Section 1.1 (suggest removal of CLB definition in order to be consistent with latest RGs.
2) Affects Section 1.4 (minor changes due to changes in RGs wording)
3) Affects section 2.4 (minor changes anticipated)
4) Affects section 3 and 3.2 (allowance of partial scope)

   "A full scope program is recommended because a greater portion of the plant risk from piping pressure boundary failures is addressed in the risk-informed ISI program versus current ASME Section XI requirements since the examinations are now placed in several high-safety-significant piping segments that are not currently examined by the current Section XI approach. However, a partial scope evaluation may be performed given that the evaluation includes ~~all piping within a system or category,~~ a subset of piping classes, for example, ASME Class 1 piping only, including piping exempt from the current requirements."
5) Affects Section 6 (minimally)

- Reference for Jet impingement
  Mendler, O.J., "Method of Analysis and Evaluation of Jet Impingement Loads From Postulated Pipe Breaks," WCAP-8951, Revision 0.

- ~~Item from Surry telecon on selecting locations without Perdue model~~ The following changes are required to the WOG Topical Report as a result of an open item from the Surry-1 RI-ISI application that was discussed in a telecon between NRC, Virginia Power, Westinghouse and their contractors on Wednesday, September 16, 1998 related to selecting locations for examinations without exercising the Perdue model:

  (1) Section 3.7.2 will be modified to specifically call out the limitations of the statistical model and where additional guidance can be found in the Topical Report in how to determine inspection locations in the absence of such a model.

  A new subsection will be added at the end of Section 3.7.2 currently ending at the bottom of page 172 and will be titled *"Limitations of the Statistical Model."* The material previously contained in the last paragraph at the bottom of page 170, the three bullets at the top of page 171, and the sentence that follows the bullets will be moved into this new section with the following changes -

The first sentence of the first paragraph will now read - "*Some limitations have been identified in the statistical model that is used in determining the minimum number of locations to be examined. These limitations have emerged...*"

The following sentence will be added after the sentence which follows the three bullets - "*...and industry best practices. Some general guidance for the above situation is provided at the end of Section 3.7.3, and specific examples from the Surry-1 application are provided in Section 3.7.5 for further clarification.*"

(2) In Section 3.7.3, the following information is inserted following the sentence in the middle of page 178 that begins - "*Table 3.7.4 provides...susceptible areas of piping. For piping segments that have the potential for any of these conditions to occur, the selection of an appropriate number of actual inspection locations will have to be determined using additional rationale beyond the guidance provided above.*

- *For piping segments subjected to aggressive degradation mechanisms, such as flow-assisted corrosion, that are already addressed in an augmented inspection program, it is recommended that a determination of any potential secondary degradation mechanisms (e.g., thermal fatigue) be made. If it is determined that a secondary mechanism may be of concern, then the examination of at least one location in the segment may be warranted and included in the RI-ISI program. This additional examination(s) beyond the current augmented program should also be considered if the delta risk of RI-ISI versus ASME Section XI ISI is enhanced.*
- *For piping that is highly reliable, but the materials or prior corrective actions negate the applicability of a statistical evaluation, a minimum of one examination location per segment should be performed.*
- *A segment that is entirely comprised of socket welds and subject to vibration may be appropriately examined using a VT-2 exam that inspects the entire segment for leakage at pressure. Therefore, a minimum number of specific examination locations is not required.*

Other situations may exist that warrant considerations beyond the above guidance. However, the engineering subpanel who is selecting the actual inspection locations is always responsible for defending and documenting their rationale for this effort."

(3) In Section 3.7.5, the following information is to be inserted at the end of the second bullet on page 183 and should read - "*Additional rationale must be*

developed when a statistical model cannot be applied to determine the minimum number of examination locations for a given segment."

Insert the following sentence after the fourth bullet as the start of a new paragraph - *"Several examples are provided below where additional rationale had to be applied when a statistical model could not be exercised and when the NDE methods required departure from the guidance in Table 4.1-1."*

Delete the words *"For example,"* from the middle of the page.

The following material is inserted prior to the last paragraph on page 183 -

Segments CH-008, 009, and 0010 - These three segments, part of the charging system, are small bore, socket welded piping segments which supply seal injection water to the reactor coolant pump seals. The predicted failure mechanism is high cycle fatigue due to pump vibration. The examination technique required by Table 4.1-1 (R1.12) is a VT-2 exam at each refueling outage. Since the VT-2 exam involves inspection of the whole segment for leakage at pressure, tabulation of the exact number of welds per segment and application of the Perdue Model was not deemed necessary. This would be the case for any segment where VT-2 is the appropriate inspection technique. Additional NDE is also directed to this segment by the engineering subpanel that is over and above the guidance in Table 4.1-1.

Segments SW-044, 045, 046, 047, and 054 – These service water segments are fabricated of copper/nickel material which is not a material which can be modeled by the SRRA code and statistical model used for Surry Unit 1. They conduct service water to and from the charging pump intermediate seal coolers. The segments were originally rated of low safety significance but were moved up to high by the Expert Panel because of its sensitivity to the possibility of indirect effects. Because the piping is considered highly reliable, the postulated failure mechanism is thermal fatigue by default (actually thermal cycles are practically nonexistent), and the SRRA code could not be used to calculate a failure probability, which is a necessary input to the Perdue Model, the Perdue Model was not used to select examination locations. The subpanel believed that an examination location per segment would be representative of the balance of these highly reliable, low safety significant segments.

Change the words in the beginning of the last paragraph on page 183 to be changed from *"In another example,"* to *"Finally,"*

- Partial Exams

The following will be added to the WCAP on page 186 (into section 4.0) before section 4.1

"Examinations Requirements

An attempt should be made to provide a minimum of > 90% coverage criteria (per Code Case N-460) when performing an exam. Volumetrically this is done using ultrasonic (UT) techniques with the >90% requirement being met in all Code required directions (averaged). The examination is considered complete if the >90% coverage is obtained using the specified technique in the plan or combinations of techniques if limitations are encountered. Some limitations will not be known until the examination is performed, since some locations will be examined for the first time by the specified techniques.

When an examination location is selected that does not meet >90% examination coverage, a strategy should to be applied with regard to examination coverage as follows:

1. If >90% coverage is not obtained, the coverage obtained should be documented as well as the reason for the coverage limitation. If the coverage is limited by an obstruction, which is removable, then an evaluation should be performed to either allow removal of the obstruction or justify why the obstruction cannot be removed.
2. If the obstruction is required to remain, then consideration should be given to the structural elements on either side of the selected structural element, which is limited. If either of these structural elements can be examined to the coverage requirements, then an examination should be performed there in addition to the limited coverage exam already performed. This may be the only examination performed in situations where the selected element was selected for statistical sampling alone. Selecting another location would meet the statistical requirements for the segment, and the original site does not need to be examined. Additionally, the substitution (statistical) would not necessarily be limited to the elements on either side of the element originally selected.
3. If the area or volume of concern still remains insufficiently addressed, consideration should be given to leakage monitoring options such as more frequent pressure testing and VT-2 examinations or operator walkdowns.
4. The coverage obtained, limitations encountered, alternative provisions, and an assessment of how the risk is being addressed should be documented. The information should be formally submitted as a relief request.

It should be noted though that if a current Section XI examination is a partial examination and it continues to be a partial examination in the RI-ISI process, the amount of risk addressed by examination remains the same for that location. If a new location is going to be examined by RI-ISI and it is a partial examination, but

it was not previously required to be examined by Section XI, then the new examination would still increase the amount of risk addressed by examination for that location. It is not necessarily true that because you reduce examination totals, that a complete examination must be performed at the RI-ISI selected locations to maintain risk neutrality or improvement in the program. The impact of locations being removed overall risk contribution should be assessed (i.e., usually the segment risk contribution is negligible) in an analysis. Additionally the sampling requirements necessary to maintain assurance of structural integrity should be accounted for in the analysis. These type evaluations should be included in how the risk is being addressed in a partial examination situation."

OG-98-110

November 3, 1998

Project Number 694

Mr. Peter C. Wen
Project Manager,
Generic Issues and Environmental Projects Branch
Nuclear Regulatory Commission
Washington, DC 20555-0001

Subject: **Westinghouse Owners Group**
Transmittal of Further Proposed Revisions to WOG RI-ISI Program Reports: WCAP-14572, Revision 1 [Non-Proprietary] "WOG Application of Risk-Informed Methods to Piping Inservice Inspection Topical Report and WCAP-14572, Revision 1, Supplement 1 [[Non-Proprietary] "Westinghouse Structural Reliability and Risk Assessment (SRRA) Model for Piping Risk-Informed Inservice Inspection" (MUHP-5091)

Reference: 1) NEI Letter from Mr. Anthony R. Pietrangelo Nuclear Energy Institute, to Dr. Brian Sheron of NRC Subject: Transmittal of Reports WCAP-14572, Rev. 1 NP & WCAP-14572, Rev. 1 Supplement 1 NP, dated October 10, 1997

2) Westinghouse Owners Group Letter from Louis F. Liberatori, Jr., to Peter C. Wen, U.S. Nuclear Regulatory Commission, "Transmittal of Responses to NRC Open Items on WOG RI-ISI Program and Reports: WCAP-14572, Revision 1 [Non-Proprietary] *WOG Application of Risk-Informed Methods to Piping Inservice Inspection Topical Report* and WCAP-14572, Revision 1, Supplement 1 [[Non-Proprietary] *Westinghouse Structural Reliability and Risk Assessment (SRRA) Model for Piping Risk-Informed Inservice Inspection* (MUHP-5091)" dated September 30, 1998

Dear Mr. Wen;

Members of the U.S. Nuclear Regulatory Commission (NRC) Staff and the Westinghouse Owners Group (WOG) met with the Advisory Committee on Reactor Safeguards (ACRS) Subcommittee on Reliability and Probabilistic Risk Assessment on October 29, 1998 regarding the NRC Safety Evaluation Report (SER) on the WOG Topical Report (WCAP-14572, Revision 1) on risk-informed inservice inspection (ISI) of piping. As a result of comments provided during this meeting by the ACRS on the subject report, the WOG plans to further revise WCAP-14572, Revision 1, including its Supplement 1, as outlined in the enclosure to this letter.

The latest version of the WOG Topical Report for risk-informed ISI of piping was provided to the NRC in Reference 1. The WOG recently outlined some proposed revisions to the Topical Report as part of our response to open items identified from NRC Staff review of the document per Reference 2. The enclosed information augments these prior revisions as a result of the recent ACRS subcommittee review and discussion. It should be noted that the enclosed proposed revisions to the subject WOG Topical Report

OG98110.doc

may be further amended based on the results of upcoming discussions between the Full ACRS and NRC Staff scheduled for this Thursday, November 5, 1998.

This information is being provided at this time to facilitate the discussions with the Full ACRS and to assist the NRC Staff in maintaining the schedule for review and approval of this important industry report. We still look forward to receiving the NRC safety evaluation report (SER) by December 1998.

Our responses provided in Reference 2 and the enclosed proposed revisions should also be considered as a commitment by the WOG to include the information cited in these transmittals into the WOG Topical Reports. In addition, the NRC's SER when received will be included into an NRC-approved (A version) of the Topical Reports verbatim inside the front cover.

Please direct any questions or comments on this letter or the attachment to Mr. Ken Balkey, Westinghouse, at (412) 374-4633 or Ms. Nancy Closky, Westinghouse, at (412) 374-5916.

Very truly yours,

Lawrence A. Walsh

Lawrence A. Walsh, Vice Chairman
Westinghouse Owners Group

cc: Dr. Brian Sheron, NRC
Mr. Gary Holahan, NRC
Dr. Goutam Bagchi, NRC
Dr. Syed Ali, NRC
Mr. Ashok Thadani, NRC
Mr. Gus Lainas, NRC
Mr. Michael Markley, ACRS Staff
Mr. Ralph Beedle, NEI
Mr. Anthony Pietrangelo, NEI
Mr. Biff Bradley, NEI
Mr. Alex Marion, NEI
Mr. Ernie Throckmorton, VP
WOG Steering Committee
WOG Materials Subcommittee
WOG Risk-Based Technology Working Group
M.M. DeWitt - ECE 5-36
N.J. Liparulo - ECE 4-15
A.P. Drake - ECE 5-16
S.D. Rupprecht - ECE 4-15
H.A. Sepp - ECE 4-07A

OG98110.doc

Response to ACRS Questions
Related to WOG Application of Risk-Informed Methods to Piping Inservice Inspection
(WCAP-14572, Revision 1)

Three issues were raised at the ACRS PRA Subcommittee meeting on October 29, 1998. These included:

- Risk Calculation Equation
- SRRA Failure Probability Uncertainties
- Executive Summary Discussion

The proposed changes to the WOG WCAP-14572, Revision 1 and Supplement 1 are identified below. The proposed additions to the WCAP Topical Report are shown below in italics (for changes committed in the WOG September 30, 1998 letter) and in italics and Arial bold (for current proposed additions).

Risk Calculation Equation Issue

An issue was raised during the ACRS October 29, 1998 meeting regarding the mitigating system equation discussion including equation (3-8) on page 99 of WCAP-14572, Revision 1.

To further clarify the mitigating system equation on page 97, the following changes are suggested:

"For piping failures that cause only mitigating system(s) degradation or loss, the core damage frequency for the piping segment is determined by the following equation:

$$CDF_{PB} = FP_{PB} * \Delta CDF_{PB} \qquad (3\text{-}4)$$

where:

CDF_{PB} = Core Damage Frequency from a piping failure (in events/year)
ΔCDF_{PB} = Change in CDF between segment failed and segment not failed (in events/year)
FP_{PB} = Pipe break failure probability (dimensionless)

To obtain the ***change in*** CDF, a surrogate component (basic event or set of basic events, such as a pump or valve) that is already modeled in the plant PSA is identified in which the consequences or impact on the CDF matches the postulated consequences for the piping failure. The surrogate component is assumed to fail with a failure probability of 1.0 to obtain a new total plant core damage frequency. In order to determine the ***change in*** core damage frequency for the piping segment only, the base total plant PSA CDF is subtracted from the new total plant CDF as shown by:

$$\Delta CDF_{PB} = CDF_{PB=1.0} - CDF_{BASE} \qquad (3\text{-}5)$$

where:

$CDF_{PB=1.0}$ = new total plant CDF with surrogate component = 1.0 (in events/year)
CDF_{BASE} = base total plant CDF (in events per year)

Additional changes will be made throughout the text of the report to revise the nomenclature to be consistent with those given above.

To support equation (3-8) shown in the WCAP, the relevant material from page 8-9 of NUREG/CR-4550, Volume 1, Revision 1, "Analysis of Core Damage Frequency: Internal Events Methodology", January 1990, was reviewed. The key wording from page 8-9 is repeated below.

"The selection of the appropriate equation is dependent on the nature of the data and the circumstances being modeled. Equations 8.1 and 8.2 can be used to model the same component failure mode; failure of standby component to switch to operational mode upon demand. The choice of equation 8.1 [demand related probability] or 8.2 [time related probability] depends on the analyst's belief as to whether the data better supports the development of demand related parameters or time related parameters...It should be noted that equation 8.2 should be used only if the faulted condition of a component which would result in failure on demand can be detected only when the component is demanded or tested."

As stated in the WCAP on page 99, the SRRA models both the time dependent and demand based failures within the same model. Therefore, there is not just one formula that would be accurate for all cases. Based on the discussion provided in the WCAP, the failure probability is assumed to be a time dependent element in equation 3-8.

"Standby Component Unavailabilities

Because of the way the SRRA models both the time dependent and demand based failures within the same SRRA model, there is not *just* one formula that would be accurate for all cases. From a mechanistic viewpoint, the probability of failure on demand depends on several factors:

- how the potential degradation mechanism progresses (whether time sensitive or load cycle sensitive)
- number of stress cycles seen in normal operation
- number of stress cycles seen in surveillance testing
- whether the mitigation demand presents a significant loading challenge to the piping
- whether there is a significant expectation of unidentified water hammer type loading and the probability of this event occurring during mitigation

The cumulative failure probability at end of life captures all of the contributing factors to the failure probability regardless of whether it is concentrated early or later in plant life. Therefore, the cumulative failure probability is used as a time dependent element in the standard PRA equation described below.

To estimate a structural pressure boundary failure probability for a standby component, the following equation is used:

$$FP_{PB} = \frac{1}{2}(FR_{PB})\,T_t + (FR_{PB})\,T_m \qquad (3\text{-}8)$$

where

FR_{PB} is the failure rate (in events per unit time)

T_t is the interval between tests that would identify a piping failure

T_m is the total defined mission time (24 hours for most PRAs)

This equation does not include any contribution for exposure time (allowable outage times (AOTs)) for several reasons:

1) operations will likely isolate the break, and the consequences may be different for this situation than for the situation in which the isolation does not occur (the consequences would be less severe in this state),
2) the plant will likely be shut down given a disabling leak,
3) the AOT time (generally 72 hours) will be small compared to the test interval for a majority of the segments,
4) given operator walkarounds occurring at least once per shift (every 8 hours), the exposure time would most likely be minimal, and
5) the contribution to CDF from the occurrence of an initiating event during an AOT is small compared to other contributors.

However, for systems in which the AOT is on the order of magnitude of the test interval (T_t) such that the AOT is approximately (½ T_t)/2, or ¼ T_t, the contribution of unavailability expressed as (FR_{PB}) AOT should be added to the right side of equation 3-8.

The piping failure may be detected by different types of tests and this should be taken into consideration when identifying the interval between tests. For example, some piping failures will be detected by monthly or quarterly pump surveillance tests; others will be detected only by full flow system tests occurring during refueling and still others will be detected only by a system pressure test which occurs every 10 years. As noted above for continuously operating systems, if the pipe is continuously under static pressure or is attached to storage tanks such that the failure is immediately recognized, then the continuously operating equation should be used.

For example, for a Surry auxiliary feedwater system piping segment (from motor driven pump P-3A to CV157), the failure probability from the SRRA code is determined to be 1.04E-02 and the corresponding test interval was identified to be quarterly (piping is assumed to be tested when the pump is tested). Using the above formula (3-8), the failure probability is:

$$\begin{aligned} FP_{PB} &= \tfrac{1}{2}(FR_{PB})\,T_t + (FR_{PB})\,T_m \\ &= [\tfrac{1}{2}(1.04E\text{-}02/40\ \text{years}) * (0.25\ \text{years})] \\ &\quad + [(1.04E\text{-}02/40\ \text{years}) * (1\ \text{year}/365\ \text{days}) * 1\ \text{day}] \\ &= 3.32E\text{-}05 \end{aligned}$$

As another example, for a Surry auxiliary feedwater piping segment ***(from MOVs 160A and 160B to check valves 309 and 310, from the opposite unit auxiliary feedwater system)***, the failure probability from the SRRA code is determined to be 3.58E-04 and the corresponding test interval ***was identified to be*** 10 years ***(segment is isolated and only tested every 10 years)***. Using the above formula (3-8), the failure probability is:

$$
\begin{aligned}
FP_{PB} &= \tfrac{1}{2}(FR_{PB})\,T_t + (FR_{PB})\,T_m \\
&= [\tfrac{1}{2}(3.58E\text{-}04/40 \text{ years}) * (10 \text{ years})] \\
&\quad + [(3.58E\text{-}04/40 \text{ years}) * (1 \text{ year}/365 \text{ days}) * 1 \text{ day}] \\
&= 4.48E\text{-}05
\end{aligned}
$$

The ***change in*** CDF is calculated by subtracting the base PSA CDF from the actual PSA run (3.15E-04) and the result is 3.15E-04/year - 7.23E-05/year = 2.43E-04/year. For the AFW piping segment described above ***(from opposite unit AFW system)***, the core damage frequency from the piping failure is calculated by:

$$
\begin{aligned}
CDF_{PB} &= FP_{PB} * \Delta CDF_{PB} \\
&= 4.48E\text{-}05 * 2.43E\text{-}04/\text{year} \\
&= 1.09E\text{-}08/\text{year}"
\end{aligned}
$$

<u>SRRA Failure Probability Uncertainties</u>

The following illustrates the changes to the uncertainty section on page 127 of WCAP-14572, Revision 1:

<u>"Uncertainty Analysis</u>

It is recognized that some amount of uncertainty may exist in the projections of PSA and SRRA failure probabilities. In order to address this uncertainty a distribution was developed around each of these "point estimates" such that the median of the log-normal distribution is equal to the point estimate. The "spread" of the distribution about the median is determined by the standard deviation.

The standard deviation of the related normal distribution is calculated as follows:

$$\sigma = \frac{\ln(\chi_{.95}) - \log(\chi_{.50})}{\text{NORMSINV}(.95)}$$

where:

$\chi_{.95}$ = factor above the mean which represents the 95%-tile of the log-normal distribution. Factors of 5, 10 and 20 were used for this analysis. The factor used was determined by the value of the point estimate. If the point estimate was less than 1E-04, a factor of 20 was used. If the point estimate was greater than or equal to 1E-02, a factor of 5 was used. Otherwise, a factor of 10 was used. ***This is consistent with the decreasing uncertainty in SRRA calculated probability with increasing median value that is discussed in Section 4.4 of Supplement 1 and also consistent with previous PRA uncertainty evaluations.***

$\chi_{.50}$ =median of the log-normal distribution. A median value of 1 was used.

NORMSINV = the inverse of the standard normal cumulative distribution (mean 0.0, standard deviation 1.0) given a probability."

The following change is suggested for Section 5.5 Risk Evaluation (Last bullet on page 234):

- "Evaluate ***important*** PSA ***and failure probability*** factors through sensitivity ***and uncertainty*** studies, ***as appropriate***"

The last paragraph on page 42 of WCAP-14572, Revision 1, Supplement 1, will be revised with the following:

"A sensitivity study using pc-PRAISE (Harris, Dedhia and Lu 1992) on the effect of uncertainties was recently completed by ASME Research Task Force member Fred Simonen and Moe Khaleel of Battelle Pacific Northwest Laboratory. Figure 4-5, taken from this study (Khaleel and Simonen 1998), shows ***that the 99% uncertainty bounds*** on a typical pc-PRAISE (Harris, Dedhia and Lu 1992) calculation of leak probability ***decreases as the value of leak probability increases. These uncertainty bounds*** should be higher than the corresponding uncertainty bounds on a typical leak probability calculated with the revised SRRA software. This is because many of the uncertainties not directly evaluated bypc-PRAISE, such as that on cyclic stress range, are already included in the standard SRRA software input (see Table 3-8)."

Figure 4-5 on page 52 of WCAP-14572, Revision 1, Supplement 1, will be replaced with that on the following page.

The following reference will be added in Section 6, References, page 55:

Khaleel, M.A. and Simonen, F.A., "Uncertainty Analysis of Probabilistic Fracture Mechanics Calculations of Piping Failure Probabilities," pp. 2040-2045, Probabilistic Safety Assessment and Management, Volume 3, September 1998.

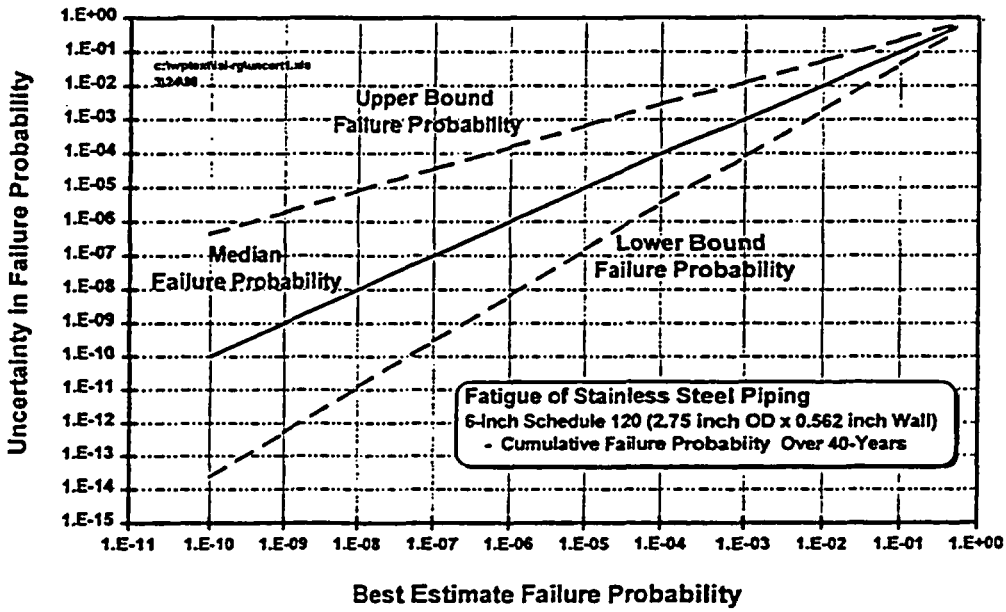

Figure 4-5 *Uncertainties in* Leak Probabilities for Stainless Steel Fatigue Calculated by PC-PRAISE (Khaleel and Simonen 1998)

Executive Summary Discussion

The following changes to the executive summary are suggested beginning at the top of page iii of the report.

"The focus of this report is on the identification of the inspection locations using a RI-ISI process. ***The goal of this application is to provide a process for selecting inspection locations based on a combination of safety significance and failure potential in support of an inspection for cause philosophy. A 2x2 matrix of piping failure importance versus safety significance is used to properly categorize the various piping segments (see Figure 3.7-1) to assist in the selection of piping structural elements for examination.***

The ***WOG*** risk-informed ISI process ***(as shown in Figure 3.1-2) that is applied to identify the locations for examination*** includes the following steps:

- Scope Definition
- Segment Definition
- Consequence Evaluation
- Failure Probability Estimation
- ISI Segment Selection
- Structural Element Selection
- Inspection Requirements

Section 3 of the report describes the details of this methodology, and Section 5 outlines the steps of how to apply the risk-informed ISI process to a specific plant for piping. The WOG risk-informed ISI process meets the key steps and principles of the NRC framework that has just been established for risk-informed, plant-specific decision-making. The risk-informed inspection program requirements can be implemented and monitored within the framework of the ASME Boiler and Pressure Vessel Code Section XI.

An earlier version of the above process....."

UNITED STATES
NUCLEAR REGULATORY COMMISSION
ADVISORY COMMITTEE ON REACTOR SAFEGUARDS
WASHINGTON, D. C. 20555

November 20, 1998

Dr. William D. Travers
Executive Director for Operations
U.S. Nuclear Regulatory Commission
Washington, D.C. 20555-0001

Dear Dr. Travers:

SUBJECT: SAFETY EVALUATION REPORT RELATED TO WESTINGHOUSE OWNERS GROUP APPLICATION OF RISK-INFORMED METHODS TO INSERVICE INSPECTION OF PIPING, TOPICAL REPORT (WCAP-14572, REVISION 1)

During the 457th meeting of the Advisory Committee on Reactor Safeguards, November 4-7, 1998, we met with representatives of the NRC staff and the Westinghouse Owners Group (WOG) to discuss the staff's draft Safety Evaluation Report (SER) on the topical report (WCAP-14572, Revision 1) regarding the WOG application of risk-informed methods to inservice inspection (ISI) of piping and associated Structural Reliability and Risk Assessment (SRRA) model (Supplement 1). Our Subcommittees on Reliability and Probabilistic Risk Assessment and on Regulatory Policies and Practices met on October 29, 1998, to discuss these documents and related matters. We also had the benefit of the documents referenced.

The reactor coolant system boundary (RCSB) is one of the primary barriers to fission product release and has been designed to be highly reliable. Piping constitutes a significant portion of the RCSB. Because of its robust design and the protection afforded by other mitigation systems, piping failures generally make relatively small contributions to measures of risk such as core damage frequency (CDF). Assurance of the integrity of primary barriers such as the RCSB is, however, a cornerstone of defense-in-depth. Inservice inspection is used to ensure that failure modes such as flow-accelerated corrosion or unanticipated thermal fatigue that were not anticipated in the original design do not unduly compromise the integrity of this barrier.

Conclusions and Recommendations

1. We concur with the conclusion reached by the staff in the SER that the methodology described in WCAP-14572, Revision 1, can be used to develop risk-informed ISI programs that will provide an acceptable (and, we believe, superior) alternative to the requirements of paragraph (g) of 10 CFR 50.55(a) and that conform to guidance in Regulatory Guides 1.174 (General Guidance) and 1.178 (ISI).

2. The draft SER identifies changes that the staff believes need to be made in WCAP-14572. We recommend that the changes requested by the staff be incorporated into WCAP-14572. We note that WOG has already proposed revisions (Ref. 3) that are intended to address most of the issues in the draft SER. We believe that one of the changes proposed by WOG (Item 19, Ref. 5) should be modified, as discussed later in this letter. We also recommend that the modification regarding model uncertainty (Page 127 of WCAP-14572, Revision 1), proposed in Ref. 5, be omitted.

3. Although the codes used to derive probabilities of failure are useful tools, the values obtained are very sensitive to the decisions of the analyst who must identify and select the appropriate input parameters to the code and the likely failure mechanisms. We recommend that the information provided to the expert panel include a discussion of the significance of model uncertainties in code predictions and their potential impact on the classification of pipe segments.

4. Because risk-informed ISI can reduce the risk from piping failures, occupational radiation exposure to personnel, and associated inspection costs, we commend the staff and industry for their efforts in resolving differences in a timely manner.

Overall Methodology

WCAP-14572 documents a methodology that can be used to develop alternatives to the current ASME Code Section XI inspection program for piping. In the Code procedure, the piping is grouped into three broad Classes ranked in order of presumed risk significance. The probability of failure for the piping element is ranked in terms of the design stress levels and the cumulative usage factor. The inspection is focused completely on welds and the fraction of welds, to be inspected, and depends only on the Class to which the piping belongs. The WCAP-14572 methodology can be used to examine additional failure mechanisms and locations and can provide more informed estimates of risk significance, the relative probability of failure of piping segments, and the number of welds that must be inspected to achieve an acceptable level of reliability.

In the WCAP analysis, piping segments are classified in terms of high- and low-failure potential ("importance" in the WCAP terminology), and high- and low-safety significance. In accordance with the guidance provided in Regulatory Guide 1.174 and Regulatory Guide 1.178, the quantitative results derived from the plant probabilistic risk assessment (PRA) and other analytical tools, together with input from other engineering analyses, operational experience, and an expert panel, are used in an integrated decisionmaking process to develop the inspection program. The unique features of the WCAP-14572 methodology are its approach to using an existing PRA to quantify risk significance of piping segments, the SRRA model, a probabilistic fracture mechanics tool for computing probabilities of failure, and the statistical model used to determine number of locations that must be inspected in order to meet the proposed performance measure, i.e., a low probability of leakage.

Use of Existing PRAs to Determine Safety Significance

Existing PRAs do not directly incorporate pipe segment failure events. In WCAP-14572, the WOG does not propose modification of the PRA to incorporate these events directly, but instead proposes that the impact on CDF and large, early release frequency (LERF) for a segment can be determined by the use of surrogate events, i.e., initiating events, basic events, or groups of events that are already modeled in the PRA and that have effects representative of those associated with the failure of the piping segment. Such an approach to the use of a PRA to gain insights on the potential significance of elements not directly included in the PRA could have broader applications beyond ISI.

The Risk Reduction Worth (RRW) of a piping segment, which measures the reduction in CDF when the segment is assumed never to fail, is used as a quantitative measure of safety significance. Because piping failure probabilities are low, if the total CDF for all plant internal events is used to compute RRW, none of the pressure boundary piping components would be safety-significant, i.e., all RRWs would be equal to 1. To prioritize piping segments, the RRW is instead computed using just the portion of the total CDF that is associated with piping boundary failures. We agree that this approach provides a more meaningful measure of the risk significance of a piping segment.

Any application using risk-insights derived from the PRA presumes a sufficient standard for PRA quality. Additional considerations are required when using measures such as RRW. For example, it is often assumed that if something cannot be modeled accurately, it is satisfactory to at least model it conservatively. Although this may be true for measures of overall risk such as CDF and LERF, undue conservatisms in some parts of the analysis can give completely misleading results in the case of measures such as RRW. Both the staff and WOG are aware of such potential difficulties, and until more accurate assessments of the quality of PRAs are available, the expert panel is expected to recognize misjudgments of significance.

Determination of Piping Failure Probabilities

The SRRA probabilistic fracture mechanics model used to estimate piping fracture probabilities has been benchmarked against the PRAISE code, developed by NRC. The SRRA model is intended to be simpler, more user friendly, and more computationally efficient than PRAISE. In a series of benchmark calculations, results of SRRA have compared well with those of PRAISE. The SRRA model also includes flow-accelerated corrosion, which is not included in PRAISE.

Neither SRRA nor PRAISE is meant to provide detailed mechanistic predictions of degradation phenomena, but used together with insights based on plant operating experience, they provide relative estimates of the susceptibility of the piping segment to failure. The relative ranking will be largely determined by the judgment of the analyst through selection of input parameters to the code. This selection reflects the analyst's knowledge of the phenomenon and operating experience. The SRRA code provides a quantification of this subjective understanding and converts the knowledge that an expert has (the relative aggressiveness of the stressors on a piping segment) into a quantity, the probability of failure, that otherwise would be difficult to determine.

Effect of Uncertainties

Uncertainties include those due to parameter uncertainties and those related to model uncertainty, i.e., the inability to correctly describe all degradation behavior and determine all parameters that affect degradation. The parameter uncertainties, such as the inherent randomness in material properties and flaw distributions, are relatively easy to model, but they are also the least significant source of uncertainty.

Although both the staff's SER and the Westinghouse reports focus on parameter uncertainties, the dominant role of model uncertainties is noted. Section 4.4 of Supplement 1 of WCAP-14572 states that model uncertainty "bounds all the other uncertainties, [and] is also the most difficult to predict."

The probability of piping failure for systems such as PWR primary coolant piping, where the only damage mechanism is mechanical fatigue due to loads anticipated in the design basis, is very low (leak probabilities are typically $<10^{-4}$ and break probabilities are about $<10^{-9}$ over the life of the plant). For systems with active degradation mechanisms, the probabilities of failure are much higher (3 to 4 orders of magnitude). Hence, despite the uncertainties associated with these calculated failure probabilities, the classification of the piping segments into those with high-failure potential and low-failure potential should be relatively robust because the analyst and the expert panel need only be able to distinguish those segments in which an active degradation mechanism is present and those in which it is not.

The impact of the uncertainties in the failure probabilities on the safety significance classification is more difficult to characterize. The WCAP attempts to address model uncertainty by examining the impact of variations in the pipe failure probabilities on the safety significance classification of the segments. In the SER, the staff has requested that such analyses be performed on a plant-specific basis to demonstrate that no segments of low-safety significance move into the high-safety significance category when reasonable variations in the pipe failure probabilities are considered. The results of these analyses would be provided to the expert panel. The staff concludes that such analyses would adequately address model uncertainty for the purpose of classifying the segments as either high or low safety significance. We believe that such an approach is adequate for this application. The WCAP (Item 19, Ref. 5) should be modified, however, to make clear that the robustness of the classification should be investigated over reasonable ranges of the input parameters describing the degradation modes (flow-accelerated corrosion, stress corrosion cracking, vibration fatigue, etc.), since these modes will be more scrutable for review by the expert panel than are the failure probabilities.

In its response (Ref. 4) to questions raised at the October 29, 1998 ACRS Subcommittee meeting, WOG proposes to address these uncertainties by assuming lognormal distributions with median values equal to the code estimates and the standard deviations estimated using judgment. We believe that there is no technical basis for the assumption that the code results may be used as median values. In fact, model uncertainty means that one does not know how good the code results are. Thus, it does not appear that this approach is helpful.

We believe that the issue of model uncertainty is very important and that its importance should be highlighted in both the WCAP report and the staff's SER and that it should be made clear to the expert panel so that the integrated decisionmaking process will be fully informed. What really

matters is that the final classification of the pipe segments be robust and that the focus of the panel's deliberations be the possible impact of model uncertainties on this classification.

Determination of the Number of Locations to be Inspected

All piping segments, including those classified as having low-failure potential and low-safety significance, will continue to be subject to the system pressure tests and visual inspections currently required by ASME Section XI. The WCAP commits its users to the volumetric inspection of 100 percent of the locations in piping segments of high-safety significance that are susceptible to degradation mechanisms, such as thermal fatigue. Segments with failure modes that have established augmented inspection programs, e.g., flow-accelerated corrosion or stress corrosion cracking, would be inspected in accordance with that program. Other locations in the segments of high-safety significance are selected for examination by a statistical evaluation method that uses the probability of a flaw, the conditional probability of a leak, the frequency of leaks considered acceptable (target leak rate), and a desired degree of confidence to determine a minimum number of welds to inspect. The proposed target leak frequencies vary with pipe size and range from 1×10^{-5} to 1×10^{-6}/year/weld. These values are slightly more conservative than operating system experience would suggest has been achieved when ASME Section XI criteria have been used. The pipe break frequency, which drives the safety significance classification, is typically at least three orders of magnitude lower than the frequency of small leaks. The proposed statistical evaluation method has been peer reviewed and determined to be a satisfactory approach for determining the number of welds that need to be inspected to meet the target leak frequencies at a 95 percent confidence level.

Concluding Remarks

We concur with the staff's conclusion in the SER that, although the calculation of the change in risk (CDF/LERF) using the WCAP methodology is not precise, it will illustrate whether the result is an increase or decrease in risk. It will provide reasonable assurance that the changes to the ISI program will not result in a total risk increase that would exceed the guidelines in Regulatory Guide 1.174.

As we have noted in our recommendations, both the staff and industry have been working diligently to complete the review of the topical report and the Surry pilot project. We believe that implementation of effective risk-informed inservice inspection for piping will be a significant step towards a more efficient regulatory system.

Sincerely,

R. L. Seale

R. L. Seale
Chairman

References:

1. Safety Evaluation Report Related to "Westinghouse Owners Group Application of Risk-Informed Methods to Piping Inservice Inspection" (Topical Report WCAP-14572, Revision 1), received November 4, 1998. (Predecisional)

2. Westinghouse Energy Systems, WCAP-14572, Revision 1, "Westinghouse Owners Group Application of Risk-Informed Methods to Piping Inservice Inspection Topical Report," October 1997.

3. Westinghouse Energy Systems, WCAP-14572, Revision 1, Supplement 1, "Westinghouse Structural Reliability and Risk Assessment (SRRA) Model for Piping Risk-Informed Inservice Inspection," October 1997.

4. Letter dated November 3, 1998, from Lawrence A. Walsh, Westinghouse Owners Group, to Peter C. Wen, U.S. Nuclear Regulatory Commission, Subject: Transmittal of Further Proposed Revisions to WOG RI-ISI Program Reports: WCAP-14572, Revision 1 [Non-Proprietary] "WOG Application of Risk-Informed Methods to Piping Inservice Inspection Topical Report" and WCAP-14572, Revision 1, Supplement 1 [Non-Proprietary] "Westinghouse Structural Reliability and Risk Assessment (SRRA) Model for Piping Risk-Informed Inservice Inspection."

5. Letter dated September 30, 1998, from Louis F. Liberatori, Jr., Westinghouse Owners Group, to Peter C. Wen, U.S. Nuclear Regulatory Commission, Subject: Transmittal of Responses to NRC Open Items on WOG RI-ISI Program and Reports: WCAP-14572, Revision 1 [Non-Proprietary] "WOG Application of Risk-Informed Methods to Piping Inservice Inspection Topical Report" and WCAP-14572, Revision 1, Supplement 1 [Non-Proprietary] "Westinghouse Structural Reliability and Risk Assessment (SRRA) Model for Piping Risk-Informed Inservice Inspection."

6. Report dated June 12, 1998, from R. L. Seale, Chairman, ACRS, to Shirley Ann Jackson, Chairman, NRC, Subject: Proposed Final Standard Review Plan Section 3.9.8 and Regulatory Guide 1.178 for Risk-Informed Inservice Inspection of Piping.

7. W. E. Vesely, Reservations on "ASME Risk-Based Inservice Inspection and Testing: An Outlook to the Future," *Risk Analysis*, Vol. 18, No. 4 (1998), pp. 423-425.

8. ASME Research Members on Risk-Based Inservice Inspection (ISI) and Testing (IST) and Supporting Industry Representatives, Response to Reservations on "ASME Risk-Based Inservice Inspection and Testing: An Outlook to the Future," *Risk Analysis*, Vol. 18, No. 4 (1998), pp. 427-431.

9. U. S. Nuclear Regulatory Commission, Regulatory Guide 1.174, "An Approach for Using Probabilistic Risk Assessment in Risk-Informed Decisions on Plant-Specific Changes to the Licensing Basis," July 1998.

10. U. S. Nuclear Regulatory Commission, Regulatory Guide 1.178, "An Approach for Plant-Specific Risk-Informed Decisionmaking Inservice Inspection of Piping," issued for trial use September 1998.

SUPPLEMENTAL INFORMATION

FROM REPRESENTATIVE WOG PLANT

MILLSTONE UNIT 3 RISK-BASED ISI SUPPLEMENTAL INFORMATION

Introduction

This supplemental information summarizes an implementation of the Westinghouse Owners Group Risk-Based Inservice Inspection (ISI) application for nuclear plant piping systems. Millstone Unit 3 (MP3) was the reference plant for the effort, which took place in a one year period from February 1995 to March 1996. The following provides a brief overview of the WOG process as applied to Millstone Unit 3, with enclosures providing additional detail.

Summary of Results

The Risk-Based Inservice Inspection Project at Millstone Unit 3 has been completed using the methodology described in WCAP-14572. Although Millstone will not request a NRC exemption at this time, the more safety-significant structural elements identified by the new program will be incorporated into the second 10-year ISI program as augmented examinations. A total of 119 elements/ locations have been selected for some type of examination under the Risk-Based ISI program as compared to 753 welds now scheduled under the current ASME Section XI program. Enclosure 1 provides the essence of the Risk-Based ISI program plan. Each of the identified elements will be scheduled for examination in accordance with the requirements of the ASME Code Section XI, Table IWB-2412-1 - Inspection Program B. Simplified P&IDs show all the segments and potential break locations identified by the process, but only those that were selected for examination need to be identified in an Owner's Risk-Based ISI program.

Compliance with PSA Application Guide

The proposed risk-based process is generally consistent with the Electric Power Research Institute (EPRI) PSA Applications Guide, TR-105396, dated August 1995. Enclosure 2 provides a table in which the Guide's Appendix B checklist for technical consistency in a probabilistic safety assessment (PSA) model was addressed for Millstone Unit 3. The MP3 PSA model utilized in this risk-based application is an updated version to the PSA submittal (Reference 1) to the NRC in response to Generic Letter 88-20, Individual Plant Examination for Severe Accident Vulnerabilities (IPE). The NRC Staff evaluation of that submittal was provided to Northeast Nuclear Energy Company (NNECo) in May of 1992 (Reference 2).

Documentation

The documentation to support the WOG/MP3 application of risk-based methods to piping inservice inspection includes:

- Northeast Utilities Service Company (NUSCo) Calculation File PRA96YQA-1198-S3, Rev. 0, "MP3 Risk-based Inspection CDF Calculations"
- MP3 RBI Expert Panel Meeting Minutes from 11/1995 to 3/1996
- MP3 RBI Sub-panel Meeting Minutes from 1/1996 to 3/1996
- Simplified Piping Segment drawings

- Expert Panel Worksheets for each system, and
- Failure Probability Data Collection Worksheets for each systems' piping segments (these are also included in Westinghouse Calc CN-RAS-96-39).

Westinghouse calculation file:

- CN-RAS-96-39, "WOG Risk-Based ISI: Piping Structural Reliability Estimates for Millstone 3"
- CN-RAS-96-40, "WOG Risk-Based ISI: Millstone 3 Walkdown"
- CN-RAS-96-41, "WOG Risk-Based ISI: Expert Panel Segment Ranking Worksheets for Millstone 3"
- CN-RAS-96-42, "WOG Risk-Based ISI: Piping CDF Calculation and Sensitivity Studies for Millstone 3"

Scope of Program

The structural elements considered for the Millstone 3 application included the examination items presently included under Examination Categories B-F, B-J, C-F-1, C-F-2 and D-A only as it relates to Class 3 piping systems that would be included under this category in the 1992 and later editions of ASME Section XI. The process also included evaluation of additional areas and volumes of base material and examination zones such as weld counterbore areas and fitting material with consideration to all piping welds to nozzles, valves and fittings such as tees, elbows, branch connections and safe ends. Welded attachments and piping supports were not included in the program. However, possible snubber degradation was given consideration as a factor which may increase piping fatigue effects.

Overview of the Risk-Based ISI Process

Piping systems were chosen for evaluation based on the criteria provided in Section 3.2 of the WCAP-14572 Topical Report. This required effort in part by personnel from the PSA Section, Stress Analysis and the unit's ISI Group to determine the applicable systems. The chosen systems were then reviewed by the Expert Panel for consistency and completeness. Twenty-one systems were chosen to be evaluated in more detail as shown in Section 3.2-1 of the Topical. To determine the direct and indirect consequences, PSA insights as well as plant design and operations information were used. To determine the indirect effects, the Millstone Unit 3 Hazards Evaluation and the Internal Flooding Analysis performed for the IPE were reviewed. A walkdown was also performed with both Millstone and Westinghouse personnel to address any areas of question.

A total of 259 piping segments were identified through the consequence determination process. Refer to Table 3.6-1 in the Topical for the breakdown of piping segments among systems. The consequences with and without operator action were identified and provided the necessary input to determine the conditional core damage frequency/probability contribution for each piping segment as shown in Section 3.4 and 3.6 of the Topical. In parallel with the consequence determination effort, the Stress Analysis area provided the required input to the structural reliability/risk assessment (SRRA) model to determine the failure probabilities for each piping segment as discussed in Section 3.5.

The risk ranking process involved many sensitivity calculations of the existing PSA model for Millstone Unit 3. These calculations could be broken down into three different types: 1) initiating event consequence only, 2) mitigating system(s) consequence, and 3) initiating event and mitigating system(s) consequence. Existing PSA information provided within the plant IPE submittal was available to determine only the initiating event consequence. As shown in Equation 3-1 of the Topical Report, the required values are the specific initiating event frequency and the associated core damage frequency contribution. The actual PSA model had to be manipulated for the other two types of calculations discussed in Section 3.6. Surrogate basic event(s) representing the same consequence as the piping segment failure were set equal to 1.0 (or failed) within the model to perform the calculations. The total model was recalculated to ensure no sequences were deleted as a result of the original model truncation. For the initiating event and mitigating system(s) consequence calculations, both the specific initiating event as well as the mitigating system basic events were set equal to 1.0 within the database and recalculated. The Millstone Unit 3 PSA model will generally execute the calculations within 20 minutes which made these sensitivity calculations achievable. Table 3.6-1 of the Topical Report provides the core damage frequency contributions for each of the systems addressed. Other considerations, such as external events (seismic, fire, tornado etc.), shutdown and containment performance, were supplied as qualitative information to the Expert Panel in the form of Expert Panel Worksheets (see Table 3.6-3 of the Topical).

Expert Panel

The Expert Panel used for this application is the same panel which is used for the Maintenance Rule and includes personnel from the following disciplines:

Plant Operations
Plant Maintenance
Plant Engineering
Probabilistic Safety Analysis
Safety Analysis
Maintenance Rule Coordinator
Plant Work Planning and Control

In addition to these traditional panel members, personnel with the following expertise in this application were added:

Stress Analysis
Plant ISI
Welding and Test Engineering
Nondestructive Examination.

This additional set of experts also served as a sub-panel for the structural element selections.

The initial meeting of the Expert Panel was a training session on the specific application, PSA and the use of importance measures, and the role of the Expert Panel in the process. To aid the Expert Panel in determining the more safety significant piping

segments, piping segment worksheets as well as associated simplified piping drawings were provided. The Expert Panel's responsibilities included the acceptance of the system list for this application, review of piping segment boundaries and consequence, providing additional information on the worksheets, and the final determination of safety significance. The Expert Panel provided significant input in the area of consequences which resulted in changes to the originally postulated consequences and in a few cases, changes to the piping segment boundaries. Operations was critical in determining whether operator recovery action was possible given a specific pipe rupture. Safety Analysis also provided input on the time available to take certain operator actions if necessary. A total of eight expert panel meetings, each taking about 1-2 hours, were held to evaluate the safety significance of the piping segments.

Enclosure 3 provides an example of the MP3 RBI Expert Panel Meeting Minutes (w/o Attachments). Table 3.6-6 of the Topical lists the number of piping segments determined to be more safety-significant by the Expert Panel. A total number of 96 or 37% of the piping segments were determined to be more safety-significant. The Expert Panel included all the piping segments with a Risk Reduction Worth (RRW) of 1.005 as well as several others based on other considerations such as shutdown risk.

Structural Element Selection

Once the more safety-significant segments were identified, a sub-panel consisting of the members with special expertise in this area met to evaluate which structural elements should be examined and the examination method to be employed. Four sub-panel meetings were held to address the 96 more safety-significant segments. The sub-panel reviewed each proposed inspection location within those segments and verified that these were the potential failure locations within each respective segment. In some cases, more than one element was selected. For each element, the sub-panel determined the examination method to be used. The panel considered available technology which would best detect any flaws. The final list of structural elements was consolidated into a single list and input to a modified version of the existing Section XI database program.

Risk / Safety Evaluation

Figure 4.3-1 of the Topical shows a comparison of the core damage frequency being addressed by examination of the 119 structural elements in the Risk-Based ISI program versus the 753 weld locations that are examined per current ASME Section XI requirements. Examination of the current ASME Code weld locations addresses a total CDF of 1.0E-08/yr (44% of total) while examination of the Risk-Based ISI structural elements addresses a total CDF of 2.25E-08/yr (98% of total) for pressure boundary piping failures. Thus, safety is enhanced with far less locations being inspected.

The total piping core damage frequency is a small fraction of the total plant core damage frequency of 5.87E-05/yr. Examination of the plant piping at the risk-based locations, however, will verify that the risk of piping pressure boundary failure remains a small contributor to total risk as the unit ages over its licensed life.

Economic Evaluation

The economic evaluation addresses the current Section XI piping examination costs and the savings to be realized in the reduction of these examinations. The basis of this comparison includes the direct costs incurred in performing current Section XI required examinations during MP3's fifth refueling outage. The direct costs are as follows

Refueling Outage 5 Examination Costs	
Examination Costs	$167,000
Insulation Removal/Reinstallation	$123,000
Required Scaffolding	$ 96,000
Total	$386,000

The Risk-Based ISI application resulted in a reduction of approximately 86% of the piping examinations required in comparison with the current program. Therefore, on a strictly direct cost basis, the ISI program savings associated with implementing the risk-based program would be approximately $332,000 per outage. MP3 has three more 10 year inspection intervals remaining within the current operating license. Given that MP3 averages 5 outages per interval, this $332,000 savings is expected to be gained 15 times over the licensed life of the unit.

During Refueling Outage 5, it is estimated that 17 Person-Rem were expended in performing the examination of current Section XI required locations. It is estimated that only 2 Person-Rem would be expended to examine the risk-based locations, resulting in a 15 Person-Rem savings each outage.

In addition, other indirect cost savings are expected from items such as reduction in costs associated with evaluating flaw indications, which may not really exist (i.e., false call), in less safety-significant piping systems.

Utility's Perspective

A significant amount of time was spent in developing this process; however, the actual implementation effort would be greatly reduced for the other Northeast Utilities units. Other nuclear plants could implement the process with similar efficiency. In addition, the knowledge gained from this application is able to be applied to other risk-based applications. Hence this is a worthwhile application for any utility. With moderate resources and team effort, the program will be a success in terms of both safety and economic benefits.

References:

1) E. J. Mroczka Letter to U.S. Nuclear Regulatory Commission, " Millstone Nuclear Power Station, Unit No. 3 Response to Generic Letter 88-20 Individual Plant Examination for Severe Accident Vulnerabilities Summary Report Submittal", dated August 31, 1990.

2) U.S. NRC Letter to J. F. Opeka, " Staff Evaluation of Millstone 3 Individual Plant Examination (IPE) - Internal Events, GL 88-20 (TAC No. M74434)", dated May 8, 1992.

ENCLOSURE 1

MILLSTONE UNIT 3 RISK-BASED

ISI PROGRAM PLAN

Millstone Unit 3
Risk-Based ISI Plan Element Selections

Reactor Component Cooling System

CCP-1
Failure Mode: Cracking - External Loads FP 1.0E-08*
Not in ISI Program. (CCP-010-492-RBI-1-3) VT-2, MT
10" Pipe to Flange Fillet Weld Class 3 C/S Piping shown in Zone 157
DWG# S&W 12179-CI-CCP-264 SH.1 of 3

CCP-2
Failure Mode: Cracking - External Loads FP 1.0E-08*
Not in ISI Program. (CCP-010-28-RBI-1-3) VT-2, MT
10" Pipe to Flange Fillet Weld Class 3 C/S Piping shown in Zone 167
DWG# S&W 12179-CI-CCP-6 SH.3 of 4

CCP-4
Failure Mode: Cracking - Vibration Fatigue FP 1.7E-08
Not in ISI Program. (CCP-018-1-RBI-1-3) VT-2, RT
14" Expander to Flange Weld Class 3 C/S Piping shown in Zone 165
Exam volume to extend 1" on expander side of weld.
DWG# S&W 12179-CI-CCP-22 SH.3 of 3

CCP-5
Failure Mode: Cracking - Vibration Fatigue FP 1.7E-08
Not in ISI Program. (CCP-018-2-RBI-1-3) VT-2, RT
Not in ISI Program. (CCP-018-3-RBI-1-3) VT-2, RT
14" Expander to Flange Weld Class 3 C/S Piping shown in Zone 159
14" Expander to Flange Weld Class 3 C/S Piping shown in Zone 163
Exam volume to extend 1" on expander side of weld.
DWG# S&W 12179-CI-CCP-23 SH.3 of 3 / 12179-CI-CCP-24 SH.3 of 3

Chemical & Volume Control System

CHS-3
Failure Mode: Cracking - Vibration Fatigue FP 1.0E-08*
Not in ISI Program. (CHS-002-565-RBI-1-2) VT-2, RT
Not in ISI Program. (CHS-002-564-RBI-1-2) VT-2, RT
Not in ISI Program. (CHS-002-566-RBI-1-2) VT-2, RT
Three 2" Pipe to Reducer Welds Class 2 S/S
Schedule exams following pump test.
DWG# S&W 12179-CP-374002 SH.3 of 3 / 12179-CP-374508 SH.3 of 3 / 12179-CP-374509 SH.3 of 3

*Failure Probability < 1.0E-08

CHS-5
Failure Mode: Cracking - Thermal Fatigue FP 1.0E-08*
ISI Zone: 128 (SIH-3-5-SW-D) 4" Tee to Pipe Weld VT-2, UT
Exam volume to extend 1" on each side of weld.
DWG# 25212-20990 Class 2 S/S

CHS-7
Failure Mode: Cracking - External Loads FP 1.0E-08*
ISI Zone: 133 (CHS-35-2-SW-4) 3" Pipe to Tee Weld VT-2, UT
Exam volume to extend 1" on each side of weld.
DWG# 25212-20354 Class 2 S/S

CHS-23
Failure Mode: Cracking - Thermal Fatigue FP 1.0E-08*
ISI Zone: 128 (SIH-3-FW-10) 3" Pipe to Penetration Weld VT-2, UT
Exam volume to extend 1" on each side of weld.
DWG# 25212-20990 Class 2 S/S

Emergency Core Cooling System

ECCS-0
Failure Mode: Cracking - OD Corrosion External Loads FP 1.0E-08*
ISI Zone: 119 (SIL-508-RBI-1) Class 2 S/S VT-2, ET
Base metal of 24" pipe at ground interface. Exam area 3" above and below interface.
DWG# 25212-20896

Auxiliary Feedwater System

FWA-7
Failure Mode: Cracking - Vibration Fatigue FP 1.0E-08*
2" Reducer to Pipe Weld. Class 3 C/S
Not in ISI Program. (FWA-002-142-RBI-1-3) VT-2, RT
Schedule exams following pump test or inservice operation.
DWG# S&W 12179-CI-FWA-9 SHT.1 of 6

FWA-12
Failure Mode: Cracking - External Loads FP 1.0E-08*
4" Tee to Pipe Weld.
ISI Zone: 110 (FWA-8-FW-36-1) VT-2, MT, RT
Exam volume and area to extend 1" on each side of weld.
DWG# 25212-20887 Class 2 C/S

FWA-13 Less-Safety-Significant Segment & Element Chosen For Plant Reliability
Failure Mode: Cracking - Thermal Fatigue FP 1.0E-08*
16" Reducing Elbow to SG Nozzle Weld on Main Feedwater Line Loop D.
ISI Zone: 68 (FWS-25-FW-71) VT-2, RT
Exam volume to extend 2" on each side of weld. Leak probability w/o ISI 9.5E-04.
DWG# 25212-20966 Class 2 C/S

FWA-14
Failure Mode: Cracking - External Loads FP 1.0E-08*
4" Tee to Pipe Weld.
ISI Zone: 109 (FWA-19-4-SW-F) VT-2, MT, RT
Exam volume and area to extend 1" on each side of weld.
DWG# 25212-20859 Class 2 C/S

FWA-15 Less-Safety-Significant Segment & Element Chosen For Plant Reliability
Failure Mode: Cracking - Thermal Fatigue FP 1.0E-08*
16" Pipe to SG Nozzle Weld on Main Feedwater Line Loop C.
ISI Zone: 67 (FWS-22A-FW-38) VT-2, UT
Exam volume to extend 2" on each side of weld. Leak probability w/o ISI 9.9E-04.
DWG# 25212-20965 Class 2 C/S

FWA-16
Failure Mode: Cracking - External Loads FP 1.0E-08*
4" Tee to Pipe Weld.
ISI Zone: 108 (FWA-5-4-SW-E) VT-2, MT, RT
Exam volume and area to extend 1" on each side of weld.
DWG# 25212-20858 Class 2 C/S

FWA-17 Less-Safety-Significant Segment & Element Chosen For Plant Reliability
Failure Mode: Cracking - Thermal Fatigue FP 1.0E-08*
16" Pipe to SG Nozzle Weld on Main Feedwater Line Loop B.
ISI Zone: 66 (FWS-21-FW-50) VT-2, UT
Exam volume to extend 2" on each side of weld. Leak probability w/o ISI 9.8E-04.
DWG# 25212-20964 Class 2 C/S

FWA-18
Failure Mode: Cracking - External Loads FP 1.0E-08*
4" Tee to Pipe Weld.
ISI Zone: 107 (FWA-6-1-SW-C) VT-2, MT, RT
Exam volume and area to extend 1" on each side of weld.
DWG# 25212-20857 Class 2 C/S

FWA-19 Less-Safety-Significant Segment & Element Chosen For Plant Reliability
Failure Mode: Cracking - Thermal Fatigue FP 1.0E-08*
16" Reducing Elbow to SG Nozzle Weld on Main Feedwater Line Loop A.
ISI Zone: 65 (FWS-23A-FW-125) VT-2, RT

Exam volume to extend 2" on each side of weld. Leak probability w/o ISI 9.5E-04.
DWG# 25212-20963 Class 2 C/S

Quench Spray System

QSS-2
Failure Mode: Cracking - Vibration Fatigue FP 1.0E-08*
ISI Zone: 98 (QSS-1-1-SW-D) 12" Pipe to Elbow Weld VT-2, UT
ISI Zone: 97 (QSS-3-1-SW-D) 12" Pipe to Elbow Weld VT-2, UT
Schedule exams following pump test. Class 2 S/S
DWG# 25212-20874 & 20873

Reactor Coolant System

RCS-1
Failure Mode: Cracking - Thermal Fatigue FP 4.1E-07
12" Branch Connection Weld to 29" Run Pipe.
ISI Zone: 12 (RCS-LP1-FW-HL1-CMR) VT-2, UT
UT exam limited to branch connection side of weld and the exam volume will be extended 1" on the branch side of the weld.
DWG# 25212-20910 Class 1 S/S to Cast S/S

RCS-2
Failure Mode: Cracking - Vibration Fatigue FP 4.1E-07
29" Dissimilar Metal Weld Elbow to SG.
ISI Zone: 12 (RCS-LP1-FW-4) VT-2, RT or UT
Special UT exam would be performed from the ID of the SG channel head nozzle.
DWG# 25212-20910 Class 1 Cast S/S to C/S

RCS-3
Failure Mode: Cracking - Vibration Fatigue FP 1.0E-07
2" Branch Connection Weld to 31" Run Pipe.
ISI Zone: 12 (RCS-LP1-EC2-SW-F) VT-2
The selected break location is on the 31"pipe. Selection of this exam method is justified by the leak before analysis described in WCAP-10587 dated June 1984.
DWG# 25212-20910 Class 1 S/S to Cast S/S

RCS-4
Failure Mode: Cracking - Thermal Fatigue FP 1.0E-08*
2" Pipe to Branch Connection Weld and Two 2" Pipe to Elbow Welds.
ISI Zone: 47 (RCS-374076-FW-1) VT-2, RT
ISI Zone: 47 (RCS-374076-FW-5) VT-2, RT
ISI Zone: 47 (RCS-374076-FW-6) VT-2, RT
DWG# 25212-20949 Class 1 S/S

RCS-5
Failure Mode: Cracking - External Loads FP 3.5E-07
27.5" Pipe to Valve Weld.
ISI Zone: 12 (RCS-5-FW-8) VT-2
Leak before break analysis has been considered in the selection of this exam method in accordance with WCAP-10587 dated June 1984.
DWG# 25212-20910 Class 1 Cast S/S

RCS-6
Failure Mode: Cracking - Thermal Fatigue FP 3.4E-07
27.5" Dissimilar Metal Weld Safe End to RPV Nozzle.
ISI Zone: 12 (RCS-301-121-C) VT-2, UT
Full volume UT exam performed from the ID of the nozzle during RPV weld exams.
DWG# 25212-20910 Class 1 S/S to C/S

RCS-7
Failure Mode: Cracking - Thermal Fatigue FP 1.0E-08*
10" Pipe to Branch Connection Weld.
ISI Zone: 22 (SIL-4-FW-11) VT-2, UT
Exam volume to extend 1" on pipe side of weld.
DWG# 25212-20924 Class 1 S/S

RCS-8
Failure Mode: Cracking - Thermal Fatigue FP 5.5E-07
29" Dissimilar Metal Weld Safe End to RPV Nozzle.
ISI Zone: 13 (RCS-302-121-D) VT-2, UT
Full volume UT exam performed from the ID of the nozzle during RPV weld exams.
DWG# 25212-20911 Class 1 S/S to C/S

RCS-9
Failure Mode: Cracking - Vibration Fatigue FP 4.4E-07
29" Pipe Weld to Valve Cast S/S.
ISI Zone: 13 (RCS-LP2-FW-2) VT-2
Leak before break analysis has been considered in the selection of this exam method in accordance with WCAP-10587 dated June 1984.
DWG# 25212-20911 Class 1 Cast S/S

RCS-10
Failure Mode: Cracking - Vibration Fatigue FP 4.4E-07
29" Dissimilar Metal Weld Elbow to SG.
ISI Zone: 13 (RCS-LP2-FW-4) VT-2, RT or UT
Special UT exam would be performed from the ID of the SG channel head nozzle.
DWG# 25212-20911 Class 1 Cast S/S to C/S

RCS-11
Failure Mode: Cracking - Vibration Fatigue FP 6.4E-07
31" Pipe to Elbow Weld.
ISI Zone: 13 (RCS-LP2-EC2-SW-B) VT-2
Leak before break analysis has been considered in the selection of this exam method in accordance with WCAP-10587 dated June 1984.
DWG# 25212-20911 Class 1 Cast S/S

RCS-12
Failure Mode: Cracking - Thermal Fatigue FP 1.0E-08*
2" Pipe to Branch Connection Weld and Two 2" Pipe to Elbow Welds.
ISI Zone: 49 (RCS-374078-FW-11) VT-2, RT
ISI Zone: 49 (RCS-374078-FW-5) VT-2, RT
ISI Zone: 49 (RCS-374078-FW-7) VT-2, RT
DWG# 25212-20951 Class 1 S/S

RCS-13
Failure Mode: Cracking - External Loads FP 3.8E-07
27.5" Pipe to Valve Weld.
ISI Zone: 13 (RCS-10-FW-18) VT-2
Leak before break analysis has been considered in the selection of this exam method in accordance with WCAP-10587 dated June 1984.
DWG# 25212-20911 Class 1 Cast S/S

RCS-14
Failure Mode: Cracking - Thermal Fatigue FP 4.8E-07
27.5" Dissimilar Metal Weld Safe End to RPV Nozzle.
ISI Zone: 13 (RCS-301-121-D) VT-2, UT
Full volume UT exam performed from the ID of the Nozzle during RPV weld exams.
DWG# 25212-20911 Class 1 S/S to C/S

RCS-15
Failure Mode: Cracking - Thermal Fatigue FP 1.0E-08*
1.5" Pipe to Valve Weld.
ISI Zone: 38 (RCS-408045-FW-4) VT-2, RT
DWG# 25212-20940 Class 1 S/S

RCS-16
Failure Mode: Cracking - Thermal Fatigue FP 5.5E-07
29" Dissimilar Metal Weld Safe End to RPV Nozzle.
ISI Zone: 14 (RCS-302-121-A) VT-2, UT
Full volume UT exam performed from the ID of the nozzle during RPV weld exams.
DWG# 25212-20912 Class 1 S/S to C/S

RCS-17
Failure Mode: Cracking - Vibration Fatigue FP 4.1E-07
29" Dissimilar Metal Weld Elbow to SG.
ISI Zone: 14 (RCS-LP3-FW-4) VT-2, RT or UT
Special UT exam would be performed from the ID of the SG channel head nozzle.
DWG# 25212-20912 Class 1 Cast S/S to C/S

RCS-18
Failure Mode: Cracking - Vibration Fatigue FP 4.1E-06
2" Branch Connection Weld to 31" Run Pipe.
ISI Zone: 14 (RCS-LP3-EC2-SW-F) VT-2
Break location is on the 31" pipe. Leak before break analysis has been considered in the selection of this exam method in accordance with WCAP-10587 dated June 1984.
DWG# 25212-20912 Class 1 S/S to Cast S/S

RCS-19
Failure Mode: Cracking - Thermal Fatigue FP 1.0E-08*
2" Pipe to Branch Connection Weld and One 2" Elbow to Pipe Weld.
ISI Zone: 50 (RCS-374079-FW-1) VT-2, RT
ISI Zone: 50 (RCS-374079-FW-7) VT-2, RT
DWG# 25212-20952 Class 1 S/S

RCS-20
Failure Mode: Cracking - External Loads FP 3.5E-07
27.5" Pipe to Valve Weld.
ISI Zone: 14 (RCS-15-FW-28) VT-2
Leak before break analysis has been considered in the selection of this exam method in accordance with WCAP-10587 dated June 1984.
DWG# 25212-20912 Class 1 Cast S/S

RCS-21
Failure Mode: Cracking - Thermal Fatigue FP 4.7E-07
27.5" Dissimilar Metal Weld Safe End to RPV Nozzle.
ISI Zone: 14 (RCS-301-121-A) VT-2, UT
Full volume UT exam performed from the ID of the nozzle during RPV weld exams.
DWG# 25212-20912 Class 1 S/S to C/S

RCS-22
Failure Mode: Cracking - Thermal Fatigue FP 1.0E-08*
10" Pipe to Branch Connection Weld.
ISI Zone: 25 (SIL-6-FW-11) VT-2, UT
Exam volume to extend 1" on pipe side of weld.
DWG# 25212-20927 Class 1 S/S

RCS-23
Failure Mode: Cracking - Thermal Fatigue FP 4.1E-07
12" Branch Connection Weld to 29" Run Pipe.
ISI Zone: 15 (RCS-LP4-FW-HL1-CMR) VT-2, UT
UT exam limited to branch connection side of weld and the exam volume will be extended 1" on the branch side of the weld.
DWG# 25212-20913 Class 1 S/S to Cast S/S

RCS-24
Failure Mode: Cracking - Vibration Fatigue FP 4.4E-07
29" Dissimilar Metal Weld Elbow to SG.
ISI Zone: 15 (RCS-LP4-FW-4) VT-2, RT or UT
Special UT exam would be performed from the ID of the SG channel head nozzle.
DWG# 25212-20913 Class 1 Cast S/S to C/S

RCS-25
Failure Mode: Cracking - Vibration Fatigue FP 6.4E-07
31" Pipe to Elbow Weld.
ISI Zone: 15 (RCS-LP4-EC2-SW-B) VT-2, RT or Vibration Monitoring
This weld may have a relatively higher vibration level than other welds in the segment. If vibration monitoring is used and the results are negligible, only a VT-2 exam of this weld will be performed. This exam method is then justified by the leak before break analysis described in WCAP-10587 dated June 1984.
DWG# 25212-20913 Class 1 Cast S/S

RCS-26
Failure Mode: Cracking - Thermal Fatigue FP 1.0E-08*
2" Pipe to Branch Connection Weld and 2" Elbow to Pipe Weld.
ISI Zone: 52 (RCS-374077-FW-11) VT-2, RT
ISI Zone: 52 (RCS-374077-FW-7) VT-2, RT
DWG# 25212-20954 Class 1 S/S

RCS-27
Failure Mode: Cracking - External Loads FP 3.8E-07
27.5" Pipe to Valve Weld.
ISI Zone: 15 (RCS-20-FW-38) VT-2
Leak before break analysis has been considered in the selection of this exam method in accordance with WCAP-10587 dated June 1984.
DWG# 25212-20913 Class 1 Cast S/S

RCS-28
Failure Mode: Cracking - Thermal Fatigue FP 4.8E-07
27.5" Dissimilar Metal Weld Safe End to RPV Nozzle.
ISI Zone: 15 (RCS-301-121-B) VT-2, UT
Full volume UT exam performed from the ID of the nozzle during RPV weld exams.
DWG# 25212-20913 Class 1 S/S to C/S

RCS-29
Failure Mode: Cracking - Thermal Fatigue FP 1.0E-08*
10" Pipe to Branch Connection Weld.
ISI Zone: 26 (SIL-7-FW-11) VT-2, UT
Exam volume to extend 1" on pipe side of weld.
DWG# 25212-20928 Class 1 S/S

Failure Mode: Cracking - Thermal Fatigue FP 1.0E-08*
14" Elbow to Pipe Weld.
ISI Zone: 16 (RCS-SL-FW-3) VT-2, UT
Exam volume to extend 1" on each side of weld.
DWG# 25212-20918 Class 1 S/S

RCS-31
Failure Mode: Cracking - Thermal Fatigue FP 1.0E-08*
6" Pipe to Elbow Weld.
ISI Zone: 20 (RCS-516-1-SW-5) VT-2, UT
Exam volume to extend 1" on each side of weld.
DWG# 25212-20922 Class 1 S/S

RCS-32
Failure Mode: Cracking - Thermal Fatigue FP 1.0E-08*
6" Elbow to pipe Weld.
ISI Zone: 20 (RCS-516-FW-13-1) VT-2, UT
Exam volume to extend 1" on each side of weld.
DWG# 25212-20922 Class 1 S/S

RCS-33
Failure Mode: Cracking - Thermal Fatigue FP 1.0E-08*
6" Elbow to pipe Weld.
ISI Zone: 20 (RCS-516-6-SW-2) VT-2, UT
Exam volume to extend 1" on each side of weld.
DWG# 25212-20922 Class 1 S/S

RCS-34
Failure Mode: Cracking - Thermal Fatigue FP 1.0E-08*
3" Tee to Pipe Weld.
ISI Zone: 21 (RCS-513-1-SW-7) VT-2, UT
Exam volume to extend 1" on pipe side of weld.
DWG# 25212-20923 Class 1 S/S

RCS-35
Failure Mode: Cracking - Thermal Fatigue FP 1.0E-08*
3" Pipe to Flange Weld.
ISI Zone: 21 (RCS-513-3-SW-2) VT-2, UT
Exam volume to extend 1" on pipe side of weld.
DWG# 25212-20923 Class 1 S/S

RCS-36
Failure Mode: Cracking - Thermal Fatigue FP 1.0E-08*
3" Pipe to Flange Weld.
ISI Zone: 21 (RCS-513-4-SW-2) VT-2, UT
Exam volume to extend 1" on pipe side of weld.
DWG# 25212-20923 Class 1 S/S

RCS-38
Failure Mode: Cracking - Thermal Fatigue FP 1.0E-08*
2" Pipe to Elbow Weld.
ISI Zone: 43 (RCS-408005-FW-1) VT-2, RT
DWG# 25212-20945 Class 1 S/S

RCS-40
Failure Mode: Cracking - Thermal Fatigue FP 1.0E-08*
6" Dissimilar Metal Weld Pressurizer Spray Nozzle to Safe End.
ISI Zone: 7 (RCS-03-X-5641-E-T) VT-2, RT
DWG# 25212-20905 Class 1 C/S to S/S

RCS-42
Failure Mode: Cracking - Thermal Fatigue FP 1.0E-08*
12" Pipe to Tee Weld.
ISI Zone: 27 (RCS-501-1-SW-5) VT-2, UT
Exam volume to extend 1" on each side of weld.
DWG# 25212-20929 Class 1 S/S

RCS-43
Failure Mode: Cracking - Thermal Fatigue FP 1.0E-07
8" Valve to Pipe Weld.
ISI Zone: 29 (RCS-504A-FW-2) VT-2, UT
Exam volume to extend 1" on pipe side of weld.
DWG# 25212-20931 Class 1 S/S

RCS-45
Failure Mode: Cracking - Thermal Fatigue FP 1.0E-08*
4" Branch Connection to Pipe Weld.
ISI Zone: 17 (RCS-518-FW-1) VT-2, UT
Exam volume to extend 1" on pipe side of weld.
DWG# 25212-20919 Class 1 S/S

RCS-47
Failure Mode: Cracking - Thermal Fatigue FP 1.0E-08*
3" Elbow to Branch Connection Weld and 3" Pipe to Elbow Weld.
ISI Zone: 48 (3-CHS-14-FW-12) VT-2, UT
ISI Zone: 48 (3-CHS-14-FW-20) VT-2, UT
Exam volume to extend 1" on the pipe side of the pipe to elbow weld.
DWG# 25212-20950 Class 1 S/S

RCS-49
Failure Mode: Cracking - Thermal Fatigue FP 1.0E-08*
Two 1.5" Tee to Pipe Welds and One Tee to Reducer Weld.
ISI Zone: 37 (RCS-408046-FW-6) VT-2, RT
ISI Zone: 37 (RCS-408046-FW-7) VT-2, RT
ISI Zone: 37 (RCS-408046-FW-9) VT-2, RT
DWG# 25212-20939 Class 1 S/S

RCS-50
Failure Mode: Cracking - Thermal Fatigue FP 1.0E-08*
6" Pipe to Elbow Weld.
ISI Zone: 24 (SIL-13-4-SW-C) VT-2, UT
Exam volume to extend 1" on each side of weld.
DWG# 25212-20926 Class 1 S/S

RCS-51
Failure Mode: Cracking - Thermal & Vibration Fatigue FP 1.0E-08*
8" Pipe to Valve Nozzle Weld.
ISI Zone: 30 (RCS-504B-FW-4) VT-2, UT
Exam volume to extend 1" on pipe side of weld.
DWG# 25212-20932 Class 1 S/S to Cast S/S

RCS-53
Failure Mode: Cracking - Thermal Fatigue FP 1.0E-08*
4" Pipe to Branch Connection Weld.
ISI Zone: 18 (RCS-517-FW-1) VT-2, UT
Exam volume to extend 1" on pipe side of weld.
DWG# 25212-20920 Class 1 S/S

RCS-54
Failure Mode: Cracking - Thermal Fatigue FP 1.0E-08*
10" Pipe to Elbow Weld.
ISI Zone: 23 (SIL-5-6-SW-B) VT-2, UT
Exam volume to extend 1" on each side of weld.
DWG# 25212-20925 Class 1 S/S

RCS-55
Failure Mode: Cracking - Thermal Fatigue FP 1.0E-08*
6" Pipe to Valve Weld.
ISI Zone: 39 (RCS-LP3-FW-27) VT-2, UT
Exam volume to extend 1" on pipe side of weld.
DWG# 25212-20941 Class 1 S/S

RCS-56
Failure Mode: Cracking - Thermal Fatigue FP 1.0E-07
8" Pipe to Valve Weld.
ISI Zone: 31 (RCS-504C-FW-2) VT-2, UT
Exam volume to extend 1" on pipe side of weld.
DWG# 25212-20933 Class 1 S/S

RCS-58
Failure Mode: Cracking - Thermal Fatigue FP 1.0E-08*
3" Pipe to Elbow Weld.
ISI Zone: 51 (RCS-507-1-SW-2) VT-2, UT
Exam volume to extend 1" on each side of weld.
DWG# 25212-20953 Class 1 S/S

RCS-60
Failure Mode: Cracking - Thermal Fatigue FP 1.0E-08*
1.5" Pipe to Valve Weld.
ISI Zone: 40 (RCS-408044-FW-10-1) VT-2, RT
DWG# 25212-20942 Class 1 S/S

RCS-61
Failure Mode: Cracking - Thermal Fatigue FP 1.0E-08*
12" Pipe to Branch Connection Weld.
ISI Zone: 28 (RHS-502-FW-1) VT-2, UT
Exam volume to extend 1" on pipe side of weld.
DWG# 25212-20930 Class 1 S/S

RCS-62
Failure Mode: Cracking - Thermal & Vibration Fatigue FP 1.0E-08*
8" Pipe to Valve Nozzle Weld.
ISI Zone: 32 (RCS-504D-FW-4) VT-2, UT
Exam volume to extend 1" on pipe side of weld.
DWG# 25212-20934 Class 1 S/S to Cast S/S

RCS-64
Failure Mode: Cracking - Thermal Fatigue FP.1.0E-08*
3" Elbow to Branch Connection Weld and 3" Pipe to Elbow Weld.
ISI Zone: 48 (3-CHS-15-FW-15) VT-2, UT
ISI Zone: 48 (3-CHS-15-FW-26) VT-2, UT

Exam volume to extend 1" on pipe side of the pipe to elbow weld.
DWG# 25212-20950 Class 1 S/S

RCS-66
Failure Mode: Cracking - Thermal Fatigue FP 1.0E-08*
Two 1.5" Pipe to Tee Welds and One 1.5" Tee to Reducer Weld.
ISI Zone: 41 (RCS-408043-FW-14) VT-2, RT
ISI Zone: 41 (RCS-408043-FW-8) VT-2, RT
ISI Zone: 41 (RCS-408043-FW-9) VT-2, RT
DWG# 25212-20943 Class 1 S/S

Containment Recirculation System

RSS-11
Failure Mode: Cracking - Vibration Fatigue FP 1.0E-08*
ISI Zone: 90 (SIH-12-FW-8) 6" Pipe to Valve Weld VT-2, UT
Exam volume to extend 1" on pipe side of weld.
DWG# 25212-20990 Class 2 S/S

High Pressure Safety Injection System

SIH-1
Failure Mode: Cracking - External Loads FP 1.0E-08*
ISI Zone: 90 (SIH-13-3-SW-E) 8" Tee to Pipe Weld VT-2, UT
Exam volume to extend 1" on each side of weld.
DWG# 25212-20867 Class 2 S/S

SIH-2
Failure Mode: Cracking - Vibration Fatigue FP 1.8E-08
Not in ISI Program. (SIH-9-RBI-1) 3" Flange to Reducer Weld VT-2, RT
Schedule exam following pump test. Exam volume to extend 1" on reducer side.
DWG# 25212-20403 SH.25 / S&W 12179-CI-SIH-9 SHT.1 of 4 Class 2 S/S

SIH-3
Failure Mode: Cracking - Vibration Fatigue FP 1.8E-08
Not in ISI Program. (SIH-7-RBI-1) 3" Flange to Reducer Weld VT-2, RT
Schedule exam following pump test. Exam volume to extend 1" on reducer side.
DWG# 25212-20403 SH.17 / S&W 12179-CI-SIH-7 SHT.1 of 5 Class 2 S/S

SIH-4
Failure Mode: Cracking - External Loads FP 1.0E-08*
ISI Zone: 127 (SIH-8-FW-6) 4" Pipe to Valve Weld VT-2, UT
Exam volume to extend 1" on pipe side of weld. Class 2 S/S
DWG# 25212-20289

Low Pressure Safety Injection System

SIL-1
Failure Mode: Cracking - Thermal Fatigue FP 1.0E-08*
3" Pipe to Branch Connection Weld. Class 2 S/S
Not in ISI Program. (RHS-003-16-RBI-1-2) VT-2, RT
Exam volume to extend 1" on pipe side of weld. Piping shown in Zone 118
DWG# S&W 12179-CI-RHS-9 SHT.1 of 4

SIL-2
Failure Mode: Cracking - Thermal Fatigue FP 1.0E-08*
12" Pipe to Tee Weld.
ISI Zone: 113 (SIL-9T-FW-10) VT-2, UT
Exam volume to extend 1" on each side of weld.
DWG# 25212-20890 Class 2 S/S

SIL-3
Failure Mode: Cracking - Thermal Fatigue FP 1.0E-08*
8" Pipe to 3" Long Transition Piece Weld and 3" Transition Piece to Valve Weld.
ISI Zone: 89 (SIL-11-1-SW-M) VT-2, RT
ISI Zone: 89 (SIL-11-FW-2) VT-2, RT
Exam volume to extend 1" on each side of first weld and 1" on transition piece of second weld including the valve side counterbore region of the valve body.
DWG# 25212-20866 Class 2 S/S

SIL-4
Failure Mode: Cracking - Thermal Fatigue FP 1.0E-08*
6" Tee to Pipe Weld.
ISI Zone: 79 (SIL-501-1-SW-5) VT-2, UT
Exam volume to extend 1" on each side of weld.
DWG# 25212-20971 Class 2 S/S

SIL-5
Failure Mode: Cracking - Thermal Fatigue FP 1.0E-08*
6" Reducer to Pipe Weld.
ISI Zone: 80 (SIL-504-1-SW-7) VT-2, UT
Exam volume to extend 1" on pipe side of weld.
DWG# 25212-20972 Class 2 S/S

Service Water System

SWP-1
Failure Mode: Cracking - Vibration Fatigue & Erosion FP 2.6E-08
30" Elbow to Pipe Weld.
Not in ISI Program. (SWP-030-7-RBI-1-3) VT-2, VT-3, UT

Exam volume to extend 1" on each side of weld. Internal VT-3 of ARCOR coating to be performed at time of check valve dissassembly once per interval.
Piping shown in Zone 181 Class 3 C/S/CUNi Clad
DWG# S&W 12179-CI-SWP-18 SHT.1 of 6

SWP-2
Failure Mode: Cracking - Vibration Fatigue & Erosion FP 2.6E-08
30" Elbow to Pipe Weld.
Not in ISI Program. (SWP-030-2-RBI-1-3) VT-2, VT-3, UT
Exam volume to extend 1" on each side of weld. Internal VT-3 of ARCOR coating to be performed at time of check valve dissassembly once per interval.
Piping shown in Zone 181 Class 3 C/S/CUNi Clad
DWG# S&W 12179-CI-SWP-18 SHT.1 of 6

SWP-3
Failure Mode: Cracking - Vibration Fatigue & Erosion FP 2.6E-08
30" Elbow to Pipe Weld.
Not in ISI Program. (SWP-030-415-RBI-1-3) VT-2, VT-3, UT
Exam volume to extend 1" on each side of weld. Internal VT-3 of ARCOR coating to be performed at time of check valve dissassembly once per interval.
Piping shown in Zone 182 Class 3 C/S/CUNi Clad
DWG# S&W 12179-CI-SWP-19 SHT.1 of 6

SWP-4
Failure Mode: Cracking - Vibration Fatigue & Erosion FP 2.6E-08
30" Pipe to Chek Valve Flange Weld.
Not in ISI Program. (SWP-030-18-RBI-1-3) VT-2, VT-3, UT
Exam volume to extend 1" on pipe side of weld. Internal VT-3 of ARCOR coating to be performed at time of check valve dissassembly once per interval.
Piping shown in Zone 182 Class 3 C/S/CUNi Clad
DWG# S&W 12179-CI-SWP-19 SHT.1 of 6

SWP-5
Failure Mode: Cracking - External Loads & Erosion FP 1.0E-08*
8" Pipe Branch Tee With a Reinforcing Collar Welded to the 8" & 10" Pipe.
Not in ISI Program. (SWP-008-74-RBI-1-3) VT-2, PT
Not in ISI Program. (SWP-008-74-RBI-2-3) VT-2, PT
Exam area includes the inside collar weld RBI-1 and the outside collar weld RBI-2.
Piping shown in Zone 178 Class 3 CUNi
DWG# S&W 12179-CI-SWP-33 SHT.2 of 8

SWP-6
Failure Mode: Cracking - External Loads & Erosion FP 1.0E-08*
6" Pipe to Pipe Bimetallic Weld.
Not in ISI Program. (SWP-006-48-RBI-1-3) VT-2, UT
Exam volume to include 2" of base metal on the CUNi side of the weld for wall thinning.

Piping shown in Zone 175 Class 3 CUNi to Monel
DWG# S&W 12179-CI-SWP-30S SHT.1 of 6

SWP-7
Failure Mode: Cracking - External Loads & Erosion FP 1.0E-08*
8" Pipe Branch Tee With a Reinforcing Collar Welded to the 8" & 10" Pipe.
Not in ISI Program. (SWP-008-73-RBI-1-3) VT-2, PT
Not in ISI Program. (SWP-008-73-RBI-2-3) VT-2, PT
Exam area includes the inside collar weld RBI-1 and the outside collar weld RBI-2.
Piping shown in Zone 179 Class 3 CUNi
DWG# S&W 12179-CI-SWP-33 SHT.1 of 8

SWP-8
Failure Mode: Cracking - External Loads & Erosion FP 1.0E-08*
6" Pipe to Pipe Bimetallic Weld.
Not in ISI Program. (SWP-006-33-RBI-1-3) VT-2, UT
Exam volume to include 2" of base metal on the CUNi side of the weld for wall thinning.
Piping shown in Zone 175 Class 3 CUNi to Monel
DWG# S&W 12179-CI-SWP-30S SHT.2 of 6

SWP-15
Failure Mode: Cracking - External Loads & Erosion FP 1.0E-08*
1.5" Elbow to Pipe Brazed Joint. Class 3 CUNi
Not in ISI Program. (SWP-150-106-RBI-1-3) VT-2, UT
Exam volume to cover under bell of fitting from pipe side with special UT. Leak concern due to proximity of pump and failure probability for leak w/o ISI is 7.4E-06.
DWG# S&W 12179-CP-319716 SHT.1 of 4

SWP-22
Failure Mode: Erosion FP 1.0E-08*
1.5" Elbow to Pipe Brazed Joint. Class 3 CUNi
Not in ISI Program. (SWP-150-104-RBI-1-3) VT-2, UT
Exam volume to cover under bell of fitting from pipe side with special UT. Leak concern due to proximity of pump and failure probability for leak w/o ISI is 7.4E-06.
DWG# S&W 12179-CP-319735 SHT.1 of 3

SWP-23
Failure Mode: Cracking - Thermal Fatigue & Erosion FP 1.0E-08*
24" Welded Pipe Branch Tee With a Reinforcing Saddle Welded to the 24" & 30" Pipe.
Not in ISI Program. (SWP-024-91-RBI-1-3) VT-2, VT-3, UT
Exam volume to extend 1" from the inside saddle weld on the 24" pipe. This weld will have a UT exam for ID cracking from the 24" pipe side of the weld. Internal VT-3 of ARCOR coating to be performed once per interval.
Piping shown in Zone 183 Class 3 C/S/CUNi Clad
DWG# S&W 12179-CI-SWP-23 SHT.1 of 7

SWP-25
Failure Mode: Cracking - Thermal Fatigue & Erosion FP 1.0E-08*
24" Welded Pipe Branch Tee to 30" Pipe.
Not in ISI Program. (SWP-024-93-RBI-1-3) VT-2, VT-3, UT
Exam volume to extend 1" on each side of weld. Internal VT-3 of ARCOR coating to be performed once per interval.
Piping shown in Zone 183 Class 3 C/S/CUNi Clad
DWG# S&W 12179-CI-SWP-23 SHT.1 of 7

SWP-26
Failure Mode: Cracking - Vibration Fatigue & Erosion FP 2.6E-08
No piping exists in this segment only equipment that is flanged and bolted together.
Service Water Pump P1D to Check Valve V1.
(SWP-030-D-26-3) VT-2
DWG# P&ID 25212-26933 SH.1 of 4 or S&W 12179-EM-133A-16

SWP-27
Failure Mode: Cracking - Vibration Fatigue & Erosion FP 2.6E-08
No piping exists in this segment only equipment that is flanged and bolted together.
Service Water Pump P1B to Check Valve V3.
(SWP-030-B-27-3) VT-2
DWG# P&ID 25212-26933 SH.1 of 4 or S&W 12179-EM-133A-16

SWP-28
Failure Mode: Cracking - Vibration Fatigue & Erosion FP 2.6E-08
No piping exists in this segment only equipment that is flanged and bolted together.
Service Water Pump P1C to Check Valve V5.
(SWP-030-C-28-3) VT-2
DWG# P&ID 25212-26933 SH.1 of 4 or S&W 12179-EM-133A-16

SWP-29
Failure Mode: Cracking - Vibration Fatigue & Erosion FP 2.6E-08
No piping exists in this segment only equipment that is flanged and bolted together.
Service Water Pump P1A to Check Valve V7.
(SWP-030-A-29-3) VT-2
DWG# P&ID 25212-26933 SH.1 of 4 or S&W 12179-EM-133A-16

REACTOR PLANT COMPONENT COOLING : CCP-1
INSPECTION LOCATIONS

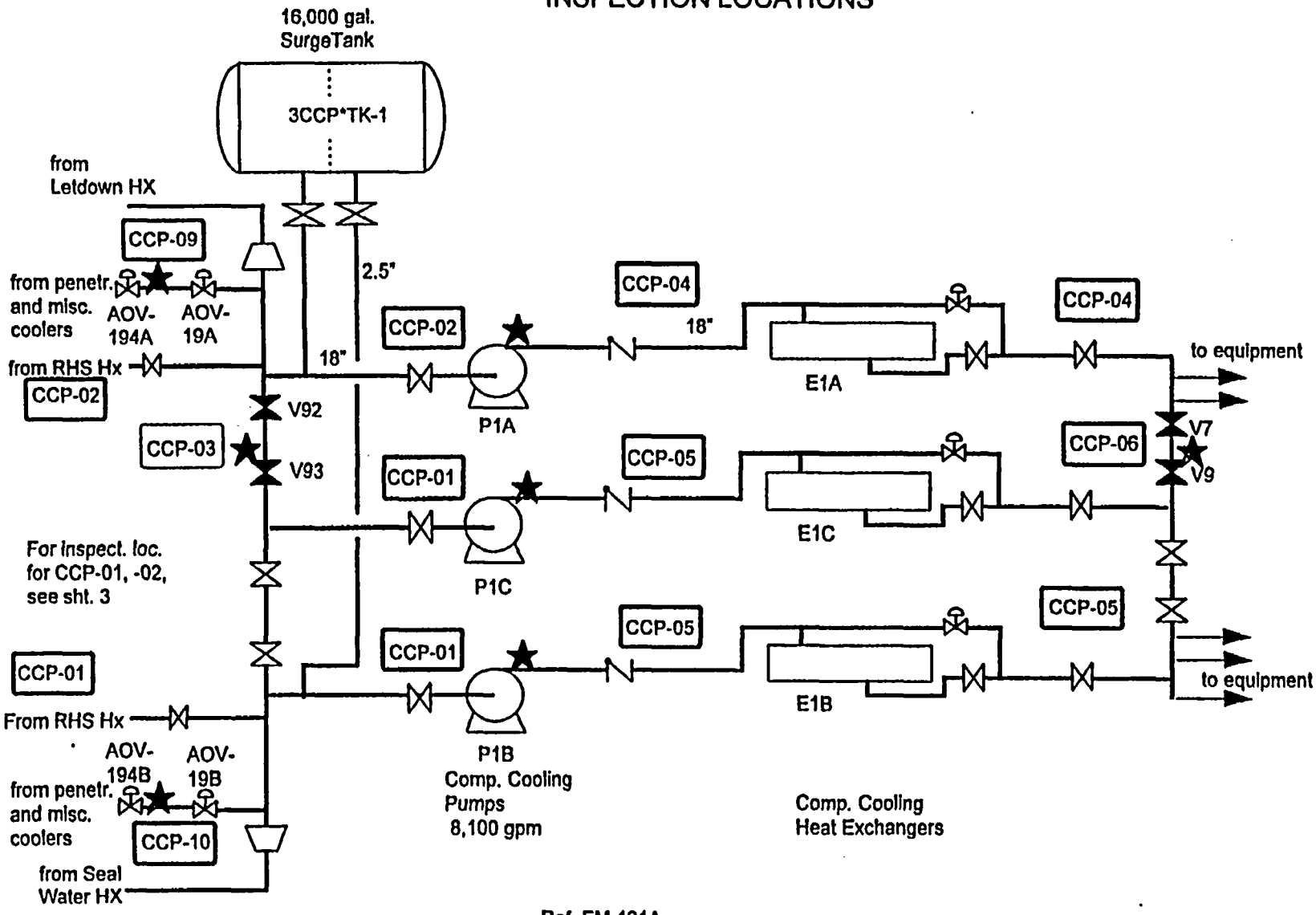

3/27/96

Ref. EM-121A

RBI P&ID - 30

REACTOR PLANT COMPONENT COOLING : CCP-2
INSPECTION LOCATIONS

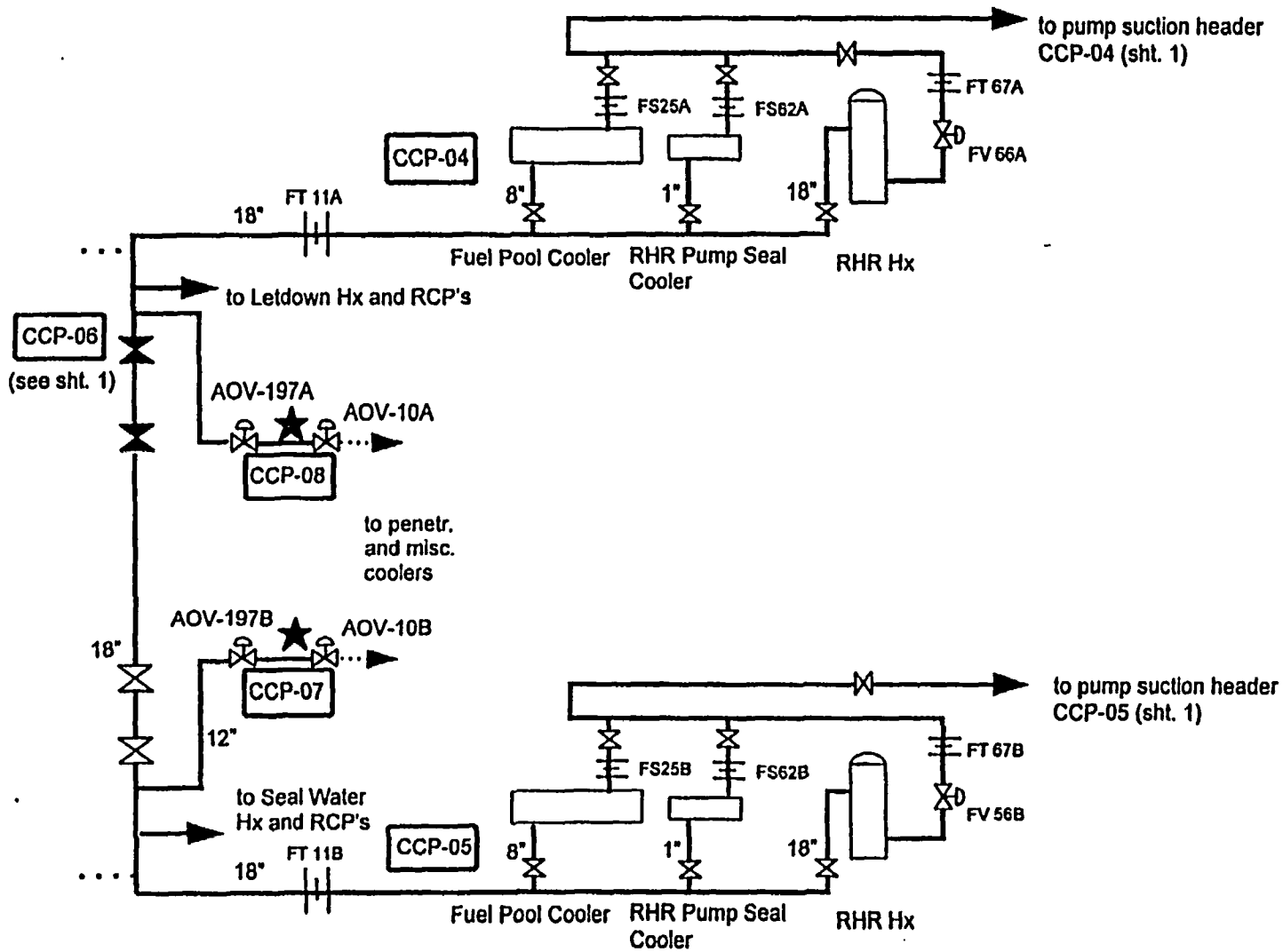

Ref. EM-121A

REACTOR PLANT COMPONENT COOLING : CCP-3
INSPECTION LOCATIONS

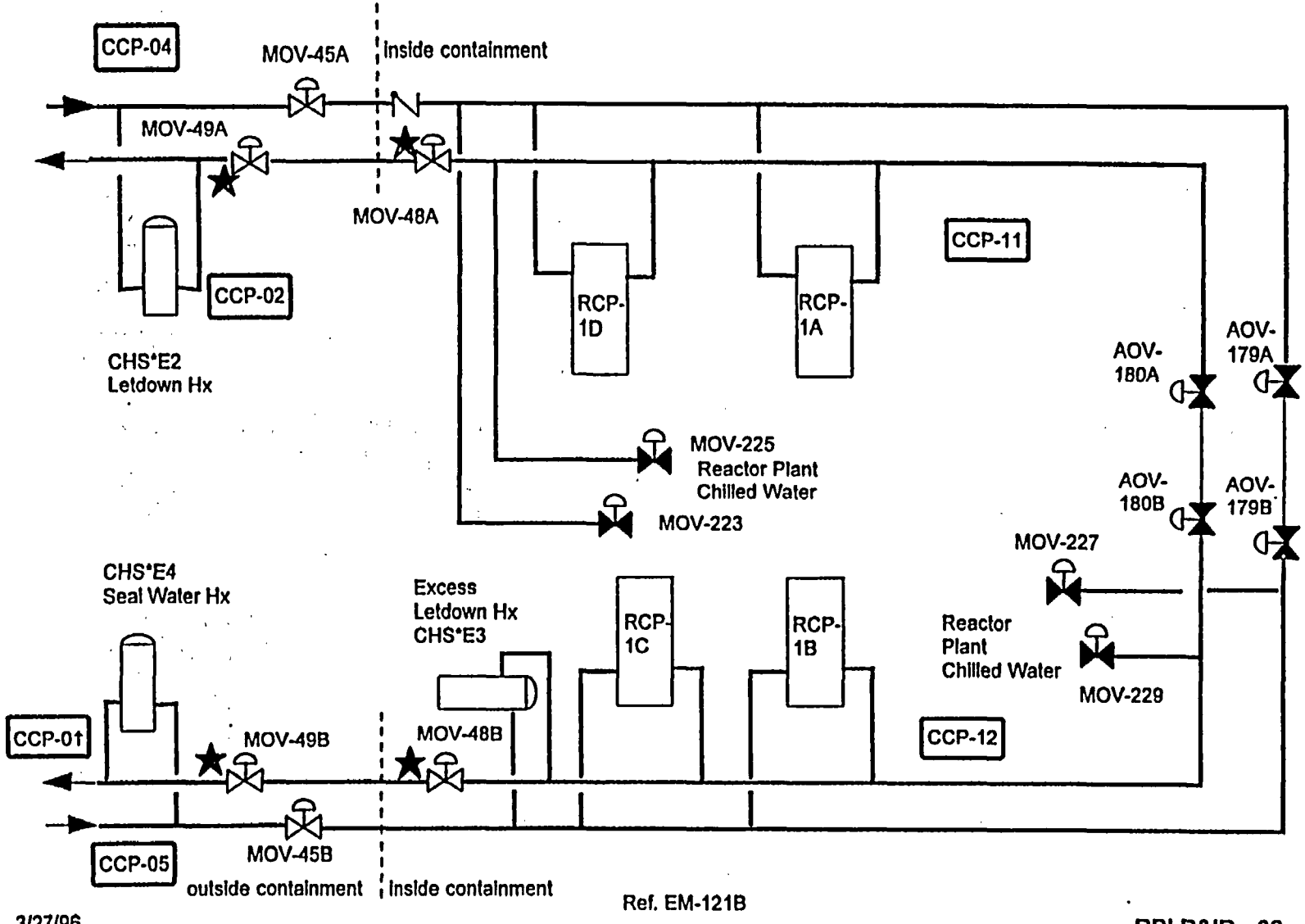

3/27/96

RBI P&ID - 32

CHEMICAL AND VOLUME CONTROL : CHS-1
INSPECTION LOCATIONS

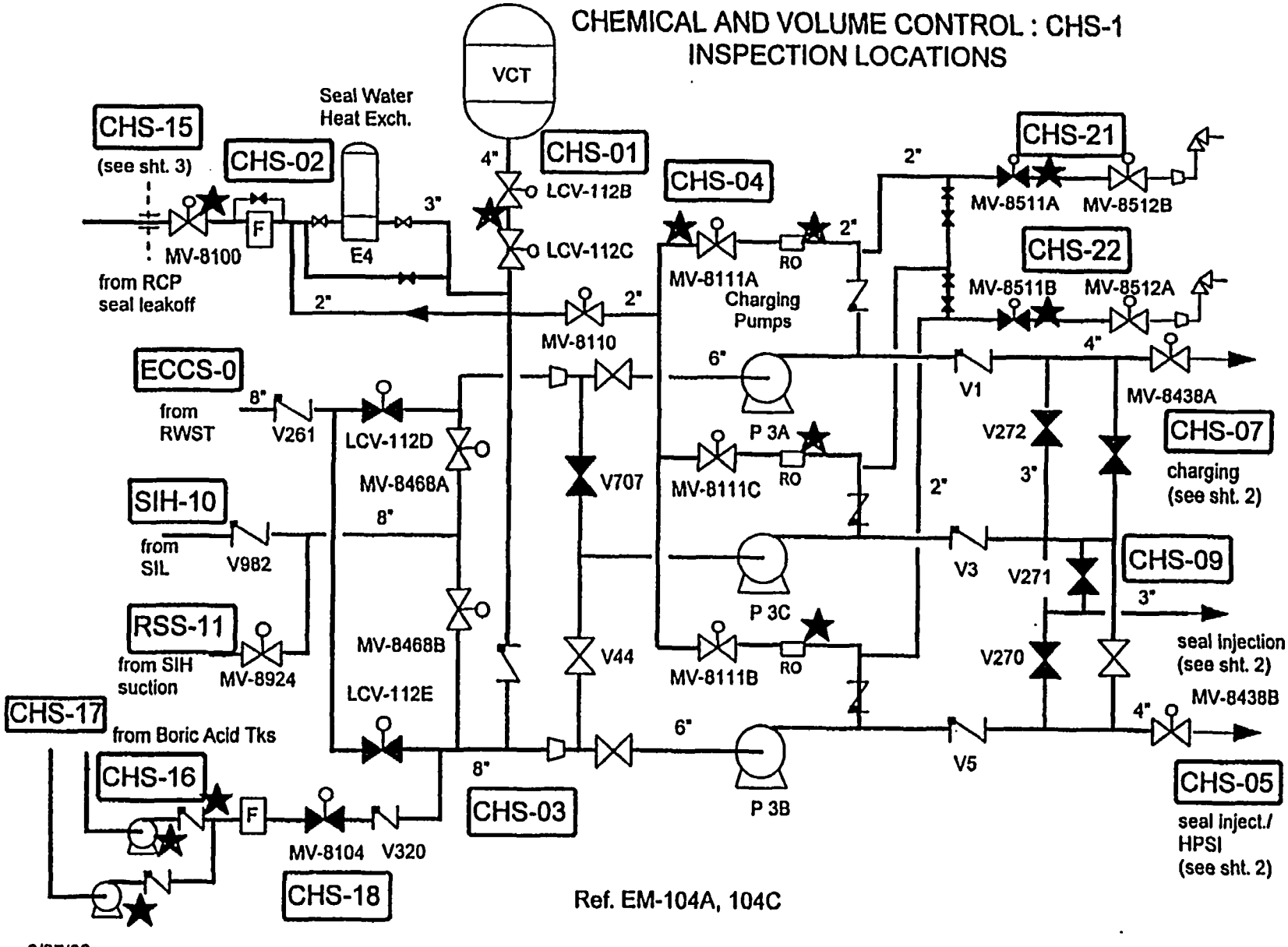

3/27/96

RBI P&ID - 21

CHEMICAL AND VOLUME CONTROL : CHS-2
INSPECTION LOCATIONS

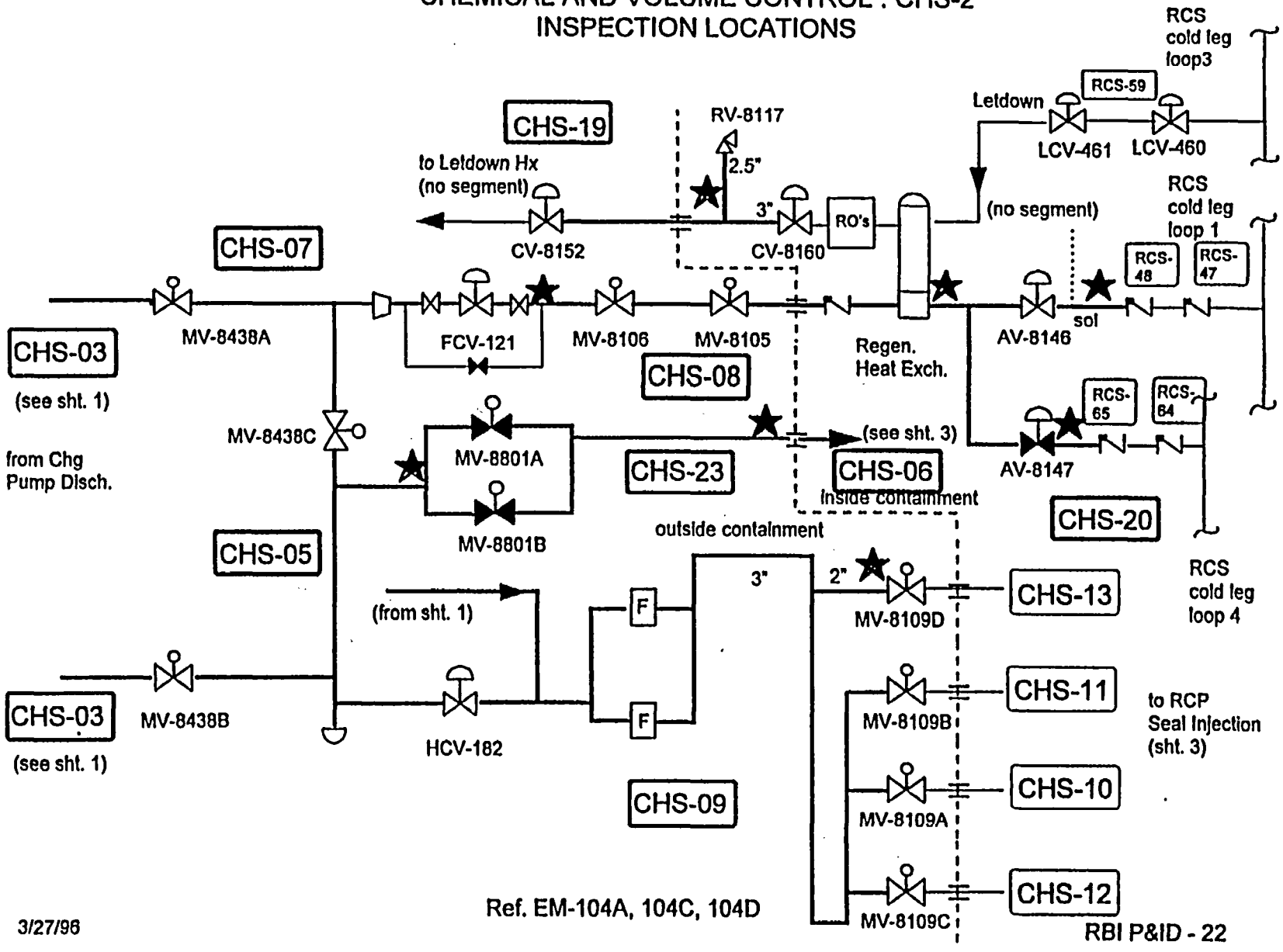

CHEMICAL AND VOLUME CONTROL : CHS-3
INSPECTION LOCATIONS

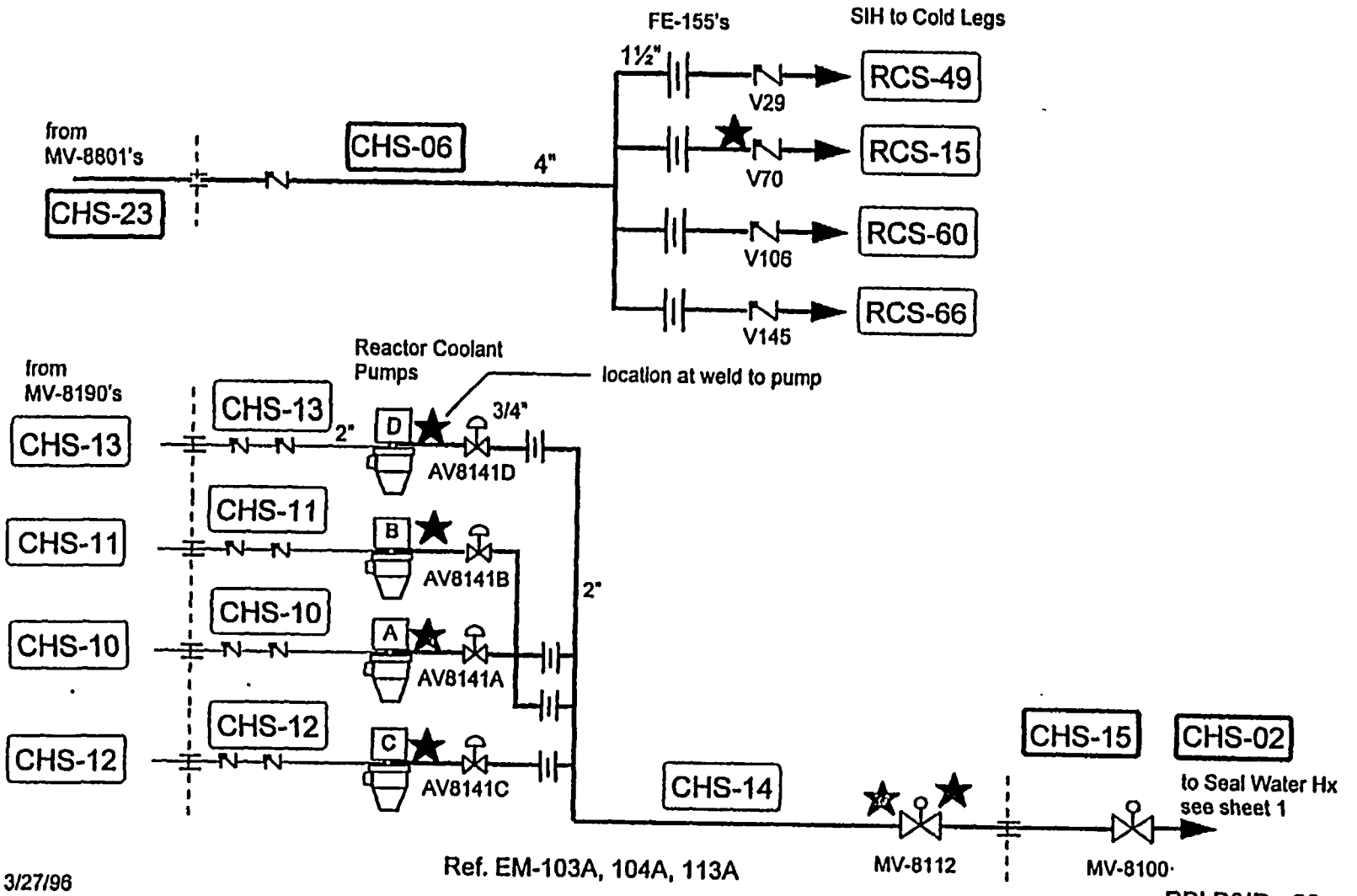

Ref. EM-103A, 104A, 113A

3/27/96

RBI P&ID - 23

EMERGENCY CORE COOLING : ECCS-1
INSPECTION LOCATIONS

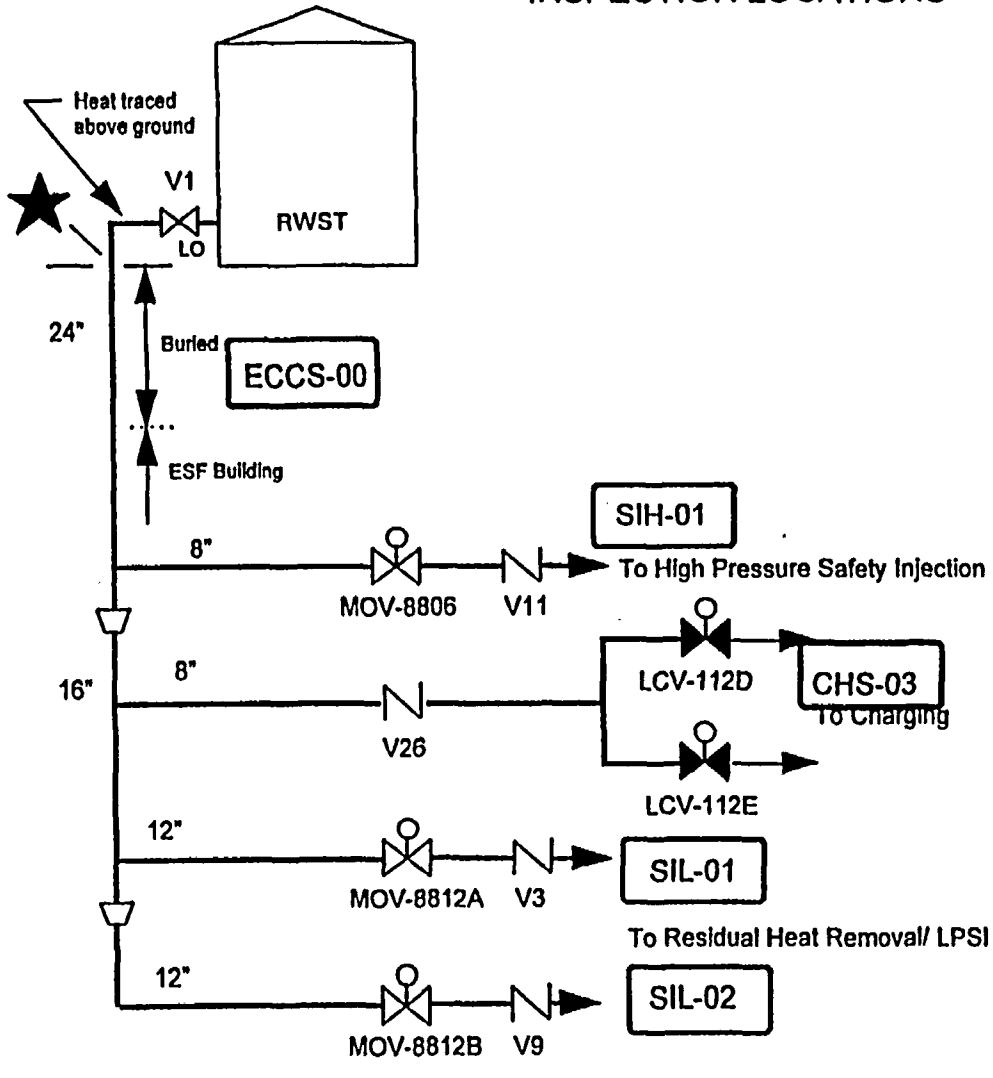

Ref. EM-112A, 113A, 113B, 104A

AUX FEEDWATER : FWA-1
INSPECTION LOCATIONS

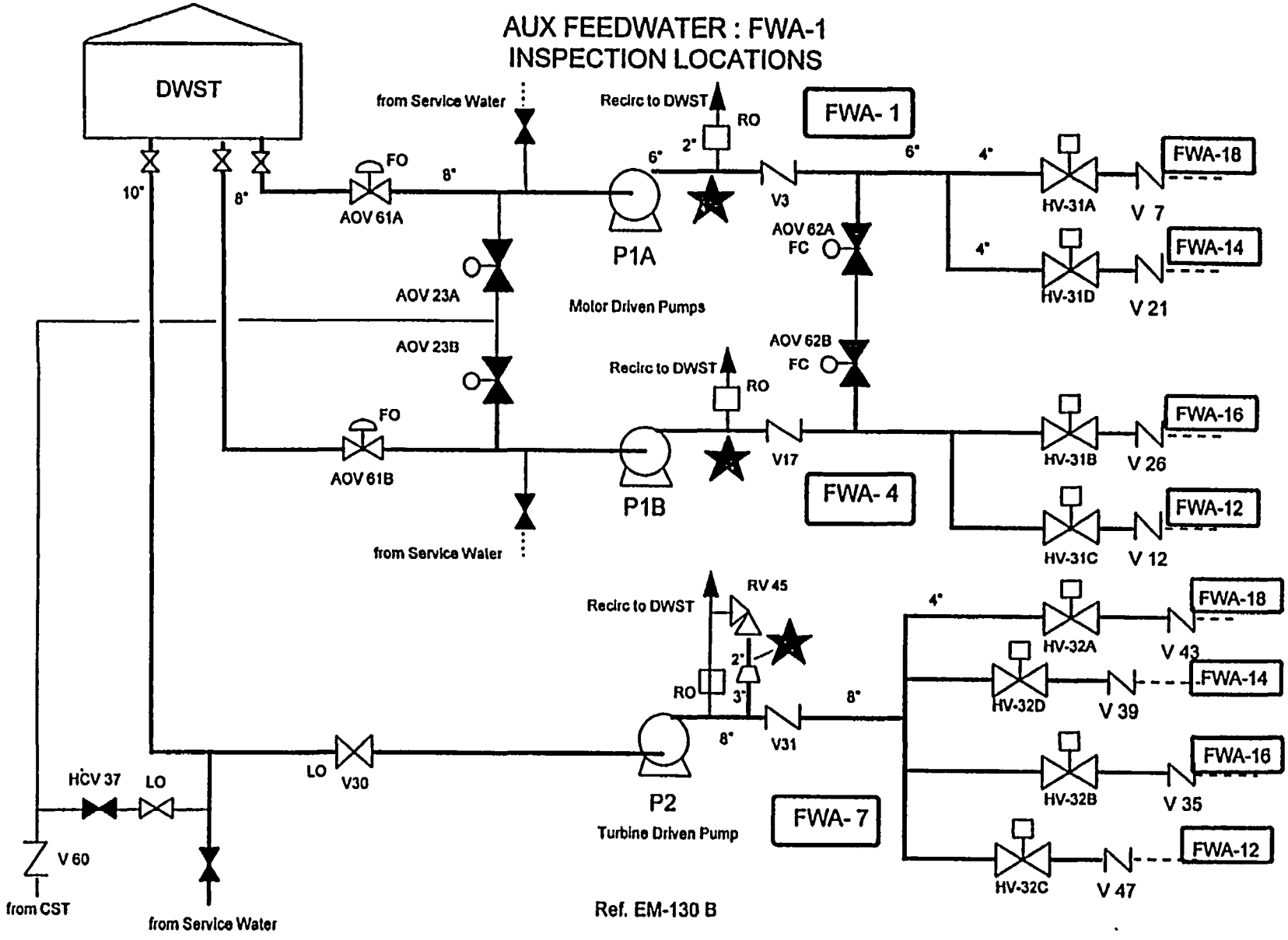

Ref. EM-130 B

3/27/96

RBI P&ID - 9

AUX FEEDWATER : FWA-2
INSPECTION LOCATIONS

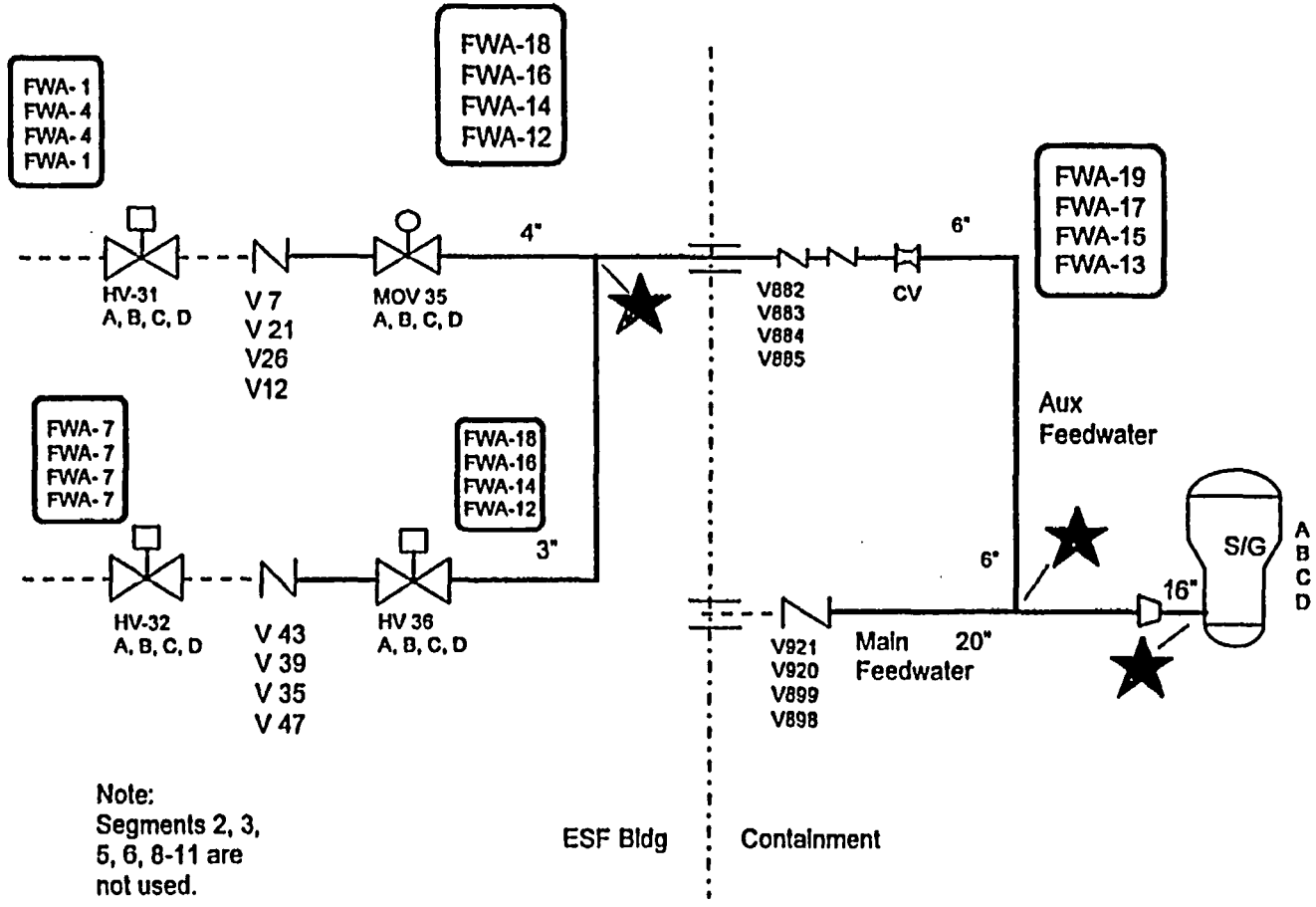

Note:
Segments 2, 3, 5, 6, 8-11 are not used.

Ref. EM-130 A, B, C, D

AUX FEEDWATER : FWA-3
INSPECTION LOCATIONS

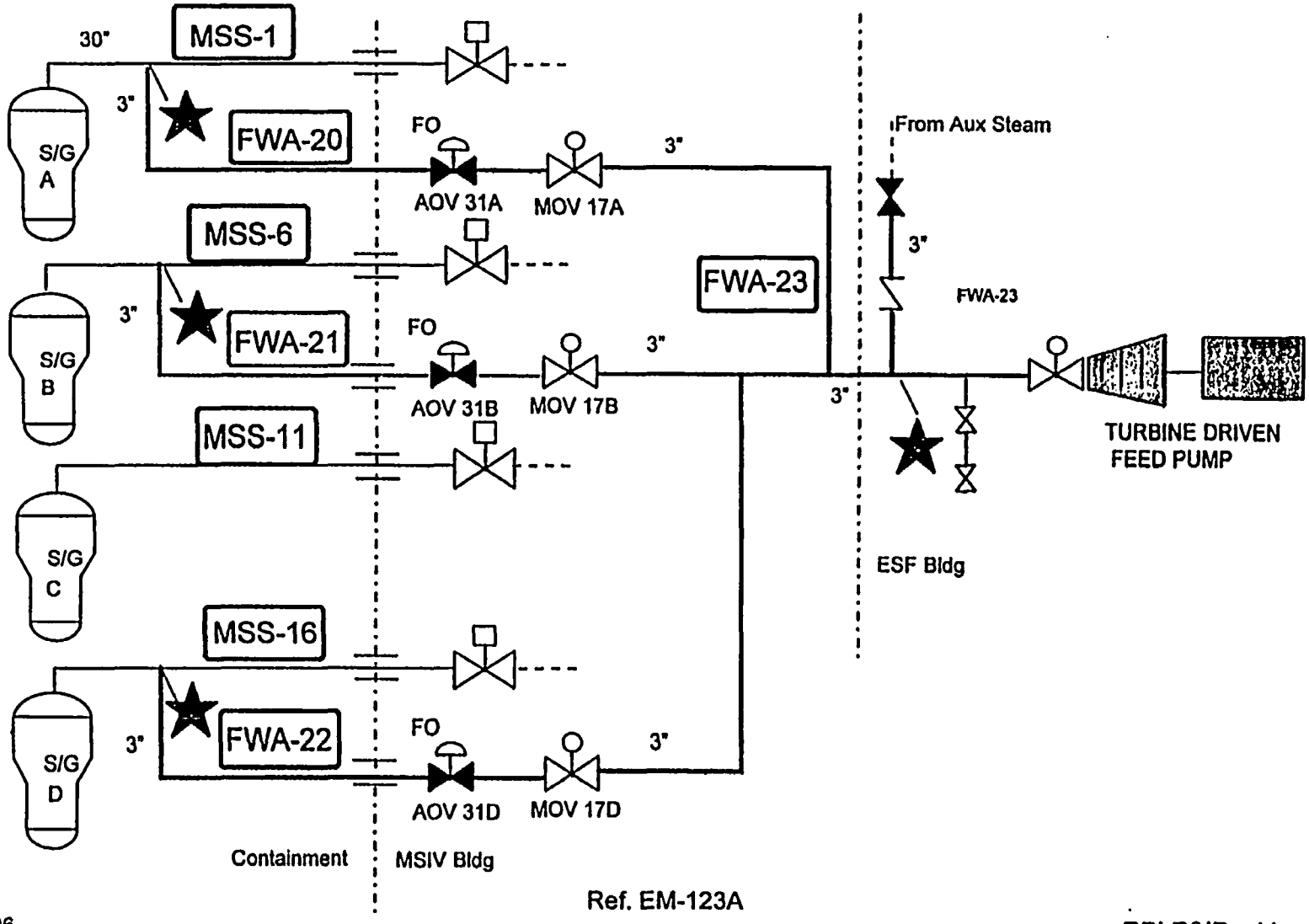

Ref. EM-123A

3/27/96

RBI P&ID - 11

QUENCH SPRAY : QSS-1
INSPECTION LOCATIONS

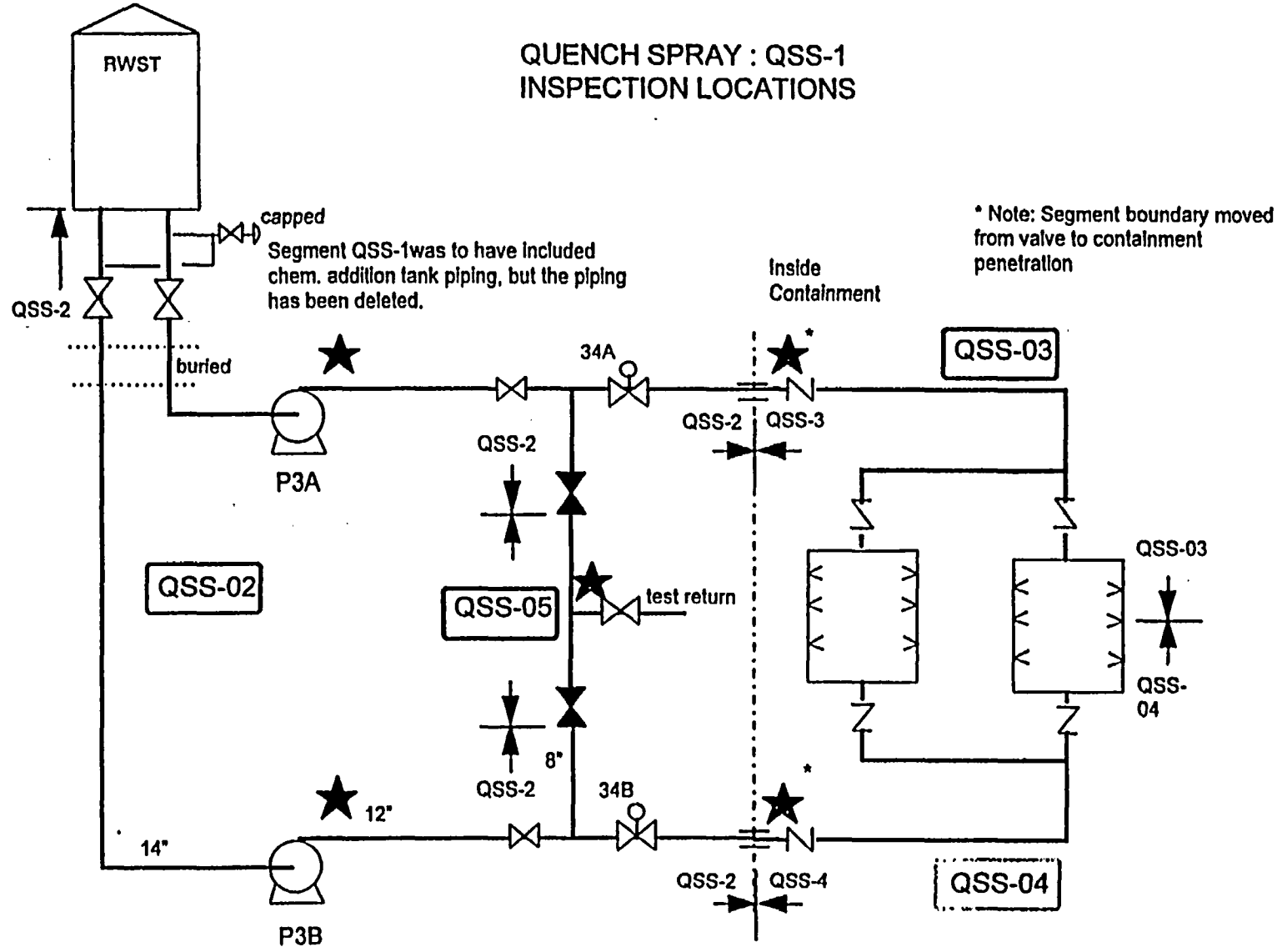

Quench Spray System Ref. EM-115A

3/27/96

RBI P&ID - 12

o:\4393\VersionA\4393-E1a.doc1b-022099-11

REACTOR COOLANT SYSTEM : RCS-1
INSPECTION LOCATIONS

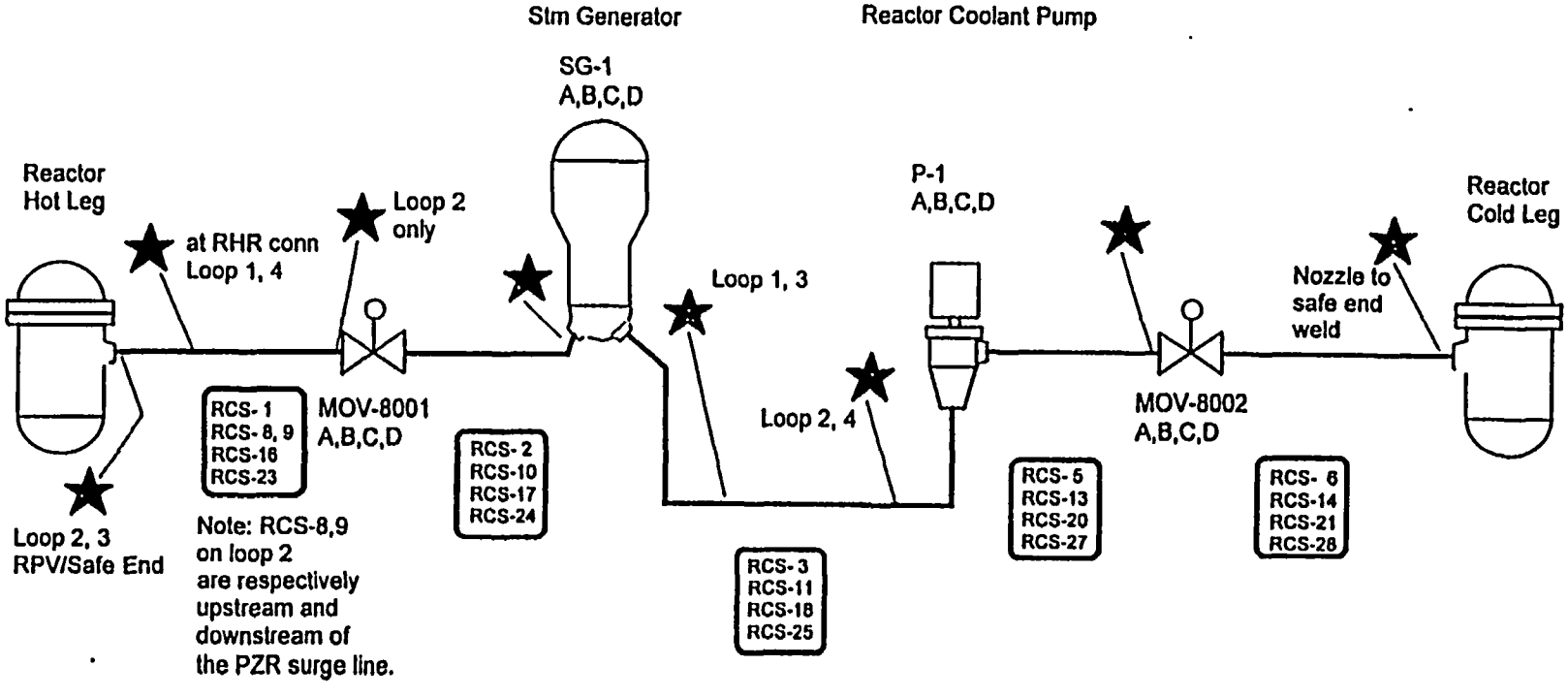

Ref. EM-102A, 102B, 102D, 102E

3/27/96

REACTOR COOLANT SYSTEM : RCS-2
INSPECTION LOCATIONS

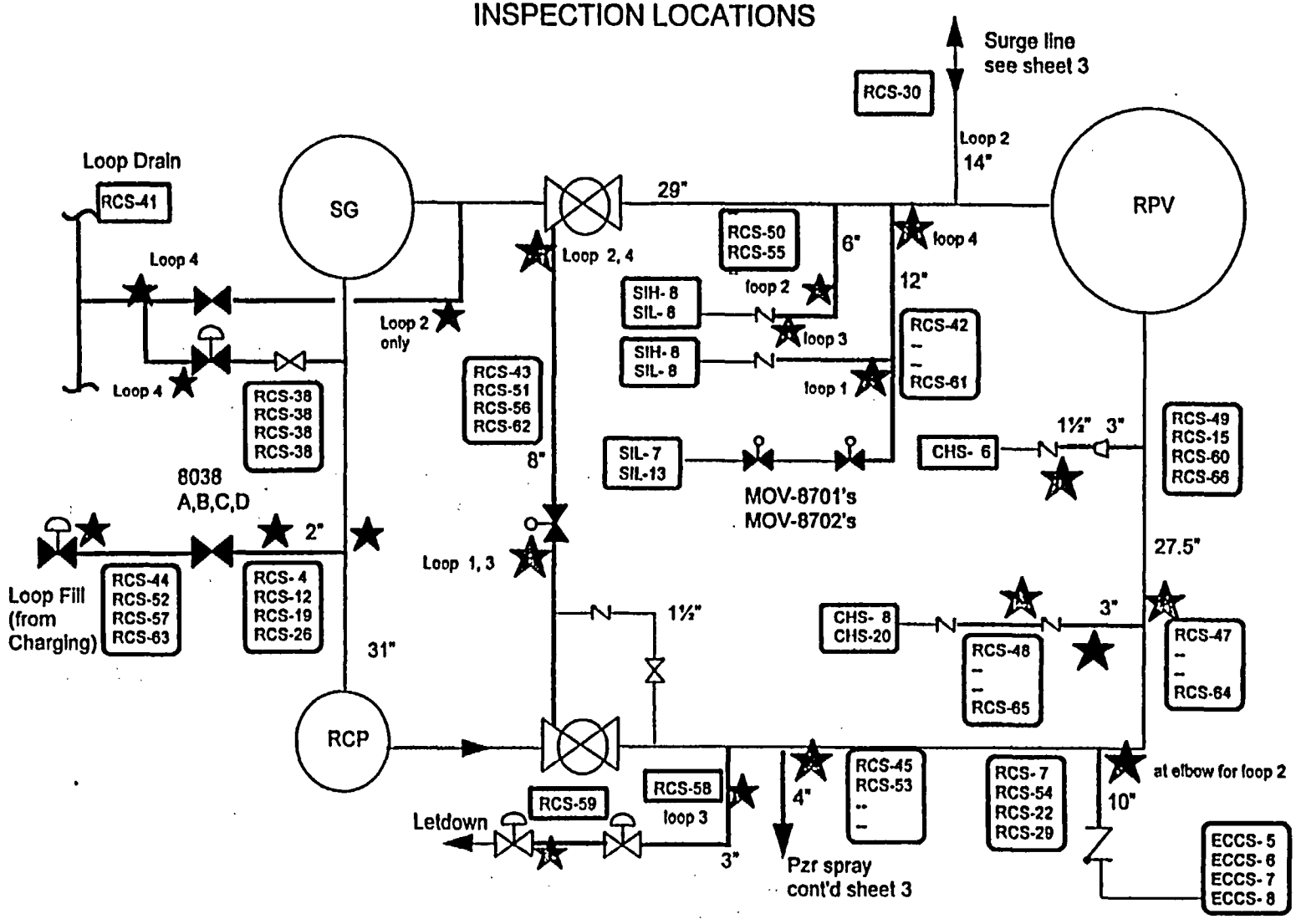

Ref. EM-102A, 102B, 102E, 102F

3/27/96

REACTOR COOLANT SYSTEM : RCS-3
INSPECTION LOCATIONS

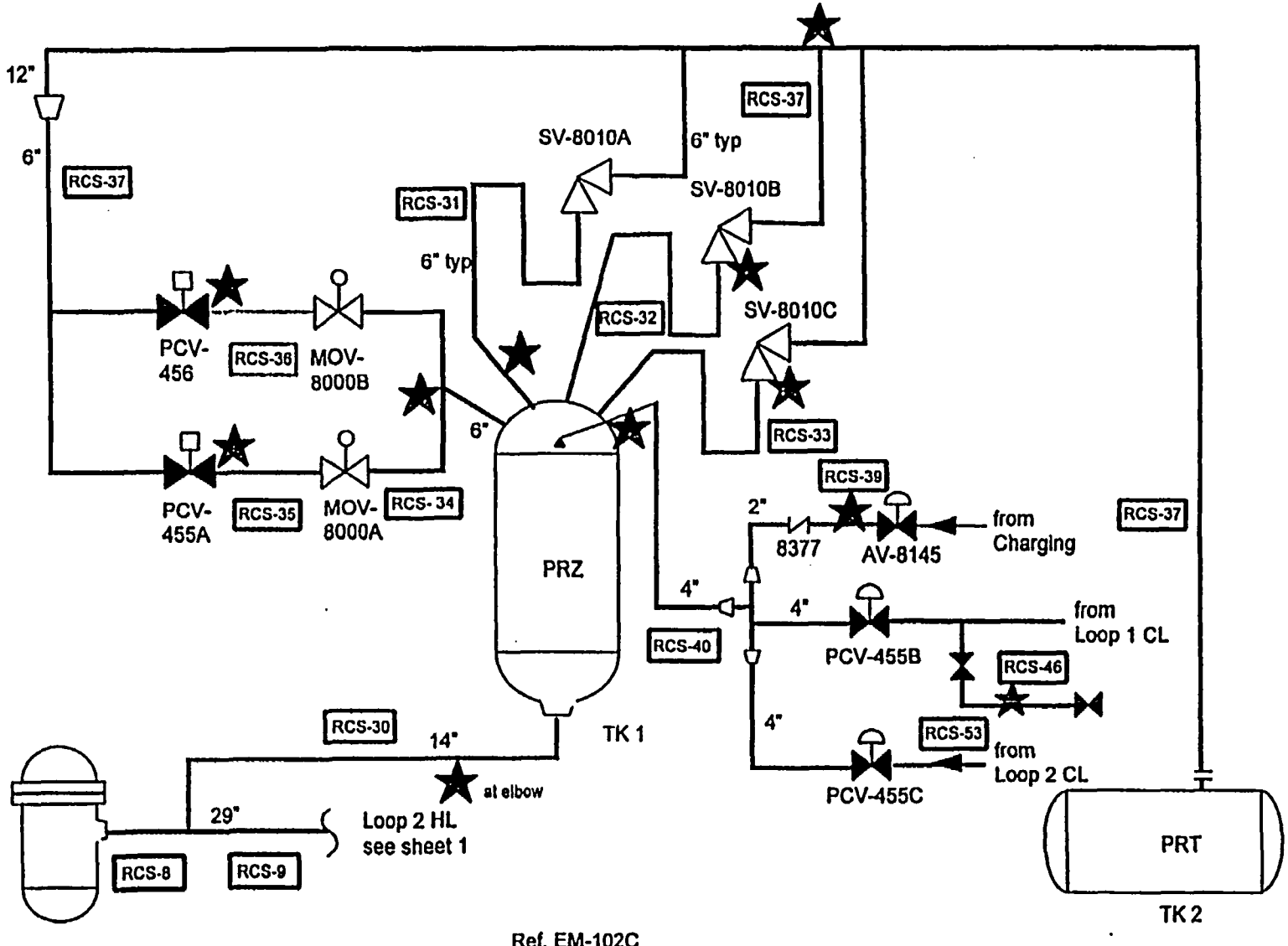

Ref. EM-102C

3/27/96

RBI P&ID - 26

RECIRCULATION SPRAY : RSS-1
INSPECTION LOCATIONS

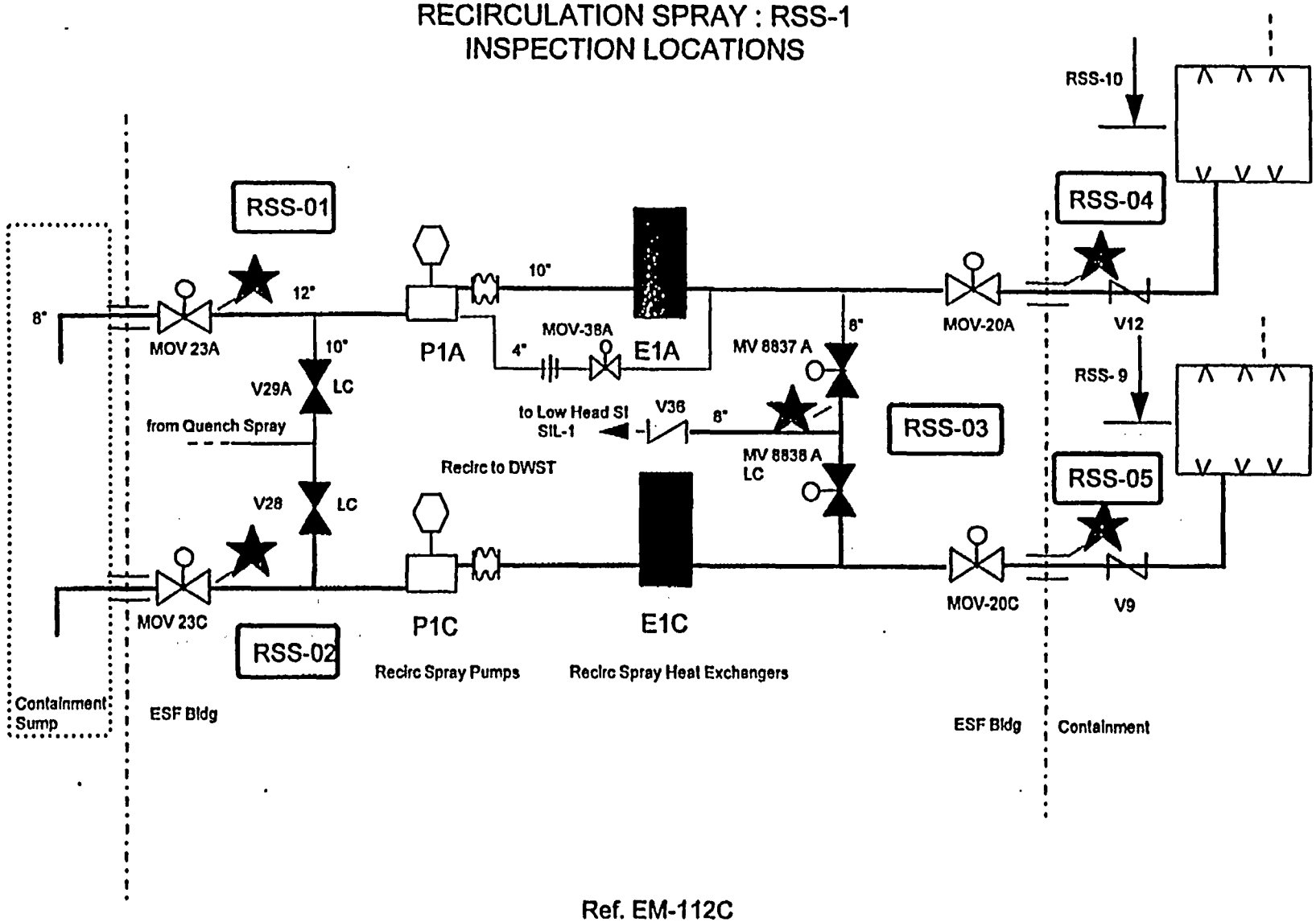

Ref. EM-112C

RECIRCULATION SPRAY : RSS-2
INSPECTION LOCATIONS

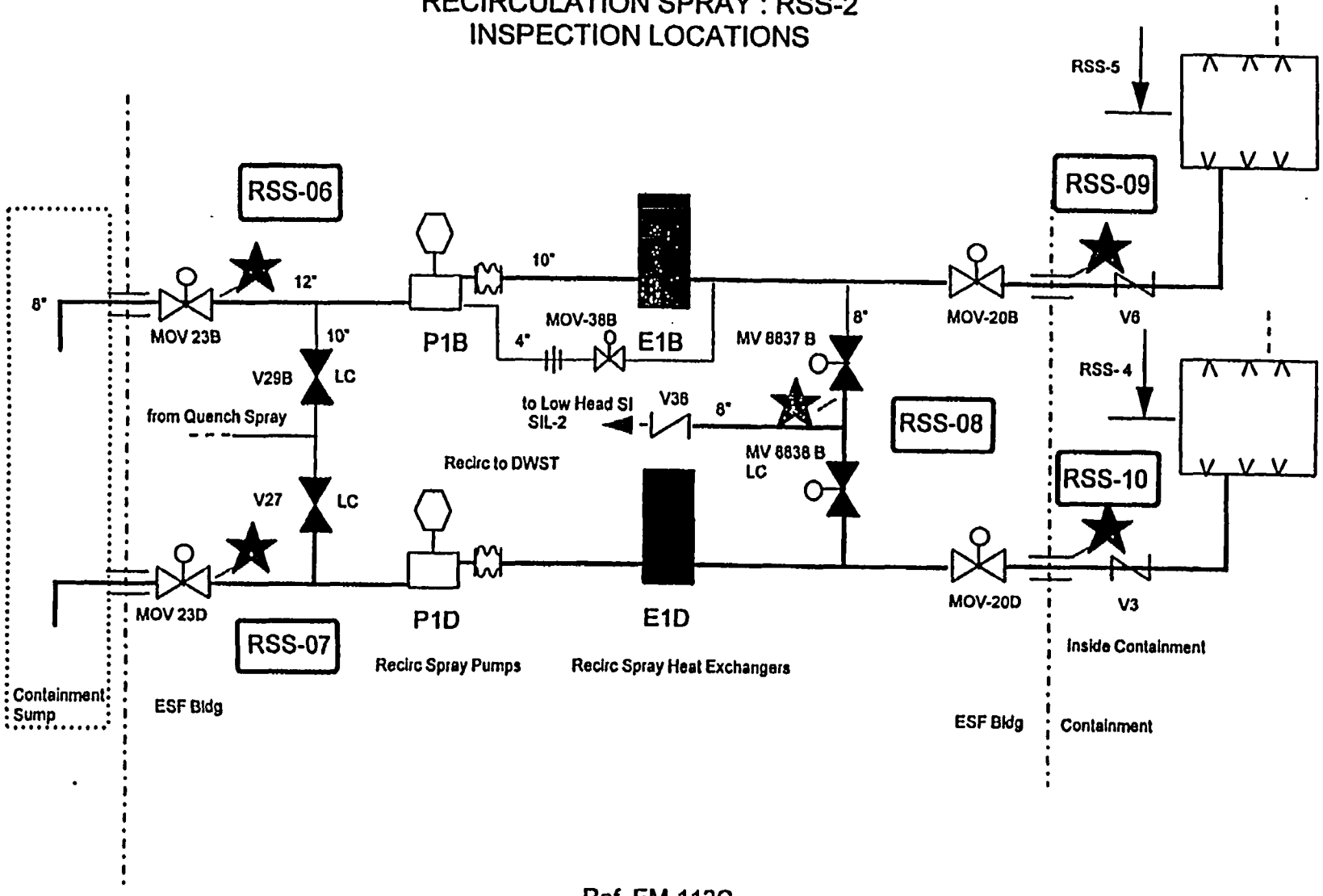

Ref. EM-112C

3/27/96

RBI P&ID - 16

RECIRCULATION SPRAY : RSS-3
INSPECTION LOCATIONS

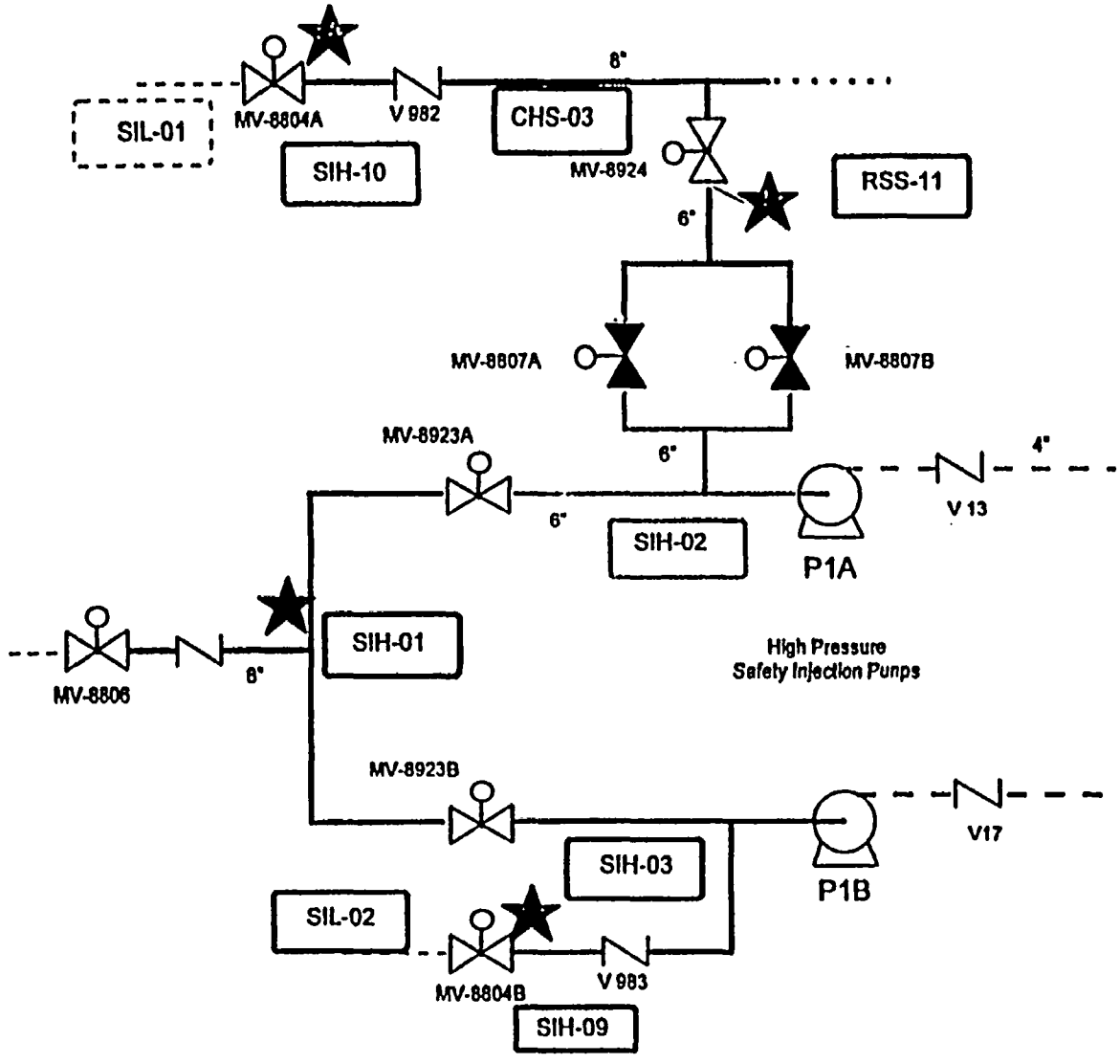

3/27/96

Ref. EM-113B

RBI P&ID - 17

HIGH PRESSURE SAFETY INJECTION SYSTEM : SIH-1
INSPECTION LOCATIONS

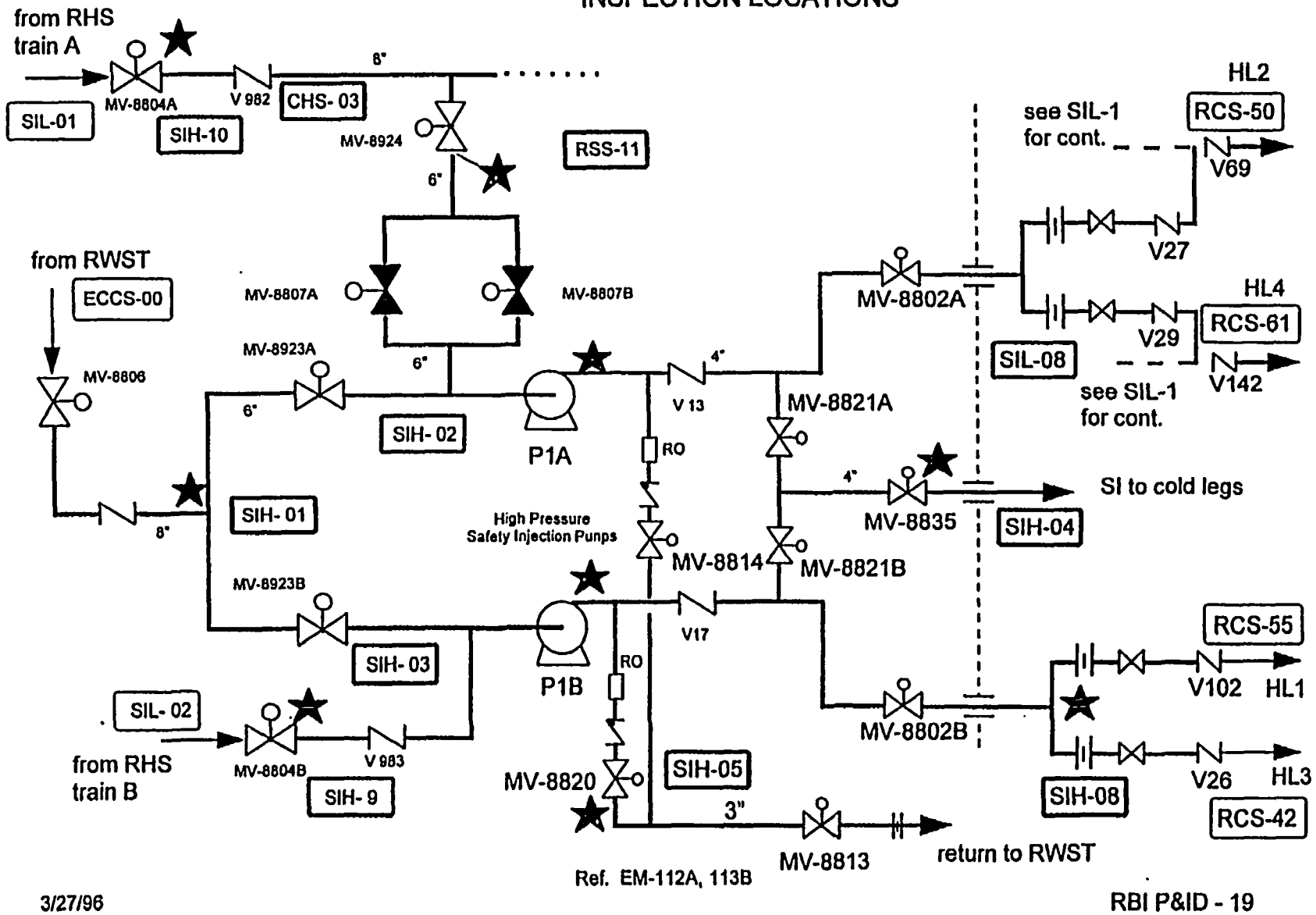

3/27/96

RBI P&ID - 19

HIGH PRESSURE SAFETY INJECTION SYSTEM : SIH-2
INSPECTION LOCATIONS
(CCI SUBSYSTEM)

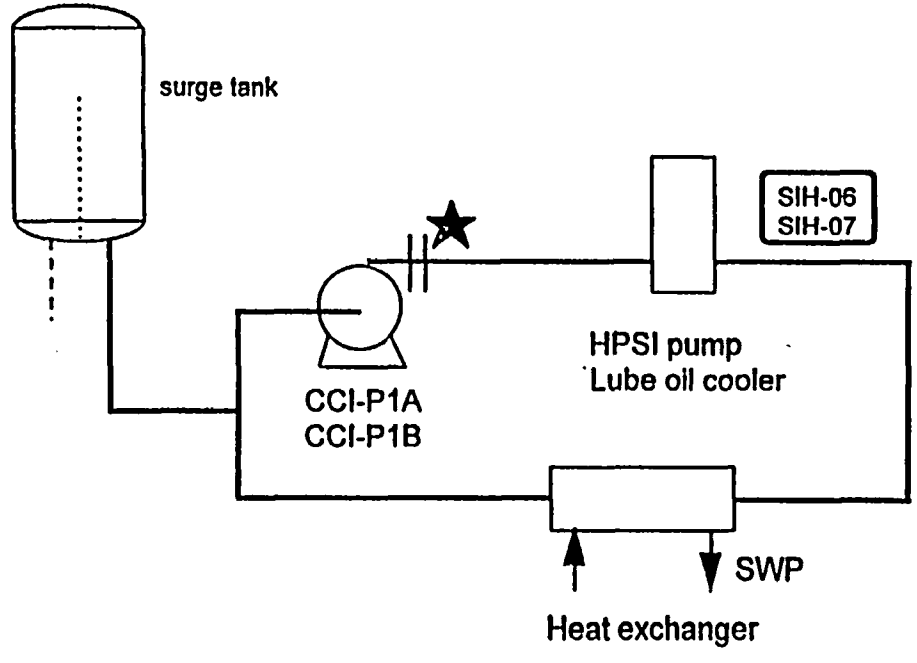

LOW PRESSURE SAFETY INJECTION : SIL-1
INSPECTION LOCATIONS

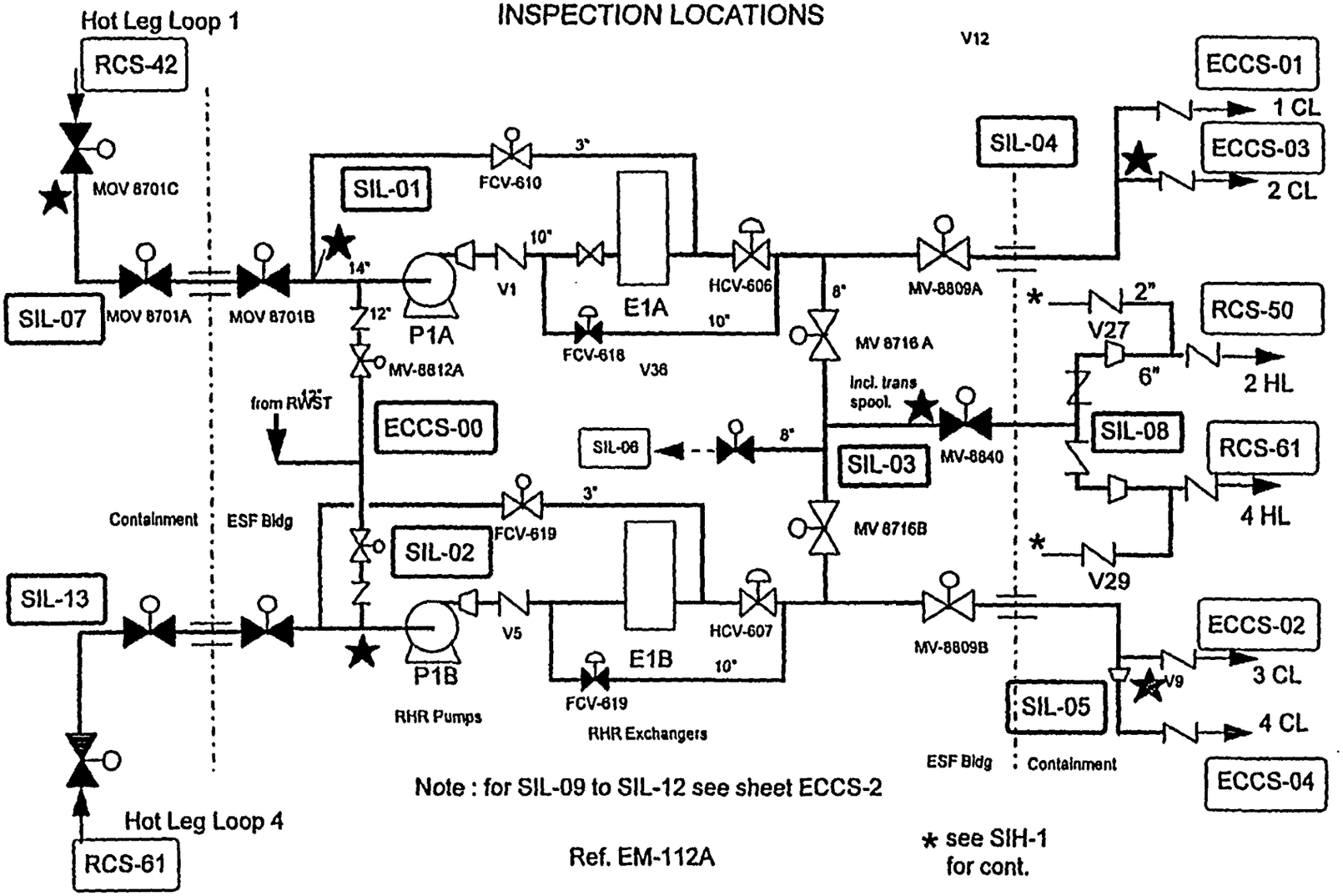

3/27/96

RBI P&ID - 18

o:\4393\VersionA\4393-E1b.doc1b-022099-9

SERVICE WATER SYSTEM : SWP-1
INSPECTION LOCATIONS

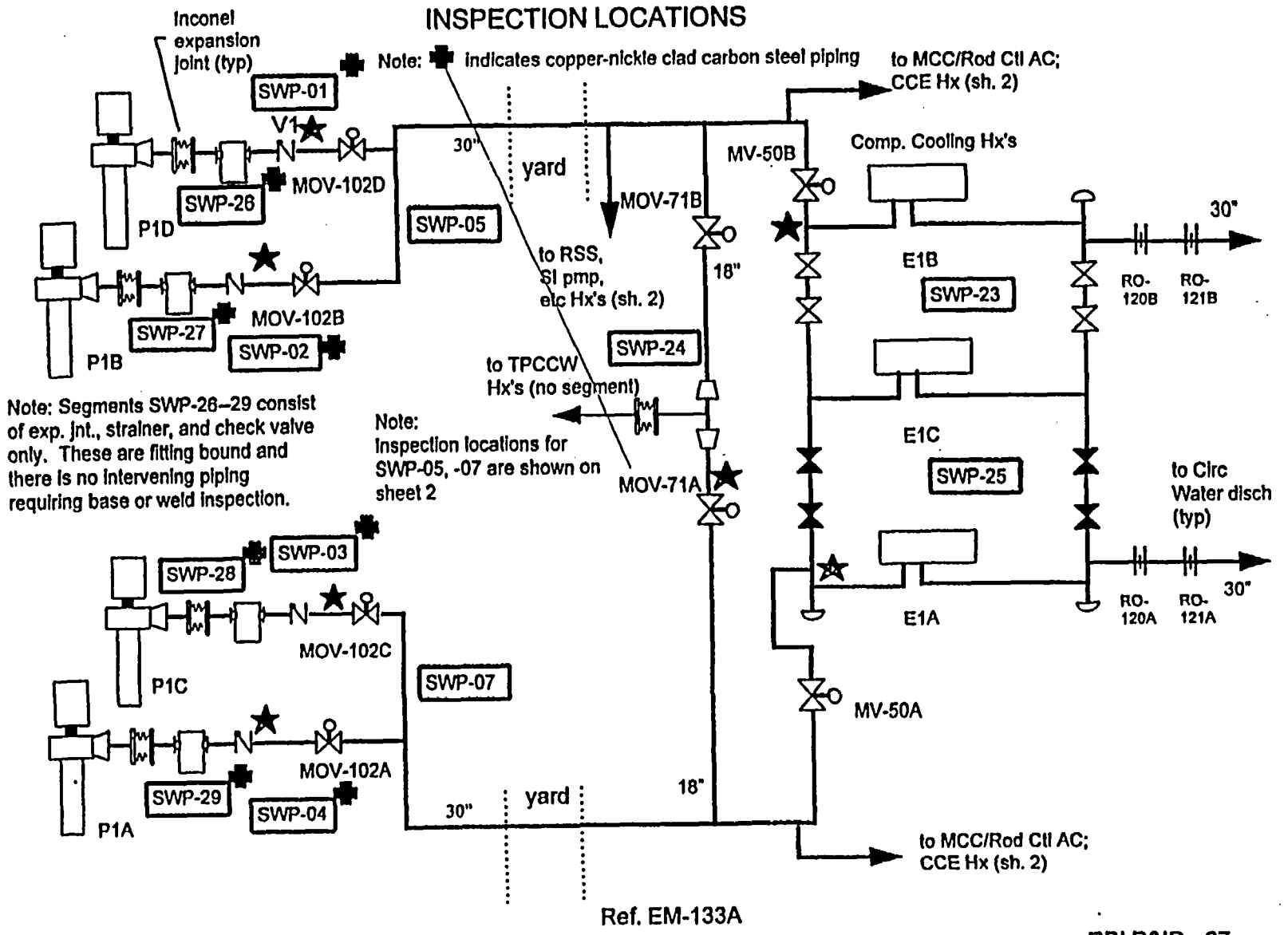

3/27/96

RBI P&ID - 27

c:\4393\VersionA\4393-E1b.doc:1b-022099-10

SERVICE WATER SYSTEM : SWP-2
INSPECTION LOCATIONS

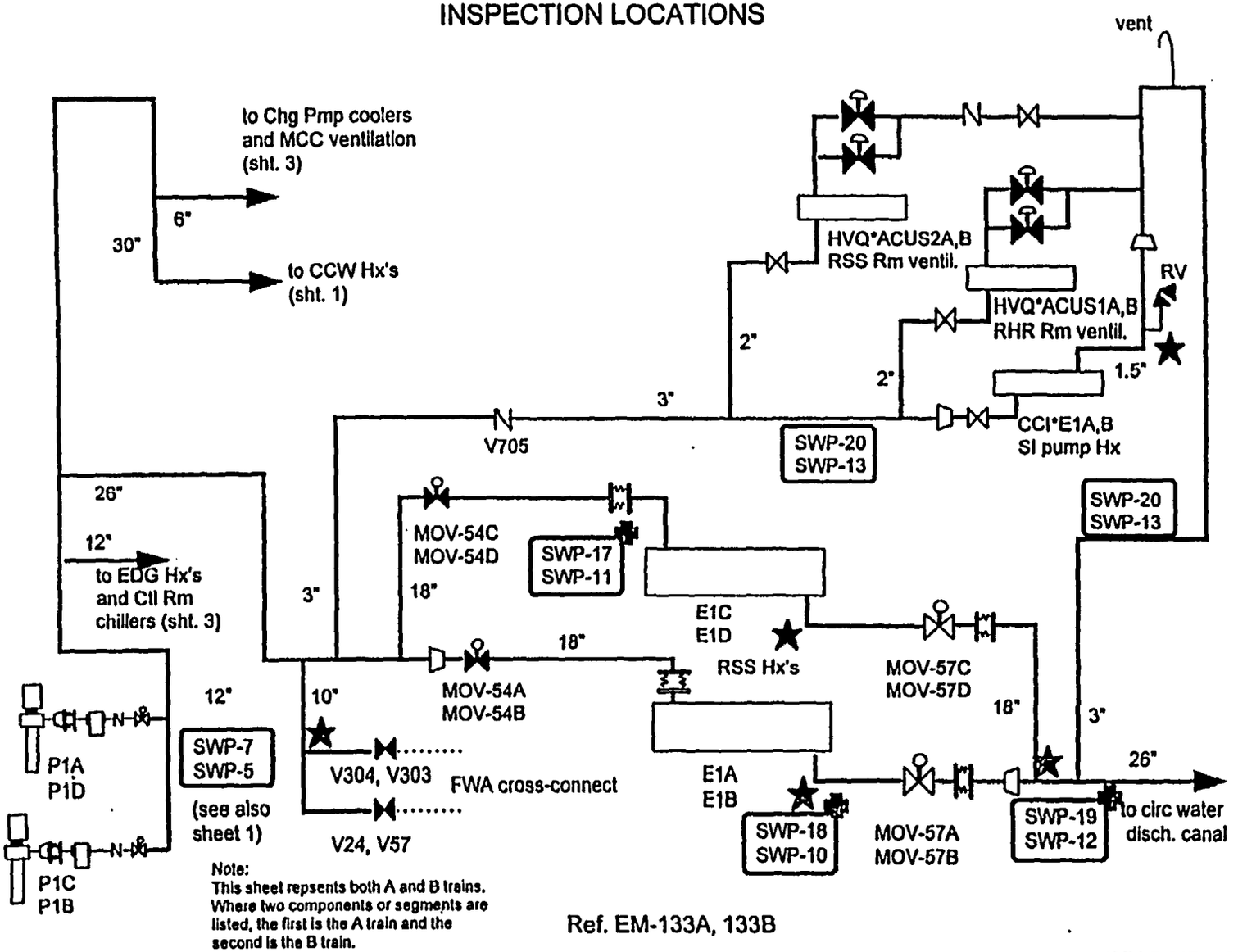

Note:
This sheet repsents both A and B trains.
Where two components or segments are listed, the first is the A train and the second is the B train.

Ref. EM-133A, 133B

3/27/96

RBI P&ID - 28

SERVICE WATER SYSTEM : SWP-3
INSPECTION LOCATIONS

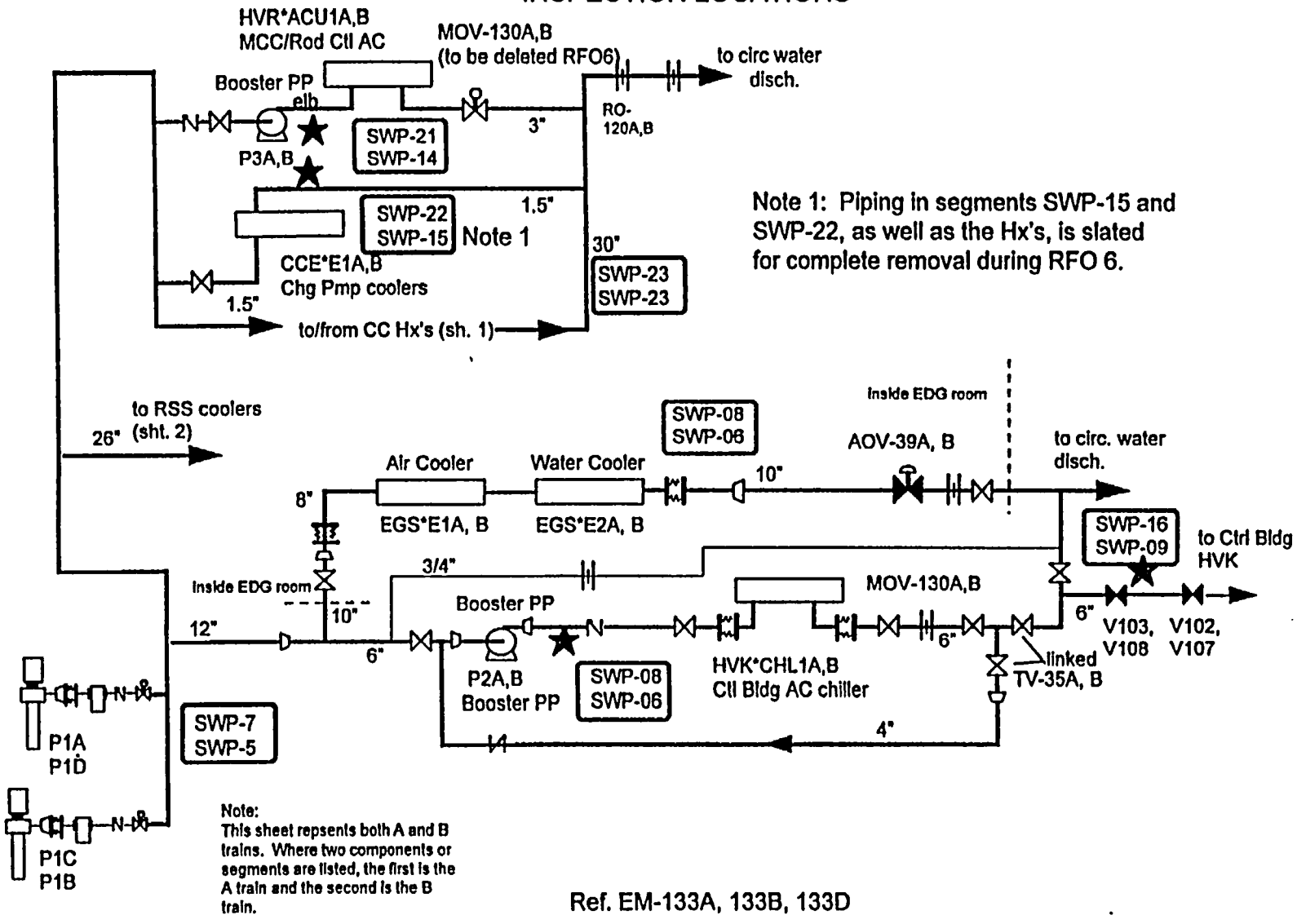

Note:
This sheet repsents both A and B trains. Where two components or segments are listed, the first is the A train and the second is the B train.

Ref. EM-133A, 133B, 133D

3/27/96

RBI P&ID - 29

ENCLOSURE 2

MILLSTONE UNIT 3

CHECKLIST FOR TECHNICAL CONSISTENCY IN PSA MODEL

(BASED ON EPRI PSA APPLICATIONS GUIDE APPENDIX B)

ISI PROGRAM PLAN

Checklist For Technical Consistency in a PSA Model

Appendix B of the EPRI document entitled "PSA Applications Guide" discusses several issues that have been found, in various PSAs, to be significant in determining the risk profile, but that have also either been neglected or treated superficially in the PSA models. The PSA report classifies the issues of concern in three major categories:

1. Issues related to whether the values of the PSA model parameters are within nominal ranges.

2. Issues concerned with whether the PSA model assumptions are justifiable.

3. Issues dealing with the proper documentation that support modeling decisions.

The following table provides a sanity check to confirm that the Millstone Unit 3 PSA model conforms to the industry state-of-the-art with respect to completeness of coverage of potential scenarios.

Issue [EPRI PSA Applications Guide, Appendix B]	Issues Description [EPRI PSA Applications Guide, Appendix B]	Related Millstone Unit 3 (MP3) PSA Model Assumptions
I. <u>Initiating Events</u>	1. If the Support Systems (such as CCW, SW, AC Power, DC Power, HVAC, and Instrument/Station Air) have not been identified as being significant, they should have screened out on the basis of one of the following reasons: 1.1 Not causing a reactor trip. 1.2 Not required for shutdown.	1. The following initiating events are considered in the Millstone Unit 3 PSA model: Loss of service water (train A or B), total loss of service water, loss of one vital DC Bus (A or B), total loss of vital DC Power, loss of vital AC Bus 1 or 2, loss of vital AC Bus 3 or 4.

Issue [EPRI PSA Applications Guide, Appendix B]	Issues Description [EPRI PSA Applications Guide, Appendix B]	Related Millstone Unit 3 (MP3) PSA Model Assumptions
	1.3 The frequencies of loss of these support systems (as initiating events) are low. A critical review is required if the frequency is < 10^{-2}/RY for a single train system, or 10^{-4}/RY for a redundant system. However, if such frequency is bounded in probability and consequence by another initiator, it could be screened out.	The following initiating events are screened out (not modeled in MP3 PSA): Loss of Instrument Air, loss of Reactor Plant CCW, loss of Turbine Plant CCW, loss of charging pump and component cooling pump area ventilation. The reasons for screening out these support systems (special initiating events) are documented in MP3 Event Tree Analysis Calculation File # W3-517-1084-RE, Rev. 0, Pages 5 and 6.
	2. While Interfacing System LOCAs may have low frequencies, they are risk significant from the stand point of public risk irrespective to their frequencies of such sequences are assessed to be low, then these calculations must be well documented in the PSA.	2. In the Millstone Unit 3 PSA, Interfacing System LOCAs were assumed to lead directly to core melt and containment bypass, and, therefore, required no event tree analysis. The initiating event frequency of IS LOCAs is 2.21E-7/RY.

Issue [EPRI PSA Applications Guide, Appendix B]	Issues Description [EPRI PSA Applications Guide, Appendix B]	Related Millstone Unit 3 (MP3) PSA Model Assumptions
	3. SGTR sequences are also risk significant from the public risk stand point. If the frequencies of SGTR events are assessed to be low, then the supporting calculations have to be well documented.	3. The initiating event frequency of SGTR is 2.84E-2/RY and this event is considered a risk significant from a public risk stand point.
II. <u>Event Sequence Development</u>	1. Transient-Induced LOCAs such as a stuck-open PORV and RCP Seal LOCA after a loss of offsite power (or loss of seal cooling) are important sequences and should be properly addressed in the PSA event sequence development.	1. Millstone Unit 3 PSA models the following consequential failures: 1.1 Consequential Small LOCA due to a pressurizer PORV being challenged and failing to reset resulting in a small LOCA 1.2 Systems responsible for maintaining RCP seal cooling fail leading to a seal LOCA 1.3 A secondary side relief or safety valve is opened and fails to reset (i.e., a steamline break).
	2. The PSA event sequence models should address the time available for operator actions. Especially important are the sequences where the time available to complete the actions may be short compared to the time necessary to complete the task.	2. Operator actions such as "Operator Fail to Establish Bleed and Feed", "Operator Fail to Depresurize SGs", "Operator Fail to Isolate Faulty SG", are modeled in the PSA. Operators fail to establish sump recirculation is also modeled.

Issue [EPRI PSA Applications Guide, Appendix B]	Issues Description [EPRI PSA Applications Guide, Appendix B]	Related Millstone Unit 3 (MP3) PSA Model Assumptions
	3. The PSA event sequence models should include all relevant EOPs.	3. In the development of each sequence model, relevant EOPs are taken into consideration such as "Establishing Bleed and Feed" and "Isolating Faulty SG".
III. <u>Systems Analysis</u>	1. As a minimum, the impact of room cooling on the control room and switchgear (or relay) rooms should be addressed in the PSA.	1. MP3 PSA models HVAC including: ESF (train A and train B ventilation fails), charging pump, and CCW pump ventilation, AFW, Mechanical Room ventilation, service water, screen house ventilation, control building chilled water, Switchgear and DG room cooling.
	2. Equipment operability under harsh environment during some sequences such as conditions inside the containment after a LOCA. The PSA should document whether or not, equipment are qualified to perform under degraded conditions.	2. Equipment qualification and operability under harsh environments are not addressed in MP3 Level-I PSA. A very limited consideration of these issues is provided in the Level-II portion.
	3. Batteries are standby components whose useful life is limited usually to a few hours and should be realistically credited in the PSA models. This issue is of concern for plants that have no "*backup*" to the preferred DC supply.	3. Millstone Unit 3 has dedicated a SBO Diesel generator.

Issue [EPRI PSA Applications Guide, Appendix B]	Issues Description [EPRI PSA Applications Guide, Appendix B]	Related Millstone Unit 3 (MP3) PSA Model Assumptions
	4. In some PSAs, failure of passive components are assessed to be important and, therefore, are included in the PSA models. In such cases, there is a concern that modeling failures of passive components may obscure other more important contributions. Therefore, the PSA should document why failures of passive components are important.	4. RWST rupture and failure to open of check valves are modeled in the MP3 PSA. However, back-leak failure of check valves is not modeled. Passive failures of components were only modeled if failure resulted in loss of multiple trains and/or systems (i.e., RWST isolation valve).
IV. <u>Parameter Estimation</u>	1. Recommended ranges for unscheduled maintenance unavailability's: **Turbine-Driven Pump Train:** 0.01 - 0.05 **Motor-Driven Pump Train:** 0.001 - 0.01 **Valves (MOVs):** 0.0001 - 0.005 **Diesel Generators:** 0.005 - 0.05 **Buses:** 0.0001 - 0.001 <u>Values outside these ranges should be noted and the reasons identified in the PSA</u>.	1. In MP3 PSA, the lower bound values of unavailabiities are above the recommended lower bound values. In general, all unavailability's are within the recommended ranges.

Issue [EPRI PSA Applications Guide, Appendix B]	Issues Description [EPRI PSA Applications Guide, Appendix B]	Related Millstone Unit 3 (MP3) PSA Model Assumptions
	2. Whether "power breakers" are included in the component boundaries in the fault trees.	2. Circuit breakers are modeled in the fault trees (especially those for pumps). More significantly, the control and motive power sources to breakers were modeled.
	3. Component failure rates and unavailability's should reflect plant experience to the extent possible.	3. To the extent possible, all component failure rates and unavailability's are MP3 plant-specific data. Only, in those cases where no plant-specific data are available, generic data are employed.
V. <u>Dependent Failures</u>	1. As a minimum, CCF should include:	
	1.1 Redundant standby pumps.	1.1 MP3 PSA model considers CCFs of redundant standby pumps, redundant MOVs, AOVs, and Cvs.
	1.2 Redundant MOVs/AOVs that change state.	1.2 Circuit breakers are not modeled for CCFs. These are bounded by the CCFs of the associated pumps or diesel generators MOVs (for example: CCF of a braker is an order of magniture less than that of pumps and MOVs).

Issue [EPRI PSA Applications Guide, Appendix B]	Issues Description [EPRI PSA Applications Guide, Appendix B]	Related Millstone Unit 3 (MP3) PSA Model Assumptions
	1.3 Redundant breakers, diesel generators. 1.4 Redundant check valves. 1.5 Any other components that change state.	
	<u>If they are not included, the reasons for not including CCFs between normally operating components should be explicitly given</u>. 2. Any PSA which has a CCF event probability which is less than 1/100 of the single component failure probability is somewhat out of line, and the reasons for this justifications should be carefully reviewed and documented.	2.1 In the MP3 PSA model, the beta factors for CCFs are $\geq$ 0.01. 2.2 Only for 4/4 component CCF case, the beta factor is 8.0E-3. 2.3 Most of MP3 PSA model CCFs eta factors are based on the following reference: *EPRI, "Advanced Light Water Reactor Requirements Document", Appendix A, Rev. 0.0, June 1989.*

Issue [EPRI PSA Applications Guide, Appendix B]	Issues Description [EPRI PSA Applications Guide, Appendix B]	Related Millstone Unit 3 (MP3) PSA Model Assumptions
VI. Human Reliability Analysis	1. If pre-initiating event human errors (such as failure to restore a system to its correct configuration following testing or maintenance, or miscalibration) are screened out, the basis for that decision should be documented.	1. Pre-initiating event human errors (also called latent errors) are exclusively modeled the fault trees. Furthermore, only those latent errors that affect more than one system or multiple trains of the same system are modeled. The two pre-initiating human errors considered are: manual valve 3SIL*V1 (from RWST) misaligned closed and manual valve 3RHS*V43 misaligned open.
	2. Post-initiating event human errors (i.e., failures to perform appropriate actions as directed by the EOPs or AOPs) should be plant and scenario specific. Any human error probability (HEP) that lies outside the following recommended ranges should be reviewed:	2. Millstone Unit 3 PSA models post-initiating event human errors (these errors are called type C errors) they are divided into two subgroups: C_p which are those actions dictated by operating procedures and C_R which represents recovery actions that may not be covered by procedure. Type C operator action (OA) errors are quantified by assigning a value based on whether it is a skill, rule, or knowledge-based response:

Issue [EPRI PSA Applications Guide, Appendix B]	Issues Description [EPRI PSA Applications Guide, Appendix B]	Related Millstone Unit 3 (MP3) PSA Model Assumptions
		Skill-Based: 5E-5 to 5E-3 Rule-Based: 5E-3 to 5E-1
	2.1 Failure to initiate primary feed and bleed: 10^{-1} - 10^{-3}	2.1 Failure to initiate primary feed and bleed: 10^{-2}
	2.2 Failure to isolate ruptured SG: 10^{-2} - 10^{-3}	2.2 Failure to isolate ruptured SG: 10^{-4} - 10^{-3}
	2.3 Failure to initiate depressurization and cooldown (LOCAs and SGTR): 10^{-3} - 10^{-5}	2.3 Failure to initiate depressurization and cooldown (LOCAs and SGTR): 10^{-2}
	2.4 Failure to switch over to recirculation: 10^{-1} - 10^{-3}	2.4 Failure to switch over to recirculation: 10^{-3}

Issue [EPRI PSA Applications Guide, Appendix B]	Issues Description [EPRI PSA Applications Guide, Appendix B]	Related Millstone Unit 3 (MP3) PSA Model Assumptions
	3. Failure to address dependencies between the individual HEPs that may occur in the same sequence cutset is a non-conservative approach.	3. Two rule files are developed for the recovery analysis. The first rule "RULE18.TXT" prohibit application of multiple operator actions within the same cut set. The second rule file "RULE18-2.TXT" allows multiple OAs to be applied within a cut set. This is necessary to allow some cut sets, which are otherwise too conservative, to have multiple recoveries.
	4. Use of multiple recovery actions (i.e., equipment repairs) in a single cut set is not recommended and may unrealistically drive down the core damage frequency. In such cases, the PSA should be carefully reviewed.	4. Operator recovery actions not placed within an event tree are added by a post-quantification cut set manipulator called *"Recovery Expert"*. This algorithm ensures that multiple operator actions are not added to the same cut set.
VII. <u>Quantification</u>	1. System mission times should be consistent with the accident scenario. This is, mission times could be less than 24 hours (which is normally assumed in most PSAs).	1. Millstone Unit 3 PSA model considers a 24 hours mission time except for sequences such loss of offsite power and station blackouts where less than 24 hours mission time is used (i.e., based on time-dependent calculations).

Issue [EPRI PSA Applications Guide, Appendix B]	Issues Description [EPRI PSA Applications Guide, Appendix B]	Related Millstone Unit 3 (MP3) PSA Model Assumptions
	2. The methodology of fault tree linking is based on: 2.1 ANDing the solutions of the fault trees. 2.2 Constructing and solving a large fault tree created by ANDing the contributing system fault trees.	2. MP3 PSA follows the fault tree linking methodology as described under 2.2, i.e., constructing and solving a large fault tree created by ANDing the contributing system fault trees.
VIII. Quantification of Plant Damage States	In the fault tree linking approach, the use of the delete term approach to accounting for the successes in event sequences is necessary to assure that the correct cut sets are generated. This is of more concern for the sequences associated with plant damage states than it is for quantification of overall core damage frequency. Not performing the deletion can give conservative results.	Millstone Unit 3 PSA model accounts for the deletion term as described in the EPRI PSA Applications Guide. For example, in a given plant damage state, if LPSI was successful but other equipment failed. Then, we delete any cut set that represents LPSI failed from the fault tree of that PDS. The latter fault tree is formed by ANDing all the fault trees that represent equipment failures.
IX. Analysis of Results	Truncation limit has an impact on the importance evaluation such that events with high RAWs may be deleted. The recommended truncation limit is 10^{-4} below the baseline CDF.	MP3 core damage frequency is 5.87E-5/RY and, therefore, the truncation limit would be 5.87E-9/RY. The current truncation limit in the MP3 PSA model is 1.0E-8/RY.

Issue [EPRI PSA Applications Guide, Appendix B]	Issues Description [EPRI PSA Applications Guide, Appendix B]	Related Millstone Unit 3 (MP3) PSA Model Assumptions
		Sensitivity Study. The following sensitivity study documents the impact of lowering the truncation limit from 1.0E-8 to 1.0E-9 on the CDF and the number of generated cut sets. The results of this sensitivity study shows that lowering the truncation limit from 1.0E-8 to 1.0E-9 has resulted in increasing the CDF by about 15% and the number of cut sets increased from 571 to about 2600 cut sets.
X. ATWS	Conservative success criteria with respect to pressure based on moderator temperature coefficient can make ATWS more important than it should be.	MP3 PSA model update follows WCAP-11993 report entitled *"Assessment of Compliance with ATWS Rule Basis for Westinghouse PWRs"*, Dec. 1988.
	If RRW of 1.005 or F-V of 0.005, respectively, is used as a measure of risk significance, it could lead to some additional SSCs being identified as risk significant.	For ATWS events, the MP3 PSA model conservatively assumes that fuel is at the beginning of cycle. Based on the WCAP-11993 discussion, there are times during core cycle for which an ATWS will exceed 3200 psig, despite the success of full AFW flow and full PRZ valve response. This would not be the case had manual rod insertion (MRI) been credited as an additional source of negative reactivity. This action was omitted for simplicity and conservatism.

Issue [EPRI PSA Applications Guide, Appendix B]	Issues Description [EPRI PSA Applications Guide, Appendix B]	Related Millstone Unit 3 (MP3) PSA Model Assumptions
XI. Loss of Offsite Power and Station Blackout	RCP Seal LOCA model assumptions: 1. Should be clearly stated. 2. If it is not a contributor, the reasons why should be determined. 3. Are the reasons based on plant specific design features rather than the adoption of an optimistic model?	RCP Seal LOCA is a major contributor to the MP3 core damage frequency. The MP3 Seal LOCA model assumptions are conservative - *that is,* we assume RCP Seal failure at time t = zero, given failure of thermal barrier cooling and failure of seal injection (i.e., no time delay is assumed).

ENCLOSURE 3

MILLSTONE UNIT 3

EXAMPLE EXPERT PANEL MEETING MINUTES

Northeast Utilities System

REVIEWED BY	
D.A.D	D AD
M.S.K.	
S.D.W	
M.M.V.	
M.V.B.	
E.A.D.	

Memo

January 2, 1996
NE-96-SAB-003

To: Distribution

From: E. A. Oswald EAO.

Subject: MP3 Risk-Based Inspection Expert Panel Meeting Minutes- 12/20/95

The Millstone Unit 3 RBI Expert Panel meeting was called to order on December 20, 1995, at 2:00 PM, in Conference Room C-101 of Bldg. 475. A quorum was present. Meeting attendees were:

R. Enoch	M.Gharakhanian	R. Schonenberg
R. West	H. Covin	P. Parulis
G. Gardner	E. Oswald	M. Smith

Elizabeth A. York, a Hartford Steam Boiler Authorized Nuclear Inservice Inspector was also present. The meeting minutes from the December 13 meeting were reviewed and accepted with no major comments. The purpose of this meeting was to have the Expert Panel review the Risk-Based Piping Inspection System List and concur that all the systems which are being evaluated for this program are being evaluated, and to review the safety significance of piping segments within the Emergency Generator Fuel Oil System (EGF). Two piping segments from the High Pressure Safety Injection System were also reviewed with the additional information which had been requested in a previous meeting.

RBI System Identification

The Expert Panel reviewed the list provided in Attachment 1.0 to determine its completeness to this application. The systems had been selected based on three criteria: 1) all Class 1, 2 and 3 systems currently within the ASME Section XI Program, 2) piping systems modeled within the PRA, and 3) various balance of plant (non-nuclear code class) fluid systems determined to be of importance. Twenty-one systems have been selected to be evaluated in more detail throughout this process. In Attachment 1.0 Table titled "Evaluation of Piping Systems for Exclusion in RBI Program," this system list was originally provided by H. Covin of MP3 Operations as systems which would result in a reactor trip. The Panel reviewed and discussed the reasons for exclusion from the

Program and accepted the final system list with further investigation of one system, Auxiliary Steam. M. Gharakhanian was concerned with the possible pipe rupture within the Auxiliary Steam System. Millstone Unit 2 has a problem with this system, in that an Auxiliary Steam pipe rupture will result in impacting the Control Room HVAC (habitability problem) and some MCCs. Further discussions with the System Engineer, Tom LaFauci, determined that there was no auxiliary steam piping in the vicinity of the Service Building which houses the Control Room. Hence, this system does not need to be addressed. Therefore, the Piping System List has been finalized.

Emergency Diesel Fuel System

The Emergency Diesel Fuel System (EGF) was divided into 4 segments (see Attachment 2.0). All of the piping segments have a failure probability of less than 1.0E-08. During panel discussions, it was noted that the cross-connect was credited, given a pipe rupture for EGF-1 and EGF-3. However, once the cross-connect valve V13 (V14) was opened and if the break was downstream of check valves V1(V7) and V3 (V9), the fuel oil would flow out the break. Therefore, the consequences of EGF-1 and EGF-3 were changed to be the same as EGF-2 and EGF-4 which is a loss of one Diesel Generator. It was also noted that there is an external-events impact associated with these piping segments. If the pipe ruptures in the vicinity of the operating Diesel Generator, there is a potential for a fire to result. However, based on room separation of the DGs, the consequence would be the loss of the operating Diesel. Based on the relatively low consequence, the importance measures are low - RRW of 1.0 and RAW of 176 (192). The Panel concurred that these piping segments were less safety-significant.

HPSI Piping Segments SIH-2 and SIH-3

The High Pressure Safety System (SIH) was reviewed by the Panel on November 15, 1995. A request for more information was made at that time concerning piping Segments SIH-2 and SIH-3. The consequence for these piping segments was a loss of the RWST; however, the pipe rupture size was relatively small (4" diam. pipe) and impacted only one HPSI train. The Panel wanted to evaluate the time available to take possible operator action, given there would be a flooding alarm and possible pump runout on high amps. It was thought that the switchover would be made earlier due to lower RWST level. M. Gharakhanian from Safety Analysis performed a simplified calculation which indicated that the RWST would be emptied in 8 hours, given this break (1000 gpm).

Discussions within the group came to the following conclusions:

- The flooding alarm would be silenced after the initiation of a LOCA, so it would be of little value.

- The RWST inventory which was lost out of the break would be significant. This would result in a loss of sump recirculation due to limited sump inventory.

- No operator action would be credited in injection phase of the LOCA.

Therefore, based on the high consequence - loss of the RWST, these piping segments were determined to be more safety-significant. Refer to Attachment 3.0 for the HPSI System Summary.

The next RBI Expert Panel meeting will be held on January 3, at 2:00 p.m., in Bldg. 475, C101. We will be reviewing the Reactor Coolant System. Please bring the packages already sent.

EAO:cms

Distribution:

R. Enoch
N. Closkey (Westinghouse)

Distribution (w/o Attachments):

K. Covin	T. Kulterman	T. Hamlin	M. Gharakhanian
D. Beachy	R. Rothgeb	M. Smith	D. McDaniel
P. Parulis	F. Cietek	B. Roy	R. Flanagan
J. Wilson	M. Powers	G. Miemiec	A. Silvia
R. Schonenberg	S. Sikorski	Y. Khalil	R. Rothgeb
R. West	G. Gardner	D. MacNeill	

CC (w/o attachments):

S. Weerakkody	M. Brothers	G. Pitman	T. Lyons
D. Gerber	N. Azevedo	M. Kai	T. Shaffer
K. Hastings			