UNITED STATES
NUCLEAR REGULATORY COMMISSION
WASHINGTON, D.C. 20555-0001

JUNE 2004

SUPPLEMENT 28 TO NUREG-0933
"A PRIORITIZATION OF GENERIC SAFETY ISSUES"

REVISION INSERTION INSTRUCTIONS

Introduction:	pp. 29 to 68, Rev. 27	pp. 29 to 68, Rev. 28
Section 2:	pp. 2.A.36-1 to 2, Rev. 1	pp. 2.A.36-1 to 2, Rev. 2
Section 3:	pp. 3.82-1 to 6, Rev. 2	pp. 3.82-1 to 6, Rev. 3
	pp. 3.168-1 to 2, Rev. 2	pp. 3.168-1 to 2, Rev. 3
	–	pp. 3.186-1 to 4
	–	pp. 3.193-1 to 26
	–	pp. 3.194-1 to 6
	–	pp. 3.195-1 to 13
References:	pp. R-1 to R-123, Rev. 17	pp. R-1 to R-126, Rev. 18
Appendix B	pp. A.B-1 to 13, Rev. 18	pp. A.B-1 to 13, Rev. 19

AVAILABILITY OF REFERENCE MATERIALS IN NRC PUBLICATIONS

NRC Reference Material

As of November 1999, you may electronically access NUREG-series publications and other NRC records at NRC's Public Electronic Reading Room at http://www.nrc.gov/reading-rm.html. Publicly released records include, to name a few, NUREG-series publications; *Federal Register* notices; applicant, licensee, and vendor documents and correspondence; NRC correspondence and internal memoranda; bulletins and information notices; inspection and investigative reports; licensee event reports; and Commission papers and their attachments.

NRC publications in the NUREG series, NRC regulations, and *Title 10, Energy*, in the Code of *Federal Regulations* may also be purchased from one of these two sources.

1. The Superintendent of Documents
   U.S. Government Printing Office
   Mail Stop SSOP
   Washington, DC 20402–0001
   Internet: bookstore.gpo.gov
   Telephone: 202-512-1800
   Fax: 202-512-2250
2. The National Technical Information Service
   Springfield, VA 22161–0002
   www.ntis.gov
   1–800–553–6847 or, locally, 703–605–6000

A single copy of each NRC draft report for comment is available free, to the extent of supply, upon written request as follows:

Address: Office of the Chief Information Officer,
Reproduction and Distribution
Services Section
U.S. Nuclear Regulatory Commission
Washington, DC 20555-0001
E-mail: DISTRIBUTION@nrc.gov
Facsimile: 301–415–2289

Some publications in the NUREG series that are posted at NRC's Web site address http://www.nrc.gov/reading-rm/doc-collections/nuregs are updated periodically and may differ from the last printed version. Although references to material found on a Web site bear the date the material was accessed, the material available on the date cited may subsequently be removed from the site.

Non-NRC Reference Material

Documents available from public and special technical libraries include all open literature items, such as books, journal articles, and transactions, *Federal Register* notices, Federal and State legislation, and congressional reports. Such documents as theses, dissertations, foreign reports and translations, and non-NRC conference proceedings may be purchased from their sponsoring organization.

Copies of industry codes and standards used in a substantive manner in the NRC regulatory process are maintained at—

The NRC Technical Library
Two White Flint North
11545 Rockville Pike
Rockville, MD 20852–2738

These standards are available in the library for reference use by the public. Codes and standards are usually copyrighted and may be purchased from the originating organization or, if they are American National Standards, from—

American National Standards Institute
11 West 42nd Street
New York, NY 10036–8002
www.ansi.org
212–642–4900

Legally binding regulatory requirements are stated only in laws; NRC regulations; licenses, including technical specifications; or orders, not in NUREG-series publications. The views expressed in contractor-prepared publications in this series are not necessarily those of the NRC.

The NUREG series comprises (1) technical and administrative reports and books prepared by the staff (NUREG–XXXX) or agency contractors (NUREG/CR–XXXX), (2) proceedings of conferences (NUREG/CP–XXXX), (3) reports resulting from international agreements (NUREG/IA–XXXX), (4) brochures (NUREG/BR–XXXX), and (5) compilations of legal decisions and orders of the Commission and Atomic and Safety Licensing Boards and of Directors' decisions under Section 2.206 of NRC's regulations (NUREG–0750).

TABLE II

LISTING OF ALL TMI ACTION PLAN ITEMS, TASK ACTION PLAN ITEMS, NEW GENERIC ISSUES, HUMAN FACTORS ISSUES, AND CHERNOBYL ISSUES

This table contains the priority designations for all issues listed in this report. For those issues found to be covered in other issues described in this document, the appropriate notations have been made in the Safety Priority Ranking column, e.g., I.A.2.2 in the Safety Priority Ranking column means that Item I.A.2.6(3) is covered in Item I.A.2.2. For those issues found to be covered in programs not described in this document, the notation (S) was made in the Safety Priority Ranking column. For resolved issues that have resulted in new requirements for operating plants, the appropriate multiplant licensing action number is listed. The licensing action numbering system bears no relationship to the numbering systems used for identifying the prioritized issues. An explanation of the classification and status of the issues is provided in the legend below.

Legend

NOTES:	1 - Possible Resolution Identified for Evaluation
	2 - Resolution Available (Documented in NUREG, NRC Memorandum, SER, or equivalent)
	3 - Resolution Resulted in either: (a) The Establishment of New Regulatory Requirements (By Rule, SRP Change, or equivalent) or (b) No New Requirements
	4 - Issue to be Prioritized in the Future
	5 - Issue that is not a Generic Safety Issue but should be Assigned Resources for Completion
HIGH	- High Safety Priority
MEDIUM	- Medium Safety Priority
LOW	- Low Safety Priority
DROP	- Issue Dropped as a Generic Issue
EI	- Environmental Issue
I	- Resolved TMI Action Plan Item with Implementation of Resolution Mandated by NUREG-0737
LI	- Licensing Issue
MPA	- Multiplant Action
NA	- Not Applicable
RI	- Regulatory Impact Issue
S	- Issue Covered in an NRC Program Outside the Scope of This Document
USI	- Unresolved Safety Issue
Continue	- As defined in NRC Management Directive 6.4

Table II (Continued)

Action Plan Item/ Issue No.	Title	Priority Analyst	Lead Office/ Division/ Branch	Safety Priority Ranking	Latest Rev.	Latest Issuance Date	MPA No.
			TMI ACTION PLAN ITEMS				
I.A	OPERATING PERSONNEL						
I.A.1	Operating Personnel and Staffing						
I.A.1.1	Shift Technical Advisor	-	NRR/DHFS/LQB	I	3	12/31/97	F-01
I.A.1.2	Shift Supervisor Administrative Duties	-	NRR/DHFS/LQB	I	3	12/31/97	
I.A.1.3	Shift Manning	-	NRR/DHFS/LQB	I	3	12/31/97	F-02
I.A.1.4	Long-Term Upgrading	R. Colmar	RES/DFO/HFBR	NOTE 3(a)	3	12/31/97	
I.A.2	Training and Qualifications of Operating Personnel						
I.A.2.1	Immediate Upgrading of Operator and Senior Operator Training and Qualifications	-	-	-			
I.A.2.1(1)	Qualifications - Experience	-	NRR/DHFS/LQB	I	6	12/31/97	F-03
I.A.2.1(2)	Training	-	NRR/DHFS/LQB	I	6	12/31/97	F-03
I.A.2.1(3)	Facility Certification of Competence and Fitness of Applicants for Operator and Senior Operator Licenses	-	NRR/DHFS/LQB	I	6	12/31/97	F-03
I.A.2.2	Training and Qualifications of Operations Personnel	R. Colmar	NRR/DHFS/LQB	NOTE 3(b)	6	12/31/97	NA
I.A.2.3	Administration of Training Programs	-	NRR/DHFS/LQB	I	6	12/31/97	
I.A.2.4	NRR Participation in Inspector Training	R. Colmar	NRR/DHFS/LQB	LI (NOTE 3)	6	12/31/97	NA
I.A.2.5	Plant Drills	R. Colmar	NRR/DHFS/LQB	NOTE 3(b)	6	12/31/97	NA
I.A.2.6	Long-Term Upgrading of Training and Qualifications	-	-	-			
I.A.2.6(1)	Revise Regulatory Guide 1.8	R. Colmar	NRR/DHFT/HFIB	NOTE 3(a)	6	12/31/97	NA
I.A.2.6(2)	Staff Review of NRR 80-117	R. Colmar	NRR/DHFS/LQB	NOTE 3(b)	6	12/31/97	NA
I.A.2.6(3)	Revise 10 CFR 55	R. Colmar	NRR/DHFS/LQB	I.A.2.2	6	12/31/97	NA
I.A.2.6(4)	Operator Workshops	R. Colmar	NRR/DHFS/LQB	NOTE 3(b)	6	12/31/97	NA
I.A.2.6(5)	Develop Inspection Procedures for Training Program	R. Colmar	NRR/DHFS/LQB	NOTE 3(b)	6	12/31/97	NA
I.A.2.6(6)	Nuclear Power Fundamentals	R. Colmar	NRR/DHFS/LQB	DROP	6	12/31/97	NA
I.A.2.7	Accreditation of Training Institutions	R. Colmar	NRR/DHFS/LQB	NOTE 3(b)	6	12/31/97	NA
I.A.3	Licensing and Requalification of Operating Personnel						
I.A.3.1	Revise Scope of Criteria for Licensing Examinations	R. Emrit	NRR/DHFS/LQB	I	6	12/31/97	
I.A.3.2	Operator Licensing Program Changes	R. Emrit	NRR/DHFS/OLB	NOTE 3(b)	6	12/31/97	NA
I.A.3.3	Requirements for Operator Fitness	R. Colmar	RES/DRAO/HFSB	NOTE 3(b)	6	12/31/97	NA
I.A.3.4	Licensing of Additional Operations Personnel	D. Thatcher	NRR/DHFS/LQB	NOTE 3(b)	6	12/31/97	NA
I.A.3.5	Establish Statement of Understanding with INPO and DOE	D. Thatcher	NRR/DHFS/HFEB	LI (NOTE 3)	6	12/31/97	NA
I.A.4	Simulator Use and Development						
I.A.4.1	Initial Simulator Improvement	-	-	-			
I.A.4.1(1)	Short-Term Study of Training Simulators	D. Thatcher	NRR/DHFS/OLB	NOTE 3(b)	6	12/31/97	NA
I.A.4.1(2)	Interim Changes in Training Simulators	D. Thatcher	NRR/DHFS/OLB	NOTE 3(a)	6	12/31/97	

Table II (Continued)

Action Plan Item/ Issue No.	Title	Priority Analyst	Lead Office/ Division/ Branch	Safety Priority Ranking	Latest Rev.	Latest Issuance Date	MPA No.
I.A.4.2	Long-Term Training Simulator Upgrade	-	-	-			
I.A.4.2(1)	Research on Training Simulators	R. Colmar	NRR/DHFT/HFIB	NOTE 3(a)	6	12/31/97	
I.A.4.2(2)	Upgrade Training Simulator Standards	R. Colmar	RES/DFO/HFBR	NOTE 3(a)	6	12/31/97	
I.A.4.2(3)	Regulatory Guide on Training Simulators	R. Colmar	RES/DFO/HFBR	NOTE 3(a)	6	12/31/97	
I.A.4.2(4)	Review Simulators for Conformance to Criteria	R. Colmar	NRR/DLPQ/LOLB	NOTE 3(a)	6	12/31/97	
I.A.4.3	Feasibility Study of Procurement of NRC Training Simulator	R. Colmar	RES/DAE/RSRB	LI (NOTE 3)	6	12/31/97	NA
I.A.4.4	Feasibility Study of NRC Engineering Computer	R. Colmar	RES/DAE/RSRB	LI (NOTE 3)	6	12/31/97	NA
I.B.	SUPPORT PERSONNEL						
I.B.1	Management for Operations						
I.B.1.1	Organization and Management Long-Term Improvements	-	-	-			
I.B.1.1(1)	Prepare Draft Criteria	R. Colmar	NRR/DHFT/HFIB	NOTE 3(b)	4	12/31/97	NA
I.B.1.1(2)	Prepare Commission Paper	R. Colmar	NRR/DHFT/HFIB	NOTE 3(b)	4	12/31/97	NA
I.B.1.1(3)	Issue Requirements for the Upgrading of Management and Technical Resources	R. Colmar	NRR/DHFT/HFIB	NOTE 3(b)	4	12/31/97	NA
I.B.1.1(4)	Review Responses to Determine Acceptability	R. Colmar	NRR/DHFT/HFIB	NOTE 3(b)	4	12/31/97	NA
I.B.1.1(5)	Review Implementation of the Upgrading Activities	R. Colmar	OIE/DQASIP/ORPB	NOTE 3(b)	4	12/31/97	NA
I.B.1.1(6)	Prepare Revisions to Regulatory Guides 1.33 and 1.8	R. Colmar	NRR/DHFS/LQB	I.A.2.6(1), 75	4	12/31/97	NA
I.B.1.1(7)	Issue Regulatory Guides 1.33 and 1.8	R. Colmar	NRR/DHFS/LQB	I.A.2.6(1), 75	4	12/31/97	NA
I.B.1.2	Evaluation of Organization and Management Improvements of Near-Term Operating License Applicants		-	-			
I.B.1.2(1)	Prepare Draft Criteria	-	NRR/DHFS/LQB	NOTE 3(b)	4	12/31/97	NA
I.B.1.2(2)	Review Near-Term Operating License Facilities	-	NRR/DHFS/LQB	NOTE 3(b)	4	12/31/97	NA
I.B.1.2(3)	Include Findings in the SER for Each Near-Term Operating License Facility	-	NRR/DL/ORAB	NOTE 3(b)	4	12/13/97	NA
I.B.1.3	Loss of Safety Function	-	-	-			
I.B.1.3(1)	Require Licensees to Place Plant in Safest Shutdown Cooling Following a Loss of Safety Function Due to Personnel Error	G. Sege	RES	LI (NOTE 3)	4	12/31/97	NA
I.B.1.3(2)	Use Existing Enforcement Options to Accomplish Safest Shutdown Cooling	G. Sege	RES	LI (NOTE 3)	4	12/31/97	NA
I.B.1.3(3)	Use Non-Fiscal Approaches to Accomplish Safest Shutdown Cooling	G. Sege	RES	LI (NOTE 3)	4	12/31/97	NA
I.B.2	Inspection of Operating Reactors						
I.B.2.1	Revise OIE Inspection Program	-	-	-			
I.B.2.1(1)	Verify the Adequacy of Management and Procedural Controls and Staff Discipline	G. Sege	OIE/DQASIP/RCPB	LI (NOTE 3)	1	12/31/97	NA

Table II (Continued)

Action Plan Item/ Issue No.	Title	Priority Analyst	Lead Office/ Division/ Branch	Safety Priority Ranking	Latest Rev.	Latest Issuance Date	MPA No.
I.B.2.1(2)	Verify that Systems Required to Be Operable Are Properly Aligned	G. Sege	OIE/DQASIP/RCPB	LI (NOTE 3)	1	12/31/97	NA
I.B.2.1(3)	Follow-up on Completed Maintenance Work Orders to Assure Proper Testing and Return to Service	G. Sege	OIE/DQASIP/RCPB	LI (NOTE 3)	1	12/31/97	NA
I.B.2.1(4)	Observe Surveillance Tests to Determine Whether Test Instruments Are Properly Calibrated	G. Sege	OIE/DQASIP/RCPB	LI (NOTE 3)	1	12/31/97	NA
I.B.2.1(5)	Verify that Licensees Are Complying with Technical Specifications	G. Sege	OIE/DQASIP/RCPB	LI (NOTE 3)	1	12/31/97	NA
I.B.2.1(6)	Observe Routine Maintenance	G. Sege	OIE/DQASIP/RCPB	LI (NOTE 3)	1	12/31/97	NA
I.B.2.1(7)	Inspect Terminal Boards, Panels, and Instrument Racks for Unauthorized Jumpers and Bypasses	G. Sege	OIE/DQASIP/RCPB	LI (NOTE 3)	1	12/31/97	NA
I.B.2.2	Resident Inspector at Operating Reactors	G. Sege	OIE/DQASIP/ORPB	LI (NOTE 3)	1	12/31/97	NA
I.B.2.3	Regional Evaluations	G. Sege	OIE/DQASIP/ORPB	LI (NOTE 3)	1	12/31/97	NA
I.B.2.4	Overview of Licensee Performance	G. Sege	OIE/DQASIP/ORPB	LI (NOTE 3)	1	12/31/97	NA
I.C	OPERATING PROCEDURES						
I.C.1	Short-Term Accident Analysis and Procedures Revision	-	-	-			
I.C.1(1)	Small Break LOCAs	-	NRR	I	4	12/31/97	
I.C.1(2)	Inadequate Core Cooling	-	NRR	I	4	12/31/97	F-04
I.C.1(3)	Transients and Accidents	-	NRR	I	4	12/31/97	F-05
I.C.1(4)	Confirmatory Analyses of Selected Transients	R. Riggs	NRR/DSI/RSB	NOTE 3(b)	4	12/31/97	NA
I.C.2	Shift and Relief Turnover Procedures	-	NRR	I	4	12/31/97	
I.C.3	Shift Supervisor Responsibilities	-	NRR	I	4	12/31/97	
I.C.4	Control Room Access	-	NRR	I	4	12/31/97	
I.C.5	Procedures for Feedback of Operating Experience to Plant Staff	-	NRR/DL	I	4	12/31/97	F-06
I.C.6	Procedures for Verification of Correct Performance of Operating Activities	-	NRR/DL	I	4	12/31/97	F-07
I.C.7	NSSS Vendor Review of Procedures	-	NRR/DHFS/PSRB	I	4	12/31/97	
I.C.8	Pilot Monitoring of Selected Emergency Procedures for Near-Term Operating License Applicants	-	NRR/DHFS/PSRB	I	4	12/31/97	
I.C.9	Long-Term Program Plan for Upgrading of Procedures	R. Riggs	NRR/DHFS/PSRB	NOTE 3(b)	4	12/31/97	NA
I.D	CONTROL ROOM DESIGN						
I.D.1	Control Room Design Reviews	-	NRR/DL	I	8	12/31/97	F-08
I.D.2	Plant Safety Parameter Display Console	-	NRR/DL	I	8	12/31/97	F-09
I.D.3	Safety System Status Monitoring	D. Thatcher	RES/DE/MEB	NOTE 3(b)	8	12/31/97	NA
I.D.4	Control Room Design Standard	D. Thatcher	RES/DRPS/RHFB	NOTE 3(b)	8	12/31/97	NA
I.D.5	Improved Control Room Instrumentation Research	-	-	-			

Table II (Continued)

Action Plan Item/ Issue No.	Title	Priority Analyst	Lead Office/ Division/ Branch	Safety Priority Ranking	Latest Rev.	Latest Issuance Date	MPA No.
I.D.5(1)	Operator-Process Communication	D. Thatcher	RES/DFO/HFBR	NOTE 3(b)	8	12/31/97	NA
I.D.5(2)	Plant Status and Post-Accident Monitoring	D. Thatcher	RES/DFO/HFBR	NOTE 3(a)	8	12/31/97	
I.D.5(3)	On-Line Reactor Surveillance System	D. Thatcher	RES/DE/MEB	NOTE 3(b)	8	12/31/97	NA
I.D.5(4)	Process Monitoring Instrumentation	D. Thatcher	RES/DFO/ICBR	NOTE 3(b)	8	12/31/97	NA
I.D.5(5)	Disturbance Analysis Systems	D. Thatcher	RES/DRPS/RHFB	LI (NOTE 3)	8	12/31/97	NA
I.D.6	Technology Transfer Conference	D. Thatcher	RES/DFO/HFBR	LI (NOTE 3)	8	12/31/97	NA
I.E	ANALYSIS AND DISSEMINATION OF OPERATING EXPERIENCE						
I.E.1	Office for Analysis and Evaluation of Operational Data	P. Matthews	AEOD/PTB	LI (NOTE 3)	3	12/31/97	NA
I.E.2	Program Office Operational Data Evaluation	P. Matthews	NRR/DL/ORAB	LI (NOTE 3)	3	12/31/97	NA
I.E.3	Operational Safety Data Analysis	P. Matthews	RES/DRA/RRBR	LI (NOTE 3)	3	12/31/97	NA
I.E.4	Coordination of Licensee, Industry, and Regulatory Programs	P. Matthews	AEOD/PTB	LI (NOTE 3)	3	12/31/97	NA
I.E.5	Nuclear Plant Reliability Data System	P. Matthews	AEOD/PTB	LI (NOTE 3)	3	12/31/97	NA
I.E.6	Reporting Requirements	P. Matthews	AEOD/PTB	LI (NOTE 3)	3	12/31/97	NA
I.E.7	Foreign Sources	P. Matthews	IP	LI (NOTE 3)	3	12/31/97	NA
I.E.8	Human Error Rate Analysis	P. Matthews	RES/DFO/HFBR	LI (NOTE 3)	3	12/31/97	NA
I.F	QUALITY ASSURANCE						
I.F.1	Expand QA List	J. Pittman	RES/DRA/ARGIB	NOTE 3(b)	4	12/31/98	NA
I.F.2	Develop More Detailed QA Criteria	-	-	-			
I.F.2(1)	Assure the Independence of the Organization Performing the Checking Function	J. Pittman	OIE/DQASIP/QUAB	LOW	4	12/31/98	NA
I.F.2(2)	Include QA Personnel in Review and Approval of Plant Procedures	J. Pittman	OIE/DQASIP/QUAB	NOTE 3(a)	4	12/31/98	NA
I.F.2(3)	Include QA Personnel in All Design, Construction, Installation, Testing, and Operation Activities	J. Pittman	OIE/DQASIP/QUAB	NOTE 3(a)	4	12/31/98	NA
I.F.2(4)	Establish Criteria for Determining QA Requirements for Specific Classes of Equipment	J. Pittman	OIE/DQASIP/QUAB	LOW	4	12/31/98	NA
I.F.2(5)	Establish Qualification Requirements for QA and QC Personnel	J. Pittman	OIE/DQASIP/QUAB	LOW	4	12/31/98	NA
I.F.2(6)	Increase the Size of Licensees' QA Staff	J. Pittman	OIE/DQASIP/QUAB	NOTE 3(a)	4	12/31/98	NA
I.F.2(7)	Clarify that the QA Program Is a Condition of the Construction Permit and Operating License	J. Pittman	OIE/DQASIP/QUAB	LOW	4	12/31/98	NA
I.F.2(8)	Compare NRC QA Requirements with Those of Other Agencies	J. Pittman	OIE/DQASIP/QUAB	LOW	4	12/31/98	NA

Table II (Continued)

Action Plan Item/ Issue No.	Title	Priority Analyst	Lead Office/ Division/ Branch	Safety Priority Ranking	Latest Rev.	Latest Issuance Date	MPA No.
I.F.2(9)	Clarify Organizational Reporting Levels for the QA Organization	J. Pittman	OIE/DQASIP/QUAB	NOTE 3(a)	4	12/31/98	NA
I.F.2(10)	Clarify Requirements for Maintenance of "As-Built" Documentation	J. Pittman	OIE/DQASIP/QUAB	LOW	4	12/30/98	NA
I.F.2(11)	Define Role of QA in Design and Analysis Activities	J. Pittman	OIE/DQASIP/QUAB	LOW	4	12/30/98	NA
I.G	PREOPERATIONAL AND LOW-POWER TESTING						
I.G.1	Training Requirements	-	NRR/DHFS/PSRB	I	3	12/31/97	
I.G.2	Scope of Test Program	H. Vandermolen	NRR/DHFS/PSRB	NOTE 3(a)	3	12/31/97	NA
II.A	SITING						
II.A.1	Siting Policy Reformulation	H. Vandermolen	NRR/DE/SAB	NOTE 3(b)	2	12/31/97	NA
II.A.2	Site Evaluation of Existing Facilities	H. Vandermolen	NRR/DE/SAB	V.A.1	2	12/31/97	NA
II.B	CONSIDERATION OF DEGRADED OR MELTED CORES IN SAFETY REVIEW						
II.B.1	Reactor Coolant System Vents	-	NRR/DL	I	4	12/31/97	F-10
II.B.2	Plant Shielding to Provide Access to Vital Areas and Protect Safety Equipment for Post-Accident Operation	-	NRR/DL	I	4	12/31/97	F-11
II.B.3	Post-Accident Sampling	-	NRR/DL	I	4	12/31/97	F-12
II.B.4	Training for Mitigating Core Damage	-	NRR/DL	I	4	12/31/97	F-13
II.B.5	Research on Phenomena Associated with Core Degradation and Fuel Melting	-	-	-			
II.B.5(1)	Behavior of Severely Damaged Fuel	H. Vandermolen	RES/DSR/AEB	LI (NOTE 5)	4	12/31/97	NA
II.B.5(2)	Behavior of Core-Melt	H. Vandermolen	RES/DSR/AEB	LI (NOTE 5)	4	12/31/97	NA
II.B.5(3)	Effect of Hydrogen Burning and Explosions on Containment Structure	H. Vandermolen	RES/DSR/AEB	LI (NOTE 5)	4	12/31/97	NA
II.B.6	Risk Reduction for Operating Reactors at Sites with High Population Densities	J. Pittman	NRR/DST/RRAB	NOTE 3(a)	4	12/31/97	
II.B.7	Analysis of Hydrogen Control	P. Matthews	NRR/DSI/CSB	II.B.8	4	12/31/97	
II.B.8	Rulemaking Proceeding on Degraded Core Accidents	H. Vandermolen	RES/DRAO/RAMR	NOTE 3(a)	4	12/31/97	
II.C	RELIABILITY ENGINEERING AND RISK ASSESSMENT						
II.C.1	Interim Reliability Evaluation Program	J. Pittman	RES/DRAO/RRB	NOTE 3(b)	3	12/31/97	NA
II.C.2	Continuation of Interim Reliability Evaluation Program	J. Pittman	NRR/DST/RRAB	NOTE 3(b)	3	12/31/97	NA
II.C.3	Systems Interaction	J. Pittman	NRR/DST/GIB	A-17	3	12/31/97	NA
II.C.4	Reliability Engineering	J. Pittman	RES/DRPS/RHFB	NOTE 3(b)	3	12/31/97	NA

Table II (Continued)

Action Plan Item/ Issue No.	Title	Priority Analyst	Lead Office/ Division/ Branch	Safety Priority Ranking	Latest Rev.	Latest Issuance Date	MPA No.
II.D	REACTOR COOLANT SYSTEM RELIEF AND SAFETY VALVES						
II.D.1	Testing Requirements	-	NRR/DL	I	3	12/31/98	F-14
II.D.2	Research on Relief and Safety Valve Test Requirements	R. Riggs	RES	LOW	3	12/31/98	NA
II.D.3	Relief and Safety Valve Position Indication	-	NRR	I	3	12/31/98	
II.E	SYSTEM DESIGN						
II.E.1	Auxiliary Feedwater System						
II.E.1.1	Auxiliary Feedwater System Evaluation	-	NRR/DL	I	2	12/31/97	F-15
II.E.1.2	Auxiliary Feedwater System Automatic Initiation and Flow Indication	-	NRR/DL	I	2	12/31/97	F-16, F-17
II.E.1.3	Update Standard Review Plan and Develop Regulatory Guide	R. Riggs	RES/DRA/RRBR	NOTE 3(a)	2	12/31/97	
II.E.2	Emergency Core Cooling System						
II.E.2.1	Reliance on ECCS	R. Riggs	NRR/DSI/RSB	II.K.3(17)	3	12/31/98	NA
II.E.2.2	Research on Small Break LOCAs and Anomalous Transients	R. Riggs	RES/DAE/RSRB	NOTE 3(b)	3	12/31/98	NA
II.E.2.3	Uncertainties in Performance Predictions	H. Vandermolen	NRR/DSI/RSB	LOW	3	12/31/98	NA
II.E.3	Decay Heat Removal						
II.E.3.1	Reliability of Power Supplies for Natural Circulation	-	NRR/DL	I	2	12/31/97	
II.E.3.2	Systems Reliability	H. Vandermolen	NRR/DST/GIB	A-45	2	12/31/97	NA
II.E.3.3	Coordinated Study of Shutdown Heat Removal Requirements	H. Vandermolen	NRR/DST/GIB	A-45	2	12/31/97	NA
II.E.3.4	Alternate Concepts Research	R. Riggs	RES/DAE/FBRB	NOTE 3(b)	2	12/31/97	NA
II.E.3.5	Regulatory Guide	R. Riggs	NRR/DST/GIB	A-45	2	12/31/97	NA
II.E.4	Containment Design						
II.E.4.1	Dedicated Penetrations	-	NRR/DL	I	2	12/31/97	F-18
II.E.4.2	Isolation Dependability	-	NRR/DL	I	2	12/31/97	F-19
II.E.4.3	Integrity Check	W. Milstead	RES/DRPS/RPSI	NOTE 3(b)	2	12/31/97	NA
II.E.4.4	Purging	-	-	-			
II.E.4.4(1)	Issue Letter to Licensees Requesting Limited Purging	W. Milstead	NRR/DSI/CSB	NOTE 3(a)	2	12/31/97	
II.E.4.4(2)	Issue Letter to Licensees Requesting Information on Isolation Letter	W. Milstead	NRR/DSI/CSB	NOTE 3(a)	2	12/31/97	
II.E.4.4(3)	Issue Letter to Licensees on Valve Operability	W. Milstead	NRR/DSI/CSB	NOTE 3(a)	2	12/31/97	
II.E.4.4(4)	Evaluate Purging and Venting During Normal Operation	W. Milstead	NRR/DSI/CSB	NOTE 3(b)	2	12/31/97	NA
II.E.4.4(5)	Issue Modified Purging and Venting Requirement	W. Milstead	NRR/DSI/CSB	NOTE 3(b)	2	12/31/97	NA

Table II (Continued)

Action Plan Item/ Issue No.	Title	Priority Analyst	Lead Office/ Division/ Branch	Safety Priority Ranking	Latest Rev.	Latest Issuance Date	MPA No.
II.E.5	Design Sensitivity of B&W Reactors						
II.E.5.1	Design Evaluation	D. Thatcher	NRR/DSI/RSB	NOTE 3(a)	2	12/31/98	
II.E.5.2	B&W Reactor Transient Response Task Force	D. Thatcher	NRR/DL/ORAB	NOTE 3(a)	2	12/31/98	
II.E.6	In Situ Testing of Valves						
II.E.6.1	Test Adequacy Study	D. Thatcher	RES/DE/EIB	NOTE 3(a)	2	12/31/98	
II.F	INSTRUMENTATION AND CONTROLS						
II.F.1	Additional Accident Monitoring Instrumentation	-	NRR/DL	I	3	12/31/98	F-20, F-21, F-22, F-23, F-24, F-25
II.F.2	Identification of and Recovery from Conditions Leading to Inadequate Core Cooling	-	NRR/DL	I	3	12/31/98	F-26
II.F.3	Instruments for Monitoring Accident Conditions	H. Vandermolen	RES/DFO/ICBR	NOTE 3(a)	3	12/31/98	
II.F.4	Study of Control and Protective Action Design Requirements	D. Thatcher	NRR/DSI/ICSB	DROP	3	12/31/98	NA
II.F.5	Classification of Instrumentation, Control, and Electrical Equipment	D. Thatcher	RES/DE	LI (NOTE 3)	3	12/31/98	NA
II.G	ELECTRICAL POWER						
II.G.1	Power Supplies for Pressurizer Relief Valves, Block Valves, and Level Indicators	-	NRR	I	1	12/31/98	NA
II.H	TMI-2 CLEANUP AND EXAMINATION						
II.H.1	Maintain Safety of TMI-2 and Minimize Environmental Impact	P. Matthews	NRR/TMIPO	NOTE 3(b)	3	12/31/98	NA
II.H.2	Obtain Technical Data on the Conditions Inside the TMI-2 Containment Structure	W. Milstead	RES/DRAA/AEB	NOTE 3(b)	3	12/31/98	NA
II.H.3	Evaluate and Feed Back Information Obtained from TMI	W. Milstead	NRR/TMIPO	II.H.2	3	12/31/98	NA
II.H.4	Determine Impact of TMI on Socioeconomic and Real Property Values	W. Milstead	RES/DHSWM/SEBR	LI (NOTE 3)	3	12/31/98	NA

Table II (Continued)

Action Plan Item/ Issue No.	Title	Priority Analyst	Lead Office/ Division/ Branch	Safety Priority Ranking	Latest Rev.	Latest Issuance Date	MPA No.
II.J	GENERAL IMPLICATIONS OF TMI FOR DESIGN AND CONSTRUCTION ACTIVITIES						
II.J.1	Vendor Inspection Program						
II.J.1.1	Establish a Priority System for Conducting Vendor Inspections	L. Riani	OIE/DQASIP	LI (NOTE 3)	1	12/31/98	NA
II.J.1.2	Modify Existing Vendor Inspection Program	L. Riani	OIE/DQASIP	LI (NOTE 3)	1	12/31/98	NA
II.J.1.3	Increase Regulatory Control Over Present Non-Licensees	L. Riani	OIE/DQASIP	LI (NOTE 3)	1	12/31/98	NA
II.J.1.4	Assign Resident Inspectors to Reactor Vendors and Architect-Engineers	L. Riani	OIE/DQASIP	LI (NOTE 3)	1	12/31/98	NA
II.J.2	Construction Inspection Program						
II.J.2.1	Reorient Construction Inspection Program	L. Riani	OIE/DQASIP	LI (NOTE 3)	1	12/31/98	NA
II.J.2.2	Increase Emphasis on Independent Measurement in Construction Inspection Program	L. Riani	OIE/DQASIP	LI (NOTE 3)	1	12/31/98	NA
II.J.2.3	Assign Resident Inspectors to All Construction Sites	L. Riani	OIE/DQASIP	LI (NOTE 3)	1	12/31/98	NA
II.J.3	Management for Design and Construction						
II.J.3.1	Organization and Staffing to Oversee Design and Construction	J. Pittman	NRR/DHFS/LQB	I.B.1.1	1	12/31/98	NA
II.J.3.2	Issue Regulatory Guide	J. Pittman	NRR/DHFS/LQB	I.B.1.1	1	12/31/98	NA
II.J.4	Revise Deficiency Reporting Requirements						
II.J.4.1	Revise Deficiency Reporting Requirements	L. Riani	AEOD/DSP/ROAB	NOTE 3(a)	3	12/31/98	NA
II.K	MEASURES TO MITIGATE SMALL-BREAK LOSS-OF-COOLANT ACCIDENTS AND LOSS-OF-FEEDWATER ACCIDENTS						
II.K.1	IE Bulletins	-	-	-			
II.K.1(1)	Review TMI-2 PNs and Detailed Chronology of the TMI-2 Accident	R. Emrit	NRR	NOTE 3(a)		12/31/84	-
II.K.1(2)	Review Transients Similar to TMI-2 That Have Occurred at Other Facilities and NRC Evaluation of Davis-Besse Event	R. Emrit	NRR	NOTE 3(a)		12/31/84	-
II.K.1(3)	Review Operating Procedures for Recognizing, Preventing, and Mitigating Void Formation in Transients and Accidents	R. Emrit	NRR	NOTE 3(a)		12/31/84	-
II.K.1(4)	Review Operating Procedures and Training Instructions	R. Emrit	NRR	NOTE 3(a)		12/31/84	-
II.K.1(5)	Safety-Related Valve Position Description	R. Emrit	NRR	NOTE 3(a)		12/31/84	-

Table II (Continued)

Action Plan Item/ Issue No.	Title	Priority Analyst	Lead Office/ Division/ Branch	Safety Priority Ranking	Latest Rev.	Latest Issuance Date	MPA No.
II.K.1(6)	Review Containment Isolation Initiation Design and Procedures	R. Emrit	NRR	NOTE 3(a)		12/31/84	-
II.K.1(7)	Implement Positive Position Controls on Valves That Could Compromise or Defeat AFW Flow	R. Emrit	NRR	NOTE 3(a)		12/31/84	-
II.K.1(8)	Implement Procedures That Assure Two Independent 100% AFW Flow Paths	R. Emrit	NRR	NOTE 3(a)		12/31/84	-
II.K.1(9)	Review Procedures to Assure That Radioactive Liquids and Gases Are Not Transferred out of Containment Inadvertently	R. Emrit	NRR	NOTE 3(a)		12/31/84	-
II.K.1(10	Review and Modify Procedures for Removing Safety-Related Systems from Service	R. Emrit	NRR	NOTE 3(a)		12/31/84	-
II.K.1(11)	Make All Operating and Maintenance Personnel Aware of the Seriousness and Consequences of the Erroneous Actions Leading up to, and in Early Phases of, the TMI-2 Accident	R. Emrit	NRR	NOTE 3(a)		12/31/84	-
II.K.1(12)	One Hour Notification Requirement and Continuous Communications Channels	R. Emrit	NRR	NOTE 3(a)		12/31/84	-
II.K.1(13)	Propose Technical Specification Changes Reflecting Implementation of All Bulletin Items	R. Emrit	NRR	NOTE 3(a)		12/31/84	-
II.K.1(14)	Review Operating Modes and Procedures to Deal with Significant Amounts of Hydrogen	R. Emrit	NRR	NOTE 3(a)		12/31/84	-
II.K.1(15)	For Facilities with Non-Automatic AFW Initiation, Provide Dedicated Operator in Continuous Communication with CR to Operate AFW	R. Emrit	NRR	NOTE 3(a)		12/31/84	-
II.K.1(16)	Implement Procedures That Identify PRZ PORV "Open" Indications and That Direct Operator to Close Manually at "Reset" Setpoint	R. Emrit	NRR	NOTE 3(a)		12/31/84	-
II.K.1(17)	Trip PZR Level Bistable so That PZR Low Pressure Will Initiate Safety Injection	R. Emrit	NRR	NOTE 3(a)		12/31/84	-
II.K.1(18)	Develop Procedures and Train Operators on Methods of Establishing and Maintaining Natural Circulation	R. Emrit	NRR	NOTE 3(a)		12/31/84	-
II.K.1(19)	Describe Design and Procedure Modifications to Reduce Likelihood of Automatic PZR PORV Actuation in Transients	R. Emrit	NRR	NOTE 3(a)		12/31/84	-
II.K.1(20)	Provide Procedures and Training to Operators for Prompt Manual Reactor Trip for LOFW, TT, MSIV Closure, LOOP, LOSG Level, and LO PZR Level	R. Emrit	NRR	NOTE 3(a)		12/31/84	-
II.K.1(21)	Provide Automatic Safety-Grade Anticipatory Reactor Trip for LOFW, TT, or Significant Decrease in SG Level	R. Emrit	NRR	NOTE 3(a)		12/31/84	-

Table II (Continued)

Action Plan Item/ Issue No.	Title	Priority Analyst	Lead Office/ Division/ Branch	Safety Priority Ranking	Latest Rev.	Latest Issuance Date	MPA No.
II.K.1(22)	Describe Automatic and Manual Actions for Proper Functioning of Auxiliary Heat Removal Systems When FW System Not Operable	R. Emrit	NRR	NOTE 3(a)		12/31/84	-
II.K.1(23)	Describe Uses and Types of RV Level Indication for Automatic and Manual Initiation Safety Systems	R. Emrit	NRR	NOTE 3(a)		12/31/84	-
II.K.1(24)	Perform LOCA Analyses for a Range of Small-Break Sizes and a Range of Time Lapses Between Reactor Trip and RCP Trip	R. Emrit	NRR	NOTE 3(a)		12/31/84	-
II.K.1(25)	Develop Operator Action Guidelines	R. Emrit	NRR	NOTE 3(a)		12/31/84	-
II.K.1(26)	Revise Emergency Procedures and Train ROs and SROs	R. Emrit	NRR	NOTE 3(a)		12/31/84	-
II.K.1(27)	Provide Analyses and Develop Guidelines and Procedures for Inadequate Core Cooling Conditions	R. Emrit	NRR	NOTE 3(a)		12/31/84	-
II.K.1(28)	Provide Design That Will Assure Automatic RCP Trip for All Circumstances Where Required	R. Emrit	NRR	NOTE 3(a)		12/31/84	-
II.K.2	Commission Orders on B&W Plants	-	-	-			
II.K.2(1)	Upgrade Timeliness and Reliability of AFW System	R. Emrit	NRR/DSI	NOTE 3(a)		12/31/84	-
II.K.2(2)	Procedures and Training to Initiate and Control AFW Independent of Integrated Control System	R. Emrit	NRR	NOTE 3(a)		12/31/84	-
II.K.2(3)	Hard-Wired Control-Grade Anticipatory Reactor Trips	R. Emrit	NRR/DSI	NOTE 3(a)		12/31/84	-
II.K.2(4)	Small-Break LOCA Analysis, Procedures and Operator Training	R. Emrit	NRR/DHFS/OLB	NOTE 3(a)		12/31/84	-
II.K.2(5)	Complete TMI-2 Simulator Training for All Operators	R. Emrit	NRR	NOTE 3(a)		12/31/84	-
II.K.2(6)	Reevaluate Analysis for Dual-Level Setpoint Control	R. Emrit	NRR/DSI	NOTE 3(a)		12/31/84	-
II.K.2(7)	Reevaluate Transient of September 24, 1977	R. Emrit	NRR/DSI	NOTE 3(a)		12/31/84	-
II.K.2(8)	Continued Upgrading of AFW System	R. Emrit	NRR	II.E.1.1, II.E.1.2		12/31/84	NA
II.K.2(9)	Analysis and Upgrading of Integrated Control System	R. Emrit	NRR	I		12/31/84	F-27
II.K.2(10)	Hard-Wired Safety-Grade Anticipatory Reactor Trips	R. Emrit	NRR	I		12/31/84	F-28
II.K.2(11)	Operator Training and Drilling	R. Emrit	NRR	I		12/31/84	F-29
II.K.2(12)	Transient Analysis and Procedures for Management of Small Breaks	R. Emrit	NRR	I.C.1(3)		12/31/84	NA
II.K.2(13)	Thermal-Mechanical Report on Effect of HPI on Vessel Integrity for Small-Break LOCA With No AFW	R. Emrit	NRR	I		12/31/84	F-30
II.K.2(14)	Demonstrate That Predicted Lift Frequency of PORVs and SVs Is Acceptable	R. Emrit	NRR	I		12/31/84	F-31
II.K.2(15)	Analysis of Effects of Slug Flow on Once-Through Steam Generator Tubes After Primary System Voiding	R. Emrit	NRR	I		12/31/84	-
II.K.2(16)	Impact of RCP Seal Damage Following Small-Break LOCA With Loss of Offsite Power	R. Emrit	NRR	I		12/31/84	F-32
II.K.2(17)	Analysis of Potential Voiding in RCS During Anticipated Transients	R. Emrit	NRR	I		12/31/84	F-33

Table II (Continued)

Action Plan Item/ Issue No.	Title	Priority Analyst	Lead Office/ Division/ Branch	Safety Priority Ranking	Latest Rev.	Latest Issuance Date	MPA No.
II.K.2(18)	Analysis of Loss of Feedwater and Other Anticipated Transients	R. Emrit	NRR	I.C.1(3)		12/31/84	NA
II.K.2(19)	Benchmark Analysis of Sequential AFW Flow to Once-Through Steam Generator	R. Emrit	NRR	I		12/31/84	F-34
II.K.2(20)	Analysis of Steam Response to Small-Break LOCA That Causes System Pressure to Exceed PORV Setpoint	R. Emrit	NRR	I		12/31/84	F-35
II.K.2(21)	LOFT L3-1 Predictions	R. Emrit	NRR/DSI	NOTE 3(a)		12/31/84	-
II.K.3	Final Recommendations of Bulletins and Orders Task Force	-	-	-			
II.K.3(1)	Install Automatic PORV Isolation System and Perform Operational Test	R. Emrit	NRR	I		12/31/84	F-36
II.K.3(2)	Report on Overall Safety Effect of PORV Isolation System	R. Emrit	NRR	I		12/31/84	F-37
II.K.3(3)	Report Safety and Relief Valve Failures Promptly and Challenges Annually	R. Emrit	NRR	I		12/31/84	F-38
II.K.3(4)	Review and Upgrade Reliability and Redundancy of Non-Safety Equipment for Small-Break LOCA Mitigation	R. Emrit	NRR	II.C.1, II.C.2, II.C.3		12/31/84	NA
II.K.3(5)	Automatic Trip of Reactor Coolant Pumps	R. Emrit	NRR	I		12/31/84	F-39, G-01
II.K.3(6)	Instrumentation to Verify Natural Circulation	R. Emrit	NRR/DSI	I.C.1(3), II.F.2, II.F.3		12/31/84	NA
II.K.3(7)	Evaluation of PORV Opening Probability During Overpressure Transient	R. Emrit	NRR	I		12/31/84	-
II.K.3(8)	Further Staff Consideration of Need for Diverse Decay Heat Removal Method Independent of SGs	R. Emrit	NRR/DST/GIB	II.C.1, II.E.3.3		12/31/84	NA
II.K.3(9)	Proportional Integral Derivative Controller Modification	R. Emrit	NRR	I		12/31/84	F-40
II.K.3(10)	Anticipatory Trip Modification Proposed by Some Licensees to Confine Range of Use to High Power Levels	R. Emrit	NRR	I		12/31/84	F-41
II.K.3(11)	Control Use of PORV Supplied by Control Components, Inc. Until Further Review Complete	R. Emrit	NRR	I		12/31/84	-
II.K.3(12)	Confirm Existence of Anticipatory Trip Upon Turbine Trip	R. Emrit	NRR	I		12/31/84	F-42
II.K.3(13)	Separation of HPCI and RCIC System Initiation Levels	R. Emrit	NRR	I		12/31/84	F-43
II.K.3(14)	Isolation of Isolation Condensers on High Radiation	R. Emrit	NRR	I		12/31/84	F-44
II.K.3(15)	Modify Break Detection Logic to Prevent Spurious Isolation of HPCI and RCIC Systems	R. Emrit	NRR	I		12/31/84	F-45

Table II (Continued)

Action Plan Item/ Issue No.	Title	Priority Analyst	Lead Office/ Division/ Branch	Safety Priority Ranking	Latest Rev.	Latest Issuance Date	MPA No.
II.K.3(16)	Reduction of Challenges and Failures of Relief Valves - Feasibility Study and System Modification	R. Emrit	NRR	I		12/31/84	F-46
II.K.3(17)	Report on Outage of ECC Systems - Licensee Report and Technical Specification Changes	R. Emrit	NRR	I		12/31/84	F-47
II.K.3(18)	Modification of ADS Logic - Feasibility Study and Modification for Increased Diversity for Some Event Sequences	R. Emrit	NRR	I		12/31/84	F-48
II.K.3(19)	Interlock on Recirculation Pump Loops	R. Emrit	NRR	I		12/31/84	F-49
II.K.3(20)	Loss of Service Water for Big Rock Point	R. Emrit	NRR	I		12/31/84	-
II.K.3(21)	Restart of Core Spray and LPCI Systems on Low Level - Design and Modification	R. Emrit	NRR	I		12/31/84	F-50
II.K.3(22)	Automatic Switchover of RCIC System Suction - Verify Procedures and Modify Design	R. Emrit	NRR	I		12/31/84	F-51
II.K.3(23)	Central Water Level Recording	R. Emrit	NRR	I.D.2, III.A.1.2(1), III.A.3.4		12/31/84	NA
II.K.3(24)	Confirm Adequacy of Space Cooling for HPCI and RCIC Systems	R. Emrit	NRR	I		12/31/84	F-52
II.K.3(25)	Effect of Loss of AC Power on Pump Seals	R. Emrit	NRR	I		12/31/84	F-53
II.K.3(26)	Study Effect on RHR Reliability of Its Use for Fuel Pool Cooling	R. Emrit	NRR/DSI	II.E.2.1		12/31/84	NA
II.K.3(27)	Provide Common Reference Level for Vessel Level Instrumentation	R. Emrit	NRR	I		12/31/84	F-54
II.K.3(28)	Study and Verify Qualification of Accumulators on ADS Valves	R. Emrit	NRR	I		12/31/84	F-55
II.K.3(29)	Study to Demonstrate Performance of Isolation Condensers with Non-Condensibles	R. Emrit	NRR	I		12/31/84	F-56
II.K.3(30)	Revised Small-Break LOCA Methods to Show Compliance with 10 CFR 50, Appendix K	R. Emrit	NRR	I		12/31/84	F-57
II.K.3(31)	Plant-Specific Calculations to Show Compliance with 10 CFR 50.46	R. Emrit	NRR	I		12/31/84	F-58
II.K.3(32)	Provide Experimental Verification of Two-Phase Natural Circulation Models	R. Emrit	NRR/DSI	II.E.2.2		12/31/84	NA
II.K.3(33)	Evaluate Elimination of PORV Function	R. Emrit	NRR	II.C.1		12/31/84	NA
II.K.3(34)	Relap-4 Model Development	R. Emrit	NRR/DSI	II.E.2.2		12/31/84	NA
II.K.3(35)	Evaluation of Effects of Core Flood Tank Injection on Small-Break LOCAs	R. Emrit	NRR	I.C.1(3)		12/31/84	NA
II.K.3(36)	Additional Staff Audit Calculations of B&W Small-Break LOCA Analyses	R. Emrit	NRR	I.C.1(3)		12/31/84	NA

Table II (Continued)

Action Plan Item/ Issue No.	Title	Priority Analyst	Lead Office/ Division/ Branch	Safety Priority Ranking	Latest Rev.	Latest Issuance Date	MPA No.
II.K.3(37)	Analysis of B&W Response to Isolated Small-Break LOCA	R. Emrit	NRR	I.C.1(3)		12/31/84	NA
II.K.3(38)	Analysis of Plant Response to a Small-Break LOCA in the Pressurizer Spray Line	R. Emrit	NRR	I.C.1(3)		12/31/84	NA
II.K.3(39)	Evaluation of Effects of Water Slugs in Piping Caused by HPI and CFT Flows	R. Emrit	NRR	I.C.1(3)		12/31/84	NA
II.K.3(40)	Evaluation of RCP Seal Damage and Leakage During a Small-Break LOCA	R. Emrit	NRR	II.K.2(16)		12/31/84	NA
II.K.3(41)	Submit Predictions for LOFT Test L3-6 with RCPs Running	R. Emrit	NRR	I.C.1(3)		12/31/84	NA
II.K.3(42)	Submit Requested Information on the Effects of Non-Condensible Gases	R. Emrit	NRR	I.C.1(3)		12/31/84	NA
II.K.3(43)	Evaluation of Mechanical Effects of Slug Flow on Steam Generator Tubes	R. Emrit	NRR	II.K.2(15)		12/31/84	NA
II.K.3(44)	Evaluation of Anticipated Transients with Single Failure to Verify No Significant Fuel Failure	R. Emrit	NRR	I		12/31/84	F-59
II.K.3(45)	Evaluate Depressurization with Other Than Full ADS	R. Emrit	NRR	I		12/31/84	F-60
II.K.3(46)	Response to List of Concerns from ACRS Consultant	R. Emrit	NRR	I		12/31/84	F-61
II.K.3(47)	Test Program for Small-Break LOCA Model Verification Pretest Prediction, Test Program, and Model Verification	R. Emrit	NRR	I.C.1(3), II.E.2.2		12/31/84	NA
II.K.3(48)	Assess Change in Safety Reliability as a Result of Implementing B&OTF Recommendations	R. Emrit	NRR	II.C.1, II.C.2		12/31/84	NA
II.K.3(49)	Review of Procedures (NRC)	R. Emrit	NRR/DHFS/PSRB	I.C.8, I.C.9		12/31/84	NA
II.K.3(50)	Review of Procedures (NSSS Vendors)	R. Emrit	NRR/DHFS/PSRB	I.C.7, I.C.9		12/31/84	NA
II.K.3(51)	Symptom-Based Emergency Procedures	R. Emrit	NRR/DHFS/PSRB	I.C.9		12/31/84	NA
II.K.3(52)	Operator Awareness of Revised Emergency Procedures	R. Emrit	NRR	I.B.1.1, I.C.2, I.C.5		12/31/84	NA
II.K.3(53)	Two Operators in Control Room	R. Emrit	NRR	I.A.1.3		12/31/84	NA
II.K.3(54)	Simulator Upgrade for Small-Break LOCAs	R. Emrit	NRR	I.A.4.1(2)		12/31/84	NA
II.K.3(55)	Operator Monitoring of Control Board	R. Emrit	NRR	I.C.1(3), I.D.2, I.D.3		12/31/84	NA
II.K.3(56)	Simulator Training Requirements	R. Emrit	NRR/DHFS/OLB	I.A.2.6(3), I.A.3.1		12/31/84	NA
II.K.3(57)	Identify Water Sources Prior to Manual Activation of ADS	R. Emrit	NRR	I		12/31/84	F-62

Table II (Continued)

Action Plan Item/ Issue No.	Title	Priority Analyst	Lead Office/ Division/ Branch	Safety Priority Ranking	Latest Rev.	Latest Issuance Date	MPA No.
III.A	EMERGENCY PREPAREDNESS AND RADIATION EFFECTS						
III.A.1	Improve Licensee Emergency Preparedness - Short-Term						
III.A.1.1	Upgrade Emergency Preparedness	-		-			
III.A.1.1(1)	Implement Action Plan Requirements for Promptly Improving Licensee Emergency Preparedness	-	OIE/DEPER/EPB I		2	06/30/91	
III.A.1.1(2)	Perform an Integrated Assessment of the Implementation	-	OIE/DEPER/EPB	NOTE 3(b)	2	06/30/91	NA
III.A.1.2	Upgrade Licensee Emergency Support Facilities	-	-	-	2	06/30/91	
III.A.1.2(1)	Technical Support Center	-	OIE/DEPER/EPB	I	2	06/30/91	F-63
III.A.1.2(2)	On-Site Operational Support Center	-	OIE/DEPER/EPB I		2	06/30/91	F-64
III.A.1.2(3)	Near-Site Emergency Operations Facility	-	OIE/DEPER/EPB I		2	06/30/91	F-65
III.A.1.3	Maintain Supplies of Thyroid-Blocking Agent	-	-	-	2	06/30/91	
III.A.1.3(1)	Workers	R. Riggs	OIE/DEPER/EPB	NOTE 3(b)	2	06/30/91	NA
III.A.1.3(2)	Public	R. Riggs	OIE/DEPER/EPB	NOTE 3(b)	2	06/30/91	NA
III.A.2	Improving Licensee Emergency Preparedness - Long-Term						
III.A.2.1	Amend 10 CFR 50 and 10 CFR 50, Appendix E	-	-	-			
III.A.2.1(1)	Publish Proposed Amendments to the Rules	-	RES	NOTE 3(a)		12/31/94	NA
III.A.2.1(2)	Conduct Public Regional Meetings	-	RES	NOTE 3(b)		12/31/94	NA
III.A.2.1(3)	Prepare Final Commission Paper Recommending Adoption of Rules	-	RES	NOTE 3(b)		12/31/94	NA
III.A.2.1(4)	Revise Inspection Program to Cover Upgraded Requirements	-	OIE	I			F-67
III.A.2.2	Development of Guidance and Criteria	-	NRR/DL	I			F-68
III.A.3	Improving NRC Emergency Preparedness						
III.A.3.1	NRC Role in Responding to Nuclear Emergencies	-	-	-			
III.A.3.1(1)	Define NRC Role in Emergency Situations	R. Riggs	OIE/DEPER/IRDB	NOTE 3(b)	1	06/30/85	NA
III.A.3.1(2)	Revise and Upgrade Plans and Procedures for the NRC Emergency Operations Center	R. Riggs	OIE/DEPER/IRDB	NOTE 3(b)	1	06/30/85	NA
III.A.3.1(3)	Revise Manual Chapter 0502, Other Agency Procedures, and NUREG-0610	R. Riggs	OIE/DEPER/IRDB	NOTE 3(b)	1	06/30/85	NA
III.A.3.1(4)	Prepare Commission Paper	R. Riggs	OIE/DEPER/IRDB	NOTE 3(b)	1	06/30/85	NA
III.A.3.1(5)	Revise Implementing Procedures and Instructions for Regional Offices	R. Riggs	OIE/DEPER/IRDB	NOTE 3(b)	1	06/30/85	NA
III.A.3.2	Improve Operations Centers	R. Riggs	OIE/DEPER/IRDB	NOTE 3(b)	1	06/30/85	NA
III.A.3.3	Communications	-	-	-			
III.A.3.3(1)	Install Direct Dedicated Telephone Lines	J. Pittman	OIE/DEPER/IRDB	NOTE 3(a)	1	06/30/85	NA
III.A.3.3(2)	Obtain Dedicated, Short-Range Radio Communication Systems	J. Pittman	OIE/DEPER/IRDB	NOTE 3(a)	1	06/30/85	NA

Table II (Continued)

Action Plan Item/ Issue No.	Title	Priority Analyst	Lead Office/ Division/ Branch	Safety Priority Ranking	Latest Rev.	Latest Issuance Date	MPA No.
III.A.3.4	Nuclear Data Link	D. Thatcher	OIE/DEPER/IRDB	NOTE 3(b)	1	06/30/85	
III.A.3.5	Training, Drills, and Tests	J. Pittman	OIE/DEPER/IRDB	NOTE 3(b)	1	06/30/85	NA
III.A.3.6	Interaction of NRC and Other Agencies	-	-	-			
III.A.3.6(1)	International	J. Pittman	OIE/DEPER/EPLB	NOTE 3(b)	1	06/30/85	NA
III.A.3.6(2)	Federal	J. Pittman	OIE/DEPER/EPLB	NOTE 3(b)	1	06/30/85	NA
III.A.3.6(3)	State and Local	J. Pittman	OIE/DEPER/EPLB	NOTE 3(b)	1	06/30/85	NA
III.B	EMERGENCY PREPAREDNESS OF STATE AND LOCAL GOVERNMENTS						
III.B.1	Transfer of Responsibilities to FEMA	W. Milstead	OIE/DEPER/IRDB	NOTE 3(b)		11/30/83	NA
III.B.2	Implementation of NRC and FEMA Responsibilities	-	-	-			
III.B.2(1)	The Licensing Process	W. Milstead	OIE/DEPER/IRDB	NOTE 3(b)		11/30/83	NA
III.B.2(2)	Federal Guidance	W. Milstead	OIE/DEPER/IRDB	NOTE 3(b)		11/30/83	NA
III.C	PUBLIC INFORMATION						
III.C.1	Have Information Available for the News Media and the Public	-	-	-			
III.C.1(1)	Review Publicly Available Documents	J. Pittman	PA	LI (NOTE 3)		11/30/83	NA
III.C.1(2)	Recommend Publication of Additional Information	J. Pittman	PA	LI (NOTE 3)		11/30/83	NA
III.C.1(3)	Program of Seminars for News Media Personnel	J. Pittman	PA	LI (NOTE 3)		11/30/83	NA
III.C.2	Develop Policy and Provide Training for Interfacing With the News Media	-	-	-			
III.C.2(1)	Develop Policy and Procedures for Dealing With Briefing Requests	J. Pittman	PA	LI (NOTE 3)		11/30/83	NA
III.C.2(2)	Provide Training for Members of the Technical Staff	J. Pittman	PA	LI (NOTE 3)		11/30/83	NA
III.D	RADIATION PROTECTION						
III.D.1	Radiation Source Control						
III.D.1.1	Primary Coolant Sources Outside the Containment Structure	-	-	-			
III.D.1.1(1)	Review Information Submitted by Licensees Pertaining to Reducing Leakage from Operating Systems	-	NRR	I	1	12/31/88	
III.D.1.1(2)	Review Information on Provisions for Leak Detection	R. Emrit	RES/DRA/ARGIB	DROP	1	12/31/88	
III.D.1.1(3)	Develop Proposed System Acceptance Criteria	R. Emrit	RES/DRA/ARGIB	DROP	1	12/31/88	
III.D.1.2	Radioactive Gas Management	R. Emrit	NRR/DSI/METB	DROP	1	12/31/88	NA
III.D.1.3	Ventilation System and Radioiodine Adsorber Criteria	-	-	-			
III.D.1.3(1)	Decide Whether Licensees Should Perform Studies and Make Modifications	R. Emrit	NRR/DSI/METB	DROP	1	12/31/88	NA

Table II (Continued)

Action Plan Item/ Issue No.	Title	Priority Analyst	Lead Office/ Division/ Branch	Safety Priority Ranking	Latest Rev.	Latest Issuance Date	MPA No.
III.D.1.3(2)	Review and Revise SRP	R. Emrit	NRR/DSI/METB	DROP	1	12/31/88	NA
III.D.1.3(3)	Require Licensees to Upgrade Filtration Systems	R. Emrit	NRR/DSI/METB	DROP	1	12/31/88	NA
III.D.1.3(4)	Sponsor Studies to Evaluate Charcoal Adsorber	R. Emrit	NRR/DSI/METB	NOTE 3(b)	1	12/31/88	NA
III.D.1.4	Radwaste System Design Features to Aid in Accident Recovery and Decontamination	R. Emrit	NRR/DSI/METB	DROP	1	12/31/88	NA
III.D.2	Public Radiation Protection Improvement						
III.D.2.1	Radiological Monitoring of Effluents	-	-	-			
III.D.2.1(1)	Evaluate the Feasibility and Perform a Value-Impact Analysis of Modifying Effluent-Monitoring Design Criteria	R. Emrit	NRR/DSI/METB	LOW	3	12/31/98	NA
III.D.2.1(2)	Study the Feasibility of Requiring the Development of Effective Means for Monitoring and Sampling Noble Gases and Radioiodine Released to the Atmosphere	R. Emrit	NRR/DSI/METB	LOW	3	12/31/98	NA
III.D.2.1(3)	Revise Regulatory Guides	R. Emrit	NRR/DSI/METB	LOW	3	12/31/98	NA
III.D.2.2	Radioiodine, Carbon-14, and Tritium Pathway Dose Analysis	-	-	-			
III.D.2.2(1)	Perform Study of Radioiodine, Carbon-14, and Tritium Behavior	R. Emrit	NRR/DSI/RAB	NOTE 3(b)	3	12/31/98	NA
III.D.2.2(2)	Evaluate Data Collected at Quad Cities	R. Emrit	NRR/DSI/RAB	III.D.2.5	3	12/31/98	NA
III.D.2.2(3)	Determine the Distribution of the Chemical Species of Radioiodine in Air-Water-Steam Mixtures	R. Emrit	NRR/DSI/RAB	III.D.2.5	3	12/31/98	NA
III.D.2.2(4)	Revise SRP and Regulatory Guides	R. Emrit	NRR/DSI/RAB	III.D.2.5	3	12/31/98	NA
III.D.2.3	Liquid Pathway Radiological Control	-	-	-			
III.D.2.3(1)	Develop Procedures to Discriminate Between Sites/Plants	R. Emrit	NRR/DE/EHEB	NOTE 3(b)	3	12/31/98	NA
III.D.2.3(2)	Discriminate Between Sites and Plants That Require Consideration of Liquid Pathway Interdiction Techniques	R. Emrit	NRR/DE/EHEB	NOTE 3(b)	3	12/31/98	NA
III.D.2.3(3)	Establish Feasible Method of Pathway Interdiction	R. Emrit	NRR/DE/EHEB	NOTE 3(b)	3	12/31/98	NA
III.D.2.3(4)	Prepare a Summary Assessment	R. Emrit	NRR/DE/EHEB	NOTE 3(b)	3	12/31/98	NA
III.D.2.4	Offsite Dose Measurements	-	-	-			
III.D.2.4(1)	Study Feasibility of Environmental Monitors	H. Vandermolen	NRR/DSI/RAB	NOTE 3(b)	3	12/31/98	NA
III.D.2.4(2)	Place 50 TLDs Around Each Site	H. Vandermolen	OIE/DRP/ORPB	LI (NOTE 3)	3	12/31/98	NA
III.D.2.5	Offsite Dose Calculation Manual	H. Vandermolen	NRR/DSI/RAB	NOTE 3(b)	3	12/31/98	NA
III.D.2.6	Independent Radiological Measurements	H. Vandermolen	OIE/DRP/ORPB	LI (NOTE 3)	3	12/31/98	NA
III.D.3	Worker Radiation Protection Improvement						
III.D.3.1	Radiation Protection Plans	H. Vandermolen	NRR/DSI/RAB	NOTE 3(b)	3	12/31/87	NA
III.D.3.2	Health Physics Improvements	-	-	-			
III.D.3.2(1)	Amend 10 CFR 20	H. Vandermolen	RES/DFO/ORPBR	LI (NOTE 3)	3	12/31/87	NA
III.D.3.2(2)	Issue a Regulatory Guide	H. Vandermolen	RES/DFO/ORPBR	LI (NOTE 3)	3	12/31/87	NA

Table II (Continued)

Action Plan Item/ Issue No.	Title	Priority Analyst	Lead Office/ Division/ Branch	Safety Priority Ranking	Latest Rev.	Latest Issuance Date	MPA No.
III.D.3.2(3)	Develop Standard Performance Criteria	H. Vandermolen	RES/DFO/ORPBR	LI (NOTE 3)	3	12/31/87	NA
III.D.3.2(4)	Develop Method for Testing and Certifying Air-Purifying Respirators	H. Vandermolen	RES/DFO/ORPBR	LI (NOTE 3)	3	12/31/87	NA
III.D.3.3	In-plant Radiation Monitoring	-	-	-			
III.D.3.3(1)	Issue Letter Requiring Improved Radiation Sampling Instrumentation	-	NRR/DL	I	2	12/31/86	F-69
III.D.3.3(2)	Set Criteria Requiring Licensees to Evaluate Need for Additional Survey Equipment	-	NRR	NOTE 3(a)	2	12/31/86	NA
III.D.3.3(3)	Issue a Rule Change Providing Acceptable Methods for Calibration of Radiation-Monitoring Instruments	-	RES	NOTE 3(a)	2	12/31/86	NA
III.D.3.3(4)	Issue a Regulatory Guide	-	RES	NOTE 3(a)	2	12/31/86	NA
III.D.3.4	Control Room Habitability	-	NRR/DL	I	2	12/31/86	F-70
III.D.3.5	Radiation Worker Exposure	-	-	-			
III.D.3.5(1)	Develop Format for Data To Be Collected by Utilities Regarding Total Radiation Exposure to Workers	H. Vandermolen	DFO/ORPBR	LI (NOTE 3)	2	12/31/86	NA
III.D.3.5(2)	Investigative Methods of Obtaining Employee Health Data by Nonlegislative Means	H. Vandermolen	DFO/ORPBR	LI (NOTE 3)	2	12/31/86	NA
III.D.3.5(3)	Revise 10 CFR 20	H. Vandermolen	DFO/ORPBR	LI (NOTE 3)	2	12/31/86	NA
IV.A	STRENGTHEN ENFORCEMENT PROCESS						
IV.A.1	Seek Legislative Authority	R. Emrit	GC	LI (NOTE 3)		11/30/83	NA
IV.A.2	Revise Enforcement Policy	R. Emrit	OIE/ES	LI (NOTE 3)		11/30/83	NA
IV.B	ISSUANCE OF INSTRUCTIONS AND INFORMATION TO LICENSEES						
IV.B.1	Revise Practices for Issuance of Instructions and Information to Licensees	R. Emrit	OIE/DEPER	LI (NOTE 3)		11/30/83	NA
IV.C	EXTEND LESSONS LEARNED TO LICENSED ACTIVITIES OTHER THAN POWER REACTORS						
IV.C.1	Extend Lessons Learned from TMI to Other NRC Programs	R. Emrit	NMSS/WM	NOTE 3(b)		11/30/83	NA
IV.D	NRC STAFF TRAINING						
IV.D.1	NRC Staff Training	R. Emrit	ADM/MDTS	LI (NOTE 3)		11/30/83	NA

Table II (Continued)

Action Plan Item/ Issue No.	Title	Priority Analyst	Lead Office/ Division/ Branch	Safety Priority Ranking	Latest Rev.	Latest Issuance Date	MPA No.
IV.E	SAFETY DECISION-MAKING						
IV.E.1	Expand Research on Quantification of Safety Decision-Making	R. Colmar	RES/DRA/RABR	LI (NOTE 3)	2	12/31/86	NA
IV.E.2	Plan for Early Resolution of Safety Issues	R. Emrit	NRR/DST/SPEB	LI (NOTE 3)	2	12/31/86	NA
IV.E.3	Plan for Resolving Issues at the CP Stage	R. Colmar	RES/DRA/RABR	LI (NOTE 5)	2	12/31/86	NA
IV.E.4	Resolve Generic Issues by Rulemaking	R. Colmar	RES/DRA/RABR	LI (NOTE 3)	2	12/31/86	NA
IV.E.5	Assess Currently Operating Reactors	P. Matthews	NRR/DL/SEPB	NOTE 3(b)	2	12/31/86	NA
IV.F	FINANCIAL DISINCENTIVES TO SAFETY						
IV.F.1	Increased OIE Scrutiny of the Power-Ascension Test Program	D. Thatcher	OIE/DQASIP	NOTE 3(b)	1	12/31/86	NA
IV.F.2	Evaluate the Impacts of Financial Disincentives to the Safety of Nuclear Power Plants	P. Matthews	SP	NOTE 3(b)	1	12/31/86	NA
IV.G	IMPROVE SAFETY RULEMAKING PROCEDURES						
IV.G.1	Develop a Public Agenda for Rulemaking	R. Emrit	ADM/RPB	LI (NOTE 3)	1	12/31/86	NA
IV.G.2	Periodic and Systematic Reevaluation of Existing Rules	W. Milstead	RES/DRA/RABR	LI (NOTE 3)	1	12/31/86	NA
IV.G.3	Improve Rulemaking Procedures	W. Milstead	RES/DRA/RABR	LI (NOTE 3)	1	12/31/86	NA
IV.G.4	Study Alternatives for Improved Rulemaking Process	W. Milstead	RES/DRA/RABR	LI (NOTE 3)	1	12/31/86	NA
IV.H	NRC PARTICIPATION IN THE RADIATION POLICY COUNCIL						
IV.H.1	NRC Participation in the Radiation Policy Council	G. Sege	RES/DHSWM/HEBR	LI (NOTE 3)		11/30/83	NA
V.A	DEVELOPMENT OF SAFETY POLICY						
V.A.1	Develop NRC Policy Statement on Safety	R. Emrit	GC	LI (NOTE 3)		12/31/86	NA
V.B	POSSIBLE ELIMINATION OF NONSAFETY RESPONSIBILITIES						
V.B.1	Study and Recommend, as Appropriate, Elimination of Nonsafety Responsibilities	R. Emrit	GC	LI (NOTE 3)		12/31/86	NA

Table II (Continued)

Action Plan Item/ Issue No.	Title	Priority Analyst	Lead Office/ Division/ Branch	Safety Priority Ranking	Latest Rev.	Latest Issuance Date	MPA No.
V.C	ADVISORY COMMITTEES						
V.C.1	Strengthen the Role of Advisory Committee on Reactor Safeguards	R. Emrit	GC	LI (NOTE 3)		12/31/86	NA
V.C.2	Study Need for Additional Advisory Committees	R. Emrit	GC	LI (NOTE 3)		12/31/86	NA
V.C.3	Study the Need to Establish an Independent Nuclear Safety Board	R. Emrit	GC	LI (NOTE 3)		12/31/86	NA
V.D	LICENSING PROCESS						
V.D.1	Improve Public and Intervenor Participation in the Hearing Process	R. Emrit	GC	LI (NOTE 3)		12/31/86	NA
V.D.2	Study Construction-During-Adjudication Rules	R. Emrit	GC	LI (NOTE 5)		12/31/86	NA
V.D.3	Reexamine Commission Role in Adjudication	R. Emrit	GC	LI (NOTE 5)		12/31/86	NA
V.D.4	Study the Reform of the Licensing Process	R. Emrit	GC	LI (NOTE 5)		12/31/86	NA
V.E	LEGISLATIVE NEEDS						
V.E.1	Study the Need for TMI-Related Legislation	R. Emrit	GC	LI (NOTE 5)		12/31/86	NA
V.F	ORGANIZATION AND MANAGEMENT						
V.F.1	Study NRC Top Management Structure and Process	R. Emrit	GC	LI (NOTE 3)		12/31/86	NA
V.F.2	Reexamine Organization and Functions of the NRC Offices	R. Emrit	GC	LI (NOTE 3)		12/31/86	NA
V.F.3	Revise Delegations of Authority to Staff	R. Emrit	GC	LI (NOTE 3)		12/31/86	NA
V.F.4	Clarify and Strengthen the Respective Roles of Chairman, Commission, and Executive Director for Operations	R. Emrit	GC	LI (NOTE 3)		12/31/86	NA
V.F.5	Authority to Delegate Emergency Response Functions to a Single Commissioner	R. Emrit	GC	LI (NOTE 3)		12/31/86	NA
V.G	CONSOLIDATION OF NRC LOCATIONS						
V.G.1	Achieve Single Location, Long-Term	R. Emrit	GC	LI (NOTE 3)		12/31/86	NA
V.G.2	Achieve Single Location, Interim	R. Emrit	GC	LI (NOTE 3)		12/31/86	NA
	TASK ACTION PLAN ITEMS						
A-1	Water Hammer (former USI)	R. Emrit	NRR/DST/GIB	NOTE 3(a)	1	06/30/85	NA
A-2	Asymmetric Blowdown Loads on Reactor Primary Coolant Systems (former USI)	R. Emrit	NRR/DST/GIB	NOTE 3(a)	1	06/30/85	D-10

Table II (Continued)

Action Plan Item/ Issue No.	Title	Priority Analyst	Lead Office/ Division/ Branch	Safety Priority Ranking	Latest Rev.	Latest Issuance Date	MPA No.
A-3	Westinghouse Steam Generator Tube Integrity (former USI)	R. Emrit	NRR/DEST/EMTB	NOTE 3(a)	1	12/31/88	
A-4	CE Steam Generator Tube Integrity (former USI)	R. Emrit	NRR/DEST/EMTB	NOTE 3(a)	1	12/31/88	
A-5	B&W Steam Generator Tube Integrity (former USI)	R. Emrit	NRR/DEST/EMTB	NOTE 3(a)	1	12/31/88	
A-6	Mark I Short-Term Program (former USI)	R. Emrit	NRR/DST/GIB	NOTE 3(a)	1	06/30/85	
A-7	Mark I Long-Term Program (former USI)	R. Emrit	NRR/DST/GIB	NOTE 3(a)	1	06/30/85	D-01
A-8	Mark II Containment Pool Dyanmic Loads Long-Term Program (former USI)	R. Emrit	NRR/DST/GIB	NOTE 3(a)	1	06/30/85	NA
A-9	ATWS (former USI)	R. Emrit	NRR/DST/GIB	NOTE 3(a)	1	06/30/85	
A-10	BWR Feedwater Nozzle Cracking (former USI)	R. Emrit	NRR/DST/GIB	NOTE 3(a)	1	06/30/85	B-25
A-11	Reactor Vessel Materials Toughness (former USI)	R. Emrit	NRR/DST/GIB	NOTE 3(a)	1	06/30/85	
A-12	Fracture Toughness of Steam Generator and Reactor Coolant Pump Supports (former USI)	R. Emrit	NRR/DST/GIB	NOTE 3(a)	1	06/30/85	NA
A-13	Snubber Operability Assurance	R. Emrit	NRR/DE/MEB	NOTE 3(a)	1	06/30/91	B-17, B-22
A-14	Flaw Detection	P. Matthews	NRR/DE/MTEB	DROP		11/30/83	NA
A-15	Primary Coolant System Decontamination and Steam Generator Chemical Cleaning	J. Pittman	NRR/DE/CHEB	NOTE 3(b)		11/30/83	NA
A-16	Steam Effects on BWR Core Spray Distribution	R. Emrit	NRR/DSI/CPB	NOTE 3(a)		11/30/83	D-12
A-17	Systems Interactions in Nuclear Power Plants (former (USI)	R. Emrit	RES/DSIR/EIB	NOTE 3(b)	1	12/31/89	NA
A-18	Pipe Rupture Design Criteria	R. Emrit	NRR/DE/MEB	DROP		11/30/83	NA
A-19	Digital Computer Protection System	W. Milstead	RES/DSR/HFB	LI (NOTE 5)	1	06/30/91	NA
A-20	Impacts of the Coal Fuel Cycle	-	NRR/DE/EHEB	LI (NOTE 5)		11/30/83	NA
A-21	Main Steamline Break Inside Containment - Evaluation of Environmental Conditions for Equipment Qualification	H. Vandermolen	NRR/DSI/CSB	DROP	1	12/31/98	NA
A-22	PWR Main Steamline Break - Core, Reactor Vessel and Containment Building Response	V'Molen	NRR/DSI/CSB	DROP		11/30/83	NA
A-23	Containment Leak Testing	P. Matthews	NRR/DSI/CSB	RI (NOTE 5)		11/30/83	
A-24	Qualification of Class 1E Safety-Related Equipment (former USI)	R. Emrit	NRR/DST/GIB	NOTE 3(a)	1	06/30/85	B-60
A-25	Non-Safety Loads on Class 1E Power Sources	D. Thatcher	NRR/DSI/PSB	NOTE 3(a)		11/30/83	
A-26	Reactor Vessel Pressure Transient Protection (former (USI)	R. Emrit	NRR/DST/GIB	NOTE 3(a)	1	06/30/85	B-04
A-27	Reload Applications	-	NRR/DSI/CPB	LI (NOTE 5)		11/30/83	NA
A-28	Increase in Spent Fuel Pool Storage Capacity	R. Colmar	NRR/DE/SGEB	NOTE 3(a)		11/30/83	
A-29	Nuclear Power Plant Design for the Reduction of Vulnerability to Industrial Sabotage	R. Colmar	RES/DRPS/RPSI	NOTE 3(b)	1	12/31/89	NA
A-30	Adequacy of Safety-Related DC Power Supplies	G. Sege	NRR/DSI/PSB	128	1	12/31/86	NA
A-31	RHR Shutdown Requirements (former USI)	R. Emrit	NRR/DST/GIB	NOTE 3(a)	1	06/30/85	
A-32	Missile Effects	J. Pittman	NRR/DE/MTEB	A-37, A-38, B-68		11/30/83	NA

Table II (Continued)

Action Plan Item/ Issue No.	Title	Priority Analyst	Lead Office/ Division/ Branch	Safety Priority Ranking	Latest Rev.	Latest Issuance Date	MPA No.
A-33	NEPA Review of Accident Risks	-	NRR/DSI/AEB	EI(NOTE 3)		11/30/83	NA
A-34	Instruments for Monitoring Radiation and Process Variables During Accidents	V'Molen	NRR/DSI/ICSB	II.F.3		11/30/83	NA
A-35	Adequacy of Offsite Power Systems	R. Emrit	NRR/DSI/PSB	NOTE 3(a)	1	12/31/94	B-23
A-36	Control of Heavy Loads Near Spent Fuel (former USI)	R. Emrit	NRR/DSI/GIB	NOTE 3(a)	2	06/30/04	C-10, C-15
A-37	Turbine Missiles	J. Pittman	NRR/DE/MTEB	DROP		11/30/83	NA
A-38	Tornado Missiles	G. Sege	NRR/DSI/ASB	DROP	3	06/30/00	NA
A-39	Determination of Safety Relief Valve Pool Dynamic Loads and Temperature Limits (former USI)	R. Emrit	NRR/DST/GIB	NOTE 3(a)	1	06/30/85	
A-40	Seismic Design Criteria (former USI)	R. Emrit	RES/DSIR/EIB	NOTE 3(a)	1	12/31/89	NA
A-41	Long-Term Seismic Program	L. Riani	NRR/DE/MEB	NOTE 3(b)	1	12/31/84	NA
A-42	Pipe Cracks in Boiling Water Reactors (former USI)	R. Emrit	NRR/DST/GIB	NOTE 3(a)	1	06/30/85	B-05
A-43	Containment Emergency Sump Performance (former USI)	R. Emrit	NRR/DST/GIB	NOTE 3(a)	1	12/31/87	
A-44	Station Blackout (former USI)	R. Emrit	RES/DRPS/RPSI	NOTE 3(a)	1	06/30/88	
A-45	Shutdown Decay Heat Removal Requirements (former USI)	R. Emrit	RES/DRPS/RPSI	NOTE 3(b)	1	12/31/88	NA
A-46	Seismic Qualification of Equipment in Operating Plants (former USI)	R. Emrit	NRR/DSRO/EIB	NOTE 3(a)	2	06/30/00	
A-47	Safety Implications of Control Systems (former USI)	R. Emrit	RES/DSIR/EIB	NOTE 3(a)	1	12/31/89	
A-48	Hydrogen Control Measures and Effects of Hydrogen Burns on Safety Equipment	R. Emrit	NRR/DSIR/SAIB	NOTE 3(a)	1	06/30/89	
A-49	Pressurized Thermal Shock (former USI)	R. Emrit	NRR/DSRO/RSIB	NOTE 3(a)	1	12/31/87	A-21
B-1	Environmental Technical Specifications	-	NRR/DE/EHEB	EI (NOTE 3)		11/30/83	NA
B-2	Forecasting Electricity Demand	-	NRR	EI (NOTE 3)		11/30/83	NA
B-3	Event Categorization	-	NRR/DSI/RSB	LI (NOTE 3)		11/30/83	NA
B-4	ECCS Reliability	R. Emrit	NRR/DSI/RSB	II.E.3.2		11/30/83	NA
B-5	Ductility of Two-Way Slabs and Shells and Buckling Behavior of Steel Containments	D. Thatcher	RES/DE/EIB	NOTE 3(b)	1	06/30/88	NA
B-6	Loads, Load Combinations, Stress Limits	J. Pittman	NRR/DSRO/EIB	119.1		12/31/87	NA
B-7	Secondary Accident Consequence Modeling	-	NRR/DSI/AEB	LI (NOTE 3)		11/30/83	NA
B-8	Locking Out of ECCS Power Operated Valves	R. Riggs	NRR/DSI/RSB	DROP	1	12/31/94	NA
B-9	Electrical Cable Penetrations of Containment	R. Emrit	NRR/DSI/PSB	NOTE 3(b)		11/30/83	NA
B-10	Behavior of BWR Mark III Containments	H. Vandermolen	NRR/DSI/CSB	NOTE 3(a)	1	12/31/84	NA
B-11	Subcompartment Standard Problems	-	NRR/DSI/CSB	LI (NOTE 5)		11/30/83	NA
B-12	Containment Cooling Requirements (Non-LOCA)	R. Emrit	NRR/DSI/CSB	NOTE 3(b)	1	12/31/86	NA
B-13	Marviken Test Data Evaluation	-	NRR/DSI/CSB	LI (NOTE 5)		11/30/83	NA
B-14	Study of Hydrogen Mixing Capability in Containment Post-LOCA	R. Emrit	NRR/DST/GIB	A-48		11/30/83	NA
B-15	CONTEMPT Computer Code Maintenance	-	NRR/DSI/CSB	LI (NOTE 3)		11/30/83	NA
B-16	Protection Against Postulated Piping Failures in Fluid Systems Outside Containment	R. Emrit	NRR/DE/MEB	A-18		11/30/83	NA

Table II (Continued)

Action Plan Item/ Issue No.	Title	Priority Analyst	Lead Office/ Division/ Branch	Safety Priority Ranking	Latest Rev.	Latest Issuance Date	MPA No.
B-17	Criteria for Safety-Related Operator Actions	W. Milstead	RES/DST/CIHFB	NOTE 3(b)	3	06/30/00	
B-18	Vortex Suppression Requirements for Containment Sumps	R. Emrit	NRR/DST/GIB	A-43		11/30/83	NA
B-19	Thermal-Hydraulic Stability	L. Riani	NRR/DSI/CPB	NOTE 3(b)		06/30/85	NA
B-20	Standard Problem Analysis	-	RES/DAE/AMBR	LI (NOTE 5)		11/30/83	
B-21	Core Physics	-	NRR/DSI/CPB	LI (NOTE 3)		11/30/83	NA
B-22	LWR Fuel	R. Emrit	RES/DSIR/RPSIB	DROP	2	06/30/95	NA
B-23	LMFBR Fuel	-	NRR/DSI/CPB	LI (NOTE 3)		11/30/83	NA
B-24	Seismic Qualification of Electrical and Mechanical Equipment	R. Emrit	NRR	A-46		11/30/83	NA
B-25	Piping Benchmark Problems	-	NRR/DE/MEB	LI (NOTE 5)		11/30/83	
B-26	Structural Integrity of Containment Penetrations	R. Riggs	NRR/DE/MTEB	NOTE 3(b)	1	12/31/84	NA
B-27	Implementation and Use of Subsection NF	-	NRR/DE/MEB	LI (NOTE 5)		11/30/83	
B-28	Radionuclide/Sediment Transport Program	-	NRR/DE/EHEB	EI (NOTE 3)		11/30/83	NA
B-29	Effectiveness of Ultimate Heat Sinks	J. Pittman	NRR/DE/EHEB	LI (NOTE 3)	1	06/30/91	NA
B-30	Design Basis Floods and Probability	-	NRR/DE/EHEB	LI (NOTE 5)		11/30/83	
B-31	Dam Failure Model	W. Milstead	NRR/DE/SGEB	LI (NOTE 3)	1	06/30/89	NA
B-32	Ice Effects on Safety-Related Water Supplies	J. Pittman	NRR/DE/EHEB	153	1	06/30/91	NA
B-33	Dose Assessment Methodology	-	NRR/DSI/RAB	LI (NOTE 3)		11/30/83	NA
B-34	Occupational Radiation Exposure Reduction	R. Emrit	NRR/DSI/RAB	III.D.3.1		11/30/83	NA
B-35	Confirmation of Appendix I Models for Calculations of Releases of Radioactive Materials in Gaseous and Liquid Effluents from Light Water Cooled Power Reactors	-	NRR/DSI/METB	LI (NOTE 5)		11/30/83	
B-36	Develop Design, Testing, and Maintenance Criteria for Atmosphere Cleanup System Air Filtration and Adsorption Units for Engineered Safety Feature Systems and for Normal Ventilation Systems	R. Emrit	NRR/DSI/METB	NOTE 3(a)		11/30/83	
B-37	Chemical Discharges to Receiving Waters	-	NRR/DE/EHEB	EI (NOTE 5)		11/30/83	
B-38	Reconnaissance Level Investigations	-	NRR/DE/EHEB	EI (NOTE 3)		11/30/83	NA
B-39	Transmission Lines	-	NRR/DE/EHEB	EI (NOTE 3)		11/30/83	NA
B-40	Effects of Power Plant Entrainment on Plankton	-	NRR/DE/EHEB	EI (NOTE 3)		11/30/83	NA
B-41	Impacts on Fisheries	-	NRR/DE/EHEB	EI (NOTE 3)		11/30/83	NA
B-42	Socioeconomic Environmental Impacts	-	NRR/DE/SAB	EI (NOTE 3)		11/30/83	NA
B-43	Value of Aerial Photographs for Site Evaluation	-	NRR/DE/EHEB	EI (NOTE 5)		11/30/83	
B-44	Forecasts of Generating Costs of Coal and Nuclear Plants	-	NRR/DE/SAB	EI (NOTE 3)		11/30/83	NA
B-45	Need for Power - Energy Conservation	-	NRR/DE/SAB	EI (NOTE 3)		11/30/83	NA
B-46	Cost of Alternatives in Environmental Design	-	NRR/DE/SAB	EI (NOTE 3)		11/30/83	NA
B-47	Inservice Inspection of Supports-Classes 1, 2, 3, and MC Components	L. Riani	NRR/DE/MTEB	DROP		11/30/83	NA
B-48	BWR Control Rod Drive Mechanical Failures	R. Emrit	NRR/DE/MTEB	NOTE 3(b)		11/30/83	
B-49	Inservice Inspection Criteria and Corrosion Prevention Criteria for Containments	-	NRR	LI (NOTE 5)		11/30/83	

Table II (Continued)

Action Plan Item/ Issue No.	Title	Priority Analyst	Lead Office/ Division/ Branch	Safety Priority Ranking	Latest Rev.	Latest Issuance Date	MPA No.
B-50	Post-Operating Basis Earthquake Inspection	L. Riani	NRR/DE/SGEB	RI (NOTE 3)	1	06/30/85	NA
B-51	Assessment of Inelastic Analysis Techniques for Equipment and Components	R. Emrit	NRR/DE/MEB	A-40		11/30/83	NA
B-52	Fuel Assembly Seismic and LOCA Responses	R. Emrit	NRR/DST/GIB	A-2		11/30/83	NA
B-53	Load Break Switch	G. Sege	NRR/DSI/PSB	RI (NOTE 3)		11/30/83	
B-54	Ice Condenser Containments	W. Milstead	NRR/DSI/CSB	NOTE 3(b)	1	12/31/84	NA
B-55	Improved Reliability of Target Rock Safety Relief Valves	H. Vandermolen	NRR/DE/EMEB	NOTE 3(b)	1	06/30/00	
B-56	Diesel Reliability	W. Milstead	RES/DRPS/RPSI	NOTE 3(a)	2	06/30/95	D-19
B-57	Station Blackout	R. Emrit	NRR/DST/GIB	A-44		11/30/83	
B-58	Passive Mechanical Failures	L. Riani	NRR/DE/EQB	NOTE 3(b)	1	12/31/85	NA
B-59	(N-1) Loop Operation in BWRs and PWRs	L. Riani	NRR/DSI/RSB	RI (NOTE 3)	1	06/30/85	E-04,E-05
B-60	Loose Parts Monitoring Systems	R. Emrit	NRR/DSI/CPB	NOTE 3(b)	1	12/31/84	NA
B-61	Allowable ECCS Equipment Outage Periods	J. Pittman	RES/DST/PRAB	NOTE 3(b)	1	06/30/00	
B-62	Reexamination of Technical Bases for Establishing SLs, LSSSs, and Reactor Protection System Trip Functions	-	NRR/DSI/CPB	LI (NOTE 3)		11/30/83	NA
B-63	Isolation of Low Pressure Systems Connected to the Reactor Coolant Pressure Boundary	R. Emrit	NRR/DE/MEB	NOTE 3(a)		11/30/83	B-45
B-64	Decommissioning of Reactors	L. Riani	RES/DE/MEB	NOTE 3(a)	2	06/30/95	NA
B-65	Iodine Spiking	W. Milstead	NRR/DSI/AEB	DROP	2	12/31/84	NA
B-66	Control Room Infiltration Measurements	P. Matthews	NRR/DSI/AEB	NOTE 3(a)		11/30/83	
B-67	Effluent and Process Monitoring Instrumentation	L. Riani	NRR/DSI/METB	III.D.2.1		11/30/83	NA
B-68	Pump Overspeed During LOCA	L. Riani	NRR/DSI/ASB	DROP		11/30/83	NA
B-69	ECCS Leakage Ex-Containment	L. Riani	NRR/DSI/METB	III.D.1.1(1)		11/30/83	NA
B-70	Power Grid Frequency Degradation and Effect on Primary Coolant Pumps	R. Emrit	NRR/DSI/PSB	NOTE 3(b)		11/30/83	
B-71	Incident Response	L. Riani	NRR	III.A.3.1		11/30/83	NA
B-72	Health Effects and Life Shortening from Uranium and - Coal Fuel Cycles		NRR/DSI/RAB	LI (NOTE 5)		11/30/83	NA
B-73	Monitoring for Excessive Vibration Inside the Reactor Pressure Vessel	D. Thatcher	NRR/DE/MEB	C-12		11/30/83	NA
C-1	Assurance of Continuous Long Term Capability of Hermetic Seals on Instrumentation and Electrical Equipment	W. Milstead	NRR/DE/EQB	NOTE 3(a)		11/30/83	
C-2	Study of Containment Depressurization by Inadvertent Spray Operation to Determine Adequacy of Containment External Design Pressure	R. Emrit	NRR/DSI/CSB	NOTE 3(b)		11/30/83	NA
C-3	Insulation Usage Within Containment	R. Emrit	NRR/DST/GIB	A-43	1	06/30/91	NA
C-4	Statistical Methods for ECCS Analysis	R. Riggs	NRR/DSRO/SPEB	RI (NOTE 3)	1	06/30/86	NA
C-5	Decay Heat Update	R. Riggs	NRR/DSRO/SPEB	RI (NOTE 3)	1	06/30/86	NA
C-6	LOCA Heat Sources	R. Riggs	NRR/DSRO/SPEB	RI (NOTE 3)	1	06/30/86	NA
C-7	PWR System Piping	R. Emrit	NRR/DE/MTEB	NOTE 3(b)		11/30/83	NA

Table II (Continued)

Action Plan Item/ Issue No.	Title	Priority Analyst	Lead Office/ Division/ Branch	Safety Priority Ranking	Latest Rev.	Latest Issuance Date	MPA No.
C-8	Main Steam Line Leakage Control Systems	W. Milstead	RES/DRPS/RPSI	NOTE 3(b)	1	06/30/90	NA
C-9	RHR Heat Exchanger Tube Failures	V'Molen	NRR/DSI/RSB	DROP		11/30/83	NA
C-10	Effective Operation of Containment Sprays in a LOCA	R. Emrit	NRR/DSI/AEB	NOTE 3(a)		11/30/83	NA
C-11	Assessment of Failure and Reliability of Pumps and Valves	R. Emrit	NRR/DE/MEB	NOTE 3(b)		12/31/85	NA
C-12	Primary System Vibration Assessment	D. Thatcher	NRR/DE/MEB	NOTE 3(b)		11/30/83	NA
C-13	Non-Random Failures	R. Emrit	NRR/DST/GIB	A-17	1	06/30/91	NA
C-14	Storm Surge Model for Coastal Sites	R. Emrit	NRR/DE/EHEB	LI (NOTE 3)		06/30/88	NA
C-15	NUREG Report for Liquid Tank Failure Analysis	-	NRR/DE/EHEB	LI (NOTE 3)		11/30/83	NA
C-16	Assessment of Agricultural Land in Relation to Power Plant Siting and Cooling System Selection	-	NRR/DE/EHEB	EI (NOTE 3)		11/30/83	NA
C-17	Interim Acceptance Criteria for Solidification Agents for Radioactive Solid Wastes	R. Emrit	NRR/DSI/METB	NOTE 3(a)		11/30/83	NA
D-1	Advisability of a Seismic Scram	D. Thatcher	RES/DET/MSEB	DROP	1	12/31/98	NA
D-2	Emergency Core Cooling System Capability for Future Plants	R. Emrit	RES/DRA/ARGIB	DROP		12/31/88	NA
D-3	Control Rod Drop Accident	R. Emrit	NRR/DSI/CPB	NOTE 3(b)		11/30/83	NA
		NEW GENERIC ISSUES					
1.	Failures in Air-Monitoring, Air-Cleaning, and Ventilating Systems	R. Emrit	NRR/DSI/METB	DROP		11/30/83	NA
2.	Failure of Protective Devices on Essential Equipment	Diab	RES/DSIR/EIB	DROP	2	06/30/95	NA
3.	Set Point Drift in Instrumentation	R. Emrit	NRR/DSIR/RPSIB	NOTE 3(b)	1	06/30/86	NA
4.	End-of-Life and Maintenance Criteria	D. Thatcher	NRR/DE/EQB	NOTE 3(b)		11/30/83	NA
5.	Design Check and Audit of Balance-of-Plant Equipment	J. Pittman	NRR/DSI/ASB	I.F.1		11/30/83	NA
6	Separation of Control Rod from Its Drive and BWR High Rod Worth Events	H. Vandermolen	NRR/DSI/CPB	NOTE 3(b)	1	12/31/94	NA
7.	Failures Due to Flow-Induced Vibrations	H. Vandermolen	NRR/DSI/RSB	DROP	1	06/30/91	NA
8.	Inadvertent Actuation of Safety Injection in PWRs	L. Riani	NRR/DSI/RSB	I.C.1		11/30/83	NA
9.	Reevaluation of Reactor Coolant Pump Trip Criteria	R. Emrit	NRR/DSI/RSB	II.K.3(5)		11/30/83	NA
10.	Surveillance and Maintenance of TIP Isolation Valves and Squib Charges	R. Riggs	NRR/DSI/ICSB	DROP		11/30/83	NA
11.	Turbine Disc Cracking	J. Pittman	NRR/DE/MTEB	A-37		11/30/83	NA
12.	BWR Jet Pump Integrity	G. Sege	NRR/DE/MTEB, MEB	NOTE 3(b)	1	12/31/84	NA
13.	Small Break LOCA from Extended Overheating of Pressurizer Heaters	L. Riani	NRR/DSI/RSB	DROP		11/30/83	NA
14.	PWR Pipe Cracks	R. Emrit	NRR/DE/MTEB	NOTE 3(b)	2	12/31/94	NA
15.	Radiation Effects on Reactor Vessel Supports	R. Emrit	RES/DET/EMMEB	NOTE 3(b)	3	06/30/96	NA

Table II (Continued)

Action Plan Item/ Issue No.	Title	Priority Analyst	Lead Office/ Division/ Branch	Safety Priority Ranking	Latest Rev.	Latest Issuance Date	MPA No.
16.	BWR Main Steam Isolation Valve Leakage Control Systems	W. Milstead	NRR/DSI/ASB	C-8		11/30/83	NA
17.	Loss of Offsite Power Subsequent to a LOCA	L. Riani	NRR/DSI/PSB, ICSB	DROP		11/30/83	NA
18.	Steam Line Break with Consequential Small LOCA	R. Riggs	NRR/DSI/RSB	I.C.1		11/30/83	NA
19.	Safety Implications of Nonsafety Instrument and Control Power Supply Bus	G. Sege	NRR/DST/GIB	A-47		11/30/83	NA
20.	Effects of Electromagnetic Pulse on Nuclear Power Plants	D. Thatcher	NRR/DSI/ICSB	NOTE 3(b)	1	06/30/84	NA
21.	Vibration Qualification of Equipment	R. Riggs	NRR/DE/EIB	DROP	2	06/30/91	NA
22.	Inadvertent Boron Dilution Events	H. Vandermolen	NRR/DSI/RSB	NOTE 3(b)	2	12/31/94	NA
23.	Reactor Coolant Pump Seal Failures	R. Riggs	RES/DET/GSIB	NOTE 3(b)	1	06/30/00	NA
24.	Automatic ECCS Switchover to Recirculation	W. Milstead	RES/DET/GSIB	NOTE 3(b)	3	12/31/95	NA
25.	Automatic Air Header Dump on BWR Scram System	W. Milstead	NRR/DSI/RSB	NOTE 3(a)		11/30/83	
26.	Diesel Generator Loading Problems Related to SIS Reset on Loss of Offsite Power	R. Emrit	NRR/DSI/ASB	17		11/30/83	NA
27.	Manual vs. Automated Actions	J. Pittman	NRR/DSI/RSB	B-17		11/30/83	NA
28.	Pressurized Thermal Shock	R. Emrit	NRR/DST/GIB	A-49		11/30/83	NA
29.	Bolting Degradation or Failure in Nuclear Power Plants	H. Vandermolen	RES/DSIR/EIB	NOTE 3(b)	2	06/30/95	NA
30.	Potential Generator Missiles - Generator Rotor Retaining Rings	J. Pittman	NRR/DE/MEB	DROP	1	12/31/85	NA
31.	Natural Circulation Cooldown	R. Riggs	NRR/DSI/RSB	I.C.1		11/30/83	NA
32.	Flow Blockage in Essential Equipment Caused by Corbicula	R. Emrit	NRR/DSI/ASB	51		11/30/83	NA
33.	Correcting Atmospheric Dump Valve Opening Upon Loss of Integrated Control System Power	J. Pittman	NRR/DSI/ICSB	A-47		11/30/83	NA
34.	RCS Leak	R. Riggs	NRR/DHFS/PSRB	DROP	1	06/30/84	NA
35.	Degradation of Internal Appurtenances in LWRs	H. Vandermolen	NRR/DSI/CPB, RSB	DROP	2	12/31/98	NA
36.	Loss of Service Water	L. Riani	NRR/DSI/ASB, AEB, RSB	NOTE 3(b)	3	06/30/91	NA
37.	Steam Generator Overfill and Combined Primary and Secondary Blowdown	L. Riani	NRR/DST/GIB, NRR/DSI/RSB	A-47, I.C.1(2)	1	06/30/85	NA
38.	Potential Recirculation System Failure as a Consequence of Ingestion of Containment Paint Flakes or Other Fine Debris	R. Emrit	RES/DSIR/RPSIB	DROP	2	06/30/95	NA
39.	Potential for Unacceptable Interaction Between the CRD System and Non-Essential Control Air System	J. Pittman	NRR/DSI/ASB	25	1	06/30/95	NA
40.	Safety Concerns Associated with Pipe Breaks in the BWR Scram System	L. Riani	NRR/DSI/ASB	NOTE 3(a)	1	06/30/84	B-65
41.	BWR Scram Discharge Volume Systems	H. Vandermolen	NRR/DSI/RSB	NOTE 3(a)		11/30/83	B-58
42.	Combination Primary/Secondary System LOCA	R. Riggs	NRR/DSI/RSB	I.C.1	1	06/30/85	NA
43.	Reliability of Air Systems	W. Milstead	RES/DSIR/RPSI	NOTE 3(a)	2	12/31/88	B-107

Table II (Continued)

Action Plan Item/ Issue No.	Title	Priority Analyst	Lead Office/ Division/ Branch	Safety Priority Ranking	Latest Rev.	Latest Issuance Date	MPA No.
44.	Failure of Saltwater Cooling System	W. Milstead	NRR/DSI/ASB	43	1	12/31/88	NA
45.	Inoperability of Instrumentation Due to Extreme Cold Weather	W. Milstead	NRR/DSI/ICSB	NOTE 3(a)	2	06/30/91	
46.	Loss of 125 Volt DC Bus	G. Sege	NRR/DSI/PSB	76		11/30/83	NA
47.	Loss of Offsite Power	D. Thatcher	NRR/DSI/RSB, ASB	NOTE 3(b)		11/30/83	
48.	LCO for Class 1E Vital Instrument Buses in Operating Reactors	G. Sege	NRR/DSI/PSB	128	1	12/31/86	NA
49.	Interlocks and LCOs for Redundant Class 1E Tie-Breakers	G. Sege	NRR/DSI/PSB	128	3	06/30/91	NA
50.	Reactor Vessel Level Instrumentation in BWRs	D. Thatcher	NRR/DSI/RSB, ICSB	NOTE 3(b)	1	12/31/84	NA
51.	Proposed Requirements for Improving the Reliability of Open Cycle Service Water Systems	R. Emrit	RES/DE/EIB	NOTE 3(a)	1	12/31/89	L-913
52.	SSW Flow Blockage by Blue Mussels	R. Emrit	NRR/DSI/ASB	51		11/30/83	NA
53.	Consequences of a Postulated Flow Blockage Incident in a BWR	H. Vandermolen	NRR/DSI/CPB, RSB	DROP	1	12/31/84	NA
54.	Valve Operator-Related Events Occurring During 1978, 1979, and 1980	L. Riani	NRR/DE/MEB	II.E.6.1	1	06/30/85	NA
55.	Failure of Class 1E Safety-Related Switchgear Circuit Breakers to Close on Demand	R. Emrit	NRR/DSI/PSB	DROP	2	06/30/91	NA
56.	Abnormal Transient Operating Guidelines as Applied to a Steam Generator Overfill Event	L. Riani	NRR/DHFS/HFEB	A-47, I.D.1		11/30/83	NA
57.	Effects of Fire Protection System Actuation on Safety-Related Equipment	W. Milstead	RES/DRA/ARGIB	NOTE 3(b)	3	06/30/95	NA
58.	Inadvertent Containment Flooding	G. Sege	NRR/DSI/ASB, CSB	DROP		11/30/83	
59.	Technical Specification Requirements for Plant Shutdown when Equipment for Safe Shutdown is Degraded or Inoperable	R. Emrit	NRR/DST/TSIP	RI (NOTE 5)	1	06/30/85	NA
60.	Lamellar Tearing of Reactor Systems Structural Supports	L. Riani	NRR/DST/GIB	A-12		11/30/83	NA
61.	SRV Line Break Inside the BWR Wetwell Airspace of Mark I and II Containments	W. Milstead	NRR/DSI/CSB	NOTE 3(b)	2	12/31/86	NA
62.	Reactor Systems Bolting Applications	R. Riggs	RES/DSIR/EIB	29	1	12/31/88	NA
63.	Use of Equipment Not Classified as Essential to Safety in BWR Transient Analysis	J. Pittman	RES/DRA/ARGIB	DROP	1	06/30/90	NA
64.	Identification of Protection System Instrument Sensing Lines	D. Thatcher	NRR/DSI/ICSB	NOTE 3(b)		11/30/83	
65.	Probability of Core-Melt Due to Component Cooling Water System Failures	H. Vandermolen	NRR/DSI/ASB	23	1	12/31/86	NA
66.	Steam Generator Requirements	R. Riggs	NRR/DEST/EMTB	NOTE 3(b)	2	12/31/88	NA
67.	Steam Generator Staff Actions	-	-	-			

Table II (Continued)

Action Plan Item/ Issue No.	Title	Priority Analyst	Lead Office/ Division/ Branch	Safety Priority Ranking	Latest Rev.	Latest Issuance Date	MPA No.
67.2.1	Integrity of Steam Generator Tube Sleeves	R. Riggs	NRR/DE/MEB	135	4	06/30/94	NA
67.3.1	Steam Generator Overfill	R. Riggs	NRR/DST/GIB NRR/DSI/RSB	A-47, I.C.1	4	06/30/94	NA
67.3.2	Pressurized Thermal Shock	R. Riggs	NRR/DST/GIB	A-49	4	06/30/94	NA
67.3.3	Improved Accident Monitoring	R. Riggs	NRR/DSI/ICSB	NOTE 3(a)	4	06/30/94	A-17
67.3.4	Reactor Vessel Inventory Measurement	R. Riggs	NRR/DSI/CPB	II.F.2	4	06/30/94	NA
67.4.1	RCP Trip	R. Riggs	NRR/DSI/RSB	II.K.3(5)	4	06/30/94	G-01
67.4.2	Control Room Design Review	R. Riggs	NRR/DHFS/HFEB	I.D.1	4	06/30/94	F-08
67.4.3	Emergency Operating Procedures	R. Riggs	NRC/DHFS/PSRB	I.C.1	4	06/30/94	F-05
67.5.1	Reassessment of Radiological Consequences	R. Riggs	RES/DRPS/RPSI	LI (NOTE 3)	4	06/30/94	NA
67.5.2	Reevaluation of SGTR Design Basis	R. Riggs	RES/DRPS/RPSI	LI (67.5.1)	4	06/30/94	NA
67.5.3	Secondary System Isolation	R. Riggs	NRR/DSI/RSB	DROP	4	06/30/94	NA
67.6.0	Organizational Responses	R. Riggs	OIE/DEPER/IRDB	III.A.3	4	06/30/94	NA
67.7.0	Improved Eddy Current Tests	R. Riggs	RES/DE/EIB	135	4	06/30/94	NA
67.8.0	Denting Criteria	R. Riggs	NRR/DE/MTEB	135	4	06/30/94	NA
67.9.0	Reactor Coolant System Pressure Control	R. Riggs	NRR/DSI/GIB NRR/DSI/RSB	A-45, I.C.1 (2,3)	4	06/30/94	NA
67.10.0	Supplemental Tube Inspections	R. Riggs	NRR/DL/ORAB	LI (NOTE 5)	4	06/30/94	NA
68.	Postulated Loss of Auxiliary Feedwater System Resulting from Turbine-Driven Auxiliary Feedwater Pump Steam Supply Line Rupture	J. Pittman	NRR/DSI/ASB	124	3	06/30/91	NA
69.	Make-up Nozzle Cracking in B&W Plants	R. Colmar	NRR/DE/MEB, MTEB	NOTE 3(b)	1	12/31/84	B43
70.	PORV and Block Valve Reliability	R. Riggs	RES/DE/EIB	NOTE 3(a)	3	06/30/91	
71.	Failure of Resin Demineralizer Systems and Their Effects on Nuclear Power Plant Safety	J. Pittman	RES/DRA/ARGIB	DROP	3	06/30/01	NA
72.	Control Rod Drive Guide Tube Support Pin Failures	R. Riggs	RES	DROP	1	06/30/91	NA
73.	Detached Thermal Sleeves	R. Emrit	RES/DSIR/EIB	NOTE 3(a)	3	06/30/95	NA
74.	Reactor Coolant Activity Limits for Operating Reactors	W. Milstead	NRR/DSI/AEB	DROP	1	06/30/86	NA
75.	Generic Implications of ATWS Events at the Salem Nuclear Plant	R. Emrit	RES/DRA/ARGIB	NOTE 3(a)	1	06/30/90	B-76, B-77, B-78, B-79, B-80, B-81, B-82, B-85 B-86, B-87, B-88, B-89,

Table II (Continued)

Action Plan Item/ Issue No.	Title	Priority Analyst	Lead Office/ Division/ Branch	Safety Priority Ranking	Latest Rev.	Latest Issuance Date	MPA No.
75.	(Cont.)						B-90, B-91, B-92, B-93
76.	Instrumentation and Control Power Interactions	Zimmerman	RES/DSIR/EIB	DROP	3	06/30/95	NA
77.	Flooding of Safety Equipment Compartments by Back-flow Through Floor Drains	L. Riani	RES/DE/EIB	A-17		12/31/87	NA
78.	Monitoring of Fatigue Transient Limits for Reactor Coolant System	Rourk	RES/DET/GSIB	NOTE 3(b)	3	12/31/97	
79.	Unanalyzed Reactor Vessel Thermal Stress During Natural Convection Cooldown	L. Riani	RES/DSIR/EIB	NOTE 3(b)	3	06/30/95	NA
80.	Pipe Break Effects on Control Rod Drive Hydraulic Lines in the Drywells of BWR Mark I and II Containments	H. Vandermolen	RES/DSARE/REAHFB	CONTINUE	3	06/30/03	
81.	Impact of Locked Doors and Barriers on Plant and Personnel Safety	Rourk	RES/DSIR/EIB	LOW	4	06/30/95	NA
82.	Beyond Design Basis Accidents in Spent Fuel Pools	H. Vandermolen	RES/DRPS/RPSI	NOTE 3(b)	3	06/30/04	NA
83.	Control Room Habitability	R. Emrit	RES/DST/AEB	NOTE 3(b)	3	06/30/03	NA
84.	CE PORVs	R. Riggs	RES/DSIR/RPSI	NOTE 3(b)	2	06/30/90	NA
85.	Reliability of Vacuum Breakers Connected to Steam Discharge Lines Inside BWR Containments	W. Milstead	NRR/DSI/CSB	DROP	2	06/30/91	NA
86.	Long Range Plan for Dealing with Stress Corrosion Cracking in BWR Piping	R. Emrit	NRR/DEST/EMTB	NOTE 3(a)	1	06/30/88	B-84
87.	Failure of HPCI Steam Line Without Isolation	J. Pittman	RES/DSIR/EIB	NOTE 3(a)	2	06/30/95	
88.	Earthquakes and Emergency Planning	R. Riggs	RES/DRA/ARGIB	NOTE 3(b)		12/31/87	NA
89.	Stiff Pipe Clamps	T.Y. Chang	RES/DSIR/EIB	LOW	2	06/30/95	NA
90.	Technical Specifications for Anticipatory Trips	H. Vandermolen	NRR/DSI/RSB, ICSB	DROP	2	12/31/98	NA
91.	Main Crankshaft Failures in Transamerica DeLaval Emergency Diesel Generators	R. Emrit	RES/DRA/ARGIB	NOTE 3(b)		12/31/87	NA
92.	Fuel Crumbling During LOCA	H. Vandermolen	NRR/DSI/RSB, CPB	DROP	1	12/31/98	NA
93.	Steam Binding of Auxiliary Feedwater Pumps	J. Pittman	RES/DRPS/RPSI	NOTE 3(a)		06/30/88	B-98
94.	Additional Low Temperature Overpressure Protection for Light Water Reactors	J. Pittman	RES/DSIR/RPSI	NOTE 3(a)		06/30/90	
95.	Loss of Effective Volume for Containment Recirculation Spray	W. Milstead	RES/DRA/ARGIB	NOTE 3(b)		06/30/90	NA
96.	RHR Suction Valve Testing	W. Milstead	RES/DRA/ARGIB	105		06/30/90	NA
97.	PWR Reactor Cavity Uncontrolled Exposures	H. Vandermolen	NRR/DSI/RAB	III.D.3.1		06/30/85	NA
98.	CRD Accumulator Check Valve Leakage	J. Pittman	NRR/DSI/ASB	DROP		06/30/85	NA
99.	RCS/RHR Suction Line Valve Interlock on PWRs	J. Pittman	RES/DRPS/RPSI	NOTE 3(a)	3	06/30/91	L-817
100.	Once-Through Steam Generator Level	J. Jackson	RES/DSIR/EIB	DROP	1	06/30/95	NA

Table II (Continued)

Action Plan Item/ Issue No.	Title	Priority Analyst	Lead Office/ Division/ Branch	Safety Priority Ranking	Latest Rev.	Latest Issuance Date	MPA No.
101.	BWR Water Level Redundancy	H. Vandermolen	RES/DE/EIB	NOTE 3(b)	1	06/30/89	NA
102.	Human Error in Events Involving Wrong Unit or Wrong Train	R. Emrit	NRR/DLPQ/LPEB	NOTE 3(b)	2	12/31/88	NA
103.	Design for Probable Maximum Precipitation	R. Emrit	RES/DE/EIB	NOTE 3(a)	1	12/31/89	NA
104.	Reduction of Boron Dilution Requirements	J. Pittman	RES/DRA/ARGIB	DROP		12/31/88	NA
105.	Interfacing Systems LOCA at LWRs	W. Milstead	RES/DE/EIB	NOTE 3(b)	4	06/30/95	NA
106.	Piping and Use of Highly Combustible Gases in Vital Areas	W. Milstead	RES/DRPS	NOTE 3(b)	2	06/30/95	NA
107.	Main Transformer Failures	W. Milstead	RES/DRA/ARGIB	DROP	3	06/30/00	NA
108.	BWR Suppression Pool Temperature Limits	L. Riani	NRR/DSI/CSB	RI (NOTE 3)		06/30/85	NA
109.	Reactor Vessel Closure Failure	R. Riggs	RES/DRA/ARGIB	DROP		06/30/90	NA
110.	Equipment Protective Devices on Engineered Safety Features	Diab	RES/DSIR/EIB	DROP	1	06/30/95	NA
111.	Stress Corrosion Cracking of Pressure Boundary Ferritic Steels in Selected Environments	R. Riggs	NRR/DE/MTEB	LI (NOTE 5)	1	06/30/91	NA
112.	Westinghouse RPS Surveillance Frequencies and Out-of-Service Times	J. Pittman	NRR/DSI/ICSB	RI (NOTE 3)		12/31/85	NA
113.	Dynamic Qualification Testing of Large Bore Hydraulic Snubbers	R. Riggs	RES/DSIR/EIB	NOTE 3(b)	2	06/30/95	NA
114.	Seismic-Induced Relay Chatter	R. Riggs	NRR/DSRO/SPEB	A-46	1	06/30/91	NA
115.	Enhancement of the Reliability of Westinghouse Solid State Protection System	W. Milstead	RES/DRPS/RPSI	NOTE 3(b)	2	06/30/00	NA
116.	Accident Management	J. Pittman	RES/DRA/ARGIB	S		06/30/91	NA
117.	Allowable Time for Diverse Simultaneous Equipment Outages	J. Pittman	RES/DRA/ARGIB	DROP		06/30/90	NA
118.	Tendon Anchorage Failure	Shaukat	RES/DSIR/EIB	NOTE 3(a)	1	06/30/95	NA
119.	Piping Review Committee Recommendations	-	-	-			
119.1	Piping Rupture Requirements and Decoupling of Seismic and LOCA Loads	R. Riggs	NRR/DE	RI (NOTE 3)	3	12/31/97	NA
119.2	Piping Damping Values	R. Riggs	NRR/DE	RI (DROP)	3	12/31/97	NA
119.3	Decoupling the OBE from the SSE	R. Riggs	NRR/DE	RI (S)	3	12/31/97	NA
119.4	BWR Piping Materials	R. Riggs	NRR/DE	RI (NOTE 5)	3	12/31/97	NA
119.5	Leak Detection Requirements	R. Riggs	NRR/DE	RI (NOTE 5)	3	12/31/97	NA
120.	On-Line Testability of Protection Systems	W. Milstead	RES/DRA/ARGIB	NOTE 3(b)	2	06/30/95	NA
121.	Hydrogen Control for Large, Dry PWR Containments	R. Emrit	RES/DSIR/SAIB	NOTE 3(b)	2	06/30/95	NA
122.	Davis-Besse Loss of All Feedwater Event of June 9, 1985: Short-Term Actions						
122.1	Potential Inability to Remove Reactor Decay Heat	-	-	-			
122.1.a	Failure of Isolation Valves in Closed Position	H. Vandermolen	NRR/DSRO/RSIB	124	4	12/31/98	NA
122.1.b	Recovery of Auxiliary Feedwater	H. Vandermolen	NRR/DSRO/RSIB	124	4	12/31/98	NA
122.1.c.	Interruption of Auxiliary Feedwater Flow	H. Vandermolen	NRR/DSRO/RSIB	124	4	12/31/98	NA

Table II (Continued)

Action Plan Item/ Issue No.	Title	Priority Analyst	Lead Office/ Division/ Branch	Safety Priority Ranking	Latest Rev.	Latest Issuance Date	MPA No.
122.2	Initiating Feed-and-Bleed	H. Vandermolen	NRR/DEST/SRXB	NOTE 3(b)	4	12/31/98	NA
122.3	Physical Security System Constraints	H. Vandermolen	NRR/DSRO/SPEB	DROP	4	12/31/98	NA
123.	Deficiencies in the Regulations Governing DBA and Single-Failure Criteria Suggested by the Davis-Besse Event of June 9, 1985	W. Milstead	RES/DSIR/SAIB	DROP	1	06/30/95	NA
124.	Auxiliary Feedwater System Reliability	R. Emrit	NRR/DEST/SRXB	NOTE 3(a)	3	06/30/91	
125.	Davis-Besse Loss of All Feedwater Event of June 9, 1985: Long-Term Actions	-	-	-			
125.I.1	Availability of the Shift Technical Advisor	H. Vandermolen	RES/DRA/ARGIB	DROP	7	12/31/98	NA
125.I.2	PORV Reliability	-	-	-	7	12/31/98	
125.I.2.a	Need for a Test Program to Establish Reliability of the PORV	H. Vandermolen	NRR/DSRO/SPEB	70	7	12/31/98	NA
125.I.2.b	Need for PORV Surveillance Tests to Confirm Operational Readiness	H. Vandermolen	NRR/DSRO/SPEB	70	7	12/31/98	NA
125.I.2.c	Need for Additional Protection Against PORV Failure	H. Vandermolen	NRR/DSRO/SPEB	DROP	7	12/31/98	NA
125.I.2.d	Capability of the PORV to Support Feed-and-Bleed	H. Vandermolen	NRR/DSRO/SPEB	A-45	7	12/31/98	NA
125.I.3	SPDS Availability	W. Milstead	RES/DRA/ARGIB	NOTE 3(b)	7	12/31/98	NA
125.I.4	Plant-Specific Simulator	R. Riggs	RES/DRA/ARGIB	DROP	7	12/31/98	NA
125.I.5	Safety Systems Tested in All Conditions Required by DBA	R. Riggs	RES/DRA/ARGIB	DROP	7	12/31/98	NA
125.I.6	Valve Torque Limit and Bypass Switch Settings	H. Vandermolen	RES/DRA/ARGIB	DROP	7	12/31/98	NA
125.I.7	Operator Training Adequacy	-	-	-			
125.I.7.a	Recover Failed Equipment	J. Pittman	RES/DRA/ARGIB	DROP	7	12/31/98	NA
125.I.7.b	Realistic Hands-On Training	H. Vandermolen	RES/DRA/ARGIB	DROP	7	12/31/98	NA
125.I.8	Procedures and Staffing for Reporting to NRC Emergency Response Center	H. Vandermolen	RES/DRA/ARGIB	DROP	7	12/31/98	NA
125.II.1	Need for Additional Actions on AFW Systems	-	-	-			
125.II.1.a	Two-Train AFW Unavailability	H. Vandermolen	NRR/DSRO/SPEB	DROP	7	12/31/98	NA
125.II.1.b	Review Existing AFW Systems for Single Failure	H. Vandermolen	NRR/DSRO/SPEB	124	7	12/31/98	NA
125.II.1.c	NUREG-0737 Reliability Improvements	H. Vandermolen	NRR/DSRO/SPEB	DROP	7	12/31/98	NA
125.II.1.d	AFW/Steam and Feedwater Rupture Control System/ICS Interactions in B&W Plants	H. Vandermolen	NRR/DSRO/SPEB	DROP	7	12/31/98	NA
125.II.2	Adequacy of Existing Maintenance Requirements for Safety-Related Systems	R. Riggs	RES/DRA/ARGIB	DROP	7	12/31/98	NA
125.II.3	Review Steam/Feedline Break Mitigation Systems for Single Failure	V'Molen	NRR/DSRO/SPEB	DROP	7	12/31/98	NA
125.II.4	Thermal Stress of OTSG Components	R. Riggs	NRR/DSRO/SPEB	DROP	7	12/31/98	NA
125.II.5	Thermal-Hydraulic Effects of Loss and Restoration of Feedwater on Primary System Components	R. Riggs	RES/DRA/ARGIB	DROP	7	12/31/98	
125.II.6	Reexamine PRA Estimates of Core Damage Risk from Loss	H. Vandermolen	RES/DRA/ARGIB	DROP	7	12/31/98	NA

Table II (Continued)

Action Plan Item/ Issue No.	Title	Priority Analyst	Lead Office/ Division/ Branch	Safety Priority Ranking	Latest Rev.	Latest Issuance Date	MPA No.
	of All Feedwater						
125.II.7	Reevaluate Provision to Automatically Isolate Feedwater from Steam Generator During a Line Break	H. Vandermolen	RES/DRPS/RPSI	NOTE 3(b)	7	12/31/98	NA
125.II.8	Reassess Criteria for Feed-and-Bleed Initiation	H. Vandermolen	RES/DRA/ARGIB	DROP	7	12/31/98	NA
125.II.9	Enhanced Feed-and-Bleed Capability	H. Vandermolen	NRR/DSRO/SPEB	DROP	7	12/31/98	NA
125.II.10	Hierarchy of Impromptu Operator Actions	R. Riggs	RES/DRA/ARGIB	DROP	7	12/31/98	NA
125.II.11	Recovery of Main Feedwater as Alternative to Auxiliary Feedwater	R. Riggs	RES/DRA/ARGIB	DROP	7	12/31/98	NA
125.II.12	Adequacy of Training Regarding PORV Operation	R. Riggs	RES/DRA/ARGIB	DROP	7	12/31/98	NA
125.II.13	Operator Job Aids	J. Pittman	NRR/DRA/ARGIB	DROP	7	12/31/98	NA
125.II.14	Remote Operation of Equipment Which Must Now Be Operated Locally	H. Vandermolen	NRR/DSRO/SPEB	DROP	7	12/31/98	NA
126.	Reliability of PWR Main Steam Safety Valves	R. Riggs	RES/DRA/ARGIB	LI (NOTE 3)		06/30/88	NA
127.	Maintenance and Testing of Manual Valves in Safety-Related Systems	J. Pittman	RES/DRA/ARGIB	LOW		12/31/87	NA
128.	Electrical Power Reliability	R. Emrit	RES/DSIR/EIB	NOTE 3(a)	2	06/30/95	
129.	Valve Interlocks to Prevent Vessel Drainage During Shutdown Cooling	W. Milstead	RES/DRA/ARGIB	DROP		06/30/90	NA
130.	Essential Service Water Pump Failures at Multiplant Sites	R. Riggs	RES/DSIR/RPSIB	NOTE 3(a)	2	12/31/95	
131.	Potential Seismic Interaction Involving the Movable In-Core Flux Mapping System Used in Westinghouse-Designed Plants	R. Riggs	RES/DRA/ARGIB	S	1	06/30/91	NA
132.	RHR System Inside Containment	Su	RES/DSIR/SAIB	DROP	1	12/31/95	NA
133.	Update Policy Statement on Nuclear Plant Staff Working Hours	J. Pittman	NRR/DLPQ/LHFB	LI (NOTE 3)	1	12/31/91	NA
134.	Rule on Degree and Experience Requirement	J. Pittman	RES/DRA/RDB	NOTE 3(b)		12/31/89	NA
135.	Steam Generator and Steam Line Overfill	R. Emrit	RES/DSIR/EIB	NOTE 3(b)	3	06/30/95	NA
136.	Storage and Use of Large Quantities of Cryogenic Combustibles On Site	W. Milstead	RES/DRA/ARGIB	LI (NOTE 3)		06/30/88	NA
137.	Refueling Cavity Seal Failure	W. Milstead	RES/DRA/ARGIB	DROP		06/30/90	NA
138.	Deinerting of BWR Mark I and II Containments During Power Operations Upon Discovery of RCS Leakage or a Train of a Safety System Inoperable	W. Milstead	RES/DSIR/SAIB	DROP	2	12/31/98	NA
139.	Thinning of Carbon Steel Piping in LWRs	R. Riggs	RES/DRA/ARGIB	RI (NOTE 3)	1	06/30/95	NA
140.	Fission Product Removal Systems	R. Riggs	RES/DRA/ARGIB	DROP		06/30/90	NA
141.	Large-Break LOCA With Consequential SGTR	R. Riggs	RES/DRA/ARGIB	DROP		06/30/90	NA
142.	Leakage Through Electrical Isolators in Instrumentation Circuits	W. Milstead	RES/DSIR/EIB	NOTE 3(b)	4	12/31/97	NA
143.	Availability of Chilled Water Systems and Room Cooling	W. Milstead	RES/DRA/ARGIB	NOTE 3(b)	2	06/30/95	NA
144.	Scram Without a Turbine/Generator Trip	Hrabal	RES/DSIR/EIB	DROP	2	12/31/98	NA

Table II (Continued)

Action Plan Item/ Issue No.	Title	Priority Analyst	Lead Office/ Division/ Branch	Safety Priority Ranking	Latest Rev.	Latest Issuance Date	MPA No.
145.	Actions to Reduce Common Cause Failures	Rasmuson	RES/DST/PRAB	NOTE 3(b)	3	06/30/00	NA
146.	Support Flexibility of Equipment and Components	Chang	RES/DSIR/EIB	NOTE 3(b)	2	06/30/95	NA
147.	Fire-Induced Alternate Shutdown/Control Room Panel Interactions	W. Milstead	RES/DSIR/SAIB	LI (NOTE 3)	1	06/30/94	NA
148.	Smoke Control and Manual Fire-Fighting Effectiveness	Basdekas	RES/DSIR/RPSIB	LI (NOTE 3)	1	06/30/00	NA
149.	Adequacy of Fire Barriers	R. Emrit	RES/DSIR/EIB	DROP	2	12/31/98	NA
150.	Overpressurization of Containment Penetrations	W. Milstead	RES/DSIR/SAIB	DROP	1	06/30/95	NA
151.	Reliability of Anticipated Transient Without SCRAM Recirculation Pump Trip in BWRs	W. Milstead	RES/DSIR/SAIB	NOTE 3(b)	2	06/30/95	NA
152.	Design Basis for Valves That Might Be Subjected to Significant Blowdown Loads	R. Emrit	RES/DSIR/EIB	DROP	3	06/30/01	NA
153.	Loss of Essential Service Water in LWRs	R. Riggs	RES/DRA/ARGIB	NOTE 3(b)	2	12/31/95	NA
154.	Adequacy of Emergency and Essential Lighting	Woods	RES/DSIR/SAIB	DROP	2	12/31/98	NA
155.	Generic Concerns Arising from TMI-2 Cleanup	-	-	-			
155.1	More Realistic Source Term Assumptions	R. Emrit	RES/DST/AEB	NOTE 3(a)	2	06/30/95	NA
155.2	Establish Licensing Requirements for Non-Operating Facilities	R. Emrit	RES/DSIR/EIB	RI (NOTE 5)	2	06/30/95	NA
155.3	Improve Design Requirements for Nuclear Facilities	R. Emrit	RES/DSIR/EIB	DROP	2	06/30/95	NA
155.4	Improve Criticality Calculations	R. Emrit	RES/DSIR/EIB	DROP	2	06/30/95	NA
155.5	More Realistic Severe Reactor Accident Scenario	R. Emrit	RES/DSIR/EIB	DROP	2	06/30/95	NA
155.6	Improve Decontamination Regulations	R. Emrit	RES/DSIR/EIB	DROP	2	06/30/95	NA
155.7	Improve Decommissioning Regulations	R. Emrit	RES/DSIR/EIB	DROP	2	06/30/95	NA
156.	Systematic Evaluation Program	-	-	-			
156.1.1	Settlement of Foundations and Buried Equipment	T.Y. Chang	RES/DSIR/EIB	DROP	7	06/30/01	NA
156.1.2	Dam Integrity and Site Flooding	J. Chen	RES/DSIR/SAIB	DROP	7	06/30/01	NA
156.1.3	Site Hydrology and Ability to Withstand Floods	J. Chen	RES/DSIR/SAIB	DROP	7	06/30/01	NA
156.1.4	Industrial Hazards	C. Ferrell	RES/DSIR/SAIB	DROP	7	06/30/01	NA
156.1.5	Tornado Missiles	J. Chen	RES/DSIR/SAIB	DROP	7	06/30/01	NA
156.1.6	Turbine Missiles	R. Emrit	RES/DSIR/EIB	DROP	7	06/30/01	NA
156.2.1	Severe Weather Effects on Structures	J. Chen	RES/DSIR/SAIB	DROP	7	06/30/01	NA
156.2.2	Design Codes, Criteria, and Load Combinations	R. Kirkwood	RES/DSIR/EIB	DROP	7	06/30/01	NA
156.2.3	Containment Design and Inspection	S. Shaukat	RES/DSIR/EIB	DROP	7	06/30/01	NA
156.2.4	Seismic Design of Structures, Systems, and Components	J. Chen	RES/DSIR/SAIB	DROP	7	06/30/01	NA
156.3.1.1	Shutdown Systems	R. Woods	RES/DSIR/SAIB	DROP	7	06/30/01	NA
156.3.1.2	Electrical Instrumentation and Controls	R. Woods	RES/DSIR/SAIB	DROP	7	06/30/01	NA
156.3.2	Service and Cooling Water Systems	N. Su	RES/DSIR/SAIB	DROP	7	06/30/01	NA
156.3.3	Ventilation Systems	G. Burdick	RES/DSIR/SAIB	DROP	7	06/30/01	NA
156.3.4	Isolation of High and Low Pressure Systems	G. Burdick	RES/DSIR/SAIB	DROP	7	06/30/01	NA
156.3.5	Automatic ECCS Switchover	W. Milstead	RES/DSIR/SAIB	24	7	06/30/01	NA
156.3.6.1	Emergency AC Power	R. Emrit	RES/DSIR/EIB	DROP	7	06/30/01	NA
156.3.6.2	Emergency DC Power	C. Rourk	RES/DSIR/EIB	DROP	7	06/30/01	NA

Table II (Continued)

Action Plan Item/ Issue No.	Title	Priority Analyst	Lead Office/ Division/ Branch	Safety Priority Ranking	Latest Rev.	Latest Issuance Date	MPA No.
156.3.8	Shared Systems	R. Emrit	RES/DSIR/EIB	DROP	7	06/30/01	NA
156.4.1	RPS and ESFS Isolation	R. Emrit	RES/DSIR/EIB	142	7	06/30/01	NA
156.4.2	Testing of the RPS and ESFS	T.Y. Chang	RES/DSIR/SAIB	120	7	06/30/01	NA
156.6.1	Pipe Break Effects on Systems and Components	J. Page	RES/DET/GSIB	HIGH	7	06/30/01	
157.	Containment Performance	J. Shaperow	RES/DSIR/SAIB	NOTE 3(b)		06/30/95	NA
158.	Performance of Power-Operated Valves Under Design Basis Conditions	C. Hrabal	RES/DET/GSIB	NOTE 3(b)	2	06/30/00	NA
159.	Qualification of Safety-Related Pumps While Running on Minimum Flow	N. Su	RES/DSIR/SAIB	DROP	1	06/30/95	NA
160.	Spurious Actions of Instrumentation Upon Restoration of Power	C. Rourk	RES/DSIR/EIB	DROP	1	06/30/95	NA
161.	Use of Non-Safety-Related Power Supplies in Safety-Related Circuits	C. Rourk	RES/DSIR/EIB	DROP	1	06/30/95	NA
162.	Inadequate Technical Specifications for Shared Systems at Multiplant Sites When One Unit Is Shut Down	U. Cheh	RES/DSIR/SAIB	DROP	1	06/30/95	NA
163.	Multiple Steam Generator Tube Leakage	Coffman	RES/DET/GSIB	HIGH		12/31/97	
164.	Neutron Fluence in Reactor Vessel	R. Emrit	RES/DSIR/EIB	DROP	1	06/30/95	NA
165.	Safety and Safety/Relief Valve Reliability	C. Hrabal	RES/DET/GSIB	NOTE 3(b)	2	06/30/00	NA
166.	Adequacy of Fatigue Life of Metal Components	R. Emrit	NRR/DE/EMEB	NOTE 3(b)	2	12/31/97	NA
167.	Hydrogen Storage Facility Separation	G. Burdick	RES/DSIR/SAIB	LOW	1	06/30/95	NA
168.	Environmental Qualification of Electrical Equipment	R. Emrit	NRR/DSSA/SPLB	HIGH	2	12/31/98	
169.	BWR MSIV Common Mode Failure Due to Loss of Accumulator Pressure	R. Emrit	RES/DET/GSIB	DROP	1	06/30/00	NA
170.	Fuel Damage Criteria for High Burnup Fuel	R. Emrit	RES/DET/GSIB	NOTE 3(b)	2	06/30/01	NA
171.	ESF Failure from LOOP Subsequent to a LOCA	C. Rourk	RES/DET/GSIB	NOTE 3(b)	1	12/31/98	NA
172.	Multiple System Responses Program	R. Emrit	RES/DET/GSIB	NOTE 3(b)	2	06/30/02	NA
173.	Spent Fuel Storage Pool	-	-				
173.A	Operating Facilities	R. Emrit	RES/DET/GSIB	NOTE 3(b)	4	06/30/02	NA
173.B	Permanently Shutdown Facilities	R. Emrit	RES/DET/GSIB	NOTE 3(b)	4	06/30/02	NA
174.	Fastener Gaging Practices	-	-				
174.A	SONGS Employees' Concern	R. Emrit	RES/DET/GSIB	NOTE 3(b)	1	06/30/00	NA
174.B	Johnson Gage Company Concern	R. Emrit	RES/DET/GSIB	NOTE 3(b)	1	06/30/00	NA
175.	Nuclear Power Plant Shift Staffing	R. Emrit	RES/DET/GSIB	NOTE 3(b)	1	06/30/00	NA
176.	Loss of Fill-Oil in Rosemount Transmitters	R. Emrit	RES/DET/GSIB	NOTE 3(b)	1	06/30/00	NA
177.	Vehicle Intrusion at TMI	R. Emrit	RES/DET/GSIB	NOTE 3(a)	1	06/30/00	NA
178.	Effect of Hurricane Andrew on Turkey Point	R. Emrit	RES/DET/GSIB	LI (NOTE 3)	2	06/30/00	
179.	Core Performance	R. Emrit	RES/DET/GSIB	LI (NOTE 5)	1	06/30/00	
180.	Notice of Enforcement Discretion	R. Emrit	RES/DET/GSIB	LI (NOTE 3)	1	06/30/00	
181.	Fire Protection	R. Emrit	RES/DET/GSIB	LI (NOTE 5)	1	06/30/00	
182.	General Electric Extended Power Uprate	R. Emrit	RES/DET/GSIB	RI (NOTE 5)	1	06/30/00	

Table II (Continued)

Action Plan Item/ Issue No.	Title	Priority, Analyst	Lead Office/ Division/ Branch	Safety Priority Ranking	Latest Rev.	Latest Issuance Date	MPA No.
183.	Cycle-Specific Parameter Limits in Technical Specifications	R. Emrit	RES/DET/GSIB	RI (NOTE 3)	2	06/30/00	
184.	Endangered Species	R. Emrit	RES/DET/GSIB	EI (NOTE 5)	1	06/30/00	
185.	Control of Recriticality Following Small-Break LOCA in PWRs	H. Vandermolen	RES/DSARE/REAHFB	HIGH		06/30/01	
186.	Potential Risk and Consequences of Heavy Load Drops	R. Lloyd	RES/DSARE/REAHFB	CONTINUE		06/30/04	
187.	The Potential Impact of Postulated Cesium Concentration on Equipment Qualification in the Containment Sump in Nuclear Power Plants	H. Vandermolen	RES/DSARE/REAHFB	DROP		06/30/01	NA
188.	Steam Generator Tube Leaks/Ruptures Concurrent with Containment Bypass	H. Vandermolen	RES/DSARE/REAHFB	Continue		06/30/02	
189.	Susceptibility of Ice Condenser Containments to Early Failure from Hydogen Combustion During A Severe Accident	H. Vandermolen	RES/DSARE/REAHFB	Continue		06/30/02	
190.	Fatigue Evaluation of Metal Components for 60-Year Plant Life	S. Shaukat	RES/DET/GSIB	NOTE 3(b)	2	06/30/00	NA
191.	Assessment of Debris Accumulation on PWR Sump Performance	M. Marshall	RES/DET/GSIB	HIGH	1	12/31/98	
192.	Secondary Containment Drawdown Time	H. Vandermolen	RES/DSARE/REAHFB	DROP		06/30/03	NA
193.	BWR ECCS Suction Concerns	H. Vandermolen	RES/DSARE/REAHFB	CONTINUE		06/30/04	
194.	Implications of Updated Probabilistic Seismic Hazard Estimates	D. Harrison	NRR/DSSA/SPSB	DROP		06/30/04	NA
195.	Hydrogen Combustion in Foreign BWR Piping	H. Vandermolen	RES/DSARE/REAHFB	DROP		06/30/04	NA
196.	Boral Degradation	H. Vandermolen	RES/DSARE/ARREB	NOTE 4		(Later)	
		HUMAN FACTORS ISSUES					
HF1	STAFFING AND QUALIFICATIONS						
HF1.1	Shift Staffing	J. Pittman	RES/DRPS/RHFB	NOTE 3(a)	2	06/30/89	
HF1.2	Engineering Expertise on Shift	J. Pittman	NRR/DHFT/HFIB	NOTE 3(b)	2	06/30/89	
HF1.3	Guidance on Limits and Conditions of Shift Work	J. Pittman	NRR/DHFT/HFIB	NOTE 3(b)	2	06/30/89	
HF2	TRAINING						
HF2.1	Evaluate Industry Training	J. Pittman	NRR/DHFT/HFIB	LI (NOTE 5)	1	12/31/86	NA
HF2.2	Evaluate INPO Accreditation	J. Pittman	NRR/DHFT/HFIB	LI (NOTE 5)	1	12/31/86	NA
HF2.3	Revise SRP Section 13.2	J. Pittman	NRR/DHFT/HFIB	LI (NOTE 5)	1	12/31/86	NA
HF3	OPERATOR LICENSING EXAMINATIONS						

Table II (Continued)

Action Plan Item/ Issue No.	Title	Priority Analyst	Lead Office/ Division/ Branch	Safety Priority Ranking	Latest Rev.	Latest Issuance Date	MPA No.
HF3.1	Develop Job Knowledge Catalog	J. Pittman	NRR/DHFT/HFIB	LI (NOTE 3)	2	12/31/87	NA
HF3.2	Develop License Examination Handbook	J. Pittman	NRR/DHFT/HFIB	LI (NOTE 3)	2	12/31/87	NA
HF3.3	Develop Criteria for Nuclear Power Plant Simulators	J. Pittman	NRR/DHFT/HFIB	I.A.4.2(4)	2	12/31/87	NA
HF3.4	Examination Requirements	J. Pittman	NRR/DHFT/HFIB	I.A.2.6(1)	2	12/31/87	NA
HF3.5	Develop Computerized Exam System	J. Pittman	NRR/DHFT/HFIB	LI (NOTE 3)	2	12/31/87	NA
HF4	PROCEDURES						
HF4.1	Inspection Procedure for Upgraded Emergency Operating Procedures	J. Pittman	NRR/DLPQ/LHFB	NOTE 3(b)	6	06/30/95	NA
HF4.2	Procedures Generation Package Effectiveness Evaluation	J. Pittman	NRR/DHFT/HFIB	LI (NOTE 5)	6	06/30/95	NA
HF4.3	Criteria for Safety-Related Operator Actions	J. Pittman	NRR/DHFT/HFIB	B-17	6	06/30/95	NA
HF4.4	Guidelines for Upgrading Other Procedures	J. Pittman	RES/DRPS/RHFB	NOTE 3(b)	6	06/30/95	NA
HF4.5	Application of Automation and Artificial Intelligence	J. Pittman	NRR/DHFT/HFIB	HF5.2	6	06/30/95	NA
HF5	MAN-MACHINE INTERFACE						
HF5.1	Local Control Stations	J. Pittman	RES/DRPS/RHFB	NOTE 3(b)	4	06/30/95	NA
HF5.2	Review Criteria for Human Factors Aspects of Advanced Controls and Instrumentation	J. Pittman	RES/DRPS/RHFB	NOTE 3(b)	4	06/30/95	NA
HF5.3	Evaluation of Operational Aid Systems	J. Pittman	NRR/DHFT/HFIB	HF5.2	4	06/30/95	NA
HF5.4	Computers and Computer Displays	J. Pittman	NRR/DHFT/HFIB	HF5.2	4	06/30/95	NA
HF6	MANAGEMENT AND ORGANIZATION						
HF6.1	Develop Regulatory Position on Management and Organization	J. Pittman	NRR/DHFT/HFIB	I.B.1.1 (1,2,3,4)	1	12/31/86	NA
HF6.2	Regulatory Position on Management and Organization at Operating Reactors	J. Pittman	NRR/DHFT/HFIB	I.B.1.1 (1,2,3,4)	1	12/31/86	NA
HF7	HUMAN RELIABILITY						
HF7.1	Human Error Data Acquisition	J. Pittman	NRR/DHFT/HFIB	LI (NOTE 5)	1	12/31/86	NA
HF7.2	Human Error Data Storage and Retrieval	J. Pittman	NRR/DHFT/HFIB	LI (NOTE 5)	1	12/31/86	NA
HF7.3	Reliability Evaluation Specialist Aids	J. Pittman	NRR/DHFT/HFIB	LI (NOTE 5)	1	12/31/86	NA
HF7.4	Safety Event Analysis Results Applications	J. Pittman	NRR/DHFT/HFIB	LI (NOTE 5)	1	12/31/86	NA
HF8	Maintenance and Surveillance Program	J. Pittman	NRR/DLPQ/LPEB	NOTE 3(b)	2	06/30/88	NA

Table II (Continued)

Action Plan Item/ Issue No.	Title	Priority Analyst	Lead Office/ Division/ Branch	Safety Priority Ranking	Latest Rev.	Latest Issuance Date	MPA No.
	CHERNOBYL ISSUES						
CH1	**ADMINISTRATIVE CONTROLS AND OPERATIONAL PRACTICES**						
CH1.1	Administrative Controls to Ensure That Procedures Are Followed and That Procedures Are Adequate	-	-				
CH1.1A	Symptom-Based EOPs	R. Emrit	NRR/DLPQ/LHFB	LI (NOTE 5)		06/30/89	NA
CH1.1B	Procedure Violations	R. Emrit	RES/DSR/HFRB	LI (NOTE 5)		06/30/89	NA
CH1.2	Approval of Tests and Other Unusual Operations	-	-				
CH1.2A	Test, Change, and Experiment Review Guidelines	R. Emrit	NRR/DOEA/OTSB	LI (NOTE 5)		06/30/89	NA
CH1.2B	NRC Testing Requirements	R. Emrit	RES/DSR/HFRB	LI (NOTE 5)		06/30/89	NA
CH1.3	Bypassing Safety Systems	-	-				
CH1.3A	Revise Regulatory Guide 1.47	R. Emrit	RES/DE/EMEB	LI (NOTE 5)		06/30/89	NA
CH1.4	Availability of Engineered Safety Features	-	-				
CH1.4A	Engineered Safety Feature Availability	R. Emrit	NRR/DOEA/OTSB	LI (NOTE 5)		06/30/89	NA
CH1.4B	Technical Specifications Bases	R. Emrit	NRR/DOEA/OTSB	LI (NOTE 5)		06/30/89	NA
CH1.4C	Low Power and Shutdown	R. Emrit	RES/DSR/PRAB	LI (NOTE 5)		06/30/89	NA
CH1.5	Operating Staff Attitudes Toward Safety	R. Emrit	RES/DRA/ARGIB	LI (NOTE 3)		06/30/89	NA
CH1.6	Management Systems	-	-				
CH1.6A	Assessment of NRC Requirements on Management	R. Emrit	RES/DSR/HFRB	LI (NOTE 5)		06/30/89	NA
CH1.7	Accident Management	-	-				
CH1.7A	Accident Management	R. Emrit	RES/DSR/HFRB	LI (NOTE 5)		06/30/89	NA
CH2	**DESIGN**						
CH2.1	Reactivity Accidents	-	-				
CH2.1A	Reactivity Transients	R. Emrit	RES/DSR/RPSB	LI (NOTE 5)		06/30/89	NA
CH2.2	Accidents at Low Power and at Zero Power	R. Emrit	RES/DRA/ARGIB	CH1.4		06/30/89	NA
CH2.3	Multiple-Unit Protection	-	-				
CH2.3A	Control Room Habitability	R. Emrit	RES/DRA/ARGIB	83		06/30/89	NA
CH2.3B	Contamination Outside Control Room	R. Emrit	RES/DRA/ARGIB	LI (NOTE 5)		06/30/89	NA
CH2.3C	Smoke Control	R. Emrit	RES/DSIR/SAIB	LI (NOTE 5)		06/30/89	NA
CH2.3D	Shared Shutdown Systems	R. Emrit	RES/DRA/ARGIB	LI (NOTE 5)		06/30/89	NA
CH2.4	Fire Protection	-	-				
CH2.4A	Firefighting With Radiation Present	R. Emrit	RES/DSIR/SAIB	LI (NOTE 5)		06/30/89	NA
CH3	**CONTAINMENT**						
CH3.1	Containment Performance During Severe Accidents	-	-				
CH3.1A	Containment Performance	R. Emrit	RES/DSIR/SAIB	LI (NOTE 5)		06/30/89	NA
CH3.2	Filtered Venting	-	-				

Table II (Continued)

Action Plan Item/ Issue No.	Title	Priority Analyst	Lead Office/ Division/ Branch	Safety Priority Ranking	Latest Rev.	Latest Issuance Date	MPA No.
CH3.2A	Filtered Venting	R. Emrit	RES/DSIR/SAIB	LI (NOTE 5)		06/30/89	NA
CH4	EMERGENCY PLANNING						
CH4.1	Size of the Emergency Planning Zones	R. Emrit	RES/DRA/ARGIB	LI (NOTE 3)		06/30/89	NA
CH4.2	Medical Services	R. Emrit	RES/DRA/ARGIB	LI (NOTE 3)		06/30/89	NA
CH4.3	Ingestion Pathway Measures	-	-				
CH4.3A	Ingestion Pathway Protective Measures	R. Emrit	RES/DSIR/SAIB	LI (NOTE 5)		06/30/89	NA
CH4.4	Decontamination and Relocation	-	-				
CH4.4A	Decontamination	R. Emrit	RES/DSIR/SAIB	LI (NOTE 5)		06/30/89	NA
CH4.4B	Relocation	R. Emrit	RES/DSIR/SAIB	LI (NOTE 5)		06/30/89	NA
CH5	SEVERE ACCIDENT PHENOMENA						
CH5.1	Source Term	-	-				
CH5.1A	Mechanical Dispersal in Fission Product Release	R. Emrit	RES/DSR/AEB	LI (NOTE 5)		06/30/89	NA
CH5.1B	Stripping in Fission Product Release	R. Emrit	RES/DSR/AEB	LI (NOTE 5)		06/30/89	NA
CH5.2	Steam Explosions	-	-				
CH5.2A	Steam Explosions	R. Emrit	RES/DSR/AEB	LI (NOTE 5)		06/30/89	NA
CH5.3	Combustible Gas	R. Emrit	RES/DRA/ARGIB	LI (NOTE 3)		06/30/89	NA
CH6	GRAPHITE-MODERATED REACTORS						
CH6.1	Graphite-Moderated Reactors	-	-				
CH6.1A	The Fort St. Vrain Reactor and the Modular HTGR	R. Emrit	RES/DRA/ARGIB	LI (NOTE 3)		06/30/89	NA
CH6.1B	Structural Graphite Experiments	R. Emrit	RES/DRA/ARGIB	LI (NOTE 3)		06/30/89	NA
CH6.2	Assessment	R. Emrit	RES/DRA/ARGIB	LI (NOTE 3)		06/30/89	NA

TABLE III

SUMMARY OF THE PRIORITIZATION OF ALL TMI ACTION PLAN ITEMS, TASK ACTION PLAN ITEMS, NEW GENERIC ISSUES, HUMAN FACTORS ISSUES, AND CHERNOBYL ISSUES

Legend

NOTES:	1 - Possible Resolution Identified for Evaluation
	2 - Resolution Available
	3 - Resolution Resulted in either the Establishment of New Requirements or No New Requirements
	4 - Issues to be Prioritized in the Future
	5 - Issues that are not GSIs but Should be Assigned Resources for Completion
DROP	- GSI Dropped from Further Pursuit
EI	- Environmental Issue
GSI	- Generic Safety Issue
HIGH	- High Safety Priority
I	- TMI Action Plan Item with Implementation of Resolution Mandated by NUREG-0737
LI	- Licensing Issue
LOW	- Low Safety Priority
MEDIUM	- Medium Safety Priority
RI	- Regulatory Impact Issue
USI	- Unresolved Safety Issue
Continue	- As defined in NRC Management Directive 6.4

TABLE III

TABLE III (Continued)

ACTION ITEM/ISSUE GROUP	I	S	RESOLVED STAGES			USI	HIGH	MEDIUM	LOW	DROP	CONT.	NOTE 4	NOTE 5	TOTAL
			NOTE 1	NOTE 2	NOTE 3									
TMI ACTION PLAN ITEM (369)														
GSI	84	46	0	0	135	0	0	0	12	9	-	-	-	286
LI	-	0	-	-	75	-	-	-	-	-	-	-	8	83
TASK ACTION PLAN ITEMS (142)														
USI	-	-	-	-	27	0	-	-	-	-	-	-	-	27
GSI	-	20	0	0	36	-	0	0	0	14	-	-	-	70
RI	-	-	-	-	6	-	-	-	-	-	-	-	1	7
LI	-	-	-	-	11	-	-	-	-	-	-	-	12	23
EI	-	-	-	-	13	-	-	-	-	-	-	-	2	15
NEW GENERIC ISSUES (276)														
GSI	-	54	0	0	83	0	5	0	4	99	4	1	-	250
RI	-	1	-	-	5	-	-	-	-	1	-	-	5	12
LI	-	1	-	-	8	-	-	-	-	-	-	-	4	13
EI	-	-	-	-	-	-	-	-	-	-	-	-	1	1
HUMAN FACTORS ISSUES (27)														
GSI	-	8	0	0	8	0	0	0	0	0	-	-	-	16
LI	-	-	-	-	3	-	-	-	-	-	-	-	8	11
CHERNOBYL ISSUES (32)														
LI	-	2	-	-	7	-	-	-	-	-	-	-	23	32
TOTAL:	84	132	0	0	417	0	5	0	16	123	4	1	64	846

ITEM A-36: CONTROL OF HEAVY LOADS NEAR SPENT FUEL

DESCRIPTION

At all nuclear plants, overhead cranes are used to lift heavy objects in the vicinity of spent fuel. If a heavy object such as a spent fuel shipping cask or shielding block were to fall onto spent fuel in the storage pool or reactor core during refueling and damage the fuel, there could be a release of radioactivity to the environment. Such an occurrence also has the potential for overexposing plant personnel to radiation. If the dropped object were large and the damaged fuel contained a considerable amount of undecayed fission products, radiation releases to the environment could exceed 10 CFR Part 100 guidelines. With the advent of increased and longer-term storage of spent fuel, the NRC determined that there was a need for a systematic review of requirements, facility designs, and TS regarding the movement of heavy loads to assess safety margins and improve them where necessary. This item was originally identified in NUREG-0371[2] and was later determined to be a USI in NUREG-0510.[186]

CONCLUSION

This USI was RESOLVED in December 1980 with the issuance of GL 80-113,[1842] following publication of the report on the NRC review of nuclear power plant load-handling operations in NUREG-0612.[747] GL 80-113[1842] requested licensees to review their controls for the handling of heavy loads to determine the extent to which guidelines in NUREG-0612[747] were being satisfied, and to identify the changes and modifications that would be required in order to fully satisfy the guidelines. GL 81-07[1843] was subsequently issued to correct errors in GL 80-113.[1842]

Licensee responses to NUREG-0612[747] were requested in two parts: Phase I (6-month response); and Phase II (9-month response). For operating plants, MPAs C-10 and C-15 were established by NRR/DL to track the implementation of Phases I and II, respectively.[60] For future plants, SRP[11] Section 9.1.5. was revised. At the completion of Phase II, the results of the NRC findings were published in GL 85-11.[1844] However, in April 1999, Issue 186 was identified to address the NRR concern that licensees operating within the GL 85-11[1844] regulatory guidelines were not taking adequate measures to assess and mitigate the consequences of dropped heavy loads.

REFERENCES

2. NUREG-0371, "Task Action Plans for Generic Activities (Category A)," U.S. Nuclear Regulatory Commission, November 1978.

11. NUREG-0800, "Standard Review Plan for the Review of Safety Analysis Reports for Nuclear Power Plants," U.S. Nuclear Regulatory Commission, (1st Edition) November 1975, (2nd Edition) March 1980, (3rd Edition) July 1981.

60. NUREG-0606, "Unresolved Safety Issues Summary," U.S. Nuclear Regulatory Commission, Vol. 7 No. 3, August 1985.

186. NUREG-0510, "Identification of Unresolved Safety Issues Relating to Nuclear Power Plants," U.S. Nuclear Regulatory Commission, January 1979.

747. NUREG-0612, "Control of Heavy Loads at Nuclear Power Plants Resolution of Generic Technical Activity A-36," U.S. Nuclear Regulatory Commission, July 1980.

1842. NRC Letter to All Licensees of Operating Plants and Applicants for Operating Licenses and Holders of Construction Permits, "Control of Heavy Loads," (Generic Letter 80-113) December 22, 1980.

1843. NRC Letter to All Licensees of Operating Plants and Applicants for Operating Licenses and Holders of Construction Permits, "Control of Heavy Loads (Generic Letter 81-07)," February 3, 1981.

1844. NRC Letter to All Licensees for Operating Reactors, "Completion of Phase II of 'Control of Heavy Loads at Nuclear Power Plants,' NUREG-0612 (Generic Letter 85-11)" June 28, 1985.

ISSUE 82: BEYOND DESIGN BASIS ACCIDENTS IN SPENT FUEL POOLS

DESCRIPTION

Historical Background

The risks of beyond design basis accidents in the spent fuel storage pool were examined in WASH-1400[16] (App. I, pp. I-96ff). It was concluded that these risks were orders of magnitude below those involving the reactor core. The basic reason for this was the simplicity of the spent fuel storage pool -- the coolant is at atmospheric pressure, the spent fuel is always subcritical and the heat source is low, there is no piping which can drain the pool, and there are no anticipated operational transients that could interrupt cooling or cause criticality.

The reasons for reexamination of spent fuel storage pool accidents were two-fold. First, spent fuel is being stored instead of reprocessed. This has led to the expansion of onsite fuel storage by means of high density storage racks, which results in a larger inventory of fission products in the pool, a greater heat load on the pool cooling system, and less distance between adjacent fuel assemblies. Second, some laboratory studies have provided evidence of the possibility of fire propagation between assemblies in an air-cooled environment.[543,544] These two reasons, put together, provided the basis for an accident scenario which was not previously considered.

Safety Significance

A typical spent fuel storage pool with high density storage racks can hold roughly five times the fuel in the core. However, since reloads typically discharge one third of a core, much of the spent fuel stored in the pool will have had considerable decay time. This reduces the radioactive inventory somewhat. More importantly, after roughly three years of storage, spent fuel can be air-cooled, i.e., such fuel need not be submerged to prevent melting. (Submersion is still desirable for shielding and to reduce airborne activity, however.)

If the pool were to be drained of water, the discharged fuel from the previous two refuelings would still be "fresh" enough to melt under decay heat. However, the zircaloy cladding of this fuel could be ignited during the heatup.[543] The resulting fire, in a pool equipped with high density storage racks, would probably spread to most or all of the fuel in the pool. The heat of combustion, in combination with decay heat, would certainly release considerable gap activity from the fuel and would probably drive "borderline aged" fuel into a molten condition. Moreover, if the fire becomes oxygen-starved (quite probable for a fire located in the bottom of a pit such as this), the hot zirconium would rob oxygen from the uranium dioxide fuel, forming a liquid mixture of metallic uranium, zirconium, oxidized zirconium, and dissolved uranium dioxide. This would cause a release of fission products from the fuel matrix quite comparable to that of molten fuel.[545] In addition, although confined, spent fuel pools are almost always located outside of the primary containment. Thus, release to the atmosphere is more likely than for comparable accidents involving the reactor core.

Possible Solutions

At the time of the evaluation of this issue in December 1983, no generic solution to the potential problem had yet been identified. Several possibilities existed, however. The first possibility was to reprocess the spent fuel and thus reduce the inventory in the pool. Second, the pool could be compartmentalized by installing partitions (and individual coolant supply diffusers for each compartment) thus limiting the extent of an accident. Third, spray headers could be installed to provide cooling even when the pool is drained and not refloodable.

PRIORITY DETERMINATION

LWR spent fuel storage pools do not differ greatly. None are equipped with drains; a portable pump must be brought in when it is desired to empty the pool. The cooling systems are provided with anti-siphoning devices (check valves and/ or anti-siphoning holes) so that pipe breaks in the cooling system will not drain the pool. All are seismic Category I. One difference does exist: PWR pools are generally below grade (often on bedrock) while BWR pools are considerably above grade. Thus, even a hole in the bottom of the pool will not rapidly drain a PWR pool. This priority determination, therefore, is concentrated on a BWR pool because of its (somewhat) greater vulnerability.

Frequency Estimate

BWR spent fuel can be uncovered either by extended loss of pool cooling, which results in boiloff, or by an accident which drains the pool. Both mechanisms were considered.

Typically, a BWR spent fuel storage pool has no drains. Instead, coolant is withdrawn at the surface by skimmers which conduct the water into two surge tanks. The cooling system consists of two pumps and two heat exchangers which reject heat to the RBCCW system. These are not independent trains. The suction on the surge tanks is common and flow from the heat exchangers is combined to go through one filter/demineralizer before it is returned to the spent fuel pool. Return is by means of a set of diffusers located near the bottom of the pool. The piping connected to the diffusers contains check valves or some other antisiphoning device.

Immediately after a refueling, both pumps and heat exchangers are usually needed. After a few months of decay, the heat load will diminish to the point where only one pump and heat exchanger are needed. Water makeup is normally via the condensate transfer system which is connected to one of the surge tanks.

The spent fuel pool cooling system is cross-connected to one train of the RHR system at both inlet and outlet. The primary reasons for this is to allow use of RHR for supplementary fuel pool cooling during periods when an entire reactor core is off-loaded. However, this also provides a backup means of pool cooling. In addition, since the RHR suction can be lined up to the condensate storage tank or even to river water, RHR also provides a backup means of maintaining pool water inventory.

Control and operation of the spent fuel pool cooling system and RHR cross-ties are not performed from the control room; most of the valves involved are manually operated. However, if pool cooling is lost, it will take over two days for the pool temperature to rise to boiling and at least two days more for the level to drop to the top of the fuel assemblies, even under design heat load conditions. Moreover, there are level alarms on the surge tanks and the pool itself in the control room. Thus,

even though the systems are not automatic, the long time intervals involved should be sufficient to prevent problems with human confusion, etc.

WASH-1400[16] estimated the frequency of loss of one spent fuel pool cooling "train" to be 0.1/RY. We will assume, based on experience with other systems, that the conditional probabilities of the second "train" also failing due to a common-mode problem is 5%, and due to a random failure, 1.5%. In addition to this, the second pump and heat exchanger are in use (i.e., are not a redundant backup) about 30% of the time. Thus, the combined frequency of a pool heatup event is 3.7×10^{-2}/RY.

To go from a pool heatup event to an event that threatens the fuel, several other failures must occur. First, the RHR system must fail, both as a cooling system and as a supply of makeup water. For this, we assume a conditional probability of 1.5%, based on RHR reliability in the LPCI mode.[16] Second, the condensate transfer system could be used as a makeup system, either by supply to the fuel pool cooling system suction or (if the pool cooling system is isolated) by overfilling the surge tanks and causing backflow into the fuel pool. Since the condensate system is not powered by emergency power buses, it may well be put out of service by any common mode failure of the spent fuel pool cooling system. Thus, we will assume a conditional failure probability of 5% for the condensate transfer system.

Ultimately, makeup to the pool could be supplied by bringing in a fire hose (60 gpm would suffice). Although one would expect that the failure probability associated with bringing in a hose (over a period of four or more days) would be very low, it must also be remembered that working next to 385,000 gallons of potentially contaminated boiling water on top of a 10-story building is not a trivial problem. We will assume, based purely on judgment, that the conditional failure probability for this method of makeup is on the order of 5%. When these probabilities are combined, the result is a frequency of 1.4×10^{-6}/RY for an accident initiated by loss of spent fuel pool cooling.

Several events could cause an accident by draining the pool. We will first examine those events which are not likely to cause gross failure of the confinement system. First, there is the possibility of a break in the cooling system (beyond the condensate transfer makeup capacity) which we estimate to happen no more often than once per thousand reactor-years (the "S2" frequency). To drain the pool, the anti-siphoning check valves must fail (conditional probability of 8%, based on a German component failure study) and there must be a failure of the pool cooling system to isolate (conditional failure probability of 1%, based purely on judgment). RHR should provide sifficient makeup, since each RHR pump can supply 10,000 gpm and normal maximum fuel pool flow is 1200 gpm. However, RHR may be inoperable, for which we assume a conditional probability of 1.5% (based on WASH-1400).[16] When these figures are combined, the siphoning scenario is estimated to occur with a frequency of 1.2×10^{-8}/RY.

In addition, the pool could be drained by a cask drop accident (2.5×10^{-7}/RY, from WASH-1400)[16] or a turbine missile (4.1×10^{-7}/RY, also from WASH-1400).[16] Here, the RHR might not have sufficient capacity and the time frame is not as long as the previous scenarios. Based again on judgment, it was assumed that the combined RHR conditional failure probability is 10%. This gives an accident frequency of 6.6×10^{-8}/RY. If the 1.2×10^{-8}/RY from the siphoning scenario is added, the total frequency for this class of accidents is 7.8×10^{-8}/RY.

Finally, we come to two scenarios which could open up the pool to the atmosphere as well as drain it. First, there is the tornado missile ($<5 \times 10^{-6}$/RY, from WASH-1400).[16] This should not simultaneously cause failure of RHR. However, RHR may be otherwise inoperable (in this shorter

time frame) or have insufficient capacity. It was assumed that the combined RHR conditional failure probability is 5%. This gives an accident frequency of 2.5×10^{-7}/RY. Second, a seismic event could breach the pool. The WASH-1400[16] estimate for this is 10^{-5} to 10^{-7}/RY, depending on the site. We will use the higher figure, recognizing that this will limit the number of sites to which the analysis will apply.

After a seismic event severe enough to breach a seismic Category I spent fuel pool, the probability of RHR failure is higher than that of our previous scenarios. Moreover, the RHR might not be able to supply enough makeup. Finally, the time frame is very short, considering that manual valves must be opened and other earthquake-induced problems may be distracting plant personnel. We will assume that 90% of the time the draining rate will be slow enough to both be within the capacity of RHR makeup and also allow operator diagnosis and the necessary manual lineup of RHR to the pool. We will further assume a 90% probability of RHR remaining operable after the earthquake. This gives a total failure conditional probability of 19%.

Thus, for a site with a high seismic probability, the frequency of earthquake-induced accidents is estimated to be 1.9×10^{-6}/RY. Adding the tornado-induced accident frequency to this, we get a frequency for this class of accidents of 2.2×10^{-6}/RY.

Consequence Estimate

A BWR spent fuel storage pool with high density racks may contain almost 3500 fuel bundles, which is about 4½ times the inventory of the reactor core. Thus, an accident in the spent fuel pool can threaten much more fuel than a reactor accident. Compensating for this is the fact that much of the stored spent fuel has had considerable time for decay of hazardous radioactive fission products. To estimate the hazard to the public from melting of the spent fuel pool inventory, special CRAC2 runs were performed for the NRC by PNL, using a uniform population density of 340 persons per square mile, a central midwest plain meteorology, and no ingestion pathways. The calculations were performed for a spent fuel pool with a series of 1/3-core reload modules. The first module had one week decay time, the second, 18 months, the third, 3 years, and so on for a total of 13 modules. Cases were run using release fractions from the BWR-2, BWR-3 and BWR-4 release categories. This corresponds to release direct to atmosphere, release through a hole in the secondary containment, and release with the containment at design leakage and SGTS operable.

The results of the calculations and their corresponding frequencies from the previous section are given in the Table below:

Analagous Release Category	Frequency (/RY)	Consequences (man-rem)	Product (man-rem/RY)
BWR-2	2.2×10^{-8}	7.4×10^{6}	16.3
BWR-3	7.8×10^{-8}	6.5×10^{6}	0.5
BWR-4	1.4×10^{-8}	1.1×10^{6}	1.5
TOTAL:			18.3

It should be noted that this analysis is predicated on the assumption that the exposed elements will burn and that the fire will propagate throughout the pool. Additional research is necessary to

substantiate this hypothesis. Assuming a 40-year plant life, the total risk reduction is approximately 700 man-rem/reactor.

Cost Estimate

As was discussed previously, no specific solution to the potential problem had yet been settled upon as of December 1983. However, any hardware addition probably would have had to be Seismic Category I and, thus, costs were unlikely to be less than $1M/reactor. NRC costs were estimated to be negligible compared to licensee costs.

Value/Impact Assessment

Based on an estimated risk reduction of 700 man-rem/reactor and a cost of $1M/reactor for a possible solution, the value/impact score was given by:

$$S = \frac{700 \text{ man-rem/reactor}}{\$1\text{M/reactor}}$$

$$= 700 \text{ man-rem/\$M}$$

Other Considerations

It should be noted that a low seismic probability would drop the above estimates to about 200 man-rem/reactor and 200 man-rem/$M. This would not change the final conclusion. In any case, this analysis was based on a specific pool design which was selected in an attempt to represent both generic and worst-case situations. The number of plants actually at risk may be limited.

CONCLUSION

Based on the available information and the above calculations, this item was given a medium priority ranking. Studies performed by the staff in resolving the issue showed that, although most of the spent fuel pool risk comes from beyond design basis earthquakes, this risk is no greater than the risk from core damage accidents due to seismic events beyond the safe shutdown earthquake. The staff's technical findings were published in NUREG/CR-4982,[1157] NUREG/CR-5176,[1196] and NUREG/CR-5281.[1197] The regulatory analysis published in NUREG-1353[1198] showed that there was no cost-effective alternative which, if implemented, would result in a substantial safety improvement.

The staff concluded that reducing the risk from spent fuel pools due to events beyond the SSE would still leave a comparable risk due to core damage accidents. Because of the large inherent safety margins in the design and construction of spent fuel pools, this issue was RESOLVED and no new requirements were established.[1199]

REFERENCES

16. WASH-1400 (NUREG-75/014), "Reactor Safety Study, An Assessment of Accident Risks in U.S. Commercial Nuclear Power Plants," U.S. Nuclear Regulatory Commission, October 1975.

543. Memorandum for T. Speis from R. Mattson, "Proposed Generic Issue on Beyond Design Basis Accidents in Spent Fuel Pools," August 10, 1983.

544. NUREG/CR-0649, "Spent Fuel Heatup Following Loss of Water During Storage," U.S. Nuclear Regulatory Commission, May 1979.

545. Memorandum for Z. Rosztoczy from P. Williams, "Trip Report: International Meeting on Severe Fuel Damage and Visit to Power Burst Facility," April 25, 1983.

1157. NUREG/CR-4982, "Severe Accidents in Spent Fuel Pools in Support of Generic Safety Issue 82," U.S. Nuclear Regulatory Commission, July 1987.

1196. NUREG/CR-5176, "Seismic Failure and Cask Drop Analyses of the Spent Fuel Pools at Two Representative Nuclear Power Plants," U.S. Nuclear Regulatory Commission, January 1989.

1197. NUREG/CR-5281, "Value/Impact Analyses of Accident Preventive and Mitigative Options for Spent Fuel Pools," U.S. Nuclear Regulatory Commission, March 1989.

1198. NUREG-1353, "Regulatory Analysis for the Resolution of Generic Issue 82 'Beyond Design Basis Accidents in Spent Fuel Pools,'" U.S. Nuclear Regulatory Commission, April 1989.

1199. Memorandum for V. Stello from E. Beckjord, "Resolution of Generic Issue, 'Beyond Design Basis Accidents in Spent Fuel Pools,'" April 24, 1989.

ISSUE 168: ENVIRONMENTAL QUALIFICATION OF ELECTRICAL EQUIPMENT

DESCRIPTION

As discussed in SECY-93-049,[380] the staff reviewed significant license renewal issues and found that several related to environmental qualification (EQ). A key aspect of these issues was whether the licensing bases, particularly for older plants whose licensing bases differ from newer plants, should be reassessed or enhanced in connection with license renewal or whether they should be reassessed for the current license term. The staff concluded that differences in EQ requirements constituted a potential generic issue which should be evaluated for backfit independent of license renewal.[1518]

In the staff's development of an interoffice action plan to address upgrading EQ requirements for older plants during the current licensing term, the staff evaluated the technical adequacy of EQ requirements. As part of this evaluation, the staff reviewed tests of qualified cables performed by SNL, under contract with the NRC. The purpose of these tests was to determine the effects of aging on cable products used in nuclear power plants. After accelerated aging, some of the environmentally-qualified cables either failed or exhibited marginal insulation resistance during accident testing, indicating that qualification of some electric cables may have been non-conservative. Although the SNL tests may have been more severe than required by NRC regulations, the test results raised questions with respect to the EQ and accident performance capability of certain artificially-aged cables. Depending on the application, failure of these cables during or following design basis events could affect the performance of safety functions in nuclear power plants.

CONCLUSION

Based on the existence of an ongoing action plan to address the safety concern and the NRR decision[1517] to pursue its resolution, the issue was considered nearly-resolved in April 1993. It was later given a HIGH priority ranking in SECY-98-166.[1718] In accordance with an RES evaluation,[1564] the impact of a license renewal period of 20 years was to be considered in the resolution of the issue.

Accelerated aging tests on electrical equipment showed that some environmentally qualified cables either failed or exhibited marginal insulation resistance. Failure of these cables during or following a design-basis event could affect the performance of safety functions. After review and analysis of six LOCA tests, condition-monitoring tests on I&C cables, and information provided by the nuclear industry, the staff concluded that the existing equipment qualification process was adequate to ensure that I&C cables would perform their intended function. Regulatory Issue Summary 2003-09[1852] was issued in May 2003, and the issue was RESOLVED with no new requirements for licensees.[1853]

REFERENCES

380. SECY-93-049, "Implementation of 10 CFR Part 54, 'Requirements for Renewal of Operating Licenses for Nuclear Power Plants,'" March 1, 1993.

1517. Memorandum for J. Sniezek from T. Murley and E. Beckjord, "Resolution of Fatigue and Environmental Qualification Issues Related to License Renewal," April 1, 1993.

1518. Memorandum for The Chairman et al., from J. Taylor, "Environmental Qualification of Electric Equipment," May 27, 1993.

1564. Memorandum for W. Russell from E. Beckjord, "License Renewal Implications of Generic Safety Issues (GSIs) Prioritized and/or Resolved Between October 1990 and March 1994," May 5, 1994.

1718. SECY-98-166, "Summary of Activities Related to Generic Safety Issues," July 6, 1998.

1852. NRC Regulatory Issue Summary 2003-09, "Environmental Qualification of Low-Voltage Instrumentation and Control Cables," May2, 2003.

1853. Memorandum to W. Travers from R. Borchardt, "Closeout of Generic Safety Issue (GSI) 168, 'Environmental Qualification of Low-Voltage Instrumentation and Control Cables,'" August 14, 2003.

ISSUE 186: POTENTIAL RISK AND CONSEQUENCES OF HEAVY LOAD DROPS IN NUCLEAR POWER PLANTS

DESCRIPTION

Historical Background

This issue was identified[1845] by NRR in April 1999 when the concern was raised that licensees operating within the regulatory guidelines of GL 85-11[1844] may not have taken adequate measures to assess and mitigate the consequences of dropped heavy loads. Prior to the issuance of GL 85-11,[1844] GLs 80-113,[1842] 81-07,[1843] and 83-42[1847] were issued with requirements for operating licensees following the resolution of Issue A-36. In April 1996, NRC Bulletin 96-02[1848] was issued to alert licensees of potential high consequences that could result from a cask drop and to remind them of complying with existing regulatory guidelines on the control and handling of heavy loads.

Safety Significance

In nuclear plant operation, maintenance, and refueling activities, heavy loads may be handled in several plant areas. If these loads were to drop because of human error or crane failure, they could impact on stored spent fuel, fuel in the core, or on equipment that may be required to achieve safe shutdown or permit continued decay heat removal. In some instances, load drops at specific times, locations, and weights could potentially lead to offsite doses that exceed 10 CFR Part 100 limits.

Moreover, in 2003, many spent fuel pools were approaching their capacity. If a licensee elected to use long-term dry storage casks to store excess spent fuel, the large, heavy casks would have to be hoisted and transported to and from the spent fuel pool while the plant is at full power operation.

In general, very heavy load drops in BWR plants are more risk significant than very heavy load drops in PWRs because of plant systems layout. For PWRs, spent fuel cask transfers occur near ground level in an area separate from the reactor building and many safety-related systems. However, for BWRs, many very heavy loads are commonly lifted and moved on the upper floor of the reactor building or the auxiliary building. Should a floor breach occur during a load drop, there are many safety-related components located on lower floors which could be disabled. A load drop in certain areas could simultaneously initiate an accident and disable accident mitigation equipment. These types of events have the potential to defeat defense-in-depth.

ANALYSIS

Frequency Estimate

A comprehensive analysis of U.S. nuclear industry crane operating experience from 1968 through 2002 was conducted by the NRC and documented in NUREG-1774.[1846] Some of the NRC's findings were: (1) the human error rate for crane operating events increased significantly; (2) load drop events between the period 1993-2002 increased over the period 1981-1992; (3) the number of below-the-hook crane events (mainly rigging deficiencies or failures) increased greatly; (4) calculational methodologies, assumptions, and predicted consequences varied greatly from

licensee to licensee for very similar accident scenarios; (5) the number of mobile crane events declined slightly; and (6) there were few load slips or drops involving very heavy loads.

Based on actual crane operating experience data from commercial U.S. nuclear power plants, it was estimated that the average rate of drops for very heavy loads was 5.6×10^{-5}/demand. This estimate could be higher or lower at a specific plant because of varying human error rates which appeared to dominate load drop events. Based on data estimates collected from the U.S. Navy, the frequency of a handling system failure for nuclear plant cranes was estimated in NUREG-0612[747] to be between 10^{-5} and 1.5×10^{-4} per lift. However, the Navy crane data did not indicate how many lifts were actually performed, i.e., only the number of problems was quantified.

Consequence Estimate

Of the 74 plants that responded to Bulletin 96-02,[1848] only eight indicated that a consequence analysis for heavy load drops had been done at their plants. While the number of operating power plants during the 1993-2002 period only increased 9% over the previous period from 1981 to1992, the number of crane-related injuries during the 1993-2002 period increased 100% over those in the 1981-1992 period. Between 1969 and 2002, there were 10 reported crane events that led to deaths in the nuclear industry and these deaths occurred primarily during the construction phase of the plants.

Other Considerations

The following observations were documented in NUREG-1774:[1846]

(1) Although single-failure-proof cranes share many common design features (e.g., dual reeving, redundant limit switches, and redundant brakes), the remaining criteria for declaring a crane as single-failure-proof (e.g., for new cranes or upgraded cranes) were applied inconsistently. Crane manufacturers were of the opinion that NUREG-0554[1849] was ambiguous in some areas and that clarifications or changes to both NUREG-0612[747] and NUREG-0554[1849] were needed. The industry suggested that a preferred approach would be to consider adopting ASME NOG-1 (Rules for Construction of Overhead and Gantry Cranes) Type I, with minor changes, as an acceptable approach to meeting NUREG-0554[1849] and for upgrading cranes to single-failure-proof status. NOG-1 contains much more specific design criteria for single-failure-proof cranes than does NUREG-0554.[1849] In addition, while some licensees listed their cranes as single-failure-proof or indicated that they met the NUREG-0612[747] upgrade requirements, all the single-failure-proof design criteria listed in NUREG-0554[1849] may not have been fully met. Among events occurring during the period 1968 through 2002 involving cranes suitable for an upgrade to a single-failure-proof design, most load drop events were the result of poor program implementation or human performance errors that led to hoist wire rope or below-the-hook failures. All three very heavy load drops were the result of rigging failures, not crane failures. Consequently, there were no very heavy load drop events that could have been prevented had only a single-failure-proof crane been employed in the lift. However, there were load or hook and block assembly drops that could have been prevented with the use of single-failure-proof cranes and lifting devices.

(2) Between 1976 and 2003, there were 29 NRC generic communications that involved load movements at U.S. nuclear power plants, nine of which addressed: (1) heavy loads moved on the refueling floor; (2) load drop analysis for heavy loads; (3) the identification of heavy

loads that are lifted over safe shutdown equipment; and (4) the consequence of a load drop on selected equipment. Among these communications were generic letters and a bulletin which requested licensees to provide information on their crane programs for NRC evaluation. The accuracy and consistency of information received in response to some of these communications were questionable. Many of the licensees that responded to the latest request (Bulletin 96-02[1848]) provided incomplete information. Also, in many instances, information previously provided to the NRC was not verified to be accurate.

CONCLUSION

The screening and technical assessment of the issue were documented in NUREG-1774.[1846] At the completion of the technical assessment, four recommendations were made for followup guidance development by the NRC staff:

(1) Evaluate the capability of various rigging components and materials to withstand rigging errors and issue necessary guidelines for rigging applications.

(2) Endorse ASME NOG-1 for Type I cranes as an acceptable method of qualifying new or upgraded cranes as single-failure-proof and issue guidance endorsing the standard, as appropriate.

(3) Reemphasize the need to follow Phase I guidelines involving good practices for crane operations and load movements and continue to assess licensee implementation of heavy load controls in safety-significant applications.

(4) Request the appropriate industry Code Committees to evaluate the need to standardize load drop calculational methodologies for nuclear power plants.

REFERENCES

747. NUREG-0612, "Control of Heavy Loads at Nuclear Power Plants Resolution of Generic Technical Activity A-36," U.S. Nuclear Regulatory Commission, July 1980.

1845. Memorandum to A. Thadani from B. Sheron, "Proposed Generic Safety Issue - Potential Risk and Consequences of Heavy Load Drops in Nuclear Power Plants," April 19, 1999.

1846. NUREG-1774, "A Survey of Crane Operating Experience at U.S. Nuclear Power Plants from 1968 through 2002," U.S. Nuclear Regulatory Commission, July 2003.

1847. NRC Letter to All Holders of Operating Licenses, Applicants for Operating Licenses and Holders of Construction Permits for Power Reactors (Generic Letter 83-42)," December 19, 1983.

1848. NRC Bulletin 96-02, "Movement of Heavy Loads Over Spent Fuel, Over Fuel in the Reactor Core, or Over Safety-Related Equipment," April 11, 1996.

1849. NUREG-0554, "Single-Failure-Proof Cranes for Nuclear Power Plants," U.S. Nuclear Regulatory Commission, May 1979.

1850. Memorandum to J. Dyer from A. Thadani, "Proposed Recommendations for Generic Issue (GI)-186, 'Potential Risk and Consequences of Heavy Load Drops in Nuclear Power Plants,'" November 12, 2003.

1851. Memorandum to M. Mayfield from F. Eltawila, "Proposed Recommendations for Generic Issue (GI)-186, 'Potential Risk and Consequences of Heavy Load Drops in Nuclear Power Plants,'" November 21, 2003.

ISSUE 193 : BWR ECCS SUCTION CONCERNS

DESCRIPTION

Historical Background

This issue was identified[1814, 1815] by a Region III inspector and addressed the possible failure of low pressure emergency core cooling systems due to unanticipated, large quantities of entrained gas in the suction piping from suppression pools in BWR Mark I containments.

Safety Significance

Three specific concerns were listed in the identifying document:[1814]

(1) One of the bounding design basis accidents is a LOOP combined with a LOCA. While this may be bounding from an ECCS performance perspective, it may not be bounding from a gas entrainment perspective. Because the pumps may start sooner during a LOCA without a LOOP, bubbles generated during the initial blowdown may not have risen to the surface and more may become entrained in the ECCS suction piping. Since a LOCA without a LOOP was not considered, this aspect should be considered for further evaluation.

(2) An AEOD evaluation[1817] of potential air binding or performance degradation of RHR pumps only used the volume of water in the RHR suction piping to determine the amount of dissolved gas. However, the amount of gas that is potentially available to affect pump performance is the total volume of water in the suction piping and the suppression pool. The potential for pump air binding or performance degradation may need to consider the total volume of available water in determining the volume of gas.

(3) The swell/exclusion zone in the torus after a LOCA is considered to be limited to less than one diameter of the downcomer pipe. There does not appear to be a technical basis for this limitation, and it may not be conservative. The intrusion of non-condensable gas into the torus may be greater and the effect will potentially be worse due to the larger suction strainers installed in response to NRC Bulletin 96-03.[1816] Adequate bases to limit the exclusion zone to less than one diameter of the downcomer pipe should be established, especially with respect to the recently installed larger suction strainers.

Possible Solutions

There are several possible solutions to this potential problem. One alternative would be to install a sensor at the ECCS pump suctions, and inhibit either pump startup or discharge valve opening until a stable liquid-phase flow supply is verified. Another approach would be to change the sequencing of the pumps onto their individual buses during ECCS startup. Still another would be to line up one of the ECCS train suctions to the condensate storage tank or other alternative water source. In addition to the above, the installation of anti-vortexing devices to the ECCS suction strainers might be necessary.

It is not clear at this point which solution would be practical or cost-effective. However, because of the fast timing of the event in question, it is likely that the "fix" will involve some hardware modifications to the plant, and not be just procedural.

SCREENING ANALYSIS

Background

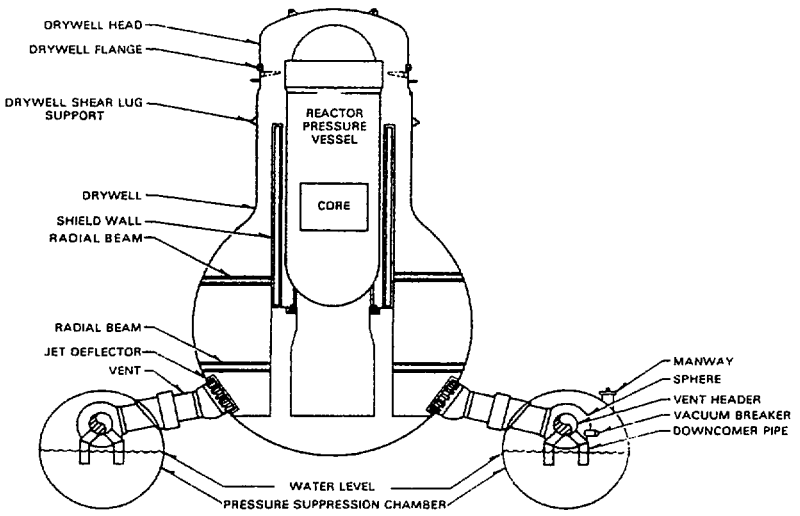

Figure 3.193-1

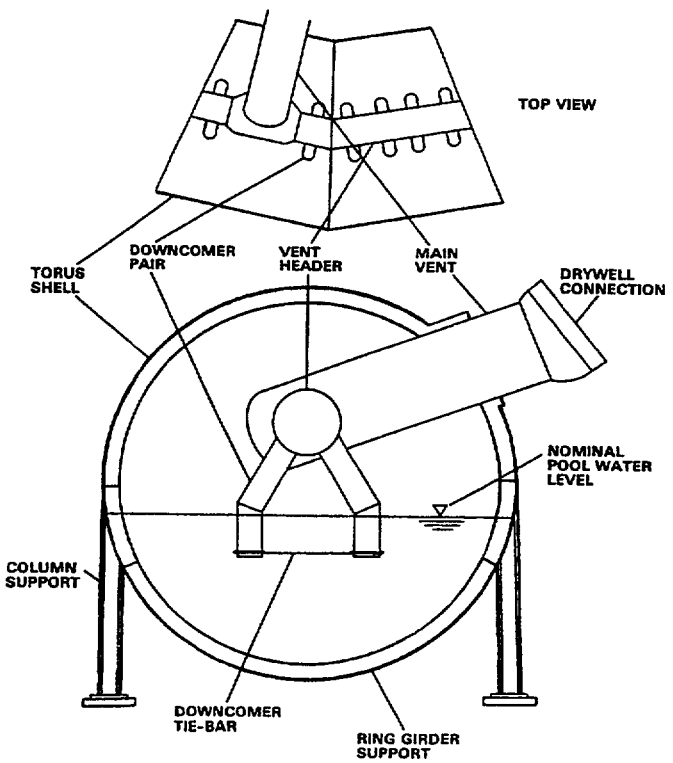

Figure 3.193-2

Pressure Suppression Design: The pressure suppression chamber, or torus, in a BWR Mark I containment, is a steel pressure vessel in the shape of a torus below and encircling the primary containment drywell, which contains the reactor vessel and recirculation system pumps and piping (Figure 3.193-1). In the event of a LOCA, steam released into the drywell airspace is forced through (typically) eight large vent pipes to the suppression chamber. The vent pipes exhaust into a large ring-shaped continuous vent header within the torus. The header is connected to a set of downcomer pipes, which extend into the suppression pool water, and end about four feet below the water surface (Figure 3.193-2). The steam is condensed in the suppression pool water, greatly limiting the peak containment pressure.

BWR Mark I containments operate with the containment atmosphere "inerted," i.e., with less that 4% oxygen by volume. Thus, in the text than follows, the term "air" generally refers to this containment atmosphere composition.

Dynamic Effects of Pressure Suppression: The dynamic effects of a primary system blowdown on the suppression chamber and pool have been studied rather extensively in the Mark I containment short-term and long-term programs (see Issue A-7, "Mark I Long-Term Program"). The primary thrust of this program was the evaluation of the loads (forces exerted) on the containment structure and components, not the effects of entrained non-condensible gases on the ECCS suction. Nevertheless, the phenomena are the same. The effects of the blowdown are well-described in NUREG-0661,[702] portions of which are quoted here:

> "With the instantaneous rupture of a steam or recirculation line, a shock wave exits the broken primary system pipe and expands into the drywell atmosphere. At the break exit point, the wave amplitude theoretically is equal to reactor operating pressure (1000 psia); however, there would be rapid attenuation as the wave front expands spherically outward into the drywell. Further attenuation would occur as the wave enters the drywell vent system and progresses into the suppression pool.
>
> "Because there would be a very rapid drywell pressure increase associated with the postulated LOCA, a compression wave would propagate into the water initially standing in the downcomers. Before this water is cleared from the downcomers, this compression wave would propagate through the suppression pool and result in a dynamic loading on the suppression chamber (torus). The compression wave could also result in a dynamic loading condition on any structures within the suppression pool.
>
> "With the drywell pressure increase, the water initially standing in the downcomers accelerates into the pool, and the downcomers clear of water. During this water-clearing process, a water jet forms in the suppression pool, and causes a potential water-jet-impingement load on the structures within the suppression pool and on the torus section beneath the downcomers.
>
> "Immediately following downcomer clearing, a bubble of [inerted] air starts to form at the exit of the downcomers. As the bubble forms, its pressure is nearly equal to the drywell pressure at the time of downcomer clearing. The bubble pressure is transmitted through the suppression pool water and results in a downward load on the torus.
>
> "When the air/steam flow from the drywell becomes established in the vent system, the initial bubble expands and subsequently decompresses as a result of over-expansion. During the early stages of this process, the pool will swell in bulk mode (i.e., a ligament of

solid water is being accelerated upward by the air bubble). During this phase of pool swell, structures close to the pool surface experience impact loads as the rising pool surface strikes the lower surfaces of the structures. This is followed by drag loads as the pool surface continues to rise past the structures. In addition to this impact and drag loads above the pool, there will also be drag loads as the bubble formation causes water flow past submerged structures and equipment.

"As the water slug continues to rise (pool swell), the bubble pressure falls below the torus airspace pressure. However, the momentum of the water slug causes it to continue to rise, this compresses the air volume above the pool and results in a net upward pressure loading on the torus. The thickness of the water slug will decrease as it rises. Aided by impact of the vent header, it will begin to break up and evolve into a two-phase "froth" of air and water. The froth will continue to rise of its own momentum, and it will impinge on structures above the pool breakthrough elevation.

"When the drywell air flow rate through the vent system decreases and the air/water mixture in the suppression pool experiences gravity-induced phase separation, the pool liquid upward movement stops, and the "fallback" process starts. During this process, structures in the torus may experience a downward loading, and the submerged portion of the torus could be subjected to a pressure increase. Following "fallback," waves may develop on the suppression pool surface, thereby presenting a potential source of dynamic loads on the downcomers, torus, and any other structures close to the water surface.

"The pool swell transient typically lasts on the order of 3 to 5 seconds. Because of the configuration of the pool, this period is dominated by the flow of the drywell atmosphere through the vent system. Steam flow will follow, beginning near the end of the pool swell transient, with a relatively high concentration of noncondensible gases. Throughout these periods, there is a significant pressure differential between the drywell and the torus. This, together with flow-induced reaction forces, leads to structural loads on the vent system."

It is common for BWRs with a MARK I containment to maintain a slight differential pressure between the drywell and the suppression pool airspace, to depress the water level in the downcomers and reduce the hydrodynamic forces caused by expelling a vertical column of water downward from the downcomer exits - the water level is maintained just above the end of the downward-leading pipes. This will reduce the hydrodynamic drag loads, but not the quantity of entrained air.

Thus, it seems reasonable to conclude that the blowdown of the primary system through the drywell and through the suppression pool is a rather violent process. Even though the suction header is somewhat protected from what is occurring within the torus itself, the originator of this issue has posed a reasonable question: will a significant amount of entrained containment atmosphere be sucked into the various ECCS pumps? Clearly, this is a question of timing, since the blowdown phenomena are transient, and the pool will eventually settle down.

Dissolved Gas: The originator of the issue also mentioned potential air binding or performance degradation of RHR pumps due to dissolved gas. This phenomenon was investigated by AEOD in 1982.[1817] Because the suppression pool water is in equilibrium with the airspace above it, there is always some gas (primarily nitrogen) dissolved in the water. When this water quenches the steam from a primary system blowdown, the water heats up. As the water temperature rises, the solubility of gases decreases, and the dissolved gas comes out of solution and is liberated into its

gaseous state. The experiments indicated that the gas was released in the form of a vast number of very small bubbles, less than one millimeter in diameter. Such small bubbles do not rise rapidly to the surface, and could be drawn into the ECCS suction piping.

ECCS System Timing: To see the effects of entrained gas, as postulated by this issue, it is necessary to review ECCS system timing. The details of ECCS initiation can vary from plant to plant. The description used here is based on Browns Ferry 1. Although this plant has been shut down for some time, it was used for many years as the basis for NRC training classes and, for this reason, its design details are readily available. The ECCS pump configuration and the details of the onsite and offsite power systems can vary significantly from plant to plant.

The originator of the issue stated[1814] the difference between ECCS initiation with offsite power available and ECCS initiation when the emergency diesel generators must be used. A diesel generator will always be wired to auto-start on loss of voltage on its associated 4160-Volt shutdown board. Thus, if a LOCA were caused by a seismic event, it is likely that the diesels will already be running when the LOCA occurs, since the same seismic event is likely to damage the transmission lines and cause a loss of offsite power.

In addition, there is an anticipatory diesel generator start signal which is generated be either a combination of high drywell pressure and "low" reactor vessel pressure, or by "low-low-low" reactor water level (by itself). The diesel generators are capable of accepting load within 10 seconds of receiving the automatic start signal. Once each diesel generator is ready, if voltage on its associated shutdown board is low or lost, the diesel generator will be connected to the board. If voltage is normal on the shutdown board, the diesel generator will continue to run at rated speed and voltage, immediately available to be connected.

There are two low pressure ECCS systems in BWRs from the BWR/3 design on. Each of these systems meets the single failure criterion. One is the LPCI mode of the RHR system. LPCI is a high volume reflooding system which injects emergency coolant into the recirculation pump discharge pipes. The flow is then directed into the jet pump nozzles and thus to the lower plenum, which eventually refills and floods the reactor core from the bottom. The other is the low pressure core spray, which has a lower flow capacity but injects water to a pair of spargers located within the reactor vessel core shroud above the core. This flow then sprays down directly into the core from above.

The low pressure ECCS system initiation sequences have several steps. (This can vary from plant to plant, but the example of Browns Ferry will be used here.) For LPCI, the pumps start on either low-low-low reactor water level or on high drywell pressure combined with low reactor vessel pressure. Upon receipt of the start signal, the response depends on the availability of power. If normal AC power is <u>not</u> available, the four main RHR pumps are started essentially simultaneously, as soon as the diesel generators are capable of taking load - about 10 seconds after diesel start, if the diesels are not already running. In contrast, if normal AC power is available, the four pumps start in a seven-second timed sequence, to prevent overloading the auxiliary power source. In either case, it takes time for the pumps to get up to speed. Meanwhile, once reactor pressure has decreased to below 450 psig, which will take about 24 seconds, the inboard LPCI injection valves will automatically open. As reactor pressure continues to fall to 230 psig, the recirculation pump discharge valves are signaled to close, to direct flow to the jet pumps and thereby to the lower plenum of the reactor vessel. Flow will not begin until the pressure in the reactor vessel drops below the discharge pressure of the RHR pumps, which will take about 30 seconds, and will not

reach full value until the recirculation pump discharge valves fully close, which will take approximately 30 seconds more.

Similarly, the low pressure core spray pumps start on either low-low-low reactor water level or on high drywell pressure combined with low reactor vessel pressure. If offsite power is available, the pumps are started in a seven-second timed sequence, just as are the LPCI pumps. If offsite power is not available, and the boards are powered by the diesel generators, the core spray pumps are started together, but seven seconds after power is available, so that they do not start at the same time as the LPCI pumps. Once reactor vessel pressure drops to 450 psig, the pump discharge valves open, allowing water to be sprayed over the core. Table 3.193-1, taken from the training manual, summarizes the operational sequence for a large break LOCA with no offsite power available.

Table 3.193-1
Fast Sequencing Scenario

Event	Time (seconds)
Design basis LOCA starts	0
Drywell high pressure and reactor low-low water level	~1
Scram, design-basis analysis assumes diesel-generators signaled to start, primary containment isolates, recirculation pumps trip	3
Low-low-low reactor water level.	~6-8
Diesel generators ready for load/If offsite power not available, start LPCI pumps.	13
LPCI pumps at speed. Signal all 4 core spray pumps to start	20
Reactor reaches 450 psig/Core spray and LPCI injection valves signaled to open	22
Core spray pumps at speed	25
Reactor reaches 230 psig/Signal recirculation pump discharge valves to close	26
Recirculation pump discharge valves begin to close	29
Core spray injection valves fully open	30
LPCI injection valves fully open	46
Recirculation pump discharge valves fully closed	62
Core effectively flooded	~108

If the diesel generators are already running, the LPCI pumps will start at low-low-low reactor water level, and the core spray pumps will start seven seconds later.

A similar table (Table 3.193-2) can be constructed for the situation where offsite power is available, and the diesel generators remain in standby. In this case, the four LPCI pumps and the four core

spray pumps are sequenced on in four seven-second intervals, one LPCI pump and one core spray pump at a time.

Table 3.193-2
Slow Sequencing Scenario

Event	Time (seconds)
Design basis LOCA starts	0
Drywell high pressure and reactor low-low water level	~1
Scram, Diesel-generators signaled to start, primary containment isolates, recirculation pumps trip	3
Low-low-low reactor water level/First LPCI and core spray pumps auto start	~6-8
Second LPCI and core spray pumps auto start	13
Third LPCI and core spray pumps auto start	20
Reactor reaches 450 psig/Core spray and LPCI injection valves signaled to open	22
Reactor reaches 230 psig/Signal recirculation pump discharge valves to close	26
Fourth LPCI and core spray pumps auto start	27
Recirculation pump discharge valves begin to close	29
Core spray injection valves fully open	30
LPCI injection valves fully open	46
Recirculation pump discharge valves fully closed	62
Core effectively flooded	~108

The plant designer has some freedom in low pressure ECCS initiation timing in that there will be no flow into the reactor vessel until the vessel pressure drops to below the shutoff head of the ECCS pumps. Thus, the pump sequencing is not critical so long as all pumps are ready by the time the vessel pressure drops sufficiently to allow injection. The designer will generally design the initiation sequencing to limit the severity of the loading transient on the power supply boards. Although individual plants will vary, the two sequencing schemes described above should bound most designs.

Effect of Concerns: The first of the three concerns asserted that, with normal AC power available, the low pressure ECCS pumps would start earlier, and under such circumstances a significant quantity of entrained gas might be drawn into the pump suctions. As can be seen from the description above, this is not necessarily true - at least in the Browns Ferry example, the pumps are actually sequenced on faster when the diesel generators are supplying power.

However, the overall concern raised by this issue appears to be well taken, regardless of this detail. According to the MARK I Long-Term Program, the pool swell transient typically lasts on the order of 3 to 5 seconds. Some of the LPCI and Core Spray pumps will be signaled to start at 6 to 8 seconds after the start of the accident - very close to this same time frame. Although there will be

relatively little flow when the pumps first start, the pump discharge valves will be opening about 22 seconds into the accident, and flow will increase rapidly thereafter.

The second of the three concerns asserted that the original AEOD evaluation[1817] calculated only the dissolved gas in the pump suction piping and should have included the entire suppression pool water inventory. It is certainly true that the entire inventory will be subjected to significant heating, and would be expected to release any dissolved gas. However, the amount of gas released into each cubic foot of water will be the same - if the bubbles remain suspended uniformly in the water, the amount of gas entering a pump suction with each cubic foot of water will not change. Most will be released in the initial heatup, as the reactor blows down. Eventually, these gas bubbles will concentrate and coalesce, but they are unlikely to do so in a downward direction. Moreover, the AEOD report[1817] concluded that the pumps were able to tolerate the 2% (by volume) air content "without a discernable loss in pump performance." There is no new information presented to invalidate this conclusion, but this source of entrained gas will be included in the analysis.

The third concern has to do with the swell exclusion zone (basically how large an area is affected by the blowdown through one of the downcomers) and the sizing of the suction strainers. The concern appears to be that the initial bubble formed during the air-clearing phase will extend to the 30-inch connecting tee, and gas rather than liquid will be drawn into the pipe. This can happen for two reasons. First, when the pumps are running, there will of course be flow into the suction piping. However, the pumps are likely running on minimum flow (if they have started at all) during the air-clearing phase of the transient, and the bubble drawn into the suction piping due to this reason would be limited in size. Second, the force of the blowdown could force some non-condensible gas directly into the suction piping, independent of any flow caused by pump operation.

Given the violent nature of the blowdown into the suppression pool, the first and third concerns do have some credibility. The basic questions are first, whether the design of the ECCS suction configuration will be able to keep significant quantities of entrained gas away from the various pump inlets, and second, whether the pool will have sufficiently settled down by the time the pumps are delivering significant flow.

Specifically, at least some of the pumps will be starting just as the air-clearing phase of the blowdown has most of the suppression pool "on the ceiling." The pump flow will just be that of the minimum flow lines (about 500 gpm) which return flow back to the suppression pool. The pumps require about 30 elevation feet of water (about 13 psi) for NPSH, which should not be a problem, since the blowdown will pressurize the suppression chamber to at least this level. However, if large air bubbles are drawn into such a pump, the result will be air binding, flow instability, high vibration, and ultimately impeller damage if the pump does not trip on high vibration or on electrical supply current instability.

Frequency Estimate

The design basis event for the large break ECCS is, as the originator of this issue stated, a large-break LOCA combined with a LOOP, plus an assumption of worst-case single failure. As was discussed above, there is some question as to whether the case with offsite power or the case without offsite power is the more limiting for this issue. Both will be considered.

Initiating Event Frequency: For the case where offsite power is available, the initiating event is a large break LOCA. Instead of using the "traditional" NUREG-1150[1081] value of 10^{-4} event/RY, a more modern value of 3×10^{-5} event/RY, based on the analysis of operating experience, will be

used. (See Appendix J of Reference 1819) However, the effect of this choice will be explored with a sensitivity study - this is not intended as an endorsement of the more modern estimate. (Further discussion can be found in the "Other Considerations" below.)

The case where offsite power is not available (the design basis) is somewhat more complicated. The random likelihood of a large LOCA occurring simultaneously with a LOOP is very small, and the probability of a LOOP subsequent to a LOCA is relatively low. The probability value used in the Peach Bottom PRA [1081] was 2×10^{-4} (mean). Combined with the 10^{-4}/RY large LOCA-initiating event frequency in NUREG-1150,[1081] the combined LOCA-LOOP event would have a frequency on the order of 10^{-7}/RY or lower. However, a seismic event could cause both a LOOP and a LOCA. (Fire-initiated LOCAs are generally stuck-open SRVs and are not applicable to this issue.)

Such a seismically-induced combined LOCA-LOOP was included in the external events analysis PRA for the Peach Bottom plant.[1081] In the Peach Bottom seismically-induced large LOCA, the frequency was computed based on the failure of the supports of the recirculation pumps. (Failures of the piping were not included as a review of their capacities showed that they were significantly higher than the pump support failures, and thus would make a negligible contribution to the initiating event frequency.) However, an earthquake severe enough to topple a recirculation pump can be expected to break the ceramic insulators on the transmission lines, thereby causing a loss of offsite power. (The ceramic insulators' fragility is listed as 0.25g and the lowest ground motion interval considered in the large LOCA analysis is 0.23g.)

To estimate the frequency of a seismically-induced LOCA-LOOP event, the seismic event frequency and consequent large LOCA probability for each ground motion interval were multiplied, and the products summed to get an overall large LOCA frequency. Since the ground motion intervals were all at or above the ceramic insulator fragility, all of these LOCAs are expected to also result in a non-recoverable LOOP. The result was 6×10^{-5}/RY for the LLNL seismic hazard curve and 2.6×10^{-6}/RY for the EPRI seismic hazard curve.[1318] Although these estimates differ by about a factor of 20, they will bound most seismic studies. In this analysis, the EPRI curve was used as being more representative of a low seismicity site. The original LLNL curve, which was modified, was used in a sensitivity study below to examine the effect of higher seismicity.

Pump Failure Probability: The parameter of greatest significance for this issue is the probability of pump failure as a function of time after LOCA initiation. This probability can be broken down into two factors: (1) the probability of failure as a function of the volume percent of entrained air in the pump suction; and (2) the fraction of entrained air in the suppression pool volume as a function of time.

The entrained air comes from the three sources discussed earlier. During the initial portion of the blowdown, the drywell atmosphere is carried along with the steam through the downcomers and injected into the suppression pool, until the drywell free volume is essentially all steam and water vapor. Also, the heatup of the suppression pool water will cause some dissolved gas to come out of solution. Finally, during the initial blowdown, the suppression pool water is violently mixed with the air in the upper portion of the torus. Once the blowdown is complete, the water will fall back down relatively rapidly into the lower portion of the torus, but it may take some time for the entrained air bubbles to rise to the surface of the pool.

Although there may be some uncertainty in the amount of non-condensible gas which will be present, the total amount (number of moles) of gas will not have a direct effect on the total void fraction in the suppression chamber free volume. The total free volume is fixed, and the total liquid

volume is also fixed since the liquid is essentially incompressible. Therefore, the total volume available to be occupied by air is also fixed. Adding more moles of air will only increase the pressure but not directly effect the total gas volume. (Pressure can cause second order effects, e.g., by driving some air back into solution, but this is not expected to be significant.)

Experimental Work: In the late-1970s, the GE performed a series of experimental tests on a full scale model of a MARK I containment.[1818] The test facility was only a portion of a full 360° torus but was otherwise full scale. Two of the tests simulated a large-break LOCA, a large steam break (Test M7), and a large liquid break (Test M8). The objective of these tests was to measure hydrodynamic loads and structural response, not air entrainment, but the tests nevertheless provided some insight for the purposes of this issue.

In these tests, after the initial blowdown, pool swell, and air-clearing, the system eventually reached a fairly stable condition in which steam exiting the downcomer formed a bubble at the downcomer exit, with steam condensing at the surface of the bubble. The situation was stable in the sense that the downcomer exit bubble presumably expanded until the bubble's surface area was sufficient for the rate of condensation at the bubble surface to match the mass flow of steam into the downcomer. (BWRs have TS limits on initial suppression pool temperature that are intended to ensure stable steam condensation after a blowdown.)

Two phenomena were observed in the tests: chugging and condensation oscillations. Chugging occurred during some of the tests simulating small steam breaks, which are not of significance for this issue. However, condensation oscillations, which were generated by the condensation process at the steam bubble surface, continued for an extended period of time and were observed in all tests, including those tests simulating the large steam and liquid breaks. Because of these condensation oscillations, a certain degree of turbulence will be present in the suppression pool throughout an actual LOCA event.

Although the instrumentation and measurements in these tests were geared toward structural impacts, there were some observations that have some significance for this issue. For example, in Test M8, the large liquid break, the weight percent of air was 3% in the south vent line three seconds into the test. By 15 seconds, it had dropped to 0.2%, and by 25 seconds it had dropped to 0.09%. However, at 40 seconds, the weight percent of air went back up to 0.4%. Thus, there is experimental evidence that air injection will continue at a low rate for some time after the pool swell, but the majority of the drywell atmosphere is injected into the pool very early.

Also, some visual observations were made during the tests. These observations were limited in the sense that the condensing vapor in the wetwell airspace tended to obscure the view, but it was noted in the report that the liquid surface exhibited standing waves that appeared to be correlated with the condensation oscillations associated with the downcomers. After the initial pool swell, standing waves of roughly 2 to 3 inches in amplitude were observed after 13 seconds from test initiation for the liquid break, and after 20 seconds for the steam break. Thus, in this time range, the experimental evidence seems to point to an agitated pool, but a pool with a reasonably well-defined surface.

Bubble Rise Phenomena: The GE experimental work did not record the parameters of most interest for this issue, and thus it is necessary to use some more general knowledge of such phenomena. According to the BWR Fundamentals training manual, the height of the suppression pool air and liquid space (i.e., minor diameter of the torus) is typically about 29 feet. After being forcibly thrown up "to the ceiling" by the initial blowdown, the suppression pool water will fall back in about one

second, held back only by air drag. However, entrained air bubbles in the pool will take much longer to rise to the surface, because of the viscosity of the water.

Steam bubbles in subcooled water will break up and disperse quite rapidly, and the increased surface area of the smaller bubbles will lead to rapid condensation. Air bubbles, in contrast, may break up or coalesce, depending on size and surroundings, but will persist until they rise to the pool surface.

In theory, air bubbles will rise and achieve a terminal velocity governed by Stoke's law. Although experiments have shown that Stoke's law works reasonably well for individual bubbles small enough (under 2 mm) for the flow around them to be laminar, a number of effects alter the terminal velocity in practice. An extensive discussion of these effects is contained in "Liquid-Gas Systems," (Fair, J.R., Steimeyer, D.E., Penney, W.R., and Brink, J.A., in "*Chemical Engineers' Handbook*," Perry, R.H., and Chilton, C.H., Fifth Edition, McGraw-Hill, New York, 1973) which include the following:

- At a Reynolds number of about 100, a wobble occurs that causes bubbles to rise in a spiral or helical path.
- Above about 2mm, the bubbles change from spheres to ellipsoids, and above 1 cm, they become lens-shaped.

Both of these effects will tend to lengthen the time bubbles will remain in the suppression pool. In addition, "Liquid-Gas Systems," (Fair, J.R., Steimeyer, D.E., Penney, W.R., and Brink, J.A., in "*Chemical Engineers' Handbook*," Perry, R.H., and Chilton, C.H., Fifth Edition, McGraw-Hill, New York, 1973) discusses two more effects that occur when bubbles are produced "in clouds" and interact with each other. These two effects actually oppose each other:

- A "chimney" effect can develop in which the cloud of bubbles cause a significant upward current in the middle of the bubble stream, which will accelerate bubble rise.
- The proximity of bubbles to each other will hinder the downward flow of the liquid displaced by the bubbles, which will slow the rate of bubble rise.

Thus, the velocity of bubble rise is not easily calculated from theoretical principles, and empirical data must be used. Considerable experimental data can be found in: (1) Fair, J.R., Steimeyer, D.E., Penney, W.R., and Brink, J.A., "Liquid-Gas Systems," in Perry, R.H., and Chilton, C.H., "*Chemical Engineers' Handbook*," Fifth Edition, McGraw-Hill, New York, 1973; and (2) Griffith, P., "Two-Phase Flow," in Rohsenow, W.M., Hartnett, J.P., and Ganić, E.N., "*Handbook of Heat Transfer Fundamentals*," McGraw-Hill, New York. However, these references are intended for chemical engineering applications where bubble columns are intentionally designed to produce a large number of small bubbles, to maximize the interfacing surface area over which chemical reactions can occur. For bubble diameters of a few millimeters, these references predict a bubble rise velocity on the order of about 0.8 feet/second. It is unlikely that bubbles in a suppression pool will be quite this small.

However, CEN 420-P, Volume 1,[1820] describes experimental work done in support of small break LOCA analyses, which is likely to be a more realistic estimate for a suppression pool situation. This correlation gives a "best" estimate of about 3 feet/second at atmospheric pressure, with the data ranging from about 1.7 to 3.3 feet/second. For purposes of this issue, a best estimate of 3

feet/second will be used, but a sensitivity study will be done to see the effect of a rise velocity as low as 0.8 feet/second.

Effect of Turbulence: Bubble rise experiments are generally performed in still water, which will not be the case for a suppression pool right after the blowdown associated with a large-break LOCA. There will be considerable turbulence caused by condensation oscillations arising from steam condensation at the downcomer exits. This effect is not likely to cause significant change in the bulk bubble rise velocity, since this turbulence is equally likely to force a bubble up or sideways as to force it down, with little net effect. (This turbulence may cause some breakup of larger air bubbles into many smaller bubbles, however.)

However, there are likely to be residual macroscopic "swirling" currents induced by the initial blowdown and collapse of the pool swell, plus significant convection currents induced by the ongoing heating of the pool at the downcomer exits. These currents will force bubbles down in some areas, and up in other areas. The net effect on the rate of bubbles of entrained air being brought to the liquid surface (and thus leaving the liquid volume) will not be great, but these currents will reduce stratification of the bubbles in the pool, keeping the entrained air more well mixed.

Phase Separation: If every air bubble were the same size and rose at the same velocity in still water, the percentage of entrained air would drop linearly to zero at a time equal to the pool depth divided by the velocity of rise. With a pool depth of 14 to 15 feet and a bubble rise velocity of three feet per second, this would be about 5 seconds. If the water were completely still, any calculations based on the entire pool depth would be an overestimate, since the ECCS pumps take suction from the bottom of the pool, not at the pool surface. However, because of the presence of turbulence and currents in the pool, no credit will be taken for such stratification within the pool. Under this assumption, the opposite of completely still water, the bubbles are assumed to remain uniformly mixed in the water volume, and the void fraction can be readily estimated for these conditions.

Consider a pool of irregular shape and depth, with water volume V and surface area A, containing N bubbles rising with velocity v. If the pool is constantly being mixed such that the bubbles remain uniformly distributed over the volume V, the bubble density is then a constant (with respect to position) equal to N/V.

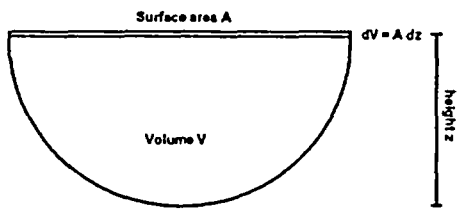

Figure 3.193-3

Consider a volume element dV at the surface of the pool, with area A and thickness dz (see Figure 3.193-3).

$$dV = Adz$$

The number of bubbles in this volume is:

$$dN = \left(\frac{N}{V}\right)dV = \frac{N}{V}Adz$$

The change in the number of bubbles in the volume V per unit time is:

$$\frac{dN}{dt} = -\frac{N}{V}A\frac{dz}{dt} = -\frac{N}{V}Av$$

where v is the bubble rise velocity. The integration of this equation is straightforward:

$$\frac{dN}{N} = -\left(\frac{Av}{V}\right)dt$$

$$N = N_0 e^{-\frac{Av}{V}(t-t_0)}$$

The number of bubbles then follows an exponential decay law, where N_0 is the number of bubbles at time t_0. Interestingly, the time constant is not directly related to the depth of the pool, but instead is related to the surface to volume ratio and the bubble rise velocity. The semicircular shape of the bottom of a Mark I suppression pool actually contributes to a more rapid loss of air bubbles as compared to a rectangular shape, since there is more surface area per unit volume in a pool with a semicircular bottom.

If the water depth z is approximately equal to the minor radius of the torus, the surface to volume ratio for this horizontal semi-cylindrical shape can be approximated by:

$$\left(\frac{A}{V}\right) = \frac{2z}{\frac{1}{2}\pi z^2} = \frac{4}{\pi z}$$

where z is 15 feet. For a relatively simplistic case where all bubbles have the same volume V_b and rise velocity v, the void fraction VF in the pool is:

$$VF(t) = \frac{NV_b}{V} = N_0\frac{V_b}{V}e^{-\frac{4v}{\pi z}(t-t_0)} = VF(t_0)e^{-\frac{4v}{\pi z}(t-t_0)}$$

The void fraction then begins at an initial value $VF(t_0)$ and drops exponentially with time.

As described above, the bubble rise velocity will be assumed to be 3 feet/second. The pool depth (and torus minor radius) will be assumed to be 15 feet. The "start" time t_0 will be assumed to be at the end of the blowdown-induced pool swell, which is 8 seconds. At this time t_0, the initial void fraction will be assumed to be 50%, corresponding to the air and water volumes being equal and completely mixed.

This does introduce some conservatism, in that at 50% void fraction, phase separation is due as much to falling droplets as it is to rising bubbles, and the two phases will begin to separate faster than this primitive model would predict, at least for a few seconds. The model's prediction is shown in Figure 3.193-4.

Effect of Entrained Air on Pumps: Cavitation has been cited as one of the most commonly occurring and damaging problems in liquid pump systems (Lobanoff, V.S., and Ross, R.R., "*Centrifugal Pumps: Design and Application*," Gulf Publishing Co., 1992.). In most nuclear engineering applications, the problem is related to insufficient net positive suction head (NPSH), where the local pressure at the eye of the impeller drops below the vapor pressure of the liquid being pumped, causing bubbles to form. When these bubbles pass through the impeller to a region of higher pressure, where the local pressure is higher than the vapor pressure of the liquid, the bubbles collapse rather violently, creating shock waves in the liquid. Even minor cavitation can produce noise, vibration, loss of head and capacity, and erosion of the impeller and casing surfaces. More severe cavitation can cause cracking of the impeller vanes and pump failure.

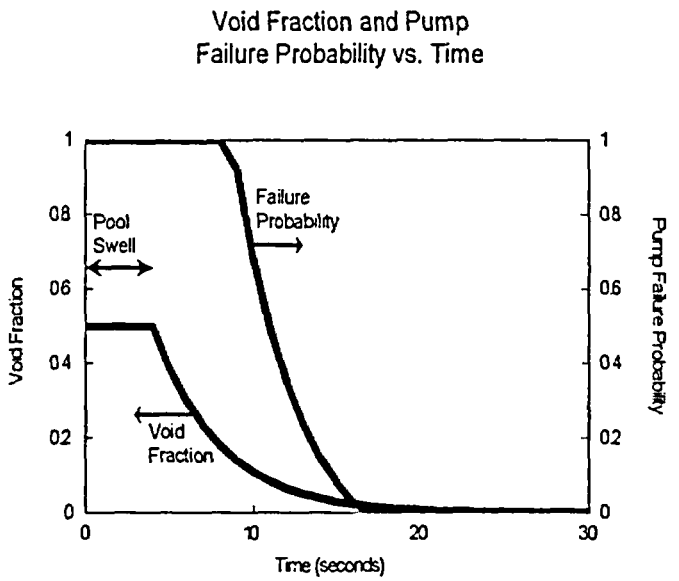

Figure 3.193-4

The specific situation envisioned by this issue is slightly different, in that the cavitation results from entrained air rather than from low pressure. Bubbles formed in this manner will not violently collapse as would bubbles filled with water vapor. In theory, a true "froth" consisting of extremely small bubbles of a non-condensible gas would only have the effect of reducing the density of the pumped liquid, resulting only in some loss of pumping efficiency. However, air bubbles tend to collect at the eye of the impeller, resulting in air binding. In additions, if larger bubbles occur, the result can include turbulence, imbalances in the impeller, severe vibration, and pump failure. A training manual ("*Predicting NPSH for Centrifugal Pumps*," *www.pump.zone.com/articles/00/dec/feature1.htm*) quoted by the originator of this issue makes the claim, "A centrifugal pump can handle 0.5% air by volume. At 6% air the results can be disastrous."

Pump Failure Probability: It seems reasonable to assume that the pump failure probability due to entrained air would be essentially unity if the pumps were to be started right at the point of violent

pool swell, but that this failure probability contribution would drop fairly rapidly to essentially zero after 20 seconds or so, based on the visual observations in the GE tests. Because the pumps will be starting during this interval, it will be necessary to make some assumptions on how the pump unavailability varies with time.

NUREG/CR-2792[1821] specifically studied the effect of air and debris ingestion in RHR and containment spray pumps. This study concluded that "for air ingestion level less than about 2%, degradation is not a concern for flows near rated conditions; for ingestion levels in the neighborhood of 5%, performance is dependent on pump design; and for ingestion greater that about 15%, most pumps are fully degraded." It was assumed that the pump failure rate is zero below 2% void fraction, is unity above 15%, and rises linearly from zero to unity between 2% and 15%. This result can be combined with the void fraction estimates described earlier to give a pump failure probability as a function of initiation time, as shown in Figure 3.193-4.

It should be noted that NUREG/CR-2792[1821] also states that a pump can become air bound at very low flow rates, if operation continues over an extended period of time. Although the pumps will be operating at low flow under the conditions of this issue, this will not be for an extended period of time, and thus the full flow assumptions will be used.

Error Analysis Assumptions: The probability of pump failure due to entrained gas was estimated by using start timing for each group of pumps and inputting this time into the pump failure probability function, as illustrated in the second curve of Figure 3.193-4. In order to perform at least a first effort at an error analysis, the following variations were used:

- The end of pool swell, nominally at 4 seconds, was varied between 3 and 5 seconds, which is the interval given in the literature.
- The bubble rise velocity, nominally three feet per second, was varied between 2.2 and 3.8 feet/second, based on an examination of the data in CEN 420-P.[1820]
- The pump failure probability curve was varied by shifting entire function such that the "breakpoint" where the failure probability drops to zero moved from a void fraction of 0.02 to a void fraction of zero, and then shifting the function a symmetric amount in the opposite direction. (The rationale was that the failure probability due to entrained gas would have to go to zero at a zero void fraction.)
- The three parameters were each set at their two extremes and failure probabilities for each pump startup time were calculated.
- The resulting ranges at each startup time were assumed to be 95% intervals in a normal distribution.

In addition to this, the effect of bubble rise velocity was also explored with a sensitivity study.

ECCS Failure Probability: The hypothesis of this issue was that the blowdown into the suppression pool is of sufficient severity and duration to cause a loss of NPSH to the LPCI and core spray pumps because of the entrained gas. This would be a common mode failure of the entire low pressure ECCS. The first question is whether the pumps could survive this situation. If the pumps cavitate and the breakers trip, in theory the pumps could be re-started. However, emergency systems are generally not equipped with any more protective trips than are absolutely necessary.

Of course, if the pumps are damaged, there will be no recovery. It will be assumed for the purposes of issue screening that a pump will fail and not be recoverable if a significant quantity of entrained gas is drawn into its suction.

For the purposes of this issue, the success criteria used in the PRA[1081] for the Peach Bottom plant will be used. Specifically, the success criteria are that either one RHR pump (in LPCI mode) or two core spray pumps will provide sufficient cooling to avoid severe core damage.

As was described earlier, there is more than one possible pump start sequence, depending on specific plant design and depending on whether offsite power is available. The approach will be to use the Browns Ferry sequencing, and then reverse the slow and fast sequences and re-analyze them. This should bound the spectrum of plant designs.

Fast Sequence: An event tree was drawn for the fast sequence, which in the Browns Ferry design corresponds to a LOCA with offsite power unavailable. The initiating event frequency is a seismic event which induces failure of the ceramic insulators on the plant's transmission lines, and also breaks the lateral supports on a recirculation pump. The LOCA is caused by the tipping of the pump.

In this scenario, the diesel generators are likely to be running before the LOCA occurs. All four RHR pumps will start (in LPCI mode) on low-low-low reactor water level six seconds into the accident. All four core spray pumps will start seven seconds later.

Two assumptions are necessary to create an appropriate event tree. First, it is assumed that if a set of pumps does not fail due to entrained gas early in the accident, pumps which are sequenced on later in the transient also do not fail. That is, because the void fraction in the pump suction piping is assumed to be monotonically decreasing, sequences where early pumps do not fail and later pumps do fail are not allowed.

Second, it is assumed that sequences which do not contain at least one pump failure due to entrained gas are not to be included. This is because the parameter of interest for screening generic issues is the change in CDF due to entrained gas. Sequences that lead to core damage but which do not include failures due to entrained gas certainly exist, but are not developed here, since they would be there even if the entrained gas issue were completely fixed.

The event tree for the fast scenario is shown in Figure 3.193-5. (The very first sequence is not developed, since it does not contain any failures due to entrained gas.) The event tree is rather simple in that, if the RHR pumps cavitate, the core spray pumps can fail either due to entrained gas or due to other causes - the "V2" top event in the NUREG-1150[1081] analysis.

This event tree was analyzed using the SAPHIRE code, using a Monte Carlo analysis of 10,000 samples and an analysis cutoff of 10^{-10}. The results were as follows:

Table 3.193-3
CDF for Fast LOCA Sequences

Sequence	Point Estimate	Mean	5th percentile	Median	95th percentile
3	2.3×10^{-9}	1.4×10^{-9}	5.9×10^{-13}	5.5×10^{-11}	4.0×10^{-9}
4	6.1×10^{-7}	1.3×10^{-6}	4.5×10^{-10}	3.8×10^{-8}	2.8×10^{-6}

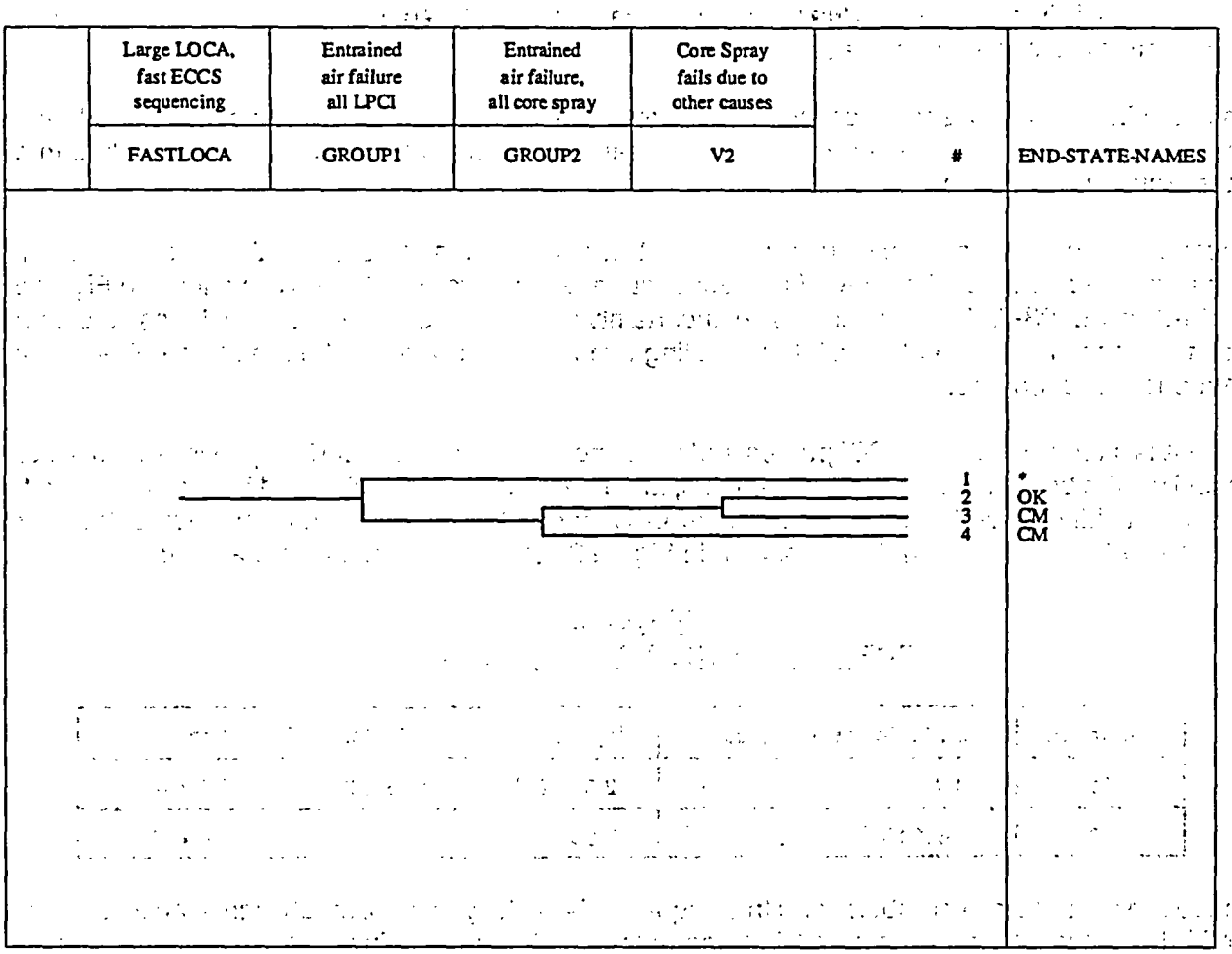

Figure 3.193-5

(Results in Table 3.193-3 and in subsequent tables were given to two significant figures for the convenience of the reader who wishes to follow the calculations, and were not intended to imply that these parameters were known to this accuracy, as the percentile range given in the table itself clearly shows.)

Clearly, this event tree is dominated by sequence number four, where all four LPCI pumps fail due to air entrainment with probability near unity, and the four core spray pumps, which are sequenced on in a group just four seconds later, also fail due to air entrainment with about a 24% probability.

Slow Sequence: The slow sequence corresponds to a LOCA with offsite power available. In this scenario, the pumps are sequenced on in four groups. Each group contains one RHR pump (in LPCI mode) and one core spray pump.

There are two possibilities in this scenario, depending on whether the first RHR pump sequenced to start injects into the intact or into the broken recirculation loop. That is, the pipe break will be in one of the two recirculation loops, and the break will divert injection flow from either RHR pumps 1 and 3, or pumps 2 and 4. (It is assumed that the plant does not use LPCI selection logic.)

Because the failure probability due to entrained gas will be different for the four pumps, two event trees were developed, one for each situation.

As in the fast scenario, sequences with no failures due to entrained gas were not developed, and sequences with a successful pump start for an early group but with an entrained gas failure in a later group were not allowed.

Because the four start sequencing groups do not turn on all trains of a system all at once, the event trees are more complex than that of the fast sequence. The two event trees are shown in Figures 3.193-6 and 3.193-7. Because there is no uncertainty in the number of recirculation loops, and both loops are assumed to be identical, the initiating event frequency is one-half the large pipe break frequency for each tree.

Case A is a case where the LPCI pumps that sequence on in Groups 1 and 3 inject into the reactor vessel via the broken recirculation loop. Thus, LPCI trains 1 and 3 are disabled by the LOCA itself, and the accident must be mitigated by either LPCI pump 3, LPCI pump 4, or any two of the four core spray trains. The event tree is shown in Figure 3.193-6. The results were as follows:

Table 3.193-4
CDF for Slow LOCA Sequences (Case A)

Sequence	Point Estimate	Mean	5th percentile	Median	95th percentile
11	1.7×10^{-9}	1.3×10^{-9}	2.5×10^{-11}	4.1×10^{-10}	5.1×10^{-9}
16	3.6×10^{-10}	6.1×10^{-10}	7.0×10^{-12}	1.6×10^{-10}	2.4×10^{-9}

These are clearly small numbers, and this sequence is unlikely to be of much significance, at least for this base case. It should be noted that Sequence 11, although low in absolute numbers, is much higher than a hand calculation first indicated. This is because the RHR pump in LPCI Train B and the Core Spray pump in Core Spray Train B are associated with some of the same components in the emergency service water system. If it were not for this common cause failure mechanism, Sequence 11 would be down in the 10^{-12} range. Also, it should be noted that the underlying PRA models used a cutoff of 10^{-10} for truncation when building the cut sets, and these numbers are close to this cutoff. Thus, some sequences may be missing, and these numbers may be underestimates. However, because these sequences are of relatively little significance in the total, this should not affect any conclusions.

Case B is a case where the LPCI pumps that sequence on in Groups 2 and 4 inject into the reactor vessel via the broken recirculation loop. Thus, LPCI trains 2 and 4 are disabled by the LOCA itself, and the accident must be mitigated by either LPCI pump 1, LPCI pump 3, or any two of the four core spray trains. The event tree is shown in Figure 3.193-7. The results for Case B are as follows:

Table 3.193-5
CDF for Slow LOCA Sequences (Case B)

Sequence	Point Estimate	Mean	5th percentile	Median	95th percentile
9	1.7×10^{-9}	1.3×10^{-9}	2.5×10^{-11}	4.1×10^{-10}	5.2×10^{-9}
13	2.7×10^{-9}	4.5×10^{-9}	2.6×10^{-11}	7.0×10^{-10}	1.6×10^{-8}

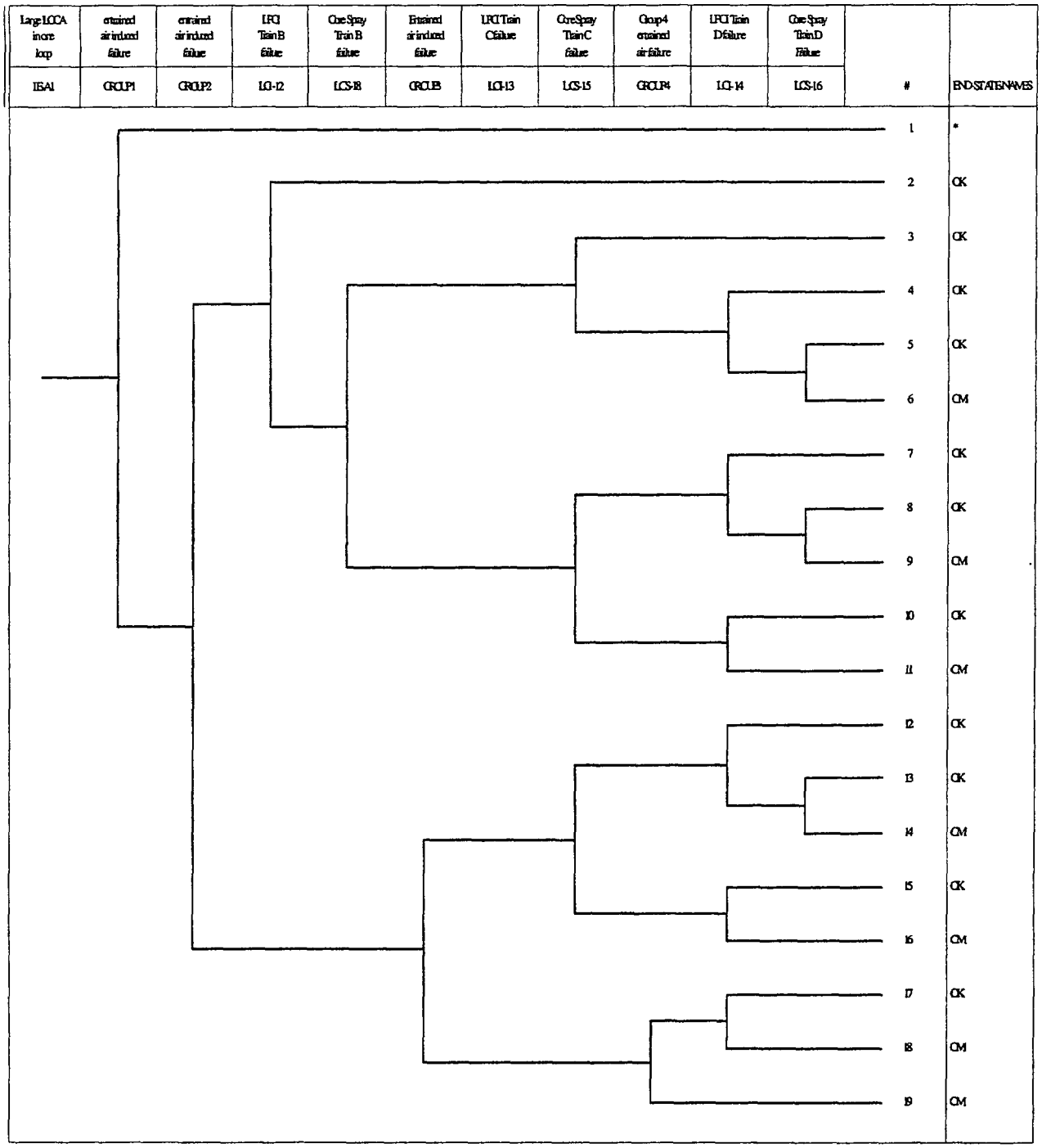

Figure 3.193-6

The numbers are very close to those of Case A. This is primarily because the first few pump groups have failure probabilities of essentially unity, either from gas entrainment or from flow diversion through the broken piping.

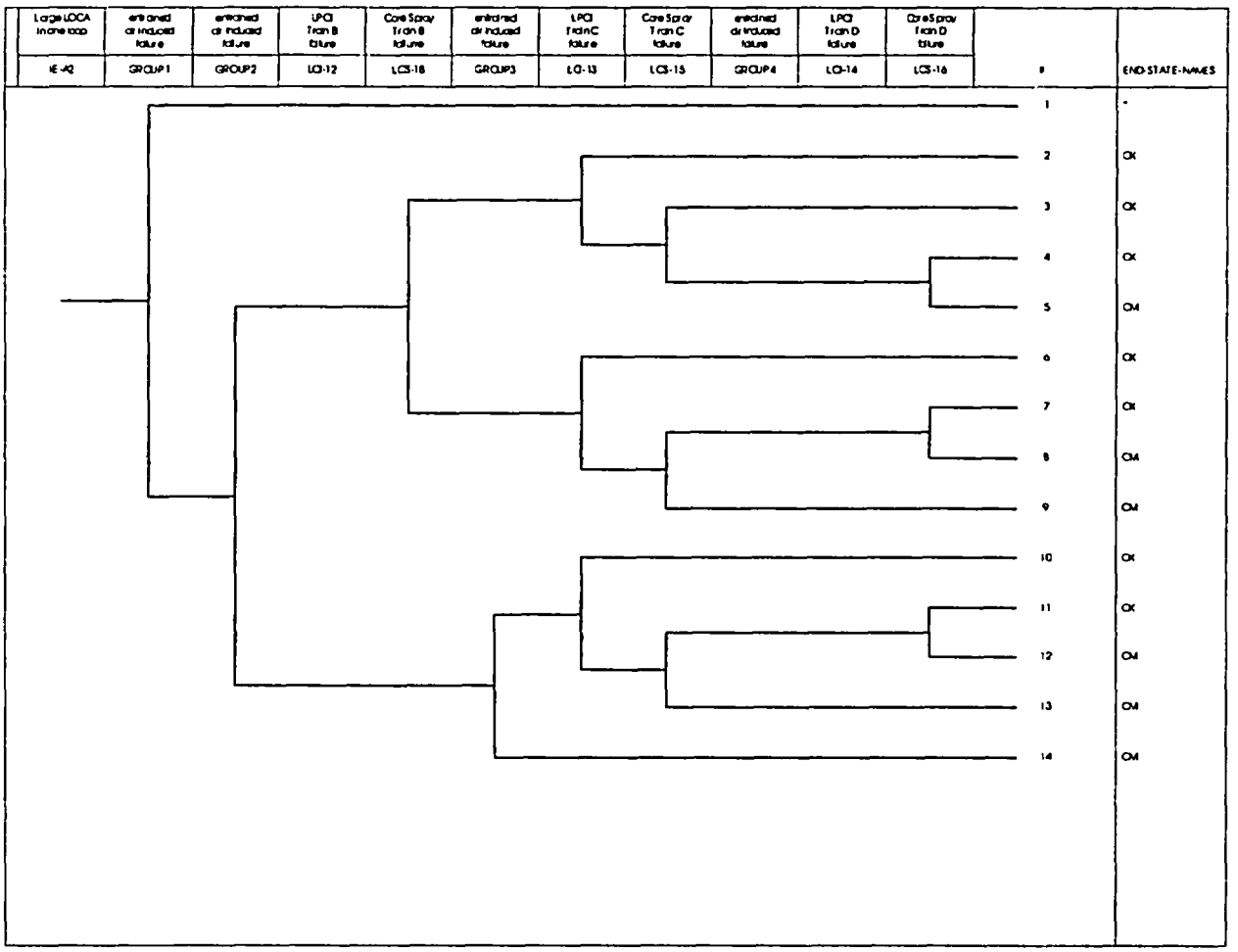

Figure 3.193-7

Combined Results, Base Case, Fast and Slow Sequences: The overall results, adding up the two fast sequences and four slow sequences, are as follows:

Table 3.193-6
CDF (Base Case, Total All Sequences)

	Point Estimate	Mean	5th Percentile	Median	95th Percentile
Combined CDF	6.2×10^{-7}	9.2×10^{-7}	2.7×10^{-9}	4.7×10^{-8}	2.8×10^{-6}

Of this total, about 98% is from sequence 4 of the fast LOCA sequence, in which the LPCI pumps are disabled by entrained gas, and seven seconds later the core spray pumps are disabled by entrained gas.

Sensitivity Studies: Four sensitivity studies were performed. All four use the model described above as the base case. The results are tabulated as follows in Table 3.193-7:

Table 3.193-7
CDF (Base Case and Sensitivities)

Case	Point Estimate	Mean	5th percentile	Median	95th percentile
Base case: Combined CDF	6.2×10^{-7}	9.2×10^{-7}	2.7×10^{-9}	4.7×10^{-8}	2.8×10^{-6}
First case: fast sequencing when offsite power is available	4.7×10^{-6}	8.0×10^{-6}	1.2×10^{-7}	2.4×10^{-6}	3.2×10^{-5}
Second case: high seismicity	1.4×10^{-5}	2.1×10^{-5}	1.7×10^{-6}	8.7×10^{-5}	6.2×10^{-5}
Third case: slow bubble rise	1.9×10^{-5}	1.8×10^{-5}	1.6×10^{-6}	9.1×10^{-6}	5.9×10^{-5}
Fourth case: original LOCA frequency	6.6×10^{-7}	9.9×10^{-7}	1.1×10^{-8}	1.0×10^{-7}	3.0×10^{-6}

The first case was done by reversing the initiating event frequencies for the fast and slow sequences, which is equivalent to a plant with pump initiation sequencing that is faster when offsite power is available - the case brought forth originally in this issue. For this case, the mean CDF rises to 8×10^{-6}, almost all of which comes from Sequence 4.

The second case uses the original NUREG-1150[1081] seismic frequency based on the original LLNL ground motion curve. This case corresponds to a plant wired like Browns Ferry, i.e., where the pumps are sequenced on more rapidly when using the diesel-generators, but located within a high seismic zone. Not surprisingly, over 99% of the CDF again comes from Sequence 4 of the fast LOCA sequence.

The third case uses the base case, but with the bubble rise frequency set to 0.8 feet/second, which corresponds to a suppression pool mixed with very small bubbles - intended to bound the phenomenological aspects of this issue. This case was done to investigate the effect of a slow bubble rise, as would be experienced if the bubbles were all one centimeter or less in diameter. In this case, the pump failure probability is essentially unity except for the fourth group, which has a failure probability of about 65%. (This may not be a physically realistic case, but it does imply that some care should be taken to keep the suppression pool water free of cleaning agents and other surfactants.)

The fourth case was done to illustrate the sensitivity of this model to the spontaneous LOCA frequency. Use of the original LOCA frequency of 10^{-4}/RY instead of the more modern estimate in NUREG/CR-5750,[1760] has only a minor effect on the overall CDF. This is because the base case is dominated by the seismic-induced LOCA sequences.

Consequence Estimate

For this issue, all of the sequences that result in severe core damage include failure of all four RHR pumps. These same pumps are also used for suppression pool cooling and for containment spray. Thus, each of these core damage sequences will also result in containment failure due to overpressure.

Cost Estimate

The LERF estimates are such that the cost will not affect the conclusion. Thus, a cost estimate was not performed for this issue.

Other Considerations

Effect of Pump Suction Configuration: The analysis assumes that the various LPCI and core spray pumps take suction directly from the suppression pool. The actual suction piping configuration varies from plant to plant. In the case of Browns Ferry, these pumps take suction from a large (typically 30-inch diameter) suction header pipe in the shape of a large ring that encircles, and is mounted below, the torus (see Figure 3.193-8). The suction header is connected to the bottom of the suppression pool by (typically) four 30-inch connecting lines ("tee's"). Each connecting line is equipped with a strainer to keep debris out of the suction header. As the originator of this issue pointed out, these strainers were recently re-sized to keep them from being plugged with paint flakes and other small debris. The four connecting pipes are located in "unused" portions of the suppression chamber so that they will not be directly subjected to the water jet issuing from the downcomers. ("Unused" is defined as outside of the swell exclusion zone of any downcomer pipe, as mentioned in the third concern of this issue.) Thus, it can be seen that the design is such that the suction header is somewhat decoupled from the phenomena associated with the pressure suppression function, for plants which are so equipped.

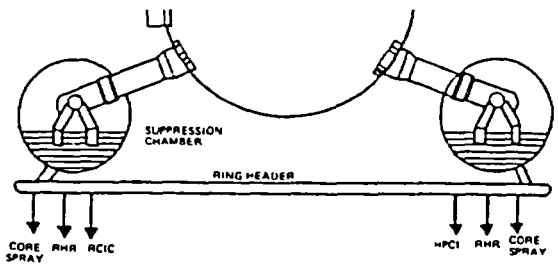

Figure 3.193-8

Nevertheless, there are two possibilities for entrained gas to be drawn into the pumps. First, once the first group of pumps start, any entrained gas present near the connecting tees will be drawn into the ring header, which is common to all the pumps, even those pumps which may be started later.

The second possibility is a function of the asymmetry of the blowdown, in that forcing a bubble into one of the four tees implies that an equal volume of displaced water must flow out of the other three tees. (If all four tees were impacted equally, there would be no bubble ingress.) For bubbles to be forced into the piping in this manner, one tee would have to experience forces significantly greater than the other three tees. This may well be possible.

Special ECCS Pumps: Some plants may have installed ECCS pumps which are especially designed to operate under adverse conditions, such as pumping suppression pool water which is already at or near saturation temperature. Such a pump might be able to survive the presence of significant entrained gas.

Other Containment Designs: Although this screening analysis was performed on a MARK I containment design, the phenomena of interest are also possible in the MARK II and III designs, and these designs should be included in any task action plan for this issue.

Other Suppression Pool Experiments: In the course of the discussion and review of this analysis, it was mentioned that some further experimental work on blowdown phenomena in suppression pools may have been performed overseas, possibly for the Mark II design. Accessing foreign experimental data is generally beyond the scope of a screening analysis such as this, but should be considered as part of any follow-up work.

Initiating LOCA Frequencies: Two frequencies for the large LOCA were considered in this report, the "traditional" frequency from WASH-1400[16] and NUREG-1150,[1081] and a newer, lower frequency described in NUREG/CR-5750.[1760] The two estimates only differ by about a factor of 3, and in any case, even the lower of the two leads to a conclusion that this issue should be studied further. However, it should be noted that still more work in this area is currently in progress, and it is not the intent of this screening analysis to either anticipate the outcome of this new work or to in any way endorse either of the two existing estimates.

Defense-in-depth: The postulated effect of entrained gas bubbles is to defeat a major portion of the low pressure ECCS. Even if the low initiating event frequency results in a low frequency for most of the accident sequences, there is a policy question regarding the wisdom of allowing such a failure, i.e., what is the purpose of maintaining the first group of pumps if there is a high likelihood of failure for this group? This consideration is tempered by the fact that: (a) the estimates used in this screening analysis contain some conservatism, and it is really not known for certain that the first group will fail; and (b) this really applies only to the very large break LOCA, which will violently entrain air in the suppression pool, and the rest of the LOCA break spectrum may not be affected.

Other Means of Mitigation: Given this operational event, the next question is, if LPCI and core spray are ineffective due to entrained gas, what other systems are available to supply coolant to the core? HPCI and RCIC are initially lined up to take suction from the condensate storage tank, but these two systems are turbine-driven, and will not be available since the large break in the primary system will depressurize the reactor, and sufficient steam pressure will not be available.

If offsite power is available, some coolant will be supplied by normal feedwater. However, this will be of limited value, for several reasons:

(1) Once the level drops to the low-low setpoint, the main steam isolation valves will be signaled to close. For those plants with turbine-driven main feedwater pumps, high pressure feedwater will be lost since there will be no steam for the feedwater turbines.

(2) The condensate and condensate booster pumps will continue to run, and are capable of pumping water through the feedwater pumps and to the reactor. The condensate boosters normally run with a discharge pressure of roughly 300 psig, and have a capacity comparable to LPCI. (Some plants have high-head condensate pumps and do not have condensate boosters, but these systems will have a similar performance.) Unlike LPCI, there will be considerable line losses since the flow will have to travel through the feedwater pumps and feedwater heater strings, plus a significant length of piping to the reactor. The flow of condensate will not be large until reactor pressure has dropped well below 300 psig. The primary system does depressurize quite rapidly, however. (Also, the situation will be more favorable in certain older plants which use motor-driven feedwater pumps.)

(3) The main condenser hotwell does not contain enough condensate to last more than about three minutes at full flow. Although it is possible to transfer coolant to the hotwell from the condensate storage tank, the transfer is not high capacity.

(4) The condensate and feedwater system supplies water to the reactor via the feedwater spargers, which are located in the vessel annulus above the jet pumps. If the pipe break which initiated the accident is in the recirculation outlet (i.e., recirculation pump suction) lines, the annulus will be drained, and much of the water sprayed in via the feedwater sparger will miss the jet pump inlets and go out the break. (Conversely, if the pipe break is in the recirculation pump discharge pipes, recirculation inlet lines or semicircular manifolds, the injected water will be much more effective.)

Thus, the condensate and feedwater system has the advantage of already being running when the pipe break occurs, and also will not need operator intervention, but may not be very effective and will certainly not be effective at high flow rates for very long. (Interestingly, the Peach Bottom PRA[1081] gave some credit for feedwater, but the Grand Gulf PRA[1081] did not.) If the LOCA is combined with a LOOP, this system will not be available at all. The only effect of this system is to stave off core melt in the short term.

For longer term coolant supply, a significant means of supplying water is the standby coolant supply system. Details of this system can vary from plant to plant, but every BWR has some means of lining up valves to supply raw water directly to the reactor core. This is commonly done by providing a cross-tie between service water and the RHR piping. However, this system must be lined up manually, and the reactor must be down to about 50 psig. Thus, the standby coolant supply is primarily a long term cooling system, and will not be available during the first minutes after the break, when there is great turmoil in the suppression chamber. For this system, the Peach Bottom PRA[1081] estimated a failure probability of about 25%.

Thus, using both main feedwater and the standby coolant supply, it may be possible to mitigate a large-break LOCA in those situations where offsite power remains available, and this possibility should be considered as part of any full technical assessment of this issue. However, for screening purposes, no credit will be given for this strategy.

The only other systems available for long term coolant supply include the condensate system using makeup to the hotwell from the condensate storage tank, and the control rod drive pumps, which take suction from the condensate storage tank. These are low capacity systems, effective only after many hours have elapsed and decay heat is low, and are not expected to be effective in the time frame envisioned in the scenario of this issue. Thus, no credit will be given for these systems.

Discussion

For the BWR/3 and GE designs after, BWRs are equipped with an ECCS which is both redundant and diverse. In most BWR PRAs, LOCA-initiated sequences generally are not principal contributors in the overall safety profile of the plant. This issue postulated a failure mechanism which, if it is indeed true, has the potential to defeat the entire low pressure ECCS and post-accident containment cooling as well.

Overall, the safety significance is dominated by the fast sequencing scenario and is a concern for the largest-break LOCA. The spaced-out pump startups in the slow sequencing scenario significantly reduces the air entrainment effect on safety postulated in the issue. The analysis indicated some importance even for the base case, but rises significantly for a BWR with fast sequencing when offsite power is available, and also for a BWR in a high seismic area. However, the various estimates given above include some conservatism, and should be understood as an

importance measure, not as a best estimate. That is, if the postulated mechanism is true, these are estimates of what the safety significance would be.

It is suggested that any technical assessment include some effort to address the various points of conservatism within this analysis:

(1) This analysis assumed that non-condensible gas bubbles are uniformly mixed within the suppression pool. The actual situation, including stratification and how deeply bubbles will be driven into the pool, should be investigated.

(2) The number of plants with fast sequencing should be investigated along with the number in high seismic zones.

(3) The efficacy of ring headers and other pump suction piping configurations in isolating the pumps from suppression pool phenomena should be investigated.

(4) The ability of pumps to withstand entrained air, particularly for short periods of time, should be investigated.

CONCLUSION

Based on the LERF estimates given above, work on the issue continued to the technical assessment stage.[1824]

REFERENCES

16. WASH-1400 (NUREG-75/014), "Reactor Safety Study, An Assessment of Accident Risks in U.S. Commercial Nuclear Power Plants," U.S. Atomic Energy Commission, October 1975.

702. NUREG-0661, "Mark I Containment Long Term Program Safety Evaluation Report, Resolution of Generic Technical Activity A-7," U.S. Nuclear Regulatory Commission, July 1980, (Supplement 1) August 1982.

1081. NUREG-1150, "Severe Accident Risks: An Assessment for Five U.S. Nuclear Power Plants," U.S. Nuclear Regulatory Commission, (Vol. 1) December 1990, (Vol. 2) December 1990, (Vol. 3) January 1991.

1318. NUREG/CR-4550, "Analysis of Core Damage Frequency from Internal Events," U.S. Nuclear Regulatory Commission, (Vol. 1, Rev. 1) January 1990, (Vol. 2) April 1989, (Vol. 3, Rev. 1) April 1990, (Vol. 4, Rev. 1) August 1989, (Vol. 5, Rev. 1) April 1990, (Vol. 6) April 1987, (Vol. 7, Rev. 1) May 1990.

1760. NUREG/CR-5750, "Rates of Initiating Events at U.S. Nuclear Power Plants: 1987-1995," U.S. Nuclear Regulatory Commission, February 1999.

1814. Memorandum to S. Newberry from J. Grobe, "Potentially Generic Safety Issue - BWR ECCS Suction Concerns," May 10, 2002.

1815. Memorandum to F. Eltawila from S. Newberry, "Potentially Generic Safety Issue - BWR ECCS Suction Concerns," May 28, 2002.

1816. NRC Bulletin 96-03, "Potential Plugging of Emergency Core Cooling Suction Strainers by Debris in Boiling-Water Reactors," May 6, 1996.

1817. AEOD-E218, "Potential for Air Binding or Degraded Performance of BWR RHR System Pumps During the Recirculation Phase of a LOCA," U.S. Nuclear Regulatory Commission, March 31, 1982.

1818. NEDE-24539-P, "Mark I Containment Program: Full Scale Test Program Final Report," General Electric Company, April 1979.

1819. Memorandum to J. Dyer from S. Reynolds, "Ad Hoc Review Panel Recommendation Regarding a Differing Professional View on BWR ECCS Suction Concerns," April 8, 2002.

1820. CEN 420-P, Volume 1, "Small Break LOCA Realistic Evaluation Model: Calculational Models," October 1993.

1821. NUREG/CR-2792, "An Assessment of Residual Heat Removal and Containment Spray Pump Performance Under Air and Debris Ingesting Conditions," U.S. Nuclear Regulatory Commission, September 1982.

1824. Memorandum to A. Thadani from F. Eltawila, "Results of Initial Screening of Generic Safety Issue 193, 'BWR ECCS Suction Concerns,'" October 16, 2003.

ISSUE 194: IMPLICATIONS OF UPDATED PROBABILISTIC SEISMIC HAZARD ESTIMATES

DESCRIPTION

Historical Background

Beginning in the early-1980s, the NRC sponsored the development of a Probabilistic Seismic Hazard Analysis (PSHA) methodology by LLNL. For the purpose of conducting a systematic evaluation of the licensing criteria for older plants, a limited study of the seismic hazard at the sites where these plants are located was conducted in 1982 and documented in NUREG/CR-1582.[1834] In a 1982 letter, the USGS suggested that deterministic and probabilistic evaluations of seismic hazard should be made for the Eastern United States (EUS) to assess the likelihood of large earthquakes along the eastern seaboard. This led to the 1989 publication of the PSHA study of all 69 sites in the Central and Eastern United States (CEUS) by LLNL in NUREG/CR-5250.[1835] In conjunction with funding the LLNL study, NRC also recommended that the nuclear power industry conduct an independent study to present a coordinated utility position on PSHA estimates. The industry study of 56 CEUS sites was conducted by EPRI and the results were published in EPRI-NP-4726 in 1986.

A draft report on the trial implementation of the Senior Seismic Hazard Analysis Committee (SSHAC) guidance[1838] for the probabilistic seismic hazard assessment of the Watts Bar and Vogtle[1839] nuclear plants showed a higher probabilistic seismic hazard estimate for the Watts Bar site than the value obtained from NUREG-1488.[1836] The increase in the seismic hazard estimate was investigated in a follow-on study which identified the root causes to be a combination of characteristics of the Watts Bar site, such as the site-specific source zones characterization, and more generic ones, such as the modified ground motion model. Depending on whether new information becomes available, other sites could have similar conclusions, such as in the case of Vogtle, for which the mean estimates of the seismic hazard slightly decreased between the 1993 EUS and the 1998 Trial Implementation Plan (TIP) studies. This represented a new interpretation of new seismicity data and resulted in the identification of this issue.[1837]

Safety Significance

The safety concerns were: (1) Did the new data warrant concerns regarding the seismic design bases for nuclear power plants in the region around the Eastern Tennessee Seismic Zone (ETSZ)? and (2) Were other nuclear power plants in the region adversely affected?

ANALYSIS

Frequency Estimate

Large differences in the seismic hazard results between those from the LLNL study and the EPRI study led to the examination of the conflicting results. The staff decided to supplement the LLNL study by improving the elicitation of data and its associated uncertainty from the experts to better capture the uncertainty in our knowledge. The results of this study were published in NUREG-1488.[1836]

Although the PSHA results in NUREG-1488[1836] show that there is reasonable agreement on plant-specific SSEs, the LLNL seismic hazard estimates in the 10^{-4} to 10^{-6} range are systematically higher than the EPRI hazard results for this range. This is the range of seismic hazard that typically has the most influence on the contribution to seismic risk for nuclear power plants. In an attempt to better understand the reasons for the differences in the two methods, the SSHAC was established under the sponsorship of NRC, EPRI, and DOE in early-1993. The SSHAC report[1838] was published in April 1997 and stated: "Originally, some of the sponsors and participants proposed that one key objective should be to 'resolve' the differences between the LLNL and EPRI studies. However, the Committee quickly realized that the new project would be most useful if it were forward-looking rather than backward-looking - specifically, if it could pull together what is known about PSHA in order to recommend an improved methodology, rather than specifically attempting to figure out which of the two studies was 'correct,' or which specific problems with either study were most important in affecting the study's specific results."

In order to apply the SSHAC methodology, LLNL was contracted to perform a study[1839] (the TIP) of two trial sites (Watts Bar and Vogtle) in the Southeastern United States, a draft of which was completed in 1998. The TIP results for the Watts Bar site indicated that, at the mean annual frequency of 10^{-4}, the peak ground acceleration (PGA) value is about 0.45g, compared to a PGA of about 0.28g at the same mean annual frequency of 10^{-4} from NUREG-1488.[1836] In order to investigate the reasons for the difference in the results from the TIP and the earlier LLNL study, another study was conducted and documented in the draft report UCRL-ID 142039, "Comparison of the PSHA Results of the 1993-EUS-Update and the 1998-TIP Studies for Watts Bar," in March 2002. The introduction of the ETSZ, and to a lesser extent the change in the ground motion attenuation model, increased the potential for higher seismic hazard at sites in the proximity of the ETSZ. A comparison of the TIP and NUREG-1488[1836] hazard curves for the PGA values is shown in Figure 3.194-1 below.

At the reference annual frequency of 10^{-4}, the TIP results are about 1.6 times higher than the 1993 EUS-Update estimate. Sites with operating plants in the proximity of the ETSZ are Browns Ferry, Sequoyah, and Watts Bar. Based on the results for the Watts Bar site, there is a potential that the ETSZ could influence the seismic hazard at these other sites as well. The effect of changes in ground motion model, although secondary in nature, can increase the response spectrum shape in the high frequency range from 9 Hz to 50 Hz. A recent study[1840] also showed the increase of spectral ordinates in the high frequency end. Seismic input in the high frequency end of the response spectrum can cause relay chatter and other effects to vibration-sensitive components. The USGS seismic hazard maps for the Eastern Tennessee area also indicated a higher seismic hazard.

The assessment of seismic risk using seismic PRA models starts with a seismic hazard curve (e.g., frequency of exceedence versus PGA), as described above. Then, fragility curves (conditional frequency of failure versus PGA) for each structure, system, and component of interest must be derived. Finally, the fragility curves are convolved with the seismic hazard curve using event tree and/or fault tree logic models to calculate the frequency of various end states (e.g., CDF) - a fairly involved numerical integration. This calculation can be rather formidable - much more so than the usual internal events PRA, since a seismic event can both initiate an accident and also serve as a common mode failure mechanism for many components, structures, and systems in the plant.

If the change in the seismic hazard curve were a constant multiplicative factor, constant over the domain of the curve, the resulting change in seismic CDF would also be a simple multiplicative factor, since the proportional change would carry through the entire calculation. However, the TIP

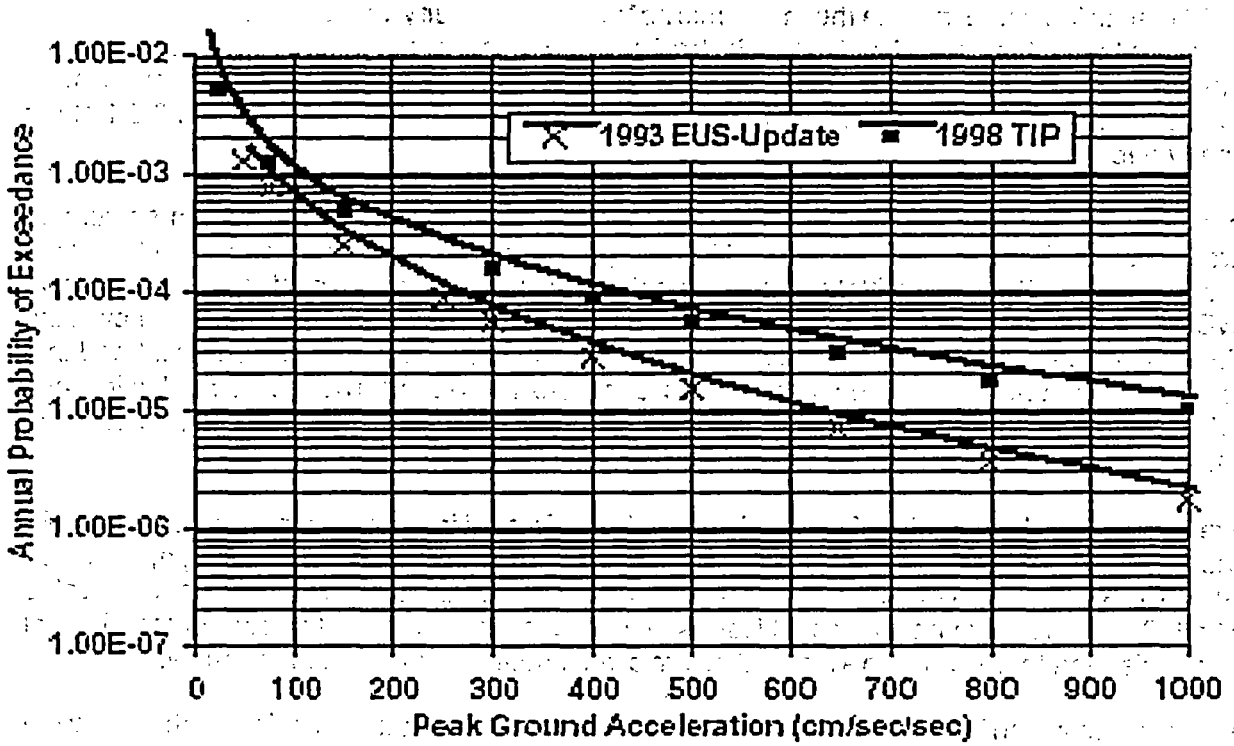

Comparison of the Mean Seismic Hazard Estimates for the Watts Bar Site
Figure 3.194-1

curve does not differ from the original curve by a constant factor. This does not change the Boolean logic of a PRA, but does change the numerical integrations. Another complication is that many plants do not have a seismic PRA, but rather as part of their IPEEE, many licensees performed a seismic margins analysis (SMA). This results in no quantification of the seismic risk at these plants, though it does provide a determination that there are safe shutdown paths that meet a required review level earthquake (RLE) and also identifies any potential vulnerabilities associated with those paths. For these plants, the IPEEE typically does identify an overall plant high confidence of a low probability of failure (HCLPF) value, though this value may take credit for plant modifications to resolve the identified vulnerabilities, anomalies, outliers, etc.

Fortunately, an August 1999 paper by Robert P. Kennedy (*"Overview of Methods for Seismic PRA and Margin Analysis Including Recent Innovations,"* Proceedings of the OECD-NEA Workshop on Seismic Risk, Tokyo, Japan,) presented an approximate method of estimating seismic risk using the plant HCLPF value. This method assumed that the seismic hazard curve can be approximated by an exponential curve and that the fragility curves can be approximated as being log-normally distributed. Both assumptions are reasonable approximations for the purposes of the screening of this issue. Using these assumptions, this method develops a closed form solution for the seismic risk which was developed for use in sensitivity studies such as this. This method was used to develop a sense of the change in the risk estimates, based on the different seismic hazard curves (i.e., LLNL 1993 vs. TIP 1998) for the Watts Bar site. As a caution, these are simplistic calculations that give a rough estimate of the seismic CDF. However, a reasonable estimate of the expected change in CDF resulting from the change to the latest seismic hazard estimate can be obtained by applying the same approach to both sets of seismic hazard information.

The TIP results indicated that the mean seismic hazard estimate for Watts Bar was about two times greater than that estimated in NUREG-1488.[1836] To compare the impact of this new seismic hazard information on CDF for Watts Bar, a simple calculation was carried out using the approximate method described above. The specific steps of the approach are identified in Section 6.2.1 of the Kennedy paper.

This calculation addressed only the seismic contribution. It did not address random equipment failures/unavailabilities or operator errors. However, it was noted from the NRC contractor's TER on the Watts Bar IPEEE submittal that "... non-seismic failures are not expected to be significant for WBN [Watts Bar Nuclear] because there seems to be sufficient diversity and redundancy in the equipment selected in the SSEL [safe shutdown equipment list] for the success paths ..." and that "... significant human action problems are not expected for WBN." Therefore, neglecting any contribution to the CDF from simultaneous random equipment failure or adverse human action in this simple calculation should not lead to erroneous results.

The results of the Watts Bar IPEEE seismic analysis, performed in accordance with the EPRI SMA methodology as described in EPRI-NP-6041-SL, "Nuclear Power Plant Seismic Margin," Revision 1, August 1991, indicated that the plant HCLPF value exceeded the review level earthquake value of 0.3g PGA. There were no significant issues identified in the staff's SER or contractor's TER of this analysis, and there were no identified seismic vulnerabilities, anomalies, or outliers.

The simple calculation included some assumptions regarding the plant's seismic capability and the logarithmic standard deviation of 0.4 that was recommended in the Kennedy paper was used. A lower logarithmic standard deviation would result in higher calculated CDF and change in CDF values. In addition, Watts Bar had identified two success paths that both exceed a HCLPF value of 0.3g PGA. Using the HCLPF Max/Min method rules, the plant HCLPF is equal to the greater of the HCLPF values for these two success paths. However, it was not clear from the SER or TER what precise HCLPF values were achieved for each success path; only that they both exceeded 0.3g PGA. Therefore, in this analysis both success paths were assumed to only just meet the 0.3g PGA and, thus, this capacity was also used to represent the plant HCLPF in the analysis. If a higher HCLPF value were used, lower CDF and change in CDF values would be calculated. With the plant HCLPF of 0.3g PGA and assuming the logarithmic standard deviation of 0.4, the simplistic approach was used to estimate the risk associated with seismic events for the different seismic hazard information.

Using this method and the LLNL seismic hazard information documented in NUREG-1488,[1836] the Watts Bar seismic CDF was estimated to be about 10^{-5}/RY. Using this approach and the new seismic hazard information from TIP, the Watts Bar seismic CDF estimate increases to about 4 x 10^{-5}/RY. This approach implicitly assumed no change in the spectrum shape from the IPEEE study. But the TIP uniform hazard spectrum, which is based on a 10^{-4} mean PGA value, has higher spectral acceleration values than the design SSE spectral acceleration values above about 7 Hz and the increase peaks at about 25 Hz. However, in the 1 to 7 Hz range, the spectral acceleration values are significantly below those from the SSE spectrum. In order to account for the effect of this difference in spectrum shape on the CDF, the Watts Bar plant HCLPF value (0.3g) was scaled to the spectral acceleration values at 5 and 10 Hz, and the scaling relationships for 5 and 10 Hz spectral ordinate from the TIP uniform hazard spectrum were used to determine the CDF values at 5 and 10 Hz. The resulting average CDF was 1.8 x 10^{-5}/year. Therefore, accounting for the TIP uniform hazard spectrum shape, there was an increase in CDF of about 0.8 x 10^{-5}/year.

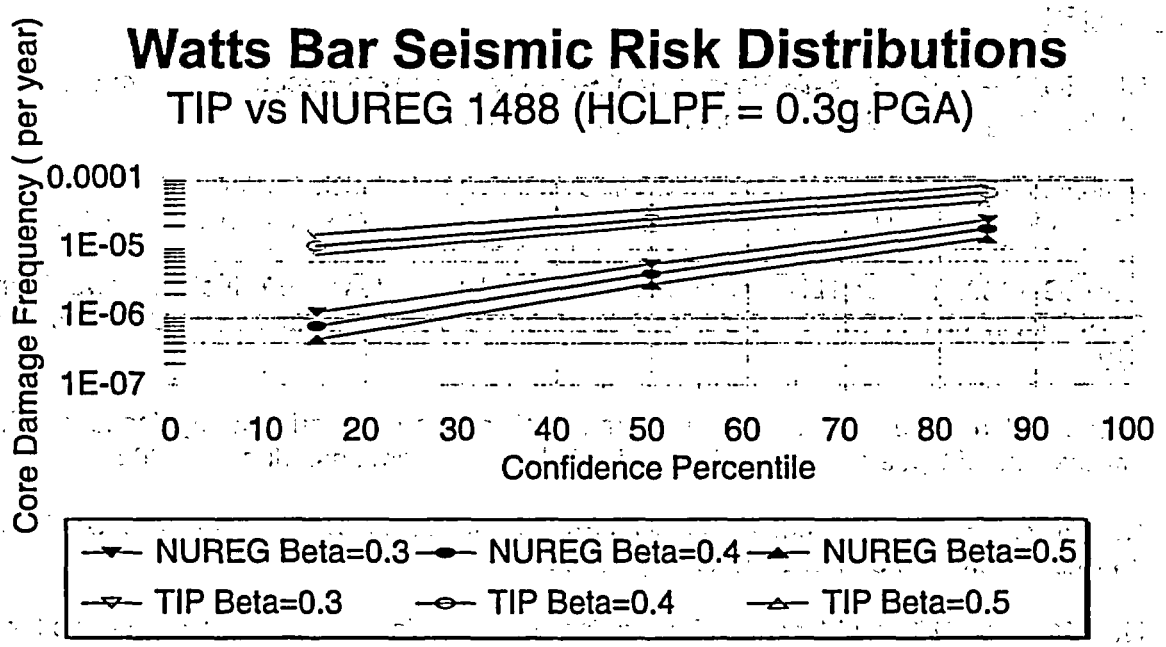

Figure 3.194-2

In order to determine the sensitivity of the estimated CDF for the Watts Bar site using the TIP seismic hazard curve, several CDF estimates were made using the mean, 15th, and 85th percentile hazards, with varying uncertainties (beta values). From Figure 3.194-2, it is apparent that the CDF values are not very sensitive to the percentile level of the hazard curve. This is because the HCLPF value is high and at the low end of the annual frequency of occurrence.

Other Considerations

This issue specifically addressed plants in the ETSZ. However, at the time of this analysis in 2003, the USGS had undertaken a nationwide effort of seismic hazard mapping under the National Earthquake Hazard Reduction Act. In early-2003, the USGS issued revised hazard maps using a methodology quite similar to the SHAAC approach and the NRC was conducting a study of the USGS methodology as a part of the 10-year seismic data base updating activity. This project was expected to lead to an assessment of seismic hazard at existing plant sites. At the end of the NRC study, a comprehensive perspective of the increase or decrease of plant seismic hazard and its effects on the SSE ground motion at all the EUS plants was expected to be available.

CONCLUSION

Based on the risk estimates associated with the spectrum shape for the Watts Bar site and Figure C5 of Management Directive 6.4, the issue regarding the adequacy of deterministic seismic design criteria for the licensing basis of plants in the ETSZ was excluded from further consideration. A generic study may be required to assess the significance for other plants, if the revised USGS results confirm the TIP results and show increases in the seismic hazard for more sites.[1841]

REFERENCES

1834. NUREG/CR-1582, "Seismic Hazard Analysis - Overview and Executive Summary," U.S. Nuclear Regulatory Commission, (Vol. 1) April, 1983.

1835. NUREG/CR-5250, "Seismic Hazard Characterization of 69 Nuclear Plant Sites East of the Rocky Mountains," U.S. Nuclear Regulatory Commission, (Vols. 1 to 8) January 1989.

1836. NUREG-1488, "Revised Livermore Seismic Hazard Estimates for 69 Nuclear Power Plant Sites East of the Rocky Mountains," U.S. Nuclear Regulatory Commission, (Draft) October 1993.

1837. Memorandum to J. Flack from D. Dorman, "Proposed Generic Safety Issue on the Implications of Updated Probabilistic Seismic Hazard Estimates," June 6, 2002.

1838. NUREG/CR-6372, "Recommendations for Probabilistic Seismic Hazard Analysis: Guidance on Uncertainty and Use of Experts," April, 1997.

1839. NUREG/CR-6607, "Guidance for Performing Probabilistic Seismic Hazard Analysis for a Nuclear Plant Site: Example Application to the Southeastern United States," August 18, 1998.

1840. NUREG/CR-6281, "Technical Basis for Revision of Regulatory Guidance on Design Ground Motions: Hazard and Risk-consistent Ground Motion Spectra Guidelines," October 2001.

1841. Memorandum to A. Thadani from N. Chokshi, "Results of Initial Screening of Generic Issue 194, 'Implications of Updated Probabilistic Seismic Hazard Estimates,'" September 12, 2003.

ISSUE 195: HYDROGEN COMBUSTION IN BWR PIPING

DESCRIPTION

Historical Background

The issue of potential hazards from combustible gases was raised[1822] after two events involving hydrogen combustion occurred within 2 months in late-2001 at two foreign BWRs. Both these events involved sudden rupture of the pipe segments of the RCS by detonation of radiolytic hydrogen. The first event occurred on November 7, 2001, at Hamaoka Unit 1 (BWR-4) and involved rupture of the RHR steam condensing line during a routine surveillance testing of the HPCI system. In the second event on December 14, 2001, at Brunsbüttel, a segment of the head spray line was destroyed. The two reactors were designed by NSSS vendors other than GE. Both these events were reportedly caused by ignition of combustible H_2-O_2 mixture generated by radiolysis of steam/water.

In the past 2 decades, additional events involving hydrogen combustion have occurred at other foreign BWRs. Furthermore, there have been relevant events at foreign non-LWRs. Some of these events also involved personnel injury.

A few hydrogen combustion events associated with the primary reactor coolant system have also been reported at US LWRs; however, there were no significant consequences because of the plant conditions and/or timely counteractions. Some events at US reactors ranged from small hydrogen fires, with no personnel injury, to spillage of primary reactor coolant. In a handful of events, personnel escaped without significant injury and/or contamination. For instance, an event at a US PWR involved hydrogen ignition in the high pressure injection line on the cold leg of the RCS due to welding activities in the vicinity. The plant licensee promptly reported this occurrence to another plant licensee where similar piping weld repairs were being performed, thus preventing a similar occurrence. In another event, personnel error caused hydrogen seepage into a plant's air system while the plant was in a refueling outage. This condition persisted for a couple of hours before the plant personnel realized their error.

Over the years, several fires involving generator hydrogen and the hydrogen storage systems have been reported at US and foreign reactors. In the early 1990s, the NRC had reviewed such events while studying GSI-106, "Piping and the Use of Highly Combustible Gases in Vital Areas." The scope of GSI-106 included evaluation of risk from: (1) the storage and distribution of hydrogen for the volume control tank (VCT) in the PWRs and the main electric generator in the BWRs and the PWRs; (2) other sources of hydrogen such as battery rooms, the waste gas system in PWRs and the Off-gas system in BWRs; and (3) small portable bottles of combustible gases used in maintenance, testing, and calibration. The risk from large storage facilities outside the reactor, auxiliary, and turbine buildings was addressed separately and was not within the scope of GSI-106. In the evaluation of GSI-195, it was presumed that, since the VCT and the generator are not located near the reactor and primary coolant system piping, the risk from hydrogen fires or explosions would not lead to pipe breaks resulting in the LOCAs, ATWS, and steam generator tube ruptures. Additionally, that scoping analysis did not consider the effect of hydrogen explosions on barrier walls and penetrations, such as doors between the turbine building and the adjoining reactor, control, and auxiliary buildings for the two BWR-3 and four BWR-4 considered therein.

On October 25, 1993, the NRC issued Generic Letter 93-06[1547] to inform US licensees of the technical findings from the NRC's resolution of GSI-106, with the expectation that the recipients would review the information for applicability to their facilities and consider actions.

An exhaustive review of foreign and US reactor operational experience review revealed a number of significant events as precursors with potential consequences on plant safety. These events affected both BWRs and PWRs.

The regulators of the two countries where the 2001 hydrogen explosion events occurred released reports which apprised other regulators of their event investigation, analyses, and lessons learned. Follow-up actions taken by the foreign regulatory agencies, the NRC, and the industry are summarized below.

NRC Generic Communications: After the two most recent foreign events, the NRC issued two Information Notices[1823] to inform the US licensees of the events and the associated safety concerns. Prior to this, the NRC had issued IE Bulletin No. 78-03[121] and Information Notice No. 89-44[1552] on the potential hazards of combustible gases. The issue of air/steam/gas-binding of pumps in safety systems has been examined in detail by the NRC and documented in the following AEOD reports: C404[637]; E218[1817]; E325[636]; E910[1830]; T515[1831]; and T927[1832]. Via the NRC communications, US licensees were notified of the potential hazards of entrapped gases in safety system piping and other components. The licensees were cautioned against accumulation of combustible gases to explosive levels, and were advised that should there be a possibility of the presence of a combustible mixture to take the necessary precautions to prevent hydrogen ignition, especially when conducting maintenance activities. Some of the US events and/or generic safety studies were also the subjects of the Nuclear Energy Agency/International Atomic Energy Agency Incident Reporting System (IRS) to share the safety concerns and potential risk with the worldwide nuclear community (e.g., IRS 0001023).

GE Nuclear Energy (GE-NE) Initiatives: On November 20, 2001, GE-NE issued Rapid Information Communication Service Information Letter (RICSIL) No. 85, "HPCI/RHR Steam Supply Line Rupture," to advise the GE BWR owners of the Hamaoka-1 event. This RICSIL contained a brief event description and the information publicly available at the time. It identified the piping systems susceptible to accumulation of non-condensible gases and recommended necessary actions. The RICSIL indicated that, in April 2002, the Hamaoka plants staff had established the cause of the pipe rupture as a result of the accumulation and ensuing detonation of radiolytic gases. This communique briefly discussed similarities between the two events and, based on its assessments of the available information, agreed with the parent utilities' determination of the root cause of the events being hydrogen explosion, as also confirmed by the estimates of the energy releases associated with the event that detonation of a stoichiometric mixture is the most plausible cause. On June 14, 2002, GE-NE issued Services Information Letter No. 643, "Potential for Radiolytic Gas Detonation." In addition to Hamaoka, this SIL advised the GE BWR and ABWR owners about the December 2001 event at Brunsbüttel.

A GE Pipe Rupture Task Force evaluated the two foreign events and concluded that probability of similar events in GE BWRs, while small, cannot be completely precluded. No plant design deficiencies were identified. GE-NE recommended that the GE BWR and ABWR owners consider the following: (1) review piping systems to identify any potential vulnerabilities for accumulation of radiolytic gases; (2) assess detonation potential of vulnerable piping; (3) consider design or system operation modification(s); and consider the potential for accumulation and detonation of radiolytic gases.

The Task Force concluded that there are no design deficiencies in the GE BWRs or ABWRs. GE-NE identified the susceptible piping configurations as those which: (1) are stagnant during normal plant operation; (2) are not continuously or periodically vented or purged; (3) are connected to the steam-filled areas of the NSSS; (4) are lines isolated from higher pressure systems by a potentially leaky valve; (5) can allow accumulation of non-condensible gases; and (6) have continuous steam condensation and drainage. For the combustible gases to detonate, the hydrogen content has to be greater than 15 v/o, with fluid temperature greater than 500° F.

GE-NE also evaluated consequences of potential hydrogen fires and subsequent pipe ruptures. In June 2002, it presented its findings to the staff. GE had estimated that the detonation over-pressure (i.e., the pressure developed during detonation) is dependent on the piping geometry, and from1000 psi can increase locally by a factor of 17 to170. GE also performed a risk assessment by considering H_2-O_2 detonation as the initiator of a small- to medium-break LOCA, and concluded that the incremental CDF for the GE BWRs is 10^{-6}, the base CDF being 2×10^{-5}.

BWR Owners' Group (BWROG) Initiatives: In 2002, the BWROG formed the Hydrogen Accumulation Committee to provide detailed guidance to BWR utilities for identification, disposition, and mitigation of potential radiolytic H_2-O_2 accumulation in plant piping and equipment. In November 2002, the BWROG provided the Committee's guidance document, "BWR Piping and Component Susceptibility to Hydrogen Detonation," (GE-NE-0000-0007-4008-01, Revision 0, Class I) to US utilities and the NRC. This communication indicated that one risk-significant characteristic – the presence of RHR steam condensing mode valves and piping – was not present at many US BWRs, and many had eliminated that feature. RHR steam isolation valve leakage either had not been a problem or had been corrected or mitigated. The Hydrogen Accumulation Committee sought input from GE and the foreign utilities, and provided detailed guidance to the BWR utilities for identification, disposition, and mitigation of potential radiolytic H_2-O_2 in plant piping and equipment. The BWROG surveyed the US utilities for the vulnerabilities, including those similar to the two foreign BWRs, and issued an interim status report on the licensees' responses.[1829] The Committee identified the significant plant equipment that was vulnerable to H_2-O_2 accumulation; surveyed its members to identify the plant areas with the greatest potential for H_2-O_2 accumulation, and actions taken to address this configuration; reviewed the recommendations in Generic Letter 91-18[1828] (including Revision 1) to ensure that operability with respect to hydrogen accumulations is properly addressed; and developed the guidance document (GE-NE-0000-0007-4008-01, Revision 0, Class I) for identifying equipment subject to hydrogen accumulation and potential rupture, as well as short- and long-term mitigation strategies. This guidance was endorsed by BWROG members.

The conclusions based on evaluation of hydrogen build-up rates and survivability of components and piping, as documented in GE-NE-0000-0007-4008-01, were as follows:

(1) when non-condensibles accumulate, the pipe temperature decreases to the saturation temperature of the steam partial pressure, which decreases with time;

(2) larger diameter pipes take longer for radiolytic gases to accumulate;

(3) condensate pots with piping configurations that result in temperature below 467°F need further analysis;

(3) carbon steel piping and higher operating temperatures and pressures are more susceptible than stainless steel piping or lower operating temperature and pressures; and

(4) larger diameter piping will generally fail from detonation when operating near reactor temperature pressure and temperature.

Subsequently, the BWROG conducted a survey of all the utilities regarding the action taken at each of the operating 34 BWRs to address the hydrogen accumulation and potential pipe rupture situations. On August 4, 2003, the BWROG forwarded the survey results to the NRC highlighting the following findings: (1) all had reviewed the available literature; (2) half had evaluated the susceptible piping; (3) some had completed and others were continuing risk assessment of plant equipment; (4) less than half the plants had performed physical walk-downs; (5) 20% had reviewed the plant drawings; and (6) half had identified potentially vulnerable equipment and are pursuing solutions to address them.

Safety Significance

Under some circumstances, an hydrogen explosion in the primary system piping and equipment could lead to an "unisolatable" LOCA. The effect on BWR plant safety of a hydrogen detonation, such as those discussed above, is to either cause a pipe break or damage an SRV. In either case, the effect is to cause a loss of coolant from the primary system, but the mechanistic effects are somewhat different, and the two effects will be treated separately. Additionally, there have been some instances of personnel injury and fatalities stemming from hydrogen explosions. These, however, have not posed significant risk to the public, but instead are of significance for occupational safety and health.

Regarding detonations which rupture pipes, all of the events which have happened thus far have been in locations where the break was isolated, thus limiting the loss of coolant inventory. However, a break in a location which cannot be isolated, or a failure to isolate, would result in a LOCA.

Based on the actual events, such a loss of coolant accident is not likely to be a large design-basis LOCA, since the stagnant "dead end" locations where the combustible gases can accumulate are not large pipes. However, it is quite conceivable that such a detonation-induced pipe break could result in an intermediate-break "S1" LOCA. In reality, of course, a smaller break would be expected to be more likely than a larger break, but for generic issue screening purposes, it will be assumed that a detonation-induced pipe break, if not isolated, will result in an intermediate-break LOCA.

Regarding detonations which occur in SRVs, the effect has been to damage the valve such that the valve opens and remains open, blowing down the primary system into the suppression pool. (In addition to the SRVs in the main steam system, there are safety or relief valves in the liquid-filled systems, such as LPCI and LPCS as well. Failure of these valves may also have potential for coolant loss. However, these valves are separated from the primary system by isolation valves, and failures of these valves will be included as part of the pipe burst accident sequences.) The inadvertent opening of an SRV (IORV) is normally treated as an anticipated transient, since this is not a rare event.

ANALYSIS

Frequency Estimate

The history of these hydrogen detonations suggest two slightly different initiating events. The first is a detonation which causes a pipe to burst. If the resulting leak is not isolated, this will cause a LOCA, as described above. The second initiating event is a detonation within an SRV or its associated inlet piping, which causes the valve to jam open. The resulting loss of coolant will not be isolatable. Initiating event frequencies will be estimated for both of these events.

Pipe Breaks: The severity of combustible gas detonations is likely to vary widely, from mild "pops" to events sufficiently violent to cause damage. The milder events may well not be detected, or may be attributed to other possible causes such as loose parts or water hammer. Thus, the frequency of detonations is difficult to estimate. However, the frequency of those events sufficiently severe to cause pipes to burst can be estimated more directly, since these events are not likely to be missed. Thus, the frequency of a detonation-induced pipe break can be estimated directly from the actual experience.

Based on a private communication with the IAEA, the overall BWR operating experience (as of mid-2003), foreign plus domestic, was 27,900 reactor-months, or 2,325 BWR-years. The event descriptions in the various databases were sometimes somewhat ambiguous, but there were two events which definitely caused pipes to burst, plus one more that may have done so. It will be assumed that three "pipe burst" events had taken place in 2325 RY, so the frequency of detonation-induced pipe breaks will be assumed to be approximately 1.3×10^{-3} event/RY. (This estimate was given to two significant figures only to aid in following the calculations. It was not intended to imply that the frequency is known to such accuracy, as will be shown below.)

For an uncertainty estimate, standard "counting" statistics will be used. The standard deviation of such an estimate is just the square root of the number of events, or 1.7 in 2325 RY.

SRV Failures: Again, there is some ambiguity in the event descriptions, but there was definitely one event where a detonation apparently caused an SRV to fail open and cause a system blowdown. There was a second event where a detonation appeared to have caused an SRV to fail open, plus at least one more event where a detonation apparently caused a blowdown in conjunction with ADS testing. Thus, it was assumed that three events have taken place. Such an event results directly in an intermediate-break "S1" LOCA, as described above. Again, three events in 2325 RY implied an initiating event frequency of 1.3×10^{-3} event/RY. However, because of the ambiguity in the number of events, a standard deviation of 2.7 was used this time to account for both the statistical uncertainty and the uncertainty in the number of events.

Failure to Isolate: The likelihood of the coolant leak not being isolated, either because of a location which has no isolation valve, or because of damage to or failure to close an isolation valve, is more problematic. In all of the known events, the leak was isolated. (This does not apply to the SRV failures.)

The isolation valves in question are generally check valves or motor-operated gate valves, and there are usually two in every fluid-carrying line that penetrates the primary system. Normally, the likelihood of isolation failure would be quite low. However, an examination of piping and instrumentation diagrams for some plants has shown that some locations do exist where a break could not be isolated, e.g., lengths of pipe on the primary system side of isolation valves. Moreover,

there is also some possibility that the detonation itself could damage the isolation valves. Thus, it is known that this likelihood is not zero.

The fact that a number of events have happened with no instances of non-isolation, does allow some inferences to be drawn. Obviously, as the number of events with successful isolation goes up, the more confidence there is that the fraction of non-isolatable events is small. This can actually be quantified. For a confidence interval of 95%, if the number of events is n, and the fraction of events where isolation is not possible is x, then

$$x \leq 1 - \sqrt[n]{0.05}$$

That is, for n events with successful isolation, to 95% confidence, the likelihood of non-isolation is less than the limit given by this equation. For three pipe burst events, this works out to an upper limit of about 63%.

This is, of course, just an estimate of a high percentile, not an estimate of the actual likelihood of non-isolation. Given that all events were in isolatable locations, the data would give a "best" estimate of zero for this likelihood. However, an examination of some plant drawings has shown that there are locations where there is either no isolation valve or both isolation valves are normally left open or have leaked. Thus, from engineering knowledge, it is known that this likelihood is greater than zero.

Given the lack of any further information, it will be assumed that the likelihood of non-isolation is described by an exponential distribution. The equation for this distribution is:

$$f(x) = \lambda e^{-\lambda x}$$

The standard deviation λ will be chosen such that the integral of this distribution from zero to x = 0.63 is equal to 95%:

$$\int_0^x f(x)dx = \int_0^x \lambda e^{-\lambda x} dx = 0.95$$

A value of λ = 4.76 will set this integral equal to the desired 95% at x = 0.63, to match the 95th percentile point estimated from the data. This is, of course, a great deal of mathematical inference to be based on a rather meager three data points, and a "sanity check" is very much in order. For an exponential distribution such as this, the mean is just the reciprocal of the parameter λ:

$$\mu = \frac{1}{\lambda} = 0.21$$

Thus, the distribution has a maximum value at zero (i.e., zero non-isolatable piping), a mean of 21%, and a tail such that the 95th percentile is reached at a fraction of non-isolatable piping of 63%. This is, of course, an educated guess, not a rigorous inference from experimental data. These numbers will be used because, after an examination of some piping diagrams, they appear reasonable, particularly the 21% mean fraction of piping that is not isolatable. (The numbers are

given to two significant figures for the benefit of those who wish to follow the calculation, and are not intended to imply any degree of accuracy.)

Core Damage Frequency: To estimate the core damage frequency associated with pipe breaks associated with these hydrogen detonations, the NUREG-1150[1081] PRA for the Peach Bottom plant was chosen, primarily because of its availability in the SAPHIRE code package. Two separate calculations were done, one for the SRV blowdown and one for a burst pipe that is not isolatable.

SRV Blowdown: The uncontrolled blowdown of the primary system through an SRV that has failed open is an anticipated transient, and has resulted from causes other than a hydrogen detonation. In terms of a standard probabilistic risk analysis, this scenario affects the safety profile of the plant in three different ways. First, as is the case for any transient, there is always some probability of severe core damage if enough systems fail. Second, an SRV blowdown is an intermediate-break LOCA. Third, the IORV event is a classic ATWS scenario.

The NUREG-1150[1081] Peach Bottom PRA "T3C" event tree is initiated by an IORV event, and is linked to subtrees for transient, LOCA, and ATWS scenarios. The SRV blowdown scenario for this generic issue was analyzed by setting the initiating event frequency to 1.3×10^{-3} event/RY, as discussed above, and calculating the various end state frequencies. The calculations were done using 10,000 samples and standard Monte Carlo uncertainty analysis techniques, and a truncation level of 10^{-10} event/RY.

Although the event trees contain sequences that end in plant damage states PDS-6 and PDS-7, which would involve large early releases, none of these sequences passed the 10^{-10} truncation threshold, and thus are not counted. The remainder of the sequences that led to core damage were as follows:

SRV Blowdown Scenario					
Sequence	Point Estimate	Mean	5th percentile	Median	95th percentile
All core damage sequences (CDF)	1.1×10^{-7}	1.5×10^{-7}	7.6×10^{-9}	7.3×10^{-8}	4.8×10^{-7}

There is no one highly-dominant sequence, but the majority of the dominant sequences involve the LOCA event trees. The low result is not surprising in that these detonation-induced SRV blowdowns are an increase of less than 1% to the IORV initiating event tree frequency (0.19/RY) already assumed in this PRA.

Burst Pipe: BWRs are generally well defended against LOCAs. Again, for this size LOCA, the coolant inventory loss is more than can be supplied by the RCIC system, but will be within the capacity of the HPCI system. However, after a few hours, the coolant leak (and the steam supply used to power HPCI) will depressurize the reactor, and the low-pressure systems will be needed to keep the reactor core covered.

This scenario was analyzed by constructing a new event tree. This new event tree was a simple copy of the existing event tree for the intermediate break "S1" LOCA, but the initiating event at the beginning of the tree was replaced by two top events: the detonation-induced pipe-break frequency

followed by the probability of not isolating the break, as described above. The remainder of the event tree is exactly the same as that for the "S1" LOCA.

As in the original "S1" LOCA event tree, the principal contributor to the CDF was a sequence where all the low pressure injection systems fail. This is also the only sequence which results in a large early release of radioactivity; in the other sequences that lead to severe core damage, containment failure is avoided by containment venting. This sequence leads to Plant Damage State 1 (PDS-1). (The end state nomenclature is S1-V2V3V4NU11.)

The calculations were done using 10,000 samples and standard Monte Carlo uncertainty analysis techniques, with a truncation level of 10^{-10}. The results are as follows:

Burst Pipe Scenario					
Sequence	**Point Estimate**	**Mean**	**5th percentile**	**Median**	**95th percentile**
PDS-1 Sequences (Possible LERF)	1.5×10^{-7}	1.6×10^{-7}	1.0×10^{-9}	3.4×10^{-8}	6.7×10^{-7}
All other core damage sequences (CDF)	7.1×10^{-8}	7.1×10^{-8}	1.3×10^{-9}	2.9×10^{-8}	2.6×10^{-7}
Total:	2.1×10^{-7}	2.1×10^{-7}	3.0×10^{-9}	7.2×10^{-8}	7.8×10^{-7}

Again, as the table parameters themselves illustrate, the number of significant figures does not imply accuracy to this degree, but instead are provided as an aid in following the calculation. The most dominant sequence is a sequence in which a mis-calibration of the pressure sensors in the drywell defeats all of the low pressure ECCS systems, which may be somewhat plant-specific. If this sequence were not present, the PDS-1 end state frequency would drop by roughly a factor of 30, and the CDF would be reduced by about half.

The initiating event frequency for this "pipe burst" scenario is significant - addition of this sequence approximately doubles the "S1" intermediate LOCA frequency for the plant (normally 3×10^{-4}/RY). However, the LOCA sequences are relatively minor contributors to the overall CDF of the plant, because BWRs are so well-defended against loss of coolant events.

Large Early Release Frequency (LERF): The LERF is estimated based on the frequency of the sequence leading to PDS-1. All the other sequences result in core damage, but the containment integrity is preserved and the release of radioactivity to the environment is limited by venting of the containment from the wetwell airspace, which "scrubs" the release through the suppression pool.

PDS-1 can result in a spectrum of accident progression bins and source term groups. Some of these accident progression bins involve large early containment failure. To quote the description in the PRA, "There are no high RPV vessel breach scenarios because of the LOCA depressurizing the vessel. Since the drywell is flooded by water from the vessel, drywell melt-through is less likely in this case (only 0.36). There is some probability of overpressure failure or venting; but, the availability of containment heat removal in this sequence results in a high probability of no containment failure at all (0.536)."

The estimated frequency for PDS-1 for this issue is 1.6×10^{-7}/RY. If the mean probability of no containment failure is 0.536 for a PDS-1 event, then the probability of a large release is one minus this, or 0.464. Multiplying this by the estimated PDS-1 frequency, the product is an overall large early release frequency (LERF) of 7×10^{-8} large early releases per reactor-year.

Consequence Estimate

A rough estimate of the consequences was made, using the CRIC-ET Code[1795] and the Peach Bottom site. The results for a PDS-1 frequency of 1.6×10^{-7}/RY was on the order of 3 person-rem/year. A calculation based on a generic site population density might be higher than this, but this is well below the 100 person-rem/year cutoff in the MD 6.4 Handbook. Thus, this parameter is unlikely to be limiting.

Cost Estimate

Because of the low CDF and risk, a cost estimate would not affect the conclusions of this analysis. Therefore, no cost analysis was performed.

Other Considerations

(1) The scope of this analysis was restricted to BWRs, based on the identifying document[1822] and because of a belief that PWRs would be less susceptible, since PWRs have primary systems that are primarily liquid-filled, and are generally operated with an excess of dissolved hydrogen with the explicit purpose of limiting the amount of radiolysis-generated oxygen. The operational experience review conducted in the course of this evaluation revealed that a significant number of events involving hydrogen detonation/explosion have also occurred at US and other foreign PWRs. It is recognized that near the end of cycle, a certain amount of hydrogen can accumulate in the vapor space of a pressurizer which, in the event of an overpressure and subsequent PORV actuation, can and will build up in the relief tank. The potential for rapid oxidation does exist there, as seen in some of the events reported. Relevant operating experience and practices should be reviewed by the NRC, and the implications of hydrogen explosions in PWR piping and components should be assessed as a possible new GSI.

(2) Although the significance of this issue to the safety of the public is low, a burst pipe or a damaged SRV could cause a plant shutdown and necessitate some cleanup and repair, with a resultant increase in occupational risk exposure. Thus, it may be in the economic interest of licensees to take some preventive measures.

(3) The CDFs associated with this issue are well below the thresholds in NRC Management Directive (MD) 6.4. However, the LERF associated with the pipe burst scenario is less than a factor of two below the MD 6.4 threshold for plants with an existing LERF above 10^{-5}. It is expected that detonations (and some pipe bursts) will continue to occur. However, if more pipe bursts occur such that the estimated frequency is higher than the 1.3×10^{-3} event/RY used in this analysis, or if there is operational experience that the likelihood of non-isolation of the break is higher than that estimated in this analysis, then the analysis should be reevaluated.

(4) There have been a number of hydrogen combustion events during maintenance and/or shutdown operations. These events were not included in the scope of this generic issue

because they were thought to be insignificant in terms of the health and safety of the public because the low pressure ECCS is operational during hot shutdown and hot standby, and the pressure is nearly atmospheric while in cold shutdown and refueling. However, such events can be very significant to the occupational safety of plant personnel.

(5) Several events at the foreign BWRs have shown that hydrogen combustion in the valve control lines resulted in excess pressure which, in turn, caused the compression of the central guide pins and damage to the pilot valves. The ensuing deformation of valve internals may cause an impairment of their opening function, and the damage to the pilot valves may lead to failure-to-close of individual safety and relief valves, resulting in a LOCA.

(6) The industry initiatives reported[1829] to the NRC, especially the BWROG efforts to survey the US BWR licensees for the actions taken in response to the pipe rupture events in non-U.S. BWRs, indicated that some of the US BWR licensees had not yet completed their reviews. As of August 2003, the following actions were reported:

- All plants had reviewed the available literature (e.g., RICSIL, SIL, Information Notice, WANO summary, and BWROG guidance document);
- Fifteen of the 16 plants with RHR-SCM piping and 18 of the 19 plants with RHR head spray piping had evaluated that piping. (Survey response answers "NA" are interpreted to mean that the piping is not present or is disconnected.) Remaining plant evaluations were ongoing, but were not complete;
- A risk category assessment of plant equipment had been completed or was in progress at all of the plants.
- Thirteen plants had completed or were performing physical walk-downs of plant equipment;
- Seven plants had reviewed plant drawings. Some of these plants may substitute the drawing reviews for a walk-down, some may conduct a walkdown at a later date.
- 17 plants have identified potentially vulnerable equipment and are pursuing appropriate solutions to address these configurations (e.g., procedure notes, procedure changes, equipment temperature monitoring, configuration analysis, and equipment modification, if necessary).

No new information had been received by the time this evaluation was completed in December 2003.

Suggestions

(1) Hydrogen explosions can potentially threaten plant safety by challenging the integrity of the safety systems, components and equipment, and/or endanger plant personnel safety. To avoid these explosions, the best course of action for licensees would be to prevent build-up of combustible levels of H_2-O_2 mixtures by frequent venting of piping and components that are stagnant and are not normally kept filled.

(2) There are many potential ignition sources at operating plants, and many more exist when routine maintenance activities are conducted during refueling outages. Therefore, it is not practical to eliminate all the likely sources of hydrogen ignition. In fact, the ignition energy for the H_2-O_2 combustible mixture is so low that the ignition sources become practically irrelevant. Therefore, the most prudent action for licensees to take is to prevent the accumulation of detonatable levels of H_2-O_2 mixture. As evidenced by reported events, licensees should take sufficient care during maintenance activities to ensure that no stagnant pipes and components with potentially combustible levels of H_2-O_2 mixtures exist.

(3) GE RTICSIL No. 85 identified and ranked in the reverse order of vulnerability (high-to-low) various piping and components determined to be vulnerable, and recommended certain actions. In "Bin 4-D" of the GE RTICSIL No. 85 table, it was indicated that for safety and relief valves, although hydrogen accumulation is possible, the detonation potential is mitigated by the water vapor content in excess of 5 v/o. Hence, no corrective action is required. However, based on a review of power reactor operational experience, there have been hydrogen explosion events involving rupture of SRVs. In some instances, the presence of a small amount of metal, e.g., inside the valve body, is known to have served as a catalyst and ignited the H_2-O_2 mixture resulting in valve rupture/leakage. One possible cost-effective fix would be to replace the metal segments with palladium (a hydrogen adsorber) or coat them with platinum as catalyst. This would enable the valve body to serve as a "mini recombiner" and prevent build-up of explosive levels of H_2-O_2 mixtures, as successfully done at the Finnish plants.

(4) No unmanageable loss of coolant occurred in the reported SRV failure events; however, if the leaky/ruptured valves had not been isolated or the leakage was large enough, the potential for a LOCA would have existed. Hence, a caution to licensees in this regard is warranted. One vehicle to accomplish this would be a generic communication in which staff review of relevant US and foreign operational experience and the associated risk implications of "unisolatable" breaks would be summarized. This generic communication could also be used to reemphasize good maintenance practices.

CONCLUSION

The detonation-induced SRV failure scenario has a mean CDF well below the cutoff in the MD 6.4 Handbook with no significant LERF and was dropped from further consideration. The CDF associated with detonation-induced pipe bursts was also well below the cutoff, and the LERF associated with this scenario was below the 10^{-7} cutoff. Therefore, it was concluded that there was insufficient justification for this issue to continue to the technical assessment stage. However, it was recommended that the above findings and suggestions be communicated to licensees.[1833]

REFERENCES

121. IE Bulletin No. 78-03, "Potential Explosive Gas Mixture Accumulations Associated with BWR Offgas System Operations," U.S. Nuclear Regulatory Commission, February 8, 1978.

636. Memorandum for R. DeYoung and H. Denton from C. Heltemes, "Vapor Binding of Auxiliary Feedwater Pumps," November 21, 1983.

637. AEOD/C404, "Steam Binding of Auxiliary Feedwater Pumps," Office for Analysis and Evaluation of Operational Data, U.S. Nuclear Regulatory Commission, July 1984.

1081. NUREG-1150, "Severe Accident Risks: An Assessment for Five U.S. Nuclear Power Plants," U.S. Nuclear Regulatory Commission, (Vol. 1) December 1990, (Vol. 2) December 1990, (Vol. 3) January 1991.

1318. NUREG/CR-4550, "Analysis of Core Damage Frequency from Internal Events," U.S. Nuclear Regulatory Commission, (Vol. 1, Rev. 1) January 1990, (Vol. 2) April 1989, (Vol. 3, Rev. 1) April 1990, (Vol. 4, Rev. 1) August 1989, (Vol. 5, Rev. 1) April 1990, (Vol. 6) April 1987, (Vol. 7, Rev. 1) May 1990.

1547. Letter to All Holders of Operating Licenses or Construction Permits for Nuclear Power Reactors, "Research Results on Generic Safety Issue 106, 'Piping and the Use of Highly Combustible Gases in Vital Areas,' (Generic Letter 93-06)," U.S. Nuclear Regulatory Commission, October 25, 1993.

1552. NRC Information Notice No. 89-44, "Hydrogen Storage on the Roof of the Control Room," U.S. Nuclear Regulatory Commission, April 27, 1989.

1795. NUREG/CR-4551, "Evaluation of Severe Accident Risks," U.S. Nuclear Regulatory Commission, (Vol. 1, Rev. 1) December 1993, (Vol. 4, Rev. 1, Part 1) December 1990, (Vol. 7, Rev. 1) March 1993.

1817. AEOD-E218, "Potential for Air Binding or Degraded Performance of BWR RHR System Pumps During the Recirculation Phase of a LOCA," U.S. Nuclear Regulatory Commission, March 31, 1982.

1822. Memorandum to J. Flack from F. Eltawila, "Information on Generic Issue 195, 'Hydrogen Combustion in Foreign BWR Piping,'" March 13, 2003.

1823. NRC Information Notice 2002-15, "Hydrogen Combustion Events in Foreign BWR Piping," April 12, 2002, (Supplement 1) May 6, 2003.

1825. Information Notice No. 88-23, "Potential for Gas Binding of High-Pressure Safety Injection Pumps During a Loss-of-Coolant Accident," U.S. Nuclear Regulatory Commission, May 12, 1998, (Supplement 1) January 5, 1989, (Supplement 2) January 31, 1990, (Supplement 3) December 10, 1990, (Supplement 4) December 18, 1992, (Supplement 5) April 23, 1999.

1826. Information Notice No. 89-80, "Potential for Water Hammer, Thermal Stratification, and Steam Binding in High-Pressure Coolant Injection Piping," U.S. Nuclear Regulatory Commission, December 1, 1989.

1827. Information Notice No. 90-64, "Potential for Common-Mode Failure of High Pressure Safety Injection Pumps or Release of Reactor Coolant Outside Containment During a Loss-of-Coolant Accident," U.S. Nuclear Regulatory Commission, October 4, 1990.

1828. NRC Letter to All Nuclear Power Reactor Licensees and Applicants, "Information to Licensees Regarding Two NRC Inspection Manual Sections on Resolution of Degraded and Nonconforming Conditions and on Operability (Generic Letter 91-18)," November 7, 1991, (Revision 1) October 8, 1997.

1829. Memorandum to F. Eltawila from G. Holahan, "Hydrogen Detonations in BWRs," March 11, 2003.

1830. AEOD/E910, "Potential for Gas Binding of High Head Safety Injection Pumps Resulting From Inservice Testing of VCT Outlet Isolation Valves," Office for Analysis and Evaluation of Operational Data, U.S. Nuclear Regulatory Commission, December 1989.

1831. AEOD/T515, "Residual Heat Removal Service Water Booster Pump Air Binding at Brunswick Unit 1," Office for Analysis and Evaluation of Operational Data, U.S. Nuclear Regulatory Commission, December 5, 1985.

1832. AEOD/T927, "Follow-up on Steam Binding of AFW Pumps," Office for Analysis and Evaluation of Operational Data, U.S. Nuclear Regulatory Commission, December 29, 1989.

1833. Memorandum to A. Thadani from J. Flack, "Results of Initial Screening of Generic Issue 195, 'Hydrogen Combustion in Foreign BWR Piping,'" February 23, 2004.

REFERENCES

* [Accession Numbers] are provided for easy retrieval of those documents that are accessible from the NRC Nuclear Documents System Advanced Design (NUDOCS/AD) or the Agencywide Documents Access and Management Systems (ADAMS)

1. SECY-81-513, "Plan for Early Resolution of Safety Issues," August 25, 1981. [8109140067]

2. NUREG-0371, "Task Action Plans for Generic Activities (Category A)," U.S. Nuclear Regulatory Commission, November 1978.

3. NUREG-0471, "Generic Task Problem Descriptions (Categories B, C, and D)," U.S. Nuclear Regulatory Commission, June 1978.

4. NUREG-0572, "Review of Licensee Event Reports (1976-1978)," U.S. Nuclear Regulatory Commission, September 1979.

5. IE Circular No. 77-07, "Short Period During Reactor Startup," U.S. Nuclear Regulatory Commission, April 15, 1977. [9104240445]

6. IE Bulletin No. 79-12, "Short Period Scrams at BWR Facilities," U.S. Nuclear Regulatory Commission, May 31, 1979. [7906060168]

7. Memorandum for D. Ross from H. Richings, "RDA Statistical Analysis," June 17, 1975. [8105050833]

8. SECY-80-325, "Special Report to Congress Identifying New Unresolved Safety Issues," July 9, 1980. [8103180932]

9. Federal Register Notice 54 FR 16030, "Draft Regulatory Guide; Withdrawal," April 20, 1989.

10. NUREG/CR-3992, "Collection and Evaluation of Complete and Partial Losses of Off-Site Power at Nuclear Power Plants," U.S. Nuclear Regulatory Commission, February 1985.

11. NUREG-0800, "Standard Review Plan for the Review of Safety Analysis Reports for Nuclear Power Plants," U.S. Nuclear Regulatory Commission, (1st Edition) November 1975, (2nd Edition) March 1980, (3rd Edition) July 1981.

12. Draft Regulatory Guide and Value/Impact Statement, Task SC 708-4, "Qualification and Acceptance Tests for Snubbers Used in Systems Important to Safety," U.S. Nuclear Regulatory Commission, February 1981. [9503290322]

13. NUREG-0691, "Investigation and Evaluation of Cracking Incidents in Piping in Pressurized Water Reactors," U.S. Nuclear Regulatory Commission, September 1980.

14. ASME Boiler and Pressure Vessel Code, Section XI, "Rules for Inservice Inspection of Nuclear Power Plant Components," American Society of Mechanical Engineers, 1974.

15. Nuclear Safety, Vol. 14, No. 3, 'Probability of Damage to Nuclear Components Due to Turbine Failure," S. H. Busch, 1973.

16. WASH-1400 (NUREG-75/014), "Reactor Safety Study, An Assessment of Accident Risks in U.S. Commercial Nuclear Power Plants," U.S. Atomic Energy Commission, October 1975.

17. NUREG/CR-0255, "CONTEMPT-LT/028: A Computer Code for Predicting Containment Pressure-Temperature Response to a Loss-of-Coolant Accident," U.S. Nuclear Regulatory Commission, March 1979.

18. Regulatory Guide 1.46, "Protection Against Pipe Whip Inside Containment," U.S. Atomic Energy Commission, May 1973. [7907100189]

19. NUREG-0588, "Interim Staff Position on Environmental Qualification of Safety-Related Electrical Equipment," U.S. Nuclear Regulatory Commission, November 1979, (Rev. 1) July 1981.

20. Memorandum for R. Fraley from R. Mattson, "ACRS PWR Question Regarding Effect of Pressurizer Heater Uncovery on Pressurizer Pressure Boundary Integrity," November 5, 1979. [8004100530]

21. Regulatory Guide 1.96, "Design of Main Steam Isolation Valve Leakage Control Systems for Boiling Water Reactor Nuclear Power Plants," U.S. Nuclear Regulatory Commission, (Rev. 1) June 1976. [7907100349]

22. Memorandum for H. Denton from C. Michelson, "BWR Jet Pump Integrity," May 23, 1980. [8006180872]

23. Memorandum for Distribution from W. Minners, "Generic Issues Screening Activity," September 30, 1981. [8110190695]

24. IE Bulletin No. 79-27, "Loss of Non-Class IE Instrumentation and Control Power System Bus During Operation," U.S. Nuclear Regulatory Commission, November 30, 1979. [7910250499]

25. Memorandum for F. Schroeder from T. Novak, "Application of SRP 15.4.6 Acceptance Criteria to Operating Reactors," December 12, 1980. [8102260305]

26. IE Information Notice 80-34, "Boron Dilution of Reactor Coolant During Steam Generator Decontamination," U.S. Nuclear Regulatory Commission, September 26, 1980. [8008220239]

27. Memorandum for R. Baer from A. Thadani, "RRAB Preliminary Assessment of the Reactor Coolant Pump Seal Failure Problem," December 12, 1980. [8103050765]

28. Memorandum for T. Novak from P. Check, "Spurious Automatic Switchover of ECCS from the Injection Mode to the Recirculation Mode," January 21, 1981. [8102280446]

29. Memorandum for T. Novak, et al., from A. Thadani, "Comparative Risk Assessment of ECCS Functional Switchover Options," April 1, 1981. [8104130436]

30. Memorandum for G. Lainas, et al., from P. Check, "BWR Scram Discharge System Safety Evaluation," December 1, 1980. [8101190514]

31. Memorandum for H. Denton from M. Ernst, "DST Evaluation of the Automatic Air Header Dump on Boiling Water Reactors," December 8, 1980. [8101230203]

32. NUREG-0138, "Staff Discussion of Fifteen Technical Issues Listed in Attachment to November 3, 1976 Memorandum from Director, NRR to NRR Staff," U.S. Nuclear Regulatory Commission, November 1976.

33. Memorandum for B. Sheron from M. Srinivasan, "Probabilities and Consequences of LOCA/Loss of Offsite Power (LOOP) Sequences," April 13, 1982. [8206300420]

34. Memorandum for the Commissioners from W. Dircks, "Resolution of Issue Concerning Steam-line Break with Small LOCA," December 23, 1980. [8101150357]

35. Memorandum for S. Hanauer from T. Murley, "Diesel Generator Loading Problems Related to SIS Reset on Loss of Offsite Power," February 25, 1981. [8110190723]

36. Memorandum for C. Michelson from H. Denton, "Combination Primary/Secondary System LOCA," December 8, 1981. [8201200049]

37. NUREG/CR-2083, "Evaluation of the Threat to PWR Vessel Integrity Posed by Pressurized Thermal Shock Events," U.S. Nuclear Regulatory Commission, October 7, 1981.

38. "Generic Issues Tracking System Report," U.S. Nuclear Regulatory Commission, December 17, 1981.

39. NUREG/CR-1707, "BWR Refill-Reflood Program, Task 4.2 - Core Spray Distribution Final Report," U.S. Nuclear Regulatory Commission, March 1981.

40. NEDO-24712, "Core Spray Design Methodology Confirmation Tests," General Electric Company, August 1979.

41. Nuclear Safety, Vol. 11, No. 4, pp. 296-308, "Tornado Considerations for Nuclear Power Plant Structures Including the Spent Fuel Storage Pool," P. L. Doan, July 1970.

42. Regulatory Guide 1.76, "Design Basis Tornado for Nuclear Power Plants," U.S. Nuclear Regulatory Commission, April 1974. [7907100297]

43. Regulatory Guide 1.117, "Tornado Design Classification," U.S. Nuclear Regulatory Commission, June 1976, (Rev. 1) April 1978 [7907110104].

44. NUREG-0705, "Identification of New Unresolved Safety Issues Relating to Nuclear Power Plant Stations," U.S. Nuclear Regulatory Commission, March 1981.

45. ANSI/ANS-58.8, "Time Response Design Criteria for Nuclear Safety Related Operator Actions," American Nuclear Society, 1984.

46. NRC Memorandum and Order CLI-80-21, May 27, 1980. [8007280084]

47. Memorandum for H. Denton from C. Michelson, "Degradation of Internal Appurtenances in LWR Piping," January 19, 1981. [8102020069]

48. NUREG-0660, "NRC Action Plan Developed as a Result of the TMI-2 Accident," U.S. Nuclear Regulatory Commission, May 1980, (Rev. 1) August 1980.

49. ISA S67.04 (ANSI N719), Draft F, "Setpoints for Nuclear Safety-Related Instrumentation Used in Nuclear Power Plants," Instrument Society of America, May 22, 1979.

50. Draft Regulatory Guide and Value/Impact Statement, TASK IC 010-5, "Proposed Revision 2 to Regulatory Guide 1.105, Instrument Setpoints," U.S. Nuclear Regulatory Commission, December 1981. [8112230003]

51. Memorandum for C. Michelson from H. Denton, "BWR Jet Pump Integrity," July 11, 1980. [8009160606]

52. IE Bulletin No. 80-07, "BWR Jet Pump Assembly Failure," U.S. Nuclear Regulatory Commission, April 4, 1980. [8002280648]

53. SIL No. 330, "Jet Pump Beam Cracks," General Electric Company/BWR Product Service, June 9, 1980.

54. NUREG/CR-1659, "Reactor Safety Study Methodology Applications Program," U.S. Nuclear Regulatory Commission, (Vol. 1) April 1981, (Vol. 2) May 1981, (Vol. 3) June 1982, (Vol. 4) November 1981.

55. Regulatory Guide 1.97, "Instrumentation for Light-Water-Cooled Nuclear Power Plants to Assess Plant and Environs Conditions During and Following an Accident," U.S. Nuclear Regulatory Commission, December 1975, (Rev. 1) August 1977 [8001240572], (Rev. 2) December 1980 [7912310387], (Rev. 3) May 1983 [8502060303].

56. Memorandum for R. Mattson, et al., from R. DeYoung, "Draft Report of Completion of Generic Activity A-34," March 28, 1979. [7904180060]

57. NUREG-0578, "TMI-2 Lessons Learned Task Force Status Report and Short-Term Recommendations," U.S. Nuclear Regulatory Commission, July 1979.

58. Memorandum for Commissioner Ahearne from H. Denton, "Instrumentation to Follow the Course of an Accident," September 4, 1979. [8005140362]

59. NUREG-0422, "SER for McGuire Nuclear Station Units 1 and 2," U.S. Nuclear Regulatory Commission, March 1978.

60. NUREG-0606, "Unresolved Safety Issues Summary," U.S. Nuclear Regulatory Commission, Vol. 7 No. 3, August 1985.

61. Memorandum for J. Murphy from B. Sheron, "Documentation of Generic Safety Issues on Degraded Voltage Protection," July 13, 1994. [9407250133]

62. NUREG/CR-2136, "Effects of Postulated Event Devices on Normal Operation of Piping Systems in Nuclear Power Plants," U.S. Nuclear Regulatory Commission, May 1981.

63. NUREG/CR-2189, "Probability of Pipe Fracture in the Primary Coolant Loop of a PWR Plant," U.S. Nuclear Regulatory Commission, September 1981.

64. NUREG/CR-2800, "Guidelines for Nuclear Power Plant Safety Issue Prioritization Information Development," U.S. Nuclear Regulatory Commission, February 1983, (Supplement 1) May 1983, (Supplement 2) December 1983, (Supplement 3) September 1985, (Supplement 4) July 1986, (Supplement 5) July 1996.

65. Memorandum for H. Denton from R. Minogue, "Research Information Letter No. 117, 'Probability of Large LOCA Induced by Earthquakes,'" April 10, 1981. [8104220512]

66. Regulatory Guide 1.6, "Independence Between Redundant Standby (Onsite) Power Sources and Between Their Distribution Systems (Safety Guide 6)," U.S. Atomic Energy Commission, March 1971. [7907100064]

67. NRC Letter to All Power Reactor Licensees from B. Grimes, "OT Position for Review and Acceptance of Spent Fuel Storage and Handling Applications," April 14, 1978. [7910310568]

68. Memorandum for R. Fraley from K. Kniel, "Draft Task Action Plan for TASK A-45, Shutdown Decay Heat Removal Requirements," May 22, 1981. [8106010652]

69. NUREG-0880, "Safety Goals for Nuclear Power Plants: A Discussion Paper," U.S. Nuclear Regulatory Commission, February 1982, (Rev. 1) May 1983.

70. NUREG-0348, "Demographic Statistics Pertaining to Nuclear Power Reactor Sites," U.S. Nuclear Regulatory Commission, November 1979.

71. Memorandum for S. Hanauer from D. Eisenhut, "Proposed Recommendations for Improving the Reliability of Open Cycle Service Water Systems," March 19, 1982. [8204190039]

72. AEOD/C202, "Report on Service Water System Flow Blockages by Bivalve Mollusks at Arkansas Nuclear One and Brunswick," Office for Analysis and Evaluation of Operational Data, U.S. Nuclear Regulatory Commission, February 1982. [8202260124]

73. TID-14844, "Calculation of Distance Factors for Power and Test Reactor Sites," U.S. Atomic Energy Commission, March 23, 1962. [8202010067]

74. AEOD/C001, "Report on the Browns Ferry 3 Partial Failure to Scram Event on June 28, 1980," Office for Analysis and Evaluation of Operational Data, U.S. Nuclear Regulatory Commission, July 30, 1980. [8008140575]

75. Memorandum for H. Denton from C. Michelson, "Engineering Evaluation of the Salt Water System (SSWS) Flow Blockage at the Pilgrim Nuclear Power Station by Blue Mussels (Mytilus Edilus)," May 6, 1982. [8205130114]

76. NUREG/CR-2497, "Precursors to Potential Severe Core Damage Accidents: 1969-1979, A Status Report," U.S. Nuclear Regulatory Commission, June 1982.

77. IEEE Std 352, "IEEE Guide for General Principles of Reliability Analysis of Nuclear Power Generating Station Protection Systems," The Institute of Electrical and Electronics Engineers, Inc., 1976.

78. NUREG/CR-1496, "Nuclear Power Plant Operating Experience - 1979," U.S. Nuclear Regulatory Commission, May 1981.

79. NUREG-0109, "Occupational Radiation Exposure at Light Water Cooled Power Reactors 1969-1975," U.S. Nuclear Regulatory Commission, August 1976.

80. DOE/ET/34204-43, "Dilute Chemical Decontamination Program - Final Report," U.S. Department of Energy, August 1981.

81. IEEE Std 317, "Electrical Penetration Assemblies in Containment Structures for Nuclear Power Generating Stations," The Institute of Electrical and Electronics Engineers, Inc., 1976.

82. Regulatory Guide 1.63, "Electrical Penetration Assemblies in Containment Structures for Light-Water-Cooled Nuclear Power Plants," U.S. Nuclear Regulatory Commission, October 1973, (Rev. 1) May 1977, (Rev. 2) July 1978 [7907100240], (Rev. 3) February 1987.

83. Memorandum for K. Kniel from M. Srinivasan, "Generic Issues Tracking System (GITS) B-70; Power Grid Frequency Degradation and Effect on Primary Coolant Pumps," July 31, 1981. [8109140246]

84. Memorandum for C. Berlinger from E. Butcher, "Diagnostic Evaluation at Quad Cities Nuclear Power Station (TAC Nos. M88667/M88668)," June 8, 1994. [9406130249]

85. Regulatory Guide 1.86, "Termination of Operating Licenses for Nuclear Reactors," U.S. Nuclear Regulatory Commission, June 1974. [8404100042, 9009140263]

86. Memorandum for T. Murley from M. Ernst, "Prioritization of New Requirements for PWR Feedwater Line Cracks," June 30, 1981. [8108030041]

87. Memorandum for R. Tedesco from T. Speis, "Supplement 2 to the Safety Evaluation Report for Grand Gulf Nuclear Station, Units 1 and 2," March 25, 1982. [8204080127]

88. Memorandum for All NRR Employees from H. Denton, "Regionalization of Selected NRR Functions," June 15, 1982. [9507280052]

89. NUREG/CR-1750, "Analysis, Conclusions, and Recommendations Concerning Operator Licensing," U.S. Nuclear Regulatory Commission, January 1981.

90. IEEE Std 323, "Qualifying Class 1E Equipment for Nuclear Power Generating Stations," The Institute of Electrical and Electronics Engineers, Inc., 1974.

91. Regulatory Guide 1.89, "Environmental Qualification of Certain Electric Equipment Important to Safety for Nuclear Power Plants," U.S. Nuclear Regulatory Commission, November 1974 [7907100326], (Rev. 1) June 1984 [8407110475].

92. SECY-81-504, "Equipment Qualification Program Plan," August 20, 1981. [8109220949]

93. NUREG-0611, "Generic Evaluation of Feedwater Transients and Small-Break Loss-of-Coolant Accidents in Westinghouse Designed Operating Plants," U.S. Nuclear Regulatory Commission, January 1980.

94. NUREG-0626, "Generic Evaluation of Feedwater Transients and Small Break Loss-of-Coolant Accidents in GE-Designed Operating Plants and Near-Term Operating License Applications," U.S. Nuclear Regulatory Commission, January 1980.

95. NUREG-0635, "Generic Evaluation of Feedwater Transients and Small Break Loss-of-Coolant Accidents in Combustion Engineering-Designed Operating Plants," U.S. Nuclear Regulatory Commission, February 1980.

96. NUREG-0565, "Generic Evaluation of Small Break Loss-of-Coolant Accident Behavior in Babcock & Wilcox Designed 177-FA Operating Plant," U.S. Nuclear Regulatory Commission, January 1980.

97. NUREG-0623, "Generic Assessment of Delayed Reactor Coolant Pump Trip During Small Break Loss-of-Coolant Accidents in Pressurized Water Reactors," U.S. Nuclear Regulatory Commission, November 1979.

98. NUREG-0737, "Clarification of TMI Action Plan Requirements," U.S. Nuclear Regulatory Commission, November 1980, (Supplement 1) January 1983.

99. ANSI/ANS 56.8, "Containment System Leakage Testing Requirements," American National Standards Institute, 1981.

100. Letter to General Electric Company from R. Tedesco (NRC), "Acceptance for Reference Topical Report NEDO-24712: Core Spray Design Methodology Confirmation Tests," January 30, 1981. [8103270130]

101. SECY-82-475, "Staff Resolution of the Reactor Coolant Pump Trip Issue," November 30, 1982. [8306030370]

102. NUREG/CR-0848, "Summary and Bibliography of Operating Experience with Valves in Light-Water-Reactor Nuclear Power Plants for the Period 1965-1978," U.S. Nuclear Regulatory Commission, August 1979.

103. Memorandum for M. Ernst from B. Fourest, "Review of ECCS Actuations on U.S. PWRs," June 11, 1981. [8107160006]

104. Memorandum for C. Michelson from H. Denton, "NRR Responses to AEOD Recommendations on the Arkansas Nuclear One Loss of Offsite Power Event of April 7, 1980," February 13, 1981. [8102270127]

105. Nuclear Power Experience, Volume BWR-2, Book-2, Section IX.A, Nuclear Power Experience, Inc., May 1982.

106. Memorandum for H. Denton from C. Michelson, "Lessons Learned from the Crystal River Transient of February 26, 1980 - Correcting Atmospheric Dump Valve Opening Upon Loss of Integrated Control System Power," May 23, 1980. [8009150079]

107. Memorandum for H. Denton from C. Michelson, "Potential for Unacceptable Interaction Between the Control Rod Drive System and Non-Essential Control Air System at the Browns Ferry Nuclear Plant," August 18, 1980. [8210120129]

108. Memorandum for R. Mattson from S. Hanauer, "Inadvertent Boron Dilution," March 10, 1982. [8205130278]

109. Memorandum for T. Murley from R. Mattson, "Inadvertent Boron Dilution," September 15, 1981. [8110080185]

110. NUREG/CR-2798, "Evaluation of Events Involving Unplanned Boron Dilutions in Nuclear Power Plants," U.S. Nuclear Regulatory Commission, July 1982.

111. Letter to R. Curtis (NRC) from N. DeMuth (LANL), "Analysis of Unmitigated Boron Dilution Events," November 18, 1981. [9507280099]

112. Transactions of the American Nuclear Society and the European Nuclear Society, 1984 International Conference on Nuclear Power - A Global Reality, November 11-16, 1984, Volume 47, pp. 254-256, "Analysis of Unmitigated Boron Dilution Events in Pressurized Water Reactors During Shutdown," B. Nassersharif, J. Wing (LANL).

113. EPRI NP-1194, "Operation and Design Evaluation of Main Coolant Pumps for PWR and BWR Service," Electric Power Research Institute, September 1979.

114. EPRI NP-2092, "Nuclear Unit Operating Experience, 1978 and 1979 Update," Electric Power Research Institute, October 1981.

115. NUREG/CR-3069, "Interaction of Electromagnetic Pulse with Commercial Nuclear Power Plant Systems," U.S. Nuclear Regulatory Commission, February 1983.

116. Letter to D. Switzer (Northeast Nuclear Energy Company) from G. Lear (NRC), "Millstone Nuclear Power Station Units Nos. 1 and 2," June 2, 1977. [9507280126]

117. NRC Letter to All Power Reactor Licensees (Except Humboldt Bay), "Adequacy of Station Electric Distribution Systems Voltages," August 8, 1979. [8005120354]

118. Memorandum for V. Stello from H. Denton, "Guidelines for Evaluating Qualification of Class IE Electrical Equipment in Operating Reactors," November 13, 1979. [7912190733]

119. Memorandum for K. Kniel from W. Gammill, "Need for Generic Issue B-67, Control and Monitoring of Radioactive Materials Released in Effluents and Performance of Radwaste Systems," November 20, 1981. [8201130493]

120. NUREG-0442, "Technical Report on Operating Experience with BWR Offgas Systems," U.S. Nuclear Regulatory Commission, April 1978.

121. IE Bulletin No. 78-03, "Potential Explosive Gas Mixture Accumulations Associated with BWR Offgas System Operations," U.S. Nuclear Regulatory Commission, February 8, 1978. [7909050232]

122. NRC Working Paper on Appendix J to 10 CFR Part 50, "Leak Tests for Primary and Secondary Containments of Light-Water-Cooled Nuclear Power Plants," May 17, 1982. [8401040228]

123. NRC Working Paper on Draft Regulatory Guide (MS021-5), "Containment System Leakage Testing," May 1982. [8405240527]

124. NUREG-0193, "FRANTIC - A Computer Code for Time-Dependent Unavailability Analysis," U.S. Nuclear Regulatory Commission, October 1977.

125. NRC Letter to the Northern States Power Company, "Order for Modification of License Concerning BWR Scram Discharge Systems," January 9, 1981. [8103250282]

126. Memorandum for R. Vollmer from T. Murley, "PWR Feedwater Line Cracks - New Regulatory Requirements," March 10, 1981. [8103250569]

127. Memorandum for H. Kouts from B. Rusche, "Quantification of Inherent Safety Margins in Seismic Design (SAFER-76-5)," June 7, 1976. [8003100435]

128. Memorandum for S. Levine from E. Case, "Quantification of Inherent Safety Margins in Seismic Design," June 16, 1977. [8103270937]

129. Memorandum for H. Denton from S. Levine, "RES Response to NRR User Request on Quantification of Inherent Safety Margins to Seismic Design," November 1, 1978. [8003100425]

130. Memorandum for S. Levine from H. Denton, "Seismic Safety Margins Research Program," February 23, 1979. [8003280774]

131. NUREG/CR-2015, "SSMRP Phase I Final Report," U.S. Nuclear Regulatory Commission, (Vol. 1) April 1981, (Vol. 2) July 1981, (Vol. 3) January 1983, (Vol. 4) June 1982, (Vol. 5) August 1981, (Vol. 6) October 1981, (Vol. 8) September 1984, (Vol. 9) September 1981, (Vol. 10) July 1981.

132. Memorandum for R. Minogue from H. Denton, "NRR Research Needs in Seismic Analyses Methodology," April 8, 1982. [8706040051]

133. NUREG-0784, "Long Range Research Plan FY 1984-1988," U.S. Nuclear Regulatory Commission, August 1982.

134. SECY-82-53, "Possible Relocation of Design Controlling Earthquakes in the Eastern U.S.," U.S. Nuclear Regulatory Commission, February 5, 1982. [8203050077]

135. NUREG-0484, "Methodology for Combining Dynamic Responses," U.S. Nuclear Regulatory Commission, September 1978, (Rev. 1) May 1980.

136. Memorandum for W. Minners from R. Bosnak, "Comments on Generic Issue B-6," August 26, 1982. [8209280601]

137. Memorandum for W. Minners from F. Schauer, "Generic Issue B-6," September 2, 1982. [8401170090]

138. NUREG/CR-1924, "FRANTIC II - A Computer Code for Time Dependent Unavailability Analysis," U.S. Nuclear Regulatory Commission, April 1981.

139. Letter to W. Dickhoner (The Cincinatti Gas & Electric Company) from A. Giambusso (NRC), December 18, 1972. [8709240215]

140. Memorandum for R. Frahm from R. Emrit, "Summary Report on a Risk Based Categorization of NRC Technical and Generic Issues," June 30, 1989. [9507280169]

141. Regulatory Guide 1.150, "Ultrasonic Testing of Reactor Vessel Welds During Preservice and Inservice Examinations," U.S. Nuclear Regulatory Commission, June 1981 [8108040038], (Rev. 1) February 1983 [8808230046].

142. NRC Letter to Alabama Power Company, "Containment Purging During Normal Plant Operation," November 28, 1978. [7812140364]

143. NRC Letter to Nebraska Public Power District, "Containment Purging and Venting during Normal Operation," October 22, 1979. [7911190034]

144. Regulatory Guide 1.75, "Physical Independence of Electric Systems," U.S. Nuclear Regulatory Commission, February 1974, (Rev. 1) January 1975 [8605300425], (Rev. 2) September 1978 [7810050139].

145. Memorandum for D. Thatcher from R. Emrit, "Interim Criteria for Evaluating Steel Containment Buckling," June 21, 1982. [9507280196]

146. Regulatory Guide 1.133, "Loose-Part Detection Program for the Primary System of Light-Water-Cooled Reactors," U.S. Nuclear Regulatory Commission, September 1977, (Rev. 1) May 1981 [8106120320].

147. Regulatory Guide 1.20, "Comprehensive Vibration Assessment Program for Reactor Internals During Preoperational and Initial Startup Testing," U.S. Nuclear Regulatory Commission, December 1971, (Rev. 1) June 1975, (Rev. 2) May 1976 [7907100101].

148. "Memorandum of Agreement between the Institute of Nuclear Power Operations and the U.S. Nuclear Regulatory Commission," (Rev. 1) April 1, 1982. [8207010053]

149. Memorandum for J. Funches from R. Mattson, "Comments on Prioritization of Licensing Improvement Issues," February 2, 1983. [8401170099]

150. Regulatory Guide 1.47, "Bypassed and Inoperable Status Indication for Nuclear Power Plant Safety Systems," U.S. Atomic Energy Commission, May 1973. [7907100191]

151. SECY-82-111, "Requirements for Emergency Response Capability," March 11, 1982. [8203180409]

152. NUREG/CR-2417, "Identification and Analysis of Human Errors Underlying Pump and Valve Related Events Reported by Nuclear Power Plant Licensees," U.S. Nuclear Regulatory Commission, February 1982.

153. NUREG/CR-3621, "Safety System Status Monitoring," U.S. Nuclear Regulatory Commission, March 1984.

154. NRC Letter to Construction Permit Holders of B&W Designed Facilities, October 25, 1979.

155. NUREG-0667, "Transient Response of Babcock & Wilcox Designed Reactors," U.S. Nuclear Regulatory Commission, May 1980.

156. Memorandum for H. Denton from D. Eisenhut, "NUREG-0667, Transient Response of Babcock & Wilcox Designed Reactors, Implementation Plan," June 3, 1981. [8510070181]

157. Memorandum for D. Eisenhut from G. Lainas, "Status Report on Implementation of NUREG-0667 Category A Recommendations," December 15, 1981. [8201190550]

158. Memorandum for H. Denton from R. Mattson, "Review of Final Report of the B&W Reactor Transient Response Task Force (NUREG-0667)," August 8, 1980. [8010270109, 8010240413]

159. Memorandum for S. Hanauer from R. Mattson, "Design Sensitivity of B&W Reactors, Item II.E.5.1 of NUREG-0660," February 26, 1982. [8203170235]

160. Memorandum for R. Mattson from S. Hanauer, "Design Sensitivity of B&W Reactors," June 21, 1982. [8207150195]

161. NUREG/CR-1250, "Three Mile Island: A Report to the Commission and to the Public," U.S. Nuclear Regulatory Commission, January 1980.

162. NRC Letter to All Light Water Reactors, "Containment Purging and Venting During Normal Operation - Guidelines for Valve Operability," September 27, 1979. [9705190209]

163. NUREG-0305, "Technical Report on DC Power Supplies in Nuclear Power Plants," U.S. Nuclear Regulatory Commission, July 1977.

164. NUREG-0666, "A Probabilistic Safety Analysis of DC Power Supply Requirements for Nuclear Power Plants," U.S. Nuclear Regulatory Commission, April 1981.

165. Memorandum for M. Srinivasan from O. Parr and B. Sheron, "Generic Issue (GI) A-30, Adequacy of Safety Related DC Power Supplies, Development of Licensing Guidelines," March 12, 1982. [8401170018]

166. Memorandum for E. Case from R. Mattson, "Task No. D-3 Control Rod Drop Accident (BWRs)," March 6, 1978. [8001140319]

167. Federal Register Notice 44 FR 68307, "Decommissioning and Site Reclamation of Uranium and Thorium Mills," November 28, 1979.

168. NRC Letter to Arkansas Power & Light Company, "Order for Modification of License Concerning Primary Coolant System Pressure Isolation Valves," (Docket No. 50-313), April 20, 1981. [8104270071]

169. Memorandum for A. Ungaro (NRC) from F. Clark (ORNL), "Report on Standards and Requirements for Electrical Penetration Assemblies for Nuclear Reactor Containment Structures," December 13, 1978. [9507280225]

170. NUREG/CR-1345, "Nuclear Power Plant Design Concepts for Sabotage Protection," U.S. Nuclear Regulatory Commission, 1981.

171. Bulletin of the Atomic Scientists, Vol. 32, No. 8, pp. 29-36, "Nuclear Sabotage," M. Flood, October 1976.

172. Federal Register Notice 43 FR 10370, "[10 CFR Parts 30, 40, 50, and 70] Decommissioning Criteria for Nuclear Facilities, Advance Notice of Proposed Rulemaking," March 13, 1978.

173. NUREG-0586, "Final Generic Environmental Impact Statement on Decommissioning of Nuclear Facilities," U.S. Nuclear Regulatory Commission, August 1988.

174. NUREG-0585, "TMI Lessons Learned Task Force Final Report," U.S. Nuclear Regulatory Commission, October 1979.

175. ZAR-791030-01, "Report of the President's Commission on the Accident at Three Mile Island," J. G. Kemeny, et al., November 30, 1979.

176. Memorandum for J. Ahearne from M. Carbon, "Comments on the Pause in Licensing," December 11, 1979. [8001080218]

177. Memorandum for N. Moseley from J. Allan, "Operations Team Recommendations - IE/TMI Unit 2 Investigation," October 16, 1979. [8007160815]

178. EPRI NP-801, "ATWS: A Reappraisal, Part III, Frequency of Anticipated Transients," Electric Power Research Institute, July 1978.

179. NUREG-0020, "Licensed Operating Reactors, Status Summary Report," U.S. Nuclear Regulatory Commission, (Vol. 6, No. 2) February 1982.

180. NUREG-0580, "Regulatory Licensing Status Summary Report," U.S. Nuclear Regulatory Commission, (Vol. 11, No. 5) June 1982.

181. SECY-82-155, "Public Law 96-295, Section 307(B), Study of the Feasibility and Value of Licensing of Nuclear Plant Managers and Senior Licensee Officers," April 12, 1982. [8205050080]

182. NUREG/CR-0672, "Technology, Safety, and Costs of Decommissioning a Reference Boiling Water Reactor Power Station," U.S. Nuclear Regulatory Commission, June 1980.

183. NUREG-0153, "Staff Discussion of 12 Additional Technical Issues Raised by Responses to the November 3, 1976 Memorandum from Director, NRR to NRR Staff," December 1976.

184. Memorandum for R. Vollmer from D. Eisenhut, "Transmittal of Report on Threaded Fastener Experience in Nuclear Power Plants," August 25, 1982. [8209210482]

185. Memorandum for H. Denton from C. Michelson, "AEOD Report on the St. Lucie Natural Circulation Cooldown on June 11, 1980," December 24, 1980. [8101120011]

186. NUREG-0510, "Identification of Unresolved Safety Issues Relating to Nuclear Power Plants," U.S. Nuclear Regulatory Commission, January 1979.

187. NUREG/CR-2300, "PRA Procedures Guide," U.S. Nuclear Regulatory Commission, (Vols. 1 and 2) January 1983.

188. NUREG/CR-2644, "An Assessment of Offsite, Real-Time Dose Measurements for Emergency Situations," U.S. Nuclear Regulatory Commission, April 1982.

189. Memorandum for K. Goller from R. Mattson, "Proposed Changes to Regulatory Guide 1.97," July 29, 1982. [8208060339]

190. Memorandum for W. Dircks from S. Chilk, "Staff Requirements - Affirmative Session, 11:50 a.m., Friday July 16, 1982," July 20, 1982. [8208040248, 8209010068]

191. NUREG-0799, "Draft Criteria for Preparation of Emergency Operating Procedures," U.S. Nuclear Regulatory Commission, June 1981.

192. NUREG-0899, "Guidelines for Preparation of Emergency Operating Procedures - Resolution of Comments on NUREG-0799," U.S. Nuclear Regulatory Commission, September 3, 1982.

193. Memorandum for J. Martin, et al., from L. Shao, "Division Review Request: Amendments to 10 CFR Parts 30, 40, 50, 70, and 72 on Decommissioning Criteria for Nuclear Facilities," July 7, 1982. [8209140007]

194. IEEE Std 500, "IEEE Guide to the Collection and Presentation of Electrical, Electronic, and Sensing Component Reliability Data for Nuclear Power Generating Stations," The Institute of Electrical and Electronics Engineers, Inc., 1977.

195. Memorandum for E. Adensam from R. Riggs, "Status on Reactor Coolant Pump Seal Degradation Review," December 9, 1980. [8102280212]

196. Memorandum for H. Denton from S. Hanauer, "Preliminary Ranking of NRR Generic Safety Issues," March 26, 1982. [8204280036]

197. Federal Register Notice 45 FR 37011, "Decommissioning of Nuclear Facilities Regulation (10 CFR Parts 30, 40, 50, and 70)," May 30, 1980.

198. NUREG-0698, "NRC Plans for Cleanup Operations at Three Mile Island Unit 2," U.S. Nuclear Regulatory Commission, July 1980.

199. NUREG-0683, "Final Programmatic Environmental Impact Statement Related to Decontamination and Disposal of Radioactive Wastes Resulting from the March 28, 1979 Accident at Three Mile Island Nuclear Station, Unit 2," U.S. Nuclear Regulatory Commission, March 1981.

200. IEEE Std 603, "IEEE Standard Criteria for Safety Systems for Nuclear Power Generating Stations," The Institute of Electrical and Electronics Engineers, Inc., 1980.

201. IE Bulletin No. 80-24, "Prevention of Damage Due to Water Leakage Inside Containment (October 17, 1980 Indian Point 2 Event)," U.S. Nuclear Regulatory Commission, November 21, 1980. [8008220270]

202. Memorandum for G. Cunningham et al., from K. Goller, "Proposed Amendment to Part 50 on Radiation Programs, Including ALARA," September 10, 1982. [8209300046]

203. SECY-82-157A, 'Status Report on the NRR Investigation of the Effects of Electromagnetic Pulse (EMP) on Nuclear Power Plants," July 16, 1982. [8205050108]

204. NUREG-0855, "Health Physics Appraisal Program," U.S. Nuclear Regulatory Commission, March 1982.

205. NUREG-0761, "Radiation Protection Plans for Nuclear Power Reactor Licensees," U.S. Nuclear Regulatory Commission, March 1981.

206. Memorandum for L. Rubenstein from M. Ernst, "Proposed Position Regarding Containment Purge/Vent Systems," April 17, 1981. [8105260251]

207. IE Bulletin No. 81-03, "Flow Blockage of Cooling Water to Safety System Components by CORBICULA SP. (Asiatic Clam) and MYTILUS SP. (Mussel)," U.S. Nuclear Regulatory Commission, April 10, 1981. [8011040289]

208. Regulatory Guide 1.52, "Design, Testing and Maintenance Criteria for Post Accident Engineered-Safety-Feature Atmosphere Cleanup System Air Filtration and Adsorption Units of Light-Water-Cooled Nuclear Power Plants," U.S. Nuclear Regulatory Commission, June 1973, (Rev. 1) July 1976, (Rev. 2) March 1978 [7907100211].

209. Regulatory Guide 1.140, "Design, Testing, and Maintenance Criteria for Normal Ventilation Exhaust System Air Filtration and Adsorption Units of Light-Water-Cooled Nuclear Power Plants," U.S. Nuclear Regulatory Commission, March 1978, (Rev. 1) October 1979 [7911090195].

210. NUREG-0885, "U.S. Nuclear Regulatory Commission Policy and Planning Guidance," U.S. Nuclear Regulatory Commission, (Issue 1) January 1982, (Issue 2) January 1983, (Issue 3) January 1984, (Issue 4) February 1985, (Issue 5) February 1986, (Issue 6) September 1987.

211. Federal Register Notice 46 FR 764, "NRC Policy Statement on Cleanup of the Three Mile Island Plant," May 1, 1981.

212. NUREG-0772, "Technical Bases for Estimating Fission Product Behavior During LWR Accidents," U.S. Nuclear Regulatory Commission, June 1981.

213. Regulatory Guide 1.3, "Assumptions Used for Evaluating the Potential Radiological Consequences of a Loss-of-Coolant Accident for Boiling Water Reactors," U.S. Nuclear Regulatory Commission, November 1970, (Rev. 1) June 1973, (Rev. 2) June 1974 [7907100054].

214. Regulatory Guide 1.4, "Assumptions Used for Evaluating the Potential Radiological Consequences of a Loss-of-Coolant Accident for Pressurized Water Reactors," U.S. Nuclear Regulatory Commission, November 1970, (Rev. 1) June 1973, (Rev. 2) June 1974 [7907100058].

215. Memorandum for E. Sullivan from R. Bosnak, "Generic Issues," September 17, 1982. [8312290147]

216. Regulatory Guide 1.108, "Periodic Testing of Diesel Generator Units Used as Onsite Electric Power Systems at Nuclear Power Plants," U.S. Nuclear Regulatory Commission, August 1976, (Rev. 1) August 1977. [7907100397]

217. NUREG/CR-0660, "Enhancement of On-site Emergency Diesel Generator Reliability," U.S. Nuclear Regulatory Commission, February 1979.

218. Memorandum for D. Eisenhut, et al., from S. Hanauer, "Diesel Generator Reliability at Operating Plants," May 6, 1982. [8205280490]

219. Memorandum for S. Hanauer from R. Mattson, "Request for Prioritization of BWR Main Steam Line Isolation Valve Leakage as a Generic Issue," July 30, 1982. [8209130423]

220. IE Bulletin No. 82-23, "Main Steam Isolation Valve (MSIV) Leakage," U.S. Nuclear Regulatory Commission, July 16, 1982. [8204210393]

221. Regulatory Guide 1.48, "Design Limits and Loading Combinations for Seismic Category 1 Fluid System Components," U.S. Atomic Energy Commission, May 1973. [7907100195]

222. NUREG-0479, "Report on BWR Control Rod Drive Mechanical Failures," U.S. Nuclear Regulatory Commission, January 1979.

223. NUREG-0462, "Technical Report on Operating Experience with BWR Pressure Relief Valves," U.S. Nuclear Regulatory Commission, July 1978.

224. NUREG-0654, "Criteria for Preparation and Evaluation of Radiological Emergency Response Plans and Preparedness in Support of Nuclear Power Plants," U.S. Nuclear Regulatory Commission, February 1980, (Rev. 1) November 1980.

225. Regulatory Guide 1.33, "Quality Assurance Program Requirements (Operation)," U.S. Nuclear Regulatory Commission, November 1972, (Rev. 1) February 1977, (Rev. 2) February 1978 [7907100144].

226. Regulatory Guide 1.8, "Qualification and Training of Personnel for Nuclear Power Plants," U.S. Nuclear Regulatory Commission, March 1971, (Rev. 1) September 1975 [8801130111], (Rev. 1-R) May 1977 [7907100073], (Rev. 2) April 1987 [8907180147].

227. NUREG/CR-0130, "Technology, Safety, and Costs of Decommissioning a Reference Pressurized Water Reactor Power Station," U.S. Nuclear Regulatory Commission, June 1978.

228. SECY-81-450, "Development of a Selective Absorption System Emergency Unit," July 27, 1981. [8108140094]

229. Memorandum for T. Speis from R. Houston, "Containment Venting and Purging - Completion of TMI Action Plan Item II.E.4.4(4)," March 3, 1982. [8401170023, 8203240149]

230. Memorandum for R. Mattson from T. Speis, "Containment Purge and Venting -Completion of TMI Action Plan Item II.E.4.4(5)," April 9, 1982. [8204260021]

231. Memorandum for W. Dircks from R. Mattson, "Status Report on Containment Purge Evaluations," May 13, 1982. [8401170021]

232. SECY-81-168B, "Response to Commission Request for Information on Financial Considerations in Licensing Proceedings," July 13, 1981. [8107310227]

233. Regulatory Guide 1.26, "Quality Group Classifications and Standards for Water-, Steam-, and Radioactive-Waste-Containing Components of Nuclear Power Plants," U.S. Nuclear Regulatory Commission, March 1972, (Rev. 1) September 1974, (Rev. 2) June 1975, (Rev. 3) February 1976.

234. Federal Register Notice 47 FR 9987, "10 CFR Part 2, General Statement of Policy and Procedure for Enforcement Actions," March 9, 1982.

235. Memorandum for H. Denton from R. DeYoung, "TMI Action Plan Items Still Pending," June 10, 1982. [8401170101]

236. Memorandum for W. Dircks from R. DeYoung, "TMI Action Plan - Completed Items," June 30, 1982. [8208110023]

237. SECY-80-366, "NRC Legislative Program for 97th Congress," August 6, 1980. [8101050634]

238. Memorandum for Chairman Hendrie, et al., from W. Dircks, "Memorandum of Agreement with INPO and NSAC on a Cooperative Relationship for the Collection and Feedback of Operational Data," June 16, 1981. [8106260511, 8106260514]

239. Memorandum for W. Dircks from V. Stello, "TMI Action Plan - Status Report," December 19, 1980. [8205260193]

240. SECY-81-153, "Nuclear Data Link," March 11, 1981. [8103240155]

241. NUREG/CR-1440, "Light Water Reactor Status Monitoring During Accident Conditions," U.S. Nuclear Regulatory Commission, May 1980.

242. NUREG/CR-2100, "Boiling Water Reactor Status Monitoring During Accident Conditions," U.S. Nuclear Regulatory Commission, May 1981.

243. NUREG/CR-2278, "Light Water Reactor Engineered Safety Features Status Monitoring," U.S. Nuclear Regulatory Commisson, October 1981.

244. NUREG/CR-2147, "Nuclear Control Room Annunciators," U.S. Nuclear Regulatory Commission, October 1981.

245. Memorandum for H. Denton, et al., from R. Minogue, "Research Information Letter #RIL-124, 'Control Room Alarms and Annunciators,'" October 20, 1981. [8111130045]

246. RIL-98, "Light Water Reactor Status Monitoring During Accident Conditions," U.S. Nuclear Regulatory Commission, August 18, 1980. [8104230867]

247. NUREG/CR-5669, "Evaluation of Exposure Limits to Toxic Gases for Nuclear Reactor Control Room Operators," U.S. Nuclear Regulatory Commission, July 1991.

248. Memorandum for W. Dircks from R. DeYoung, "TMI Action Plan - Completed Items," December 28, 1981. [8205260197]

249. NUREG/CR-6210, "Computer Codes for Evaluation of Control Room Habitability (HABIT)," U.S. Nuclear Regulatory Commission, June 1996.

250. SECY-81-440, "Nuclear Power Plant Staff Working Hours," July 22, 1981. [8107290183]

251. SECY-79-330E, "Qualifications of Reactor Operators," July 30, 1979. [7910020256, 7910020279]

252. NRR-80-117, "Study of Requirements for Operator Licensing," February 4, 1982. [8203180234]

253. ANSI/ANS 3.1, "Selection, Qualification, and Training of Personnel for Nuclear Power Plants," American National Standards Institute, 1981.

254. Letter to N. Palladino (NRC) from M. Udall (Chairman, Committee on Interior and Insular Affairs, U.S. House of Representatives), June 4, 1982. [8207120246]

255. Letter to M. Udall (Chairman, Committee on Interior and Insular Affairs, U.S. House of Representatives) from N. Palladino (NRC), June 30, 1982. [8206130067]

256. Memorandum for W. Dircks from R. DeYoung, "TMI Action Plan - Completed Items," June 2, 1982. [8401170114]

257. NUREG-0728, "Report to Congress - NRC Incident Response Plan," U.S. Nuclear Regulatory Commission, September 1980.

258. NUREG-0845, "Agency Procedure for the NRC Incident Response Plan," U.S. Nuclear Regulatory Commission, March 1982.

259. Memorandum for J. Sniezek from J. Taylor, "TMI Action Plan Item II.J.1.2, Modification of Vendor Inspection Program," October 13, 1982. [8301050485]

260. SECY-81-494, "Integrated Operational Experience Reporting System," August 18, 1981. [8109110483]

261. Federal Register Notice 46 FR 53594, "NRC Regulatory Agenda," October 29, 1981.

262. BNL/NUREG-28955, "PWR Training Simulator and Evaluation of the Thermal-Hydraulic Models for Its Main Steam Supply System," Brookhaven National Laboratory, 1981.

263. BNL/NUREG-29815, "BWR Training Simulator and Evaluation of the Thermal-Hydraulic Models for Its Main Steam Supply System," Brookhaven National Laboratory, 1981.

264. BNL/NUREG-30602, "A PWR Training Simulator Comparison with RETRAN for a Reactor Trip from Full Power," Brookhaven National Laboratory, 1981.

265. Memorandum for the Commissioners from W. Dircks, "Enforcement Policy," March 18, 1980. [8005160508]

266. SECY-80-139A, "NRC Enforcement Program," August 27, 1980. [8009180277]

267. Memorandum for R. Purple from R. Minogue, "TMI Action Plan," October 24, 1980. [8011120511]

268. Memorandum for W. Dircks from V. Stello, "Assignment of Resident Inspectors to Nuclear Steam System Suppliers and Architect-Engineers," September 14, 1981. [8111030559]

269. IE Circular No. 80-15, "Loss of Reactor Coolant Pump Cooling and Natural Circulation Cooldown," U.S. Nuclear Regulatory Commission, June 20, 1980. [8005050073]

270. Memorandum for C. Michelson from H. Denton, "Report on St. Lucie Natural Circulation Cooldown," April 6, 1981. [8104150248]

271. Memorandum for J. Taylor from E. Beckjord, "Closeout of TMI Action Plan Task I.D.5(5), Research on Disturbance Analysis Systems," April 17, 1995. [9705190216]

272. Memorandum for J. Gagliardo from D. Eisenhut, "Potential Failure of Turbine Driven Auxiliary Feedwater Pump Steam Supply Line - Fort Calhoun," October 8, 1982. [8210290122]

273. Memorandum for H. Denton from C. Michelson, "Technical Review Report, Postulated Loss of Auxiliary Feedwater System Resulting from Turbine Driven Auxiliary Feedwater Pump Steam Supply Line Rupture," February 16, 1983. [8303040296]

274. Letter to G. Knighton (NRC) from K. Baskin (Southern California Edison Company), "Docket Nos. 50-361 and 50-362, San Onofre Nuclear Generating Station Units 2 and 3," October 29, 1982. [8211020483]

275. NUREG/CR-1614, "Approaches to Acceptable Risk: A Critical Guide," U.S. Nuclear Regulatory Commission, September 1980.

276. NUREG/CR-1539, "A Methodology and a Preliminary Data Base for Examining the Health Risks of Electricity Generation from Uranium and Coal Fuels," U.S. Nuclear Regulatory Commission, August 1980.

277. NUREG/CR-1930, "Index of Risk Exposure and Risk Acceptance Criteria," U.S. Nuclear Regulatory Commission, February 1981.

278. NUREG/CR-1916, "A Risk Comparison," U.S. Nuclear Regulatory Commission, February 1981.

279. NUREG/CR-2040, "A Study of the Implications of Applying Quantitative Risk Criteria in the Licensing of Nuclear Power Plants in the U.S.," U.S. Nuclear Regulatory Commission, March 1981.

280. SECY-80-331, "NRC Training Program," July 14, 1980. [8009100166]

281. Memorandum for H. Denton, et al., from C. Michelson, "Case Study Report - Failure of Class 1E Safety-Related Switchgear Circuit Breakers to Close on Demand," August 4, 1982. [8208240007]

282. Memorandum for C. Michelson from H. Denton, "AEOD Preliminary Report on Failures of Class 1E Safety-Related Switchgear Circuit Breakers to Close on Demand," September 23, 1982. [8210290150]

283. Federal Register Notice 47 FR 36099, "Executive Order 12379 of August 17, 1982, Termination of Boards, Committees, and Commissions," August 19, 1982.

284. Letter to N. Palladino (NRC) from G. Keyworth (OSTP), July 21, 1982. [9705190213]

285. Letter to G. Keyworth (OSTP) from N. Palladino (NRC), July 23, 1982. [9705190203]

286. Letter to T. Pestorius (OSTP) from R. Minogue (NRC), August 27, 1982. [9104170201]

287. SECY-81-600A, "Revised General Statement of Policy and Procedure for Enforcement Actions," December 14, 1981. [8201190600]

288. NEDO-10174, "Consequences of a Postulated Flow Blockage Incident in a Boiling Water Reactor," General Electric Company, October 1977, (Rev. 1) May 1980.

289. NUREG/CR-2075, "Standards for Psychological Assessment of Nuclear Facility Personnel," U.S. Nuclear Regulatory Commission, July 1981.

290. NUREG/CR-2076, "Behavioral Reliability Program for the Nuclear Industry," U.S. Nuclear Regulatory Commission, July 1981.

291. Memorandum for E. Jordan, et al., from R. Bernero, "Proposed Rule Review Request - 10 CFR Part 21, 'Reporting of Defects and Noncompliance,'" September 28, 1982. [8210150634]

292. Memorandum for R. Minogue from R. DeYoung, "Proposed Rule Amending 10 CFR Parts 50.55(e) and 21: RES Task Numbers RA 128-1 and RA 808-1," July 13, 1982.

293. Federal Register Notice 47 FR 18508, "NRC Regulatory Agenda," April 29, 1982.

294. Federal Register Notice 47 FR 48960, "NRC Regulatory Agenda," October 28, 1982.

295. BNL-NUREG-31940, "Postulated SRV Line Break in the Wetwell Airspace of Mark I and Mark II Containments - A Risk Assessment," Brookhaven National Laboratory, October 1982. [8212070471]

296. Letter to T. Kress from J. Taylor, "Resolution of Generic Safety Issue 83, 'Control Room Habitability,'" September 13,1995. [9605130222, 9605150092]

297. Memorandum for W. Dircks from R. DeYoung, "TMI Action Plan - Completed Item," October 29, 1982. [8401170104]

298. Memorandum for W. Dircks from V. Stello, "TMI Action Plan - Status Report," April 17, 1981. [8205260194]

299. NUREG/CR-1482, "Nuclear Power Plant Simulators: Their Use in Operator Training and Requalification," U.S. Nuclear Regulatory Commission, August 1980.

300. NUREG/CR-2353, "Specification and Verification of Nuclear Power Plant Training Simulator Response Characteristics," U.S. Nuclear Regulatory Commission, (Vol. 1) January 1982, (Vol. 2) May 1982.

301. Memorandum for R. Emrit from P. Goldman, "Draft Report on the Prioritization of Non-NRR TMI Action Plan Items," December 29, 1982. [8312290171]

302. Memorandum for H. Denton from C. Michelson, "Operational Restrictions for Class IE 120 VAC Vital Instrument Buses," July 15, 1980. [8210120114]

303. Memorandum for C. Michelson from H. Denton, "LCO for Class IE Vital Instrument Buses in Operating Reactors," September 29, 1980. [8010220035]

304. UCID-19469, "120 VAC Vital Instrument Buses and Inverter Technical Specifications," Lawrence Livermore National Laboratory, October 28, 1982. [8405180177]

305. Memorandum to Distribution from J. Davis, "NMSS Procedure for Review of Routine Inspection Operational Data and Licensee Event Reports," March 9, 1982. [8312290164]

306. IEEE Catalog No. TH0073-7, "Record of the Working Conference on Advanced Electrotechnology Applications to Nuclear Power Plants, January 15-17, 1980, Washington, D.C.," The Institute of Electrical and Electronics Engineers, Inc.

307. EPRI NP-2230, "ATWS: A Reappraisal, Part 3," Electric Power Research Institute, 1982.

308. SECY-82-352, "Assurance of Quality," August 20, 1982. [8209160068]

309. SECY-82-1, "Severe Accident Rulemaking and Related Matters," January 4, 1982. [8201190416]

310. Memorandum for W. Dircks from S. Chilk, "Staff Requirements - Briefing on Status and Plan for Severe Accident Rulemaking (SECY-82-1)," January 29, 1982. [8202160202]

311. SECY-82-1A, "Proposed Commission Policy Statement on Severe Accidents and Related Views on Nuclear Reactor Regulation," July 16, 1982. [8208040432]

312. NUREG/CR-0165, "A Value-Impact Assessment of Alternate Containment Concepts," U.S. Nuclear Regulatory Commission, June 1978.

313. NUREG/CR-2063, "Effects of the Accident of Three Mile Island on Property Values and Sales," U.S. Nuclear Regulatory Commission, March 1981.

314. NUREG/CR-2749, "Socioeconomic Impacts of Nuclear Generating Stations - Three Mile Island Case Study," U.S. Nuclear Regulatory Commission, (Vol. 12) July 1982.

315. Memorandum of Understanding Between the Federal Emergency Management Agency and the Nuclear Regulatory Commission, "Incident Response," October 22, 1980. [8011170793]

316. Memorandum of Understanding Between the Nuclear Regulatory Commission and the Federal Emergency Management Agency, "Radiological Emergency Planning and Preparedness," November 4, 1980. [8012110538]

317. Memorandum for G. Lainas from F. Miraglia, "CRGR Package for MPA B-71, 120 VAC Vital Instrument Buses and Inverter Technical Specifications," November 23, 1982. [8212160596]

318. Memorandum for H. Denton, et al., from C. Michelson, "An Analysis of the Abnormal Transient Operating Guidelines (ATOG) as Applied to the April 1981 Overfill Event at Arkansas Nuclear One - Unit 1," April 9, 1982. [8204220005]

319. Memorandum for C. Michelson from D. Eisenhut, "Review of Abnormal Transient Operating Guidelines (ATOG) as Applied to the April 8, 1981 Overfill Event at Arkansas Nuclear One - Unit 1," July 30, 1982. [8208180173]

320. Memorandum for C. Michelson from H. Denton, "Review of the Case Study of the Abnormal Transient Operating Guidelines (ATOG) as Applied to the April 1981 Overfill Event at Arkansas Nuclear One - Unit 1," October 7, 1982. [8211030575]

321. Memorandum for Commissioner Ahearne from W. Dircks, "AEOD Report on Arkansas Unit 1 Overfill Event," November 1, 1982. [8211190330]

322. AEOD/C201, "Report on The Safety Concern Associated with Reactor Vessel Level Instrumentation in Boiling Water Reactors," Office for Analysis and Evaluation of Operational Data, U.S. Nuclear Regulatory Commission, January 1982. [8202180432]

323. Memorandum for C. Michelson from H. Denton, "AEOD January 1982 Report on Safety Concern Associated with Reactor Vessel Level Instrumentation in Boiling Water Reactors," March 19, 1982. [8204190068]

324. NUREG-0785, "Safety Concerns Associated with Pipe Breaks in the BWR Scram System," U.S. Nuclear Regulatory Commission, April 1981.

325. NRC Letter to All BWR Licensees, "Safety Concerns Associated with Pipe Breaks in the BWR Scram System (Generic Letter 81-20)," April 10, 1981. [8112170367]

326. NEDO-24342, "GE Evaluation in Response to NRC Request Regarding BWR Scram System Pipe Breaks," General Electric Company, April 1981. [8105070251]

327. Letter to D. Eisenhut (NRC) from G. Sherwood (GE), "NRC Report, 'Safety Concerns Associated with Pipe Breaks in the BWR Scram System,'" April 30, 1981. [8105070249]

328. NUREG-0803, "Generic Safety Evaluation Report Regarding Integrity of BWR Scram System Piping," U.S. Nuclear Regulatory Commission, August 1981.

329. NRC Letter to All GE BWR Licensees (Except Humboldt Bay), "Safety Concerns Associated with Pipe Breaks in the BWR Scram System (Generic Letter 81-34)," August 31, 1981. [8110150121]

330. AEOD/C003, "Report on Loss of Offsite Power Event at Arkansas Nuclear One, Units 1 and 2, on April 7, 1980," Office for Analysis and Evaluation of Operational Data, U.S. Nuclear Regulatory Commission, October 15, 1980. [8011170099]

331. Memorandum for C. Michelson from H. Denton, "NRR Responses to AEOD Recommendations on the Arkansas Loss of Offsite Power Event of April 7, 1980," February 13, 1981. [8102270127]

332. NRC Letter to All BWR Applicants for CPs, Holders of CPs, and Applicants for OLs, "Safety Concerns Associated with Pipe Breaks in the BWR Scram System (Generic Letter 81-35)," August 31, 1981. [8112170388]

333. SECY-82-445, "Proposal to Assign Two Resident Inspectors to Each Reactor Construction Site," November 1, 1982. [8211190003]

334. SECY-82-478, "Resident Inspection Program," December 6, 1982. [8401250359]

335. Memorandum for J. Taylor from D. Morrison, "Resolution of Generic Safety Issue 83, 'Control Room Habitability,'" June 17, 1996. [9607250277]

336. NUREG-0834, "NRC Licensee Assessments," U.S. Nuclear Regulatory Commission, August 1981.

337. NUREG/CR-2672, "SBLOCA Outside Containment at Browns Ferry Unit One - Accident Sequence Analysis," U.S. Nuclear Regulatory Commission, November 1982.

338. NUREG/CR-2744, "Human Reliability Data Bank for Nuclear Power Plant Operations," U.S. Nuclear Regulatory Commission, November 1982.

339. NUREG/CR-1278, "Handbook of Human Reliability Analysis with Emphasis on Nuclear Power Plant Applications," U.S. Nuclear Regulatory Commission, October 1983.

340. Memorandum for H. Denton from J. Fouchard, "Draft Report on the Prioritization of Non-NRR TMI Action Plan Items," January 17, 1983. [8302030055]

341. NUREG/CR-2255, "Expert Estimation of Human Error Probabilities in Nuclear Power Plant Operations: A Review of Probability Assessment and Scaling," U.S. Nuclear Regulatory Commission, May 1982.

342. NUREG/CR-2743, "Procedures for Using Expert Judgment to Estimate Human Error Probabilities in Nuclear Power Plant Operations," U.S. Nuclear Regulatory Commission, February 1983.

343. NUREG/CR-2254, "Workbook for Conducting Human Reliability Analysis," U.S. Nuclear Regulatory Commission, February 1983.

344. NUREG/CR-1205, "Data Summaries of Licensee Event Reports of Pumps at U.S. Commercial Nuclear Power Plants," U.S. Nuclear Regulatory Commission, January 1980, (Rev. 1) January 1982.

345. Memorandum for R. Vollmer from T. Murley, "Prioritization of New Requirements for PWR Feedwater Line Cracks," July 21, 1981. [8108180001]

346. NUREG/CR-1363, "Data Summaries of Licensee Event Reports of Valves at U.S. Commercial Nuclear Power Plants," U.S. Nuclear Regulatory Commission, June 1980, (Rev. 1) October 1982.

347. NUREG/CR-6316, "Guidelines for the Verification and Validation of Expert System Software and Conventional Software," U.S. Nuclear Regulatory Commission, (Vols. 1, 2, 3, 4, 5, 6, 7, and 8) March 1995.

348. NUREG/CR-1362, "Data Summaries of Licensee Event Reports of Diesel Generators at U.S. Commercial Nuclear Power Plants, January 1, 1976 through December 31, 1978," U.S. Nuclear Regulatory Commission, March 1980.

349. NUREG/CR-1331, "Data Summaries of Licensee Event Reports of Control Rods and Drive Mechanisms at U.S. Commercial Nuclear Power Plants, January 1, 1972 through April 30, 1978," U.S. Nuclear Regulatory Commission, February 1980.

350. NUREG/CR-1730, "Data Summaries of Licensee Event Reports of Primary Containment Penetrations at U.S. Commercial Nuclear Power Plants, January 1, 1972 through December 31, 1978," U.S. Nuclear Regulatory Commission, September 1980.

351. NUREG/CR-1740, "Data Summaries of Licensee Event Reports of Selected Instrumentation and Control Components at U.S. Commercial Nuclear Power Plants from January 1, 1976 to December 31, 1978," U.S. Nuclear Regulatory Commission, May 1981.

352. Memorandum for C. Michelson from E. Brown, "Internal Appurtenances in LWRs," December 24, 1980. [8101150319]

353. NUREG/CR-2641, "The In-Plant Reliability Data Base for Nuclear Power Plant Components: Data Collection and Methodology Report," U.S. Nuclear Regulatory Commission, July 1982.

354. NUREG/CR-2886, "The In-Plant Reliability Data Base for Nuclear Power Plant Components: Interim Data Report - The Pump Component," U.S. Nuclear Regulatory Commission, January 1983.

355. EGG-EA-5502, "User's Guide to BFR, A Computer Code Based on the Binomial Failure Rate Common Cause Model," EG&G, Inc., July 1982.

356. EGG-EA-5623, "Common Cause Fault Rates for Instrumentation and Control Assemblies: Estimates Based on Licensee Event Reports at U.S. Commercial Nuclear Power Plants, 1976-1978," EG&G, Inc., (Rev. 1) September 1982.

357. EGG-EA-5485, "Common Cause Fault Rates for Valves: Estimates Based on Licensee Event Reports at U.S. Commercial Nuclear Power Plants, 1976-1980," EG&G, Inc., (Rev. 1) September 1982.

358. NUREG/CR-2099, "Common Cause Fault Rates for Diesel Generators: Estimates Based on Licensee Event Reports at U.S. Commercial Nuclear Power Plants, 1976-1978," U.S. Nuclear Regulatory Commission, (Rev. 1) June 1982.

359. NUREG/CR-1401, "Estimators for the Binomial Failure Rate Common Cause Model," U.S. Nuclear Regulatory Commission, April 1980.

360. EGG-EA-5289, "Common Cause Fault Rates for Pumps: Estimates Based on Licensee Event Reports at U.S. Commercial Nuclear Power Plants, January 1, 1972 through September 30, 1980," EG&G, Inc., (Rev. 1) August 1982.

361. JBFA-101-82, "Common Cause Screening Methodology Project (FY 81 Technical Progress Report)," JBF Associates, Inc., February 1982.

362. NUREG/CR-2542, "Sensitivity Study Using the FRANTIC II Code for the Unavailability of a System to the Failure Characteristics of the Components and the Operating Conditions," U.S. Nuclear Regulatory Commission, February 1982.

363. NUREG/CR-2332, "Time Dependent Unavailability of a Continuously Monitored Component," U.S. Nuclear Regulatory Commission, August 1981.

364. Memorandum for W. Dircks from S. Chilk, "Systematic Assessment of Licensee Performance," October 20, 1981. [8210080207]

365. NUREG/CR-2515, "Crystal River 3 Safety Study," U.S. Nuclear Regulatory Commission, December 1981.

366. NUREG/CR-2787, "Interim Reliability Evaluation Program: Analysis of the Arkansas Nuclear One - Unit One Nuclear Power Plant," U.S. Nuclear Regulatory Commission, June 1982.

367. NUREG/CR-2802, "Interim Reliability Evaluation Program: Analysis of the Browns Ferry Unit 1 Nuclear Plant," U.S. Nuclear Regulatory Commission, August 1982, (Appendix A) August 1982, (Appendix B) August 1982, (Appendix C) August 1982.

368. Memorandum for ACRS Members from C. Michelson, "Failure of a Feedwater Flow Straightener at San Onofre Nuclear Station, Unit 1," June 13, 1979. [7910180473]

369. SECY-82-396A, "Withdrawal of SECY-82-396 (Federal Policy Statement on Use of Potassium Iodide)," October 15, 1982. [8211040047]

370. SECY-81-676, "Delegation of Rulemaking Authority to the EDO," December 3, 1981. [8201110403]

371. SECY-82-187, "Revised Guidelines for Value-Impact Analyses," May 7, 1982. [8205130275]

372. SECY-82-447, "Draft Report of the Regulatory Reform Task Force," November 3, 1982. [8211160547]

373. NUREG-0499, "Preliminary Statement on General Policy for Rulemaking to Improve Nuclear Power Plant Licensing," U.S. Nuclear Regulatory Commission, December 1978.

374. Memorandum for J. Hendrie from L. Bickwit, "Review of Commission Delegation of Authority," October 4, 1979. [8001150518]

375. Memorandum for R. Minogue from R. Bernero, "Charter of the Regulatory Analysis Branch," October 9, 1981. [8110280720]

376. NRC Letter to All Licensees of Operating Reactors, Applicants for Operating Licenses, and Holders of Construction Permits, "Supplement 1 to NUREG-0737, Requirements for Emergency Response Capability (Generic Letter No. 82-33)," December 17, 1982. [8212060349]

377. Memorandum for W. Minners from B. Snyder, "Schedule for Resolving and Completing Generic Issues," December 16, 1982. [8312290162]

378. Memorandum for S. Boyd from M. Srinivasan, "FY 1983-FY 1984 Office of Nuclear Reactor Regulation Operating Plan," November 17, 1982. [8301100332]

379. Memorandum for H. Denton from R. DeYoung, "Draft Report on the Prioritization of Non-NRR TMI Action Plan Items," January 24, 1983. [8401160474]

380. SECY-93-049, "Implementation of 10 CFR Part 54, 'Requirements for Renewal of Operating Licenses for Nuclear Power Plants,'" March 1, 1993. [9303030337, 9303100375].

381. Memorandum for W. Minners from O. Parr, "Prioritization of Proposed Generic Issue on CRD Accumulator Check Valve Leakage," August 13, 1984. [8408280264]

382. Memorandum for W. Minners from R. Mattson, "Schedules for Resolving and Completing Generic Issues," January 21, 1983. [8301260532]

383. Memorandum for W. Dircks from R. Mattson, "Closeout of TMI Action Plan I.C.1(4), Confirmatory Analyses of Selected Transients," November 12, 1982. [8212080586]

384. Memorandum for T. Speis from R. Vollmer, "Schedules for Resolving and Completing Generic Issues," February 1, 1983. [8401170076]

385. Memorandum for T. Murley from D. Ross, "Use of Equipment Not Classified as Essential to Safety in BWR Transient Analysis," March 10, 1981. [8103240798, 9804090138]

386. Memorandum for T. Novak from R. Frahm, "Summary of Meeting with General Electric on the Use of Non-Safety Grade Equipment," March 7, 1979. [7903220463]

387. NUREG-0410, "NRC Program for the Resolution of Generic Issues Related to Nuclear Power Plants," U.S. Nuclear Regulatory Commission, January 1978.

388. NUREG-0577, "Potential for Low Fracture Toughness and Lamellar Tearing in PWR Steam Generator and Reactor Coolant Pump Supports," U.S. Nuclear Regulatory Commission, (Rev. 1) October 1983.

389. "Indian Point Probabilistic Safety Study," Power Authority of the State of New York and Consolidated Edison Company of New York, Inc., 1982.

390. NUREG-0850, "Preliminary Assessment of Core Melt Accidents at the Zion and Indian Point Nuclear Power Plants and Strategies for Mitigating Their Effects," U.S. Nuclear Regulatory Commission, November 1981.

391. Memorandum for E. Reeves from J. Knight, "Zion Liquid Pathway Analysis," August 8, 1980. [8008210647]

392. Memorandum for J. Funches from R. Mattson, "Request for Approval to Work on Low Priority Generic Safety Issues," November 5, 1982. [8211160524]

393. "TMI-2 Recovery Program Estimate," General Public Utilities Corp., (Rev. 1) July 1981.

394. Memorandum for S. Hanauer, et al., from D. Eisenhut, "Operating Reactor Event Memorandum No. 81-31: Loss of Direct Current (DC) Bus at Millstone Unit 2," March 31, 1981. [8104100493]

395. Memorandum for H. Denton from C. Michelson, "Millstone Unit 2 - Reactor Trip Following De-Energization of a 125 V DC Bus," November 5, 1981. [8112010276]

396. Memorandum for C. Michelson from H. Denton, "AEOD November 1981 Report on the Millstone Unit 2 Loss of 125 V DC Bus Event," January 4, 1982. [8202040017]

397. IEEE Std 279, "Criteria for Protection Systems for Nuclear Power Generating Stations (ANSI N42.7-1972)," The Institute of Electrical and Electronics Engineers, Inc., 1971.

398. Memorandum for R. Tedesco from T. Speis, "Identification of Protection System Instrument Sensing Lines," April 29, 1982. [8205270511]

399. Memorandum to C. Rossi from A. Thadani, "Prioritization of and Transfer of Responsibility for Generic Safety Issue 156.6.1, 'Pipe Break Effects on Systems and Components Inside Containment,'" July 16, 1999. [9908300234]

400. Memorandum for V. Stello from H. Denton, "Standard Review Plan Guidance for Identification of Protection System Instrument Lines," December 29, 1982. [8301070067]

401. Memorandum for H. Denton from V. Stello, "Proposed Standard Review Plan Guidance for Identification of Protection System Instrument Lines," January 27, 1983. [8302180526]

402. Letter to D. Eisenhut (NRC) from T. Dente (BWR Owners' Group), "Analysis of Scram Discharge Volume System Piping Integrity, NEDO-22209 (Prepublication Form)," August 23, 1982. [8208310340]

403. Letter to K. Eccleston (NRC) from T. Dente (BWR Owners' Group), "Transmittal of Supporting Information on Application of Scram Time Fraction to Scram Discharge Volume (SDV) Pipe Break Probability as Used in NEDO-22209," January 28, 1983. [8302010525]

404. Letter to S. Israel (NRC) from J. Hickman (SNL), "Review and Evaluation of the Indian Point Probabilistic Safety Study," August 25, 1982. [8209230166]

405. Memorandum for W. Minners from A. Thadani, et al., "Probability of Core Melt Due to Component Cooling Water System Failures," January 19, 1983. [8301270522]

406. Memorandum for W. Dircks from R. DeYoung, "TMI Action Plan - Status Report," March 4, 1982. [8204290601]

407. Memorandum for W. Dircks from R. DeYoung, "TMI Action Plan - Completed Item," May 11, 1982. [8401170108]

408. NUREG-1509, "Radiation Effects on Reactor Pressure Vessel Supports," U.S. Nuclear Regulatory Commission, May 1996.

409. Memorandum for W. Minners from W. Mills, "Prioritization of Generic Issue III.D.3.5, Radiation Worker Data Base," February 22, 1983. [9705190229]

410. Memorandum for T. Speis from R. Browning, "Draft Report on the Prioritization of Non-NRR TMI Action Plan Items," April 1, 1983. [8304200629, 9705190233]

411. SLI-8211, "Review of BWR Reactor Vessel Water Level Measurement Systems," S. Levy, Inc., July 1982.

412. Memorandum for T. Speis from J. Funches, "Prioritization of Generic Issues - Environmental and Licensing Improvements," February 24, 1983. [8303090540]

413. Memorandum for D. Eisenhut from E. Jordan, "Main Steam Isolation Valve (MSIV) Survey," July 1, 1982. [8209240107]

414. Memorandum for W. Minners from L. Hulman, "Consequence Analyses for BWR Main Steam System Leakage Pathway Generic Issue Evaluation," December 9, 1982. [8301050058]

415. Memorandum for W. Minners from L. Hulman, "MSIV Leakage Consequences," December 23, 1982. [8312290172]

416. NUREG/CR-1908, "Criteria for Safety-Related Nuclear Power Plant Operator Actions: Initial Pressurized Water Reactor (PWR) Simulator Exercises," U.S. Nuclear Regulatory Commission, September 1981.

417. NUREG/CR-2598, "Nuclear Power Plant Control Room Task Analysis: Pilot Study for Pressurized Water Reactors," U.S. Nuclear Regulatory Commission, July 1982.

418. NUREG/CR-2534, "Criteria for Safety-Related Nuclear Power Plant Operator Actions: Initial Boiling Water Reactor (BWR) Simulated Exercises," U.S. Nuclear Regulatory Commission, November 1982.

419. NUREG/CR-3092, "Criteria for Safety-Related Nuclear Power Plant Operator Actions: Initial Simulator to Field Data Calibration," U.S. Nuclear Regulatory Commission, February 1983.

420. IE Bulletin No. 80-14, "Degradation of BWR Scram Discharge Volume Capability," U.S. Nuclear Regulatory Commission, June 12, 1980. [8005050056]

421. IE Bulletin No. 80-17, "Failure of 76 of 185 Control Rods to Fully Insert During Scram at BWR," U.S. Nuclear Regulatory Commission, July 3, 1980. [8005050076]

422. NRC Letter to All BWR Licensees, "BWR Scram Discharge System," December 9, 1980. [8102190299]

423. Memorandum for R. Mattson from D. Eisenhut, "Status of Long-Term Followup of the Indian Point Unit 2 Flooding Event," May 13, 1982. [8205240153]

424. Memorandum for F. Schroeder from T. Speis, "Designation of Inadvertent Containment Flooding as a Generic Issue," August 5, 1982. [8208120379]

425. "Zion Probabilistic Safety Study," Commonwealth Edison Company, 1981.

426. Memorandum for T. Novak from G. Lainas and V. Noonan, "NRR Input to SER on 'Indian Point Unit No. 2 Flood in Containment Due to Containment Cooler Service Water Leaks on 10/17/80,'" April 3, 1981. [8104090906]

427. Memorandum for T. Speis from R. Mattson, "Close-out of TAP-A-16, Steam Effects on BWR Core Spray Distribution (TACS-40066)," March 29, 1983. [8304130488]

428. Memorandum for W. Minners from P. Hayes, "Generic Safety Issue No. 51, Improved Reliability of Open Service Water Systems," April 5, 1983. [9705190249]

429. Memorandum for J. Knight from E. Sullivan, "Review ACRS Consultant Report," January 10, 1980. [8105150033]

430. Memorandum for K. Seyfrit from E. Imbro, "Flow Blockage in Essential Raw Cooling Water System Due to Asiatic Clam Intrusion," March 28, 1983. [8305230539]

431. EPRI NP-1138, "Limiting Factor Analysis of High-Availability Nuclear Plants," Electric Power Research Institute, September 1979.

432. SECY-82-296, "Resolution of AEOD Combination LOCA Concern," July 13, 1982. [8207230202]

433. Memorandum for C. Michelson from E. Brown, "Degradation of Internal Appurtenances and/or Loose Parts in LWRs," June 15, 1982. [8207280317]

434. Memorandum for H. Denton, et al., from C. Michelson, "Flow Blockage in Essential Equipment at ANO Caused by Corbicula sp. (Asiatic Clams)," October 21, 1980. [8011060029]

435. Letter to N. Palladino from P. Shewmon, "Control Room Habitability," August 18, 1982. [8207180073]

436. Letter to J. Ray from W. Dircks, "August 18, 1982, ACRS Letter on Control Room Habitability," January 31, 1983. [8302100196]

437. Memorandum for H. Denton from R. Minogue, "Draft Report on the Prioritization of Non-NRR TMI Action Plan Items," March 29, 1983. [8401160475]

438. Memorandum for G. Cunningham, et al., from W. Dircks, "NRC Actions Required by Enactment of the Nuclear Waste Policy Act of 1982," January 19, 1983. [8507110762]

439. Regulatory Guide 1.149, "Nuclear Power Plant Simulators for Use in Operator Training," U.S. Nuclear Regulatory Commission, April 1981 [8105220400], (Rev. 1) April 1987 [8704300503, 8601160291], (Rev. 2) April 1996 [9604170117].

440. Memorandum for W. Minners from D. Ziemann, "Schedules for Resolving and Completing Generic Issues," April 5, 1983. [8304180758]

441. Memorandum for H. Denton from R. DeYoung, "Commission Paper on the Prioritization of Generic Safety Issues," April 20, 1983. [9705190224]

442. Memorandum for R. Emrit from T. Rothschild, "Establishing Priorities for Generic Safety Issues," April 21, 1983. [8312290167]

443. Memorandum for W. Dircks from R. Mattson, "Closeout of NUREG-0660 Item II.E.5.1, Design Sensitivity of B&W Plants for Operating Plants," March 15, 1983. [8304080415]

444. "Letter to Public Service Electric and Gas Company from D. Fischer (NRC) 'Meeting Summary - Salem Unit - 1 Failure of Reactor Trip Breakers,'" March 14, 1983. [8303210160]

445. NUREG-1000, "Generic Implications of ATWS Events at the Salem Nuclear Power Plant," U.S. Nuclear Regulatory Commission, (Vol. 1) April 1983, (Vol. 2) August 1983.

446. Memorandum for Chairman Ahearne from C. Michelson, "New Unresolved Safety Issues," August 4, 1980. [8010240206]

447. NUREG-0977, "NRC Fact Finding Task Force Report on the ATWS Events at Salem Nuclear Generating Station Unit 1 on February 22 and 25, 1983," U.S. Nuclear Regulatory Commission, March 1983.

448. Memorandum for F. Rowsome from S. Bryan, "Reliability Assurance - Reactor Protection System," July 23, 1981. [8109100509]

449. Memorandum for S. Hanauer from D. Eisenhut, "Potential Generic Issue: BWR Control Rod Test Requirements Following Maintenance," November 26, 1982. [8212160790]

450. Memorandum for R. Mattson from T. Speis, "Potential Generic Issues Related to Scram Systems," April 7, 1983. [8304200351]

451. Memorandum for H. Denton from C. Heltemes, "Potential Design Deficiency in Westinghouse Reactor Protection System," March 10, 1983. [8303230335]

452. Memorandum for C. Heltemes from H. Denton, "Westinghouse Reactor Protection System Design Conformance to IEEE Standard 279," May 2, 1983. [8305180398]

453. Memorandum for H. Denton, et al., from R. Mattson, "Recommended Generic Actions," April 27, 1983. [8305250017]

454. SECY-83-98E, "Salem Restart Evaluation," April 11, 1983. [8304220308]

455. NUREG-0771, "Regulatory Impact of Nuclear Reactor Accident Source Term Assumptions," U.S. Nuclear Regulatory Commission, June 1981.

456. WASH-1248, "Environmental Survey of the Uranium Fuel Cycle," U.S. Atomic Energy Commission, April 1974.

457. NUREG-0116, "Environmental Survey of the Reprocessing and Waste Management Portions of the LWR Fuel Cycle," U.S. Nuclear Regulatory Commission, October 1976.

458. NUREG-0216, "Public Comments on the Environmental Survey of the Reprocessing and Waste Management Portions of the LWR Fuel Cycle," U.S. Nuclear Regulatory Commission, March 1977.

459. NUREG-0252, "The Environmental Effects of Using Coal for Generating Electricity," U.S. Nuclear Regulatory Commission, June 1977.

460. NUREG/CR-1060, "Activities, Effects, and Impacts of the Coal Fuel Cycle for a 1,000 MWe Electric Power Generating Plant," U.S. Nuclear Regulatory Commission, February 1980.

461. NUREG-0332, "Health Effects Attributable to Coal and Nuclear Fuel Cycle Alternatives," U.S. Nuclear Regulatory Commission, November 1977.

462. NUREG/CR-0022,""Need for Power: Determination in the State Decisionmaking Process," U.S. Nuclear Regulatory Commission, March 1978.

463. NUREG/CR-0250, "Regional Econometric Model for Forecasting Electricity Demand by Sector and State," U.S. Nuclear Regulatory Commission, October 1978.

464. NUREG-0555, "Environmental Standard Review Plans for the Environmental Review of Construction Permit Applications for Nuclear Power Plants," U.S. Nuclear Regulatory Commission, May 1979.

465. NUREG-0398, "Federal-State Cooperation in Nuclear Power Plant Licensing," U.S. Nuclear Regulatory Commission, March 1980.

466. NUREG-0942, "Conducting Need-for-Power Review for Nuclear Power Plants," U.S. Nuclear Regulatory Commission, December 1982.

467. NUREG/CR-2423, "Mathematical Simulation of Sediment and Radionuclide Transport in Estuaries," U.S. Nuclear Regulatory Commission, November 1982.

468. NUREG/CR-2823, "A Review of the Impact of Copper Released into Marine and Estuarine Environments," U.S. Nuclear Regulatory Commission, November 1982.

469. NUREG/CR-0892, "Chronic Effects of Chlorination Byproducts on Rainbow Trout, Salmo gairdneri," U.S. Nuclear Regulatory Commission, November 1980.

470. NUREG/CR-0893, "Acute Toxicity and Bioaccummulation of Chloroform to Four Species of Freshwater Fish," U.S. Nuclear Regulatory Commission, August 1980.

471. NUREG/CR-2750, "Socioeconomic Impacts of Nuclear Generating Stations," U.S. Nuclear Regulatory Commission, July 1982.

472. NUREG/CR-2861, "Image Analysis for Facility Siting: A Comparison of Low and High-Attitude Image Interpretability for Land Use/Land Cover Mapping," U.S. Nuclear Regulatory Commission, November 1982.

473. NUREG/CR-2550, "Charcoal Performance Under Simulated Accident Conditions," U.S. Nuclear Regulatory Commission, July 1982.

474. NUREG-0700, "Guidelines for Control Room Design Reviews," U.S. Nuclear Regulatory Commission, September 1981.

475. Memorandum for W. Minners from F. Congel, "Prioritization of Generic Issue 58, Containment Flooding," May 19, 1983. [8306080295]

476. Regulatory Guide 4.2, "Preparation of Environmental Reports for Nuclear Power Stations," U.S. Nuclear Regulatory Commission, July 1976. [7908310195]

477. NUREG/CR-2692, "An Integrated System for Forecasting Electric Energy and Load for States and Utility Service Areas," U.S. Nuclear Regulatory Commission, May 1982.

478. Regulatory Guide 1.57, "Design Limits and Loading Combinations for Metal Primary Reactor Containment System Components," U.S. Nuclear Regulatory Commission, June 1973. [7907100220]

479. Regulatory Guide 1.7, "Control of Combustible Gas Concentrations in Containment Following a Loss-of-Coolant Accident," U.S. Nuclear Regulatory Commission, November 1978. [7812270049]

480. Regulatory Guide 1.109, "Calculation of Annual Doses to Man from Routine Releases of Reactor Effluents for the Purpose of Evaluating Compliance with 10 CFR Part 50, Appendix I," U.S. Nuclear Regulatory Commission, October 1977. [7907100401]

481. Regulatory Guide 1.35, "Inservice Inspection of Ungrouted Tendons in Prestressed Concrete Containments," U.S. Nuclear Regulatory Commission, February 1973, (Rev. 1) June 1974, (Rev. 2) January 1976 [7907100149], (Rev. 3) July 1990 [7809180004].

482. Regulatory Guide 1.90, "Inservice Inspection of Prestressed Concrete Containment Structures with Grouted Tendons," U.S. Nuclear Regulatory Commission, August 1977. [7907100329]

483. ORNL-5470, "CONCEPT-5 User's Manual," Oak Ridge National Laboratory, December 1978.

484. ORNL/TM-6467, "A Procedure for Estimating Nonfuel Operation and Maintenance Costs for Large Steam-Electric Power Plants," Oak Ridge National Laboratory, January 1979.

485. NUREG/CR-2844, "Nonfuel Operation and Maintenance Costs for Large Steam-Electric Power Plants - 1982," U.S. Nuclear Regulatory Commission, September 1982.

486. Memorandum for Z. Rosztoczy, et al., from W. Anderson, "Seismic Scram," January 20, 1983. [8302100005]

487. Memorandum for G. Arndt from G. Burdick, "Review of Seismic Scram Report, UCRL-53037," March 3, 1983. [8303160092]

488. NUREG-0610, "Draft Emergency Action Level Guidelines for Nuclear Power Plants," U.S. Nuclear Regulatory Commission, September 1979.

489. NUREG/CR-2963, "Planning Guidance for Nuclear Power Plant Decontamination," U.S. Nuclear Regulatory Commission, June 1983.

490. Memorandum for H. Denton from C. Michelson, "Potential Generator Missiles - Generator Rotor Retaining Rings," March 16, 1982. [8203300270]

491. NRC Letter to All Licensees of Operating Westinghouse and CE PWRs (Except Arkansas Nuclear One - Unit 2 and San Onofre Units 2 and 3), "Inadequate Core Cooling Instrumentation System (Generic Letter No. 82-28)," December 10, 1982. [8212140103]

492. Memorandum for C. Michelson from H. Denton, "H. B. Robinson RCS Leak on January 29, 1981," June 15, 1981. [8107010140]

493. Memorandum for C. Michelson from H. Denton, "January 19, 1981, Memorandum on Degradation of Internal Appurtenances in LWR," April 30, 1981. [8105150032]

494. Memorandum for C. Michelson from H. Denton, "AEOD Preliminary Report on Calvert Cliffs Unit 1 Loss of Service Water," August 5, 1981. [8108170221]

495. Memorandum for C. Michelson from H. Denton, "Steam Generator Overfill and Combined Primary and Secondary Blowdown," May 27, 1981. [8106100241]

496. Memorandum for H. Denton from C. Michelson, "Concerns Relating to the Integrity of a Polymer Coating for Surfaces Inside Containment (IE Draft Bulletin No. 80-21)," August 29, 1980. [8210120370, 8009110599]

497. Memorandum for H. Denton and V. Stello from C. Michelson, "Immediate Action Memo: Common Cause Failure Potential at Rancho Seco - Desiccant Contamination of Air Lines," September 15, 1981. [8109280036]

498. Memorandum for C. Michelson from H. Denton, "AEOD Immediate Action Memo on Contamination of Instrument Air Lines at Rancho Seco," October 26, 1981. [8111300391]

499. Memorandum for H. Denton, et al., from C. Michelson, "Case Study Report on San Onofre Unit 1 Loss of Salt Water Cooling Event on March 10, 1980," August 12, 1980. [8208270684]

500. Memorandum for C. Michelson from H. Denton, "NRR Comments on AEOD Final Report: Case Study Report on San Onofre Unit 1 Loss of Salt Water Cooling Event of March 10, 1980," October 8, 1982. [8211030304]

501. IE Bulletin No. 79-24, "Frozen Lines," U.S. Nuclear Regulatory Commission, September 27, 1979. [7908220114]

502. Memorandum for H. Denton and V. Stello from C. Michelson, "Inoperability of Instrumentation Due to Extreme Cold Weather," June 15, 1981. [8107010161]

503. Memorandum for C. Michelson from H. Denton, "AEOD Memorandum on the Inoperability of Instrumentation Due to Extreme Cold Weather," August 14, 1981. [8109110138]

504. Draft Regulatory Guide and Value/Impact Statement, Task IC 126-5, "Instrument Sensing Lines," U.S. Nuclear Regulatory Commission, March 1982. [8204190028]

505. Regulatory Guide 1.151, "Instrument Sensing Lines," U.S. Nuclear Regulatory Commission, July 1983. [8808230051]

506. Federal Register Notice 48 FR 36029, "Regulatory Guide; Issuance, Availability," August 8, 1983.

507. Memorandum for C. Michelson from H. Denton, "Interlocks and LCO's for Redundant Class 1E Tie Breakers (Point Beach Nuclear Plant Units 1 and 2)," October 16, 1980. [8011050312]

508. Memorandum for F. Schroeder from L. Rubenstein, "Review of General Electric Topical Report NEDO-10174, Revision 1," August 18, 1982. [8209030003]

509. Memorandum for C. Michelson from H. Denton, "NRR Comments on AEOD Final Report: Survey of Valve Operator-Related Events Occurring During 1978, 1979, and 1980," August 19, 1982. [8404110426]

510. Memorandum for C. Michelson from H. Denton, "Effects of Fire Protection System Actuation on Safety-Related Equipment," August 27, 1982. [8506050357]

511. "Value-Impact Analysis of Recommendations Concerning Steam Generator Tube Degradations and Rupture Events," Science Applications, Inc., February 2, 1983.

512. Memorandum for D. Eisenhut from T. Speis, "DST Prioritization of Steam Generator Requirements," May 4, 1983. [8305230682]

513. SECY-82-186A, "Make-up Nozzle Cracking in Babcock and Wilcox (B&W) Plants," July 23, 1982. [8209300376]

514. Letter to J. Stolz (NRC) from G. Westafer (Florida Power Corporation), "Crystal River Unit 3, Docket No. 50-302, Operating License No. DPR-72, Safe End Task Force Action Plan," February 28, 1983. [8303040544]

515. Memorandum for W. Minners from D. Dilanni, "Proposed Generic Issue 'PORV and Block Valve Reliability,'" June 6, 1983. [8307050513]

516. Memorandum for W. Johnston and L. Rubenstein from T. Speis, "Failure of Resin Demineralizer Systems and Their Effects on Nuclear Power Plant Safety," August 6, 1982. [8208230475]

517. Memorandum for the Atomic Safety & Licensing Boards for: Callaway Plant, Unit 1; Comanche Peak Steam Electric Station, Units 1 & 2; and the Atomic Safety & Licensing Appeal Board for Virgil C. Summer Nuclear Station, Unit 1, from T. Novak, "Board

Notification - Control Rod Drive Guide Tube Support Pin Failures at Westinghouse Plants (Board Notification No. 82-81)," August 16, 1982. [8209290318]

518. Memorandum for D. Eisenhut from J. Crews, "NRC Lead Responsibility for Possibly Detached Thermal Sleeves - Trojan Nuclear Plant - Docket No. 50-344," June 18, 1982. [8710220041]

519. Memorandum for W. Minners from L. Hulman, "Generic Issue on Iodine Coolant Activity Limiting Conditions for Operation," June 10, 1983. [8307080562]

520. NRC Letter to All Licensees of Operating Reactors, Applicants for Operating Licenses, and Holders of Construction Permits, "Required Actions Based on Generic Implications of Salem ATWS Events," (Generic Letter No. 83-28), July 8, 1983 [8307080169], (Supplement 1) October 7, 1992 [9210050243].

521. SECY-83-248, "Generic Actions for Licensees and Staff in Response to the ATWS Events at Salem Unit 1," June 22, 1983. [8307110103]

522. AEOD/P301, "Report on the Implications of the ATWS Events at the Salem Nuclear Power Plant on the NRC Program for Collection and Analysis of Operational Experience," Office for Analysis and Evaluation of Operational Data, U.S. Nuclear Regulatory Commission, July 1983. [8307140507]

523. Memorandum for C. Heltemes from H. Denton, "AEOD Final Report on the Implications of the ATWS Events at the Salem Nuclear Power Plant on the NRC Program for Collection and Analysis of Operational Experience," July 21, 1983. [8307290045]

524. Memorandum for R. Mattson from T. Speis, "Draft CRGR Package on A-30, DC Power," May 24, 1983. [8306030487]

525. Memorandum for H. Denton from C. Heltemes, "Engineering Evaluation Report, Investigation of Backflow Protection in Common Equipment and Floor Drain Systems to Prevent Flooding of Vital Equipment in Safety-Related Compartments," March 11, 1983. [8303290078]

526. NUREG/CR-3226, "Station Blackout Accident Analyses (Part of NRC Task Action Plan A-44)," U.S. Nuclear Regulatory Commission, May 1983.

527. IE Information Notice No. 83-44, "Potential Damage to Redundant Safety Equipment as a Result of Backflow Through the Equipment and Floor Drain System," U.S. Nuclear Regulatory Commission, July 1, 1983 [8305110502], (Supplement 1) August 30, 1990 [9008240057].

528. Memorandum for B. Liaw from H. Berkow, "OMB Clearance Renewal - Monitoring of Fatigue Transient Limits for Reactor Coolant System," May 13, 1983. [9705190223]

529. Memorandum for H. Berkow from W. Minners, "OMB Clearance Renewal -Monitoring of Fatigue Transient Limits for Reactor Coolant System," June 1, 1983. [8306090456]

530. Letter to R. DeYoung (NRC) from J. Taylor (B&W), "Unanalyzed Reactor Vessel Thermal Stress During Cooldown," March 18, 1983. [8303250020]

531. Memorandum for R. Vollmer from W. Minners, "B&W Notification Concerning an Unanalyzed Reactor Vessel Thermal Stress During Cooldown," April 7, 1983. [8304140390]

532. Regulatory Guide 1.93, "Availability of Electric Power Sources," U.S. Nuclear Regulatory Commission, December 1974. [7907100337]

533. Memorandum for W. Minners from R. Bosnak, "B&W Notification Concerning an Unanalyzed Reactor Vessel Thermal Stress During Cooldown," April 26, 1983. [8305240235]

534. Memorandum for N. Palladino, et al., from D. Eisenhut, "Unanalyzed Reactor Vessel Thermal Stress During Cooldown (Board Notification #BN-83-42)," April 12, 1983. [8304220651]

535. CE-NPSD-154, "Natural Circulation Cooldown, Task 430 Final Report," Combustion Engineering, Inc., October 1981. [8304280091]

536. B&W Document No. 86-1140819-00, "Reactor Vessel Head Cooldown During Natural Circulation Cooldown Transients," Babcock & Wilcox Company, February 8, 1983. [8302160171]

537. Memorandum for W. Dircks from R. Fraley, August 18, 1982. [8207180092]

538. Memorandum for R. Fraley from H. Denton, "ACRS Inquiry on Pipe Break Effects on CRD Hydraulic Lines," October 29, 1982. [8211120045]

539. Letter to W. Dircks from J. Ebersole, "ACRS Comments Regarding Potential Pipe Break Effects on Control Rod Drive Hydraulic Lines in the Drywells of BWR Mark I and II Containments," March 16, 1983. [8303290428]

540. BNL-NUREG-28109, "Thermal-Hydraulic Effects on Center Rod Drop Accidents in a Boiling Water Reactor," Brookhaven National Laboratory, July 1980. [8101220642]

541. Memorandum for B. Sheron from C. Berlinger, "ACRS Request for Information Related to LOCA Effects on CRD Hydraulic Lines," October 19, 1982. [8211040446]

542. Memorandum for R. Mattson, et al., from D. Eisenhut, "Potential Safety Problems Associated With Locked Doors and Barriers in Nuclear Power Plants," May 31, 1983. [8306200435]

543. Memorandum for T. Speis from R. Mattson, "Proposed Generic Issue on Beyond Design Basis Accidents in Spent Fuel Pools," August 10, 1983. [8308180730]

544. NUREG/CR-0649, "Spent Fuel Heatup Following Loss of Water During Storage," U.S. Nuclear Regulatory Commission, May 1979.

545. Memorandum for Z. Rosztoczy from P. Williams, "Trip Report: International Meeting on Severe Fuel Damage and Visit to Power Burst Facility," April 25, 1983. [8305060661]

546. Memorandum to C. Rossi from D. Cool, "NMSS Input for Second Quarter FY-2000 Update of the Generic Issues Management Control System," April 18, 2000.

547. SECY-95-245, "Completion of the Fatigue Action Plan," September 25, 1995. [9509290040]

548. Memorandum for W. Dircks from R. DeYoung, "TMI Action Plan Completed Items," January 26, 1983. [8303090323]

549. NUREG/CR-2039, "Dynamic Combinations for Mark II Containment Structures," U.S. Nuclear Regulatory Commission, June 1982.

550. NUREG/CR-1890, "ABS, SRSS and CDF Response Combination Evaluation for Mark III Containment and Drywell Structures," U.S. Nuclear Regulatory Commission, June 1982.

551. Letter to N. Palladino from J. Ray, "Need for Rapid Depressurization Capability in Newer Combustion Engineering, Inc. Plants," October 18, 1983. [8311010118]

552. Memorandum for W. Minners from B. Siegel, "Proposed Generic Issue 'Reliability of Vacuum Breakers Connected to Steam Discharge Lines Inside BWR Containments,'" November 3, 1983. [8312140360]

553. Memorandum for D. Eisenhut from J. Olshinski, "Loss of High Head Injection Capability at McGuire Unit 1 and Reconsideration of Technical Specification 3.0.3 and 3.5.2," April 12, 1982. [8802120046]

554. Memorandum for D. Eisenhut, et al., from H. Denton, "Development of Generic Recommendations Based on the Review of the January 25, 1982 Steam Generator Tube Rupture at Ginna," May 3, 1982. [8205280089]

555. Letter to D. Eisenhut (NRC) from D. Waters (BWR Owners' Group), "BWR Owners' Group Evaluations of NUREG-0737 Requirements II.K.3.16 and II.K.3.18," March 31, 1981. [8104200300]

556. Memorandum for G. Lainas, et al., from W. Houston, "Evaluation of BWR Owners' Group Generic Response to Item II.K.3.16 of NUREG-0737, 'Reduction of Challenges and Failures of Relief Valves - Feasibility Study and System Modification,'" April 1, 1983. [8711060070]

557. Memorandum for H. Denton and V. Stello from C. Michelson, "Calvert Cliffs Unit 1 Loss of Service Water," June 19, 1981. [8107060505]

558. Memorandum for H. Denton and R. DeYoung from C. Michelson, "Calvert Cliffs Unit 1 Loss of Service Water on May 20, 1980," December 17, 1981. [8201150431]

559. Memorandum for C. Michelson from H. Denton, "NRR Comments on AEOD Final Report: Calvert Cliffs Unit 1 Loss of Service Water on May 20, 1980," September 23, 1982. [8210180230]

560. Memorandum for H. Denton from C. Heltemes, "Response to NRR Comments on AEOD Report, 'Calvert Cliffs Unit 1 Loss of Service Water on May 20, 1980,'" May 2, 1983. [8305110577]

561. Memorandum for W. Houston and L. Rubenstein from F. Miraglia, "Response to NRR Comments on AEOD Report, 'Calvert Cliffs Unit 1 Loss of Service Water on May 20, 1980,'" June 2, 1983. [8306080036]

562. Memorandum for F. Miraglia from W. Houston and L. Rubenstein, "Comments to AEOD Memo dated May 2, 1983, on Calvert Cliffs, Unit 1, Loss of Service Water on May 20, 1980," July 22, 1983. [8308030493]

563. Memorandum for C. Heltemes from H. Denton, "Response to NRR Comments on AEOD Report, 'Calvert Cliffs Unit 1 Loss of Service Water on May 20, 1980,'" September 15, 1983. [8309270470]

564. Memorandum for R. Baer from K. Seyfrit, "Case Study, 'Calvert Cliffs Unit 1 Loss of Service Water on May 29, 1980,'" August 18, 1983. [8308290487]

565. IE Information Notice No. 83-77, "Air/Gas Entrainment Events Resulting in System Failures," U.S. Nuclear Regulatory Commission, November 14, 1983. [8311010015]

566. Memorandum for G. Holahan from W. Minners, "Prioritization of Issue 36: Loss of Service Water at Calvert Cliffs Unit 1," November 10, 1983. [8311180373]

567. Letter to A. Lundvall (Baltimore Gas and Electric Company) from D. Eisenhut (NRC), Docket No. 50-317, September 15, 1983. [8309270504]

568. Memorandum for W. Houston and L. Rubenstein from F. Schroeder, "Request for Reactor Systems Branch and Auxiliary Systems Branch Support for Plant Visits on USI A-45," November 28, 1983. [8312150068]

569. AEOD/C102, "Engineering Evaluation of the H. B. Robinson Reactor Coolant System Leak on January 29, 1981," Office for Analysis and Evaluation of Operational Data, U.S. Nuclear Regulatory Commission, March 23, 1981. [8104150060]

570. Memorandum for V. Stello from H. Denton, "Issuance of Revised Section 7.1, Appendix A to this Section, Section 7.5 and Section 7.7 of the Standard Review Plan, NUREG-0800," March 9, 1984. [8404160228]

571. Memorandum for H. Denton from V. Stello, "SRP Changes Concerning Resolution of Generic Issue 45, Inoperability of Instrumentation due to Extreme Cold Weather," April 3, 1984. [8404180510]

572. Memorandum for G. Lainas from F. Rowsome, "Safety Evaluation of the Westinghouse Licensees' Responses to TMI Action Item II.K.3.2," July 22, 1983. [8308040054]

573. Memorandum for G. Lainas from F. Rowsome, "Safety Evaluation of the B&W Licensees' Responses to TMI Action Item II.K.3.2," August 24, 1983. [8308310422]

574. Memorandum for G. Lainas from F. Rowsome, "Safety Evaluation of the CE Licensees' Responses to TMI Action Item II.K.3.2," August 26, 1983. [8309060394]

575. Memorandum for W. Minners from B. Sheron, "Proposed Generic Issue on PORV and Block Valve Reliability," June 27, 1983. [8307180224]

576. Memorandum for R. Riggs from F. Cherny, "Comments on Draft Write-up of Prioritization of Generic Issue 70 'PORV and Block Valve Reliability,'" December 21, 1983. [8401030003]

577. Memorandum for H. Denton, et al., from C. Heltemes, "Case Study Report - Low Temperature Overpressure Events at Turkey Point Unit 4," September 26, 1983. [8310060171]

578. NUREG-0748, "Operating Reactors Licensing Actions Summary," U.S. Nuclear Regulatory Commission, (Vol. 5, No. 11) February 1986.

579. NUREG-0694, "TMI-Related Requirements for New Operating Licenses," U.S. Nuclear Regulatory Commission, June 1980.

580. NUREG-0645, "Report of the Bulletins & Orders Task Force of the Office of Nuclear Reactor Regulation," U.S. Nuclear Regulatory Commission, (Vol. 1) January 1980, (Vol. 2) January 1980.

581. NUREG-0909, "NRC Report on the January 25, 1982 Steam Generator Tube Rupture at R.E. Ginna Nuclear Power Plant," U.S Nuclear Regulatory Commission, April 1982.

582. NUREG-0713, "Occupational Radiation Exposure at Commerical Nuclear Power Reactors - 1981," U.S Nuclear Regulatory Commission, (Vol. 1) March 1981, (Vol. 2) December 1981, (Vol. 3) November 1982, (Vol. 4) November 1983, (Vol. 5) March 1985, (Vol. 6) September 1986, (Vol. 7) April 1988.

583. EPRI NP-2292, "PWR Safety and Relief Valve Test Program," Electric Power Research Institute, December 1982.

584. EPRI NP-1139, "Limiting Factor Analysis of High Availability Nuclear Plants," Electric Power Research Institute, August 1979.

585. EPRI P-2410-SR, "Technical Assessment Guide," Electric Power Research Institute, May 1982.

586. WCAP-9804, "Probabilistic Analysis and Operational Data in Response to NUREG-0737 Item II.K.3.2 for Westinghouse NSSS Plants," Westinghouse Electric Corporation, February 1981. [8103160257]

587. "Accident Sequence Evaluation Program, Phase II Workshop Report," Sandia National Laboratories, EG&G Idaho, Inc., and Science Applications, Inc., September 1982.

588. Letter to Director (NRR) from K. Cook (Louisiana Power & Light), "Waterford SES Unit 3, Docket No. 50-382, Depressurization and Decay Heat Removal," October 27, 1983. [8311010259]

589. Letter to W. Dircks (NRC) from E. Van Brunt (Arizona Public Service Company), "Palo Verde Nuclear Generating Station (PVNGS), Units 1, 2, and 3, Docket Nos. STN-50-528/529/530," November 7, 1983. [8312230233]

590. ALO-75 (TR-3459-1), "Pilot Program to Identify Valve Failures Which Impact the Safety and Operation of Light Water Nuclear Power Plants," Teledyne Engineering Services, January 11, 1980.

591. IE Information Notice No. 82-45, "PWR Low Temperature Overpressure Protection," U.S. Nuclear Regulatory Commission, November 19, 1982. [8208190253]

592. IE Information Notice No. 82-17, "Overpressurization of Reactor Coolant System," U.S. Nuclear Regulatory Commission, June 10, 1982. [8204210383]

593. SECY-84-76, "Proposed Rulemaking for Operator Licensing and for Training and Qualifications of Civilian Nuclear Power Plant Personnel," February 13, 1984. [8403260357]

594. Letter to E. Wilkinson (INPO) from W. Dircks (NRC), November 23, 1983. [8312090099]

595. SECY-83-52A, "Final Rulemaking Concerning Licensed Operator Staffing at Nuclear Power Units and Draft Policy Statement on Shift Crew Qualifications," March 14, 1983. [8304010029]

596. Memorandum for W. Dircks from S. Chilk, "Staff Requirements - Affirmation/ Discussion and Vote, 3:35 p.m., Thursday, April 21, 1983, Commissioners' Conference Room (Open to Public Attendance)," April 28, 1983. [9705190263]

597. Federal Register Notice 48 FR 33850, "Licensee Event Report System," July 26, 1983.

598. Memorandum for W. Dircks from R. Mattson, "Closeout of TMI Action Plan Task III.D.2.5, 'Offsite Dose Calculation Manual,'" January 17, 1984. [8402020114]

599. NUREG/CR-3332, "Radiological Assessment - A Textbook on Environmental Dose Analysis," U.S. Nuclear Regulatory Commission, September 1983.

600. NUREG-0978, "Mark III LOCA-Related Hydrodynamic Load Definition," U.S. Nuclear Regulatory Commission, August 1984.

601. Memorandum for T. Combs from H. Denton, "Revised SRP Section 6.2.1.1.C of NUREG-0800," September 10, 1984. [8409180459]

602. Memorandum for T. Speis from R. Mattson, "Status of Generic Issues 40 and 65 Assigned to DSI," December 27, 1983. [8401170445]

603. Regulatory Guide 1.45, "Reactor Coolant Pressure Boundary Leakage Detection Systems," U.S. Nuclear Regulatory Commission, May 1973. [7907100185]

604. SECY-81-641, "Electromagnetic Pulse (EMP) - Effects on Nuclear Power Plants," November 5, 1981. [8202090418, 8111250553]

605. SECY-82-157, "Status Report on the Evaluation of the Effects of Electromagnetic Pulse (EMP) on Nuclear Power Plants," April 13, 1982. [8205050108]

606. SECY-83-367, "Staff Study of Electromagnetic Pulse (EMP) Effects on Nuclear Power Plants and Discussion of Related Petitions for Rulemaking (PRM-50-32, 32A, and 32B)," September 6, 1983. [8312210152]

607. Memorandum for W. Dircks from S. Chilk, "SECY-83-367 - Staff Study of Electromagnetic Pulse (EMP) Effects on Nuclear Power Plants and Discussion of Related Petition for Rulemaking (PRM-50-32, 32A, and 32B)," November 15, 1983. [8402270019]

608. IE Information Notice No. 82-39, "Service Degradation of Thick-Walled Stainless Steel Recirculation Systems at BWR Plants," U.S. Nuclear Regulatory Commission, September 21, 1982. [8208190229]

609. IE Bulletin No. 82-03, "Stress Corrosion Cracking in Thick-Wall Large Diameter, Stainless Steel Recirculation System Piping at BWR Plants," U.S. Nuclear Regulatory Commission, October 14, 1982 [8208190238], (Rev. 1) October 28, 1982 [8208190240].

610. IE Bulletin No. 83-02, "Stress Corrosion Cracking in Large Diameter Stainless Steel Recirculation System Piping at BWR Plants," U.S. Nuclear Regulatory Commission, March 4, 1983. [8212060368]

611. NUREG-1061, "Report of the U.S. Nuclear Regulatory Commission Piping Review Committee," U.S. Nuclear Regulatory Commission, (Vol. 1) August 1984, (Vol. 2) April 1985, (Vol. 3) November 1984, (Vol. 4) December 1984, (Vol. 5) April 1985.

612. SECY-83-267, "Status Report on Observation of Pipe Cracking at BWRs," July 1, 1983. [8307250565]

613. SECY-83-267A, "Update of Status Report on Observation of Pipe Cracking at BWRs (SECY-83-267)," July 11, 1983. [8307250578]

614. SECY-83-267B, "Update of Status Report on Observation of Pipe Cracking at BWRs (SECY-83-267 and 267A)," August 8, 1983. [8308230648]

615. SECY-83-267C, "Staff Requirements for Reinspection of BWR Piping and Repair of Cracked Piping," November 7, 1983. [8311160350]

616. SECY-84-9, "Report on the Long Term Approach for Dealing with Stress Corrosion Cracking in BWR Piping," January 10, 1984. [8402230344]

617. SECY-84-9A, "Update of Status Report on BWR Pipe Cracks and Projection of Upcoming Licensee Actions," January 27, 1984. [8402230347]

618. SECY-84-166, "Update of Status Report on BWR Pipe Cracks and Projection of Upcoming Licensee Actions," April 20, 1984. [8405180011]

619. SECY-84-301, "Staff Long Range Plan for Dealing with Stress Corrosion Cracking in BWR Piping," July 30, 1984. [8408090406]

620. NRC Letter to All Licensees of Operating Reactors, Applicants for Operating License, and Holders of Construction Permits for Boiling Water Reactors, "Inspections of BWR Stainless Steel Piping," (Generic Letter 84-11), April 19, 1984. [8404230029]

621. NUREG-0992, "Report of the Committee to Review Safeguards Requirements at Power Reactors," U.S. Nuclear Regulatory Commission, May 1983.

622. Memorandum for T. Speis from R. Mattson, "Fuel Crumbling During LOCA,' February 2, 1983. [8302170511]

623. Memorandum for H. Denton from D. Eisenhut, "Potential Safety Problems Associated with Locked Doors and Barriers in Nuclear Power Plants," December 22, 1983. [8401130140]

624. Memorandum for D. Eisenhut from H. Denton, "Safety-Safeguards Interface," January 16, 1984. [8402010286]

625. Memorandum for H. Thompson from D. Eisenhut, "Potential Safety Problems Associated with Locked Doors and Barriers in Nuclear Power Plants," January 30, 1984. [8402140525]

626. Memorandum for T. Speis from H. Thompson, "Submittal of Potential Generic Issue Associated with Locked Doors and Barriers," June 8, 1984. [8407060042]

627. SECY-83-311, "Proposed Insider Safeguards Rules," July 29, 1983. [8308190179]

628. IE Information Notice No. 83-36, "Impact of Security Practices on Safe Operations," U.S. Nuclear Regulatory Commission, June 9, 1983. [8305110464]

629. Memorandum for H. Thompson from D. Morrison, "Closeout of Generic Safety Issue 78, 'Monitoring of Fatigue Transient Limits for Reactor Coolant System (RCS)' and Generic Safety Issue 166, 'Adequacy of Fatigue Life of Metal Components,'" February 5, 1997. [9703050391]

630. Memorandum for W. Minners from F. Miraglia, "Proposed Generic Issue - Technical Specifications for Anticipatory Trips," February 23, 1984. [8403080271]

631. Memorandum for F. Miraglia from W. Houston, "Task Interface Agreement Task No. 83-77 (TAC 40002, PA-157)," November 29, 1983. [8401060510]

632. NUREG/CR-6117, "Neutron Spectra at Different High Flux Isotope Reactor (HFIR) Pressure Vessel Surveillance Locations," U.S. Nuclear Regulatory Commission, December 1993.

633. Memorandum for P. Check from H. Richings, "Some Notes on PWR (W) Power Distribution Probabilities for LOCA Probabilistic Analyses," July 5, 1977.

634. NUREG-0630, "Cladding Swelling and Rupture Models for LOCA Analysis," U.S. Nuclear Regulatory Commission, April 1980.

635. Memorandum for G. Holahan and W. Minners from R. Mattson, "Disposition of AEOD Engineering and Technical Evaluation Reports," April 10, 1984. [9705190219]

636. Memorandum for R. DeYoung and H. Denton from C. Heltemes, "Vapor Binding of Auxiliary Feedwater Pumps," November 21, 1983. [8312070028]

637. AEOD/C404, "Steam Binding of Auxiliary Feedwater Pumps," Office for Analysis and Evaluation of Operational Data, U.S. Nuclear Regulatory Commission, July 1984. [8408060083]

638. Memorandum for H. Denton from C. Michelson, "Tie Breaker Between Redundant Class 1E Buses - Point Beach Nuclear Plant, Units 1 and 2," August 27, 1980. [8009150214, 8009160668]

639. Letter to J. Keppler (NRC) from C. Fay (Wisconsin Electric Power Company), "Docket No. 50-301, Point Beach Nuclear Plant Unit 2 Licensee Event Report No. 80-005/03L-0," June 27, 1980. [8007080381]

640. Memorandum for H. Denton from C. Heltemes, "Special Study Report - Human Error in Events Involving Wrong Unit or Wrong Train," January 13, 1984. [8401310079]

641. IE Information Notice No. 84-51, "Independent Verification," U.S. Nuclear Regulatory Commission, June 26, 1984. [8406250214]

642. IE Information Notice No. 84-58, "Inadvertent Defeat of Safety Function Caused by Human Error Involving Wrong Unit, Wrong Train, or Wrong System," U.S. Nuclear Regulatory Commission, July 25, 1984. [8407230079]

643. Memorandum for H. Denton from C. Heltemes, "Human Error in Events Involving Wrong Unit or Wrong Train," August 8, 1984. [9705190238]

644. Memorandum for D. Eisenhut, et al., from H. Thompson, "Maintenance and Surveillance Program Implementation Plan," July 7, 1984. [8407160259]

645. Memorandum for C. Heltemes from H. Denton, "Special Study Report - Human Errors in Events Involving Wrong Unit or Wrong Train," May 2, 1984. [8405170027]

646. Memorandum for C. Heltemes from H. Denton, "Human Error in Events Involving Wrong Unit or Wrong Train," September 17, 1984. [8410040282]

647. Memorandum for T. Speis from H. Denton, "Resolution of Generic Issue B-26, 'Structural Integrity of Containment Penetrations,'" September 27, 1984. [8410120090]

648. Memorandum for T. Speis from H. Denton, "Closeout of Generic Issue B-54, 'Ice Condenser Containments,'" October 22, 1984. [8411050142]

649. NUREG/CR-3716, "CONTEMPT 4/MOD 4," U.S. Nuclear Regulatory Commission, March 1984.

650. NUREG/CR-4001, "CONTEMPT 4/MOD 5," U.S. Nuclear Regulatory Commission, September 1984.

651. NUREG-0985, "U.S. Nuclear Regulatory Commission Human Factors Program Plan," U.S. Nuclear Regulatory Commission, August 1983, (Rev. 1) September 1984, (Rev. 2) April 1986.

652. Memorandum for W. Dircks from R. DeYoung, "Elimination of Duplicative Tracking Requirements for Revision of Regulatory Guide 1.33," July 26, 1984. [9705190264]

653. NUREG/CR-3123, "Criteria for Safety-Related Nuclear Power Plant Operator Actions: 1982 Pressurized Water Reactor (PWR) Simulator Exercises," U.S. Nuclear Regulatory Commission, June 1983.

654. Memorandum for W. Dircks from H. Thompson, "Closeout of TMI Action Plan Task I.G.2, 'Scope of Test Program,'" October 5, 1984. [8410160524]

655. Memorandum for W. Dircks from H. Denton, "Generic Issue II.A.1, 'Siting Policy Reformulation,'" September 17, 1984. [8410090175]

656. Memorandum for W. Dircks from H. Denton, "Closeout of TMI Action Plan Task II.E.5.2, Transient Response of B&W Designed Reactors," September 28, 1984. [8410110596]

657. Memorandum for D. Crutchfield from D. Eisenhut, "TMI Action Plan Task II.E.5.2," November 6, 1984. [8411270129]

658. NUREG-1054, "Simplified Analysis for Liquid Pathway Studies," U.S. Nuclear Regulatory Commission, August 1984.

659. Memorandum for H. Denton from R. Vollmer, "ESRP 7.1.1 'Environmental Impacts of Postulated Accidents Involving Radioactive Materials - Releases to Groundwater,'" September 25, 1984. [8410100758]

660. Memorandum for W. Dircks from H. Denton, "Generic Issue III.D.2.3 'Liquid Pathway Radiological Control,'" October 29, 1984. [8411190057]

661. Memorandum for H. Denton from C. Heltemes, "Failures of Class 1E Safety-Related Switchgear Circuit Breakers to Close on Demand," April 29, 1983. [8305230511]

662. Memorandum for C. Heltemes from H. Denton, "AEOD April 1983 Report on Failures of Class 1E Safety-Related Switch Gear Circuit Breakers to Close on Demand," June 17, 1983. [8306280125]

663. IE Information Notice No. 83-50, "Failures of Class 1E Safety-Related Switchgear Circuit Breakers to Close on Demand," August 1, 1983. [8306270418]

664. Memorandum for D. Eisenhut from R. Spessard, "Unmonitored Failures of Class 1E Safety-Related Switchgear Circuit Breakers and Power Supplies (AITS-F03052383)," June 1, 1984. [8408230490]

665. NUREG/CR-2989, "Reliability of Emergency AC Power System at Nuclear Power Plants," U.S. Nuclear Regulatory Commission, July 1983.

666. Memorandum for T. Speis from H. Denton, "Resolution of Generic Issue B-12: BWR Jet Pump Integrity," September 25, 1984. [8410030458]

667. Memorandum for T. Speis from H. Denton, "Resolution of Generic Issue 69: Make-up Nozzle Cracking in B&W Plants," September 27, 1984. [8410150536]

668. Memorandum for H. Denton from R. Minogue, "Comments on Generic Issue 79, 'Unanalyzed Reactor Vessel Thermal Stress During Natural Convection Cooldown,'" October 5, 1983. [8310260398]

669. Letter to P. Kadambi (NRC) from F. Miller (B&W Owners Group Analysis Committee), "Transmittal of RV Head Stress Evaluation Program Results," October 15, 1984. [8410190186]

670. Memorandum for H. Denton from R. Mattson, "Generic Issue B-60, Loose Parts Monitoring Systems for Operating Reactors (TACS 52325)," January 10, 1984. [8401180046]

671. Letter to N. Palladino from P. Shewmon, "Control Room Habitability," August 18, 1982. [8207180073]

672. Memorandum for J. Larkins from J. Murphy, "Proposed Resolution of GSI-15, 'Radiation Effects on Reactor Pressure Vessel Supports,'" June 22, 1994. [9407140032]

673. Letter to W. Dircks from J. Ebersole, "ACRS Subcommittee Report on Control Room Habitability," May 17, 1983. [8305260104]

674. Memorandum for W. Dircks from H. Denton, "Control Room Habitability," July 27, 1983. [8308180433]

675. Memorandum for H. Denton from W. Dircks, "Control Room Habitability," August 15, 1983. [8309160034]

676. Memorandum for T. Murley, et al., from H. Denton, " Control Room Habitability," September 19, 1983. [8310120463]

677. Letter to W. Milstead (NRC) from T. Powers (PNL), "A Probabilistic Examination of Nuclear Power Plant Control Room Habitability During Various Accident Scenarios," December 3, 1984. [8412050472]

678. Memorandum for W. Dircks from H. Denton, "Control Room Habitability," June 29, 1984. [8407100196]

679. Memorandum for T. Speis from R. Bernero, "Revised Schedule for Generic Issue 83, Control Room Habitability," September 28, 1984. [8410110484]

680. NUREG/CR-2258, "Fire Risk Analysis for Nuclear Power Plants," U.S. Nuclear Regulatory Commission, September 1981.

681. NUREG-0844, "NRC Integrated Program for the Resolution of Unresolved Safety Issues A-3, A-4, A-5 Regarding Steam Generator Tube Integrity," U.S. Nuclear Regulatory Commission, September 1988.

682. Note to W. Kane from G. Holahan, "Background Information Relating to the Assessment of the Offsite Consequences of Non-Core Melt, Steam Generator Tube Rupture Events," October 24, 1983. [9705190255]

683. Memorandum for W. Johnston from R. Ballard, "Disputed Procedures for Estimating Probable Maximum Precipitation," January 13, 1984. [8401260466]

684. Hydrometeorological Report No. 52, "Application of Probable Maximum Precipitation Estimates - United States East of the 105th Meridian," U.S. Department of Commerce, National Oceanic and Atmospheric Administration, August 1982.

685. Hydrometeorological Report No. 51, "Probable Maximum Precipitation Estimates, United States East of the 105th Meridian," U.S. Department of Commerce, National Oceanic and Atmospheric Administration, June 1978.

686. Hydrometeorological Report No. 33, "Seasonal Variation of the Probable Maximum Precipitation East of the 105th Meridian for Areas from 10 to 1,000 Square Miles and Durations of 6, 12, 24 and 48 Hours," U.S. Department of Commerce, April 1956.

687. Regulatory Guide 1.59, "Design Basis Floods for Nuclear Power Plants," U.S. Nuclear Regulatory Commission, (Rev. 2) August 1977. [7907100225]

688. Regulatory Guide 1.102, "Flood Protection for Nuclear Power Plants," U.S. Nuclear Regulatory Commission, (Rev. 1) September 1976. [7907100372]

689. Memorandum for V. Stello from H. Denton, "Potential Generic Requirement Concerning Design for Probable Maximum Precipitation," June 25, 1984. [8407100105]

690. Memorandum for V. Stello from H. Denton, "Generic Requirements Regarding Design for Probable Maximum Precipitation," October 10, 1984. [8503140522, 8410190029]

691. Memorandum for H. Denton from V. Stello, "Generic Requirements Regarding Design for Probable Maximum Precipitation," August 8, 1984. [8408160442]

692. Memorandum for T. Speis from H. Denton, "Generic Issue A-41; 'Long Term Seismic Program,'" October 10, 1984. [9705200066]

693. Memorandum for H. Denton from R. Bernero, "Resolution of Generic Issue No. 22, Inadvertent Boron Dilution Events (BDES)," September 17, 1984. [8410020424]

694. Memorandum for T. Speis from H. Denton, "Closeout of Generic Issue No. 22, 'Inadvertent Boron Dilution Events (BDE),'" October 15, 1984. [8410310592]

695. Memorandum for T. Speis from H. Denton, "Closeout of Generic Issue 50, 'Reactor Vessel Level Instrumentation in BWRs,'" October 17, 1984. [8411030745]

696. NRC Letter to All Boiling Water Reactor (BWR) Licensees of Operating Reactors (Except LaCrosse, Big Rock Point, Humboldt Bay and Dresden-1), "Reactor Vessel Water Level Instrumentation in BWRs (Generic Letter No. 84-23," October 26, 1984. [8410290050]

697. Memorandum for D. Eisenhut from R. Bernero, "Resolution of Generic Issue 50, Reactor Vessel Level Instrumentation in BWRs," September 6, 1984. [8410010093]

698. NUREG-0927, "Evaluation of Water Hammer Occurrence in Nuclear Power Plants," U.S. Nuclear Regulatory Commission, (Rev. 1) March 1984.

699. NUREG-0609, "Asymmetric Blowdown Loads on PWR Primary Systems," U.S. Nuclear Regulatory Commission, January 1981.

700. NRC Letter to All Operating PWR Licenses, Construction Permit Holders, and Applicants for Construction Permits, "Safety Evaluation of Westinghouse Topical Reports Dealing with Elimination of Postulated Pipe Breaks in PWR Primary Main Loops (Generic Letter 84-04)," February 1, 1984. [8402010410]

701. NUREG-0408, "Mark I Containment Short-Term Program Safety Evaluation Report," U.S. Nuclear Regulatory Commission, December 1977.

702. NUREG-0661, "Mark I Containment Long Term Program Safety Evaluation Report, Resolution of Generic Technical Activity A-7," U.S. Nuclear Regulatory Commission, July 1980, (Supplement 1) August 1982.

703. NUREG-0808, "Mark II Containment Program Evaluation and Acceptance Criteria," U.S. Nuclear Regulatory Commission, August 1981.

704. NUREG-0460, "Anticipated Transients Without Scram for Light Water Reactors," U.S. Nuclear Regulatory Commission, (Vol. 1) April 1978, (Vol. 2) April 1978, (Vol. 3) December 1978, (Vol. 4) March 1980.

705. Memorandum for C. Thomas from O. Parr, "CRD Accumulators - Proposed Improved Technical Specification," August 13, 1984. [8408270516]

706. NUREG-0123, "Standard Technical Specifications for General Electric Boiling Water Reactors (BWR/5)," U.S. Nuclear Regulatory Commission, (Rev. 3) December 1980.

707. Memorandum for H. Denton, et. al., from C. Michelson, "Survey of Valve Operator-Related Events Occurring During 1978, 1979, and 1980," December 23, 1981. [8202040039]

708. Memorandum for C. Michelson from H. Denton, "NRR Comments on AEOD Draft Report: Survey of Valve Operator-Related Events Occurring During 1978, 1979 and 1980," March 5, 1982. [8203240048]

709. AEOD/C203, "Survey of Valve Operator-Related Events Occurring During 1978, 1979, and 1980," Office for Analysis and Evaluation of Operational Data, U.S. Nuclear Regulatory Commission, May 1982. [8206180032]

710. Memorandum for C. Michelson from E. Brown and F. Ashe, "AEOD Assessment of Program Office Responses to the Report AEOD/C203, 'Survey of Valve Operator-Related Events Occurring During 1978, 1979, and 1980,'" December 23, 1982. [8301250189, 8301120496]

711. Memorandum for H. Denton from C. Michelson, "AEOD Assessment of Program Office Responses to AEOD Case Study (C-203), 'Survey of Valve Operator Related Events Occurring During 1978, 1979, and 1980,'" January 12, 1983. [8301250183]

712. Memorandum for C. Michelson from H. Denton, "AEOD Assessment of Program Office Responses to AEOD Case Study (C203), 'Survey of Valve Operator Related Events Occurring During 1978, 1979, and 1980,'" February 23, 1983. [8303100567]

713. Memorandum for K. Seyfrit from E. Brown and F. Ashe, "Engineering Evaluation Report AEOD/E305 Inoperable Motor Operated Valve Assemblies Due to Premature Degradation of Motors and/or Improper Limit Switch/Torque Switch Adjustment," April 13, 1983. [8305050353]

714. Memorandum for W. Minners from R. Bosnak, "Status of Potential Generic Issue 54, 'Valve Operator Related Events Occurring During 1978, 1979, and 1980,'" March 26, 1984. [8404110417]

715. Memorandum for R. Vollmer from R. Bosnak, "MEB Task Action Plan for Resolution of Generic Issue II.E.6.1, 'In Situ Testing of Valves,'" July 30, 1984. [8408070139]

716. Memorandum for D. Eisenhut from D. Muller, "PWR Reactor Cavity Uncontrolled Exposures, Generic Letter Implementing a Generic Technical Specification," July 12, 1984. [8407230356]

717. Memorandum for A. Thadani from W. Minners, "CRAC2 Computer Runs in Support of USI A-43," February 1, 1983. [8302090275]

718. Memorandum for W. Minners from F. Congel, "Prioritization of Generic Issue 97: PWR Reactor Cavity Uncontrolled Exposures," February 8, 1985. [8502250136]

719. Memorandum for H. Denton from R. Bernero, "PWR Reactor Cavity Uncontrolled Exposures," November 28, 1984. [8412180620]

720. Memorandum for T. Speis from R. Bernero, "Request for Prioritization of Generic Safety Issue - Break Plus Single Failure in BWR Water Level Instrumentation," October 10, 1984. [8410290282]

721. Memorandum for H. Denton and V. Stello from C. Michelson, "Case Study Report - Safety Concern Associated with Reactor Vessel Instrumentation in Boiling Water Reactors," September 2, 1981. [8109220940]

722. Memorandum for B. Sheron from A. Thadani, "Reactor Vessel Level Instrumentation in BWR's (Generic Issue 50)," August 2, 1984. [8408090089]

723. Memorandum for H. Denton from T. Speis, "Reactor Vessel Level Instrumentation in BWRs (Generic Issue 50)," August 2, 1984. [8408090386, 8408090094]

724. Memorandum for W. Dircks, et al., from S. Chilk, "Staff Requirements - Affirmation/Discussion and Vote, 11:30 a.m., Friday, June 1, 1984, Commissioners' Conference Room, D.C. Office (Open to Public Attendance)," June 1, 1984.

725. Federal Register Notice 49 FR 26036, "10 CFR Part 50, Reduction of Risk from Anticipated Transients Without Scram (ATWS) Events for Light-Water-Cooled Nuclear Power Plants," June 26, 1984.

726. NEDO-21506, "Stability and Dynamic Performance of the General Electric Boiling Water Reactor," General Electric Company, January 1977.

727. Memorandum for D. Crutchfield from L. Rubenstein, "Staff Evaluation of GE Topical Report NEDE-24011 (GESTAR) Amendment 8," April 17, 1985. [8504290470]

728. XN-NF-691(P)(A) & Supplement 1, "Stability Evaluation of Boiling Water Reactor Cores Sensitivity Analyses & Benchmark Analysis," Exxon Nuclear Company, Inc., August 22, 1984.

729. Memorandum for D. Eisenhut from R. Mattson, "Board Notification - BWR Core Thermal Hydraulic Stability," February 27, 1984. [8403020299]

730. Memorandum for T. Novak from L. Rubenstein, "Susquehanna 1 and 2 - Thermal Hydraulic Stability Technical Specification Change (TACS 55021 and 55022)," July 11, 1984. [8407170149]

731. Memorandum for G. Lainas from L. Rubenstein, "SER Input for Peach Bottom-3 Technical Specification Changes for Cycle 6 Operation with Increased Core Flows and Decreased Feedwater Temperatures (TACS #55123)," October 23, 1984. [8411010312]

732. NEDO-21078, "Test Results Employed by GE for BWR Containment and Vertical Vent Loads," General Electric Company, October 1975.

733. NUREG-0487, "Mark II Containment Lead Plant Program Load Evaluation and Acceptance Criteria," U.S. Nuclear Regulatory Commission, November 1978, (Supplement 1) September 1980.

734. NUREG-0783, "Suppression Pool Temperature Limits for BWR Containments," U.S. Nuclear Regulatory Commission, November 1981.

735. Letter to T. Novak (NRC) from T. Pickens (BWR Owners' Group), "Agreements from BWROG/NRC Meeting on Suppression Pool Temperature Limit," October 16, 1984. [8410220072]

736. Memorandum for T. Speis from R. Bernero, "Proposed Generic Issue 'BWR Suppression Pool Temperature Limits,'" November 21, 1984. [8412030526]

737. Memorandum for W. Minners from W. Butler, "Comments on Prioritization of Generic Issue 108, 'BWR Suppression Pool Temperature Limits,'" January 10, 1985. [8501160095]

738. NUREG-1044, "Evaluation of the Need for a Rapid Depressurization Capability for CE Plant," U.S. Nuclear Regulatory Commission, December 1984.

739. SECY-84-134, "Power Operated Relief Valves for Combustion Engineering Plants," March 23, 1984. [8404180339]

740. "Draft Maintenance Program Plan," U.S. Nuclear Regulatory Commission, May 8, 1984.

741. NUREG/CR-3543, "Survey of Operating Experience from LERs to Identify Aging Trend," U.S. Nuclear Regulatory Commission, January 1984.

742. NUREG-0619, "BWR Feedwater Nozzle and Control Rod Drive Return Line Nozzle Cracking," U.S. Nuclear Regulatory Commission, November 1980.

743. NUREG-0744, "Resolution of the Task A-11 Reactor Vessel Materials Toughness Safety Issue," U.S. Nuclear Regulatory Commission, (Rev. 1) October 1982.

744. NRC Letter to All Power Reactor Licensees (Except Ft. St. Vrain), "NUREG-0744 Rev. 1; Generic Letter No. 82-26) - Pressure Vessel Material Fracture Toughness," November 12, 1982. [8211160047]

745. EPRI NP-3967, "Classification and Analysis of Reactor Operating Experience Involving Dependent Events," Electric Power Research Institute, June 1985.

746. NUREG-0224, "Final Report on Reactor Vessel Pressure Transient Protection for Pressurized Water Reactors," U.S. Nuclear Regulatory Commission, September 1978.

747. NUREG-0612, "Control of Heavy Loads at Nuclear Power Plants Resolution of Generic Technical Activity A-36," U.S. Nuclear Regulatory Commission, July 1980.

748. NUREG-0763, "Guidelines for Confirmatory Inplant Tests of Safety Relief Valve Discharges for BWR Plants," U.S. Nuclear Regulatory Commission, May 1981.

749. NUREG-0802, "Safety/Relief Valve Quencher Loads: Evaluation for BWR Mark II and III Containments," U.S. Nuclear Regulatory Commission, October 1982.

750. NUREG-0313, "Technical Report on Material Selection and Processing Guidelines for BWR Coolant Pressure Boundary Piping," U.S. Nuclear Regulatory Commission, July 1977, (Rev. 1) July 1980, (Rev. 2) January 1988.

751. WASH-1270, "Anticipated Transients Without Scram for Water-Cooled Reactors," U.S. Atomic Energy Commission, September 1973.

752. Memorandum for S. Hanauer from D. Eisenhut, "Value/Impact Assessment of Proposed Steam Generator Generic Requirements," October 12, 1982. [8211110465]

753. SECY-84-13, "NRC Integrated Program for the Resolution of Steam Generator USI's," January 11, 1984. [8401310036]

754. NUREG-0916, "Safety Evaluation Report Related to Restart of R.E. Ginna Nuclear Power Plant," U.S. Nuclear Regulatory Commission, May 1982.

755. NUREG-0651, "Evaluation of Steam Generator Tube Rupture Events," U.S. Nuclear Regulatory Commission, March 1980.

756. Memorandum for D. Eisenhut from T. Speis, "Prioritization of Staff Actions Concerning S.G. Tube Degradation and Rupture Events," February 23, 1983. [8303090047]

757. SECY-84-13A, "NRC Integrated Program for the Resolution of Steam Generator USIs," September 7, 1984. [8409140060]

758. SECY-84-13B, "NRC Integrated Program for the Resolution of Steam Generator USI's - Response to Commissioner Comments (Memo from Chilk to Dircks dated September 13, 1984)," November 5, 1984. [8411210357]

759. AEOD/C005, "AEOD Observations and Recommendations Concerning the Problem of Steam Generator Overfill and Combined Primary and Secondary Blowdown," Office for Analysis and Evaluation of Operational Data, U.S. Nuclear Regulatory Commission, December 17, 1980. [8101150366]

760. NUREG/CR-2883, "Study of the Value and Impact of Alternative Decay Heat Removal Concepts for Light Water Reactors," U.S. Nuclear Regulatory Commission, (Vol. 1) June 1983, (Vol. 2) June 1983, (Vol. 3) June 1983.

761. AEOD/E414, "Stuck Open Isolation Check Valve on the Residual Heat Removal System at Hatch Unit 2," Office for Analysis and Evaluation of Operational Data, U.S. Nuclear Regulatory Commission, May 31, 1984. [8406190101]

762. Memorandum for W. Minners from G. Holahan, "Prioritization of Interfacing System LOCA at Boiling Water Reactors," October 25, 1984. [8411050292]

763. NUREG-0677, "The Probability of Intersystem LOCA: Impact Due to Leak Testing and Operational Changes," U.S. Nuclear Regulatory Commission, May 1980.

764. SECY-85-129, "Maintenance and Surveillance Program Plan," April 12, 1985. [8509190696]

765. SECY-85-62, "NRC Integrated Program for the Resolution of Steam Generator USI's - Response to Commissioner Comments (Memo from Chilk to Dircks Dated January 23, 1985)," February 22, 1985. [8504080388]

766. Memorandum for W. Dircks from S. Chilk, "SECY-85-62 - NRC Integrated Program for the Resolution of Steam Generator USIs - Response to Commissioners Comments (Memo from Chilk and Dircks Dated January 23, 1985)," March 15, 1985.

767. Memorandum for W. Dircks from H. Denton, "Final Rule - Applicability of License Conditions and Technical Specifications in an Emergency," February 17, 1983. [8303300333]

768. Memorandum for T. Speis from H. Denton, "Formation of a Technical Specification Improvement Project Group," December 31, 1984. [8501150417]

769. Memorandum for V. Stello from H. Denton, "Close Out Generic Issue #B-19 -Thermal-Hydraulic Stability," May 21, 1985. [8506040556]

770. Letter from P. Crane (Pacific Gas and Electric Company) to Director, Division of Licensing, U.S. Nuclear Regulatory Commission, "Report on June 7, 1975 Ferndale Earthquake," August 4, 1975. [8602070315, 993280104, ML993280111]

771. Memorandum for W. Minners from L. Reiter, "Generic Issue No. B-50 Post Operating Basis Earthquake Inspection," June 7, 1985.

772. Letter to A. Schwencer (NRC) from C. Dunn (Duquesne Light Company), "Beaver Valley Power Station, Unit No. 1, Docket No. 50-334, Request for Amendment to the Operating License - No. 35," October 27, 1978. [7811030107]

773. Letter to J. Carey (Duquesne Light Company) from S. Varga (NRC), "Beaver Valley Unit No. 1 - Operation With Two Out of Three Reactor Coolant Loops - Safety Evaluation," July 20, 1984. [8408010218]

774. Memorandum for D. Eisenhut from D. Wigginton, Closeout of MPA E-05; Westinghouse N-1 Loop Operation," January 11, 1985. [8501300565]

775. Memorandum for R. Emrit from A. Murphy, "Generic Issue Management Control System, Issue No. 119.3, Decouple OBE from SSE," February 21, 1992. [9803260147]

776. Memorandum for R. Bernero from D. Eisenhut, "BWR Thermal-Hydraulic Stability Technical Specifications," November 16, 1984. [8411290326]

777. Memorandum for W. Dircks from H. Denton, "Closeout of TMI Action Plan Items I.A.2.2 and I.A.2.7 Training and Qualifications of Operating Personnel," June 24, 1985. [8507020587]

778. Memorandum for W. Dircks from H. Denton, "TMI Action Item I.A.3.4," February 12, 1985. [8502260084]

779. Memorandum for W. Dircks from J. Taylor, "TMI Action Plan - Completed Item," June 26, 1985. [8507080034]

780. IE Information Notice No. 83-58, "Transamerica DeLaval Diesel Generator Crankshaft Failure," U.S. Nuclear Regulatory Commission, August 30, 1983. [8308040044]

781. IE Information Notice No. 83-51, "Diesel Generator Events," U.S. Nuclear Regulatory Commission, August 5, 1983. [8306270425]

782. Memorandum for C. Berlinger from H. Denton, "Detail Assignment to DOL, Transamerica DeLaval Emergency Diesel Generator Project Group (TDI Project Group)," January 25, 1984. [8505130221]

783. SECY-84-34, "Emergency Diesel Generators Manufactured by Transamerica DeLaval, Inc.," January 25, 1984. [8403010451]

784. Letter to D. Bixby (TDI) from D. Eisenhut (NRC), February 14, 1984. [8402290333]

785. TDI Diesel Generators Owners' Group Program Plan, March 2, 1984.

786. SECY-84-155, "Section 208 Report to the Congress on Abnormal Occurrences for October-December, 1983," April 11, 1984. [8405140043]

787. Letter to J. George (Transamerica Delaval, Inc., Owners' Group) from D. Eisenhut (NRC), "Safety Evaluation Report, Transamerica Delaval, Inc. Diesel Generator Owners' Group Program Plan," August 13, 1984. [8408240115]

788. Memorandum for W. Minners from B. Sheron, "Additional Low-Temperature-Overpressure Protection Issues for Light-Water Reactors," August 1, 1984. [8408130012]

789. IE Information Notice No. 83-26, "Failure of Safety/Relief Valve Discharge Line Vacuum Breakers," U.S. Nuclear Regulatory Commission, May 3, 1983. [8303040028]

790. NUREG/CR-3384, "VISA - A Computer Code for Predicting the Probability of Reactor Pressure Vessel Failure," U.S. Nuclear Regulatory Commission, September 1983.

791. Memorandum for K. Seyfrit from C. Hsu, "EE No. AEOD/E322 Damage to Vacuum Breaker Valves as a Result of Relief Valve Lifting," September 21, 1983. [8310060353]

792. AEOD/C401, "Low Temperature Overpressure Events at Turkey Point Unit 4," Office for Analysis and Evaluation of Operational Data, U.S. Nuclear Regulatory Commission, March 1984. [8404050445]

793. Memorandum for B. Sheron from B. Liaw, "Additional Low-Temperature-Overpressure Protection (LTOP) Issues for Light-Water Reactors," August 30, 1984. [8409130397]

794. Memorandum for K. Seyfrit from E. Imbro, 'Single Failure Vulnerability of Power Operated Relief Valve Actuation Circuitry for Low Temperature Overpressure Protection (LTOP)," October 24, 1984. [8411070245]

795. AEOD/C403, "Edwin I. Hatch Unit No. 2 Plant Systems Interaction Event on August 25, 1982," Office for Analysis and Evaluation of Operational Data, U.S. Nuclear Regulatory Commission, May 1984. [8405300746]

796. Memorandum for R. Mattson from T. Dunning, "RHR Interlocks for Westinghouse Plants," April 17, 1984. [8404300085]

797. Memorandum for F. Rowsome from W. Houston, "RCS/RHR Suction Line Valve Interlock on PWRs," August 27, 1984. [8409070331]

798. NSAC-52, "Residual Heat Removal Experience Review and Safety Analysis, Pressurized Water Reactor," Nuclear Safety Analysis Center, January 1983.

799. Memorandum for W. Dircks from H. Denton, "Resolution of Generic Issue III.D.2.3 -- Liquid Pathway Studies," August 28, 1985. [8509050212]

800. NUREG/CR-4258, "An Approach to Team Skills Training of Nuclear Power Plant Control Room Crews," U.S. Nuclear Regulatory Commission, July 1985.

801. Memorandum for W. Dircks from H. Denton, "Team Training for Nuclear Power Plant Control Room Crews," July 10, 1985. [8507220495]

802. NUREG/CR-3739, "The Operator Feedback Workshop: A Technique for Obtaining Feedback from Operations Personnel," U.S. Nuclear Regulatory Commission, September 1984.

803. NUREG/CR-4139, "The Mailed Survey: A Technique for Obtaining Feedback from Operations Personnel," U.S. Nuclear Regulatory Commission, May 1985.

804. Memorandum for W. Dircks from H. Denton, "TMI Action Plan Item I.A.2.6(4)," September 25, 1985. [8510030079]

805. Memorandum for T. Combs from H. Denton, "Revised SRP Section 13.5.2 and Appendix A to SRP Section 13.5.2 of NUREG-0800," July 17, 1985. [8508050283]

806. Memorandum for W. Dircks from H. Denton, "Closeout of TMI Action Plan, Task II.B.6, 'Risk Reduction for Operating Reactors at Sites With High Population Densities,'" September 25, 1985. [8510030342]

807. Memorandum for W. Dircks from R. Minogue, "Closeout of TMI Action Plan Task II.B.8 'Rulemaking Proceeding on Degraded Core Accidents - Hydrogen Control,'" July 19, 1985. [8508010066]

808. Memorandum for W. Dircks from H. Denton, "Close Out of TMI Action Plan, Task II.B.8," August 12, 1985. [8508210316]

809. NUREG-1070, "NRC Policy on Future Reactor Designs," U.S. Nuclear Regulatory Commission, July 1985.

810. NUREG/CR-3085, "Interim Reliability Evaluation Program: Analysis of the Millstone Point Unit 1 Nuclear Power Plant," U.S. Nuclear Regulatory Commission, (Vol. 1) April 1983, (Vol. 2) August 1983, (Vol. 3) July 1983, (Vol. 4) July 1983.

811. NUREG/CR-3511, "Interim Reliability Evaluation Program: Analysis of the Calvert Cliffs Unit 1 Nuclear Power Plant," U.S. Nuclear Regulatory Commission, (Vol. 1) May 1984, (Vol. 2) October 1984.

812. NUREG/CR-2728, "Interim Reliability Evaluation Program Procedures Guide," U.S. Nuclear Regulatory Commission, March 1983.

813. Memorandum for W. Dircks from R. Minogue, "Closeout of TMI Action Plan, Task II.C.1, 'Interim Reliability Evaluation Program,'" July 9, 1985. [8507180593]

814. SECY-84-133, "Integrated Safety Assessment Program (ISAP)," March 23, 1984. [8404100072]

815. SECY-85-160, "Integrated Safety Assessment Program - Implementation Plan," May 6, 1985. [8505230571]

816. Memorandum for W. Dircks from H. Denton, "Close-out of Generic Issues II.C.2, 'Continuation of IREP,' and IV.E.5, 'Assess Currently Operating Reactors,'" September 25, 1985. [9909290069]

817. Memorandum for W. Dircks from R. Minogue, "Closeout of TMI Action Plan Task II.E.2.2, 'Research on Small Break LOCA's and Anomalous Transients,'" July 25, 1985. [9909290072]

818. Memorandum for W. Dircks from J. Taylor, "TMI Action Plan - Completed Item," August 15, 1985. [8508200726]

819. EPRI EL-3209, "Workshop Proceedings: Retaining Rings for Electric Generators," Electric Power Research Institute, August 1983.

820. Memorandum for R. Fraley from R. Vollmer, "Proposed NRR Revisions to Review Procedures for Turbine Missile Issue," May 12, 1983. [8305250286]

821. Memorandum for W. Johnson from T. Novak, "Midland SSER #3 - Turbine Missile Review," November 1, 1983. [8311140470]

822. Memorandum for V. Stello from H. Denton, "NRR Plans for Approval of WCAP-10271," January 11, 1985. [8501220433, 8501220440]

823. Letter to J. Sheppard (Westinghouse Owners Group) from C. Thomas (NRC), "Acceptance for Referencing of Licensing Topical Report WCAP-10271, 'Evaluation of Surveillance Frequencies and Out of Service Times for the Reactor Protection Instrumentation Systems,'" February 21, 1985. [8503010427]

824. Memorandum for T. Speis from R. Mattson, "Request for Prioritization of Generic Safety Issue - Failure of HPCI Steam Line Without Isolation," October 18, 1983. [8311020209]

825. Memorandum for K. Seyfrit from P. Lam, "Failure of an Isolation Valve of the Reactor Core Isolation Cooling System to Open Against Operating Reactor Pressure," August 23, 1984. [8411010554, 8411010453]

826. Letter to A. Schwencer (NRC) from J. Kemper (Philadelphia Electric Company), "Limerick Generating Station, Units 1 & 2, Request for Additional Information from NRC Equipment Qualification Branch (EQB)," February 27, 1984. [9909290076]

827. NEDO-24708A, "Additional Information Required for NRC Staff Generic Report on Boiling Water Reactors," General Electric Company, August 1979 [7909130302, 7909130304], December 1980.

828. NUREG/CR-3933, "Risk Related Reliability Requirements for BWR Safety-Important Systems with Emphasis on the Residual Heat Removal System," U.S. Nuclear Regulatory Commission, August 1984.

829. "An Evaluation of Unisolated LOCA Outside the Drywell in the Shoreham Nuclear Power Station," Brookhaven National Laboratory, June 1985. [9909290080]

830. Memorandum for W. Minners from A. Thadani, "Comments on Generic Issue No. 87 - Failure of HPCI Steam Line Without Isolation," June 28, 1985. [8507170422]

831. NUREG/CR-1433, "Examination of the Use of Potassium Iodide (KI) as an Emergency Protective Measure for Nuclear Reactor Accidents," U.S. Nuclear Regulatory Commission, October 1980.

832. SECY-83-362, "Emergency Planning - Predistribution/Stockpiling of Potassium Iodide for the General Public," August 30, 1983. [8309080120]

833. SECY-85-167, "Federal Policy Statement on the Distribution and Use of Potassium Iodide," May 13, 1985. [8505310621]

834. Memorandum for H. Denton and R. Minogue from W. Dircks, "Review of NRC Requirements for Nuclear Power Plant Piping," August 1, 1983. [8308300212]

835. Memorandum for W. Dircks from R. Minogue, "Plan to Implement Piping Review Committee Recommendations," July 30, 1985. [9705050005]

836. Memorandum for T. Murley, et al., from J. Taylor, "Results of Regional Survey of Plant Specific Information Relating to the Potential for Uncontrolled Radiation Exposures in PWR Reactor Cavities," June 18, 1985. [8506250113]

837. Note to R. Vollmer from T. Speis, "Proposed Request to Perform Research on the Stress Corrosion Cracking of Pressure Boundary Ferritic Steels in Selected Environments," January 7, 1985. [9909290082]

838. NUREG-1165, "Environmental Standard Review Plan for ES Section 7.1.1," U.S. Nuclear Regulatory Commission, November 1985.

839. Letter to J. Bayne (PASNY) from S. Varga (NRC), "Steam Generator Tube and Girth Weld Repairs at the Indian Point Nuclear Generating Plant, Unit No. 3 (IP-3)," May 27, 1983. [8306150627]

840. "Value-Impact Analysis of Recommendations Concerning Steam Generator Tube Degradations and Rupture Events," Science Applications, Inc., February 2, 1983.

841. Regulatory Guide 1.99, "Effects of Residual Elements on Predicted Radiation Damage to Reactor Vessel Materials," U.S. Nuclear Regulatory Commission, July 1975, (Rev. 1) April 1977 [7907100362], (Rev. 2) May 1988 [8907270187].

842. IE Information Notice No. 82-37, "Cracking in the Upper Shell to Transition Cone Girth Weld of a Steam Generator at an Operating Pressurized Water Reactor," U.S. Nuclear Regulatory Commission, September 16, 1982. [8208190220]

843. Letter to D. Smith (NRC) from E. Rahe (Westinghouse), January 17, 1982. [9909290085]

844. NUREG/CR-3281, "Investigation of Shell Cracking on the Steam Generators at Indian Point Unit No. 3," U.S. Nuclear Regulatory Commission, June 1983.

845. NUREG/CR-3614, "Constant Extension Rate Testing of SA302 Grade B Material in Neutral and Chloride Solutions," U.S. Nuclear Regulatory Commission, February 1984.

846. Letter to W. Hazelton (NRC) from H. Watanabe (GE), "'Laboratory Examination of Garigliano Secondary Steam Generator-B Core Samples,' NEDE-25162, July 1979," December 13, 1979. [7912130566]

847. EPRI NP-1136, "Limiting Factor Analysis of High Availability Nuclear Plants (Boiling Water Reactors)," Electric Power Research Institute, (Vol. 1) August 1979.

848. Regulatory Guide 1.56, "Maintenance of Water Purity in Boiling Water Reactors," U.S. Nuclear Regulatory Commission, (Rev. 1) July 1978.

849. NUREG/CR-3842, "Steam Generator Group Project Task 8 - Selective Tube Unplugging," U.S. Nuclear Regulator Commission, July 1984.

850. NRC Letter to All PWR Licensees of Operating Reactors, Applicants for Operating Licenses, and Holders of Construction Permits, and Ft. St. Vrain, "Staff Recommended Actions Stemming from NRC Integrated Program for the Resolution of Unresolved Safety Issues Regarding Steam Generator Tube Integrity (Generic Letter 85-02)," April 17, 1985. [8504120031]

851. NUREG/CP-0058, "Twelfth Water Reactor Safety Research Information Meeting," U.S. Nuclear Regulatory Commission, (Vol. 4) January 1985.

852. NUREG/CP-0044, "Proceedings of the International Atomic Energy Agency Specialists' Meeting on Subcritical Crack Growth," U.S. Nuclear Regulatory Commission, (Vol. 1) May 1983, (Vol. 2) May 1983.

853. "Corrosion Fatigue Crack Growth in Reactor Pressure Vessel Steels - Structural Integrity of Light Water Reactor Components," Scott, P. et al., Elsevier Science Publishing Co., Inc., 1982.

854. NUREG/CR-4121, "The Effects of Sulfur Chemistry and Flow Rate on Fatigue Crack Growth Rates in LWR Environments," U.S. Nuclear Regulatory Commission, February 1985.

855. NUREG-0975, "Compilation of Contract Research for the Materials Engineering Branch, Division of Engineering Technology," U.S. Nuclear Regulatory Commission, (Vol. 2) March 1984.

856. PNO-II-85-41, "Small Steam Generator Surface Cracks," U.S. Nuclear Regulatory Commission, April 23, 1985. [8504290412]

857. Memorandum for W. Minners from B. Liaw, "Prioritization of Generic Issue No. (111) Stress Corrosion Cracking of RCPB Ferritic Steels and Steam Generator Vessels," June 7, 1985. [8506170320]

858. IE Information Notice No. 85-65, "Crack Growth in Steam Generator Girth Welds," U.S. Nuclear Regulatory Commission, July 31, 1985. [8507290456]

859. Memorandum for H. Thompson from J. Knight, "Steam Generator Shell Transition Joint Cracking," July 10, 1985. [8507190409]

860. NUREG-0937, "Evaluation of PWR Response to Main Steamline Break With Concurrent Steam Generator Tube Rupture and Small-Break LOCA," U.S. Nuclear Regulatory Commission, December 1982. [8412190335]

861. SECY-83-357B, "Status of Hydrogen Control Issue and Rulemaking Recommendations in SECY-83-357A," December 3, 1984. [8412190335]

862. IE Bulletin No. 79-13, "Cracking in Feedwater System Piping," June 25, 1979 [7906250348], (Rev. 1) August 29, 1979 [7908220101], (Rev. 2) October 17, 1979 [7908220135].

863. Memorandum for T. Speis from H. Denton, "Closeout of Generic Issues B-58 and C-11," July 9, 1985. [8507180530]

864. AEOD/C301, "Failures of Class 1E Safety-Related Switchgear Circuit Breakers to Close on Demand," Office for Analysis and Evaluation of Operational Data, U.S. Nuclear Regulatory Commission, April 1983. [8305230531]

865. Memorandum for T. Speis from H. Denton, "Resolution of Generic Issue 14, 'PWR Pipe Cracks,'" October 4, 1985. [9909290092]

866. Federal Register Notice 47 FR 7023, "Proposed Policy Statement on Safety Goals for Nuclear Power Plants," February 17, 1982.

867. Federal Register Notice 48 FR 10772, "Safety Goal Development Program," March 14, 1983.

868. Letter to J. Ahearne from M. Plesset, "Recommendations of President's Commission on ACRS Role," January 15, 1980. [8002150071]

869. Federal Register Notice 46 FR 22358, "10 CFR Part 2, ACRS Participation in NRC Rulemaking," April 17, 1981.

870. Memorandum for Commissioner Ahearne, et al., from L. Bickwit, et al., "TMI Action Plan, Chapter V, Formal Procedures for Ensuring Periodic Public Interaction," October 2, 1980.

871. Memorandum for W. Dircks, et al., from J. Hoyle, "Staff Requirements - Discussion of Action Plan, Chapter V (See SECY-80-230B), 2:00 p.m. Monday, July 7, 1980, Commissioners' Conference Room, D.C. Office (Open to Public Attendance)," July 9, 1980. [8012030928]

872. Federal Register Notice 45 FR 49535, "10 CFR Part 2, Procedural Assistance in Adjudicatory Licensing Proceedings," July 25, 1980.

873. Federal Register Notice 46 FR 13681, "10 CFR Part 2, Domestic Licensing Proceedings; Procedural Assistance Program," February 24, 1981.

874. Memorandum for L. Bickwit from S. Chilk, "SECY-81-391 - Provision of Free Transcripts to All Full Participants in Adjudicatory Proceedings: May 11, 1981 Comptroller General Decision," February 25, 1982.

875. Federal Register Notice 45 FR 34279, "10 CFR Parts 2, 50, Possible Amendments to 'Immediate Effectiveness Rule,'" May 22, 1980.

876. Federal Register Notice 47 FR 47260, "10 CFR Part 2, Commission Review Procedures for Power Reactor Construction Permits; Immediate Effectiveness Rule," October 25, 1982.

877. Federal Register Notice 51 FR 10393, "10 CFR Parts 0 and 2, Revision of Ex Parte and Separation of Functions Rules Applicable to Formal Adjudicatory Proceedings," March 26, 1986.

878. NUREG-0632, "NRC Views and Analysis of the Recommendations of the President's Commission on the Accident at Three Mile Island," U.S. Nuclear Regulatory Commission, November 1979.

879. Federal Register Notice 46 FR 28533, "Statement of Policy on Conduct of Licensing Proceedings," May 27, 1981.

880. Memorandum to All Employees from N. Palladino, "Regulatory Reform Task Force," November 17, 1981.

881. Letter to the Honorable Thomas P. O'Neill, Jr. from N. Palladino, February 21, 1983.

882. Federal Register Notice 48 FR 44173, "10 CFR Part 50, Revision of Backfitting Process for Power Reactors," September 28, 1983.

883. Federal Register Notice 48 FR 44217, "10 CFR Part 50, Revision of Backfitting Process for Power Reactors," September 28, 1983.

884. Federal Register Notice 50 FR 38097, "10 CFR Parts 2 and 50, Revision of Backfitting Process for Power Reactors," September 20, 1985.

885. Memorandum for H. Thompson from D. Crutchfield, "Potential Immediate Generic Actions as a Result of the Davis-Besse Event of June 9, 1985," August 5, 1985. [8508090679]

886. NUREG-1154, "Loss of Main and Auxiliary Feedwater Event at the Davis-Besse Plant on June 9, 1985," U.S. Nuclear Regulatory Commission, July 1985.

887. Memorandum for T. Speis from H. Thompson, "Short Term Generic Actions as a Result of the Davis-Besse Event of June 9, 1985," August 19, 1985. [8508270246]

888. Memorandum for H. Denton from T. Speis, "Adequacy of the Auxiliary Feedwater System at Davis-Besse," July 23, 1985. [8508010086]

889. NSAC-60, "A Probabilistic Risk Assessment of Oconee Unit 3," Electric Power Research Institute, June 1984.

890. NUREG-1032, "Evaluation of Station Blackout Accidents at Nuclear Power Plants," U.S. Nuclear Regulatory Commission, June 1988.

891. Letter to T. Novak (NRC) from R. Crouse (Toledo Edison Company), December 31, 1981. [8201060607]

892. NUREG/CR-2770, "Common Cause Fault Rates for Valves," U.S. Nuclear Regulatory Commission, February 1983.

893. NUREG/CR-2098, "Common Cause Fault Rates for Pumps," U.S. Nuclear Regulatory Commission, February 1983.

894. Memorandum for O. Parr from A. Thadani, "Auxiliary Feedwater System - CRGR Package," November 9, 1984. [8411280233]

895. Memorandum for H. Denton, et al., from W. Dircks, "Staff Actions Resulting from the Investigation of the June 9 Davis-Besse Event (NUREG-1154)," August 5, 1985. [8508090534]

896. SECY-86-56, "Status of Staff Study to Determine if PORVs Should be Safety Grade," February 18, 1986. [8611100428]

897. Memorandum for G. Lainas from F. Rowsome, "Safety Evaluation of the CE Licensees' Responses to TMI Action Item II.K.3.2," August 26, 1983. [8309060394]

898. Memorandum for G. Lainas from F. Rowsome, "Safety Evaluation of the B&W Licensees' Responses to TMI Action Item II.K.3.2," August 24, 1983. [8308310422]

899. Memorandum for G. Lainas from F. Rowsome, "Safety Evaluation of the Westinghouse Licensees' Responses to TMI Action Item II.K.3.2," July 22, 1983. [8308040054]

900. Memorandum for H. Thompson from W. Russell, "Comments on Draft List of Longer Term Generic Actions as a Result of the Davis-Besse Event of June 9, 1985," September 19, 1985. [8509240326]

901. Memorandum for T. Combs from H. Denton, "Revised SRP Section 9.2.1 and SRP Section 9.2.2 of NUREG-0800," June 24, 1986. [8607080481]

902. Memorandum for J. Sniezek and R. Fraley from H. Denton, "Resolution of Generic Issue No. 36, 'Loss of Service Water,'" May 13, 1986. [8605300159]

903. Memorandum for T. Speis from H. Denton, "Resolution of Generic Issue 3, 'Setpoint Drift in Instrumentation,'" May 19, 1986. [8606110638]

904. SECY-83-293, "Amendments to 10 CFR 50 Related to Anticipated Transients Without Scram (ATWS) Events," July 9, 1983. [8308080642]

905. Memorandum for T. Speis from R. Bernero, "Enhancement of the Reliability of Westinghouse Solid State Protection System (SSPS)," April 5, 1985. [8504160610]

906. NUREG/CR-3971, "A Handbook for Cost Estimating," U.S. Nuclear Regulatory Commission, October 1984.

907. Memorandum for W. Minners from B. Sheron, "Generic Issues C-4, C-5, C-6," May 29, 1985. [8506100882]

908. SECY-83-472, "Emergency Core Cooling System Analysis Methods," November 17, 1983. [8401060169]

909. AEOD/C503, "Decay Heat Removal Problems at U.S. Pressurized Water Reactors," Office for Analysis and Evaluation of Operational Data, U.S. Nuclear Regulatory Commission, December 1985. [8601060316]

910. Memorandum for H. Denton from C. Heltemes, "Case Study Report - Decay Heat Removal Problems at U.S. Pressurized Water Reactors," December 23, 1985. [8601060315]

911. Memorandum for C. Heltemes from H. Denton, "AEOD's Report on Decay Heat Removal Problems at U.S. PWRs," February 10, 1986. [8602200004]

912. Memorandum to T. Murley, et al., from H. Denton, "Evaluation of Industry Success in Achieving ALARA-Integrated Radiation Protection Plans - Data Trend Assessments," May 19, 1986.

913. Memorandum for V. Stello from H. Denton, "Resolution of Generic Issue III.D.3.1, 'Radiation Protection Plans,'" May 19, 1986.

914. Memorandum for H. Thompson and T. Speis from R. Bernero, "Request for Comments on Draft CRGR Package with Requirements for Upgrading Auxiliary Feedwater Systems in Certain Operating Plants," October 3, 1985. [8510090228]

915. Memorandum for W. Minners from A. Thadani, "Seismic Induced Relay Chatter Issue," March 22, 1985.

916. Regulatory Guide 1.29, "Seismic Design Classification," U.S. Nuclear Regulatory Commission, June 1972, (Rev. 1) August 1973 [8003280778], (Rev. 2) February 1976, (Rev. 3) September 1978 [7810030052].

917. Regulatory Guide 1.100, "Seismic Qualification of Electrical Equipment for Nuclear Power Plants," U.S. Nuclear Regulatory Commission, March 1976, (Rev. 1) August 1977.

918. NUREG/CP-0070, "Proceeding of the Workshop on Seismic and Dynamic Fragility of Nuclear Power Plant Components," U.S. Nuclear Regulatory Commission, August 1985.

919. NUREG-1030, "Seismic Qualification of Equipment in Operating Nuclear Power Plants," U.S. Nuclear Regulatory Commission, February 1987.

920. ANSI/ANS 5.1, "Decay Heat Power in Light Water Reactors," American National Standards Institute, 1979.

921. Letter to the Honorable Morris K. Udall from Joseph M. Hendrie, August 7, 1978. [7901030172, 8001230259]

922. Letter to Joseph Hendrie from Morris K. Udall, January 27, 1978. [8007210279, 8007180431]

923. Memorandum for J. Taylor from D. Morrison, "Resolution of Generic Safety Issue 15, 'Radiation Effects on Reactor Vessel Supports,'" May 29, 1996. [9606190081]

924. SECY-96-107, "Uniform Tracking of Agency Generic Technical Issues," May 14, 1996. [9605230140]

925. Memorandum for E. Beckjord from T. Murley, "Regulatory Guide 1.44," April 30, 1992. [9205110015]

926. Memorandum for Record from E. McGregor, "SECY-80-366 - NRC Legislative Program for 97th Congress," April 8, 1981.

927. Memorandum for Chairman Palladino, et al., from A. Kenneke, "TMI Action Plan, Chapter V," May 18, 1984.

928. Memorandum for A. Thadani from T. Speis, "Generic Safety Issue (GSI)-166, 'Adequacy of Fatigue Life of Metal Components,'" August 26, 1996. [9808210022]

929. Regulatory Guide 1.139, "Guidance for Residual Heat Removal," U.S. Nuclear Regulatory Commission, May 1978.

930. NUREG-0957, "The Price-Anderson Act - The Third Decade," U.S. Nuclear Regulatory Commission, December 1983.

931. NUREG-0689, "Potential Impact of Licensee Default on Cleanup of TMI-2," U.S. Nuclear Regulatory Commission, November 1980.

932. SECY-83-64A, "10 CFR 140: Proposed Rule to Revise the Criteria for Determination of an Extraordinary Nuclear Occurrence," August 9, 1983. [8308250291]

933. Memorandum for A. Kenneke from W. Olmstead, "Chapter 5 of TMI Action Plan," March 16, 1984. [8404040211]

934. Letter to the Honorable Alan Simpson from Joseph Hendrie, March 24, 1981. [8104030556]

935. NUREG/CR-1368, "Development of a Checklist for Evaluating Maintenance, Test and Calibration Procedures Used in Nuclear Power Plants," U.S. Nuclear Regulatory Commission, May 1980.

936. NUREG/CR-1369, "Procedures Evaluation Checklist for Maintenance, Test and Calibration Procedures," U.S. Nuclear Regulatory Commission, May 1980.

937. Memorandum for Chairman Ahearne from W. Dircks, "Manual Chapters Delegation of Authority to Staff Office Directors," December 23, 1980.

938. SECY-80-497, "Review of Delegations of Authority and Other Documentation," November 10, 1980. [8011190612]

939. Federal Register Notice 51 FR 28044, "Safety Goals for the Operations of Nuclear Power Plants," August 4, 1986.

940. Memorandum for T. Speis from H. Thompson, "Longer-Term Generic Actions as a Result of the Davis-Besse Event of June 9, 1985," November 6, 1985. [8511120162]

941. Memorandum for B. Morris from D. Basdekas, "Concerns Related to the Davis-Besse Incident on June 9, 1985," August 13, 1985. [8508230349]

942. Memorandum for F. Gillespie from D. Basdekas, "Concerns Related to the Davis-Besse Incident on June 9, 1985," September 27, 1985. [9909290115]

943. Memorandum for A. DeAgazio from D. Crutchfield, "Davis-Besse Restart Safety Evaluation (TAC No. 59702)," December 17, 1985. [8512230373]

944. Letter to G. Ogeka (BNL) from T. Speis (NRC), "BNL Technical Assistance to the Division of Safety Review and Oversight, Office of Nuclear Reactor Regulation, NRC - 'Reduction of Risk Uncertainty' (FIN A-3846)," April 28, 1986. [9909290117]

945. Memorandum for K. Kniel from R. Riggs, "OTSG Thermal Stress (GI-125.II.4)," June 17, 1986. [8608070348]

946. Memorandum for H. Thompson from R. Bernero, "Auxiliary Feedwater Systems," August 23, 1985. [8509030040]

947. Memorandum for B. Boger from A. Gody, "Implementation of the Resolution for Generic Issue 142, 'Leakage Through Electrical Isolators,'" May 28, 1993. [9803260145]

948. Memorandum for H. Thompson from G. Edison, "Recommendation for Longer Term Generic Action as a Result of Davis-Besse Event of June 9, 1985," September 11, 1985. [9909290121]

949. Memorandum for F. Miraglia from G. Edison, "Prioritization of Generic Issue 125.II.I.D," April 25, 1986. [8605050358]

950. BAW-1919, "B&W Owners' Group Trip Reduction and Transient Response Improvement Program," May 31, 1986. [8606020079, 8605190153]

951. Memorandum for H. Thompson and W. Minners from F. Rowsome, "Another Generic Safety Issue Suggested by the Davis-Besse Incident of June 9, 1985," September 9, 1985. [8509110328]

952. Memorandum for W. Minners from K. Kniel, "Value/Impact Assessment for Draft CRGR Package Requiring Upgrading of Auxiliary Feedwater Systems in Certain Operating Plants," January 16, 1986. [8601240311]

953. Memorandum for G. Mazetis from A. Marchese, "Revised Outline of Regulatory Analysis for USI A-45," January 14, 1986. [9909290124]

954. Memorandum for V. Stello from E. Beckjord, "Closeout of TMI Action Plan Items," November 13, 1986.

955. Memorandum for W. Dircks from H. Denton, "Close Out of Completed TMI Action Plan Item I.C.9, 'Long-Term Program Plan for Upgrading of Procedures,'" June 7, 1985. [8506200155]

956. Memorandum for V. Stello from H. Denton, "Close-out of the Division of Human Factors Technology TMI Action Plan Items," January 6, 1987. [8701140115]

957. Federal Register Notice 49 FR 46428, "10 CFR Parts 50 and 55, Operator's Licenses and Conforming Amendment," November 26, 1984.

958. Memorandum for T. Speis from T. Novak, "Need for Oversight Guidance - Byron 2-Pump Service Water Issue and Related Generic Issues," May 6, 1986. [8605130362]

959. EGG-EA-5524, "Data Summaries of Licensee Event Reports of Pumps at U.S. Commercial Nuclear Power Plants from January 1, 1972, to September 30, 1980," Idaho National Engineering Laboratory, September 1981.

960. Letter to D. Ericson (Sandia National Laboratories) from J. Mulligan (United Engineers & Constructors), "Decay Heat Removal Systems Evaluations Feasibility and Cost Evaluations of Special Issues Related to Decay Heat Removal," January 20, 1986. [9910200312]

961. NUREG/CR-4627, "Generic Cost Estimates," U.S. Nuclear Regulatory Commission, June 1986, (Rev. 1) February 1989, (Rev. 2) February 1992.

962. NUREG-1021, "Operator Licensing Examiner Standards," U.S. Nuclear Regulatory Commission, October 1983.

963. SECY-85-21, "Policy Statement on Fitness for Duty of Nuclear Power Plant Personnel," January 17, 1985. [8502280427]

964. SECY-85-21A, "Withdrawal Notice: Fitness for Duty of Nuclear Power Plant Personnel," April 12, 1985. [8505030703]

965. SECY-85-21B, "Fitness for Duty of Nuclear Power Plant Personnel," August 26, 1985. [8510150472]

966. Federal Register Notice 50 FR 11147, "10 CFR Ch. 1, Commission Policy Statement on Training and Qualification of Nuclear Power Plant Personnel," March 20, 1985.

967. Federal Register Notice 51 FR 27921, "Commission Policy Statement on Fitness for Duty of Nuclear Power Plant Personnel," August 4, 1986.

968. Memorandum for J. Roe from R. Minogue, "Nuclear Plant Analyzer (NPA) Management Plan," December 12, 1985. [9909290129]

969. NUREG/CR-3403, "Criteria and Test Method for Certifying Air-Purifying Respirator Cartridges and Canisters Against Radioiodine," U.S. Nuclear Regulatory Commission, November 1983.

970. NUREG/CR-3568, "A Handbook for Value-Impact Assessment," U.S. Nuclear Regulatory Commission, December 1983.

971. NUREG/CR-4330, "Review of Light Water Reactor Regulatory Requirements," U.S. Nuclear Regulatory Commission, (Vol. 1) April 1986, (Vol. 2) June 1986.

972. SECY-80-230B, "Update of Chapter V of TMI Action Plan: NRC Policy, Organization, and Management," June 20, 1980. [8009160065]

973. Memorandum for T. Speis from W. Minners, "Schedule for Resolving Generic Issue No. 125.II.1.b, 'Review Existing AFW Systems for Single Failure,'" December 10, 1986. [8612180094]

974. NUREG-1122, "Knowledges and Abilities Catalog for Nuclear Power Plant Operators: Pressurized Water Reactors," U.S. Nuclear Regulatory Commission, July 1985.

975. IE Circular No. 80-02, "Nuclear Power Plant Staff Work Hours," U.S. Nuclear Regulatory Commission, February 1, 1980. [7912190657]

976. NRC Letter to All Licensees of Operating Plants and Applicants for Operating Licenses and Holders of Construction Permits, "Interim Criteria for Shift Staffing (Generic Letter 80-72)," July 31, 1980. [8009020297]

977. Federal Register Notice 47 FR 7352, "Nuclear Power Plant Staff Working Hours," February 18, 1982.

978. Federal Register Notice 47 FR 23836, "Nuclear Power Plant Staff Working Hours," June 1, 1982.

979. NRC Letter to All Licensees of Operating Plants, Applicants for an Operating License, and Holders of Construction Permits, "Nuclear Power Plant Staff Working Hours (Generic Letter No. 82-12)," June 15, 1982. [8206160341]

980. NRC Letter to All Pressurized Power Reactor Licensees, "NUREG-0737 Technical Specifications (Generic Letter No. 82-16)," September 20, 1982. [8209210027]

981. NRC Letter to All Boiling Water Reactor Licensees, "NUREG-0737 Technical Specifications (Generic Letter No. 83-02)," January 10, 1983. [8301110134]

982. NRC Letter to All Licensees of Operating Plants, Applicants for Operating Licenses, and Holders of Construction Permits, "Definition of 'Key Maintenance Personnel,' Clarification of Generic Letter 82-12 (Generic Letter 83-14)," March 7, 1983. [8303040005]

983. Memorandum for W. Dircks from J. Hoyle, "Updating NRC Policy Statements," September 30, 1985. [8611190084]

984. Memorandum for J. Tourtelotte, et al., from S. Chilk, "Addendum to SRM M841218 - Briefing and Discussion on the Hearing Process, 2:00 p.m., Tuesday, December 18, 1984, Commissioners' Conference Room, D.C. Office (Open to Public Attendance)," January 31, 1985. [8502060511]

985. Federal Register Notice 48 FR 50550, "10 CFR Part 2, Rules of Practice for Domestic Licensing Proceedings; Role of NRC Staff in Adjudicatory Licensing Hearings," November 2, 1983.

986. Federal Register Notice 51 FR 36811, "10 CFR Part 2, Rules of Practice for Domestic Licensing Proceedings; Role of NRC Staff in Adjudicatory Licensing Hearings," October 16, 1986.

987. Federal Register Notice 49 FR 14698, "10 CFR Parts 2 and 50, Request for Public Comment on Regulatory Reform Proposal Concerning the Rules of Practice, Rules for Licensing of Production and Utilization Facilities," April 12, 1984.

988. Federal Register Notice 51 FR 24365, "10 CFR Part 2, Rules of Practice for Domestic Licensing Proceedings - Procedural Changes in the Hearing Process," July 3, 1986.

989. Federal Register Notice 50 FR 13978, "10 CFR Part 140, Criteria for an Extraordinary Nuclear Occurrence," April 9, 1985.

990. Memorandum for J. Funches from F. Rowsome, "Handling of DHFT Issues in GIMCS," June 6, 1986. [8606120789]

991. Memorandum for T. Speis from R. Bernero, "Resolution of Comment No. 9 of CRGR/OIA Issues on Potential Generic Concerns Regarding BWR Drywell Coolers," July 31, 1986. [8608190656]

992. Federal Register Notice 50 FR 42145, "10 CFR Part 1, Statement of Organization and General Information," October 18, 1985.

993. NUREG-1220, "Training Review Criteria and Procedures," U.S. Nuclear Regulatory Commission, July 1986.

994. Federal Register Notice 48 FR 31611, "10 CFR Part 50, Licensed Operator Staffing at Nuclear Power Plants," July 11, 1983.

995. Regulatory Guide 1.114, "Guidance on Being Operator at the Controls of a Nuclear Power Plant," U.S. Nuclear Regulatory Commission, February 1976 [8012110846], (Rev. 1) November 1976 [8307070393], (Rev. 2) May 1989 [8906200342].

996. Federal Register Notice 50 FR 43621, "Commission Policy Statement on Engineering Expertise on Shift," October 28, 1985.

997. Memorandum for W. Dircks from H. Denton, "Human Factors Program Plan (HFPP)," December 6, 1984. [8501080482]

998. Memorandum for T. Speis from H. Denton, "Resolution of Generic Safety Issue 61, 'SRV Line Break Inside the Wetwell Airspace of Mark I and II Containments,'" August 8, 1986. [8608180209]

999. NUREG/CR-4594, "Estimated Safety Significance of Generic Safety Issue 61," U.S. Nuclear Regulatory Commission, June 1986.

1000. Memorandum for T. Speis, et al., from R. Mattson, "Generic Issue 23, 'Reactor Coolant Pump Seal Failures' - Task Action Plan," October 26, 1983. [8311080469]

1001. Memorandum for H. Denton from T. Speis, "Integration of Electrical Power Issues into Proposed Generic Issue 128, 'Electrical Power Reliability,'" November 28, 1986. [8612080528]

1002. Memorandum for H. Clayton from B. Sheron, "Criteria for Initiating Feed and Bleed," September 13, 1985. [8509180314]

1003. Memorandum for W. Russell from K. Perkins, "Generic Issue 125.I.8, 'Procedures and Staffing for Reporting to NRC Operations Center,'" November 25, 1986. [8612050442]

1004. Memorandum for G. Lainas and D. Crutchfield from F. Rowsome, "Davis-Besse Restart Considerations," August 13, 1985. [8508210208]

1005. Memorandum for V. Stello from D. Ward, "ACRS Comments on Proposed Resolution of Generic Issue 124, 'Auxiliary Feedwater System Reliability,'" September 17, 1986. [8609230137]

1006. NUREG-1195, "Loss of Integrated Control System Power and Overcooling Transient at Rancho Seco on December 26, 1985," U.S. Nuclear Regulatory Commission, February 1986.

1007. Memorandum for T. Speis from F. Miraglia, "Generic Action as a Result of the Rancho Seco Event of December 26, 1985," May 14, 1986. [8605200493]

1008. Memorandum for E. Jordan from G. Holahan, "Proposed IE Information Notice," June 6, 1986. [8606110821]

1009. NUREG/CR-4568, "A Handbook for Quick Cost Estimates," U.S. Nuclear Regulatory Commission, April 1986.

1010. IE Information Notice No. 86-61, "Failure of Auxiliary Feedwater Manual Isolation Valve," U.S. Nuclear Regulatory Commission, July 28, 1986. [8607240026]

1011. NUREG-1177, "Safety Evaluation Report Related to the Restart of Davis-Besse Nuclear Power Station, Unit 1, Following the Event of June 9, 1985," U.S. Nuclear Regulatory Commission, June 1986.

1012. Federal Register Notice 50 FR 29937, "10 CFR Part 50, Analysis of Potential Pressurized Thermal Shock Events," July 23, 1985.

1013. NUREG-1212, "Status of Maintenance in the U.S. Nuclear Power Industry 1985," U.S. Nuclear Regulatory Commission, (Volumes 1 and 2), June 1986.

1014. Memorandum for F. Schroeder from D. Crutchfield, "Dynamic Qualification Testing of Large Bore Hydraulic Snubbers," March 6, 1985. [8503180471]

1015. Memorandum for R. DeYoung, et al., from C. Heltemes, "Failure of Large Hydraulic Snubbers to Lock-up," September 21, 1984. [8410290312, 8410290114]

1016. NUREG/CR-4334, "An Approach to the Quantification of Seismic Margins in Nuclear Power Plants," U.S. Nuclear Regulatory Commission, August 1985.

1017. NUREG/CR-4279, "Aging and Service Wear of Hydraulic and Mechanical Snubbers Used on Safety-Related Piping and Components of Nuclear Power Plants," U.S. Nuclear Regulatory Commission, February 1986.

1018. NUREG/CR-4263, "Reliability Analysis of Stiff Versus Flexible Piping Final Project Report," U.S. Nuclear Regulatory Commission, May 1985.

1019. NUREG/CR-3756, "Seismic Hazard Characterization of the Eastern United States," U.S. Nuclear Regulatory Commission, April 1984.

1020. NRC Letter to All Power Reactor Licensees (Except SEP Licensees) and All Applicants for Licenses to Operate Power Reactors, "Technical Specification for Snubbers (Generic Letter 84-13)," May 3, 1984. [8405040043]

1021. EPRI NP-2297, "Snubber Reliability Improvement Study," Electric Power Research Institute, March 1982.

1022. NUREG-1144, "Nuclear Plant Aging Research (NPAR) Program Plan," U.S. Nuclear Regulatory Commission, July 1985.

1023. SECY-86-231, "Survey on Engineering Expertise on Shift," August 6, 1986. [8608200375]

1024. Memorandum for K. Kniel from C. Ferrell, "Modification of Generic Issue No. 106, 'Highly Combustible Gases in Vital Areas,'" February 20, 1986. [8602280811]

1025. IE Information Notice No. 83-41, "Actuation of Fire Suppression System Causing Inoperability of Safety-Related Equipment," U.S. Nuclear Regulatory Commission, June 22, 1983. [8305110477]

1026. Letter to D. Farrar (Commonwealth Edison Co.) from J. Zwolinski (NRC), "Technical Specifications Relating to the Use of a Mobile Volume Reduction System (MVRS) at Dresden Station (TAC 56373, 56374)," August 13, 1986. [8608210177]

1027. Memorandum for D. Eisenhut from G. Lainas, "Summary of the Operating Reactor Events Meeting," January 28, 1982. [8310260053]

1028. Memorandum for R. Vollmer and E. Jordan from C. Michelson, "Effects of Fire Protection System Actuation on Safety Related Equipment," January 28, 1982. [8202220663]

1029. "Guidelines for Permanent BWR Hydrogen Water Chemistry Installations," BWR Owners Group for IGSCC Research, Hydrogen Installation Subcommittee, Electric Power Research Institute, 1987.

1030. NASA TMX-71565, "Review of Hydrogen Accidents and Incidents in NASA Operation," National Aeronautics and Space Administration, August 1974.

1031. Memorandum for T. Murley from E. Beckjord, "A New Generic Issue: Multiple Steam Generator Tube Leakage," June 16, 1992. [9212040356]

1032. Memorandum for H. Denton from T. Speis, "Earthquakes and Emergency Planning," January 18, 1984. [8402020014]

1033. Letter to W. Dircks (NRC) from S. Sholly (Union of Concerned Scientists), December 22, 1983. [8502270371]

1034. Letter to J. Asselstine (NRC) from S. Sholly (Union of Concerned Scientists), December 22, 1983. [8502090516]

1035. SECY-85-283, "Final Amendments to 10 CFR Part 50, Appendix E; Consideration of Earthquakes in Emergency Planning," August 21, 1985. [8508300319]

1036. IE Bulletin No. 85-03, "Motor-Operated Valve Common Mode Failures During Plant Transients Due to Improper Switch Settings," U.S. Nuclear Regulatory Commission, November 15, 1985 [8511130441], (Supplement 1) April 27, 1988 [8804210018].

1037. SECY-83-484, "Requirements for Emergency Response Capability," November 29, 1983. [8312130459]

1038. IE Information Notice No. 86-10, "Safety Parameter Display System Malfunctions," U.S. Nuclear Regulatory Commission, February 13, 1986. [8602100408]

1039. Memorandum for H. Denton from T. Speis, "Prioritization of Selected MPAs (Operating Plan, Item VI.B.6.b)," October 19, 1984. [8411010640]

1040. NUREG/CR-3246, "The Effect of Some Operations and Control Room Improvements on the Safety of the Arkansas Nuclear One, Unit One, Nuclear Power Plant," U.S. Nuclear Regulatory Commission, June 1983.

1041. Memorandum for K. Kniel from R. Bosnak, "Request for Subsumption of Generic Issue B-6 (GI B-6) Into Generic Isssue 119.1 (GI 119.1)," January 8, 1987. [8701200186]

1042. SECY-87-101, "Issues and Proposed Options Concerning Degree Requirement for Senior Operators," April 16, 1987. [8706030157]

1043. SECY-86-348, "Final Rulemaking for Revisions to Operator Licensing - 10 CFR 55 and Conforming Amendments," November 21, 1986. [8701020003]

1044. Federal Register Notice 52 FR 16007, "Regulatory Guides; Issuance and Availability," May 1, 1987.

1045. Memorandum for V. Stello from E. Beckjord, "Resolution of TMI Action Plan Items and Human Factors Issues," May 18, 1987. [8710280270]

1046. Memorandum for V. Stello from E. Beckjord, "Closeout of TMI Action Plan Item," February 27, 1987. [9704150146]

1047. Memorandum for K. Kniel from B. Sheron, "Request for the Prioritization of a Generic Issue on the Reliability of PWR Main Steam Safety Valves," May 27, 1986. [8604030313]

1048. IE Information Notice No. 86-05, "Main Steam Safety Valve Test Failures and Ring Setting Adjustments," U.S. Nuclear Regulatory Commission, January 31, 1986 [8601290054], (Supplement 1) October 16, 1986 [8610100107].

1049. Memorandum for F. Cherny from R. Baer, "50.55(e) Report on Crosby Main Steam Valve Ring Settings," February 5, 1985. [8502140267, 9704090262]

1050. Memorandum for R. Bosnak from F. Cherny, "Trip Report - Meeting of ASME Section III Subgroup on Pressure Relief, February 11, 1987," March 13, 1987. [8703190114]

1051. INPO 82-025, "Review of NRC Report: Precursors to Potential Severe Core Damage Accidents: 1969-1979 A Status Report, NUREG/CR-2497," Institute for Nuclear Power Operations, September 1982.

1052. NUREG/CR-2228, "Containment Response During Degraded Core Accidents Initiated by Transients and Small Break LOCA in the Zion/Indian Point Reactor Plants," U.S. Nuclear Regulatory Commission, July 1981.

1053. NUREG/CR-4752, "Coincident Steam Generator Tube Rupture and Stuck-Open Safety Relief Valve Carryover Test," U.S. Nuclear Regulatory Commission, March 1987.

1054. Memorandum for W. Russell, et al., from R. Starostecki, "Request for Regional Inspection to Verify Adequate Flow Capacity of Main Steam Code Safety Valves and Proper Ring Adjustments," November 8, 1987. [8711120155]

1055. AEOD/C204, "San Onofre Unit 1 Loss of Salt Water Cooling Event on March 10, 1980," Office for Analysis and Evaluation of Operational Data, U.S. Nuclear Regulatory Commission, July 1982. [8208260403]

1056. NUREG-0869, "USI A-43 Regulatory Analysis," U.S Nuclear Regulatory Commission, (Rev. 1) October 1985.

1057. NUREG-0897, "Containment Emergency Sump Performance," U.S. Nuclear Regulatory Commission, (Rev. 1) October 1985.

1058. Regulatory Guide 1.82, "Water Sources for Long-Term Recirculation Cooling Following a Loss-of-Coolant Accident," U.S. Nuclear Regulatory Commission, June 30, 1974 [7902090041], (Rev. 1) November 30, 1985 [8512100138], (Rev. 2) May 31, 1996 [9605210504].

1059. NRC Letter to All Licensees of Operating Reactors, Applicants for Operating Licenses, and Holders of Construction Permits, "Potential for Loss of Post-LOCA Recirculation Capability Due to Insulation Debris Blockage (Generic Letter 85-22)," December 3, 1985. [8511270253]

1060. SECY-85-349, "Resolution of Unresolved Safety Issue A-43, 'Containment Emergency Sump Performance,'" October 31, 1985. [8511070302]

1061. NUREG-0649, "Task Action Plans for Unresolved Safety Issues Related to Nuclear Power Plants," U.S. Nuclear Regulatory Commission, February 1980, (Rev. 1) September 1984.

1062. Federal Register Notice 51 FR 39390, "10 CFR Part 50, Emergency Planning and Preparedness; Withdrawal," October 28, 1986.

1063. NUREG/CR-3017, "Correlation of Seismic Experience Data in Non-Nuclear Facilities with Seismic Equipment Qualification in Nuclear Plants (A-46)," U.S. Nuclear Regulatory Commission, August 1983.

1064. NUREG/CR-3875, "The Use of In-Situ Procedures for Seismic Qualification of Equipment in Currently Operating Plants," U.S. Nuclear Regulatory Commission, June 1984.

1065. NUREG/CR-3357, "Identification of Seismically Risk Sensitive Systems and Components in Nuclear Power Plants," U.S. Nuclear Regulatory Commission, June 1983.

1066. NUREG/CR-3266, "Seismic and Dynamic Qualification of Safety-Related Electrical and Mechanical Equipment in Operating Nuclear Power Plants," U.S. Nuclear Regulatory Commission, September 1983.

1067. NUREG-1211, "Regulatory Analysis for Resolution of Unresolved Safety Issue A-46, 'Seismic Qualification of Equipment in Operating Plants,'" U.S. Nuclear Regulatory Commission, February 1987.

1068. Regulatory Guide 1.154, "Format and Content of Plant-Specific Pressurized Thermal Shock Safety Analysis Reports for Pressurized Water Reactors," U.S. Nuclear Regulatory Commission, January 1987.

1069. NRC Letter to All Holders of Operating Licenses Not Reviewed to Current Licensing Criteria on Seismic Qualification of Equipment, "Verification of Seismic Adequacy of Mechanical and Electrical Equipment in Operating Reactors, Unresolved Safety Issue (USI) A-46 (Generic Letter 87-02)," February 19, 1987. [8702200135]

1070. NUREG-1216, "Safety Evaluation Report Related to the Operability and Reliability of Emergency Diesel Generators Manufactured by Transamerica Delaval, Inc.," U.S. Nuclear Regulatory Commission, August 1986.

1071. Memorandum for T. Speis, et al., from C. Berlinger, "Closeout of Generic Issue 91 - TDI Emergency Diesel Generator Reliability," September 3, 1987. [8709080427]

1072. Memorandum for W. Russell from T. Speis, "Generic Issue 125.II.13 - Operator Job Aids," June 12, 1986. [8606250128]

1073. SECY-83-288, "Pressurized Thermal Shock (PTS) Rule," July 15, 1983. [8307270206]

1074. Memorandum for W. Dircks from S. Chilk, "SECY-83-288, 'Proposed Pressurized Thermal Shock (PTS) Rule,'" January 13, 1984. [8402100267]

1075. Memorandum for K. Kniel from R. Bosnak, "Integration of NUREG-0933 Issues," May 27, 1986. [8606090491]

1076. NUREG-1230, "Compendium of ECCS Research for Realistic LOCA Analysis," U.S. Nuclear Regulatory Commission, December 1988. [8903030340]

1077. Federal Register Notice 52 FR 9453, "10 CFR Parts 50 and 55, Operators' Licenses and Conforming Amendments," March 25, 1987.

1078. AEOD/C701, "Air Systems Problems at U.S. Light Water Reactors," Office for Analysis and Evaluation of Operational Data, U.S. Nuclear Regulatory Commission, March 1987. [8707240066]

1079. NUREG-1275, "Operating Experience Feedback Report," U.S. Nuclear Regulatory Commission, (Vol. 1) July 1987, (Vol. 2) December 1987, (Vol. 3) November 1988, (Vol. 4) March 1989, (Vol. 5) March 1989, (Vol. 5, Addendum) August 1989, (Vol. 6) February 1991, (Vol. 7) September 1992, (Vol. 8) December 1992, (Vol. 9) March 1993.

1080. NUREG/CR-4374, "A Review of the Oconee-3 Probabilistic Risk Assessment," U.S. Nuclear Regulatory Commission, (Vol. 1) March 1986, (Vol. 2) March 1986, (Vol. 3) June 1986.

1081. NUREG-1150, "Severe Accident Risks: An Assessment for Five U.S. Nuclear Power Plants," U.S. Nuclear Regulatory Commission, (Vol. 1) December 1990, (Vol. 2) December 1990, (Vol. 3) January 1991.

1082. NUREG/CR-3673, "Economic Risks of Nuclear Power Reactor Accidents," U.S. Nuclear Regulatory Commission, May 1984.

1083. Memorandum for T. Speis from F. Gillespie, "Review of RES Proposed Prioritization of Generic Issue (GI) 125.II.11, 'Recovery of Main Feedwater as an Alternative to Auxiliary Feedwater,'" April 27, 1988. [8805120322]

1084. NUREG-1258, "Evaluation Procedure for Simulation Facilities Certified Under 10 CFR 55," U.S. Nuclear Regulatory Commission, December 1987.

1085. NRC Letter to All Operating Reactor Licensees, Applicants for an Operating License and Holders of Construction Permits for Babcock & Wilcox Pressurized Water Reactors, "Safety Evaluation of 'Abnormal Transient Operating Guidelines,' (Generic Letter 83-31)," September 19, 1983. [8309190017]

1086. Memorandum for B. Morris from B. Sheron, "LOCA Concern of SCE Employee," April 28, 1987. [9704150141]

1087. Federal Register Notice 50 FR 27006, "10 CFR Part 50, Modification of General Design Criterion 4 Requirements for Protection Against Dynamic Effects of Postulated Pipe Ruptures," July 1, 1985.

1088. UCID-20397, "Assessment of Value-Impact Associated with the Elimination of Postulated Pipe Ruptures from the Design Basis for Nuclear Power Plants," Lawrence Livermore National Laboratory, March 29, 1985.

1089. Letter to the Honorable Edward J. Markey (Committee on Energy and Commerce, U.S. House of Representatives) from L. Zech (NRC), March 20, 1987. [8703270224]

1090. GAO/RCED-88-73, "Nuclear Regulation - Action Needed to Ensure that Utilities Monitor and Repair Pipe Damage," U.S. General Accounting Office, March 1988.

1091. Memorandum for D. Morrison from H. Thompson, "Generic Issue Management Control System," January 17, 1997. [9803260111]

1092. EPRI NP-5410, "Nondestructive Evaluation of Ferritic Piping for Erosion-Corrosion," Electric Power Research Institute, September 1987.

1093. NRC Bulletin No. 87-01, "Thinning of Pipe Walls in Nuclear Power Plants," U.S. Nuclear Regulatory Commission, July 9, 1987. [8707020018]

1094. SECY-88-50, "Status Report on Pipe Wall Thinning (Responses to NRC Bulletin 87-01 on Pipe Wall Thinning in Nuclear Power Plants)," February 22, 1988. [8809090066]

1095. NRC Information Notice No. 88-17, "Summary of Responses to NRC Bulletin 87-01, 'Thinning of Pipe Walls in Nuclear Power Plants," U.S. Nuclear Regulatory Commission, April 22, 1988. [8804180039]

1096. SECY-88-50A, "Report on the Meeting with NUMARC, EPRI, and INPO on Status of Industry's Erosion/Corrosion Program," May 10, 1988. [8805230074]

1097. Memorandum to J. Taylor and W. Parler from S. Chilk, "COMSECY-93-029 - Draft Rulemaking Package on License Renewal; SECY-93-049 - Implementation of 10 CFR Part 54, 'Requirements for Renewal of Operating Licenses for Nuclear Power Plants'; SECY-93-113 - Additional Implementation Information for 10 CFR Part 54, 'Requirements for Renewal of Operating Licenses for Nuclear Power Plants,'" June 28, 1993. [9409010107]

1098. Memorandum for V. Stello from T. Murley, "Resolution of Generic Issue I.A.4.2(4) 'Review Simulators for Conformance to Criteria,'" May 28, 1988. [8806020275]

1099. Memorandum for B. Morris from B. Sheron, "Updated GIMCS for GI I.D.5(5)," February 2, 1988. [9704150145]

1100. Memorandum for V. Stello from E. Beckjord, "Redesignation of Generic Issue I.D.5(5), 'Disturbance Analysis Systems,'" February 22, 1988. [8809190312]

1101. Memorandum for V. Stello from E. Beckjord,""Closure of Generic Issue I.D.4 'Control Room Design Standard,'" March 28, 1988. [9704160014]

1102. Memorandum for T. Speis from R. Houston, Integration of Generic Issue Resolution," November 4, 1987. [9704150161]

1103. Memorandum for V. Stello from E. Beckjord, "Resolution of Generic Safety Issue II.E.4.3, `Containment Integrity Check,'" March 22, 1988. [8809150125]

1104. NUREG-1273, "Technical Findings and Regulatory Analysis for Generic Safety Issue II.E.4.3, 'Containment Integrity Check,'" U.S. Nuclear Regulatory Commission, April 1988.

1105. Memorandum for T. Speis from G. Arlotto, "Generic Issues Program," January 14, 1988. [9704160053]

1106. Memorandum for R. Baer from G. Bagchi, "Proposed Resolution of Generic Issue B-5, 'Buckling of Steel Containment,'" March 1, 1988. [8804270290]

1107. Memorandum for E. Beckjord from G. Arlotto, "Closeout of Generic Issue B-5, Buckling Behavior of Steel Containments," April 28, 1988. [8805050117]

1108. NUREG-1109, "Regulatory/Backfit Analysis for the Resolution of Unresolved Safety Issue A-44, Station Blackout," U.S. Nuclear Regulatory Commission, June 1988.

1109. Federal Register Notice 53 FR 23203, "10 CFR 50, Station Blackout," June 21, 1988.

1110. Regulatory Guide 1.155, "Station Blackout," U.S. Nuclear Regulatory Commission, June 1988. [8907270193]

1111. NRC Letter to All Licensees of Operating Boiling Water Reactors (BWRs), and Holders of Construction Permits, "NRC Position on IGSCC in BWR Austenitic Stainless Steel Piping (Generic Letter 88-01)," January 25, 1988. [8801260537]

1112. IE Bulletin No. 85-01, "Steam Binding of Auxiliary Feedwater Pumps," U.S. Nuclear Regulatory Commission, October 29, 1985. [8510250539]

1113. NRC Letter to All Licensees, Applicants for Operating Licenses, and Holders of Construction Permits for Pressurized Water Reactors, "Resolution of Generic Safety Issue 93, 'Steam Binding of Auxiliary Feedwater Pumps' (Generic Letter 88-03)," February 17, 1988. [8802180267]

1114. Memorandum for E. Beckjord from T. Murley, "Resolution of Generic Safety Issue 93, 'Steam Binding of Auxiliary Feedwater Pumps,'" August 14, 1987. [8708210408]

1115. Memorandum for E. Beckjord from F. Gillespie, "Review of RES-Proposed Prioritization of Generic Issue No. 136, 'Storage and Use of Large Quantities of Cryogenic Combustibles on Site,'" March 25, 1988. [8804050182]

1116. Federal Register Notice 53 FR 9430, "Final Commission Policy Statement on Maintenance of Nuclear Power Plants," March 23, 1988.

1117. Memorandum for V. Stello from T. Murley, "Closeout of Generic Issue HF-08, 'Maintenance and Surveillance Program,'" May 4, 1988. [8805160004]

1118. SECY-88-248, "Implementation of the Severe Accident Policy for Future Light Water Reactors," September 6, 1988. [8809160019]

1119. NUREG/CR-4780, "Procedures for Treating Common Cause Failures in Safety and Reliability Studies," U.S. Nuclear Regulatory Commission, (Vol. 1) January 1988, (Vol. 2) January 1989.

1120. NUREG-1192, "An Investigation of the Contributors to Wrong Unit or Wrong Train Events," U.S. Nuclear Regulatory Commission, April 1986.

1121. Information Notice No. 87-25, "Potentially Significant Problems Resulting from Human Error Involving Wrong Unit, Wrong Train, or Wrong Components," U.S. Nuclear Regulatory Commission, June 11, 1987. [8706050211]

1122. Memorandum for V. Stello from T. Murley, "Final Resolution of Generic Issue (GI) 102: Human Error in Events Involving Wrong Unit or Wrong Train," September 12, 1988. [8810070118]

1123. Dam Failure Model, Pacific Northwest Laboratories, October 1983.

1124. "Analysis of Gradual Earth-Dam Failure," Journal of Hydraulic Engineering, Volume 114, No. 1, American Society of Civil Engineers, January 1988.

1125. "Use of A Dam Break Model to Assess Flooding at Haddam Neck Nuclear Power Plant," Water Resources Bulletin, Vol. 20, No. 6, American Water Resources Association, December 1984.

1126. Technical Evaluation Report, "Quabbin Dam Failure Flooding Consequences at Haddam Neck Plant," Franklin Research Center, August 25, 1983.

1127. "Dam Breach Parameters, Outflow Peaks, and Flood Stages," International Symposium on Hydrometeorology, American Water Resources Association, June 1982.

1128. PB82-224577, "Application of and Guidelines for Using Available DAM Break Models," Tennessee Water Resources Research Center, May 1981.

1129. IE Bulletin No. 82-02, "Degradation of Threaded Fasteners in the Reactor Coolant Pressure Boundary of PWR Plants," U.S. Nuclear Regulatory Commission, June 2, 1982. [8204210380]

1130. RIL 158, "Operational Safety Reliability Program," U.S. Nuclear Regulatory Commission, October 31, 1988. [8811070111]

1131. Memorandum for V. Stello from E. Beckjord, "Closure of Generic Issue II.C.4, 'Reliability Engineering,'" October 31, 1988. [8811150124]

1132. Memorandum for E. Beckjord from F. Gillespie, "Generic Issue 139, 'Thinning of Carbon Steel Piping in LWRs,'" December 27, 1988. [8901130015]

1133. NUREG-1332, "Regulatory Analysis for the Resolution of Generic Issue 125.II.7, 'Reevaluate Provision to Automatically Isolate Feedwater from Steam Generator During a Line Break,'" U.S. Nuclear Regulatory Commission, September 1988.

1134. Memorandum for V. Stello from E. Beckjord, "Resolution of Generic Issue 125.II.7, 'Reevaluate Provision to Automatically Isolate Feedwater from Steam Generator During a Line Break,'" September 9, 1988. [8811290524]

1135. NUREG-0848, "Final Environmental Statement Related to the Operation of Byron Station Units 1 and 2," U.S. Nuclear Regulatory Commission, April 1982.

1136. Memorandum to C. Miller from R. Borchardt, "Review of Temporary Instruction 2515/131, 'Licensee Offsite Communication Capabilities,' for Deletion from the NRC Inspection Manual," December 3, 1996. [9612060074]

1137. SECY-86-97, "Steam Generator USI Program - Utility Responses to Staff Recommendations in Generic Letter 85-02," March 24, 1986. [8609160048]

1138. NRC Bulletin No. 88-02, "Rapidly Propagating Fatigue Cracks in Steam Generator Tubes," February 5, 1988. [8802020035]

1139. SECY-88-272, "Technical Resolution of Unresolved Safety Issues A-3, A-4, and A-5 Regarding Steam Generator Tube Integrity," September 27, 1988. [8811040042]

1140. NRC Information Notice No. 87-28, "Air Systems Problems at U.S. Light Water Reactors," June 22, 1987 [8706170115], (Supplement 1) December 28, 1987 [8712230003].

1141. NRC Letter to All Holders of Operating Licenses or Construction Permits for Nuclear Power Plants, "Instrument Air Supply System Problems Affecting Safety-Related Equipment (Generic Letter 88-14)," August 8, 1988. [8808120294]

1142. Memorandum for V. Stello from E. Beckjord, "Resolution of Generic Issue 43, Air Systems Reliability," September 30, 1988. [9704160039]

1143. SECY-88-260, "Shutdown Decay Heat Removal Requirements (USI A-45)," September 13, 1988. [8811040098]

1144. NUREG/CR-5015, "Improved Reliability of Residual Heat Removal Capability in PWRs as Related to Resolution of Generic Issue 99," U.S. Nuclear Regulatory Commission, May 1988.

1145. NRC Letter to All Holders of Operating Licenses or Construction Permits for Pressurized Water Reactors (PWRs), "Loss of Decay Heat Removal (Generic Letter No. 88-17) 10 CFR 50.54f," October 17, 1988. [8810180350]

1146. Memorandum for V. Stello from E. Beckjord, "Resolution of Generic Issue 99, 'Loss of RHR Capability in PWRs,'" November 2, 1988. [8811290361]

1147. Memorandum for V. Stello from T. Murley, "Final Resolution of Generic Issue (GI) 66, 'Steam Generator Requirements,'" November 28, 1988. [8812010081]

1148. Memorandum for W. Minners from F. Rowsome, "A Candidate Generic Issue," December 11, 1984. [8501080138]

1149. Regulatory Guide 1.65, "Materials and Inspections for Reactor Vessel Closure Studs," U.S. Atomic Energy Commission, October 1973. [7907100246]

1150. Memorandum for W. Minners from A. Thadani, "Prioritization of RHR Suction Valve Testing," May 7, 1984. [8405180403]

1151. NUREG/CR-2934, "Review and Evaluation of the Indian Point Probabilistic Safety Study," U.S. Nuclear Regulatory Commission, December 1982.

1152. NUREG/CR-3300, "Review and Evaluation of the Zion Probabilistic Safety Study," U.S. Nuclear Regulatory Commission, (Vol. 1) May 1984.

1153. Memorandum for F. Cherny from W. Minners, "Reactor Coolant System Pressure Isolation Valve (PIV) Leak Test Requirements," July 2, 1985. [8507120595]

1154. Regulatory Guide 1.25, "Assumptions Used for Evaluating the Potential Radiological Consequences of a Fuel Handling Accident in the Fuel Handling and Storage Facility for Boiling and Pressurized Water Reactors," U.S. Atomic Energy Commission, March 1972. [7907100118]

1155. Memorandum for R. Bernero from T. Speis, "Relationship of TIA 84-72 (Haddam Neck Refueling Cavity Seal Failure) to Generic Issue No. 82 (Beyond Design Basis Accidents in Spent Fuel Pools)," April 11, 1985. [8504240705]

1156. Memorandum for K. Kniel from W. Minners, "Refueling Cavity Seal Failure," April 1, 1986. [8604080427]

1157. NUREG/CR-4982, "Severe Accidents in Spent Fuel Pools in Support of Generic Safety Issue 82," U.S. Nuclear Regulatory Commission, July 1987.

1158. IE Bulletin No. 84-03, "Refueling Cavity Seal Failure," U.S. Nuclear Regulatory Commission, August 24, 1984. [8408240358]

1159. Letter to D. Crutchfield (NRC) from W. Counsil (Connecticut Yankee Atomic Power Company), "Haddam Neck Plant Reactor Cavity Seal Ring Failure," September 12, 1984. [8409250335]

1160. Memorandum for K. Kniel from W. Minners, "Refueling Cavity Seal Failure," May 8, 1986. [8605210217]

1161. Memorandum for K. Kniel from W. Minners, "Proposed Generic Issue - Fission Product Removal by Containment Sprays or Pools," March 10, 1987. [8703170451]

1162. Federal Register Notice 54 FR 3701, "[NUREG-0800] Standard Review Plan for the Review of Safety Analysis Reports for Nuclear Power Plants; Issuance and Availability," January 25, 1989.

1163. Memorandum for T. Speis from K. Kniel, "Treatment of Lessons-Learned from Surry Event as Related to Generic Issues," March 31, 1987. [8704030542]

1164. Memorandum for T. Speis from R. Bernero, "Prioritization of Generic Issue - Valve Interlocks to Prevent Vessel Draining During Shutdown Cooling," May 21, 1986. [8606120635]

1165. AEOD/E609, "Inadvertent Draining of Reactor Vessel During Shutdown Cooling Operation," Office for Analysis and Evaluation of Operational Data, U.S. Nuclear Regulatory Commission, August 1986. [8608290176, 8608290040]

1166. Memorandum for T. King from K. Kniel, "Additional Comments Regarding Prioritization of Generic Issue-129, 'Residual Heat Removal System Valve Mis-alignment during Shutdown Cooling Operations,'" December 7, 1988. [8812210402]

1167. Memorandum for W. Minners from B. Sheron, "Proposed Generic Issue, 'Potential Seismic Interaction Involving the Movable In-Core Flux Mapping System Used in Westinghouse Designed Plants,'" August 27, 1985. [8509050358]

1168. Letter to F. Miraglia (NRC) from G. Goering (Westinghouse Owners Group), "Potential Seismic Interaction Associated with the Flux Mapping System in Westinghouse Plants," June 10, 1985. [8509050363]

1169. NUREG/CR-2000, "Licensee Event Report (LER) Compilation," U.S. Nuclear Regulatory Commission, (Vol. 3, No. 7) August 1984.

1170. Memorandum for T. King from R. Riggs, "Computer Program 'SEALCOM' Used in Generic Issue 131," May 1, 1989. [9704160010]

1171. IE Information Notice No. 85-45, "Potential Seismic Interaction Involving the Movable In-Core Flux Mapping System Used in Westinghouse Designed Plants," U.S. Nuclear Regulatory Commission, June 6, 1985. [8506060677]

1172. Letter to R. Engelken (NRC) from H. Ray (Southern California Edison Company), "Docket No. 50-361, Licensee Event Report, Numbers 82-002 and 82-003, San Onofre Nuclear Generating Station, Unit 2," March 30, 1982. [8204140262]

1173. Letter to R. Haynes (NRC) from C. Mathis (Boston Edison Company), "Docket No. 50-293, License DPR-35," September 15, 1982. [8209280087]

1174. NUREG-1251, "Implications of the Accident at Chernobyl for Safety Regulation of Commercial Nuclear Power Plants in the United States," U.S. Nuclear Regulatory Commission, (Vols. I and II) April 1989.

1175. SECY-89-081, "Final Report on Chernobyl Implications," March 7, 1989. [8903200205]

1176. AEOD/S801, "Significant Events that Involved Procedures," Office for Analysis and Evaluation of Operational Data, U.S. Nuclear Regulatory Commission, March 1988. [8907310351, 8906090032]

1177. NRC Letter to All Holders of Operating Licenses, Applicants for Operating Licenses and Holders of Construction Permits for Power Reactors, "NRC Use of the Terms, 'Important to Safety' and 'Safety Related"(Generic Letter 84-01)," January 5, 1984. [8401050382]

1178. NRC Memorandum and Order CLI-84-9, June 6, 1984. [8406070146]

1179. SECY-85-119, "Issuance of Proposed Rule on the Important-to-Safety Issue," April 5, 1985. [8505030656]

1180. Memorandum for W. Dircks from S. Chilk, "Staff Requirements -- SECY-85-119 - 'Issuance of Proposed Rule on the Important-to-Safety Issue,'" December 31, 1985. [8601160559]

1181. SECY-86-164, "Proposed Rule on the Important-to-Safety Issue," May 29, 1986. [8607010004]

1182. Memorandum for V. Stello from E. Beckjord, "Resolution of Generic Issue I.F.1, "Expand QA List,'" January 12, 1989. [9704150147]

1183. Memorandum for W. Minners from L. Engle, "Generic Implications/LLNL Technical Evaluation Report on Seven Main Transformer Failures at the North Anna Power Station, Units 1 and 2," November 16, 1984. [8411270057]

1184. UCID-20053, "Technical Evaluation Report on the Seven Main Transformer Failures at the North Anna Power Station, Units 1 and 2," Lawrence Livermore National Laboratory, March 29, 1984. [8412120181, 8412070065]

1185. Regulatory Guide 1.120, "Fire Protection Guidelines for Nuclear Power Plants," U.S. Nuclear Regulatory Commission, (Draft) June 1976, (Draft) November 1977.

1186. NUREG/CR-3862, "Development of Transient Initiating Event Frequencies for Use in Probabilistic Risk Assessments," U.S. Nuclear Regulatory Commission, May 1985.

1187. Memorandum for V. Stello from E. Beckjord, "Closeout of Generic Issue II.F.5, 'Classification of Instrumentation, Control and Electrical Equipment,'" May 5, 1989. [8906270390]

1188. SECY-83-221, "Prioritization of Generic Safety Issues," June 7, 1983. [8306150099]

1189. Memorandum for W. Dircks from S. Chilk, "SECY-83-221 - Prioritization of Generic Safety Issues," December 9, 1983. [9704150148]

1190. Federal Register Notice 43 FR 1565, "Program for Resolution of Generic Issues Related to Nuclear Power Plants," January 10, 1978.

1191. Federal Register Notice 54 FR 24432, "Program for Resolution of Generic Issues Related to Nuclear Power Plants; Policy Statement," June 7, 1989.

1192. RES Office Letter No. 1, "Procedure for Identification, Prioritization, Resolution, and Tracking of Generic Issues," Office of Nuclear Regulatory Research, December 3, 1987 [9704150149], (Rev. 1) March 22, 1989 [9609200344], (Rev. 2) July 12, 1991 [9107250098], (Rev. 3) November 26, 1991 [9704150154], (Rev. 4) June 2, 1994 [9704150218].

1193. RES Office Letter No. 2, "Procedures for Obtaining Regulatory Impact Analysis Review and Support," Office of Nuclear Regulatory Research, November 18, 1988. [8901180069]

1194. RES Office Letter No. 3, "Procedure and Guidance for the Resolution of Generic Issues," May 10, 1988 [8809220069], (Rev. 1) December 21, 1988 [9704100054], (Rev. 2) March 27, 1989 [9609200351].

1195. NUREG/CR-1251, "Implications of the Accident at Chernobyl for Safety Regulation of Commercial Nuclear Power Plants in the United States," U.S. Nuclear Regulatory Commission, (Vol. 1) April 1989, (Vol. 2) April 1989.

1196. NUREG/CR-5176, "Seismic Failure and Cask Drop Analyses of the Spent Fuel Pools at Two Representative Nuclear Power Plants," U.S. Nuclear Regulatory Commission, January 1989.

1197. NUREG/CR-5281, "Value/Impact Analyses of Accident Preventive and Mitigative Options for Spent Fuel Pools," U.S. Nuclear Regulatory Commission, March 1989.

1198. NUREG-1353, "Regulatory Analysis for the Resolution of Generic Issue 82 'Beyond Design Basis Accidents in Spent Fuel Pools,'" U.S. Nuclear Regulatory Commission, April 1989.

1199. Memorandum for V. Stello from E. Beckjord, "Resolution of Generic Issue, 'Beyond Design Basis Accidents in Spent Fuel Pools,'" April 24, 1989. [9704100053]

1200. NUREG/CR-5197, "Evaluation of Generic Issue 115, 'Enhancement of the Reliability of Westinghouse Solid State Protection System,'" U.S. Nuclear Regulatory Commission, January 1989.

1201. NUREG-1341, "Regulatory Analysis for the Resolution of Generic Issue 115, 'Enhancement of the Reliability of the Westinghouse Solid State Protection System,'" U.S. Nuclear Regulatory Commission, May 1989.

1202. Memorandum for V. Stello from E. Beckjord, "Resolution of Generic Issue 115, 'Enhancement of the Reliability of Westinghouse Solid State Protection Systems,' NUREG-1341," April 17, 1989. [9608210072]

1203. Memorandum for V. Stello from T. Murley, "Plant-Specific Backfit for Improved Auxiliary Feedwater System Reliability at Arkansas Nuclear One, Unit 2 and Rancho Seco," January 31, 1989. [8902030163]

1204. Memorandum for V. Stello from T. Murley, "Final Resolution of Generic Issue (GI) 122.2, 'Initiating Feed and Bleed,'" April 26, 1989. [8905090075]

1205. NRC Letter to All Licensees of Operating Plants, Applicants for Operating Licenses, and Holders of Construction Permits, "Task Action Plan I.D.2 - Safety Parameter Display System - 10 CFR §50.54(f) - (Generic Letter No. 89-06)," April 12, 1989. [8904120042]

1206. NUREG-1342, "A Status Report Regarding Industry Implementation of Safety Parameter Display Systems," U.S. Nuclear Regulatory Commission, April 1989.

1207. Memorandum for V. Stello from T. Murley, "Final Resolution of Generic Issue 125.I.3, 'SPDS Availability,'" April 26, 1989. [8905050362]

1208. Memorandum for V. Stello from T. Murley, "Final Resolution of Generic Issue (GI) HF4.1, Inspection Procedure for Upgraded Emergency Operating Procedures," October 17, 1988. [8811070169]

1209. NUREG-1358, "Lessons Learned from the Special Inspection Program for Emergency Operating Procedures," U.S. Nuclear Regulatory Commission, April 1989.

1210. NRC Information Notice No. 86-64, "Deficiencies in Upgrade Programs for Plant Emergency Operating Procedures," August 14, 1986 [8608120028], (Supplement 1) April 20, 1987 [8704160062].

1211. NUREG/CR-5088, "Fire Risk Scoping Study: Investigation of Nuclear Power Plant Fire Risk, Including Previously Unaddressed Issues," U.S. Nuclear Regulatory Commission, January 1989.

1212. NUREG/CR-5112, "Evaluation of Boiling Water Reactor Water-Level Sensing Line Break and Single Failure," U.S. Nuclear Regulatory Commission, March 1989.

1213. NRC Letter to All Holders of Operating Licenses or Construction Permits for Boiling Water Reactors, "Resolution of Generic Issue 101, 'Boiling Water Reactor Water Level Redundancy' (Generic Letter 89-11)," June 30, 1989. [8906300178]

1214. Memorandum for V. Stello from E. Beckjord, "Closeout of GI 101, 'Boiling Water Reactor Water Level Redundancy,'" April 24, 1989. [9704100038]

1215. Regulatory Guide 1.106, "Thermal Overload Protection for Electric Motors on Motor-Operated Valves," U.S. Nuclear Regulatory Commission, November 1975, (Rev. 1) March 1977. [7907100392]

1216. NUREG-1296, "Thermal Overload Protection for Electric Motors on Safety-Related Motor-Operated Valves - Generic Issue II.E.6.1," U.S. Nuclear Regulatory Commission, June 1988.

1217. NRC Letter to All Licensees of Operating Power Plants and Holders of Construction Permits for Nuclear Power Plants, "Safety-Related Motor-Operated Valve Testing and Surveillance (Generic Letter No. 89-10) - 10 CFR 50.54(f)," June 28, 1989 [8906290082], (Supplement 1) June 13, 1990 [9201300217], (Supplement 2) August 3, 1990 [9007310052], (Supplement 3) October 25, 1990 [9010220146], (Supplement 4) February 12, 1992 [9202250311], (Supplement 5) June 28, 1993 [9306230099], (Supplement 6) March 8, 1994 [9402280155].

1218. Memorandum for V. Stello from E. Beckjord, "Close-out of Generic Issue II.E.6.1, 'In Situ Testing of Valves,'" June 30, 1989. [8907100275]

1219. Memorandum for F. Rowsome from D. Crutchfield, "Potential Generic Issue: Loss of Effective Volume for Containment Recirculation Spray," July 13, 1984. [8407240406]

1220. Memorandum for G. Lainas from R. Houston, "Task Interface Agreement (TIA) #83-144: Loss of Effective Volume for Containment Recirculation Spray for H.B. Robinson, Unit 2 (TAC #53223)," August 6, 1984. [8408130232]

1221. Memorandum for W. Minners from F. Rowsome, "Candidate Generic Safety Issue: Allowable Outage Times for Diverse, Simultaneous Equipment Outages," May 9, 1985. [8506030097]

1222. NRC Letter to All Licensees Holding Operating Licenses and Construction Permits for Nuclear Power Reactor Facilities, "Individual Plant Examination for Severe Accident Vulnerabilities - 10 CFR § 50.54(f), (Generic Letter No. 88-20)," November 23, 1988 [8811280048], (Supplement 1) August 29, 1989 [8908300001], (Supplement 2) April 4, 1990 [9003300127], (Supplement 3) July 6, 1990 [9007020114], (Supplement 4) June 28, 1991 [9106270324], (Supplement 5) September 8, 1995.

1223. Proceedings of the International Topical Meeting on Probability, Reliability, and Safety Assessment, PSA '89, p.48, "Potential Underestimation of Test and Maintenance Unavailabilities in Probabilistic Risk Assessments," American Nuclear Society, April 2-7, 1989.

1224. Memorandum for B. Morris from F. Gillespie, "Prioritization of GI-117, 'Allowable Outage Times for Diverse Simultaneous Equipment Outages,'" August 4, 1989. [9704100058]

1225. Federal Register Notice 46 FR 58484, "10 CFR Part 50, Interim Requirements Related to Hydrogen Control," December 2, 1981.

1226. Federal Register Notice 50 FR 3498, "10 CFR Part 50, Hydrogen Control Requirements," January 25, 1985.

1227. SECY-89-122, "Resolution of Unresolved Safety Issue (USI) A-48, 'Hydrogen Control Measures and Effects of Hydrogen Burns on Safety Equipment,'" April 19, 1989. [8905010149]

1228. NUREG-0943, "Threaded-Fastener Experience in Nuclear Power Plants," U.S. Nuclear Regulatory Commission, January 1983.

1229. EPRI NP-3784, "A Survey of the Literature on Low-Alloy Steel Fastener Corrosion in PWR Power Plants," Electric Power Research Institute, December 1984.

1230. EPRI RP 2520-7, "Degradation and Failure of Bolting in Nuclear Power Plants," Electric Power Research Institute, June 1987.

1231. EPRI NP-2174, "A Study of Bolting Problems, Tools, and Practices in the Nuclear Industry," Electric Power Research Institute, December 1981.

1232. NUREG-1174, "Evaluation of Systems Interactions in Nuclear Power Plants," U.S. Nuclear Regulatory Commission, May 1989.

1233. NUREG-1229, "Regulatory Analysis for Resolution for USI A-17," U.S. Nuclear Regulatory Commission, August 1989.

1234. SECY-89-230, "Unresolved Safety Issue A-17, 'Systems Interactions in Nuclear Power Plants,'" August 1, 1989. [8908140127]

1235. NRC Letter to All Holders of Operating Licenses or Construction Permits for Nuclear Power Plants, "Resolution of Unresolved Safety Issue A-17, 'Systems Interactions in Nuclear Power Plants' (Generic Letter 89-18)," September 6, 1989. [8909070029]

1236. Federal Register Notice 54 FR 34836, "Issuance and Availability of NUREG-1174, 'Evaluation of Systems Interactions in Nuclear Power Plants: Technical Findings Related to Unresolved Safety Issue A17,' and NUREG-1229, 'Regulatory Analysis for Resolution of USI A-17, - Systems Interactions in Nuclear Power Plants,'" August 22, 1989.

1237. NUREG/CR-5420, "Multiple System Responses Program - Identification of Concerns Related to A Number of Specific Regulatory Issues," U.S. Nuclear Regulatory Commission, October 1989.

1238. NUREG/CR-5437, "Recommendations for Resolution of Public Comments on USI A-40, 'Seismic Design Criteria,'" U.S. Nuclear Regulatory Commission, June 1989.

1239. IE Bulletin No. 79-02, "Pipe Support Base Plate Designs Using Concrete Expansion Anchor Bolts," U.S. Nuclear Regulatory Commission, March 8, 1979 [7903140038], (Rev. 1) June 20, 1979 [7906200183], (Rev. 2) November 8, 1979 [7908220136].

1240. IE Bulletin No. 79-14, "Seismic Analysis for As-Built Safety-Related Piping Systems," U.S. Nuclear Regulatory Commission, July 2, 1979 [7907060295], (Rev. 1) July 18, 1979 [7907250430].

1241. IE Bulletin No. 80-11, "Masonry Wall Design," U.S. Nuclear Regulatory Commission, May 8, 1980. [7912190695]

1242. NUREG/CR-1161, "Recommended Revisions to Nuclear Regulatory Commission Seismic Design Criteria," U.S. Nuclear Regulatory Commission, May 1980.

1243. NUREG/CR-3480, "Value/Impact Assessment for Seismic Design Criteria USI A-40," U.S. Nuclear Regulatory Commission, August 1984.

1244. NUREG-1233, "Regulatory Analysis for USI A-40, 'Seismic Design Criteria,'" U.S. Nuclear Regulatory Commission, September 1989.

1245. SECY-89-296, "Unresolved Safety Issue A-40, 'Seismic Design Criteria,'" September 22, 1989. [8910060116]

1246. Federal Register Notice 54 FR 40220, "Issuance and Availability Final Resolution of Unresolved Safety Issue (USI) A-40; Seismic Design Criteria," September 29, 1989.

1247. NUREG-1217, "Evaluation of Safety Implications of Control Systems in LWR Nuclear Power Plants," U.S. Nuclear Regulatory Commission, June 1989.

1248. NUREG-1218, "Regulatory Analysis for Resolution of USI A-47," U.S. Nuclear Regulatory Commission, July 1989.

1249. SECY-89-255, "Unresolved Safety Issue A-47, 'Safety Implications of Control Systems,'" August 23, 1989. [8908250318]

1250. NRC Letter to All Licensees of Operating Reactors, Applicants for Operating Licenses and Holders of Construction Permits for Light Water Reactor Nuclear Power Plants, "Request for Action Related to Resolution of Unresolved Safety Issue A-47, 'Safety Implication of Control Systems in LWR Nuclear Power Plants' Pursuant to 10 CFR 50.54(f) - Generic Letter 89-19,'" September 20, 1989. [8909200223]

1251. Federal Register Notice 54 FR 36922, "Issuance and Availability of NUREG-1217, 'Evaluation of Safety Implications of Control Systems in LWR Nuclear Power Plants - Technical Findings Related to USI A-47,' and NUREG-1218, 'Regulatory Analysis for Resolution of USI A-47,'" September 5, 1989.

1252. Memorandum for T. King from C. Serpan, "Reevaluation of Issue 15, 'Radiation Effects on Reactor Vessel Supports,'" September 30, 1988. [9704100071]

1253. ORNL/TM-10444, "Evaluation of HFIR Pressure-Vessel Integrity Considering Radiation Embrittlement," Oak Ridge National Laboratory, April 1988.

1254. NUREG/CR-5320, "Impact of Radiation Embrittlement on Integrity of Pressure Vessel Supports for Two PWR Plants," U.S. Nuclear Regulatory Commission, January 1989.

1255. UCLA-ENG-76113, "Some Probabilistic Aspects of the Seismic Risk of Nuclear Reactors," University of California, Los Angeles, December 1976.

1256. SECY-89-180, "Generic Safety Issue 15, 'Radiation Effects on Reactor Vessel Supports,'" June 13, 1989. [8906190110]

1257. NUREG/CR-5210, "Technical Findings Document for Generic Issue 51: Improving the Reliability of Open-Cycle Service-Water Systems," U.S. Nuclear Regulatory Commission, August 1988.

1258. NUREG/CR-5234, "Value/Impact Analysis for Generic Issue 51: Improving the Reliability of Open-Cycle Service-Water Systems," U.S. Nuclear Regulatory Commission, February 1989.

1259. NRC Letter to All Holders of Operating Licenses or Construction Permits for Nuclear Power Plants, "Service Water System Problems Affecting Safety-Related Equipment (Generic Letter 89-13)," July 18, 1989. [8907180211]

1260. Memorandum for J. Taylor from E. Beckjord, "Closeout of GI-51, 'Improving the Reliability of Open-Cycle Service Water Systems,'" August 10, 1989. [9704100044]

1261. Federal Register Notice 54 FR 31268, "'Standard Review Plan for the Review of Safety Analysis Reports for Nuclear Power Plants'; Issuance and Availability Revised SRP Sections 2.4.2 and 2.4.3," July 27, 1989.

1262. NRC Letter to All Licensees of Operating Reactors and Holders of Construction Permits, "Potential for Increased Roof Loads and Plant Area Flood Runoff Depth at Licensed Nuclear Power Plants Due to Recent Change in Probable Maximum Precipitation Criteria Developed by the National Weather Service (Generic Letter 89-22)," October 19, 1989. [8910180273]

1263. Memorandum for J. Taylor from E. Beckjord, "Close-out of Generic Safety Issue No. 103, 'Design for Probable Maximum Precipitation,'" November 28, 1989. [8912180025]

1264. Memorandum for V. Stello from S. Chilk, "Degree Operators: Advance Notice of Rulemaking," January 23, 1986. [8601280245]

1265. Federal Register Notice 54 FR 33639, "Education for Senior Reactor Operators and Shift Supervisors at Nuclear Power Plants; Policy Statement," August 15, 1989.

1266. Federal Register Notice 54 FR 33568, "Education and Experience Requirements for Senior Reactor Operators and Supervisors at Nuclear Power Plants; Withdrawal of Proposed Rulemaking," August 15, 1989.

1267. NUREG-1267, "Technical Resolution of Generic Safety Issue A-29," U.S. Nuclear Regulatory Commission, September 1989.

1268. Memorandum for J. Taylor from E. Beckjord, "Resolution of Generic Safety Issue A-29, 'Nuclear Power Plant Design for Reduction of Vulnerability to Industrial Sabotage,'" October 6, 1989. [8910190129]

1269. NUREG/CR-3453, "Electronic Isolators Used in Safety Systems of U.S. Nuclear Power Plants," U.S. Nuclear Regulatory Commission, March 1986.

1270. Memorandum for B. Morris from B. Sheron, "Proposed Generic Issue on Leakage Through Electrical Isolators," June 23, 1987. [9704100047]

1271. Memorandum for T. Speis from R. Bernero, "Request for Prioritization of Potential Generic Issue Per Office Letter No. 40," August 4, 1985. [8508120299]

1272. Memorandum for R. Mattson from F. Rosa, "Combustion Engineering Standard Technical Specifications (NUREG-0212) - Proposed Revision 3 - Relay Testing," October 8, 1982. [8211030387]

1273. NUREG-0693, "Analysis of Ultimate Heat Sink Cooling Ponds," U.S. Nuclear Regulatory Commission, November 1980.

1274. NUREG-0733, "Analysis of Ultimate Heat-Sink Spray Ponds," U.S. Nuclear Regulatory Commission, August 1981.

1275. NUREG-0858, "Comparison Between Field Data and Ultimate Heat Sink Cooling Pond and Spray Pond Models," U.S. Nuclear Regulatory Commission, September 1982.

1276. Regulatory Guide 1.27, "Ultimate Heat Sink for Nuclear Power Plants," U.S. Nuclear Regulatory Commission, (Rev. 2) January 1976.

1277. NUREG/CR-4120, "Mathematical Modeling of Ultimate Heat Sink Cooling Ponds," U.S. Nuclear Regulatory Commission, March 1985.

1278. "Performance Model for Ultimate Heat Spray Ponds," Journal of Energy Engineering, Vol. 112, No. 2, August 1986.

1279. "Method for Analysis of Ultimate Heat Sink Cooling Tower Performance," University of Illinois at Urbana-Champaign, April 1986. [9704090166]

1280. Memorandum for C. Ader from K. Kniel, "Request for Prioritization of New Generic Safety Issue 'Loss of Essential Service Water in LWRs,'" May 2, 1990. [9704090120]

1281. Memorandum for W. Minners from F. Rowsome, "A New Generic Safety Issue: Accident Management," April 16, 1985. [8505080417]

1282. SECY-88-147, "Integration Plan for Closure of Severe Accident Issues," May 25, 1988. [8806030338]

1283. Memorandum for C. Ader from W. Minners, "GI 116, Accident Management," May 9, 1990. [9704090138]

1284. Memorandum for J. Olshinski from D. Eisenhut, "Control Rod Guide Tube Pin Failures and Peening Damage on Integrity of Steam Generator Tube to Tubesheet Welds and Tube Ends -- North Anna Power Station, Unit No. 1 (NA-1)," December 13, 1982. [8212270164]

1285. EPRI NP-5544, "Nuclear Unit Operating Experience: 1985-1986 Update," Electric Power Research Institute, December 1987.

1286. Memorandum for M. Virgilio from S. Newberry, "Proposed Research Programs to Support SICB Regulation Needs," April 26, 1990. [9005090104]

1287. Memorandum for F. Gillespie, et. al., from T. Speis, "CRGR Combined Packages for the Proposed Resolution of Generic Issue 70, 'Power Operated Relief Valve and Block Valve Reliability,' and Generic Issue 94, 'Additional Low-Temperature Overpressure Protection for Light-Water Reactors,'" December 7, 1988. [9507280258]

1288. SECY-90-232, "Evaluation of the Need for Primary System High Capacity Manual Venting Capability on Combustion Engineering (CE) Plants Without PORVs (GI-84)," June 28, 1990. [9007020274]

1289. Letter to K. Carr from C. Michelson, "Generic Issue - 84, Combustion Engineering Plants Without Power Operated Relief Valves," June 12, 1990. [9006220172]

1290. NRC Letter to All Pressurized Water Reactor Licensees and Construction Permit Holders, "Resolution of Generic Issue 70, 'Power-Operated Relief Valve and Block Valve Reliability,' and Generic Issue 94, 'Additional Low-Temperature Overpressure Protection for Light-Water Reactors,' Pursuant to 10 CFR 50.54(f) (Generic Letter 90-06)," June 25, 1990. [9006200120]

1291. NUREG-1326, "Regulatory Analysis for the Resolution of Generic Issue 94, 'Additional Low-Temperature Overpressure Protection for Light-Water Reactors,'" U.S. Nuclear Regulatory Commission, December 1989.

1292. Memorandum for J. Taylor from E. Beckjord, "Close-out of Generic Issue 70, 'Power-Operated Relief Valve and Block Valve Reliability,' and Generic Issue 94, 'Additional Low-Temperature Overpressure Protection for Light-Water Reactors,'" July 26, 1990. [9507280267]

1293. NUREG-1316, "Technical Findings and Regulatory Analysis Related to Generic Issue 70," U.S. Nuclear Regulatory Commission, December 1989.

1294. Memorandum for F. Gillespie from E. Beckjord, "Resolutions of Generic Issue 70, 'Power Operated Relief Valve and Block Valve Reliability,' and Generic Issue 94, 'Additional Low-Temperature Overpressure Protection for Light-Water Reactors,'" November 16, 1989. [8911290064]

1295. SECY-90-153, "Staff Conclusions Relative to the Classification of PORVs as Safety Grade," April 27, 1990. [9005030123]

1296. Information Notice No. 90-19, "Potential Loss of Effective Volume for Containment Recirculation Spray at PWR Facilities," U.S. Nuclear Regulatory Commission, March 14, 1990. [9003080213]

1297. IE Bulletin No. 83-01, "Failure of Reactor Trip Breakers (Westinghouse DB-50) to Open on Automatic Trip Signal," U.S. Nuclear Regulatory Commission, February 25, 1983. [8212060367]

1298. IE Bulletin No. 83-04, "Failure of the Undervoltage Trip Function of Reactor Trip Breakers," U.S. Nuclear Regulatory Commission, March 11, 1983. [8212060380]

1299. IE Bulletin No. 83-08, "Electrical Circuit Breakers With an Undervoltage Trip Feature in Use in Safety-Related Applications Other that the Reactor Trip System," U.S. Nuclear Regulatory Commission, December 28, 1983. [8312120090]

1300. Memorandum for J. Taylor from E. Beckjord, "Resolution of Generic Safety Issue 75, 'Generic Implications of Salem ATWS - QA,'" May 18, 1990. [9507280290]

1301. Memorandum for W. Dircks from R. Minogue, "Preliminary Survey of Requirements and Guidance by Functional Areas for Operating Nuclear Power Plants, Dated February 1984," August 21, 1984. [8409110305]

1302. Memorandum for E. Beckjord from W. Minners, "Generic Issue 131, 'Potential Seismic Interaction Involving the Movable In-Core Flux Mapping System Used in Westinghouse Plants,'" July 18, 1990. [9007240192]

1303. NRC Letter to All Power Reactor Licensees and Applicants, "Relaxation of Staff Position in Generic Letter 83-28, Item 2.2 Part 2, 'Vendor Interface for Safety-Related Components' (Generic Letter No. 90-03)," March 20, 1990. [9003140089]

1304. IE Bulletin No. 77-02, "Potential Failure Mechanism in Certain Westinghouse (W) AR Relays With Latch Attachments," U.S. Nuclear Regulatory Commission, September 12, 1977. [7909050215]

1305. IE Bulletin No. 79-09, "Failures of GE Type AK-2 Circuit Breaker in Safety Related Systems," U.S. Nuclear Regulatory Commission, April 17, 1979. [7905010083]

1306. IE Circular No. 81-12, "Inadequate Periodic Test Procedure of PWR Protection System," U.S. Nuclear Regulatory Commission, July 22, 1981. [8103300406]

1307. NUREG-1372, "Regulatory Analysis for the Resolution of Generic Issue C-8: 'Main Steam Isolation Valve Leakage and LCS Failure,'" U.S. Nuclear Regulatory Commission, June 1990.

1308. NUREG-1169, "Resolution of Generic Issue C-8," U.S. Nuclear Regulatory Commission, August 1986.

1309. NUREG/CR-5397, "Value-Impact Analysis of Regulatory Options for Resolution of Generic Issue C-8: MSIV Leakage and LCS Failure," U.S. Nuclear Regulatory Commission, May 1990.

1310. Memorandum for J. Taylor from E. Beckjord, "Resolution of Generic Safety Issue C-8," March 15, 1990. [9507280304]

1311. IE Information Notice No. 82-09, "Cracking in Piping of Makeup Coolant Lines at B&W Plants," U.S. Nuclear Regulatory Commission, March 31, 1982. [8202040131]

1312. IE Information No. 82-30, "Loss of Thermal Sleeves in Reactor Coolant System Piping at Certain Westinghouse PWR Power Plants," U.S. Nuclear Regulatory Commission, July 26, 1982. [8204210403]

1313. SECY-82-186, "Status of Make-up Nozzle Cracking in Babcock & Wilcox (B&W) Plants," May 7, 1982. [8205280495]

1314. Letter to R. Gridley (General Electric Company) from D. Eisenhut, "Safety Evaluation for the General Electric Topical Report NEDE-218121-02, 'BWR Feedwater Nozzle/Sparger Final Report, Supplement 2,'" January 14, 1980. [8002070141]

1315. Memorandum for D. Sternberg from R. Clark, "Degradation of Thermal Sleeves - Trojan Nuclear Plant," August 11, 1982. [8208250478]

1316. Memorandum for T. Novak, et al., from J. Knight, "Evaluation of Thermal Sleeve Problems in Westinghouse Plants," October 28, 1983. [8311140192]

1317. Letter to V. Stello from W. Kerr, "ACRS Comments on Nuclear Power Plant Air Cooling Systems," October 15, 1987. [8710210001]

1318. NUREG/CR-4550, "Analysis of Core Damage Frequency from Internal Events," U.S. Nuclear Regulatory Commission, (Vol. 1, Rev. 1) January 1990, (Vol. 2) April 1989, (Vol. 3, Rev. 1) April 1990, (Vol. 4, Rev. 1) August 1989, (Vol. 5, Rev. 1) April 1990, (Vol. 6) April 1987, (Vol. 7, Rev. 1) May 1990.

1319. NRC Information Notice 92-18, "Potential for Loss of Remote Shutdown Capability During a Control Room Fire," U.S. Nuclear Regulatory Commission, February 28, 1992. [9202240025]

1320. SECY-89-170, "Fire Risk Scoping Study: Summary of Results and Proposed Staff Actions," June 7, 1989. [8906260024]

1321. NRC Information Notice 91-53, "Failure of Remote Shutdown System Instrumentation Because of Incorrectly Installed Components," U.S. Nuclear Regulatory Commission, September 4, 1991. [9108280089]

1322. IE Information Notice 87-12, "Potential Problems with Metal Clad Circuit Breakers, General Electric Type AKF-2-25," U.S. Nuclear Regulatory Commission, February 13, 1987. [8702110132]

1323. Memorandum for W. Minners, et al., from F. Rowsome, "Generic Issue 123, 'Deficiencies in the Regulations Suggested by the Davis-Besse Incident,'" November 21, 1985. [8512100189]

1324. ANSI/IEEE-ANS-7-4.3.2-1982, "Application Criteria for Programmable Digital Computer Systems in Safety Systems of Nuclear Power Generating Stations," American Nuclear Society, July 6, 1982.

1325. Regulatory Guide 1.152, "Criteria for Programmable Digital Computer System Software in Safety-Related Systems of Nuclear Power Plants," U.S. Nuclear Regulatory Commission, November 1985. [8511220286]

1326. NUREG-1289, "Regulatory and Backfit Analysis: Unresolved Safety Issue A-45, Shutdown Decay Heat Removal Requirements," U.S. Nuclear Regulatory Commission, November 1988.

1327. NUREG/CR-4639, "Nuclear Computerized Library for Assessing Reactor Reliability (NUCLARR)," U.S. Nuclear Regulatory Commission, (Vol. 1) February 1988, (Vol. 2) September 1988, (Vol. 3) November 1988, (Vol. 4) June 1988, (Vol. 5) June 1988.

1328. AEOD/E804, "Reliability of Non-Safety Related Field Breakers During ATWS Events," Office for Analysis and Evaluation of Operational Data, U.S. Nuclear Regulatory Commission, July 26, 1988. [8905020208]

1329. Memorandum for T. King from K. Kniel, "Request for Prioritization of New Generic Safety Issue 'Reliability of Recirculation Pump Trip (RPT) During an ATWS,'" March 17, 1989. [9507280112]

1330. Memorandum for T. King from W. Minners, "Overpressurization of Containment Penetrations," March 16, 1989. [9507280122]

1331. NUREG/CR-4220, "Reliability Analysis of Containment Isolation Systems," U.S. Nuclear Regulatory Commission, June 1985.

1332. NUREG-0797, "Safety Evaluation Report Related to the Operation of Comanche Peak Steam Electric Station, Units 1 and 2," U.S. Nuclear Regulatory Commission, (Supplement 9) March 1985.

1333. NSAC-148, "Service Water Systems and Nuclear Plant Safety," Electric Power Research Institute, May 1990.

1334. NUREG/CR-2797, "Evaluation of Events Involving Service Water Systems in Nuclear Power Plants," U.S. Nuclear Regulatory Commission, November 1982.

1335. Memorandum for W. Minners from F. Rowsome, "A Candidate Generic Safety Issue," December 11, 1984. [8501090105]

1336. Memorandum for B. Morris from L. Shao, "Resolution of Generic Issue 119.2," July 16, 1990. [9507280130]

1337. Memorandum for J. Taylor from E. Beckjord, "Proposed Resolution and Closeout of Generic Issue 135, 'Steam Generator and Steam Line Overfill Issues,'" March 29, 1991. [9507280149]

1338. RES Office Letter No. 7, "Procedures for Identification, Prioritization, Resolution, and Tracking of Generic Issues," February 16, 1996. [9608070117]

1339. Memorandum for All RES Employees from E. Beckjord, "Withdrawal of RES Office Letter No. 3, 'Procedure and Guidance for the Resolution of Generic Issues,'" June 2, 1994. [9704100042]

1340. Federal Register Notice 51 FR 12502, "10 CFR Part 50, Modification of General Design Criterion 4 Requirements for Protection Against Dynamic Effects of Postulated Pipe Ruptures," April 11, 1986.

1341. Federal Register Notice 51 FR 26393, "10 CFR Part 50, Modification of General Design Criterion 4 Requirements for Protection Against Dynamic Effects of Postulated Pipe Ruptures," July 23, 1986.

1342. Federal Register Notice 52 FR 41288, "10 CFR Part 50, Modification of General Design Criterion 4 Requirements for Protection Against Dynamic Effects of Postulated Pipe Ruptures," October 27, 1987.

1343. Federal Register Notice 53 FR 1968, "Standard Review Plan Revision," January 25, 1988.

1344. Federal Register Notice 52 FR 23376, "Standard Review Plan Issuance," June 19, 1987.

1345. NRC Letter to All Operating Licensees, Construction Permit Holders and Applicants for Construction Permits, "Relaxation in Arbitrary Intermediate Pipe Rupture Requirements (Generic Letter 87-11)," June 19, 1987. [8706230486]

1346. Memorandum for Distribution from G. Arlotto, "Termination of Proposed Revision to SRP 3.9.3," October 2, 1986. [8811180136]

1347. Regulatory Guide 1.84, "Design and Fabrication Code Case Acceptability -- ASME III, Division 1," U.S. Nuclear Regulatory Commission, (Rev. 30) October 31, 1994. [9411040236]

1348. Regulatory Guide 1.61, "Damping Values for Seismic Design of Nuclear Power Plants," U.S. Nuclear Regulatory Commission, October 1973. [7907100231]

1349. Memorandum for J. Roe from J. Wermiel, "Closure of Generic Issue No. 133, 'Update Policy on Nuclear Plant Staff Working Hours,'" July 10, 1991. [9107230263]

1350. NRC Information Notice No. 91-36, "Nuclear Plant Staff Working Hours," June 10, 1991. [9106040339]

1351. SECY-90-343, "Status of the Staff Program to Determine How the Lessons Learned from the Systematic Evaluation Program Have Been Factored into the Licensing Bases of Operating Plants," October 4, 1990. [9010150030]

1352. Memorandum for J. Knight, et al., from H. Thompson, "Action Plan for Resolving Failure of Tendon Anchorage at Farley 2 and for Determining Need for Immediate Licensing Action on Other Facilities," June 25, 1985. [8507030479]

1353. NUREG/CR-4712, "Regulatory Analysis of Regulatory Guide 1.35 (Revision 3, Draft 2) - In-Service Inspection of Ungrouted Tendons in Prestressed Concrete Containments," U.S. Nuclear Regulatory Commission, February 1987.

1354. NUREG-1407, "Procedural and Submittal Guidance for the Individual Plant Examination of External Events (IPEEE) for Severe Accident Vulnerabilities," U.S. Nuclear Regulatory Commission, June 1991.

1355. NRC Letter to All Licensees of Operating Pressurized Water Nuclear Power Reactors and Applicants for Operating Licenses (Except for St. Lucie, Unit No. 1), "Natural Circulation Cooldown (Generic Letter No. 81-21)," May 5, 1981. [8105140267]

1356. NRC Letter to All Operating Pressurized Water Reactors (PWR's) (Generic Letter 80-53), June 11, 1980. [8007230099]

1357. ANSI/ANS 2.3, "Estimating Tornado and Extreme Wind Characteristics at Nuclear Power Sites," American National Standards Institute, Inc., October 17, 1983.

1358. Memorandum for H. Thompson from G. Arlotto, "RES Input - Action Plan for Resolving Failure of Tendon Anchorage at Farley-2 and for Determining Need for Immediate Licensing Action on Other Facilities," July 31, 1985. [9312220342]

1359. Memorandum for T. Speis and E. Jordan from J. Knight, "Tendon Anchor Head Failure - Needed Licensing Action at Other Facilities," December 6, 1985. [8512240278]

1360. Regulatory Guide 1.35.1, "Determining Prestressing Forces for Inspection of Prestressed Concrete Containments," U.S. Nuclear Regulatory Commission, July 1990. [9503290310]

1361. Memorandum for E. Jordan from E. Beckjord, "CRGR Review of: 1. Regulatory Guide 1.35, Rev. 3, 'Inservice Inspection of Ungrouted Tendons in Prestressed Concrete Containments,' 2. Regulatory Guide 1.35.1, 'Determining Prestressing Forces for Inspection of Prestressed Concrete Containments,'" July 28, 1989. [8908100273]

1362. Memorandum for E. Beckjord from F. Gillespie, "Generic Concerns Arising from TMI-2 Cleanup," February 21, 1991. [9103010101]

1363. Memorandum for E. Beckjord from F. Gillespie, "Request for Generic Rulemaking Concerning Decommissioning Issues," January 7, 1992. [9201150209]

1364. Federal Register Notice 53 FR 24018, "10 CFR Parts 30, 40, 50, 51, 70, and 72, General Requirements for Decommissioning Nuclear Facilities," June 27, 1988.

1365. Memorandum for Z. Rosztoczy from S. Bajwa, "Generic Issue 148: Smoke Control and Manual Fire Fighting Effectiveness; Generic Issue 149: Adequacy of Fire Barriers," April 3, 1991. [9104080111]

1366. NUREG-1286, "Safety Evaluation Report Related to the Restart of Rancho Seco Nuclear Generating Station, Unit 1 Following the Event of December 26, 1985," U.S. Nuclear Regulatory Commission, October 1987.

1367. Memorandum for W. Russell from A. Thadani, "Task Action Plan for Resolution of Service Water System Problems," June 27, 1991. [9107120290]

1368. NRC Letter to Licensees and Applicants of the Following Pressurized-Water Reactor Nuclear Power Plants: 1. Braidwood Units 1 and 2; 2. Byron Units 1 and 2; 3. Catawba Units 1 and 2; 4. Comanche Peak Units 1 and 2; 5. Cook Units 1 and 2; 6. Diablo Canyon Units 1 and 2; 7. McGuire Units 1 and 2, "Request for Information Related to the Resolution of Generic Issue 130, 'Essential Service Water System Failures at Multi-Unit Sites,' Pursuant to 10 CFR 50.54(f) - Generic Letter 91-13," September 19, 1991. [9109160253]

1369. NUREG-1269, "Loss of Residual Heat Removal System, Diablo Canyon Unit 2, April 10, 1987," U.S. Nuclear Regulatory Commission, June 1987.

1370. SECY-91-283, "Evaluation of Shutdown and Low Power Risk Issues," September 9, 1991. [9109120134]

1371. NUREG/CR-4960, "Control Room Habitability Survey of Licensed Commercial Nuclear Power Generating Stations," U.S. Nuclear Regulatory Commission, October 1988.

1372. Regulatory Guide 4.7, "General Site Suitability Criteria for Nuclear Power Stations," U.S. Nuclear Regulatory Commission, September 1974, (Rev. 1) November 1975. [7907200072]

1373. Regulatory Guide 1.78, "Assumptions for Evaluating the Habitability of a Nuclear Power Plant Control Room During a Postulated Hazardous Chemical Release," U.S. Nuclear Regulatory Commission, June 1974. [8001240567]

1374. Regulatory Guide 1.91, "Evaluations of Explosions Postulated to Occur on Transportation Routes Near Nuclear Power Plants," U. S. Nuclear Regulatory Commission, January 1975, (Rev. 1) February 1978 [8808230010].

1375. Regulatory Guide 1.95, "Protection of Nuclear Power Plant Control Room Operators Against an Accidental Chlorine Release," U.S. Nuclear Regulatory Commission, February 1975, (Rev. 1) January 1977 [8001240569].

1376. Letter to D. Solberg (NRC) from T. Charlton (INEL), "Transmittal of Letter Report on Turbine Trip Failure Events - TRC-28-88," April 27, 1988. [9502070128]

1377. Memorandum for R. Baer from C. Hrabal, "Prioritization of GI-144, 'SCRAM Without a Turbine/Generator Trip,'" September 24, 1991. [9312220339]

1378. Memorandum for T. King from K. Kniel, "Request for Prioritization of New Generic Safety Issue 'SCRAM Without a Turbine/Generator Trip,'" March 22, 1988. [9312220315]

1379. NUREG/CR-5653, "Recriticality in a BWR Following a Core Damage Event," U.S. Nuclear Regulatory Commission, November 1990.

1380. Memorandum for W. Minners from B. Sheron, "Request for Prioritization of Potential Generic Issues," September 4, 1984. [8409170085]

1381. Memorandum for W. Minners from B. Sheron, "Update of Generic Issue Management Control System (GIMCS)," July 5, 1991. [9312220300]

1382. NUREG-1365, "Revised Severe Accident Research Program Plan," U.S. Nuclear Regulatory Commission, August 1989, (Rev. 1) December 1992.

1383. Memorandum for R. Baer from S. Diab, "Supporting Analyses for Prioritization of Issue 110, 'Equipment Protective Devices on Engineered Safety Features,'" April 16, 1992. [9312220226]

1384. Memorandum for W. Dircks for R. Fraley, "Bolt Failures in Nuclear Power Plants," October 20, 1981. [8201200698]

1385. NRC Letter to All Holders of Operating Licenses or Construction Permits for Nuclear Power Plants, "Generic Safety Issue 29, 'Bolting Degradation or Failure in Nuclear Power Plants,' (Generic Letter 91-17)," October 17, 1991. [9110150302]

1386. NRC Letter to All Licensees of Operating PWRs and Holders of Construction Permits for PWRs, "Boric Acid Corrosion of Carbon Steel Reactor Pressure Boundary Components in PWR Plants (Generic Letter 88-05)," March 17, 1988. [8803220364]

1387. NRC Letter to All Licensees, Applicants and Holders of Operating Licenses Not Required to be Reviewed for Seismic Adequacy of Equipment Under the Provisions of USI A-46, 'Seismic Qualification of Equipment in Operating Plants,' "Verification of Seismic Adequacy of Mechanical and Electrical Equipment in Operating Reactors, Unresolved Safety Issue (USI) A-46 (Generic Letter 87-03)," February 27, 1987. [8703060307]

1388. NRC Bulletin No. 89-02, "Stress Corrosion Cracking of High-Hardness Type 410 Stainless Steel Internal Preloaded Bolting in Anchor Darling Model S350W Swing Check Valves or Valves of Similar Design," U.S. Nuclear Regulatory Commission, July 19, 1989. [8907110441]

1389. NRC Compliance Bulletin No. 87-02, "Fastener Testing to Determine Conformance with Applicable Material Specifications," U.S. Nuclear Regulatory Commission, November 6, 1987 [8711050040], (Supplement 1) April 22, 1988 [8804180142], (Supplement 2) June 10, 1988 [8806090301].

1390. NRC Information Notice No. 89-22, "Questionable Certification of Fasteners," U.S. Nuclear Regulatory Commission, March 3, 1989. [8902270158]

1391. NRC Information Notice No. 89-56, "Questionable Certification of Material Supplied to the Defense Department by Nuclear Suppliers," U.S. Nuclear Regulatory Commission, July 20, 1889 [8907140274], (Supplement 1) November 22, 1989 [8911160058], (Supplement 2) July 19, 1991 [9107120259].

1392. NRC Information Notice No. 89-70, "Possible Indications of Misrepresented Vendor Products," U.S. Nuclear Regulatory Commission, October 11, 1989 [8910040381], (Supplement 1) April 26, 1990 [9004200525].

1393. IE Information Notice No. 86-25, "Traceability and Material Control of Material and Equipment, Particularly Fasteners," U.S. Nuclear Regulatory Commission, April 11, 1986. [8604090451]

1394. Memorandum for J. Taylor from E. Beckjord, "Resolution of Generic Safety Issue 29, 'Bolting Degradation or Failure in Nuclear Power Plants,'" October 25, 1991. [9312220296]

1395. NUREG-1339, "Resolution of Generic Safety Issue 29: Bolting Degradation or Failure in Nuclear Power Plants," U.S. Nuclear Regulatory Commission, June 1990.

1396. Federal Register Notice 56 FR 36081, "10 CFR Parts 21 and 50, Criteria and Procedures for the Reporting of Defects and Conditions of Construction Permits," July 31, 1991.

1397. SECY-91-150, "Proposed Amendments to 10 CFR Part 21, 'Reporting of Defects and Noncompliance' and 10 CFR 50.55(e), 'Conditions of Construction Permits,'" May 22, 1991. [9106040262]

1398. NUREG-1445, "Regulatory Analysis for the Resolution of Generic Safety Issue-29: Bolting Degradation or Failure in Nuclear Power Plants," U.S. Nuclear Regulatory Commission, September 1991.

1399. NRC Letter to All Holders of Operating Licenses, "Resolution of Generic Issue A-30, 'Adequacy of Safety-Related DC Power Supplies,' Pursuant to 10 CFR 50.54(f) (Generic Letter 91-06)," April 29, 1991. [9104170256]

1400. NRC Letter to All Holders of Operating Licenses, "Resolution of Generic Issues 48, 'LCOs for Class 1E Vital Instrument Buses,' and 49, 'Interlocks and LCOs for Class 1E Tie Breakers' Pursuant to 10 CFR 50.54(f) (Generic Letter 91-11)," July 18, 1991. [9107160296]

1401. NUREG/CR-5414, "Technical Findings for Proposed Integrated Resolution of Generic Issue 128, Electric Power Reliability," U.S. Nuclear Regulatory Commission, November 1989.

1402. Memorandum for J. Taylor from E. Beckjord, "Resolution of GI-128, Electrical Power Reliability,'" September 12, 1991. [9312220229]

1403. NUREG/CR-5406, "BWR Reactor Water Cleanup System Flexible Wedge Gate Isolation Valve Qualification and High Energy Flow Interruption Test," U.S. Nuclear Regulatory Commission, (Vol. 1) October 1989, (Vol. 2) October 1989, (Vol. 3) October 1989.

1404. NUREG/CR-5558, "Generic Issue 87: Flexible Wedge Gate Valve Test Program," U.S. Nuclear Regulatory Commission, January 1991.

1405. SECY-82-1B, "Proposed Commission Policy Statement on Severe Accidents and Related Views on Nuclear Reactor Regulation," November 24, 1982. [8301120513]

1406. Memorandum for J. Taylor from E. Beckjord, "Technical Resolution of Generic Issue 87, 'Failure of HPCI Steam Line Without Isolation,'" December 9, 1991. [9312220344]

1407. NUREG/CR-4681, "Enclosure Environment Characterization Testing for the Base Line Validation of Computer Fire Simulation Codes," U.S. Nuclear Regulatory Commission, March 1987.

1408. NUREG/CR-5526, "Analysis of Risk Reduction Measures Applied to Shared Essential Service Water Systems at Multi-Unit Sites," U.S. Nuclear Regulatory Commission, June 1991.

1409. NUREG-1421, "Regulatory Analysis for the Resolution of Generic Issue 130: Essential Service Water System Failures at Multi-Unit Sites," U.S. Nuclear Regulatory Commission, June 1991.

1410. Memorandum for J. Taylor from E. Beckjord, "Resolution of Generic Issue 130, 'Essential Service Water System Failures at Multi-Unit Sites,'" September 23, 1991. [9312220347]

1411. NUREG/CR-4893, "Technical Findings Report for Generic Issue 135, Steam Generator and Steam Line Overfill Issues," U.S. Nuclear Regulatory Commission, May 1991.

1412. Memorandum for J. Taylor, et al., form S. Chilk "SECY-91-132 - Evaluation of the Feasibility of Initiating a Consensus Process to Address Issues Related to the Below Regulatory Concern Policy," June 28, 1991. [9109060094]

1413. SECY-92-045, "Enhanced Participatory Rulemaking Process," February 7, 1992. [9202130092]

1414. Memorandum for K. Kniel from G. Lainas, "Proposed Generic Issue Deinerting Upon Discovery of Reactor Coolant System Leakage," August 1, 1986. [8608110015]

1415. Letter to D. Basdekas (NRC) from J. Lambright (SNL), "Generic Issue 148, 'Smoke Control and Manual Fire Fighting Effectiveness,'" March 4, 1992. [9502070165]

1416. Memorandum for B. Morris from W. Minners, "Prioritization of Proposed New Generic Issue," December 4, 1989. [9312220350]

1417. NUREG/CR-5856 "Identification and Evaluation of PWR In-Vessel Severe Accident Management Strategies," U.S. Nuclear Regulatory Commission, March 1992.

1418. Memorandum for T. Murley from E. Beckjord, "A New Generic Issue: Multiple Steam Generator Tube Leakage," June 16, 1992. [9212040356]

1419. Memorandum for C. Serpan from J. Muscara, "Steam Generator Tube Inspection, Integrity and Plugging Issues," March 16, 1992. [9212040327]

1420. Letter to J. Cross (Portland General Electric Company) from L. Kokajko (NRC), "Issuance of Amendment for Trojan Nuclear Plant (TAC No. M82287)," February 5, 1992. [9202130137]

1421. Letter to the NRC from J. Cross (Portland General Electric Company), "Request for Additional Information Regarding Trojan Steam Generator Tube Structural Integrity Report

and License Change Application (LCA) 219 Dated January 3, 1992 (TAC No. M82287)," January 16, 1992. [9201220023]

1422. NUREG/CR-0718, "Steam Generator Tube Integrity Program Phase I Report," U.S. Nuclear Regulatory Commission, September 1979.

1423. NUREG-1350, "Nuclear Regulatory Commission Information Digest," U.S. Nuclear Regulatory Commission, (Vol. 4) March 1992, (Vol. 7) March 1995.

1424. EGG-PE-6670, "Generic Cost Analysis for Steam Generator Repairs and Replacement," Idaho National Engineering Laboratory, August 1984.

1425. SECY-91-270, "Interim Guidance on Staff Implementation of the Commission's Safety Goal Policy," August 27, 1991. [9109030213]

1426. Memorandum for R. Emrit from G. Burdick, "Multiple Steam Generator Tube Leakage," October 30, 1992. [9502070227]

1427. SECY-92-292, "Advance Notice of Proposed Rulemaking on Severe Accident Plant Performance Criteria for Future LWRs," August 21, 1992. [9208250010]

1428. NUREG/CR-4470, "Survey and Evaluation of Vital Instrumentation and Control Power Supply Events," U.S. Nuclear Regulatory Commission, August 1986.

1429. NUREG-1455, "Transformer Failure and Common-Mode Loss of Instrument Power at Nine Mile Point Unit 2 on August 13, 1991," U.S. Nuclear Regulatory Commission, October 1991.

1430. Memorandum for T. Martin et al., from T. Murley, "Preliminary Results from Individual Plant Examinations (IPE)," April 22, 1991. [9105020194]

1431. NRC Letter to All Holders of Operating Licenses or Construction Permits for Pressurized Water Reactors (PWRs), "Resolution of Generic Issue 79, 'Unanalyzed Reactor Vessel (PWR) Thermal Stress During Natural Convection Cooldown' (Generic Letter 92-02)," March 6, 1992. [9203030209]

1432. Memorandum for J. Taylor from E. Beckjord, "Resolution of Generic Issue 79, 'Unanalyzed Reactor Vessel (PWR) Thermal Stress During Natural Convection Cooldown,'" May 4, 1992. [9312220157]

1433. Memorandum for C. Heltemes from F. Gillespie, "Generic Issue 163, 'Multiple Steam Generator Tube Leakage,'" November 24, 1992. [9212040320]

1434. Memorandum for E. Beckjord from L. Shao, "Interim Plugging Criteria for Trojan Nuclear Plant," December 9, 1992. [9212140066]

1435. Memorandum for F. Gillespie from C. Heltemes, "GI-163, 'Multiple Steam Generator Tube Leakage,'" September 28, 1992. [9212040379]

1436. Federal Register Notice 51 FR 27817, "10 CFR Parts 50 and 73, Miscellaneous Amendments Concerning Physical Protection of Nuclear Power Plants," August 4, 1986.

1437. NRC Letter to All Power Reactor Licensees, "Implementation of 10 CFR 73.55 Miscellaneous Amendments and Search Requirements (Generic Letter 87-08)," May 11, 1987. [8705110372]

1438. Regulatory Guide 5.65, "Vital Area Access Controls, Protection of Physical Security Equipment, and Key and Lock Controls," U.S. Nuclear Regulatory Commission, September 1986. [8610030129]

1439. Memorandum for J. Taylor from E. Beckjord, "Resolution of Generic Issue 151 'Reliability of ATWS Recirculation Pump Trip in BWRs,'" September 29, 1992. [9312220159]

1440. NUREG/CR-2336, "Steam Generator Tube Integrity Program," U.S. Nuclear Regulatory Commission, August 1988.

1441. Memorandum for T. Murley from E. Beckjord, "Interim Plugging Criteria for Trojan Nuclear Plant," January 5, 1993. [9301110331]

1442. Memorandum for T. Murley from E. Beckjord, "Interim Plugging Criteria for Trojan Nuclear Plant," January 15, 1993. [9301250251]

1443. SECY-90-160, "Proposed Rule on Nuclear Power Plant License Renewal," May 3, 1990. [9005080305]

1444. NUREG-1412, "Foundation for the Adequacy of the Licensing Bases," U.S. Nuclear Regulatory Commission, December 1991.

1445. NUREG/CR-6010, "History and Current Status of Generation 3 Thermal Sleeves in Westinghouse Nuclear Power Plants," U.S. Nuclear Regulatory Commission, July 1992.

1446. Memorandum for J. Taylor from E. Beckjord, "Technical Resolution of Generic Issue 73, 'Detached Thermal Sleeves,'" September 2, 1992. [9210070203]

1447. Memorandum for D. Eisenhut, et al., from R. Vollmer, "Evaluation of Allegations Regarding Class 1 Piping Design Deficiencies (TAC #49242)," September 1, 1983. [8309210477]

1448. IE Information Notice No. 83-80, "Use of Specialized 'Stiff' Pipe Clamps," November 23, 1983. [8311010020]

1449. NUREG/CR-2405, "Subsystem Fragility - Seismic Safety Margins Research Program (Phase 1)," U.S. Nuclear Regulatory Commission, February 1982.

1450. Memorandum for J. Taylor from E. Beckjord, "Resolution of Generic Issue 113, 'Dynamic Qualification and Testing of Large Bore Hydraulic Snubbers,'" August 27, 1992. [9312220197]

1451. Memorandum for J. Taylor from E. Beckjord, "Resolution of Generic Issue (GI) 121, 'Hydrogen Control for PWR Dry Containments,'" March 24, 1992. [9312220194]

1452. Memorandum for W. Minners from F. Gillespie, "Prioritization of Generic Issue 78, 'Monitoring of Design Basis Transient Fatigue Limits for Reactor Coolant System,'" June 10, 1992. [9312220188]

1453. NRC Information Notice 92-06, "Reliability of ATWS Mitigation System and Other NRC Required Equipment Not Controlled by Plant Technical Specifications," January 15, 1992 [9201080305], (Supplement 1) July 1, 1993 [9306250303].

1454. Memorandum for W. Minners from B. Sheron, "Proposed Generic Issue 'RHR Pumps Inside Containment,'" August 23, 1985. [8508290373]

1455. NUREG/CR-5300, "Integrated Reliability and Risk Analysis System (IRRAS) Version 2.5," U.S. Nuclear Regulatory Commission, (Vol. 1) March 1991.

1456. NUREG/CR-5303, "System Analysis and Risk Assessment System (SARA) Version 4.0," U.S. Nuclear Regulatory Commission, (Vol. 1) February 1992, (Vol. 2) January 1992.

1457. Letter to C. Rourk (NRC) from N. Anderson (INEL), "Transmittal of Final Report, 'Analysis of Plant Specific Responses for the Resolution of Generic Issue A-30, Adequacy of Safety-Related DC Power Supplies,' (FIN D6025) NRA-20-92," July 9, 1992. [9502070242]

1458. SECY-87-297, "MARK I Containment Performance Program Plan," December 8, 1987. [8803080354]

1459. SECY-89-017, "MARK I Containment Performance Improvement Program," January 23, 1989. [8903090205]

1460. Memorandum for V. Stello from S. Chilk, "SECY-89-017 - MARK I Containment Performance Improvement Program," July 11, 1989. [8907270013]

1461. SECY-91-316, "Status of Severe Accident Research," October 7, 1991. [9110160271]

1462. Letter to D. Grace (BWR Owners Group) from A. Thadani (NRC), "Safety Evaluation of 'BWR Owners' Group - Emergency Procedure Guidelines, Revision 4,' NEDO-31331, March 1987," September 12, 1988. [8809190198]

1463. NRC Letter to All Holders of Operating Licenses for Nuclear Power Reactors With Mark I Containments, "Installation of a Hardened Wetwell Vent (Generic Letter No. 89-16)," September 1, 1989. [8909010375]

1464. NUREG/CR-5662, "Hydrogen Combustion, Control, and Value-Impact Analysis for PWR Dry Containments," U.S. Nuclear Regulatory Commission, June 1991.

1465. NUREG-1465, "Accident Source Terms for Light-Water Nuclear Power Plants," U.S. Nuclear Regulatory Commission, February 1995.

1466. NUREG/CR-5460, "A Cause-Defense Approach to the Understanding and Analysis of Common Cause Failures," U.S. Nuclear Regulatory Commission, March 1990.

1467. Federal Register Notice 56 FR 31306, "10 CFR 50, RIN 3150-AD00, Monitoring the Effectiveness of Maintenance at Nuclear Power Plants," July 10, 1991.

1468. Memorandum for E. Beckjord from F. Gillespie, "Potential Generic Issue - Adequacy of Emergency and Essential Lighting - (RES Office Letter No. 1, Rev. 1)," September 14, 1990. [9009210192]

1469. NUREG/CR-4834, "Recovery Actions in PRA for the Risk Methods Integration and Evaluation Program (RMIEP)," U.S. Nuclear Regulatory Commission, (Vol. 1) June 1987.

1470. NUREG/CR-4674, "Precursors to Potential Severe Core Damage Accidents," U.S. Nuclear Regulatory Commission, (Vols. 15 and 16) September 1992.

1471. NRC Information Notice No. 90-69, "Adequacy of Emergency and Essential Lighting," U.S. Nuclear Regulatory Commission, October 31, 1990. [9010250054]

1472. NUREG-1272, "Office for Analysis and Evaluation of Operational Data 1991 Annual Report," U.S. Nuclear Regulatory Commission, (Vol. 6, No. 1) August 1992.

1473. Memorandum for J. Taylor from S. Chilk, "SECY-89-102 - Implementation of the Safety Goals," June 15, 1990. [9007090094]

1474. Letter to W. Conway (Arizona Public Service Company) from C. Trammell (NRC), "Review of Eddy-Current Inspections of Steam Generator Tubes - Palo Verde Nuclear Generating Station, Unit No. 2 (TAC No. M86178)," June 8, 1993. [9306100267]

1475. NUREG-1477, "Voltage-Based Interim Plugging Criteria for Steam Generator Tubes," U.S. Nuclear Regulatory Commission, (Draft) June 1993.

1476. Memorandum for T. Murley from E. Beckjord, "Recommendations Regarding Revision of Standard Review Plan Sections Related to 'Stiff Pipe Clamps,'" August 12, 1992. [9312220199]

1477. Memorandum for T. Speis from F. Gillespie, "Consideration of New Generic Issue on 'Support Flexibility of Equipment and Components,'" January 30, 1989. [8903010215]

1478. NUREG/CR-2999, "Final Report USNRC Anchor Bolt Study: Data Survey and Dynamic Testing," U.S. Nuclear Regulatory Commission, December 1982.

1479. SECY-93-108, "Revised Guidelines for Prioritization of Generic Safety Issues," April 28, 1993. [9308230261]

1480. EPRI NP-6154, "Proceedings: EPRI/NRC/TPC Workshop on Seismic Soil-Structure Interaction Analysis Techniques Using Data From Lotung, Taiwan," Electric Power Research Institute, (Vol. 1) March 1989, (Vol. 2) March 1989.

1481. Memorandum for E. Beckjord from T. Murley, "Potential New Generic Issues," September 25, 1991. [9110250132]

1482. Memorandum for T. Murley from E. Beckjord, "Prioritization of Generic Issue 161, 'Associated Circuits,'" March 12, 1993. [9312220201]

1483. Regulatory Guide 1.9, "Selection, Design, and Qualification of Diesel-Generator Units Used as Standby (Onsite) Electric Power Systems at Nuclear Power Plants," March 1971, (Rev. 1) November 1978, (Rev. 2) December 1979 [8001220580], (Rev. 3) July 1993 [9308180045].

1484. Regulatory Guide 1.160, "Monitoring the Effectiveness of Maintenance at Nuclear Power Plants," U.S. Nuclear Regulatory Commission, June 1993 [9306250035], (Rev. 1) January 1995 [9501300137].

1485. Federal Register Notice 58 FR 41813, "Regulatory Guide; Withdrawal," August 5, 1993.

1486. Memorandum for J. Taylor from E. Beckjord, "Resolution of Generic Safety Issue B-56, 'Diesel Generator Reliability,'" June 29, 1993. [9312220205]

1487. NRC Letter to All Licensees of Operating Reactors, Applicants for An Operating License, and Holders of Construction Permits, "Proposed Staff Actions to Improve and Maintain Diesel Generator Reliability (Generic Letter 84-15)," July 2, 1984. [8407020206]

1488. Memorandum for E. Jordan from T. Novak, "Engineering Evaluation Report - Pump Damage Due to Low Flow Cavitation (AEOD/E807)," October 18, 1988. [9312220206, 8811170140, 8810250191]

1489. NRC Bulletin No. 88-04, "Potential Safety-Related Pump Loss," U.S. Nuclear Regulatory Commission, May 5, 1988. [8804290177]

1490. NUREG/CR-5706, "Potential Safety-Related Pump Loss: An Assessment of Industry Data," U.S. Nuclear Regulatory Commission, June 1991.

1491. Memorandum for J. Norberg from R. Jones, "Review of Responses to Bulletin 88-04," July 22, 1991. [9108010062]

1492. NUREG/CR-5404, "Auxiliary Feedwater System Aging Study," U.S. Nuclear Regulatory Commission, (Vol. 1) March 1990, (Vol. 2) July 1993.

1493. Memorandum for V. Stello from S. Chilk, "Staff Requirements - Briefing on Status of Unresolved Safety/Generic Issues, 10:00 a.m., Wednesday, October 21, 1987, Commissioners' Conference Room, D. C. Office (Open to Public Attendance)," November 6, 1987. [8711100418]

1494. NUREG/CR-5604, "Assessment of ISLOCA Risk - Methodology and Application to a Babcock and Wilcox Nuclear Power Plant," U.S. Nuclear Regulatory Commission, (Vol. 1) April 1992, (Vol. 2) April 1992, (Vol. 3) April 1992.

1495. NUREG/CR-5744, "Assessment of ISLOCA Risk - Methodology and Application to a Westinghouse Four-Loop Ice Condenser Plant," U.S. Nuclear Regulatory Commission, April 1992.

1496. NUREG/CR-5745, "Assessment of ISLOCA Risk - Methodology and Application to a Combustion Engineering Plant," U.S. Nuclear Regulatory Commission, April 1992.

1497. NUREG/CR-5603, "Pressure-Dependent Fragilities for Piping Components," U.S. Nuclear Regulatory Commission, October 1990.

1498. NUREG/CR-5862, "Screening Methods for Developing Internal Pressure Capacities for Components in Systems Interfacing With Nuclear Power Plant Reactor Coolant Systems," U.S. Nuclear Regulatory Commission, May 1992.

1499. NUREG/CR-5928, "ISLOCA Research Program Final Report," U.S. Nuclear Regulatory Commission, July 1993.

1500. NUREG/CR-5102, "Interfacing System LOCA: Pressurized Water Reactors," U.S. Nuclear Regulatory Commission, February 1989.

1501. NUREG-1463, "Regulatory Analysis for the Resolution of Generic Safety Issue 105: Interfacing System Loss-of-Coolant Accident in Light-Water Reactors," U.S. Nuclear Regulatory Commission, July 1993.

1502. NRC Information Notice 92-36, "Intersystem LOCA Outside Containment," May 7, 1992 [9205010045], (Supplement 1) February 22, 1994 [9402150320].

1503. Memorandum for F. Gillespie from W. Minners, "Proposed Resolution of Generic Issue 105, 'Interfacing Systems LOCA in LWRs," April 2, 1993. [9312220208]

1504. Memorandum for J. Taylor from E. Beckjord, "Technical Resolution of Generic Issue 105 (GI-105) 'Interfacing Systems Loss of Coolant Accident (ISLOCA) in LWRs," June 3, 1993. [9312220210]

1505. Memorandum for J. Taylor from S. Chilk, "SECY-93-108 - Revised Guidelines for Prioritization of Generic Safety Issues," July 23, 1993. [9308270094]

1506. Memorandum for W. Minners from L. Shao, "Closeout of GSI 119.4," July 17, 1992. [9312220212]

1507. Regulatory Guide 1.44, "Control of the Use of Sensitized Stainless Steel," U.S. Atomic Energy Commission, May 1973. [7907100182]

1508. Memorandum for J. Taylor from E. Beckjord, "Final Technical Resolution of Generic Safety Issue 120, 'On-Line Testability of Protection System,'" March 4, 1993. [9502070269]

1509. Letter to J. Taylor from P. Shewmon, "Prioritization of Generic Issue 152, 'Design Basis for Valves that Might Be Subjected to Significant Blowdown Loads,'" April 23, 1993. [9305060143]

1510. Letter to J. Wilkins (ACRS) from J. Taylor (EDO) June 8, 1993. [9306210081, 9305200137]

1511. Memorandum for J. Taylor from E. Beckjord, "Resolution of GI-142, 'Leakage Through Electrical Isolators,'" March 9, 1993. [9312220214]

1512. NUREG-1461, "Regulatory Analysis for the Resolution of Generic Issue 153: Loss of Essential Service Water in LWRs," U.S. Nuclear Regulatory Commission, August 1993.

1513. Memorandum for J. Taylor from E. Beckjord, "Resolution of Generic Issue 153 (GI-153), 'Loss of Essential Service Water in LWRs,'" June 14, 1993. [9312220216]

1514. NUREG/CR-5910, "Loss of Essential Service Water in LWRs (GI-153)," U.S. Nuclear Regulatory Commission, August 1992.

1515. Memorandum for E. Beckjord from T. Murley, "Proposed New Generic Issue: 'Determination of Neutron Fluence to PWR Pressure Vessels,'" October 8, 1992. [9210190215]

1516. Memorandum for T. Murley from E. Beckjord, "Proposed New Generic Issue: Determination of Neutron Fluence to PWR Pressure Vessels," November 30, 1992. [9312220218]

1517. Memorandum for J. Sniezek from T. Murley and E. Beckjord, "Resolution of Fatigue and Environmental Qualification Issues Related to License Renewal," April 1, 1993. [9304270324]

1518. Memorandum for The Chairman, et al., from J. Taylor, "Environmental Qualification of Electric Equipment," May 27, 1993. [9308180153]

1519. SEASF-LR-92-022, "Supplemental Study of Generic Issue No. 153, 'Loss of Essential Service Water in LWRs,'" Science and Engineering Associates, Inc., (Rev. 1) January 1993. [9502070279]

1520. Memorandum for E. Beckjord from T. Murley, "Request to Prioritize a New Generic Issue for Spring-Actuated Safety and Relief Valve Reliability," October 8, 1992. [9312280153]

1521. NUREG/CR-3696, "Potential Human Factors Deficiencies in the Design of Local Control Stations and Operator Interfaces in Nuclear Power Plants," U.S. Nuclear Regulatory Commission, April 1984.

1522. NUREG/CR-3217, "Near-Term Improvements for Nuclear Power Plant Control Room Annunciator Systems," U.S. Nuclear Regulatory Commission, April 1983.

1523. NUREG/CR-3987, "Computerized Annunciator Systems," U.S. Nuclear Regulatory Commission, June 1985.

1524. NUREG/CR-5572, "An Evaluation of the Effects of Local Control Station Design Configurations on Human Performance and Nuclear Power Plant Risk," U.S. Nuclear Regulatory Commission, September 1990.

1525. Memorandum for J. Taylor from E. Beckjord, "Termination of Work on Generic Safety Issue HF5.1 'Local Control Stations,'" June 29, 1993. [9312220224]

1526. Memorandum for J. Taylor from E. Beckjord, "Resolution of Human Factors Generic Issue 5.2, 'Review Criteria for Human Factors Aspects of Advanced Controls and Instrumentation,'" June 29, 1993. [9312220225]

1527. NUREG/CR-5186, "Value/Impact Analysis of Generic Issue 94, 'Additional Low Temperature Overpressure Protection for Light Water Reactors,'" U.S. Nuclear Regulatory Commission, November 1988.

1528. NRC Information Notice No. 90-22, "Unanticipated Equipment Actuations Following Restoration of Power to Rosemount Transmitter Trip Units," U.S. Nuclear Regulatory Commission, March 23, 1990. [9003190349]

1529. NUREG-1422, "Summary of Chernobyl Followup Research Activities," U.S. Nuclear Regulatory Commission, June 1992.

1530. Memorandum for J. Taylor from E. Beckjord, "Resolution of Generic Issue 155.1, 'More Realistic Source Term Assumptions,'" March 13, 1995. [9511090074]

1531. NUREG-0940, "Enforcement Actions: Significant Actions Resolved," U.S. Nuclear Regulatory Commission, (Vol. 14, No. 2, Parts 1, 2, and 3) August 1995.

1532. Memorandum for C. Serpan from W. Minners, "Identification of New Generic Issue: Hydrogen Storage Facility Separation," December 16, 1993. [9312290134]

1533. Letter to the NRC from M. Tuckman (Duke Power Company), "Oconee Nuclear Station, Docket Nos. 50-269, 50-270, and 50-287, Generic Letter 88-20," November 30, 1990. [9012060005]

1534. EGG-SSRE-9747, "Improved Estimates of Separation Distances to Prevent Unacceptable Damage to Nuclear Power Plant Structures from Hydrogen Detonation for Gaseous Hydrogen Storage," Idaho National Engineering Laboratory, (Draft) November 1993. [9502070287]

1535. SCIE-EGG-103-89, "Draft Technical Evaluation Report on U.S. Commercial Power Reactor Hydrogen Tank Farms and Their Compliance With Separation Distance Safety Criteria," Scientech, Inc., March 1990. [9502070289]

1536. Memorandum for J. Taylor from E. Beckjord, "Resolution of GI-I.D.3, 'Safety System Status Monitoring,'" August 20, 1993. [9502070295]

1537. Memorandum for T. Murley from E. Beckjord, "Research Information Letter Number 171, 'Continuous On-Line Reactor Surveillance System,'" May 4, 1993. [9305100271]

1538. Memorandum for J. Taylor from E. Beckjord, "Closure of Generic Issue I.D.5(3), 'On-Line Automated Continuous Reactor Surveillance Systems,'" November 12, 1993. [9502070301]

1539. SECY-93-119, "TMI-2 Vessel Investigation Project," May 5, 1993. [9305100253]

1540. Memorandum for J. Taylor from E. Beckjord, "Closure of Generic Issue II.H.2, 'Obtain Data on Conditions Inside TMI-2 Containment,'" February 9, 1994. [9502070304]

1541. NUREG-1472, "Regulatory Analysis for the Resolution of Generic Issue 57: Effects of Fire Protection System Actuation on Safety-Related Equipment," U.S. Nuclear Regulatory Commission, October 1993.

1542. Memorandum for J. Taylor from E. Beckjord, "Resolution of Generic Safety Issue (GSI)-57, 'Effects of Fire Protection System Actuation on Safety-Related Equipment,'" September 30, 1993. [9502070315]

1543. NRC Information Notice 94-12, "Insights Gained from Resolving Generic Issue 57: Effects of Fire Protection System Actuation on Safety-Related Equipment," U.S. Nuclear Regulatory Commission, February 9, 1994. [9402030011]

1544. NUREG/CR-5759, "Risk Analysis of Highly Combustible Gas Storage, Supply, and Distribution Systems in Pressurized Water Reactor Plants," U.S. Nuclear Regulatory Commission, June 1993.

1545. NUREG-1364, "Regulatory Analysis for the Resolution of Generic Safety Issue 106: Piping and the Use of Highly Combustible Gases in Vital Areas," U.S. Nuclear Regulatory Commission, June 1993.

1546. Memorandum for J. Taylor from E. Beckjord, "Proposed Resolution of GSI-106, 'Piping and the Use of Highly Combustible Gases in Vital Areas,'" November 3, 1993. [9502070320]

1547. Letter to All Holders of Operating Licenses or Construction Permits for Nuclear Power Reactors, "Research Results on Generic Safety Issue 106, 'Piping and the Use of Highly Combustible Gases in Vital Areas,' (Generic Letter 93-06)," U.S. Nuclear Regulatory Commission, October 25, 1993. [9310200286]

1548. Memorandum for F. Gillespie from E. Beckjord, "Generic Letter for Implementation of Resolution of Generic Safety Issue 106, 'Piping and the Use of Highly Combustible Gases in Vital Areas,'" December 14, 1992. [9502070322]

1549. NUREG-1427, "Regulatory Analysis for the Resolution of Generic Issue 143: Availability of Chilled Water System and Room Cooling," U.S. Nuclear Regulatory Commission, December 1993.

1550. NUREG/CR-6084, "Value Impact Analysis of Generic Issue 143, 'Availability of Heating, Ventilation, Air Conditioning (HVAC) and Chilled Water Systems,'" U.S. Nuclear Regulatory Commission, November 1993.

1551. Memorandum for J. Taylor from E. Beckjord, "Resolution of Generic Issue 143 (GI-143), 'Availability of Chilled Water System and Room Cooling,'" September 30, 1993. [9502070325]

1552. NRC Information Notice No. 89-44, "Hydrogen Storage on the Roof of the Control Room," U.S. Nuclear Regulatory Commission, April 27, 1989. [8904260247]

1553. Memorandum for A. Gody from G. Holahan, "Prioritization of Proposed Generic Issue 162, 'Inadequate Technical Specifications for Shared Systems at Multi-plant Sites When One Unit Is Shut Down,'" March 20, 1993. [9304070074]

1554. Memorandum for J. Taylor from E. Beckjord, "Resolution of GI 67.5.1, 'Reassessment of SGTR Radiological Consequences,'" June 30, 1994. [9407130262]

1555. Memorandum for E. Beckjord from J. Murphy, "Staff Review Guidance for Generic Safety Issue (GSI) 147, 'Fire-Induced Alternate Shutdown/Control Room Panel Interactions,'" March 9, 1994. [9502070329]

1556. Memorandum for C. Rossi, et al., from T. Novak, "Safety and Safety/Relief Valve Reliability," April 24, 1992. [9205060277]

1557. NRC Information Notice No. 90-05, "Inter-System Discharge of Reactor Coolant," U.S. Nuclear Regulatory Commission, January 29, 1990. [9001230126]

1558. NRC Information Notice 92-64, "Nozzle Ring Settings on Low Pressure Water-Relief Valves," U.S. Nuclear Regulatory Commission, August 28, 1992. [9208240139]

1559. NRC Information Notice 92-61, "Loss of High Head Safety Injection," U.S. Nuclear Regulatory Commission, August 20, 1992 [9208180039], (Supplement 1) November 6, 1992 [9211020211].

1560. NUREG/CR-6001, "Aging Assessment of BWR Standby Liquid Control Systems," U.S. Nuclear Regulatory Commission, August 1992.

1561. NRC Information Notice No. 90-18, "Potential Problems With Crosby Safety Relief Valves Used on Diesel Generator Air Start Receiver Tanks," U.S. Nuclear Regulatory Commission, March 9, 1990. [9003050043]

1562. Memorandum for J. Taylor from E. Beckjord, "Resolution of Human Factors Generic Issue 4.4, 'Guidelines for Upgrading Other Procedures,'" July 29, 1993. [9502070331]

1563. NUREG/CR-5382, "Screening of Generic Safety Issues for License Renewal Considerations," U.S. Nuclear Regulatory Commission, December 1991.

1564. Memorandum for W. Russell from E. Beckjord, "License Renewal Implications of Generic Safety Issues (GSIs) Prioritized and/or Resolved Between October 1990 and March 1994," May 5, 1994. [9406170365]

1565. Memorandum for T. Murley from W. Russell and J. Partlow, "Closeout of TMI Action Plan Items III.A.1.2 and III.A.2.2 (Multi-Plant Actions F-63, F-64, F-65, and F-68)," October 2, 1990. [9010160111]

1566. SECY-80-275, "Final Rulemaking on Emergency Preparedness," June 3, 1980. [8007090015]

1567. NUREG/CP-0011, "Proceedings to Workshops Held on Proposed Rulemaking on Emergency Planning for Nuclear Power Plants," U.S. Nuclear Regulatory Commission, April 1980.

1568. Federal Register Notice 46 FR 11666, "10 CFR Parts 30, 40, 50, 70 and 72 Decommissioning Criteria for Nuclear Facilities; Notice of Availability of Draft Generic Environment Impact Statement," February 10, 1981.

1569. SECY-87-309, "Final Rule Amendments to 10 CFR Parts 30, 40, 50, 51, 70, and 72: General Requirements for Decommissioning Nuclear Facilities," December 17, 1987. [8801130361]

1570. SECY-88-94, "Final Rule Amendments to 10 CFR Parts 30, 40, 50, 51, 70, and 72: General Requirements for Decommissioning Nuclear Facilities (SECY-87-309)," April 5, 1988. [8804120065]

1571. SECY-94-179, "Notice of Proposed Rulemaking on Decommissioning of Nuclear Power Reactors," July 7, 1994. [9407180100]

1572. Memorandum for J. Taylor and K. Cyr from J. Hoyle, "SECY-94-179 - Notice of Propose Rulemaking on Decommissioning of Nuclear Power Reactors and COMKR-94-002 - Decommissioning of Nuclear Power Reactors and Comments on SECY-94-179," October 5, 1994. [9410270085]

1573. NRC Letter to All Pressurized Water Reactor Licensees, "Inadvertent Boron Dilution Events (Generic Letter 85-05)," January 31, 1985. [8502010366]

1574. Memorandum for J. Taylor from R. Bernero, "Resolution of Issue Numbert B-64, 'Decommissioning of Reactors,' of the Generic Issue Management Control System," September 26, 1994. [9410110028]

1575. Memorandum for C. Serpan and C. Ader from J. Greeves, "Reference to the U.S. Nuclear Regulatory Commission Dam Safety Program in NUREG-0933," August 12, 1994. [9409060217]

1576. "Approaches to Upgrading Procedures in Nuclear Power Plants," Pacific Northwest Laboratory, August 1994. [9507280167]

1577. NUREG/CR-6146, "Local Control Stations: Human Engineering Issues and Insights," U.S. Nuclear Regulatory Commission, September 1994.

1578. NUREG/CR-6105, "Human Factors Engineering Guidance for the Review of Advanced Alarm Systems," U.S. Nuclear Regulatory Commission, September 1994.

1579. Letter to L. Zech from F. Remick, "Resolution of Generic Issue 43, 'Air Systems Reliability,'" Januuary 19, 1989. [8901260092]

1580. Memorandum for J. Larkins from E. Beckjord, "Evaluation of Potential Safety Issues from the Multiple System Responses Program," June 3, 1994. [9406230143]

1581. Memorandum for T. Speis from A. Thadani, "Review of NUREG/CR-5420," April 30, 1995. [9505230058]

1582. NUREG/CR-5455, "Development of NRC's Human Performance Investigation Process (HPIP)," U.S. Nuclear Regulatory Commission, (Vol. 1) October 1993, (Vol. 2) October 1993, (Vol. 3) October 1993.

1583. NUREG-0711, "Human Factors Engineering Program Review Model," U.S. Nuclear Regulatory Commission, July 1994.

1584. NUREG/CR-5908, "Advanced Human-System Interface Design Review Guideline," U.S. Nuclear Regulatory Commission, (Vol. 1) July 1994, (Vol. 2) July 1994.

1585. Memorandum for L. Shao from B. Sheron, "Proposed Generic Issue on Safety Systems' Response to the Sequential Occurrence of LOCA and Loss of Offsite Power Events," February 17, 1995. [9502270179]

1586. NRC Information Notice 93-17, "Safety Systems Response to Loss of Coolant and Loss of Offsite Power," March 8, 1993 [9303020536], (Rev. 1) March 25, 1994 [9403220236].

1587. NUREG-1335, "Individual Plant Examination: Submittal Guidance," U.S. Nuclear Regulatory Commission, August 1989.

1588. NUREG/CR-5580, "Evaluation of Generic Issue 57: Effects of Fire Protection System Actuation on Safety-Related Equipment," (Vol. 1) December 1992, (Vol. 2) December 1992, (Vol. 3) December 1992, (Vol. 4) December 1992, (Vol. 5) December 1992.

1589. NUREG/CR-5720, "Motor-Operated Valve Research Update," U.S. Nuclear Regulatory Commission, June 1992.

1590. EGG-REQ-7297, "Summary of Valve Assemblies in High Energy BWR Systems Outside of Containment -- Interim Report," EG&G Idaho, Inc., June 1986. [9511090106]

1591. Regulatory Guide 1.22, "Periodic Testing of Protection System Actuation Functions," U.S. Nuclear Regulatory Commission, February 1972. [7907100108]

1592. Regulatory Guide 1.118, "Periodic Testing of Electric Power and Protection Systems," U.S. Nuclear Regulatory Commission, June 1976, (Rev. 1) November 1977, (Rev. 2) June 1978 [7907110110], (Rev. 3) April 1995 [9505030214].

1593. NUREG-1453, "Regulatory Analysis for the Resolution of Generic Issue 142: Leakage Through Electrical Isolators in Instrumentation Circuits," U.S. Nuclear Regulatory Commission, September 1993.

1594. Regulatory Guide 1.77, "Assumptions Used for Evaluating a Control Rod Ejection Accident for Pressurized Water Reactors," U.S. Nuclear Regulatory Commission, May 1974. [7907100299]

1595. Memorandum for E. Beckjord from T. Murley, "User Need for Assistance on High Burnup Fuels," October 4, 1993. [9310270186]

1596. Memorandum for W. Russell from E. Beckjord, "Fuel Damage Criteria for Reactivity Transients," April 29, 1994. [9511090065]

1597. NRC Information Notice 94-64, "Reactivity Insertion Transient and Accident Limits for High Burnup Fuel," August 31, 1994 [9408250234], (Supplement 1) April 6, 1995 [9503310049].

1598. Memorandum to the Chairman, et al., from J. Taylor, "Reactivity Transients and High-Burnup Fuel," September 13, 1994. [9409300142]

1599. Memorandum to the Chairman, et al., from J. Taylor, "Reactivity Transients and Fuel Damage Criteria for High Burnup Fuel," November 9, 1994. [9511090217]

1600. NUREG/CP-0139, "Transactions of the Twenty-Second Water Reactor Safety Information Meeting," U.S. Nuclear Regulatory Commission, October 1994.

1601. Memorandum to C. Serpan from A. Chaffee, "Nuclear Reactor Regulation (NRR) Input Into Research NUREG-0933 (WITS Item 9400213)," February 13, 1996. [9602260124]

1602. NUREG-1352, "Action Plans for Motor-Operated Valves and Check Valves," U.S. Nuclear Regulatory Commission, June 1990.

1603. Memorandum to A. Thadani from J. Strosnider, "Plan for Addressing Generic Reactor Pressure Vessel Issues," August 9, 1995. [9508150078]

1604. NUREG-1511, "Reactor Pressure Vessel Status Report," U.S. Nuclear Regulatory Commission, December 1994.

1605. Memorandum to A. Thadani from J. Strosnider, "Assessment of Impact of Increased Variability in Chemistry on the RT_{PTS} Value of PWR Reactor Vessels," May 5, 1995 [9505100187]

1606. SECY-91-161, "Schedules for the Advanced Reactor Reviews and Regulatory Guidance Revisions," May 31, 1991. [9106050174]

1607. Memorandum for W. Russell from F. Gillespie, "Action Plan for the Development of Draft SRP Revisions in the SRP-UDP," May 17, 1994. [9406280148, 9405270273]

1608. Memorandum to J. Taylor from C. Paperiello and W. Russell, "Dry Cask Storage Action Plan," July 28, 1995. [9508250186]

1609. Memorandum to J. Taylor from W. Russell and R. Bernero, "Realignment of Reactor Decommissioning Program," March 15, 1995. [9508250180]

1610. NUREG-1474, "Effect of Hurricane Andrew on the Turkey Point Nuclear Generating Station from August 20 - 30, 1992," U.S. Nuclear Regulatory Commission and the Institute of Nuclear Power Operations, March 1993. [9307060041]

1611. Memorandum for J. Taylor from T. Murley, "Office of Nuclear Reactor Regulation (NRR) Plan for Generic Follow-on Actions - 'Report on the Effect of Hurricane Andrew on the Turkey Point Nuclear Generating Station from August 20 - 30, 1992,'" July 22, 1993. [9308160297]

1612. NRC Information Notice 93-53, "Effect of Hurricane Andrew on Turkey Point Nuclear Generating Station and Lessons Learned," July 20, 1993 [9307140056], (Supplement 1) April 29, 1994 [9404280023].

1613. NUREG/CR-6224, "Parametric Study of the Potential for BWR ECCS Strainer Blockage Due to LOCA Generated Debris," U.S. Nuclear Regulatory Commission, October 1995.

1614. NRC Information Notice 92-71, "Partial Plugging of Suppression Pool Strainers at a Foreign BWR," September 30, 1992. [9209290014]

1615. NRC Bulletin No. 93-02, "Debris Plugging of Emergency Core Cooling Suction Strainers," May 11, 1993. [9305110015]

1616. NRC Information Notice 93-34, "Potential for Loss of Emergency Cooling Function Due to a Combination of Operational and Post-LOCA Debris in Containment," April 26, 1993 [9304260085], (Supplement 1) May 6, 1993 [9305050002].

1617. NRC Bulletin 95-02, "Unexpected Clogging of a Residual Heat Removal (RHR) Pump Strainer While Operating in Suppression Pool Cooling Mode," October 17, 1995. [9510040059]

1618. NRC Information Notice No. 88-28, "Potential for Loss of Post-LOCA Recirculation Capability Due to Insulation Debris Blockage," May 19, 1988. [8805130108]

1619. NRC Information Notice 92-85, "Potential Failures of Emergency Core Cooling Systems Caused by Foreign Material Blockage," December 23, 1992. [9212170209]

1620. NRC Information Notice 94-57, "Debris in Containment and the Residual Heat Removal System," August 12, 1994. [9408080111]

1621. NRC Information Notice 95-06, "Potential Blockage of Safety-Related Strainers by Material Brought Inside Containment," January 25, 1995. [9501190091]

1622. NRC Information Notice 95-47, "Unexpected Opening of a Safety/Relief Valve and Complications Involving Suppression Pool Cooling Strainer Blockage," October 4, 1995 [9510030107], (Rev. 1) November 30, 1995 [9511270084].

1623. Memorandum to A. Thadani from G. Holahan, "Task Action Plan for Spent Fuel Storage Pool Safety," October 13, 1994. [9410190155]

1624. NRC Information Notice 94-38, "Results of a Special NRC Inspection at Dresden Nuclear Power Station Unit 1 Following a Rupture of Service Water Inside Containment," May 27, 1994. [9405240025]

1625. NRC Bulletin 94-01, "Potential Fuel Pool Draindown Caused by Inadequate Maintenance Practices at Dresden Unit 1," April 14, 1994. [9404120041]

1626. Memorandum for A. Thadani from G. Holahan, "Revision to Report on the Re-Assessment of the NRC Fire Protection Program," February 27, 1993. [9504190319]

1627. SECY-93-143, "NRC Staff Actions to Address the Recommendations in the Report on the Reassessment of the NRC Fire Protection Program," May 21, 1993. [9306030231]

1628. SECY-95-034, "Status of Recommendations Resulting from the Reassessment of the NRC Fire Protection Program," February 13, 1995. [9503060019]

1629. Memorandum for Chairman Jackson, et al., from J. Taylor, "Semiannual Report on the Status of the Thermo-Lag Action Plan and Fire Protection Task Action Plan," September 20, 1995. [9509250375]

1630. SECY-94-219, "Proposed Agency-Wide Implementation Plan for Probabilistic Risk Assessment (PRA)," August 19, 1994. [9409090234]

1631. SECY-95-079, "Status Update of the Agency-Wide Implementation Plan for Probabilistic Risk Assessment," March 30, 1995. [9504100180]

1632. SECY-95-126, "Final Policy Statement on the Use of Probabilistic Risk Assessment Methods in Nuclear Regulatory Activities," May 18, 1995. [9506020152]

1633. SECY-95-280, "Framework for Applying Probabilistic Risk Analysis in Reactor Regulation," November 27, 1995. [9512180168, 9512040133]

1634. Memorandum to Chairman Jackson from J. Taylor, "Improvements Associated With Managing the Utilization of Probabilistic Risk Assessment (PRA) and Digital Instrumentation and Control Technology," January 3, 1996. [9601180203]

1635. Memorandum for J. Taylor from T. Murley, et al., "Agency Directions for Current and Future Uses of Probabilistic Risk Assessment (PRA)," November 2, 1993. [9311100145]

1636. Memorandum to A. Thadani from G. Holahan and R. Spessard, "Action Plan to Monitor, Review, and Improve Fuel and Core Components Operating Performance," October 7, 1994. [9411040040]

1637. NRC Letter to All Operating Reactor Licensees, "Licensee Qualification for Performing Safety Analyses in Support of Licensing Actions (Generic Letter No. 83-11)," February 4, 1983. [8302080304]

1638. NRC Letter to All Power Reactor Licensees and Applicants, "Removal of Cycle-Specific Parameter Limits from Technical Specifications (Generic Letter 88-16)," October 4, 1988. [8810050058, 8810140007]

1639. NRC Information Notice No. 91-47, "Failure of Thermo-Lag Fire Barrier Material to Pass Fire Endurance Test," August 6, 1991. [9108020180]

1640. NRC Information Notice 91-79, "Deficiencies in the Procedures for Installing Thermo-Lag Fire Barrier Materials," December 6, 1991 [9112020091], (Supplement 1) August 4, 1994 [9408030006].

1641. NRC Information Notice 92-55, "Current Fire Endurance Test Results for Thermo-Lag Fire Barrier Material," July 27, 1992. [9207270345]

1642. NRC Information Notice 92-82, "Results of Thermo-Lag 330-1 Combustibility Testing," December 15, 1992. [9212090211]

1643. NRC Information Notice 94-22, "Fire Endurance and Ampacity Derating Test Results for 3-Hour Fire-Rated Thermo-Lag 330-1 Fire Barriers," March 16, 1994. [9403150511]

1644. NRC Information Notice 94-34, "Thermo-Lag 330-660 Flexi-Blanket Ampacity Derating Concerns," May 13, 1994. [9405090108]

1645. NRC Information Notice 94-86, "Legal Actions Against Thermal Science, Inc., Manufacturer of Thermo-Lag," December 22, 1994. [9412160132]

1646. NRC Information Notice 95-27, "NRC Review of Nuclear Energy Institute, 'Thermo-Lag 330-1 Combustibility Evaluation Methodology Plant Screening Guide,'" May 31, 1995. [9505240424]

1647. NRC Information Notice 95-32, "Thermo-Lag 330-1 Flame Spread Test Results," August 10, 1995. [9508040074]

1648. NRC Information Notice 95-49, "Seismic Adequacy of Thermo-Lag Panels," October 27, 1995. [9510240388]

1649. NRC Information Notice 95-03, "Loss of Reactor Coolant Inventory and Potential Loss of Emergency Mitigation Functions While in a Shutdown Condition," January 18, 1995 [9501110412], (Supplement 1) March 25, 1996 [9602050208].

1650. NRC Letter to All Power Reactor Licensees and Applicants for Power Reactor Licenses, "Policy Statement on Engineering Expertise on Shift (Generic Letter 86-04)," February 13, 1986. [8602240459]

1651. NRC Information Notice 91-77, "Shift Staffing at Nuclear Power Plants," November 26, 1991. [9111200123]

1652. NRC Information Notice 93-44, "Operational Challenges During a Dual-Unit Transient," June 15, 1993. [9306080170]

1653. NRC Information Notice 93-81, "Implementation of Engineering Expertise on Shift," October 12, 1993. [9310060239]

1654. NRC Information Notice 95-48, "Results of Shift Staffing Study," October 10, 1995. [9510040181]

1655. Letter to B. Boger (NRC) from R. Whitesel (NUMARC), December 29, 1992. [9301080124]

1656. SECY-93-184, "Shift Staffing at Nuclear Power Plants," June 29, 1993. [9307080273]

1657. SECY-93-193, "Policy on Shift Technical Advisor Position at Nuclear Power Plants," July 13, 1993. [9307200065]

1658. NRC Bulletin No. 90-01, "Loss of Fill-Oil in Transmitters Manufactured by Rosemount," March 9, 1990 [9003050148], (Supplement 1) December 22, 1992 [9212170002].

1659. Memorandum for R. Zimmerman, et al., from J. Sniezek, "Review of Rosemount Transmitter Issues," May 21, 1993. [9308090287, 9310010241]

1660. SECY-95-078, "Staff Actions to Address Recommendations Resulting from Recent Evaluations of the Notice of Enforcement Discretion (NOED) Policy and Process," March 29, 1995. [9504100173]

1661. NUREG-1600, "General Statement of Policy and Procedures for NRC Enforcement Actions," U.S. Nuclear Regulatory Commission, July 1995.

1662. Memorandum for E. Jordan, et al., from J. Taylor, "Unauthorized Forced Entry Into the Protected Area at Three Mile Island Unit 1 on February 7, 1993 (NUREG-1485)," June 18, 1993. [9308110317]

1663. NRC Letter to All Holders of Operating Licenses or Construction or Construction Permits for Nuclear Power Reactors, Except for Big Rock Point and Facilities Permanently or Indefinitely Shut Down, "Emergency Response Data System Test Program (Generic Letter 93-01)," March 3, 1993. [9302240242]

1664. NRC Information Notice 93-94, "Unauthorized Forced Entry Into the Protected Area at Three Mile Island Unit 1 on February 7, 1993," December 9, 1993. [9312030104]

1665. NUREG-1485, "Unauthorized Forced Entry Into the Protected Area at Three Mile Island Unit 1 on February 7, 1993," U.S. Nuclear Regulatory Commission, April 1993.

1666. NUREG/CR-6432, "Estimated Net Value and Uncertainty for Automating ECCS Switchover at PWRs," U.S. Nuclear Regulatory Commission, February 1996.

1667. Memorandum for J. Taylor from D. Morrison, "Technical Resolution of Generic Issue 24 (GI-24), 'Automatic ECCS Switch to Recirculation,'" October 31, 1995. [9511140037]

1668. NUREG/CR-5904, "Functional Issues and Environmental Qualification of Digital Protection Systems of Advanced Light-Water Nuclear Reactors," U.S. Nuclear Regulatory Commission, April 1994.

1669. NUREG/CR-5941, "Technical Basis for Evaluating Electromagnetic and Radio-Frequency Interference in Safety-Related I&C Systems," U.S. Nuclear Regulatory Commission, April 1994.

1670. NRC Generic Letter 94-03, "Intergrannular Stress Corrosion Cracking of Core Shrouds in Boiling Water Reactors," July 25, 1994. [9407210200]

1671. Memorandum for A. Thadani from B. Sheron, "Staff Action Plan for the Resolution of Issues Associated With Boiling Water Reactor Internals Cracking," April 26, 1995. [9505220070]

1672. NRC Letter to All Holders of Operating Licenses or Construction Permits for Nuclear Power Plants (Except Yankee Atomic Electric Company, Licensee for the Yankee Nuclear Power Station), "Reactor Vessel Structural Integrity, 10 CFR 50.54(f) (Generic Letter 92-01)," February 28, 1992, (Rev. 1) March 6, 1992 [9203060147], (Rev. 1, Supplement 1) May 19, 1995 [9505090312].

1673. Memorandum for E. Beckjord from W. Russell, "NRR User Need Request for Support of Resolving Problem of Stress Corrosion Cracking of Reactor Vessel Internal Components," December 2, 1994. [9505090299]

1674. Memorandum for D. Morrison from W. Russell, "Request for Research on Reactor Pressure Vessel Integrity," August 11, 1995. [9508220323]

1675. Memorandum to L. Shao from M. Mayfield, "Summary, NRC/NEI Workshop on Nuclear RPV Integrity," September 6, 1995. [9509200141]

1676. NRC Administrative Letter 95-03, "Availability of Reactor Vessel Integrity Database," August 4, 1995. [9508010148]

1677. AEOD/S95-01, "Reactor Coolant System Blowdown at Wolf Creek on September 17, 1994," Office for Analysis and Evaluation of Operational Data, U.S. Nuclear Regulatory Commission, March 1995. [9503310036]

1678. Memorandum to A. Thadani from R. Jones, "Proposed Action Plan for the 'Wolf Creek Draindown Event,'" September 8, 1995. [9509140225]

1679. Memorandum for the Chairman from J. Taylor, "Commercial Contract for Technical Assistance to Support the Standard Review Plan Update and Development Program," November 18, 1991.

1680. Memorandum for J. Taylor from I. Selin, "Commercial Contract for Technical Assistance to Support the Standard Review Plan Update and Development Program," December 13, 1991.

1681. Memorandum for J. Taylor from T. Murley, "Planned Actions to Address the Issues from the Office of Inspector General's Report on the NRC Staff's Review and Acceptance of Thermo-Lag 330-1 Fire Barrier Material," August 21, 1992. [9209250288]

1682. NRC Bulletin No. 92-01, "Failure of Thermo-Lag 330 Fire Barrier System to Maintain Cabling in Wide Cable Trays and Small Conduits Free from Fire Damage," June 24, 1992. [9206240122]

1683. Memorandum for W. Russell from T. Murley, "Final Report - Special Review Team for the Review of Thermo-Lag Fire Barrier Performance," April 21, 1992. [9205120277]

1684. Mmemorandum for E. Beckjord from T. Murley, "Request for Prioritization of Potential Generic Safety Issue - BWR MSIV Common Mode Failure Due to Loss of Accumulator Pressure," May 25, 1993. [9308160285]

1685. Memorandum for T. Murley from E. Beckjord, "Request for Prioritization of Potential Generic Safety Issue - BWR MSIV Common Mode Failure Due to Loss of Accumulator Pressure," June 29, 1993. [9509050193]

1686. SEA No. 95-3101-01-A:1, "Technical Information for Prioritization of Generic Safety Issues," Science and Engineering Associates, Inc., June 1996. [9704090123]

1687. SEA No. 97-3701-010-A:1, "Issue 107, Main Transformer Failures," Science and Engineering Associates, Inc., March 28, 1997. [9704090149]

1688. NUREG/CR-5595, "FORECAST: Regulatory Effects Cost Analysis Software Manual," (Rev. 1) July 1996.

1689. Memorandum to J. Taylor from J. Hoyle, "COMSECY-95-033 - Proposed Dollar per Person-Rem Conversion Factor; Response to SRM Concerning Issuance of Regulatory Analysis Guidelines of the U.S. Nuclear Regulatory Commission and SRM Concerning the Need for a Backfit Rule for Materials Licensees (RES-950225) (WITS-9100294)," September 18, 1995. [9803260148]

1690. Memorandum for All RES Employees from D. Morrison, "RES Office Letter No. 3C -- Procedures for Obtaining Regulatory Impact Analysis Review and Support," February 23, 1996. [9803260238]

1691. Memorandum to D. Morrison from W. Russell, "Third Supplemental User Need Request Regarding Potential for Loss of Emergency Core Cooling in a Boiling Water Reactor due to Clogging of the Suction Strainers by Loss-of-Coolant Accident Generated Debris," December 7, 1995. [9512140237]

1692. Memorandum to L. Shao from M. Marshall, "Expansion of Work Being Performed Under GSI-191, 'Assessment of Debris Accumulation on Pressurized Water Reactors Sump Performance,'" May 14, 1997. [9706060061]

1693. Memorandum to Chairman Jackson, et al., from J. Taylor, "Report on Survey of Refueling Practices," May 21, 1996. [9606030213]

1694. Memorandum to Chairman Jackson, et al., from J. Taylor, "Resolution of Spent Fuel Storage Pool Action Plan Issues," July 26, 1996. [9611180017]

1695. SECY-97-168, "Issuance for Public Comment of Proposed Rulemaking Package for Shutdown and Fuel Storage Pool Operation," July 30, 1997. [9708150168]

1696. Memorandum to L. Callan from J. Hoyle, "Staff Requirements - SECY-97-168 - Issuance for Public Comment of Proposed Rulemaking Package for Shutdown and Fuel Storage Pool Operation," December 11, 1997. [9712180222]

1697. Regulatory Guide 1.13, "Spent Fuel Storage Facility Design Basis," U.S. Nuclear Regulatory Commission, (Rev. 1) December 1975 [7907100079], (Draft Rev. 2) December 1981 [9803260142].

1698. Memorandum to E. Beckjord from E. Jordan, "Periodic Review of Low Priority Generic Safety Issues," April 7, 1995. [9701230176]

1699. Memorandum to D. Morrison from W. Russell, "Periodic Review of Low-Priority Generic Issues," April 11, 1996. [9604240169]

1700. Memorandum to L. Shao from D. Cool, "Submittal of Generic Safety Issues," April 12, 1996. [9605170029]

1701. Memoranadum to F. Coffman from J. Piccone, "Status of NMSS Generic Safety Issues," December 15, 1997. [9712180068]

1702. NRC Information Notice 96-21, "Safety Concerns Related to the Design of the Door Interlock Circuit on Nucletron High-Dose Rate and Pulsed Dose Rate Remote Afterloading Brachytherapy Devices," April 10, 1996. [9604040106]

1703. NRC Information Notice 96-51, "Residual Contamination Remaining in Krypton-85 Handling System After Venting," September 11,1996. [9609050281]

1704. NRC Information Notice 96-54, "Vulnerability of Stainless Steel to Corrosion When Sensitized," October 17, 1996. [9610100212]

1705. Memorandum to L. Shao from D. Cool, "Submittal of Generic Safety Issue," June 18, 1997. [9706240185]

1706. NRC Bulletin 97-01, "Potential for Erroneous Calibration, Dose Rate, or Radiation Exposure Measurements With Certain Victoreen Model 530 and 530SI Electrometer/ Dosemeters," April 30, 1997. [9704300128]

1707. Memorandum to R. Bangart, et al., from D. Cool, "Closeout Report for Bulletin 97-01, Potential for Erroneous Measurements With Certain Victoreen Electrometers," September 8, 1997. [9709170137]

1708. Memorandum to L. Shao from D. Cool, "Submittal of Generic Safety Issue," August 5, 1997. [9708130432]

1709. Memorandum to J. Craig from F. Combs, "Submittal of New Generic Issues for Tracking in the Generic Issues Management and Control System (GIMCS)," June 4, 1998. [9806090180]

1710. NRC Information Notice 96-70, "Year 2000 Effect on Computer System Software," December 24, 1996. [9612200319]

1711. NRC Information Notice 97-61, "U.S. Department of Health and Human Services Letter to Medical Device Manufacturers on the Year 2000 Problem," August 6, 1997. [9707310130]

1712. NRC Information Notice 97-91, "Recent Failures of Control Cables Used on Amersham Model 660 Posilock Radiography Systems," December 31, 1997 [9712310254], (Supplement 1) August 10, 1998 [9808050063].

1713. NRC Information Notice 96-52, "Cracked Insertion Rods on Troxler Model 3400 Series Portable Moisture Density Gauges," September 26, 1996. [9609200181]

1714. NRC Bulletin 97-02, "Puncture Testing of Shipping Packages Under 10 CFR Part 71," September 23, 1997. [9709180179]

1715. Memorandum to D. Morrison from T. Gwynn, "Periodic Review of Low-Priority Generic Safety Issues," April 16, 1997. [9909290132]

1716. Memorandum to T. Gwynn from T. Martin, "Periodic Review of Low-Priority Generic Safety Issues," July 13, 1998. [9909290134]

1717. UCRL-52156, "Advisability of Seismic Scram," Lawrence Livermore Laboratory, June 30, 1976. [8103270386]

1718. SECY-98-166, "Summary of Activities Related to Generic Safety Issues," July 6, 1998. [9807220129, 9807170226]

1719. NUREG-1631, "Source Disconnects Resulting from Radiography Drive Cable Failures," U.S. Nuclear Regulatory Commission, June 1998.

1720. Memorandum to J. Craig from F. Combs, "Closure of NMSS Generic Issues," October 13, 1998. [9810160185]

1721. NUREG-1536, "Standard Review Plan for Dry Cask Storage Systems," U.S. Nuclear Regulatory Commission, January 1997.

1722. Letter to E. Fuller (Sierra Nuclear Corporation) from M. Knapp (NRC), "Closure of Confirmatory Action Letter 97-7-001," July 22, 1998. [9807290363]

1723. Memorandum to J. Craig from F. Combs, "Submittal of New Generic Issues for Tracking in the Generic Issues Management and Control System (GIMCS)," July 23, 1998. [9807280039]

1724. SECY-98-001, "Staff Requirements Memorandum 951219A - Briefing on Mechanisms for Addressing Generic Safety Issues," January 2, 1998. [9801230188, 9801140109]

1725. Memorandum to E. Ten Eyck, et al., from C. Paperiello, "NMSS Policy and Procedures Letter 1-57, Rev. 1, 'NMSS Generic Issues Program,'" October 30, 1997. [9711050048]

1726. NUREG/CR-6538, "Evaluation of LOCA With Delayed Loop and Loop With Delayed LOCA Accident Scenarios," U.S.Nuclear Regulatory Commission, July 1997.

1727. Memorandum to W. Travers from A. Thadani, "Resolution of Generic Safety Issue (GSI) - 171, 'ESF Failure from LOOP Subsequent to LOCA,'" December 9, 1998. [9909290137]

1728. Letter to J. Birmingham, et al., (NRC) from W. Foster (The B&W Owners' Group), "Submittal of B&WOG Report 'Evaluation of Potential Boron Dilution following Small Break Loss of Coolant Accident,' 77-5002260-00, September 1998," September 11, 1998. [9809150094]

1729. Letter to W. Lyon (NRC) from J. Link (The B&W Owners' Group), "Transmittal of Report 'Status Report on Return to Criticality Following Small Break Loss of Coolant Accident,' June 1998, Document No. 47-5001848-00," June 15, 1998. [9806220211]

1730. Memorandum to A. Thadani from S. Collins, "Potential Need to Reprioritize/Reopen Aspects of Generic Safety Issue (GSI) 22 Pertaining to Boron Dilution Following Loss-of-Coolant Accidents," February 1, 1999. [9902160085]

1731. Memorandum for W. Russell from D. Morrison, "Prioritization of the NRR Action Plans Submitted to RES on February 13, 1996," June 24, 1996. [9606260260]

1732. Memorandum for W. Minners from E. Beckjord, "Generic Issue No. 165, 'Spring-Actuated Safety and Relief Valve Reliability,'" November 26, 1993. [9312090116]

1733. Memorandum to W. Travers from A. Thadani, "Closeout of Generic Safety Issue 165, Spring-Actuated Safety and Relief Valve Reliability," June 18, 1999.

1734. Memorandum for W. Travers from A. Thadani, "Resolution of Generic Safety Issue B-61, 'Analytically Derived Allowable Equipment Outage Periods,'" March 2, 1999. [9904050209]

1735. Regulatory Guide 1.177, "An Approach for Plant-Specific, Risk-Informed Decisionmaking: Technical Specifications," U.S. Nuclear Regulatory Commission, August 1998. [9809110028]

1736. Memorandum to M. Knapp from L. Shao, "Generic Issue No. 169, 'BWR MSIV Common Mode Failure Due to Loss of Accumulator Pressure,'" March 10, 1998. [9804070430]

1737. Memorandum to NRR Division Directors from D. Matthews, "Director's Quarterly Status Report," January 26, 1999. [9902040247]

1738. Memorandum to L. Shao from D. Morrison, "Generic Issue No. 171, 'ESF Failure from LOOP Subsequent to LOCA,'" June 16, 1995. [9507030081]

1739. Memorandum for J. Murphy from E. Beckjord, "Generic Issue No. 158, 'Performance of Safety-Related Power-Operated Valves Under Design Basis Conditions,'" January 26, 1994. [9402040031]

1740. Memorandum to J. Murphy from E. Beckjord, "Generic Issue No. 167, 'Hydrogen Storage Facility Separation,'" September 29, 1994. [9410250044]

1741. NUREG/CP-0123, "Proceedings of the Second NRC/ASME Symposium on Pump and Valve Testing," U.S. Nuclear Regulatory Commission, July 1992.

1742. AEOD/C603, "A Review of Motor-Operated Valve Performance," Office for Analysis and Evaluation of Operational Data, U.S. Nuclear Regulatory Commission, December 1986. [8612150167]

1743. Memorandum for Chairman Zech, et al., from V. Stello, "Case Study Report - A Review of Motor-Operated Valve Performance (AEOD/C603)," December 10, 1986.

1744. Memorandum to W. Travers from A. Thadani, "Closeout of Generic Safety Issue (GSI) - 158, 'Performance of Safety-Related Power-Operated Valves Under Design Basis Conditions,'" August 2, 1999. [9910040224]

1745. Memorandum for W. Minners from E. Beckjord, "Generic Issue No. 148, 'Smoke Control and Manual Fire-Fighting Effectiveness,'" August 26, 1992. [9208310325]

1746. Memorandum to A. Thadani from T. King, "Staff Review Guidance for Generic Safety Issue (GSI) 148, 'Smoke Control and Manual Fire-Fighting Effectiveness,'" July 22, 1999. [9907270312]

1747. Memorandum to G. Holahan from J. Wermeil, "Closeout of Core Performance Action Plan (TAC Nos. M91256, M91602)," February 16, 1999. [9902190260]

1748. Memorandum to Chairman Jackson, et al., from L. Callan, "Agency Program Plan for High-Burnup Fuel," July 6, 1998. [9808060096]

1749. Memorandum to D. Morrison from W. Russell, "Periodic Review of Low-Priority Generic Issues," April 11, 1996. [9604240169]

1750. Memorandum to B. Sheron from J. Craig, "Periodic Review of Low-Priority Generic Safety Issues," March 5, 1999. [9904060275]

1751. Letter to Seismic Qualification Advisory Committee (SQAC) and Meeting Attendees from G. Sliter and R. Vasudevan (EPRI), "Summary of the EPRI Seismic Equipment Qualification Research Coordination Meeting at ANCO Engineers, Inc., Los Angeles, California, September 19 & 20, 1984," October 10, 1984.

1752. NUREG/CR-5500, "Reliability Study: Westinghouse Reactor Protection System, 1984-1995," U.S. Nuclear Regulatory Commission, (Vol. 2) April 1999.

1753. Memorandum to D. Matthews from E. Rossi, "Issue of Final Report - System Reliability: Westinghouse Reactor Protection System, 1984-1995 (NUREG/CR-5500, Volume 2)," March 24, 1999. [9904060063]

1754. Memorandum for W. Minners from E. Beckjord, "Generic Issue No. 145, 'Actions to Reduce Common Cause Failures,'" February 11, 1992. [9203170332]

1755. NUREG/CR-6268, "Common-Cause Failure Database and Analysis System," U.S. Nuclear Regulatory Commission, (Vols. 1, 2, 3, and 4) June 1998.

1756. NRC Administrative Letter 98-04, "Availability of Common-Cause Failure Database," July 30, 1998. [9807240296]

1757. NRC Regulatory Issue Summary 99-03, "Resolution of Generic Issue 145, Actions to Reduce Common-Cause Failures," October 13, 1999. [9910060044]

1758. Memorandum to W. Travers from A. Thadani, "Resolution of Generic Safety Issue 145, 'Actions to Reduce Common Cause Failures,'" October 18, 1999.

1759. NUREG/CR-5640, "Overview and Comparison of U.S. Commercial Nuclear Power Plants," U.S. Nuclear Regulatory Commission, September 1990.

1760. NUREG/CR-5750, "Rates of Initiating Events at U.S. Nuclear Power Plants: 1987-1995," U.S. Nuclear Regulatory Commission, February 1999.

1761. Memorandum to A. Thadani from E. Beckjord, "Generic Issue 156-6.1, 'Pipe Break Effects on Systems and Components,'" October 31, 1994. [9412070254]

1762. Memorandum for J. Murphy from E. Beckjord, "Generic Issue No. 156.6.1, 'Pipe Break Effects on Systems and Components,'" April 29, 1994. [9406200193]

1763. Memorandum to W. Travers from A. Thadani, "Closeout of Generic Safety Issue 23, 'Reactor Coolant Pump Seal Failure,'" November 8, 1999. [ML993370509]

1764. Memorandum to W. Travers from A. Thadani, "Closeout of Generic Safety Issue 190, 'Fatigue Evaluation of Metal Components for 60-Year Plant Life,'" December 26, 1999.

1765. Memorandum to W. Travers from S. Collins, "Closeout of Generic Safety Issue B-55, 'Improved Reliability of Target Rock Safety Relief Valves,'" December 17, 1999.

1766. Memorandum to W. Travers from A. Thadani, "Proposed Resolution of Generic Issue B-17, 'Criteria for Safety-Related Operator Actions,'" March 27, 2000. [ML003695959]

1767. NRC Regulatory Issue Summary 2000-02, "Closure of Generic Safety Issue 23, Reactor Coolant Pump Seal Failure," February 15, 2000. [ML003680402]

1768. NRC Regulatory Issue Summary 2000-03, "Resolution of Generic Safety Issue 158: Performance of Safety-Related Power-Operated Valves Under Design Basis Conditions," March 15, 2000. [ML003686003]

1769. NRC Regulatory Issue Summary 2000-05, "Resolution of Generic Safety Issue 165, Spring-Actuated Safety and Relief Valve Reliability," March 16, 2000. [ML003689694]

1770. Memorandum for W. Russell from C. Miller, "Licensee Offsite Communication Capabilities; Results of Information Gathering Using Temporary Instruction," September 26, 1996.

1771. Memorandum to C. Rossi from D. Cool, "Status of NMSS Issues in the Generic Issue Management and Control System," June 25, 1999. [9907010194]

1772. Memorandum to C. Rossi from D. Cool, "Closure of NMSS Generic Issue," May 18, 1999.

1773. Memorandum for E. Beckjord from J. Milhoan, "Periodic Review of Low-Priority Generic Safety Issues," June 4, 1993.

1774. Memorandum to A. Thadani from S. Bahadur, "Reprioritization of GSI-71, 'Failure of Resin Demineralizer Systems and Their Effects on Nuclear Power Plant Safety,'" December 20, 2000. [ML003779066]

1775. Memorandum to A. Thadani from M. Mayfield, "Closeout of GSI-152, 'Design Basis for Valves That Might Be Subjected to Significant Blowdown Loads,'" April 4, 2001. [ML010740024]

1776. Memorandum to A. Thadani from J. Rosenthal, "Initial Screening of Candidate Generic Issue 187, 'The Potential Impact of Postulated Cesium Concentration on Equipment Qualification in the Containment Sump,'" April 30, 2001. [ML011210348]

1777. Memorandum to A. Thadani from B. Sheron, "Proposed Generic Safety Issue - The Potential Impact of Postulated Cesium Concentration on Equipment Qualification in the Containment Sump," December 16, 1999. [ML993610109]

1778. Memorandum to W. Travers from A. Thadani, "Closure of Generic Issue 170, Reactivity Transients and Fuel Damage Criteria for High Burnup Fuel," May 4, 2001. [ML011280414]

1779. NUREG/CR-6395, "Enhanced Prioritization of Generic Safety Issue 156-6.1 Pipe Break Effects on Systems and Components Inside Containment," (Draft) September 1999. [ML010460480]

1780. Memorandum to F. Eltawila from D. Cool, "Submittal of Generic Issues for Tracking in the Generic Issue Management Control System (GIMCS)," November 14, 2000. [ML003763127]

1781. NRC Information Notice 99-26, "Safety and Economic Consequences of Misleading Marketing Information," August 24, 1999. [9908180183]

1782. NRC Information Notice 99-09, "Problems Encountered When Manually Editing Treatment Data on the Nucletron MicroSelectron-HDR (New) Model 105.999," March 24, 1999. [9903190227]

1783. NRC Information Notice 99-23, "Safety Concerns Related to Repeated Control Unit Failures of the Nucletron Classic Model High-Dose-Rate Remote Afterloading Brachytherapy Devices," July 6, 1999. [9907010001]

1784. Memorandum to W. Travers from W. Kane, "Closure of Two NMSS Generic Issues," January 26, 2001. [ML010240165]

1785. Memorandum to W. Travers from W. Kane, "Closure of NMSS Generic Issue Relating to Gamma Stereotactic Radiosurgery," February 12, 2001. [ML010390357]

1786. NRC Information Notice 2000-22, "Medical Misadministrations Caused by Human Errors Involving Gamma Stereotactic Radiosurgery (Gamma Knife)," December 18, 2000. [ML003761619]

1787. Memorandum to F. Eltawila from D. Cool, "NMSS Input for Second Quarter FY-2001 Update of the Generic Issue Management Control System," April 12, 2001. [ML011000117]

1788. NUREG-1090, "U.S. Nuclear Regulatory Commission 1983 Annual Report," June 1984.

1789. Memorandum to A. Thadani from S. Collins, "Proposed Generic Safety Issue Related to Secondary Containment Drawdown Time," December 3, 2001. [ML013330114]

1790. NUREG/CR-5640, "Overview and Comparison of U.S. Commercial Nuclear Power Plants," U.S. Nuclear Regulatory Commission, September 1990.

1791. Memorandum to J. Flack from M. Cunningham, "Information Concerning Generic Issue on Combustible Gas Control for PWR Ice Condenser and BWR Mark III Containment Designs," August 15, 2001. [ML012330522]

1792. SECY-00-0198, "Status Report on Study of Risk-Informed Changes to the Technical Requirements of 10 CFR Part 50 (Option 3) and Recommendations on Risk-Informed Changes to 10 CFR 50.44 (Combustible Gas Control)," September 14, 2000. [ML003747699]

1793. NUREG/CR-6427, "Assessment of the DCH Issue for Plants with Ice Condenser Containments," U.S. Nuclear Regulatory Commission, April 2000.

1794. Memorandum to M. Snodderly (NRC) from M. Zavisca, et al. (ERI), "Combustible Gas Control Risk Calculations (DRAFT) for Risk-Informed Alternative to Combustible Gas Control Rule for PWR Ice Condenser, BWR Mark I, and BWR Mark III (10 CFR 50.44)," October 22, 2001.

1795. NUREG/CR-4551, "Evaluation of Severe Accident Risks," U.S. Nuclear Regulatory Commission, (Vol. 1, Rev. 1) December 1993, (Vol. 4, Rev. 1, Part 1) December 1990, (Vol. 7, Rev. 1) March 1993.

1796. Letter Report, "NUREG-1150 Data Base Assessment Program: A Description of the Computational Risk Integration and Conditional Evaluation Tool (CRIC-ET) Software and the NUREG-1150 Data Base," T. D. Brown *et. al.*, March 1995.

1797. Letter to H. VanderMolen (NRC) from V. Mubayi (BNL), "NUREG-1150 Consequence Calculations," July 20, 1994.

1798. NUREG-1742, "Perspectives Gained from the Individual Plant Examination of External Events (IPEEE) Program, Main Report," (Volumes 1 and 2) April 2002.

1799. Memorandum for A. Thadani from J. Wiggins, "Staff Member Concern Regarding the Potential for Resonance Vibrations of Steam Generator Tubes During a Main Steam Line Break Event," June 27, 2000.

1800. Letter to W. Travers from D. Powers, "Differing Professional Opinion on Steam Generator Tube Integrity," February 1, 2001. [ML010780125]

1801 Letter to W. F. Conway (Arizona Public Service Company) from J. B. Martin (NRC), "NRC Inspection Report 50-529/93-14," April 16, 1993. [9305030083]

1802. Letter to A. A. Blind (Consolidated Edison Company of New York, Inc.) from H. J. Miller (NRC), "NRC Augmented Inspection Team - Steam Generator Tube Failure - Report No. 05000247/2000-002," April 28, 2000.

1803. NUREG/IA-0137, "A Study of Control Room Staffing Levels for Advanced Reactors," U.S. Nuclear Regulatory Commission, November 2000. [ML003774060]

1804. NRC Generic Letter 95-05, "Voltage-Based Repair Criteria for Westinghouse Steam Generator Tubes Affected by Outside Diameter Stress Corrosion Cracking," August 3, 1995. [9507310085]

1805. Memorandum to A. Thadani from N. Chokshi, "Initial Screening of Candidate Generic Issue 188, 'Steam Generator Tube Leaks or Ruptures, Concurrent with Containment Bypass from Main Steam Line or Feedwater Line Breaches," May 21, 2001. [ML011410572]

1806. Memorandum to W. Travers from A. Thadani, "Closeout of Generic Safety Issue 172, 'Multiple System Responses Program,'" January 22, 2002. [ML020230162]

1807. Memorandum to W. Travers from S. Collins, "Resolution of Generic Safety Issue (GSI) 173A, 'Spent Fuel Storage Pool for Operating Facilities,'" December 19, 2001. [ML013520142]

1808. Memorandum to T. King from D. Cool, "NMSS Input for First Quarter FY-2002 Update of the Generic Issue Management Control System," January 16, 2002.

1809. Memorandum to S. Collins from A. Thadani, "Generic Issue 80, 'Pipe Break Effects on Control Rod Drive Hydraulic Lines in the Drywells of BWR MARK I and II Containments,'" February 14, 2003. [ML030550470]

1810. Memorandum to M. Knapp from S. Collins, "Periodic Review of Low-Priority Generic Safety Issues," March 25, 1998. [9803310320]

1811. Memorandum to F. Eltawila from M. Mayfield, "Transfer of Responsibility for Generic Issue 80, 'Pipe Break Effects on Control Rod Drive Hydraulic Lines in the Drywells of BWR MARK I and II Containments,'" April 3, 2001. [ML010470257, ML010670420]

1812. NRC Generic Letter 2003-01, "Control Room Habitability," June 12, 2003. [ML031620248]

1813. Memorandum to A. Thadani from H. Vandermolen, "Results of Initial Screening of Generic Issue 192, 'Secondary Containment Drawdown Time,'" July 2, 2002, [ML021840788]

1814. Memorandum to S. Newberry from J. Grobe, "Potentially Generic Safety Issue - BWR ECCS Suction Concerns," May 10, 2002. [ML021340802]

1815. Memorandum to F. Eltawila from S. Newberry, "Potentially Generic Safety Issue - BWR ECCS Suction Concerns," May 28, 2002. [ML021480496]

1816. NRC Bulletin 96-03, "Potential Plugging of Emergency Core Cooling Suction Strainers by Debris in Boiling-Water Reactors," May 6, 1996.

1817. AEOD-E218, "Potential for Air Binding or Degraded Performance of BWR RHR System Pumps During the Recirculation Phase of a LOCA," U.S. Nuclear Regulatory Commission, March 31, 1982.

1818. NEDE-24539-P, "Mark I Containment Program: Full Scale Test Program Final Report," General Electric Company, April 1979.

1819. Memorandum to J. Dyer from S. Reynolds, "Ad Hoc Review Panel Recommendation Regarding a Differing Professional View on BWR ECCS Suction Concerns," April 8, 2002.

1820. CEN 420-P, Volume 1, "Small Break LOCA Realistic Evaluation Model: Calculational Models," October 1993. [9310080210]

1821. NUREG/CR-2792, "An Assessment of Residual Heat Removal and Containment Spray Pump Performance Under Air and Debris Ingesting Conditions," U.S. Nuclear Regulatory Commission, September 1982.

1822. Memorandum to J. Flack from F. Eltawila, "Information on Generic Issue 195, 'Hydrogen Combustion in Foreign BWR Piping,'" March 13, 2003. [ML030720615]

1823. NRC Information Notice 2002-15, "Hydrogen Combustion Events in Foreign BWR Piping," April 12, 2002 [ML020980466], (Supplement 1) May 6, 2003 [ML031210054].

1824. Memorandum to A. Thadani from F. Eltawila, "Results of Initial Screening of Generic Safety Issue 193, 'BWR ECCS Suction Concerns,'" October 16, 2003. [ML032940708]

1825. Information Notice No. 88-23, "Potential for Gas Binding of High-Pressure Safety Injection Pumps During a Loss-of-Coolant Accident," U.S. Nuclear Regulatory Commission, May 12, 1998 [8805060246], (Supplement 1) January 5, 1989 [8812300186], (Supplement 2) January 31, 1990 [9001250020], (Supplement 3) December 10, 1990 [9012040239], (Supplement 4) December 18, 1992 [9212150017], (Supplement 5) April 23, 1999 [9904200058].

1826. Information Notice No. 89-80, "Potential for Water Hammer, Thermal Stratification, and Steam Binding in High-Pressure Coolant Injection Piping," U.S. Nuclear Regulatory Commission, December 1, 1989. [8911270002]

1827. Information Notice No. 90-64, "Potential for Common-Mode Failure of High Pressure Safety Injection Pumps or Release of Reactor Coolant Outside Containment During a Loss-of-Coolant Accident," U.S. Nuclear Regulatory Commission, October 4, 1990. [9111040293]

1828. NRC Letter to All Nuclear Power Reactor Licensees and Applicants, "Information to Licensees Regarding Two NRC Inspection Manual Sections on Resolution of Degraded and Nonconforming Conditions and on Operability (Generic Letter 91-18)," November 7, 1991 [9111040293], (Revision 1) October 8, 1997 [9710060322].

1829. Memorandum to F. Eltawila from G. Holahan, "Hydrogen Detonations in BWRs," March 11, 2003.

1830. AEOD/E910, "Potential for Gas Binding of High Head Safety Injection Pumps Resulting From Inservice Testing of VCT Outlet Isolation Valves," Office for Analysis and Evaluation of Operational Data, U.S. Nuclear Regulatory Commission, December 1989.

1831. AEOD/T515, "Residual Heat Removal Service Water Booster Pump Air Binding at Brunswick Unit 1," Office for Analysis and Evaluation of Operational Data, U.S. Nuclear Regulatory Commission, December 5, 1985.

1832. AEOD/T927, "Follow-up on Steam Binding of AFW Pumps," Office for Analysis and Evaluation of Operational Data, U.S. Nuclear Regulatory Commission, December 29, 1989.

1833. Memorandum to A. Thadani from J. Flack, "Results of Initial Screening of Generic Issue 195, 'Hydrogen Combustion in Foreign BWR Piping,'" February 23, 2004. [ML040850566]

1834. NUREG/CR-1582, "Seismic Hazard Analysis - Overview and Executive Summary," U.S. Nuclear Regulatory Commission, (Vol. 1) April, 1983.

1835. NUREG/CR-5250, "Seismic Hazard Characterization of 69 Nuclear Plant Sites East of the Rocky Mountains," U.S. Nuclear Regulatory Commission, (Vols. 1 to 8) January 1989.

1836. NUREG-1488, "Revised Livermore Seismic Hazard Estimates for 69 Nuclear Power Plant Sites East of the Rocky Mountains," U.S. Nuclear Regulatory Commission, (Draft) October 1993.

1837. Memorandum to J. Flack from D. Dorman, "Proposed Generic Safety Issue on the Implications of Updated Probabilistic Seismic Hazard Estimates," June 6, 2002. [ML021580151]

1838. NUREG/CR-6372, "Recommendations for Probabilistic Seismic Hazard Analysis: Guidance on Uncertainty and Use of Experts," April, 1997. [9705280207]

1839. NUREG/CR-6607, "Guidance for Performing Probabilistic Seismic Hazard Analysis for a Nuclear Plant Site: Example Application to the Southeastern United States," August 18, 1998.

1840. NUREG/CR-6281, "Technical Basis for Revision of Regulatory Guidance on Design Ground Motions: Hazard and Risk-consistent Ground Motion Spectra Guidelines," October 2001.

1841. Memorandum to A. Thadani from N. Chokshi, "Results of Initial Screening of Generic Issue 194, 'Implications of Updated Probabilistic Seismic Hazard Estimates,'" September 12, 2003. [ML032680979]

1842. NRC Letter to All Licensees of Operating Plants and Applicants for Operating Licenses and Holders of Construction Permits, "Control of Heavy Loads," (Generic Letter 80-113) December 22, 1980.

1843. NRC Letter to All Licensees of Operating Plants and Applicants for Operating Licenses and Holders of Construction Permits, "Control of Heavy Loads Generic Letter 81-07)," February 3, 1981.

1844. NRC Letter to All Licensees for Operating Reactors, "Completion of Phase II of 'Control of Heavy Loads at Nuclear Power Plants,' NUREG-0612 (Generic Letter 85-11)" June 28, 1985. [8506270216]

1845. Memorandum to A. Thadani from B. Sheron, "Proposed Generic Safety Issue - Potential Risk and Consequences of Heavy Load Drops in Nuclear Power Plants," April 19, 1999. [ML003714155]

1846. NUREG-1774, "A Survey of Crane Operating Experience at U.S. Nuclear Power Plants from 1968 through 2002," U.S. Nuclear Regulatory Commission, July 2003.

1847. NRC Letter to All Holders of Operating Licenses, Applicants for Operating Licenses and Holders of Construction Permits for Power Reactors (Generic Letter 83-42)," December 19, 1983. [8312190365]

1848. NRC Bulletin 96-02, "Movement of Heavy Loads Over Spent Fuel, Over Fuel in the Reactor Core, or Over Safety-Related Equipment," April 11, 1996. [9604080259]

1849. NUREG-0554, "Single-Failure-Proof Cranes for Nuclear Power Plants," U.S. Nuclear Regulatory Commission, May 1979.

1850. Memorandum to J. Dyer from A. Thadani, "Proposed Recommendations for Generic Issue (GI)-186, 'Potential Risk and Consequences of Heavy Load Drops in Nuclear Power Plants,'" November 12, 2003. [ML033170301]

1851. Memorandum to M. Mayfield from F. Eltawila, "Proposed Recommendations for Generic Issue (GI)-186, 'Potential Risk and Consequences of Heavy Load Drops in Nuclear Power Plants,'" November 21, 2003. [ML033250654]

1852. NRC Regulatory Issue Summary 2003-09, "Environmental Qualification of Low-Voltage Instrumentation and Control Cables," May2, 2003. [ML031220078]

1853. Memorandum to W. Travers from R. Borchardt, "Closeout of Generic Safety Issue (GSI) 168, 'Environmental Qualification of Low-Voltage Instrumentation and Control Cables,'" August 14, 2003. [ML032060326]

APPENDIX B
APPLICABILITY OF NUREG-0933 ISSUES TO OPERATING AND FUTURE REACTOR PLANTS

This appendix contains a listing of those residual GSIs that are applicable to operating and future reactor plants and includes: issues that have been resolved with requirements [I, NOTE 3(a)]; USI, HIGH- and MEDIUM-priority issues scheduled for resolution; nearly-resolved issues scheduled for resolution (NOTES 1 and 2); and issues that are scheduled for prioritization (NOTE 4). The priority designations for all issues are consistent with those listed in Table II of the Introduction. In accordance with 10 CFR 52.47(a)(1)(iv), any future application for design certification must contain proposed technical resolutions for the issues in this listing that are designated USI, HIGH, MEDIUM, NOTE 1, and NOTE 2. (In July 1998, the priority categories NOTES 1 and 2 were eliminated and all GSIs in these categories were given a HIGH priority ranking.[17,18]) Also included in this listing are those GSIs that were either prioritized or resolved with no impact on operating reactor plants but contain recommendations for future reactor plants (NOTE 6).

Legend

NOTES: 1	- Possible Resolution Identified for Evaluation (Discontinued 07-06-98)
2	- Resolution Available [Documented in NUREG, NRC Memorandum, SER or equivalent] (Discontinued 07-06-98)
3(a)	- Resolution Resulted in the Establishment of New Regulatory Requirements [Rule, Regulatory Guide, SRP Change, or equivalent]
4	- Issue to be Prioritized in the Future
6	- New Requirements for Future Plants Recommended
B&W	- Babcock & Wilcox Company
CE	- Combustion Engineering Company
GE	- General Electric Company
CONTINUE	- Work on the issue continues in accordance NRC Management Directive 6.4
HIGH	- High Safety Priority
I	- Resolved TMI Action Plan Item with Implementation of Resolution Mandated by NUREG-0737
MEDIUM	- Medium Safety Priority
MPA	- Multiplant Action
NA	- Not Applicable
TBD	- To Be Determined
USI	- Unresolved Safety Issue
W	- Westinghouse Electric Corporation

Appendix B (Continued)

Action Plan Item/Issue No.	Title	Safety Priority/Status	Affected NSSS Vendor		Operating Plants-MPA No	Operating Plants - Effective Date	Future Plants-Effective Date
			BWR	PWR			
	TMI ACTION PLAN ITEMS						
I.A	OPERATING PERSONNEL						
I.A.1	Operating Personnel and Staffing						
I.A.1.2	Shift Technical Advisor	I	All	All	F-01	09/13/79	09/27/79
I.A.1.2	Shift Supervisor Administrative Duties	I	All	All		09/13/79	09/27/79
I.A.1.3	Shift Manning	I	All	All	F-02	07/31/80	06/26/80
I.A.1.4	Long-Term Upgrading	NOTE 3(a)	All	All		04/28/83	04/28/83
I.A.2	Training and Qualifications of Operating Personnel						
I.A.2.1	Immediate Upgrading of Operator and Senior Operator Training and Qualifications	-	-	-	-	-	-
I.A.2.1(1)	Qualifications - Experience	I	All	All	F-03	03/28/80	03/28/80
I.A.2.1(2)	Training	I	All	All	F-03	03/28/80	03/28/80
I.A.2.1(3)	Facility Certification of Competence and Fitness of Applicants for Operator and Senior Operator Licenses	I	All	All	F-03	03/28/80	03/28/80
I.A.2.3	Administration of Training Programs	I	All	All		03/28/80	03/28/80
I.A.2.6	Long-Term Upgrading of Training and Qualifications	-	-	-	-	-	-
I.A.2.6(1)	Revise Regulatory Guide 1.8	NOTE 3(a)	All	All		TBD	05/--/87
I.A.3	Licensing and Requalification of Operating Personnel						
I.A.3.1	Revise Scope of Criteria for Licensing Examinations	I	All	All		03/28/80	03/28/80
I.A.4	Simulator Use and Development						
I.A.4.1	Initial Simulator Improvement	-	-	-	-	-	-
I.A.4.1(2)	Interim Changes in Training Simulators	NOTE 3(a)	All	All		04/--/81	03/28/81
I.A.4.2	Long-Term Training Simulator Upgrade	-	-	-	-	-	-
I.A.4.2(1)	Research on Training Simulators	NOTE 3(a)	All	All		04/--/87	04/--/87
I.A.4.2(2)	Upgrade Training Simulator Standards	NOTE 3(a)	All	All		04/--/81	04/--/81
I.A.4.2(3)	Regulatory Guide on Training Simulators	NOTE 3(a)	All	All		04/--/81	04/--/81
I.A.4.2(4)	Review Simulators for Conformance to Criteria	NOTE 3(a)	All	All		03/25/87	03/25/87

Appendix B (Continued)

Action Plan Item/Issue No.	Title	Safety Priority/Status	Affected NSSS Vendor		Operating Plants-MPA No	Operating Plants - Effective Date	Future Plants-Effective Date
			BWR	PWR			
I.C	OPERATING PROCEDURES						
I.C.1	Short-Term Accident Analysis and Procedures Revision	-	-	-	-	-	-
I.C.1(1)	Small Break LOCAs	I	All	All		09/13/79	09/13/79
I.C.1(2)	Inadequate Core Cooling	I	All	All	F-04	09/13/79	09/13/79
I.C.1(3)	Transients and Accidents	I	All	All	F-05	09/13/79	09/27/79
I.C.2	Shift and Relief Turnover Procedures	I	All	All		09/13/79	09/27/79
I.C.3	Shift Supervisor Responsibilities	I	All	All		09/13/79	09/27/79
I.C.4	Control Room Access	I	All	All		09/13/79	09/27/79
I.C.5	Procedures for Feedback of Operating Experience to Plant Staff	I	All	All	F-06	05/07/80	06/26/80
I.C.6	Procedures for Verification of Correct Performance of Operating Activities	I	All	All	F-07	10/31/80	10/31/80
I.C.7	NSSS Vendor Review of Procedures	I	All	All		NA	06/26/80
I.C.8	Pilot Monitoring of Selected Emergency Procedures for Near-Term Operating License Applicants	I	All	All		NA	06/26/80
I.C.9	Long-Term Program Plan for Upgrading of Procedures	NOTE 3(a)	All	All		09/13/79	06/--/85
I.D	CONTROL ROOM DESIGN						
I.D.1	Control Room Design Reviews	I	All	All	F-08	06/26/80	06/26/80
I.D.2	Plant Safety Parameter Display Console	I	All	All	F-09	06/26/80	06/26/80
I.D.5	Improved Control Room Instrumentation Research	-	-	-	-	-	-
I.D.5(2)	Plant Status and Post-Accident Monitoring	NOTE 3(a)	All	All		NA	12/--/80
I.F	QUALITY ASSURANCE						
I.F.2	Develop More Detailed QA Criteria	-	-	-	-	-	-
I.F.2(2)	Include QA Personnel in Review and Approval of Plant Procedures	NOTE 3(a)	All	All		NA	07/--/81
I.F.2(3)	Include QA Personnel in All Design, Construction, Installation, Testing, and Operation Activities	NOTE 3(a)	All	All		NA	07/--/81
I.F.2(6)	Increase the Size of Licensees' QA Staff	NOTE 3(a)	All	All		NA	07/--/81
I.F.2(9)	Clarify Organizational Reporting Levels for the QA Organization	NOTE 3(a)	All	All		NA	07/--/81
I.G	PREOPERATIONAL AND LOW-POWER TESTING						
I.G.1	Training Requirements	I	All	All		NA	06/26/80
I.G.2	Scope of Test Program	NOTE 3(a)	All	All		NA	07/--/81

Appendix B (Continued)

Action Plan Item/Issue No.	Title	Safety Priority/Status	Affected NSSS Vendor		Operating Plants-MPA No	Operating Plants - Effective Date	Future Plants-Effective Date
			BWR	PWR			
II.B	CONSIDERATION OF DEGRADED OR MELTED CORES IN SAFETY REVIEW						
II.B.1	Reactor Coolant System Vents	I	All	All	F-10	09/13/79	09/27/79
II.B.2	Plant Shielding to Provide Access to Vital Areas and Protect Safety Equipment for Post-Accident Operation	I	All	All	F-11	09/13/79	09/27/79
II.B.3	Post-Accident Sampling	I	All	All	F-12	09/13/79	09/27/79
II.B.4	Training for Mitigating Core Damage	I	All	All	F-13	03/28/80	03/28/80
II.B.6	Risk Reduction for Operating Reactors at Sites with High Population Densities	NOTE 3(a)	All	All		TBD	NA
II.B.8	Rulemaking Proceeding on Degraded Core Accidents	NOTE 3(a)	All	All		TBD	01/25/85
II.D	REACTOR COOLANT SYSTEM RELIEF AND SAFETY VALVES						
II.D.1	Testing Requirements	I	All	All	F-14	09/13/79	09/27/79
II.D.3	Relief and Safety Valve Position Indication	I	All	All		07/21/79	09/27/79
II.E	SYSTEM DESIGN						
II.E.1	Auxiliary Feedwater System						
II.E.1.1	Auxiliary Feedwater System Evaluation	I	NA	All	F15	03/10/80	03/10/80
II.E.1.2	Auxiliary Feedwater System Automatic Initiation and Flow Indication	I	NA	All	F-16, F-17	09/13/79	09/27/79
II.E.1.3	Update Standard Review Plan and Develop Regulatory Guide	NOTE 3(a)	All	All		NA	07/--/81
II.E.3	Decay Heat Removal						
II.E.3.1	Reliability of Power Supplies for Natural Circulation	I	NA	All		09/13/79	09/27/79
II.E.4	Containment Design						
II.E.4.1	Dedicated Penetrations	I	All	All	F-18	09/13/79	09/27/79
II.E.4.2	Isolation Dependability	I	All	All	F-19	09/13/79	09/27/79
II.E.4.4	Purging	-	-	-	-	-	-
II.E.4.4(1)	Issue Letter to Licensees Requesting Limited Purging	NOTE 3(a)	All	All		11/28/78	NA
II.E.4.4(2)	Issue Letter to Licensees Requesting Information on Isolation Letter	NOTE 3(a)	All	All		10/22/79	NA
II.E.4.4(3)	Issue Letter to Licensees on Valve Operability	NOTE 3(a)	All	All		09/27/79	NA

Appendix B (Continued)

Action Plan Item/Issue No.	Title	Safety Priority/Status	Affected NSSS Vendor		Operating Plants-MPA No	Operating Plants - Effective Date	Future Plants-Effective Date
			BWR	PWR			
II.E.5	Design Sensitivity of B&W Reactors						
II.E.5.1	Design Evaluation	NOTE 3(a)	NA	B&W			
II.E.5.2	B&W Reactor Transient Response Task Force	NOTE 3(a)	NA	B&W			
II.E.6	In Situ Testing of Valves						
II.E.6.1	Test Adequacy Study	NOTE 3(a)	All	All		06/--/89	06/--/89
II.F	INSTRUMENTATION AND CONTROLS						
II.F.1	Additional Accident Monitoring Instrumentation	I	All	All	F-20, F-21 F-22, F-23 F-24, F-25	09/13/79	09/27/79
II.F.2	Identification of and Recovery from Conditions Leading to Inadequate Core Cooling	I	All	All	F-26	070/2/79	09/27/79
II.F.3	Instruments for Monitoring Accident Conditions	NOTE 3(a)	All	All		NA	12/--/80
II.G	ELECTRICAL POWER						
II.G.1	Power Supplies for Pressurizer Relief Valves, Block Valves, and Level Indicators	I	NA	All		09/13/79	09/27/79
II.J	GENERAL IMPLICATIONS OF TMI FOR DESIGN AND CONSTRUCTION ACTIVITIES						
II.J.4	Revise Deficiency Reporting Requirements						
II.J.4.1	Revise Deficiency Reporting Requirements	NOTE 3(a)	All	All		07/31/91	07/31/91
II.K	MEASURES TO MITIGATE SMALL-BREAK LOSS-OF-COOLANT ACCIDENTS AND LOSS-OF-FEEDWATER ACCIDENTS						
II.K.1	IE Bulletins	-	-	-	-	-	-
II.K.1(1)	Review TMI-2 PNs and Detailed Chronology of the TMI-2 Accident	NOTE 3(a)	All	All		03/31/80	NA
II.K.1(2)	Review Transients Similar to TMI-2 That Have Occurred at Other Facilities and NRC Evaluation of Davis-Besse Event	NOTE 3(a)	NA	B&W		03/31/80	NA
II.K.1(3)	Review Operating Procedures for Recognizing, Preventing, and Mitigating Void Formation in Transients and Accidents	NOTE 3(a)	NA	All		03/31/80	NA

Appendix B (Continued)

Action Plan Item/Issue No.	Title	Safety Priority/Status	Affected NSSS Vendor		Operating Plants-MPA No	Operating Plants - Effective Date	Future Plants-Effective Date
			BWR	PWR			
II.K.1(4)	Review Operating Procedures and Training Instructions	NOTE 3(a)	All	All		03/31/80	NA
II.K.1(5)	Safety-Related Valve Position Description	NOTE 3(a)	All	All		03/31/80	03/31/80
II.K.1(6)	Review Containment Isolation Initiation Design and Procedures	NOTE 3(a)	All	All		03/31/80	NA
II.K.1(7)	Implement Positive Position Controls on Valves That Could Compromise or Defeat AFW Flow	NOTE 3(a)	NA	B&W		03/31/80	NA
II.K.1(8)	Implement Procedures That Assure Two Independent 100% AFW Flow Paths	NOTE 3(a)	NA	B&W		03/31/80	NA
II.K.1(9)	Review Procedures to Assure That Radioactive Liquids and Gases Are Not Transferred out of Containment Inadvertently	NOTE 3(a)	All	All		03/31/80	NA
II.K.1(10)	Review and Modify Procedures for Removing Safety-Related Systems from Service	NOTE 3(a)	All	All		03/31/80	03/31/80
II.K.1(11)	Make All Operating and Maintenance Personnel Aware of the Seriousness and Consequences of the Erroneous Actions Leading up to, and in Early Phases of, the TMI-2 Accident	NOTE 3(a)	All	All		03/31/80	NA
II.K.1(12)	One Hour Notification Requirement and Continuous Communications Channels	NOTE 3(a)	All	All			NA
II.K.1(13)	Propose Technical Specification Changes Reflecting Implementation of All Bulletin Items	NOTE 3(a)	All	All		01/01/81	01/01/81
II.K.1(14)	Review Operating Modes and Procedures to Deal with Significant Amounts of Hydrogen	NOTE 3(a)	GE	CE, W		03/31/80	NA
II.K.1(15)	For Facilities with Non-Automatic AFW Initiation, Provide Dedicated Operator in Continuous Communication with CR to Operate AFW	NOTE 3(a)	NA	CE, W		NA	
II.K.1(16)	Implement Procedures That Identify PRZ PORV "Open" Indications and That Direct Operator to Close Manually at "Reset" Setpoint	NOTE 3(a)	NA	CE, W		NA	
II.K.1(17)	Trip PZR Level Bistable so That PZR Low Pressure Will Initiate Safety Injection	NOTE 3(a)	NA	W			
II.K.1(18)	Develop Procedures and Train Operators on Methods of Establishing and Maintaining Natural Circulation	NOTE 3(a)	NA	B&W		NA	
II.K.1(19)	Describe Design and Procedure Modifications to Reduce Likelihood of Automatic PZR PORV Actuation in Transients	NOTE 3(a)	NA	B&W		03/31/80	NA
II.K.1(20)	Provide Procedures and Training to Operators for Prompt Manual Reactor Trip for LOFW, TT, MSIV Closure, LOOP, LOSG Level, and LO PZR Level	NOTE 3(a)	NA	B&W		03/31/80	03/31/80

Appendix B (Continued)

Action Plan Item/Issue No.	Title	Safety Priority/Status	Affected NSSS Vendor		Operating Plants-MPA No	Operating Plants - Effective Date	Future Plants-Effective Date
			BWR	PWR			
II.K.1(21)	Provide Automatic Safety-Grade Anticipatory Reactor Trip for LOFW, TT, or Significant Decrease in SG Level	NOTE 3(a)	NA	B&W		03/31/80	03/31/80
II.K.1(22)	Describe Automatic and Manual Actions for Proper Functioning of Auxiliary Heat Removal Systems When FW System Not Operable	NOTE 3(a)	All	NA		03/31/80	03/31/80
II.K.1(23)	Describe Uses and Types of RV Level Indication for Automatic and Manual Initiation Safety Systems	NOTE 3(a)	All	NA		03/31/80	03/31/80
II.K.1(24)	Perform LOCA Analyses for a Range of Small-Break Sizes and a Range of Time Lapses Between Reactor Trip and RCP Trip	NOTE 3(a)	NA	All		NA	
II.K.1(25)	Develop Operator Action Guidelines	NOTE 3(a)	NA	All		NA	
II.K.1(26)	Revise Emergency Procedures and Train ROs and SROs	NOTE 3(a)	NA	All		NA	
II.K.1(27)	Provide Analyses and Develop Guidelines and Procedures for Inadequate Core Cooling Conditions	NOTE 3(a)	NA	All		NA	
II.K.1(28)	Provide Design That Will Assure Automatic RCP Trip for All Circumstances Where Required	NOTE 3(a)	NA	All		01/01/81	01/01/82
II.K.2	Commission Orders on B&W Plants	-	-	-	-	-	-
II.K.2(1)	Upgrade Timeliness and Reliability of AFW System	NOTE 3(a)	NA	B&W		NA	
II.K.2(2)	Procedures and Training to Initiate and Control AFW Independent of Integrated Control System	NOTE 3(a)	NA	B&W		NA	
II.K.2(3)	Hard-Wired Control-Grade Anticipatory Reactor Trips	NOTE 3(a)	NA	B&W		NA	
II.K.2(4)	Small-Break LOCA Analysis, Procedures and Operator Training	NOTE 3(a)	NA	B&W		NA	
II.K.2(5)	Complete TMI-2 Simulator Training for All Operators	NOTE 3(a)	NA	B&W		NA	
II.K.2(6)	Reevaluate Analysis for Dual-Level Setpoint Control	NOTE 3(a)	NA	B&W		NA	
II.K.2(7)	Reevaluate Transient of September 24, 1977	NOTE 3(a)	NA	B&W		NA	
II.K.2(9)	Analysis and Upgrading of Integrated Control System	I	NA	B&W	F-27	01/01/81	01/01/81
II.K.2(10)	Hard-Wired Safety-Grade Anticipatory Reactor Trips	I	NA	B&W	F-28	01/01/81	01/01/81
II.K.2(11)	Operator Training and Drilling	I	NA	B&W	F-29	01/01/81	01/01/81
II.K.2(13)	Thermal-Mechanical Report on Effect of HPI on Vessel Integrity for Small-Break LOCA With No AFW	I	NA	B&W	F-30	01/01/81	01/01/81
II.K.2(14)	Demonstrate That Predicted Lift Frequency of PORVs and SVs Is Acceptable	I	NA	B&W	F-31	01/01/81	01/01/81
II.K.2(15)	Analysis of Effects of Slug Flow on Once-Through Steam Generator Tubes After Primary System Voiding	I	NA	B&W		06/01/80	06/01/80
II.K.2(16)	Impact of RCP Seal Damage Following Small-Break LOCA With Loss of Offsite Power	I	NA	B&W	F-32	06/01/80	06/01/80

Appendix B (Continued)

Action Plan Item/Issue No.	Title	Safety Priority/Status	Affected NSSS Vendor		Operating Plants-MPA No	Operating Plants - Effective Date	Future Plants-Effective Date
			BWR	PWR			
II.K.2(17)	Analysis of Potential Voiding in RCS During Anticipated Transients	I	NA	B&W	F-33	NA	
II.K.2(19)	Benchmark Analysis of Sequential AFW Flow to Once-Through Steam Generator	I	NA	B&W	F-34	01/01/81	NA
II.K.2(20)	Analysis of Steam Response to Small-Break LOCA That Causes System Pressure to Exceed PORV Setpoint	I	NA	B&W	F-35	01/01/81	NA
II.K.2(21)	LOFT L3-1 Predictions	NOTE 3(a)	NA	B&W		NA	
II.K.3	Final Recommendations of Bulletins and Orders Task Force	-	-	-	-	-	-
II.K.3(1)	Install Automatic PORV Isolation System and Perform Operational Test	I	NA	All	F-36	07/01/81	07/01/81
II.K.3(2)	Report on Overall Safety Effect of PORV Isolation System	I	NA	All	F-37	01/01/81	01/01/81
II.K.3(3)	Report Safety and Relief Valve Failures Promptly and Challenges Annually	I	All	All	F-38	04/01/80	04/01/80
II.K.3(5)	Automatic Trip of Reactor Coolant Pumps	I	NA	All	F-39, G-01	01/01/81	01/01/81
II.K.3(7)	Evaluation of PORV Opening Probability During Overpressure Transient	I	NA	B&W		01/01/81	01/01/81
II.K.3(9)	Proportional Integral Derivative Controller Modification	I	NA	W	F-40	07/01/80	07/01/80
II.K.3(10)	Anticipatory Trip Modification Proposed by Some Licensees to Confine Range of Use to High Power Levels	I	NA	W	F-41		
II.K.3(11)	Control Use of PORV Supplied by Control Components, Inc. Until Further Review Complete	I	All	All			
II.K.3(12)	Confirm Existence of Anticipatory Trip Upon Turbine Trip	I	NA	W	F-42	07/01/80	07/01/80
II.K.3(13)	Separation of HPCI and RCIC System Initiation Levels	I	GE	NA	F-43	10/01/80	10/01/80
II.K.3(14)	Isolation of Isolation Condensers on High Radiation	I	GE	NA	F-44	01/01/81	NA
II.K.3(15)	Modify Break Detection Logic to Prevent Spurious Isolation of HPCI and RCIC Systems	I	GE	NA	F-45	01/01/81	01/01/81
II.K.3(16)	Reduction of Challenges and Failures of Relief Valves - Feasibility Study and System Modification	I	GE	NA	F-46	01/01/81	01/01/81
II.K.3(17)	Report on Outage of ECC Systems - Licensee Report and Technical Specification Changes	I	GE	NA	F-47	01/01/81	01/01/81
II.K.3(18)	Modification of ADS Logic - Feasibility Study and Modification for Increased Diversity for Some Event Sequences	I	GE	NA	F-48	01/01/81	01/01/81
II.K.3(19)	Interlock on Recirculation Pump Loops	I	GE	NA	F-49	01/01/81	NA
II.K.3(20)	Loss of Service Water for Big Rock Point	I	GE	NA		01/01/81	NA

Appendix B (Continued)

Action Plan Item/Issue No.	Title	Safety Priority/Status	Affected NSSS Vendor		Operating Plants-MPA No	Operating Plants - Effective Date	Future Plants-Effective Date
			BWR	PWR			
II.K.3(21)	Restart of Core Spray and LPCI Systems on Low Level - Design and Modification	I	GE	NA	F-50	01/01/81	01/01/81
II.K.3(22)	Automatic Switchover of RCIC System Suction - Verify Procedures and Modify Design	I	GE	NA	F-51	01/01/81	01/01/81
II.K.3(24)	Confirm Adequacy of Space Cooling for HPCI and RCIC Systems	I	GE	NA	F-52	01/01/82	01/01/82
II.K.3(25)	Effect of Loss of AC Power on Pump Seals	I	GE	NA	F-53	01/01/82	01/01/82
II.K.3(27)	Provide Common Reference Level for Vessel Level Instrumentation	I	GE	NA	F-54	10/01/80	10/01/80
II.K.3(28)	Study and Verify Qualification of Accumulators on ADS Valves	I	GE	NA	F-55	01/01/82	01/01/82
II.K.3(29)	Study to Demonstrate Performance of Isolation Condensers with Non-Condensibles	I	GE	NA	F-56	04/01/81	NA
II.K.3(30)	Revised Small-Break LOCA Methods to Show Compliance with 10 CFR 50, Appendix K	I	All	All	F-57	01/01/83	01/01/83
II.K.3(31)	Plant-Specific Calculations to Show Compliance with 10 CFR 50.46	I	All	All	F-58	01/01/83	01/01/83
II.K.3(44)	Evaluation of Anticipated Transients with Single Failure to Verify No Significant Fuel Failure	I	GE	NA	F-59	01/01/81	01/01/81
II.K.3(45)	Evaluate Depressurization with Other Than Full ADS	I	GE	NA	F-60	01/01/81	01/01/81
II.K.3(46)	Response to List of Concerns from ACRS Consultant	I	GE	NA	F-61	07/01/80	07/01/80
II.K.3(57)	Identify Water Sources Prior to Manual Activation of ADS	I	GE	NA	F-62	10/01/80	NA
III.A	EMERGENCY PREPAREDNESS AND RADIATION EFFECTS						
III.A.1	Improve Licensee Emergency Preparedness - Short Term						
III.A.1.1	Upgrade Emergency Preparedness	-	-	-	-	-	-
III.A.1.1(1)	Implement Action Plan Requirements for Promptly Improving Licensee Emergency Preparedness	I	All	All		10/10/79	08/19/80
III.A.1.2	Upgrade Licensee Emergency Support Facilities	-	-	-	-	-	-
III.A.1.2(1)	Technical Support Center	I	All	All	F-63	09/13/79	09/27/79
III.A.1.2(2)	On-Site Operational Support Center	I	All	All	F-64	09/13/79	09/27/79
III.A.1.2(3)	Near-Site Emergency Operations Facility	I	All	All	F-65	09/13/79	09/27/79
III.A.2	Improving Licensee Emergency Preparedness-Long Term						
III.A.2.1	Amend 10 CFR 50 and 10 CFR 50, Appendix E	-	-	-	-	-	-
III.A.2.1(1)	Publish Proposed Amendments to the Rules	NOTE 3(a)	All	All			
III.A.2.1(4)	Revise Inspection Program to Cover Upgraded Requirements	I	All	All	F-67		

Appendix B (Continued)

Action Plan Item/Issue No.	Title	Safety Priority/Status	Affected NSSS Vendor		Operating Plants-MPA No	Operating Plants - Effective Date	Future Plants-Effective Date
			BWR	PWR			
III.A.2.2	Development of Guidance and Criteria	I	All	All	F-68		
III.A.3	Improving NRC Emergency Preparedness						
III.A.3.3	Communications	-	-	-	-	-	-
III.A.3.3(1)	Install Direct Dedicated Telephone Lines	NOTE 3(a)	All	All			
III.A.3.3(2)	Obtain Dedicated, Short-Range Radio Communication Systems	NOTE 3(a)	All	All			
III.D	RADIATION PROTECTION						
III.D.1	Radiation Source Control						
III.D.1.1	Primary Coolant Sources Outside the Containment Structure	-	-	-	-	-	-
III.D.1.1(1)	Review Information Submitted by Licensees Pertaining to Reducing Leakage from Operating Systems	I	All	All		07/02/79	09/27/79
III.D.3	Worker Radiation Protection Improvement						
III.D.3.3	Inplant Radiation Monitoring	-	-	-	-	-	-
III.D.3.3(1)	Issue Letter Requiring Improved Radiation Sampling Instrumentation	I	All	All	F-69	09/13/79	09/27/79
III.D.3.3(2)	Set Criteria Requiring Licensees to Evaluate Need for Additional Survey Equipment	NOTE 3(a)	All	All		09/13/79	09/27/79
III.D.3.3(3)	Issue a Rule Change Providing Acceptable Methods for Calibration of Radiation-Monitoring Instruments	NOTE 3(a)	All	All		09/13/79	09/27/79
III.D.3.3(4)	Issue a Regulatory Guide	NOTE 3(a)	All	All		09/13/79	09/27/79
III.D.3.4	Control Room Habitability	I	All	All	F-70	05/07/80	06/26/80
	TASK ACTION PLAN ITEMS						
A-1	Water Hammer (former USI)	NOTE 3(a)	All	All		NA	03/15/84
A-2	Asymmetric Blowdown Loads on Reactor Primary Coolant Systems (former USI)	NOTE 3(a)	NA	All	D-10	01/--/81	01/--/81
A-3	Westinghouse Steam Generator Tube Integrity (former USI)	NOTE 3(a)	NA	W		04/17/85	04/17/85
A-4	CE Steam Generator Tube Integrity (former USI)	NOTE 3(a)	NA	CE		04/17/85	04/17/85
A-5	B&W Steam Generator Tube Integrity (former USI)	NOTE 3(a)	NA	B&W		04/17/85	04/17/85
A-6	Mark I Short-Term Program (former USI)	NOTE 3(a)	GE	NA		12/--/77	NA
A-7	Mark I Long-Term Program (former USI)	NOTE 3(a)	GE	NA	D-01	08/--/82	08/--/82
A-8	Mark II Containment Pool Dyanmic Loads - Long Term Program (former USI)	NOTE 3(a)	GE	NA		08/--/81	08/--/81
A-9	ATWS (former USI)	NOTE 3(a)	All	All		06/26/84	06/26/84

Appendix B (Continued)

Action Plan Item/Issue No.	Title	Safety Priority/Status	Affected NSSS Vendor		Operating Plants-MPA No	Operating Plants - Effective Date	Future Plants-Effective Date
			BWR	PWR			
A-10	BWR Feedwater Nozzle Cracking (former USI)	NOTE 3(a)	All	NA	B-25	11/--/80	11/--/80
A-11	Reactor Vessel Materials Toughness (former USI)	NOTE 3(a)	All	All		10/--/82	NA
A-12	Fracture Toughness of Steam Generator and Reactor Coolant Pump Supports (former USI)	NOTE 3(a)	NA	All		NA	TBD
A-13	Snubber Operability Assurance	NOTE 3(a)	All	All	B-17, B-22	1980	1980
A-16	Steam Effects on BWR Core Spray Distribution	NOTE 3(a)	GE	NA	D-12	NA	
A-24	Qualification of Class 1E Safety Related Equipment (former USI)	NOTE 3(a)	All	All	B-60	08/--/81	08/--/81
A-25	Non-Safety Loads on Class 1E Power Sources	NOTE 3(a)	All	All		09/--/78	
A-26	Reactor Vessel Pressure Transient Protection (former USI)	NOTE 3(a)	NA	All	B-04	09/--/78	09/--/78
A-28	Increase in Spent Fuel Pool Storage Capacity	NOTE 3(a)	All	All		04/17/78	NA
A-31	RHR Shutdown Requirements (former USI)	NOTE 3(a)	All	All		05/--/78	10/01/78
A-35	Adequacy of Offsite Power Systems	NOTE 3(a)	All	All	B-23	06/02/77	1980
A-36	Control of Heavy Loads Near Spent Fuel (former USI)	NOTE 3(a)	All	All	C-10, C-15	07/--/80	07/--/80
A-39	Determination of Safety Relief Valve Pool Dynamic Loads and Temperature Limits (former USI)	NOTE 3(a)	GE	NA		02/29/80	09/30/80
A-40	Seismic Design Criteria (former USI)	NOTE 3(a)	All	All		TBD	09/--/89
A-42	Pipe Cracks in Boiling Water Reactors (former USI)	NOTE 3(a)	All	NA	B-05	02/--/81	02/--/81
A-43	Containment Emergency Sump Performance (former USI)	NOTE 3(a)	NA	All		NA	11/--/85
A-44	Station Blackout (former USI)	NOTE 3(a)	All	All		TBD	06/--/88
A-46	Seismic Qualification of Equipment in Operating Plants (former USI)	NOTE 3(a)	All	All		02/--/87	NA
A-47	Safety Implications of Control Systems (former USI)	NOTE 3(a)	All	All		09/20/89	09/20/89
A-48	Hydrogen Control Measures and Effects of Hydrogen Burns on Safety Equipment	NOTE 3(a)	All	W		12/--/81	12/--/81
A-49	Pressurized Thermal Shock (former USI)	NOTE 3(a)	NA	All	A-21	TBD	07/--/85
B-10	Behavior of BWR Mark III Containments	NOTE 3(a)	GE	NA		NA	09/--/84
B-36	Develop Design, Testing, and Maintenance Criteria for Atmosphere Cleanup System Air Filtration and Adsorption Units for Engineered Safety Feature Systems and for Normal Ventilation Systems	NOTE 3(a)	All	All		03/--/78	
B-56	Diesel Reliability	NOTE 3(a)	All	All	D-19	06/--/93	06/--/93
B-63	Isolation of Low Pressure Systems Connected to the Reactor Coolant Pressure Boundary	NOTE 3(a)	All	All	B-45	04/20/81	
B-64	Decommissioning of Reactors	NOTE 3(a)	All	All		06/27/88	NA
B-66	Control Room Infiltration Measurements	NOTE 3(a)	All	All		NA	07/--/81
C-1	Assurance of Continuous Long Term Capability of Hermetic Seals on Instrumentation and Electrical Equipment	NOTE 3(a)	All	All		05/27/80	05/27/80

Appendix B (Continued)

Action Plan Item/Issue No.	Title	Safety Priority/Status	Affected NSSS Vendor		Operating Plants-MPA No	Operating Plants - Effective Date	Future Plants-Effective Date
			BWR	PWR			
C-10	Effective Operation of Containment Sprays in a LOCA	NOTE 3(a)	All	All		NA	
C-17	Interim Acceptance Criteria for Solidification Agents for Radioactive Solid Wastes	NOTE 3(a)	All	All		12/27/82	12/27/82
		NEW GENERIC ISSUES					
25.	Automatic Air Header Dump on BWR Scram System	NOTE 3(a)	All	NA		01/09/81	01/09/81
40.	Safety Concerns Associated with Pipe Breaks in the BWR Scram System	NOTE 3(a)	All	NA	B-65	08/31/81	08/31/81
41.	BWR Scram Discharge Volume Systems	NOTE 3(a)	All	NA	B-58	12/09/80	NA
43.	Reliability of Air Systems	NOTE 3(a)	All	All	B-107	08/08/88	08/08/88
45	Inoperability of Instrumentation Due to Extreme Cold Weather	NOTE 3(a)	All	All		NA	09/01/83
51.	Proposed Requirements for Improving the Reliability of Open Cycle Service Water Systems	NOTE 3(a)	All	All	L-913	07/18/89	07/18/89
67.	Steam Generator Staff Actions	-	-	-	-	-	-
67.3.3	Improved Accident Monitoring	NOTE 3(a)	All	All	A-17	12/17/82	12/17/82
70.	PORV and Block Valve Reliability	NOTE 3(a)	NA	All		06/25/90	06/25/90
73.	Detached Thermal Sleeves	NOTE 3(a)	NA	W		NA	
75.	Generic Implications of ATWS Events at the Salem Nuclear Plant	NOTE 3(a)	All	All	B-76, B-77, B-78, B-79, B-80, B-81, B-82, B-85, B-86, B-87, B-88, B-89, B-90, B-91, B-92, B-93	07/08/83	TBD
80.	Pipe Break Effects on Control Rod Drive Hydraulic Lines in the Drywells of BWR MARK Iand II Containments	CONTINUE	All	NA		TBD	TBD
86.	Long Range Plan for Dealing with Stress Corrosion Cracking in BWR Piping	NOTE 3(a)	All	NA	B-84	TBD	TBD
87.	Failure of HPCI Steam Line Without Isolation	NOTE 3(a)	All	All		06/28/89	06/28/89
89.	Stiff Pipe Clamps	NOTE 6	All	All	NA	NA	TBD
93.	Steam Binding of Auxiliary Feedwater Pumps	NOTE 3(a)	NA	All	B-98	10/--/85	10/--/85
94.	Additional Low Temperature Overpressure Protection for Light Water Reactors	NOTE 3(a)	NA	CE, W		06/25/90	06/25/90
99.	RCS/RHR Suction Line Valve Interlock on PWRs	NOTE 3(a)	NA	All	L-817	10/17/88	10/17/88
103.	Design for Probable Maximum Precipitation	NOTE 3(a)	All	All		10/19/89	10/19/89
118.	Tendon Anchorage Failure	NOTE 3(a)	All	All	NA	NA	07/--/90
124.	Auxiliary Feedwater System Reliability	NOTE 3(a)	All	All		TBD	TBD

Appendix B (Continued)

Action Plan Item/Issue No.	Title	Safety Priority/Status	Affected NSSS Vendor		Operating Plants-MPA No	Operating Plants - Effective Date	Future Plants-Effective Date
			BWR	PWR			
128.	Electrical Power Reliability	NOTE 3(a)	All	All		04/29/91	04/29/91
130.	Essential Service Water Pump Failures at Multiplant Sites	NOTE 3(a)	NA	All		09/19/91	09/19/91
155	Generic Concerns Arising from TMI-2 Cleanup	-	-	-	-	-	-
155.1	More Realistic Source Term Assumptions	NOTE 3(a)	All	All	NA	NA	02/--/95
156	Systematic Evaluation Program	-	-	-	-	-	-
156.6.1	Pipe Break Effects on Systems and Components	HIGH	All	All		TBD	TBD
163.	Multiple Steam Generator Tube Leakage	HIGH	NA	All		TBD	TBD
177.	Vehicle Intrusion at TMI	NOTE 3(a)	All	All		08/01/94	08/01/94
185.	Control of Recriticality Following Small-Break LOCA in PWRs	HIGH	All	All		TBD	TBD
186.	Potential Risk and Consequences of Heavy Load Drops in Nuclear Power Plants	CONTINUE	All	All		TBD	TBD
188.	Steam Generator Tube Leaks/Ruptures Concurrent With Containment Bypass	CONTINUE	All	All		TBD	TBD
189.	Susceptibility of Ice Condenser Containments to Early Failure from Hydogen Combustion During A Severe Accident	CONTINUE	All	All		TBD	TBD
191.	Assessment of Debris Accumulation on PWR Sump Performance	HIGH	NA	All		TBD	TBD
193.	BWR ECCS Suction Concerns	CONTINUE	All	NA		TBD	TBD
196.	Boral Degradation	NOTE 4	All	All		TBD	TBD
		HUMAN FACTORS ISSUES					
HF1	STAFFING AND QUALIFICATIONS						
HF.1.1	Shift Staffing	NOTE 3(a)	All	All		01/--/84	01/--/84

NRC FORM 335
(2-89)
NRCM 1102,
3201, 3202

U.S. NUCLEAR REGULATORY COMMISSION

BIBLIOGRAPHIC DATA SHEET

(See instructions on the reverse)

1. REPORT NUMBER
(Assigned by NRC, Add Vol., Supp., Rev., and Addendum Numbers, if any.)

NUREG-0933
Supplement 28

2. TITLE AND SUBTITLE

A Prioritization of Generic Safety Issues

3. DATE REPORT PUBLISHED

MONTH	YEAR
June	2004

4. FIN OR GRANT NUMBER

5. AUTHOR(S)

R. Emrit, et al.

6. TYPE OF REPORT

7. PERIOD COVERED *(Inclusive Dates)*

07-01-2003 to 06-30-2004

8. PERFORMING ORGANIZATION - NAME AND ADDRESS *(If NRC, provide Division, Office or Region, U.S. Nuclear Regulatory Commission, and mailing address; if contractor, provide name and mailing address.)*

Division of Systems Analysis and Regulatory Effectiveness
Office of Nuclear Regulatory Research
U.S. Nuclear Regulatory Commission
Washington, DC 20555-0001

9. SPONSORING ORGANIZATION - NAME AND ADDRESS *(If NRC, type "Same as above"; if contractor, provide NRC Division, Office or Region, U.S. Nuclear Regulatory Commission, and mailing address.)*

Division of Systems Analysis and Regulatory Effectiveness
Office of Nuclear Regulatory Research
U.S. Nuclear Regulatory Commission
Washington, DC 20555-0001

10. SUPPLEMENTARY NOTES

11. ABSTRACT *(200 words or less)*

The report presents the safety priority rankings for generic safety issues related to nuclear power plants. The purpose of these rankings is to assist in the timely and efficient allocation of NRC resources for the resolution of those safety issues that have a significant potential for reducing risk. The safety priority rankings are HIGH, MEDIUM, LOW, DROP, and CONTINUE, and have been assigned on the basis of risk significance estimates, the ratio of risk to costs and other impacts estimated to result if resolution of the safety issues were implemented, and the consideration of uncertainties and other quantitative and qualitative factors. To the extent practical, estimates are quantitative.

12. KEY WORDS/DESCRIPTORS *(List words or phrases that will assist researchers in locating the report.)*

generic safety issues

13. AVAILABILITY STATEMENT

unlimited

14. SECURITY CLASSIFICATION

(This Page)

unclassified

(This Report)

unclassified

15. NUMBER OF PAGES

16. PRICE

This form was electronically produced by Elite Federal Forms, Inc.

Printed
on recycled
paper

Federal Recycling Program