New NPP Designs and licensing

S A Bhardwaj

Nuclear Power Programme Status

In Operation

14 units (2 BWRs &12 PHWRs) *2770 MWe*

Under construction

9 units (6 PHWRs, 2 LWRs, 1 PFBR) *4460 MWe*

Projects to be taken up next

700 MWe PHWR Units

300 MWe AHWR Units

In general, the programme has been maintaining continuity and so have been the regulatory process and licensing requirements.

Safety requirements invariably get progressively enhanced/ updated based on the regulatory reviews, prevailing codes & guides and national and international experiences and inputs.

Requirements For New PHWRS

- *Acceptable safety as per prevailing requirements*
- *Competitive unit energy cost*

  (Construction period; plant life)
- *Simplification – design, operation, construction*
- *Compatibility with available fuel resources*

  - Energy security issues
- *Environmental friendliness – minimum waste generation.*
- *Amenability to decommissioning*
- *Security*

International Pointers

Regulatory Reqts for Next NPPs **(Firm)**

- *CANDU 6 - latest versions*
- *IAEA Design Code NS-R-1*

Longer- Term Trends **(Proposals)**

- *ACR 700*
- *USNRC*

Acceptable Safety

- Operational Safety – Personnel
  – Public
- Accidents
  – Prevent accidents
  – Intercept potential accidents
  – Mitigate accidents – DBAs
  – BDBAs/Severe Accidents

Emphasis is on <u>prevention</u>

Future Directions For PHWR Safety

- *Evolutionary Approach : Progressive improvements*

- *Fine-tuning of existing Design/Operations based on*
  - *Operating experience feedback*
  - *PSA insights*
  - *System wise reviews*

  } *Reduce CDF*

- *Additional considerations for severe accidents (prevention & mitigation)*

Safety In Routine Operations

- *Man-Rem Reduction*
  - *Maintainability – Layout*
    – Mechanical Handling Equipment
  - *Tritium in PHTS (Tritium stripping in up graders)*
  - *Minimise D_2O circuit leaks – Quality components*
  - *Materials*
  - *DAC – Review Dryer capacity etc.*
  - *Allow maintenance outage of circuits/parts of circuits, eg. Process water with minimum waiting period*
- *Design to meet surveillance requirements*
  - *Consider 2-yr between outages*
  - *No impact on operations*
  - *Automated testing & logging of results*
- *Routine Discharges* → *ALARA*

Accidents : Prevention/ Interception

- *Rigorous application of existing safety design principles:*
  - *Proven/ tested designs*
  - *Redundancy, diversity, independence, failsafe*
  - *Two SDS with double trip coverage (two group concept)*
- *Simplicity* → *Design, Operation*
- *Human factors (more operator-proof designs)*
  - *Prevent operator actions to block safety action in short term*
  - *Optimise CR displays*

Accidents : Prevention/ Interception (contd.)

- *Robust margins – Inventories/Thermal inertia*
  - *Pressurizer*
  - *SG inventory*
  - *SG makeup sources*
- *Redundancy/Diversity for SG feed/makeup incl. power supplies*
- *Diagnostic Monitoring-Increased use of new techniques for Rotating equipment, valves, high-pressure systems*
- *Design against fuel string ejection accidents*
  - *End fitting ejection : Examine end fitting restraints*
  - *Seal plug failure : Shield plug as backup?*

    (examine rolled joint between end fitting and liner tube)

Accidents : Mitigation

- *Lower moderator temperature*
  - *Limit on outlet temperature*
  - *Optimise location of calandria inlet/outlet*
- *ECCS simplifications/improvement*
  - *Ball seals at bottom of tank*
  - *AHWR accumulator?*

Containment:

- *Need for suppression pool under review*
- *Containment Clean-up – Filters vs. Spray*
- *Water inventory (alternate for suppression pool)*
- *Primary & secondary containment isolation systems as two systems*
- *Airlocks simplification*
- *Severe accident capability*
  - *Hydrogen control*
  - *Ultimate load bearing capability*
  - *Decay heat removal*

Severe Accident : Prevention/ Mitigation

- *Conservatism/Margins in design for DBE's to cater for BDBE's*
- *Assess selected BDBE's for*
  - *Emergency Planning*
  - *Accident Management*
  - *Need for additional plant features (cost-effective) for core debris coolability and containment integrity*
- *PSA : CDF Target : 10^{-5} per reactor year*
- *Hydrogen control – Avoid detonation*

Severe Accident : Prevention/Mitigation (Contd.)

- *Makeup water to :*
  - *SG's (at low pressure)*
  - *Moderator (to prevent severe core damage)*
  - *Calandria vault (to mitigate severe core damage)*

  This makeup should be from sources independent of normal station electric & water supplies: could be from firewater pumping systems or large overhead pool
- *Decay heat removal/recirculation for above makeups into containment*

Others: Life Management Related

- *Amenability to ISI with minimum man-rem*
- *Minimum 60 years life*
- *Amenability to EMCCR*

Spent fuel storage – Space availability for future contingencies

Licensing Of New Power Plants

700 MWe Project – Salient Safety Enhancements

Overall Plant Layout

700MWe Plant Layout

Design criteria:

- *Compact for operational ease*
- *Cost effectiveness with minimum tunnels & trenches*
- *Different approach for turbine missile*

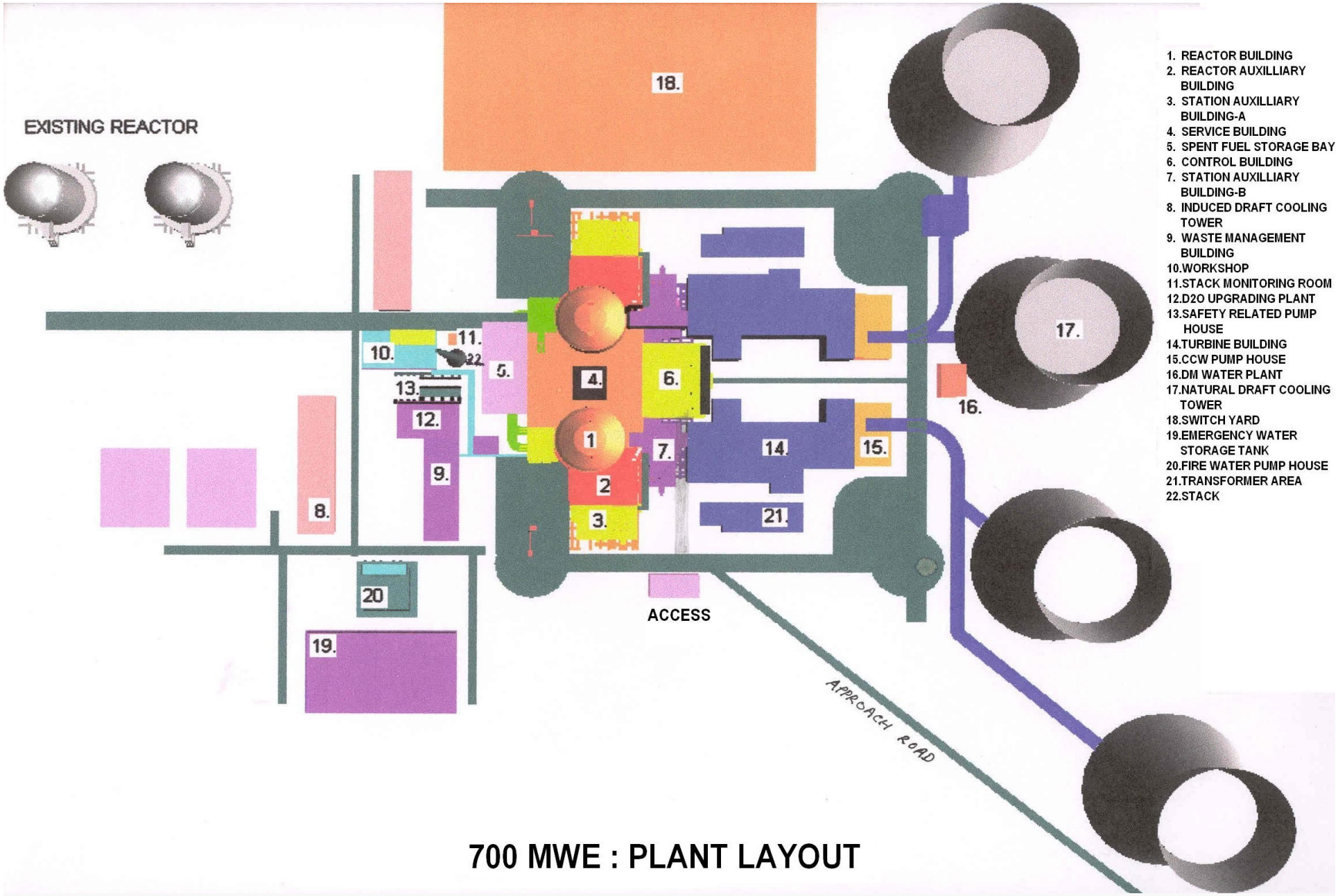

700 MWE : PLANT LAYOUT

Plant Design Overview

Reactor core parameters

	700MWe	TAPP-3,4
Fission power	: 2285 MW	: (1825)
Power to coolant	: 2166 MW	: (1730)
Maximum channel power	: 6.5 MW	: (5.5)
No. of Channels-	: 392	: (same)
No of fuel elements per bundle	: 37	: (same)
Pressure Tube Design Temperature	: 315 ^{o}C	: (310)
Pressure Tube Des. Pressure -	: 113.08kg/cm2(g)@315 ^{o}C	
	123.03kg/cm2(g)@275°	: Same)
Pressure Tube ID	: 103.04 mm	: (same)
Pressure Tube Thickness -	: 4.3 mm	: (same)

700 MWe vis-a-vis 540 MWe (TAPP3,4) System

700 MWe Systems:	***Changes over 540 MWe:***
PHT	***Higher temp + Boiling***
	Boiling beyond ~83-89% power
	Feeder redesign (higher size outlet feeder)

700 MWe vis-a-vis 540 MWe (TAPP3,4) System(continued)

700 MWe Systems:	*Changes over 540 MWe:*
• *Reactor Core*	*Hardware essentially same*
• *Reactor Physics & Power*	*1. Higher utilisation of 37-element fuel bundle rating.* *2. Higher thermal power (2166 Mwt to coolant).* *3. Core void effect.*

Passive Decay Heat Removal System (PDHRS)

PDHRS - Functions

- *To ensure continued availability and recirculation of the inventory on the secondary side of the Steam Generators.*
- *Provision of water for suction to the ECCS pumps*
- *Suction for RB spray system*
- *Injection into the calandria (Moderator) for BDB Event*

PDHRS – Salient Design Features

- Four PDHRS tanks of 200 m3 capacity – one for each steam generator
- Horizontal u-tube condenser bundle
- Shell side holdup sufficient to give decay heat removal for >8 hours considering boil-off & no make up
- With make up - heat removal can be continued indefinitely
- Basis for U-bundle sizing – 2% FP & 100ºC on shell side
- Steam inlet & condensate lines sized to give minimal pressure drop ~ 2 mWC

PDHRS – Perspective view

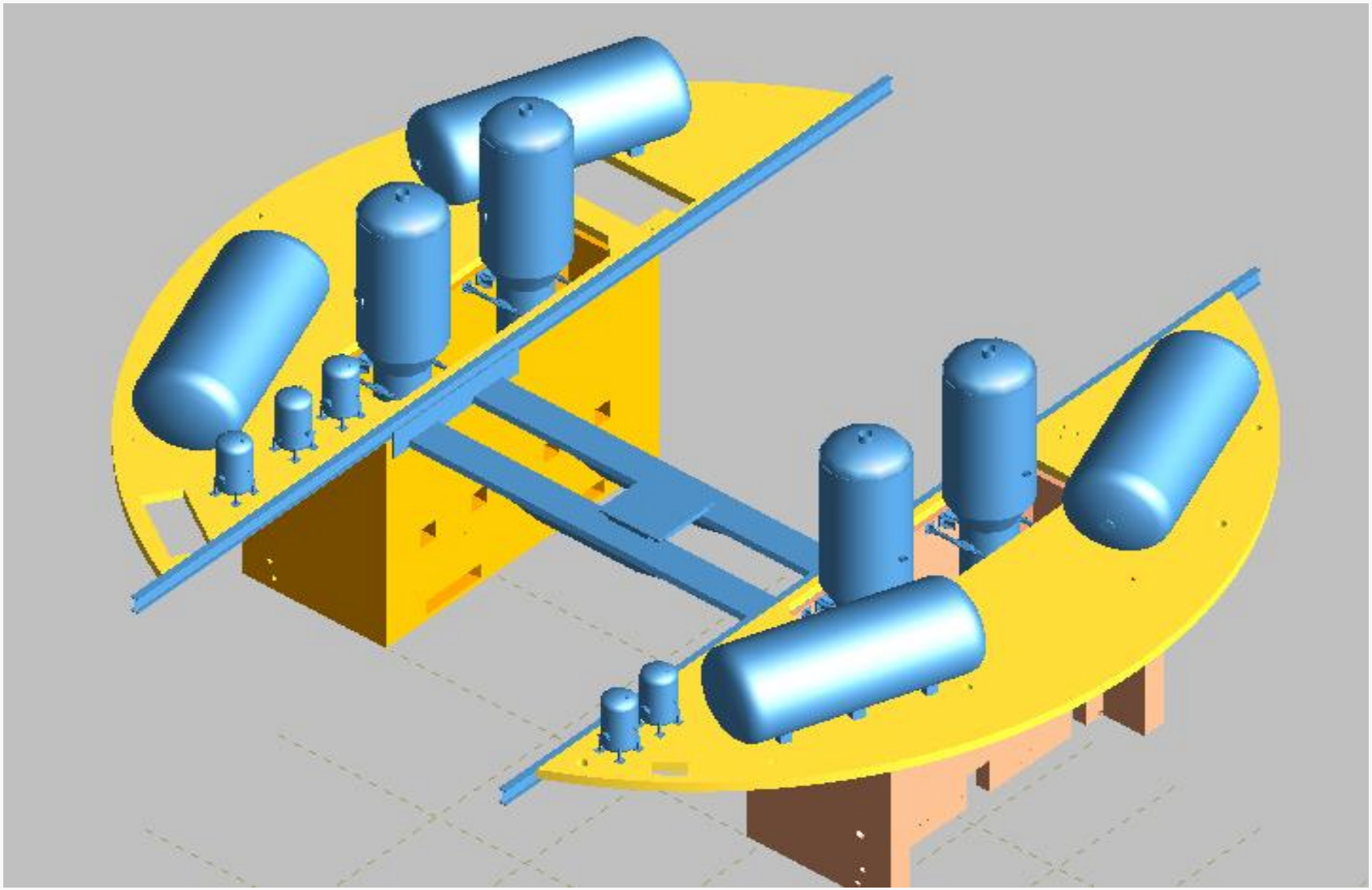

PDHRS - Advantages

- *Passive system for continued core decay heat removal which will prolong inventory preservation in steam generator*
- *Make up by diesel driven pumps of low head provide diversity of supply*
- *This decay heat removal concept is a well proven concept in BWRs (e.g. TAPS) thus no extra efforts in developmental work.*
- *Multipurpose system – further economy*

Man-rem Reduction Measures

Salient Approaches For Man-rem Reduction In 700MWe Project

- *Better equipment handling*
- *Decongested layouts*
- *Feedback of earlier units – Improvements in systems/equipments*
- *Minimise welds & ISI requirements*
- *Shielding improvements*

Improved Pump room layout – plan view

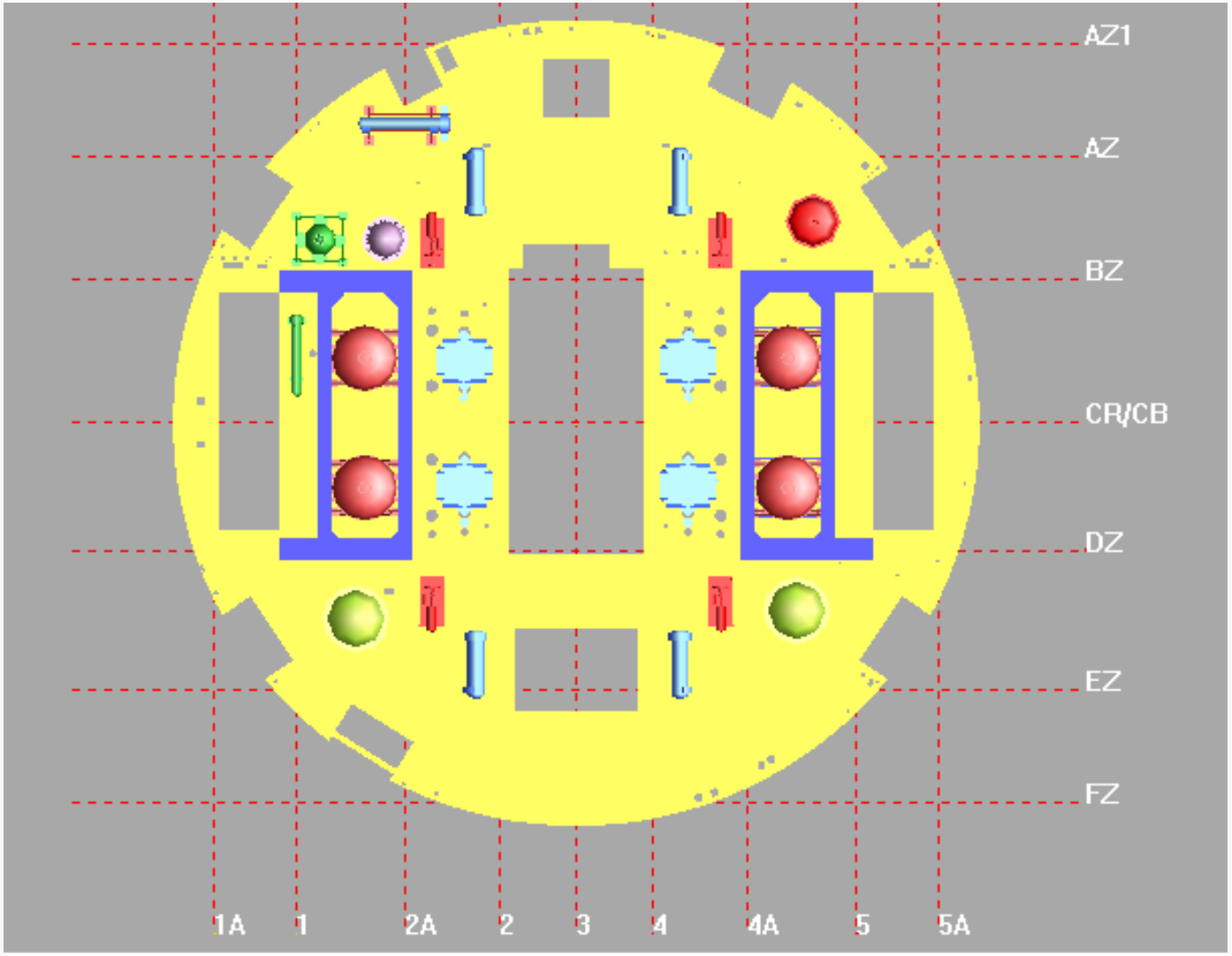

Improved pump room layout – perspective view

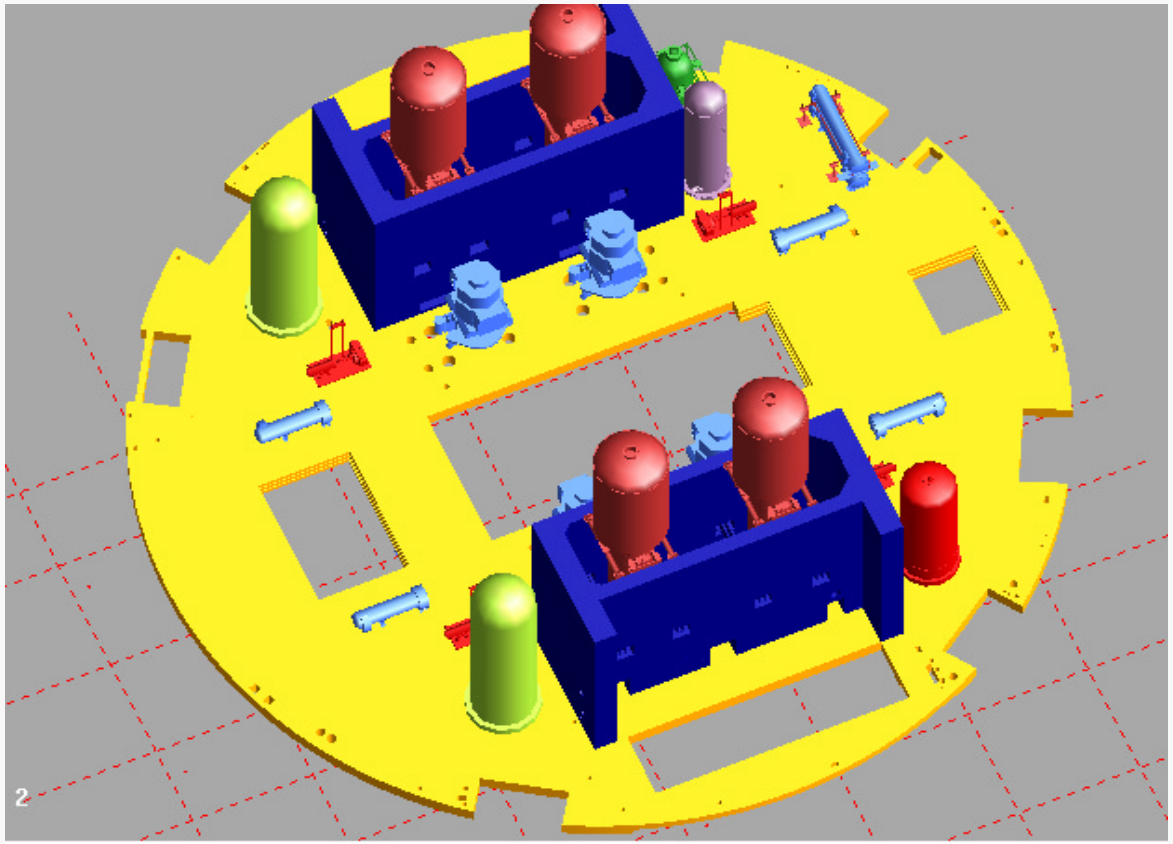

Concept of Single Overhead crane for wider coverage & better handling of equipments

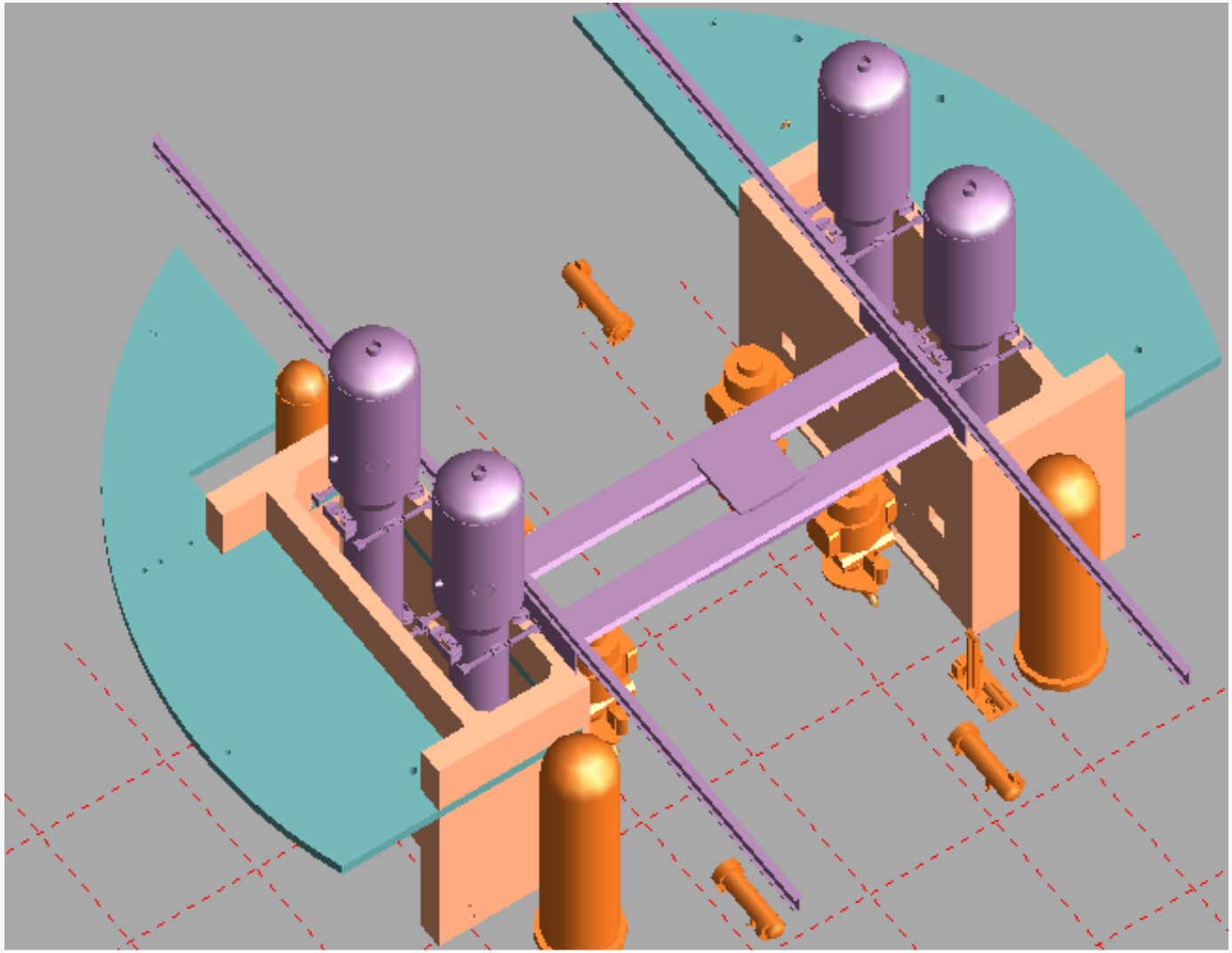

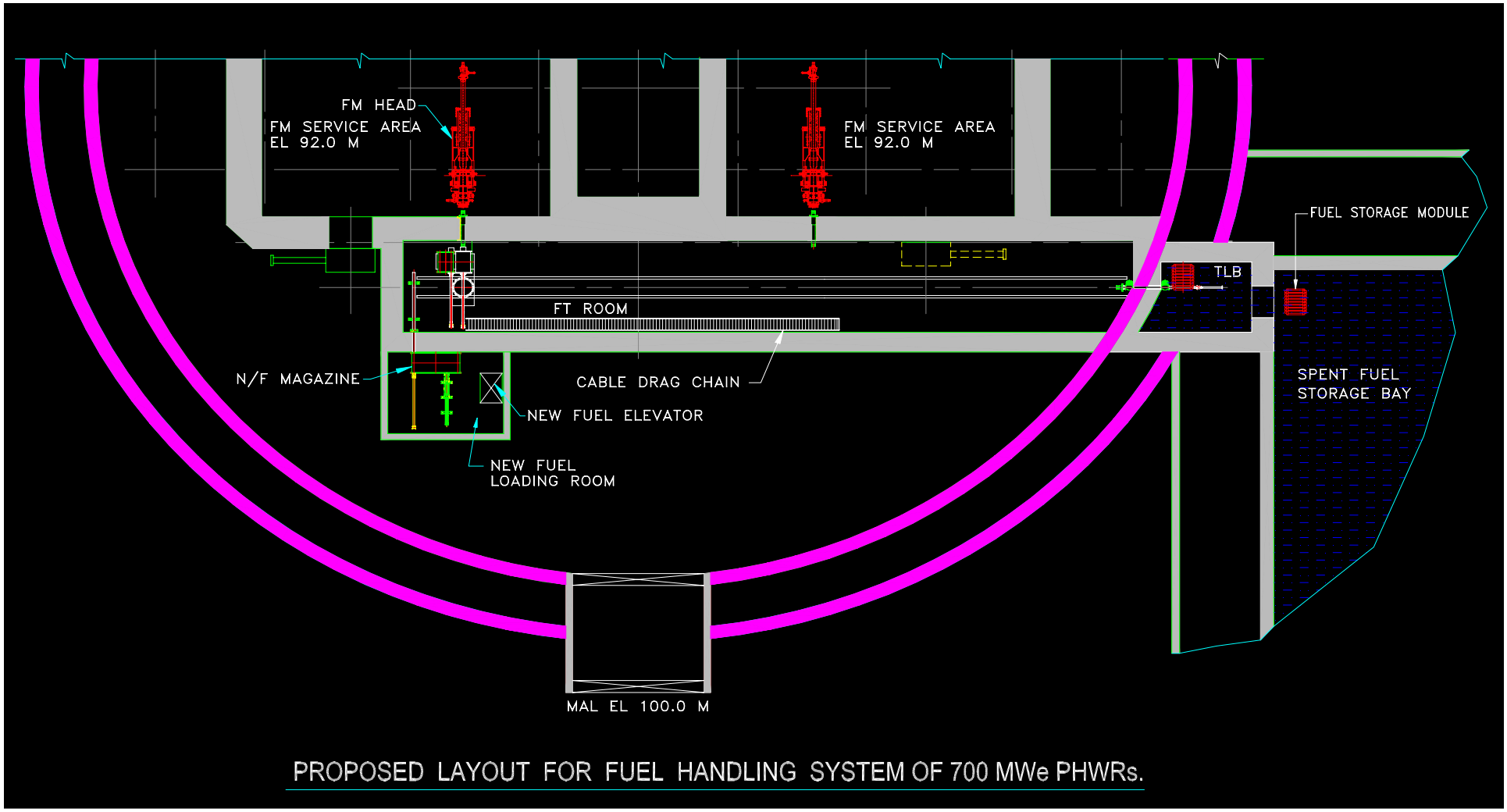

PROPOSED LAYOUT FOR FUEL HANDLING SYSTEM OF 700 MWe PHWRs.

- ***FM service area located below FM vault.***
- ***Dry transfer of fuel between FM and mobile transfer machine.***
- ***Automated loading of fuel in spent fuel building.***

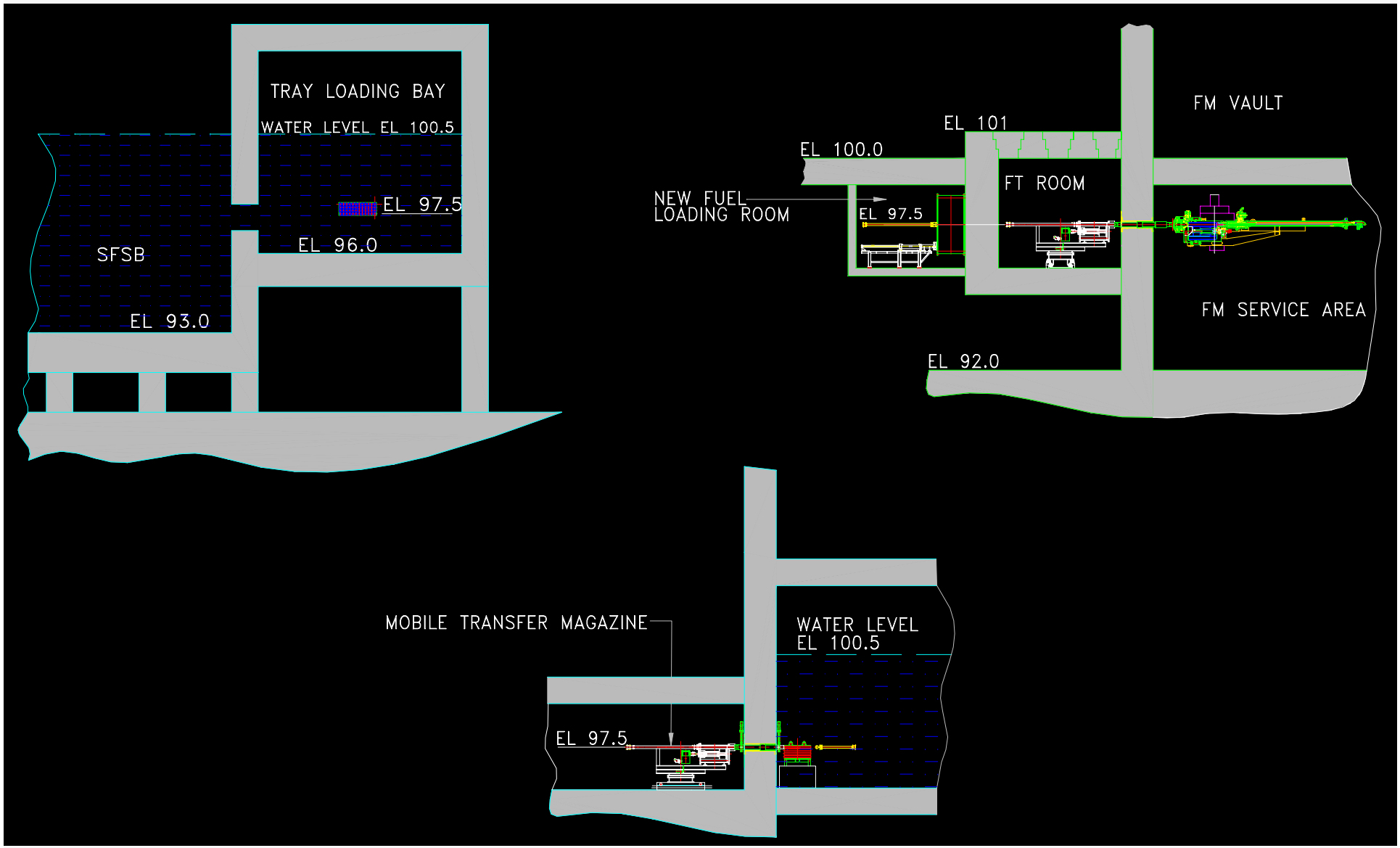
TRAY LOADING BAY
WATER LEVEL EL 100.5
EL 97.5
EL 96.0
SFSB
EL 93.0
EL 101
EL 100.0
FM VAULT
FT ROOM
NEW FUEL
LOADING ROOM
EL 97.5
FM SERVICE AREA
EL 92.0
MOBILE TRANSFER MAGAZINE
WATER LEVEL
EL 100.5
EL 97.5

Avoid Hydrogen Pockets

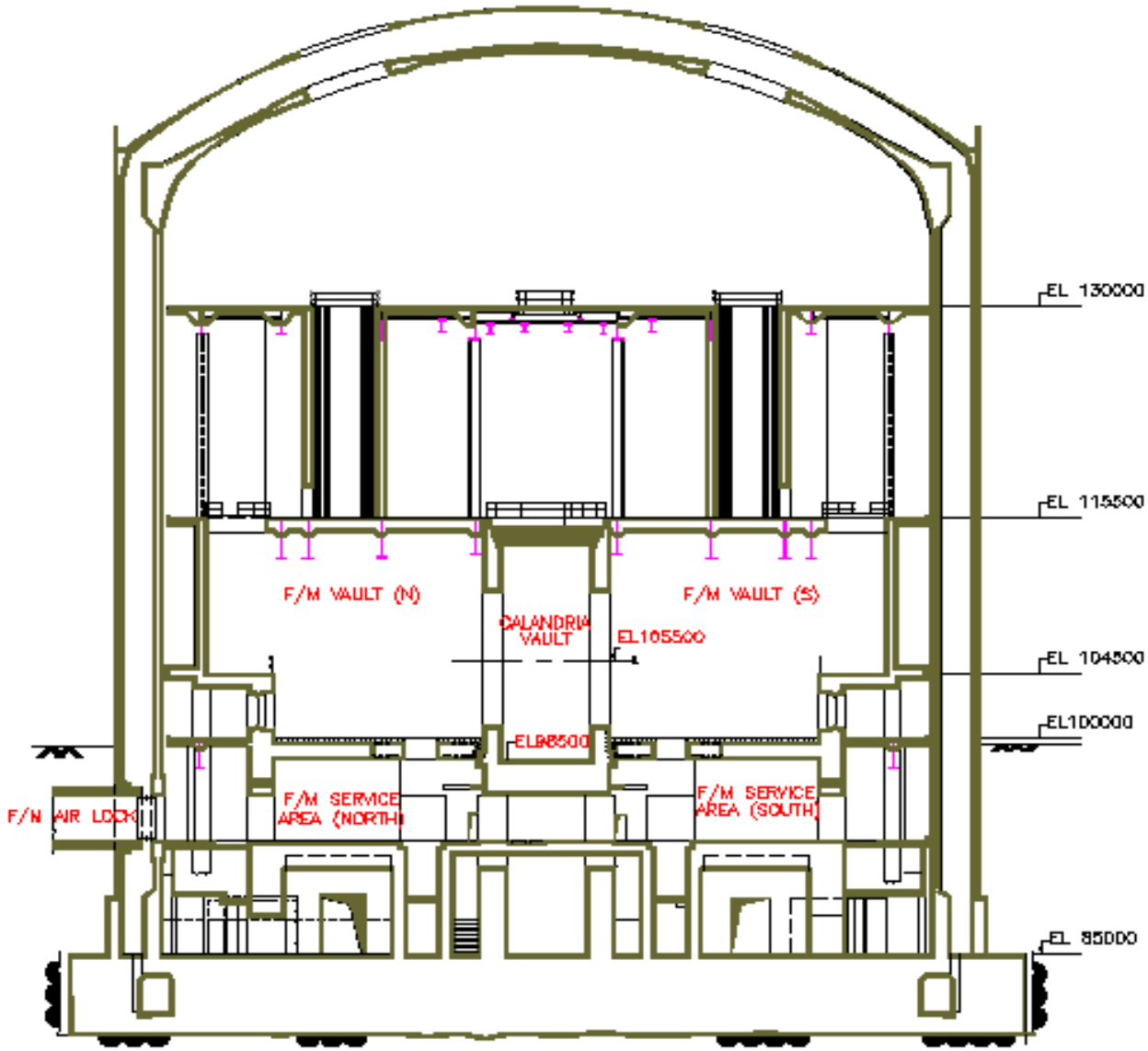

REACTOR BUILDING OF 540MWe PHWR

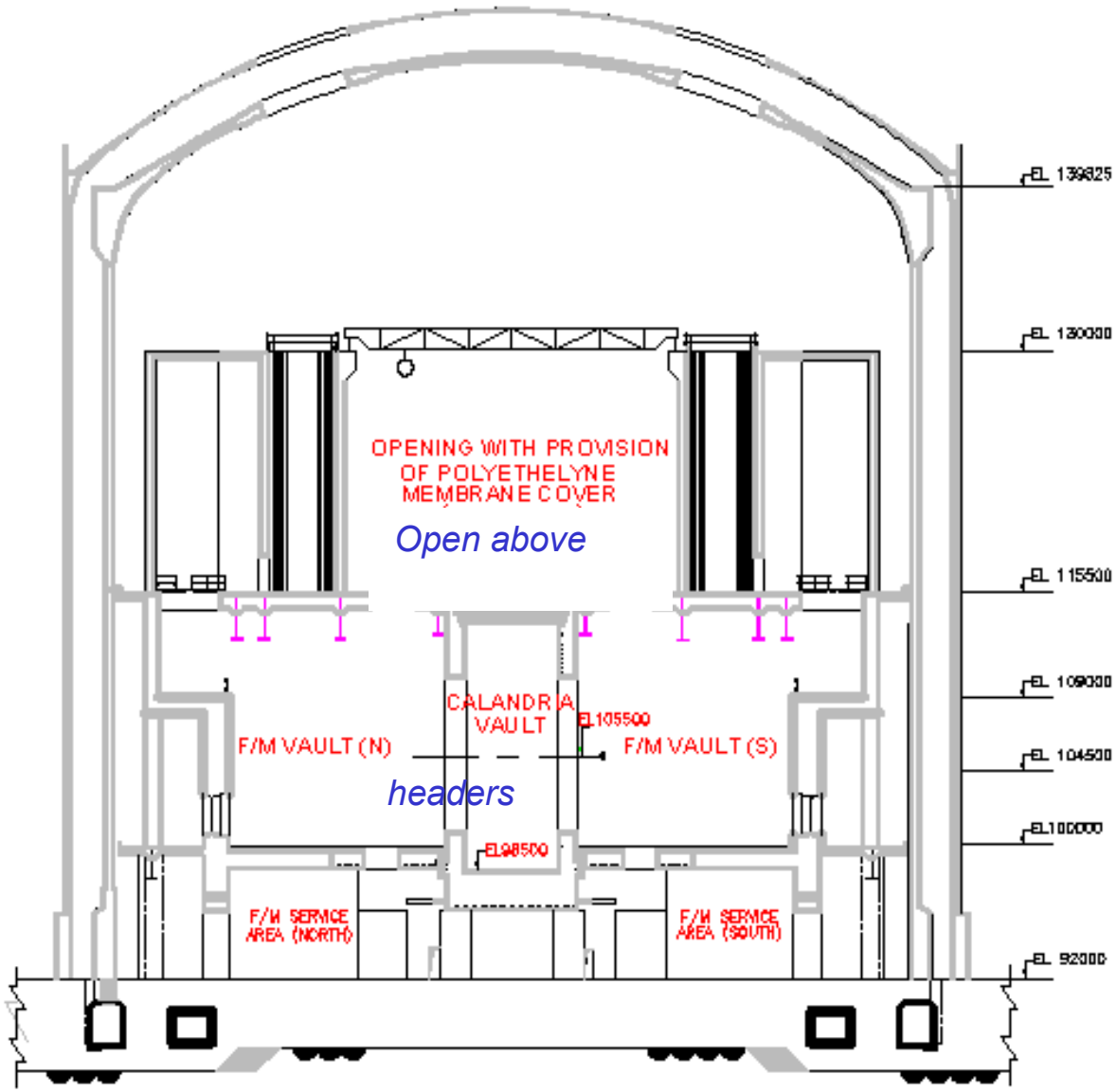

REACTOR BUILDING OF 700MWe PHWR

Main Steam Line Break (MSLB) Scenario

Concept of two steam lines per steam generator

- *Effect of two steam lines on MSLB scenario is being analyzed to arrive at optimal design to optimize building pressure*
- *Steam lines to have same velocities as 540 MWe*
- *600 mmNB vs 2x~400mmNB*

Conceptual Design of two steam lines per SG – Perspective view

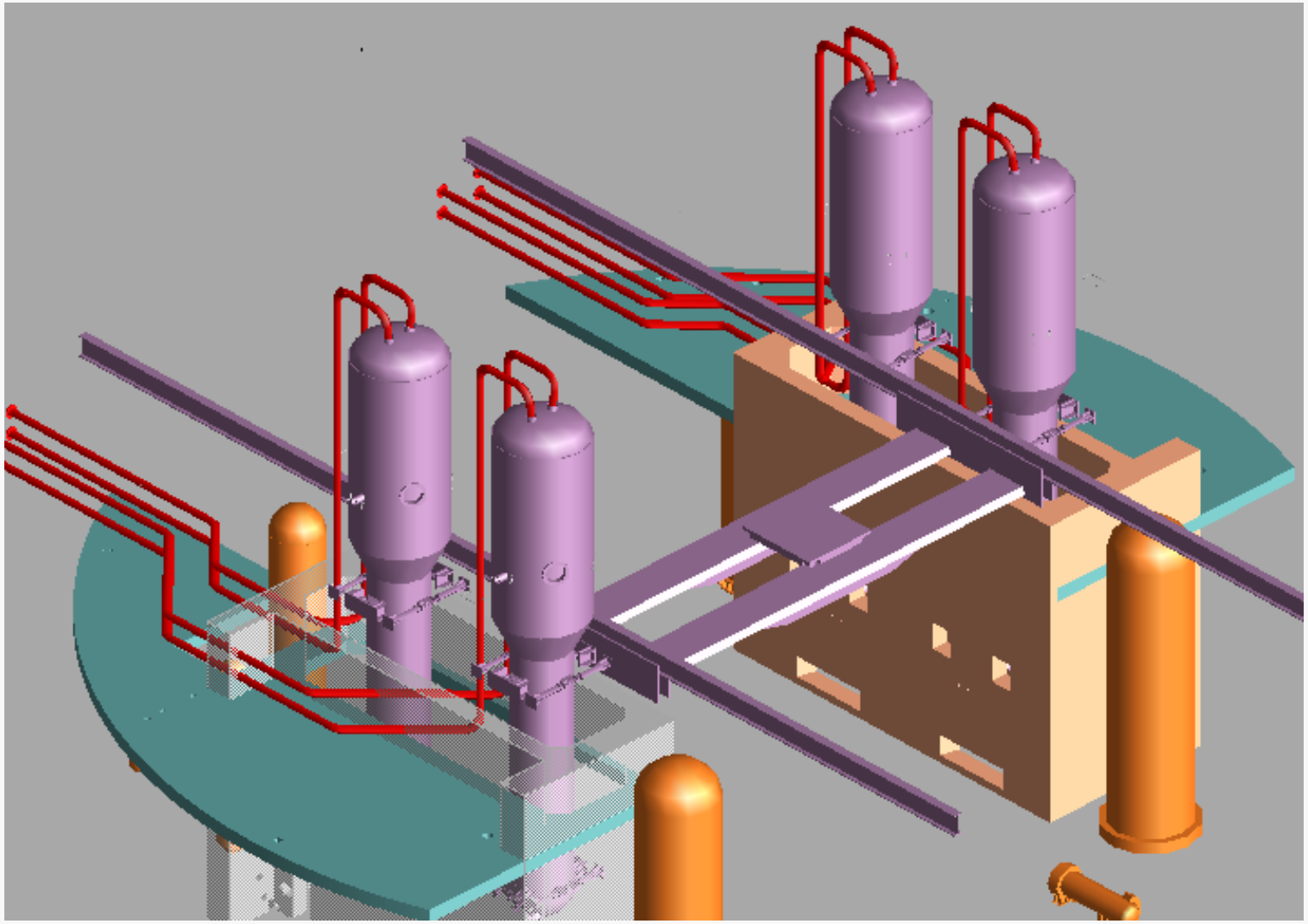

Primary Containment Related

Salient Changes

- *Deletion of suppression pool*
- *Introduction of spray system*
- *RB with ECCS sump*
- *Changes in air locks*
- *Minimize penetration EP's & better EP design*

Status

- *PSAR under pre-licensing review by AERB*
- *Specific areas of difference between 540 MWe and 700 MWe, under discussion. Important amongst these are:*
  - *Reactor control system with boiling adopted in coolant*
  - *Possibility of flow instability in parallel flow with boiling in coolant channels*

AERB will take up formal review of 700 MWe design after successful commissioning of first unit of 540 MWe

Conclusion

Cost effective design with safety enhancements and better performance is being evolved for 700 MWe Project.

THANK YOU