SMUD
SACRAMENTO MUNICIPAL UTILITY DISTRICT □ 6201 S Street, P.O. Box 15830, Sacramento CA 95852-1830, (916) 452-3211
AN ELECTRIC SYSTEM SERVING THE HEART OF CALIFORNIA

MPC&D 04-063

July 29, 2004

U.S. Nuclear Regulatory Commission
Attn.: Document Control Desk
Washington, DC 20555

Docket No.72-11
Rancho Seco Independent Spent Fuel Storage Installation
License No. SNM-2510

RANCHO SECO INDEPENDENT SPENT FUEL STORAGE INSTALLATION PROPOSED LICENSE AMENDMENT NO. 2 FOR THE STORAGE OF GREATER THAN CLASS C WASTE

Attention: Randy Hall

In accordance with 10 CFR 72.56 "Application for Amendment of License," we are submitting Proposed Amendment No. 2 to the License for the Rancho Seco Independent Spent Fuel Storage Installation (ISFSI) to allow for the storage of Greater than Class C (GTCC) Waste at the Rancho Seco ISFSI.

Attachment 1 to this letter provides a copy of the proposed amendment to page 1 of 2 of the License. This page will replace the existing page 1 of 2. Attachment 2 is the safety analysis and will become Appendix C to the ISFSI Final Safety Analysis Report (FSAR). Appendix C follows the same format as Volume I of the ISFSI FSAR and will become part of the FSAR.

The GTCC waste container will contain solid reactor-related waste only, consisting of activated reactor vessel internals and in-core instrumentation. There will be no process or liquid GTCC waste stored at the Rancho Seco ISFSI.

The external characteristics of the GTCC canister are functionally identical to those of the fuel canisters. Once the GTCC waste is loaded into the canister, the operational steps to drain, seal and transfer the GTCC canister to the ISFSI are essentially identical to those of the fuel canister except that the GTCC canister loading and processing operations will be conducted in the Reactor Building as opposed to the Spent Fuel Building.

To the extent possible, we will use the same procedures and individuals with the same training and qualifications as those used in spent fuel transfer operations. The

NMSS01

organization, programs, and protective measures in place to ensure safe storage of the spent nuclear fuel will remain in place to ensure continued safe storage of the fuel and the GTCC waste.

Storage of GTCC waste at the Rancho Seco ISFSI will have no adverse affect on the safe storage of the spent fuel and the safe operation of the ISFSI. The storage of the GTCC waste will have no adverse affect on public health and safety or the environment.

We have also sent a copy of this proposed amendment to the Radiological Health Branch of the California State Department of Health Services. If you, or members of your staff, have questions requiring additional information or clarification, please contact Bob Jones at (916) 732-4843.

Sincerely,

Steve Redeker
Manager, Plant Closure & Decommissioning

Cc: Randy Hall, NRC Headquarters
NRC, Region IV
Radiological Health Branch of the California State Department of Health Services

Attachments

CALIFORNIA ALL-PURPOSE ACKNOWLEDGMENT

State of California
County of Sacramento } ss.

On July 29, 2004 (Date) before me, Rachel R. Moore (Name and Title of Officer (e.g., "Jane Doe, Notary Public")),
personally appeared Steven James Redeker (Name(s) of Signer(s)),

☐ personally known to me
☒ proved to me on the basis of satisfactory evidence

RACHEL R. MOORE
Commission # 1474724
Notary Public - California
Sacramento County
My Comm. Expires Mar 6, 2008

to be the person(s) whose name(s) is/are subscribed to the within instrument and acknowledged to me that he/she/they executed the same in his/her/their authorized capacity(ies), and that by his/her/their signature(s) on the instrument the person(s), or the entity upon behalf of which the person(s) acted, executed the instrument.

WITNESS my hand and official seal.

Rachel R. Moore
Signature of Notary Public

OPTIONAL

Though the information below is not required by law, it may prove valuable to persons relying on the document and could prevent fraudulent removal and reattachment of this form to another document.

Description of Attached Document

Title or Type of Document: _____

Document Date: _____ Number of Pages: _____

Signer(s) Other Than Named Above: _____

Capacity(ies) Claimed by Signer

Signer's Name: _____

☐ Individual
☐ Corporate Officer — Title(s): _____
☐ Partner — ☐ Limited ☐ General
☐ Attorney-in-Fact
☐ Trustee
☐ Guardian or Conservator
☐ Other: _____

Signer Is Representing: _____

RIGHT THUMBPRINT OF SIGNER
Top of thumb here

© 1999 National Notary Association • 9350 De Soto Ave., P.O. Box 2402 • Chatsworth, CA 91313-2402 • www.nationalnotary.org Prod. No. 5907 Reorder: Call Toll-Free 1-800-876-6827

RACHEL R. MOORE
Commission # 1474724
Notary Public - California
Sacramento County
My Comm. Expires Mar 6, 2008

Attachment 1

Revised License page 1 of 2

LICENSE FOR INDEPENDENT STORAGE OF SPENT NUCLEAR FUEL AND HIGH-LEVEL RADIOACTIVE WASTE

Pursuant to the Atomic Energy Act of 1954, as amended, the Energy Reorganization Act of 1974 (Public Law 93-438), and Title 10, Code of Federal Regulations, Chapter I, Part 72, and in reliance on statements and representations heretofore made by the licensee, a license is hereby issued authorizing the licensee to receive, acquire, and possess the power reactor spent fuel and other radioactive materials associated with spent fuel storage designated below; to use such material for the purpose(s) and at the place(s) designated below; and to deliver or transfer such material to persons authorized to receive it in accordance with the regulations of the applicable Part(s). This license shall be deemed to contain the conditions specified in Section 183 of the Atomic Energy Act of 1954, as amended, and is subject to all applicable rules, regulations, and orders of the Nuclear Regulatory Commission now or hereafter in effect and to any conditions specified herein.

Licensee	
1. Sacramento Municipal Utility District	3. License Number SNM-2510
2. Rancho Seco Nuclear Generating Station 14440 Twin Cities Road Herald, California 95638	4. Expiration Date June 30, 2020
	5. Docket or Reference No. 72-11

6. Byproduct, Source, and/or Special Nuclear Material	7. Chemical and/or Physical Form	8. Maximum Amount that Licensee May Possess at Any One Time Under This License
A. Spent fuel from Rancho Seco Nuclear Generating Station and associated fuel assembly control components and radioactive materials related to the receipt, storage, and transfer of the fuel assemblies.	A. Spent fuel assemblies and damaged fuel assemblies as UO_2 clad with Zircaloy-4.	A. 228.8 MTU of intact spent fuel assemblies and damaged fuel assemblies.
B. Solid Greater Than Class C Waste from Rancho Seco Nuclear Generating Station.		

9. Authorized Use: For use in accordance with statements, representations, and the conditions of the Technical Specifications and Rancho Seco ISFSI Safety Analysis Report (SAR) dated October 4, 1991, as revised or supplemented on October 27, 1993; January 28, May 28, and November 24, 1999; and February 24 and March 2, 2000.

The material identified in 6.A and 7.A above is authorized for receipt, possession, storage, and transfer. Storage is authorized only in Horizontal Storage Modules of the NUHOMS design as described in the SAR.

Attachment 2

Appendix C to the Rancho Seco ISFSI FSAR

Rancho Seco

Independent Spent Fuel Storage Installation

Final Safety Analysis Report
Appendix C
Greater Than Class C (GTCC) Waste Canister

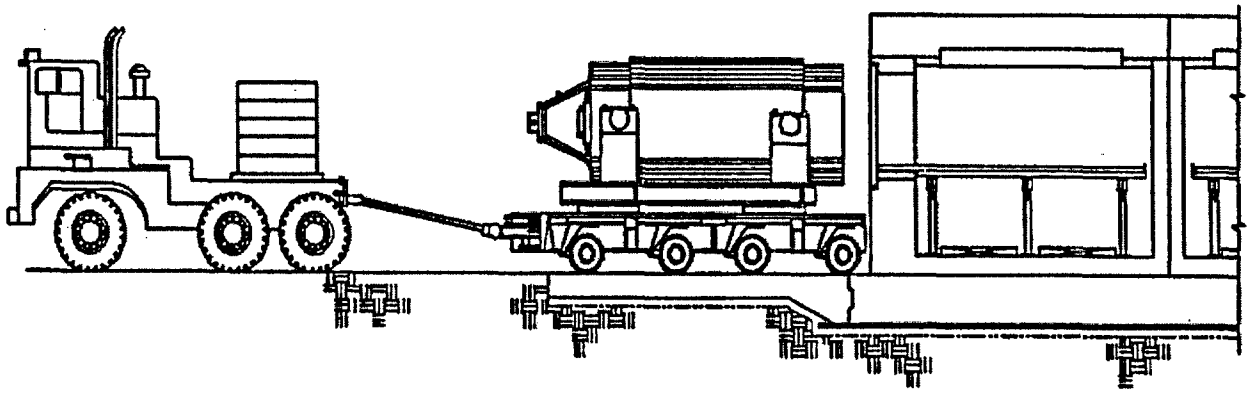

SMUD
Sacramento Municipal Utility District

TABLE OF CONTENTS

1	Introduction and General Description of Installation		
	1.1	Introduction	1-1
	1.2	General Description of the Installation	1-1
	1.3	General Systems Description	1-2
	1.4	Identification of Agents and Contractors	1-2
	1.5	Material Incorporated by Reference	1-2
	1.6	References	1-2
2	Site and Environment		2-1
3	Principal Design Criteria		
	3.1	Purpose of installation	3-1
	3.2	Structural and Mechanical Safety Criteria	3-2
	3.3	Safety Protection System	3-3
	3.4	Decommissioning Considerations	3-4
	3.5	Summary of ISFSI Design Criteria	3-5
	3.6	References	3-5
4	Installation Design		
	4.1	Summary Description	4-1
	4.2	Storage Structures	4-1
	4.3	Decontamination System	4-4
	4.4	Repair and Maintenance	4-4
	4.5	Cathodic Protection	4-5
	4.6	Waste Handling Operation Systems	4-5
	4.7	References	4-6
5	Operation Systems		
	5.1	Operation Description	5-1
	5.2	GTCC Waste Handling Systems	5-2
6	Waste Confinement and Management		
	6.1	Waste Sources	6-1
	6.2	Off-gas Treatment and Ventilation	6-1
	6.3	Liquid Waste Treatment and Retention	6-1
	6.4	Solid Wastes	6-1
	6.5	Radiological Impact of Norma Operations-Summary	6-1

7 Radiation Protection
7.1 Ensuring that Occupational Radiation Exposures Are As Low As is Reasonably Achievable (ALARA) 7-1
7.2 Radiation Sources 7-1
7.3 Radiation Protection Design Features 7-1
7.4 Estimated Onsite Collective Dose Assessment 7-3
7.5 Health Physics Program 7-3
7.6 Estimated Offsite Collective Dose Assessment 7-3
7.7 References 7-5

8 Analysis of Design Events
8.1 Normal and Off-Normal Operations 8-1
8.2 Accident Analyses for the ISFSI 8-1

9 Conduct of Operations
9.1 Organizational Structures 9-1
9.2 Pre-Operational Testing and Operation 9-1
9.3 Training Program 9-1
9.4 Normal Operations 9-2
9.5 Emergency Planning 9-2
9.6 Decommissioning Plan 9-2

10 Operating Controls and Limits
10.1 Proposed Operating Controls and Limits 10-1
10.2 Development of Operating Controls and Limits 10-1
10.3 Operating Control and Limit Specifications 10-2

11 Quality Assurance 11-1

1. INTRODUCTION AND GENERAL DESCRIPTION OF INSTALLATION

1.1 Introduction

Consistent with Rancho Seco PSDAR, the Independent Spent Fuel Storage Installation (ISFSI) is intended to provide dry storage capacity for RSNGS spent fuel and Greater Than Class C (GTCC) waste. This Appendix describes GTCC waste storage in Horizontal Storage Modules (HSMs) at the Rancho Seco ISFSI. An overview of the ISFSI and the HSMs is provided in ISFSI FSAR Volumes I and II.

The GTCC waste container will contain solid reactor-related waste only, consisting of activated reactor vessel internals and other in-core instrumentation. There will be no liquid or process GTCC waste stored at the Rancho Seco ISFSI.

With the exception to lacking the anti-rotation key on the fuel DSCs, the external characteristics of the GTCC canister are identical to those of the fuel canisters. To the extent possible, the same procedures and individuals with the same training and qualifications as those used in spent fuel transfer operations will be used. The organization, programs, and protective measures in place to ensure safe storage of the spent nuclear fuel will remain in place to ensure continued safe storage of the fuel and the GTCC waste.

Storage of GTCC waste at the Rancho Seco ISFSI will have no adverse affect on the safe storage of the spent fuel and safe operation of the ISFSI. The storage of the GTCC waste will have no adverse affect on public health and safety or the environment.

1.1.1 Principal Function of the Installation

In addition to the storage of spent fuel assemblies, the Rancho Seco ISFSI design provides temporary dry storage for 100% of the RSNGS GTCC waste to facilitate decommissioning of the Reactor Building. The ISFSI is designed for dry transfer operations. The GTCC waste will be stored at the ISFSI until the Department of Energy (DOE) accepts the GTCC waste.

1.2 General Description of the Installation

A general description of the installation is provided in Section 1.2 of Volume I.

1.2.1 GTCC Waste Canister

The GTCC waste canister is a high integrity stainless steel, welded vessel that provides confinement of radioactive materials, encapsulates the waste in an inert atmosphere, and provides biological shielding (in the axial direction) during GTCC canister closure, transfer and storage. It provides full canisterization for the GTCC waste prior to storage in the HSMs. The GTCC waste canister will be stored within the ISFSI boundaries. The design requirements and design description for this canister is provided in Sections 3 and 4 of this appendix. A general overview of the GTCC canister is shown in Figure 1-1.

The external appearance of the Rancho Seco GTCC canister is functionally identical to the FO/FC/FF canister. The internals have been modified to accommodate storage of different waste forms and therefore does not contain spacer discs or guide sleeves.

Quantity	1
External Size	67.25"ϕ x 186"
Shell Thickness (nominal)	1.25"
Approximate Weight, Loaded	81,000 lbs
Internal Atmosphere	Helium
Internal Cavity Length	173"

1.3 General Systems Description

1.3.1 Storage Systems

The Rancho Seco ISFSI Storage System is described in Section 1.3 of Volume I.

1.3.2 Transfer System

The Transfer System is described in Section 1.3.2 of Volume I.

1.3.3 Auxiliary Systems

The vacuum drying, welding, waste processing, and security system are described in Section 1.3.3 of Volume I.

1.4 Identification of Agents and Contractors

The District is responsible for the engineering, design, licensing, and construction of the Rancho Seco ISFSI site as described in Volume I.

1.5 Material Incorporated by Reference

See Volume I for reference to the standardized products.

1.6 References

1.6.1 "Rancho Seco Decommissioning Plan" as approved by NRC Order dated March 20, 1995 (TAC No. M80518), USNRC Docket No. 50-312.

Figure 1-1

Overview of the Greater Than Class C Canister

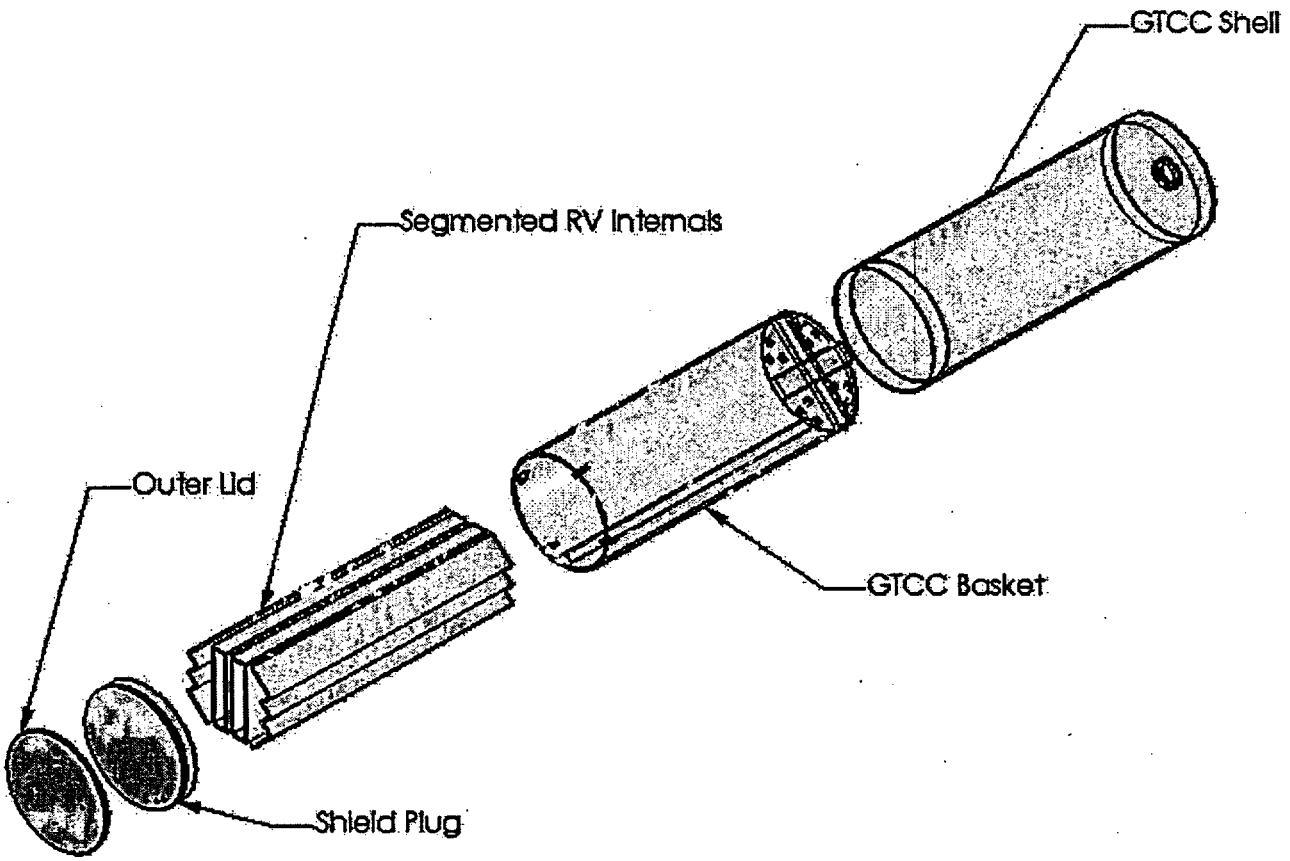

2. SITE AND ENVIRONMENT

Volume I, Section 2 provides a description of the Rancho Seco ISFSI site.

3. PRINCIPAL DESIGN CRITERIA

This Section describes the principal design criteria, which are unique to the GTCC waste storage at the Rancho Seco ISFSI. The design criteria for the ISFSI site are presented in Section 3 of Volume I.

3.1 Purpose of Installation

In addition to the fuel storage, the Rancho Seco ISFSI is designed to provide interim storage for 100% of the RSNGS GTCC waste in the specially designed GTCC canister.

The transfer and storage of GTCC waste and general operating functions at the ISFSI will be similar to that described in Volumes I and II. The existing structures containing the spent fuel assemblies are neither altered nor disturbed during the GTCC waste storage campaign.

3.1.1 Material to be Stored

GTCC waste is non-fuel related material generated as a result of plant operation and decommissioning where the radionuclide concentration limits of 10 CFR 61.55 are exceeded. This waste may include such components as incore components, core support structures, and small reactor related miscellaneous parts resulting from the reactor vessel internals segmentation/decommissioning processes. All waste stored within the GTCC canister will be activated metals, incore instrument tips, and associated surface contamination.

The total amount of GTCC waste to be stored at the ISFSI is approximately 25,000 pounds.

3.1.1.1 Physical Characteristics

The GTCC waste is activated metals and is comprised of core barrel structures, Self Powered Neutron Detector (SPND) segments, and miscellaneous solid waste resulting from the segmentation/decommissioning process.

3.1.1.2 Thermal Characteristics

The GTCC waste to be stored has a calculated decay heat value of approximately 0.725 kW. The Cobalt 60 isotope causes the predominant decay heat load from the GTCC waste. The Rancho Seco activation analysis Reference 3.6.1 provides the total activity as of May 1, 2003. The ISFSI is designed to store the GTCC canister without compromising the heat rejection capacity of the module or of the adjacent fuel modules. The 0.725 kW heat load is minor compared to the 13.5 kW used for the MP-187 cask thermal analysis or the 24 kW heat load for the Standardized NUHOMS®-24P system.

3.1.1.3 Radiological Characteristics

Radiological characterization of the reactor vessel and all vessel internals have been accomplished to support the Rancho Seco decommissioning effort. The results of the characterization study are provided in Reference 3.1.

3.1.2 General Operating Functions

The operating functions related to the GTCC canister is similar to that discussed in Volume 1, Section 3 except that operations will be performed in the Reactor Building rather than the Spent Fuel Building. Each aspect of radiation protection, containment, and heat rejection is accomplished through passive means.

3.2 Structural and Mechanical Safety Criteria

The GTCC canister is a component that is classified as important to safety along with the other components described in Section 3.2 of Volume I.

3.2.1 Seismic Design

The GTCC canister has been analyzed for seismic loading equal to those ground accelerations described in Volume I, Section 3.2.3.

3.2.2 Load Combination Criteria

3.2.2.1 Horizontal Storage Module

The design approach, design criteria and loading combinations for the reinforced concrete HSM and its canister support structure are discussed in Volume II, Section 3.2.5.

3.2.2.2 GTCC Waste Canister

The GTCC canister is designed to withstand the effects of the site characteristics and environmental conditions associated with normal operation, maintenance, and testing of the ISFSI and to withstand postulated off-normal and accident conditions. Environmental conditions are discussed in Section 3.2.5 of Volume I.

3.3 Safety Protection System

3.3.1 General

The Rancho Seco ISFSI is designed for safe containment during GTCC waste storage. Existing components, structures, and equipment, which are designed to assure that this safety objective is met, are summarized in Table 3-11 of Volume I. In addition, the GTCC waste canister is designated as a component important to safety in accordance with the Rancho Seco QA Class 2 classification. The key elements of the ISFSI and its operation which require special design consideration are:

1. Minimizing the contamination of the GTCC exterior while submerged in the segmentation pool.

2. The double closure seal welds on the GTCC canister shell to form a containment boundary and to maintain a helium atmosphere.

3. Minimizing personnel radiation exposure during GTCC loading, closure, and transfer operations.

4. Design of the cask and GTCC canister for postulated accidents.

5. Design of the HSM passive ventilation system for effective decay heat removal to ensure the integrity of the GTCC canister.

3.3.2 Protection by Equipment and Instrumentation Selection

3.3.2.1 Equipment

Handling operations of the GTCC canister are performed similar to those for the fuel canisters except that the Reactor Building Polar Crane is used rather than the Turbine Building Gantry Crane. These operations are performed under the RSNGS 10 CFR Part 50 operating license.

3.3.2.2 Instrumentation

No instrumentation is required for the storage of the GTCC waste canister.

3.3.3 Nuclear Criticality Safety

Nuclear criticality is not applicable to the design of the GTCC waste canister.

3.3.4 Radiological Protection

The Rancho Seco ISFSI is designed to maintain on-site and offsite doses ALARA during transfer operations and long term storage conditions. The storage of GTCC waste will neither alter nor impact the access control, shielding, or radiological alarm systems described in Section 3.3.5 of Volume I.

3.3.5 Fire and Explosion Protection

Fire and Explosion protection is discussed in Section 3.3.6 of Volume I. Storage of GTCC waste does not affect the outcome of this analysis.

3.3.6 Materials Handling and Storage

3.3.6.1 GTCC Waste Handling and Storage

The handling of GTCC waste within the RSNGS is addressed as part of the facility license under 10 CFR Part 50. This includes handling waste canisters and casks using the Reactor Building Polar Crane. The waste canister heat removal and contamination control requirements for the Rancho Seco ISFSI are discussed in Volumes I and II.

3.3.6.2 Radioactive Waste Treatment

The Rancho Seco ISFSI does not generate radioactive waste. Any secondary waste generated during cask loading and decontamination operations in the Reactor Building will be disposed of in accordance with existing RSNGS radioactive waste handling procedures under the 10 CFR Part 50 license.

3.3.6.3 Waste Storage Facilities

Waste storage facilities are neither required nor provided for at the Rancho Seco ISFSI. Existing RSNGS facilities for handling and storage of waste from the Spent Fuel Pool, Reactor Building segmentation pool and dry active wastes as described in Volume I, Section 6, satisfies the requirements for on-site waste storage.

3.3.7 Industrial and Chemical Safety

No hazardous chemicals or chemical reactions are involved in the operation of the Rancho Seco ISFSI. Industrial safety relating to handling of the cask and waste canister are addressed by procedures, which meet Occupational Safety and Health Administration (OSHA) requirements.

3.4 Decommissioning Considerations

Rancho Seco ISFSI decommissioning considerations are discussed in Volume 1 Section 3.

3.5 Summary of ISFSI Design Criteria

The GTCC canister has been designed as a Rancho Seco QA Classification Class 2 Part 71/72 Important to Safety component. For design requirements specific to the DSCs containing spent fuel, see Section 3.6 of Volume 1. For design requirements specific to HSM storage, see Volume II, Section 3.2.

3.6 References

3.6.1 "Rancho Seco Activation Analysis and component characterization: Report 2041-RE-009 Rev. 1. July 2003. WMG Project 2041D.

4. INSTALLATION DESIGN

4.1 Summary Description

The layout and principal features of the ISFSI is described in Section 4.1 of Volume I.

4.2 Storage Structures

The Rancho Seco ISFSI uses the HSMs for storage of fuel DSCs as well at the GTCC canister. All Rancho Seco canisters (fuel and GTCC) have the same exterior dimensions, are functionally identical, and designed to be accepted by the HSMs and cask.

4.2.1 Design Bases and Safety Assurance

The intent of the ISFSI is to provide safe containment during dry storage of spent nuclear fuel and GTCC waste. In accordance with 10 CFR 72.3, the only components at the Rancho Seco ISFSI important to safety are the DSCs, GTCC canister, HSMs, cask, and cask lifting yoke and extensions. These components are self-contained, independent, passive systems and do not rely on any other systems or components for their operation. The cask, GTCC canister, and DSCs rely on other systems during loading, cask handling, and transfer operations; but in storage, the GTCC canister and DSCs are self-contained, independent, and passive.

The following sections discuss the conformance of the Rancho Seco ISFSI with applicable 10 CFR Part 72 design criteria.

4.2.2 Compliance with General Design Criteria

4.2.2.1 10 CFR 72.122 Overall Requirements

1. Quality standards Quality assurance requirements are addressed in Volume I, Section 11.

2. Protection against environmental conditions and natural phenomena Extreme environmental conditions for the ISFSI are defined in Volume I, Section 2. The design criteria require that the storage system be designed to withstand the design earthquake, high ambient temperature and humidity, and extreme winds.

   Lightning protection is provided by lightning rods installed on certain light poles at the ISFSI.

3. Protection against fire and explosion The design criteria require that the storage system be designed so that it can continue to perform its safety functions effectively under credible fire and explosion exposure conditions. As discussed in Volume I, Section 3.3.6, no large fire or explosion within the Rancho Seco ISFSI is considered credible.

4. Sharing of structures, systems, and components The storage system and other ISFSI support systems will not be shared with any other facilities, and ISFSI activities will not impair any activities at RSNGS. The source of backup electrical power to the ISFSI is the emergency diesel generator associated with the Microwave Communications Building.

5. Proximity of sites The design and operation of the ISFSI will result in minimal risk to the health and safety of the public. During the GTCC waste transfer campaign, RSNGS will remain shutdown, as decommissioning activities continue.

6. Testing and maintenance of systems and components The design criteria require that the HSMs be designed to permit inspection, maintenance, and testing. Although the GTCC storage system requires minimum maintenance, the design of the ISFSI will allow for appropriate testing, inspection, and maintenance, if required.

7. Emergency capability Scenarios requiring emergency actions are neither considered credible, nor postulated to occur. Nevertheless, emergency facilities, as described in the RSNGS Emergency Plan would be available, if needed. After the 10 CFR 50 license is terminated, the Rancho Seco ISFSI Emergency Plan will remain in effect to meet the requirements in 10 CFR 72.32.

8. Confinement barriers and systems The design of the storage system will ensure that GTCC waste remains contained within the canister, is protected from degradation during storage and that the waste is maintained in a safe condition.

9. Instrumentation and control systems No control systems are needed for the storage system to perform its safety functions. The parameters that affect the long-term safe storage of spent nuclear fuel are structural integrity of confinement, shielding, and passive cooling (heat rejection). To ensure adequate thermal performance of the ISFSI components, instrumentation is provided to monitor HSM concrete temperature.

10. Control room or control areas The Rancho Seco ISFSI is a passive installation, with no need for operator actions. No control room is needed for normal ISFSI operations; however, the instrumentation used to monitor HSM concrete temperature has readout in the ISFSI Electrical Building, as well as on the Plant Monitoring Computer in the Security Alarm Station.

11. Utility services There are no utility or emergency systems required to perform safety functions at the ISFSI. Volume I, Section 4.3 addresses auxiliary system requirements.

12. Retrievability The design features of the GTCC canister affecting retrievability are functionally identical to those used for the fuel canisters. By using a design similar to that of fuel canisters, the stored waste could be transferred directly to a DOE facility after DOE acceptance of the waste. The steps involved in placing a loaded cask on the transfer trailer and transferring the cask from the trailer to a rail car and preparing it for transport would be identical to those steps covered in the NUHOMS®-MP187 Multi-Purpose Cask Transportation Package Safety Analysis Report, Document No. NUH-05-151 submitted in accordance with 10 CFR Part 71.

4.2.2.2 10 CFR 72.124 - Criteria for Nuclear Criticality Safety

Criticality control is not applicable to the storage of GTCC waste.

4.2.2.3 10 CFR 72.126 Criteria for Radiological Protection

Criteria for radiological protection will not differ from the fuel handling and processing described in Section 4.2.2.3 of Volume I.

4.2.2.4 10 CFR 72.128 Criteria for Spent Fuel, High-level Radioactive Waste, and other Radioactive Waste Handling and Storage

Criteria for waste handling and storage will not differ from the fuel handling and processing described in Section 4.2.2.4 of Volume I.

4.2.2.5 10 CFR 72.130 Criteria for Decommissioning

Operation of the Rancho Seco ISFSI will not result in contamination on the outside surface of the GTCC canister or any other ISFSI components above administrative limits. Decommissioning considerations for the cask are discussed in Volume III, Section 4.6.

4.2.3 Structural Specifications

Safe storage of the GTCC waste depends only on the capability of the storage system to fulfill its design functions. The design criteria for the storage system ensures that its exposure to credible site hazards will not impair their safety function. Refer to Volume I Section 4.2 for a list of the Codes of Construction for the NUHOMS® ISFSI components.

4.2.4 Individual Unit Description

4.2.4.1 Horizontal Storage Module (HSM)

Volume II provides a description of the Rancho Seco ISFSI storage system.

4.2.4.2 GTCC Canister

The Rancho Seco GTCC canister is a high integrity stainless steel, welded vessel which provides confinement of radioactive materials, encapsulate the waste in a helium atmosphere; and together with a cask or HSM, provides biological shielding during canister closure operations, transfer and long term storage. The Rancho Seco GTCC canister is shown in Figure 1-1.

The Rancho Seco GTCC canister is being licensed for transfer and storage. The GTCC canister uses steel shield plugs similar in design to the FO-DSC. The GTCC basket is a perforated metal container designed for staging 100% of Rancho Seco's GTCC waste prior to inserting into the canister.

The auxiliary systems which support the operations associated with the GTCC canister are described in Section 4.3 of Volume I.

4.3 Decontamination System

4.3.1 Equipment Decontamination

No decontamination equipment is required at the ISFSI.

The principal decontamination activity performed in the Reactor Building is the removal of contamination from the outside surfaces of the cask, lifting yoke, extensions, and upper end of the GTCC shell. Such contamination is due to immersion in the refueling canal. To prevent contamination of the GTCC exterior surface and the cask cavity by pool water, the annulus between the GTCC canister and cask is filled with clean demineralized water and an annulus seal inserted as discussed in Volume 1 Section 4. Other aspect of equipment decontamination do not differ from those described in Volumes I and II.

4.3.2 Personnel Decontamination

No personnel decontamination facilities are needed at the ISFSI.

Personnel decontamination will be conducted, if necessary, using existing plant equipment and procedures.

4.4 Repair and Maintenance

4.4.1 Repair

No repair operations are anticipated once the GTCC canister is placed into storage. Periodic maintenance is not required. Maintenance of a minor nature can be performed within the ISFSI area, without the need to move the canister.

4.4.2 Maintenance

Major maintenance operations are not required at the Rancho Seco ISFSI. Storage system design features minimize or eliminate the need for maintenance. The GTCC canister shell is made of corrosion-resistant stainless steel. The GTCC shell internal will be evacuated to eliminate residual water and backfilled with helium.

4.5 Cathodic Protection

The ISFSI is dry and above ground so that cathodic protection in the form of impressed current is not required. The normal operating environment for all metallic components is well above ambient air temperatures so that there is no opportunity for condensation on those surfaces.

The austenitic stainless steel GTCC canister requires no corrosion protection for any foreseeable event. The carbon steel portions of the basket are contained within a sealed, dried, and inert environment backfilled with helium and is not subject to corrosion.

The DSC support structure in the HSM is coated carbon steel and requires no additional protection against the expected environment. The HSM heat shield is galvanized for corrosion protection and is painted on one side to enhance radiative heat transfer.

4.6 Waste Handling Operation Systems

Waste handling operations will be performed with existing Rancho Seco equipment where available. Some specialty equipment may need to be designed and fabricated but will have no effect on the canister shell, and hence does not affect the ISFSI or safe storage of the GTCC waste. Radiation protection of individuals involved in handling spent fuel is addressed in Section 7.

Cask loading will be performed using systems and equipment already used for this or equivalent purposes in the Reactor Building. Since cask loading does not present unique handling procedures, equipment contamination and the need for disposal of contaminated equipment is not expected.

Applicable portions of Cask transfer operations and individual unit descriptions are discussed in Volume I.

4.7 References

4.7.1 Rancho Seco Nuclear Generating Station Emergency Plan, Docket No. 312.

4.7.2 Rancho Seco Nuclear Generating Station Defueled Safety Analysis Report, Docket No. 50-312.

4.7.3 "Safety Analysis Report for the NUHOMS®-MP187 Multi-Purpose Cask," NUH-05-151, Revision 7, Docket 71-9255, Transnuclear West, Inc., August 1998.

5. OPERATION SYSTEMS

Once the GTCC waste is loaded into the GTCC canister, the tasks required to transfer the waste to the Rancho Seco ISFSI are similar to those described in Volume I Section 5.

5.1 Operation Description

The GTCC canister has been designed to be functionally identical to a fuel canister. The only functional difference being the lack of the anti-rotation key placed on the fuel canister adjacent the grapple ring. Existing fuel loading procedures, to the extent possible will therefore be used for processing the waste once it is placed in the GTCC canister. The activities for which operating procedures exist include:

5.1.1 Preparation of the Cask and GTCC canister
Preparation is unchanged except that Cask and canister are placed in the Reactor Building.

5.1.2 GTCC waste Loading
Waste loading is performed in the Reactor Building and does not include fuel, or fuel related items.

5.1.3 Canister Drying
Drying operations for the GTCC waste will be similar to the fuel DSC operations but may take longer due to lack of decay heat. Assisted heating may be employed to expel residual moisture. Vacuum drying and acceptance criteria will remain the same as the fuel criteria.

5.1.4 Canister Backfilling
Helium backfill criteria will remain the same as the fuel criteria.

5.1.5 Canister Sealing Operations
GTCC welding and sealing criteria will remain the same as the fuel DSC

5.1.6 Cask Downending and Transport to ISFSI
Cask downending will be performed in the Reactor Building rather than the Fuel Building. Transportation of the loaded canister to the ISFSI will remain the same as the fuel DSC.

5.1.7 Transferring a GTCC canister into an HSM at the ISFSI
Transfer of the GTCC canister will remain the same as the fuel DSC.

5.2 GTCC Waste Handling Systems

The GTCC waste handling and processing is identical to that described in Volume I Section 5 except that no fuel is contained in the GTCC canister and operations are performed in the Reactor Building rather than the Fuel Building. The remaining handling systems including transfer systems, cask, cask support skid, transport trailer, jack support system, and safety features remain unchanged.

6. WASTE CONFINEMENT AND MANAGEMENT

6.1 Waste Sources

There are no radioactive wastes generated by the storage of GTCC waste at the Rancho Seco ISFSI. The radioactive wastes generated in the Reactor building during canister loading and closure are handled and processed using existing plant facilities and procedures.

6.2 Off-gas Treatment and Ventilation

There is no radioactive off-gas generated by the storage of GTCC waste at the Rancho Seco ISFSI. Potentially contaminated air and helium purged from the canister during evacuation are redirected and processed using plant facilities and procedures.

6.3 Liquid Waste Treatment and Retention

There are no liquid wastes generated by the storage of GTCC waste at the Rancho Seco ISFSI. The contaminated water purged from the canister during closure operations may be drained back to the segmentation pool with no additional processing. A small amount of liquid waste, estimated to be <15 cubic feet, results from decontamination of the transfer cask outer surface following removal from the segmentation pool. Liquid waste will be processed using plant facilities and procedures.

6.4 Solid Wastes

There are no solid wastes generated by the storage of GTCC waste at the Rancho Seco ISFSI. A small quantity of low level solid waste consisting of disposable Anti-C garments, tape, decon clothes, etc., are generated during canister and HSM closure operations. Solid low level wastes are handled and processed using existing plant facilities and procedures.

6.5 Radiological Impact of Normal Operations - Summary

There are no gaseous, liquid effluents or solid wastes generated by the storage of GTCC waste at the Rancho Seco ISFSI. The small volumes of waste generated during GTCC loading and closure will have no significant impact on the ability of existing plant facilities to handle and process them.

7. RADIATION PROTECTION

7.1 Ensuring that Occupational Radiation Exposures Are As Low As Is Reasonably Achievable (ALARA)

The policy and design considerations to maintain exposures ALARA are similar to those discussed in Volume I Section 7.1.

7.2 Radiation Sources

7.2.1 Characterization of Sources

The GTCC radioactive material to be stored in the Rancho Seco ISFSI consists of the RSNGS reactor vessel internal structural components such as baffles and formers, and cut-up sections of incore detector tips. An activation and characterization analysis (Ref. 7.7.3) was performed to determine the payload source term for the baffle plates and formers. The incore detector tips were similarly determined from plant decommissioning studies.

7.2.2 Airborne Radioactive Material Sources

The release of airborne radioactive material is not a credible event with the existing design and procedures to be used. The GTCC waste handling and processing is performed in the Reactor Building under a controlled and monitored environment. The drying and sealing of the canister uses similar techniques as used for the fuel canister to preclude airborne leakage. Specific steps used to preclude airborne leakage in the transfer and storage phase are identical to those steps used in DSC transfer operations discussed in Volume I Section 7.

7.3 Radiation Protection Design Features

7.3.1 Shielding

7.3.1.1 Radiation Shielding Design Features

Shielding design features of the HSMs and cask are discussed in Volume I, Section 7.3.1 and in Volume III, Section 7.3.2.1, respectively. The shielding design features for the GTCC canister is similar to the fuel canister described in Volume I Section 7.3. The outer dimensions of the GTCC canister are identical to those of the fuel canisters. The GTCC canister side wall is 1-1/4 inches thick and the top and bottom ends of the canister provide 10-1/4 and 8-3/4 inches of steel shielding, respectively. The GTCC waste is contained in an internal basket with 1-1/2 inch thick walls and bottom plate.

7.3.1.2 Shielding Analysis

A shielding analysis (Ref. 7.7.4) was performed to determine the dose rates of the canister during operational, transfer, and storage modes. The framework of the GTCC shielding analysis is the same computer models used to calculate the dose rates of the cask and HSM for the fuel canisters. The computer model was revised to accurately model the specific GTCC canister and the GTCC waste within the container. This calculation concludes that the GTCC canister design with a side wall of 1-1/4 inches thick and top and bottom ends that provide 10-1/4 and 8-3/4 inches of steel shielding respectively is adequate to store the proposed GTCC waste in the existing Rancho Seco ISFSI. With one exception, the average centerline GTCC dose rates are less than the design basis dose rates of the fuel canisters. The one exception is a 10% marginal increase in the HSM back wall dose rate evaluation. The back wall dose rate is a small contributor to the site dose in the design basis analysis, which is dominated (≈ 50%) by the roof dose rate. The significant reduction in the roof dose rate (more than a factor of 2 reduction) will compensate for the small increase in the back wall dose rate. Thus the dose rate analyses for the existing fuel canister design basis bound the GTCC storage and transfer operations. The GTCC contribution to the dose rates around the transfer cask, HSM, and the site boundary will be typically less than that calculated for the design basis spent fuel under normal and accident conditions.

The storage of fuel canisters has also demonstrated the shielding calculations to be very conservative. The Volume I Table 7-4 summarizes the calculated dose rates with a predicted ISFSI fence dose rate of 1.89 mrem/hr (regulatory limit of 2 mrem/hr). Direct radiation monitoring of the ISFSI fence has found the actual dose rates to be less than 0.1 mrem/hr.

The shielding analysis of the HSM is discussed in Volume II, Section 7.3.2. The shielding analysis of the cask is discussed in Volume III, Section 7.3.2.

7.3.2 Ventilation

The HSM ventilation design is discussed in Volume I, Section 7.3.3.

7.3.3 Area Radiation and Airborne Radioactivity Monitoring Instrumentation

Area radiation and airborne radioactivity monitors are not needed at the Rancho Seco ISFSI. Monitoring devices are used to record the radiations dose at the ISFSI fence.

7.4 Estimated Onsite Collective Dose Assessment

7.4.1 Operational and Site Dose Assessment

Once the GTCC waste is segmented and staged, the expected cumulative exposure received by operational personnel during the GTCC waste processing including basket insertion, canister closure, transfer activities, and HSM storage are bounded by the existing design basis for fuel loading operations. See Volume I Section 7 for operational and site dose assessments. The activities, durations and personnel involved during those processes will be nearly identical to those discussed for fuel canister operations.

7.5 Health Physics Program

The organization, equipment, facilities and procedures of the radiation protection program is discussed in Volume I Section 7.5.

7.6 Estimated Offsite Collective Dose Assessment

7.6.1 Effluent and Environmental Monitoring Program

No effluents are released from the ISFSI during operation. Effluents released during canister loading are treated using existing RSNGS systems as described in Section 6. Since no effluents are released from the Rancho Seco ISFSI site, no effluent monitoring program is required.

7.6.2 Analysis of Multiple Contribution

As shown in reference 7.7.5, the predicted annual dose equivalent at both the Rancho Seco site boundary and at the nearest residence (assuming 2080 hours per year at the boundary and 100% occupancy at the nearest residence) is well below the 10 CFR 72.104 and 40 CFR 190 limits of 25 mrem.

In accordance with NRC guidance, a normal and off-normal operation confinement evaluation was conservatively performed assuming that surface crud escapes the GTCC canister at a leak rate specified in Section 10.3.4. The worst case calculated annual exposure, 0.020 mrem for off-normal operation, is well below the 10CFR72.104 limit, even when added to the annual dose equivalent due to direct and air scattered radiation discussed in Volume I Table 7-4. The doses to the thyroid and other critical organs are also below the 10CFR72.104 limits. It is therefore concluded that the radiation exposure due storage of the GTCC waste adjacent the fuel storage will not exceed the regulatory requirements of 10 CFR 72 and 40 CFR 190. Storage of the GTCC canister has negligible impact on the offsite collective dose assessment provided in Volume I.

7.6.3 Estimated Dose Equivalents

Since no airborne effluents are postulated to emanate from the ISFSI, the direct and air-scattered radiation exposure discussed in previous Sections comprises the total radiation exposure to the public. No estimation of effluent dose equivalents is necessary.

7.6.4 Liquid Release

No liquids are released from the Rancho Seco ISFSI.

7.7 References

7.7.1 "Information Relevant to Ensuring That Occupational Radiation Exposures at Nuclear Power Stations Will Be As Low As Is Reasonably Achievable (ALARA)," Regulatory Guide 8.8.

7.7.2 "Operating Philosophy for Maintaining Occupational Radiation Exposures As Low As Is Reasonably Achievable," Regulatory Guide 8.10.

7.7.3 Report 2041-RE-009 Rev. 1 - "Rancho Seco Activation Analysis and Component Characterization", WMG Project 2041D.

7.7.4 Shielding Analysis for Greater than Class C (GTCC) Canister, Transnuclear Calculation 13302-0501, Revision 0.

7.7.5 Confinement/Release calculation to the GTCC Canister, Transnuclear Calculation 13302-0502, Revision 0.

8. ANALYSIS OF DESIGN EVENTS

In previous Sections of this SAR, the features of the Rancho Seco ISFSI which are important to safety have been identified and discussed. The purpose of this Section is to present the engineering evaluations for normal and off-normal operating conditions, and to establish and qualify the system for a range of credible and hypothetical accidents.

8.1 Normal and Off-Normal Operations

The normal and off-normal ISFSI operations for dead weight, operational loads, and live loads are discussed in Volume I Section 8. The GTCC canister is comparable to the fuel canisters in the following parameters:

- The nominal thickness of the GTCC shell and cover plates equal to, or greater than the thickness specified for the FO/FC canisters
- The material properties specified for the GTCC shell assembly (ASTM Type 304 stainless) has identical chemical and physical properties as the material specified for the FO/FC canisters (ASME A240 type 304).
- The required thickness of the welds in the GTCC shell is equal to or greater than the nominal thickness specified for the FO/FC canisters.

In addition, the GTCC waste specified for the GTCC canister is comprised of large pieces of steel and not spent fuel. The contents will remain intact under all possible loading conditions as they are inherently much more rigid than the fuel assemblies.

The GTCC canister contains insignificant heat load. Internal pressures are therefore not anticipated to significantly elevate above the helium backfill pressures specified in Section 10.3.3. In addition, temperature variations in the GTCC shell assembly will be small. Since the heat load is small and the material temperatures will only be slightly greater than ambient, the temperature variations at any point in the shell will be approximately equal to the variation in ambient temperature. These small temperature cycles will not result in damage to, or failure of, the GTCC shell assembly

8.2 Accident Analyses for the ISFSI

The accident conditions for cask drop, canister leakage, earthquake, and fire are discussed in Volume I Section 8. The GTCC canister is comparable to the fuel canisters in the parameters provided in Section 8.1 above. Accident pressurization is not considered a credible event due to the very low heat load of the GTCC waste.

9. CONDUCT OF OPERATIONS

The organization and general plans for operating the Rancho Seco ISFSI will not be altered or modified by the addition of the GTCC canister. The external characteristics of the GTCC canister are functionally identical to those of the fuel canisters. Once the basket has been placed within the GTCC shell, the remaining steps to drain, seal, and transfer the loaded canister are nearly identical to those of a fuel canister except that operations will be performed in the Reactor Building instead of the Spent Fuel Building. Existing procedures, qualifications and training used for the spent fuel loading operations will be used to the extent possible for the GTCC campaign.

The Manager, Plant Closure and Decommissioning is currently responsible for the overall operation and maintenance of RSNGS and for ensuring the safe storage of the spent nuclear fuel and irradiated core components. This individual will continue to be responsible for safe storage of the fuel, and is responsible for the safe operation of the Rancho Seco ISFSI.

Administrative programs such as radiation protection, environmental monitoring, emergency preparedness, quality assurance, and training need not be modified for the transfer and storage of the GTCC canister.

9.1 Organizational Structure

Organizational structure is not altered by implementation of the GTCC canister.

9.2 Pre-Operational Testing and Operation

Functional tests of the in-plant operations, transfer operations, and HSM loading and retrieval were performed during the dry fuel campaign. Limited pre-operational testing is utilized to familiarize personnel in the facility differences between the Reactor Building and the Spent Fuel Building.

9.3 Training Program

The loaded GTCC canister is functionally identical to the fuel canisters in the ISFSI. The training program discussed in Volume I therefore remains unaltered. Work is performed in the Reactor Building rather than the Spent Fuel Building, and does not affect the essence of the training program.

9.4 Normal Operations

The preparation, review, approval, and adherence to procedures described in Volume I are not altered by the GTCC canister loading or storage. The GTCC canister will be labeled with a unique alpha-numeric designator. The alpha-numeric designator will be stamped into the canister grapple ring using a low-stress die stamp. Also The GTCC waste stored within the GTCC canister will be identified and monitored, as described in Rancho Seco procedures. The HSM storing the GTCC waste will also have a unique designation. Periodic physical inventory requirements will be met by verifying that HSMs have not been tampered with since the previous inventory.

9.5 Emergency Planning

The Rancho Seco Emergency Plan is not altered by the addition of the GTCC canister in the ISFSI. See Volume I for generic ISFSI emergency planning details.

9.6 Decommissioning Plan

The Rancho Seco Decommissioning Plan is not altered by the addition of the GTCC canister in the ISFSI. See Volume I for generic ISFSI Decommissioning planning details. The loaded DSCs, GTCC canister, and HSMs are the only components at the Rancho Seco ISFSI that may need to be removed to complete radiological decommissioning. No other decommissioning activities are envisioned because of the absence of contaminated sources. The base pad, security fence, lighting, and peripheral utility structures will in effect be decommissioned when the last DSC, GTCC canister, HSM, and MP-187 cask are removed. The non-contaminated components will be removed during ISFSI site restoration.

10. OPERATING CONTROLS AND LIMITS

10.1 Proposed Operating Controls and Limits

The Rancho Seco ISFSI storage system is unaffected by the storage of GTCC waste. Controls and limits on the GTCC canister will be applied to provide assurance that the ISFSI is unaffected. Operating controls and limits proposed for the HSMs are discussed in Section 10 of Volume II. Use of the District's existing organizational and administrative systems and procedures, record keeping, review, audit, and reporting requirements coupled with the requirements of this SAR ensures that the operations involved in the storage of GTCC waste in the Rancho Seco ISFSI are performed in a safe manner. This includes both the selection of waste qualified for ISFSI storage and the verification of the GTCC waste components prior to and during placement into the storage canister.

10.2 Development of Operating Controls and Limits

This section provides an overview of and the general bases for the operating controls and limits specified for the GTCC waste handling and storage at the Rancho Seco ISFSI to maintain the public's health and safety. The ISFSI Technical Specifications and/or SAR for fuel storage remain in force and are unaffected.

10.2.1 Technical Conditions and Characteristics for Operation

The following technical conditions and characteristics are required for the Rancho Seco ISFSI and GTCC canister:

1. GTCC waste identification
2. GTCC canister Vacuum Pressure During Drying
3. GTCC canister Helium Backfill Pressure
4. GTCC canister Helium Leak Rate of Inner Seal Weld
5. GTCC canister Dye Penetrant Test of Closure Welds
6. GTCC canister Surface Contamination
7. ISFSI Security Area Dose Rates
8. GTCC Canister Inspection Following Cask Drop
9. Post Fire Recovery Plan

10. GTCC canister Top End Dose Rates

11. HSM Dose Rates

12. Transfer Cask Dose Rates

A description of the bases for selecting the above conditions and characteristics are detailed in the operating limits in Section 10.3.

The overall technical and operational considerations are to:

1. Assure proper internal canister atmosphere to promote heat transfer, and prevent an uncontrolled release of radioactive material.

2. Assure that dose rates in areas where operators must work are as-low-as-reasonably-achievable and that all relevant dose limits are met.

Through the analyses and evaluations, this SAR demonstrates that the above technical conditions and characteristics are adequate and that no significant public or occupational health and safety hazards exist.

10.3 Operating Control and Limit Specifications

The operating controls and limits applicable to the Rancho Seco ISFSI as documented in this SAR to be implemented by the District are delineated in the following sections. Operating controls and limits applicable to the Rancho Seco ISFSI HSMs are provided in Section 10.3 of Volume II.

10.3.1 GTCC waste identification

Operating limit: All GTCC waste inserted into the GTCC canister shall be monitored and documented.

Applicability: This is applicable to all GTCC waste identified in the segmentation plan.

Objective: To ensure that GTCC waste removed from the Reactor vessel and stored in the GTCC canister is monitored and documented.

Action: Verify that GTCC waste packaged into the GTCC canister is documented prior to performing closure operations.

10.3.2 GTCC canister Vacuum Pressure During Drying

Operating limits: GTCC vacuum pressure during drying shall be ≤ 3 Torr. The time at pressure shall not be less than 30 minutes.

Applicability: During GTCC waste loading operations.

Objective: To verify that residual moisture is minimized and within the same limits as the fuel canisters.

Action: Establish the canister vacuum pressure within limits.

10.3.3 DSC Helium Backfill Pressure

Operating limits: GTCC canister helium backfill pressure shall be 0.5 to 2.5 psig.

Applicability: During GTCC waste loading operations.

Objective: To verify that the canister is maintained in an inert environment within the same limits as the fuel canisters.

Action: Establish the canister helium backfill pressure to within limits.

10.3.4 DSC Helium Leakage Rate of Inner Seal Weld

Operating limits: GTCC canister helium leakage rate of inner seal weld shall be $\leq 10^{-5}$ std-cc/sec.

Applicability: During GTCC waste loading operations.

Objective: To verify that the canister inner seal weld integrity is maintained within the same limits as the fuel canisters.

Action: Establish the canister inner seal weld leak rate within the specified limit.

10.3.5 Canister Dye Penetrant Test of Closure Welds

Operating Limit: The GTCC canister closure welds shall be liquid penetrant examined using existing fuel canister acceptance standards for liquid penetrant examinations or alternate liquid penetrant examination procedures.

Applicability: This operating limit is applicable to the inner plate, vent and siphon port covers, and outer top cover plate closure welds of the GTCC canister.

Objective: To ensure that the canister is adequately sealed in a redundant manner and to assure that all radioactive materials are confined.

Action: If the liquid penetrant test indicates that the weld is unacceptable:

a. The weld shall be repaired in accordance with approved procedures.

b. The weld shall be re-examined in accordance with this operating limit.

10.3.6 DSC Surface Contamination

Operating limits: The GTCC canister smearable surface contamination levels on the outer surface of the canister shall be less than 2200 dpm/100 cm^2 from beta and gamma emitting sources, and less than 220 dpm/100cm^2 from alpha sources.

Applicability: During GTCC waste loading operations.

Objective: To establish administrative controls to limit personnel exposure to As Low As Reasonably Achievable (ALARA) and maintain the same level of controls as the fuel canisters.

Action: Decontaminate if required to establish surface contamination levels to above limits.

10.3.7 ISFSI Security Area Dose Rate

ISFSI Security area dose rate limits described in Volume I remain in effect and will not be exceeded. The Rancho Seco ISFSI outer security fence area boundary shall be checked to verify that this operating limit has been met after the GTCC canister is placed in storage.

10.3.8 GTCC canister Inspection Following Cask Drop

Operating limits: The GTCC canister will be inspected for damage after any transfer cask drop.

Applicability: During GTCC waste loading operations where the cask is involved in a free fall drop.

Objective: To verify that the GTCC canister has not been detrimentally affected from a free fall drop condition.

Action: If a free fall drop occurs, examine and evaluate the suitability of the GTCC canister using the RSNGS corrective action program.

10.3.9 Post Fire Recovery Plan

Post fire recovery will not be altered from that described in Volume I.

10.3.10 GTCC Canister Top End Dose Rates

Operating Limit: Dose rates at the following locations shall be limited to levels which are less than or equal to:

a. 200 mrem/hr at top shield plug surface at centerline with water in cavity.

b. 400 mrem/hr at top cover plate surface at centerline without water in cavity.

Applicability: This operating limit applies to the GTCC canister.

Objective: The dose rate is limited to this value to maintain dose rates as low as reasonably achievable during canister closure operations.

Action: If specified dose rates are exceeded, evaluate and correct the problem using the RSNGS corrective action program.

10.3.11 HSM Dose Rates

Operating Limit: Dose rates at the following locations shall be limited to levels which are less than or equal to:

a. 400 mrem/hr at 3 feet from the HSM surface.

b. 100 mrem/hr outside of HSM door on center line of GTCC canister.

c. 20 mrem/hr at end shield wall exterior.

Applicability: This operating limit is applicable to all HSMs, which contain a loaded canister.

Objective: The dose rate is limited to this value to ensure that the cask (canister) has not been inadvertently loaded and to maintain dose rates as low as is reasonably achievable (ALARA) at locations on the HSMs where verification is performed, and to reduce offsite exposures during storage.

Action: If specified dose rates are exceeded, evaluate and correct the problem using the RSNGS corrective action program.

10.3.12 Transfer Cask Dose Rates

Operating Limit: Dose rates from the transfer cask shall be limited to levels which are less than or equal to:

a. 200 mrem/hr at 3 feet with water in the canister cavity.

b. 500 mrem/hr at 3 feet without water in the canister cavity.

Applicability: This operating limit is applicable to the transfer cask containing a loaded canister.

Objective: The dose rate is limited to this value to ensure that the canister has not been inadvertently loaded and to maintain dose rates as low as is reasonably achievable during GTCC canister transfer operations.

Action: If specified dose rates are exceeded, evaluate and correct the problem using the RSNGS corrective action program.

11. QUALITY ASSURANCE

The Sacramento Municipal Utility District Quality Assurance Program is not altered or modified for the GTCC canister. See Volume I Section 11 for a description of the quality assurance (QA) program.