Tennessee Valley Authority, Post Office Box 2000, Decatur, Alabama 35609-2000

August 24, 2004

TVA-BFN-TS-405

10 CFR 50.90

U.S. Nuclear Regulatory Commission
ATTN: Document Control Desk
Mail Stop: OWFN, P1-35
Washington, D.C. 20555-0001

Gentlemen:

In the Matter of	)	Docket Nos. 50-259
Tennessee Valley Authority	)	50-260
		50-296

BROWNS FERRY NUCLEAR PLANT (BFN) - UNITS 1, 2, AND 3 – SUPPLEMENTAL INFORMATION ASSOCIATED WITH RESPONSE TO REQUEST FOR ADDITIONAL INFORMATION (RAI) RELATED TO TECHNICAL SPECIFICATIONS (TS) CHANGE NO. TS-405 - ALTERNATIVE SOURCE TERM (AST) (TAC NOS. MB5733, MB5734, MB5735)

This letter provides a supplement to the additional information provided by the July 2, 2004 letter, related to the Unit 1 seismic ruggedness evaluation, in support of TS-405 (Reference 1).

TS-405, which was submitted on July 31, 2002 (Reference 2), requested a license amendment and TS changes for application of AST methodology for BFN Units 1, 2, and 3. The Unit 1 analysis for the Main Steam Line Break Accident, the Loss-of-Coolant Accident (LOCA), and the Control Rod Drop Accident had not been performed for Unit 1 and was not included in the July 31, 2002 letter.

Subsequently, in a May 17, 2004 letter, (Reference 3) TVA submitted the results of the Unit 1, Main Steam Line Break Accident, LOCA and Control Rod Drop Accident analysis. In a teleconference on June 15, 2004, NRC requested that TVA provide

A001

Printed on recycled paper

the Unit 1 seismic ruggedness evaluation for review as part of the approval of the AST LOCA analysis

On July 2, 2004, TVA provided Unit 1 Main Steam Isolation Valve (MSIV) Seismic Ruggedness Evaluation. The evaluation consisted of the MSIV "Seismic Ruggedness Verification At Browns Ferry Nuclear Plant Unit 1" and TVA's "Seismic Evaluation Report" (Calculation CDN0-001-990113).

During an August 10, 2004, teleconference between TVA and the NRC Unit 1 project manager, it was determined that additional information was necessary for the staff to complete their review of the Unit 1 Seismic Ruggedness Evaluation. Accordingly, by this letter, TVA is providing a detailed discussion describing of the alternate flow path to the condenser, the reliability of the alternate flow path, and the structural integrity of the components within the alternate flow path.

During the refurbishment of the Unit 1 condenser, TVA used a different material for the condenser tubes than Units 2 and 3. This resulted in a slightly different seismic mass for the Unit 1 condenser. As a result of the change in mass, TVA performed a Unit 1 specific calculation to demonstrate the acceptability of the Unit 1 Condenser. So, TVA is also providing calculation CDN1-000-2004-0041, "Seismic Verification of Condenser and its Anchorage, MSIV Ruggedness Seismic Analysis Resolution of POS 15-1."

Enclosure 1 provides a detailed discussion concerning the Alternate Leakage Treatment flow path. Specifically, excerpts from TVA's July 9, 2004 (Reference 4), "Unit 1 – Technical Specification (TS) – 436 – Increased Main Steam Isolation Valve (MSIV) Leakage Rate Limits and Exemption from 10 CFR 50, Appendix J," are provided.

Enclosure 2 provides TVA calculation CDN1-000-2004-0041, "Seismic Verification of Condenser and its Anchorage, MSIV Ruggedness Seismic Analysis - Resolution of POS 15-1."

It is noted that any time the Boiling Water Reactor Owners' Group (BWROG) methodology described in "BWROG Report for Increasing MSIV Leakage Rate Limits and Elimination of Leakage Control Systems," is referenced to in TS-405 correspondence, TVA is referencing BWROG letter, W. G. Warren to NRC, dated November 22, 1999, "Transmittal of Approved GE Licensing Topical Report, NEDC-31858P-A," dated August 1999.

By TVA letter dated December 9, 2002 (Reference 5), TVA committed to make any modifications required to make Unit 1 seismically rugged prior to the restart. There are no additional regulatory commitments contained in this letter.

If you have any questions about this, please telephone me at (256) 729-2636. Pursuant to 28 U. S. C. § 1746 (1994), I declare under penalty of perjury that the foregoing is true and correct. Executed on August 24, 2004.

Sincerely,

T. E. Abney
Manager of Licensing
and Industry Affairs

Enclosures
1. Description and Evaluation Of The Alternate Flow Path To The Unit 1 Condenser
2. Seismic Verification of Condenser and Its Anchorage

cc: See page 4:

References:

1. TVA Letter to NRC Dated July 2, 2004, "Browns Ferry Nuclear Plant (BFN) – Units 1, 2, and 3 – Response To Request For Additional Information (RAI) Related to Technical Specifications (TS) Change No. TS-405 Alternative Source Term (AST)."

2. TVA Letter to NRC Dated July 31, 2002, "Browns Ferry Nuclear Plant (BFN) – Units 1, 2, and 3 – License Amendment – Alternative Source Term."

3. TVA Letter to NRC Dated May 17, 2004, "Browns Ferry Nuclear Plant (BFN) – Units 1, 2, and 3 – Response To Request For Additional Information (RAI) And Unit 1 Analysis Results Related to Technical Specifications (TS) Change No. TS-405 Alternative Source Term (AST)."

4. TVA letter to NRC Dated July 9, 2004, "Browns Ferry Nuclear Plant (BFN) Unit 1 – Technical Specification (TS) 436 – Increased Main Steam Isolation Valve (MSIV) Leakage Rate Limits and Exemption From 10 CFR 50, Appendix J."

5. TVA letter to NRC Dated December 9, 2002, "Browns Ferry Nuclear Plant (BFN) – Units 1, 2, and 3 – Response To Request For Additional Information (RAI) Related to Technical Specifications (TS) Change No. TS-405 Alternative Source Term (AST)."

Enclosures
cc (Enclosures):

State Health Officer
Alabama State Department of Public health
RSA Tower – Administration
Suite 1552
P.O. Box 30310
Montgomery, Alabama 36130-3017

Ms. Eva A. Brown, Project Manager
U.S. Nuclear Regulatory Commission
One White Flint, North
(MS 08G9)
11555 Rockville Pike
Rockville, Maryland 20852-2739

Mr. Stephen J. Cahill, Branch Chief
U.S. Nuclear Regulatory Commission
Region II
Sam Nunn Atlanta Federal Center
61 Forsyth Street, SW, Suite 23T85
Atlanta, Georgia 30303-8931

NRC Resident Inspector
Browns Ferry Nuclear Plant
10833 Shaw Road
Athens, Alabama 35611-6970

ENCLOSURE 1

TENNESSEE VALLEY AUTHORITY
BROWNS FERRY NUCLEAR PLANT
UNITS 1, 2, AND 3

DESCRIPTION AND EVALUATION OF THE ALTERNATE FLOW PATH TO THE UNIT 1 CONDENSER

The following excerpts are from Enclosure 1 of TVA's, Unit 1 – Technical Specification (TS) 436 – Increased Main Steam Isolation Valve (MSIV) Leakage Rate Limits and Exemption From 10 CFR 50, Appendix J (Reference 2). These excerpts provide a detailed description and evaluation of the Unit 1 Alternate Leakage Treatment flow path from the Main Steam Isolation Valves (MSIVs) to the condenser.

4.1 Summary

There are four steam lines installed on each BFN unit and each line is provided with dual quick-closing MSIVs. These valves serve to isolate the reactor coolant system in the event of steam line breaks outside primary containment, a design basis Loss of Coolant Accident (LOCA), or other events requiring containment isolation. For a detailed discussion of the system components and operating characteristics, refer to Section 4.6.3 of the BFN Updated Final Safety Analysis Report (UFSAR).

For a steam line break, the MSIV isolation function prevents damage to the fuel barrier by limiting the loss of reactor coolant. For the LOCA event, the valves limit the release of radioactive materials by closing the primary containment barrier to contain a leak from the nuclear system.

Although the MSIVs provide a low leakage barrier, industry and BFN experience indicates that it is difficult to maintain the valves to meet the current TS Surveillance Requirement 3.6.1.3.10 performance criteria of 11.5 scfh per valve.

TVA proposes the utilization of the main steam drain lines to preferentially direct any MSIV leakage to the main condenser. This drain path takes advantage of the large volume of the steam lines and condenser to provide holdup and plate-out of fission products that may leak through the closed MSIVs. In this approach, the main steam lines, steam drain piping, and the main condenser are used to mitigate the consequences of an accident:

- To limit potential off-site exposures below those specified in 10 CFR 50.67(b)(2)(i) for the exclusion area and, 10 CFR 50.67(b)(2)(ii) for the low population zone, and
- To limit control room operator doses below those specified in 10 CFR 50.67(b)(2)(iii) for control room personnel.

Because the original BFN design basis of the Turbine Building main steam piping and components was not Seismic Class I, the components and piping systems used in this treatment path have been evaluated to be capable of performing their function following a Design Basis Earthquake (DBE) in accordance the technical methodology in the BWROG report, NEDC-31858P-A. Seismic verification walkdowns and evaluations of piping/supports have been performed to demonstrate the main steam line piping and components that comprise the Alternate Leakage Treatment (ALT) path to the condenser are rugged and able to perform the safety function of MSIV leakage control and treatment following a DBE. In addition, TVA retained the services of Facility Risk Consultants (FRC), Inc. (which includes personnel formerly with EQE International, who performed this work on Units 2 and 3) to perform the walkdowns and evaluations of the MSIV seismic ruggedness. As previously documented in References 1 and 3 for BFN Units 2 and 3, based on past earthquake experience, welded steel piping and condensers constructed to normal industrial practices have been found to be seismically rugged and not susceptible to a primary collapse mode of failure as a result of the seismic vibration modes experienced at sites examined in the earthquake database.

Using the earthquake experience-based methodology, supplemented by the walkdowns and evaluations, it has been concluded the components in the ALT path can be relied upon to maintain structural integrity during a DBE.

Off-site dose calculations and control room dose calculations have been performed using the ALT path and an increased MSIV leakage term in accordance with NEDC-31858P-A. The revised calculations show that the doses limits prescribed in 10 CFR 50.67(b)(2)(i) for the exclusion area, 10 CFR 50.67(b)(2)(ii) for the low population zone, and in 10 CFR 50.67(b)(2)(iii) for control room personnel are maintained.

4.2 Response to Licensee Specific Items in NRC Safety Evaluation of the Topical Report

In March 1999, NRC issued a Safety Evaluation accepting the BWROG topical report for increasing MSIV leakage limits (Reference 4). This report was approved for direct reference in individual plant submittals, subject to the plant unique conditions and limitations described in Section 6 of the Safety Evaluation. Provided below are the licensee specific limitations required to be addressed in this application and a summary / cross-reference to the required information.

Limitation 1:

Individual licensees should provide a detailed description of the ALT drain path and the basis for its functional reliability, commensurate with its intended safety-related function. The licensee should also describe their maintenance and testing program for the active components (such as valves) in the ALT path.

Response:

A detailed description of alternate flow path to condenser is provided in Section 4.3. In general, the piping and components within the boundaries of the MSIV ALT drain path are considered to be within the scope of the BFN Section XI In Service Testing (IST) and In Service Inspection (ISI) programs. Accordingly, they will be inspected and tested in accordance with the IST/ISI programs. A detailed discussion is provided in Section 4.4.

Limitation 2:

Individual licensees should provide plant-specific information for piping design parameters (e.g., uniqueness, of piping configurations, pipe span between supports, and diameter-to-thickness ratios for each pipe size), to demonstrate that they are enveloped by those associated with the earthquake experience database.

Response:

As previously mentioned, TVA retained the services of FRC to perform the walkdowns and evaluations to document the ALT pathway seismic ruggedness as was done for BFN Units 2 and 3. The in-plant screening walkdown evaluations focused on key design attributes and seismic issues such as pipe spans and support integrity; seismic interaction issues (including proximity impact and falling concerns; differential displacement of structures, equipment and piping, performance of seismic verification boundary components; etc). Details are provided in Section 4.6.

Limitation 3:

Individual licensees should demonstrate that the plant condenser design falls within the bounds of design characteristics found in the earthquake experience database. This should include a review of as-built design documents and/or a walkdown to verify that the condenser has adequate anchorage.

Response:

In general, the condensers in the earthquake experience database exhibited substantial seismic ruggedness, even when they typically were not designed to resist earthquakes. This is a common conclusion in studies of this type on other

plant items such as welded steel piping in general, anchored equipment such as motor control centers, pumps, valves, structures, and so forth. The actions taken to verify the seismic performance of the condenser included a Unit 1 specific walkdown and analysis of the seismic ruggedness of the condenser and its anchorage. Details are described in Section 4.7.

Limitation 4:

Individual licensees should perform a plant-specific seismic evaluation for representative supports and anchorages associated with affected piping and the condenser.

Response:

As discussed in Section 4.1, plant-specific seismic evaluations were performed for supports and anchorages associated with affected piping. The specific actions taken to verify the seismic performance of the condenser are described in Section 4.7. These actions included a Unit 1 specific analysis of the seismic ruggedness for the condenser and its anchorage.

Limitation 5:

Individual licensees should confirm that the condenser will not fail due to seismic II/I type of interaction (e.g., structural failure of the turbine building and its internals).

Response:

Structures, piping or equipment adjacent or above the components under review were evaluated for seismically induced II/I or impact failures. Additional information is provided in Section 4.6.1.

Limitation 6:

Individual licensees of plants whose FSARs or UFSARs reference Appendix A to 10 CFR Part 100 should perform a bounding seismic analysis for the ALT path piping. Those licensees committed to Part 100 should discuss the basis for selecting a particular portion of the bypass/drain line for the bounding analysis.

Response:

The BFN UFSAR does not reference Appendix A to 10 CFR 100. Unit 1 specific seismic verification walkdowns and the previous evaluations of bounding Units 2 and 3 piping/supports were performed to demonstrate the main steam line piping and components that comprise the ALT path to the condenser are rugged and

able to perform the safety function of MSIV leakage control and treatment following a DBE.

Limitation 7:

The methodology and criteria used for the analytical evaluations should be those which are in compliance with the design basis methodology and criteria, or those which are acceptable to the staff.

Response:

The load combinations and stress allowables utilized in the seismic assessments for the resolution of outliers and the evaluation of ALT piping, related components, and supports are consistent with plant licensing basis requirements used to address Class II piping, and pipe supports and components for pressure boundary integrity and position retention at BFN.[1] The objective of the subject seismic assessments was to provide assurance that the ALT pathway would maintain pressure boundary integrity and would not be adversely affected by such factors as (1) differential displacements of structures, equipment, and piping (2) pipe support integrity issues and (3) seismic interaction issues such as the impact of piping with equipment, structural features, and other piping.

Additionally, valves that are classified as active in establishing the ALT path must be functional following the DBE and were evaluated in accordance with the Generic Implementation Procedure (GIP) methodology. Qualification in accordance with GIP provides reasonable assurance the required valves will be functional. Details regarding the efforts and criteria used to ensure structural integrity are provided in Section 4.6.

Limitation 8:

The facility ground motion estimates shown in Figures 1 through 13 of this attachment have been reviewed and accepted by the staff for inclusion in BWROG's earthquake experience database. These 13 facility ground motion estimates may be used to verify the seismic adequacy of equipment in the alternative MSIV leakage pathway for plants referencing the BWROG's Topical Report, NEDC-31858P, Revision 2.

[1] J. Partlow (NRC) to All Unresolved Safety Issue (USI) A-46 Plant Licensees Who Are Members of the Seismic Qualification Utility Group (SQUG), "Supplement No. 1 to Generic Letter (GL) 87-02 that Transmits Supplemental Safety Evaluation Report No.2 (SSER No.2) on SQUG Generic Implementation Procedure, Revision 2 as Corrected on February 14 1992 (GIP-2)," May 22, 1992.

Response:

Comparisons of the ground response spectra of selected database facilities with BFN design basis ground spectrum were made to establish the applicability of NEDC-31858P-A. It was concluded that the BFN DBE ground spectrum is generally bounded by the earthquake experience database sites at the frequencies of interest. Details are included in Section 4.6.2.

Limitation 9:

At the present time, there is no standard, endorsed by NRC that provides guidance for determining what constitutes an acceptable number of earthquake recordings and their magnitudes and for determining the required number of piping and equipment items that should be referenced in the earthquake experience database when utilizing the BWROG methodology. Therefore, individual licensees are responsible for ensuring the sufficiency of the data to be submitted for staff review and determination. When a revision of the QME Standard that incorporates specific criteria for use of experience data in the qualification of mechanical equipment is endorsed by NRC, such criteria should be followed in future applications involving MSIV ALT pathway evaluations.

Response:

The earthquake databases have been verified applicable to BFN as discussed in Section 4.6.2.

4.3 Detailed Description of Alternate Flow Path to Condenser

Figure 1[2], MSIV Seismic Verification Boundary, provides a flow diagram schematic which shows the ALT pathway from the MSIVs to the condenser and the boundary valves associated with the ALT pathway for BFN Unit 1. As discussed in NEDC-31858P-A, the ALT pathway establishes a seismically rugged route to contain and direct leakage from the MSIVs to the condenser following a design basis LOCA.

The ALT path is from the outboard side of the MSIVs through four 3-inch lines which join a 4-inch drain line path to the condenser. The flow path is through normally open Flow Control Valves (FCVs)-1-168, 169, 170, and 171, and continues through FCV-1-57, FCV-1-58, and FCV-1-59 to the main condenser. FCV-1-57 is normally open and FCVs-1-58 and 1-59 are normally closed valves. FCV-1-59 has a 4-inch bypass line which also routes to the condenser. The bypass around FCV-1-59 is free of valves and orifices.

[2] This figure is found on the last page of this enclosure.

Establishment of the ALT path is based on valves FCV-1-58 and FCV-1-59 (although FCV-1-59 is not strictly required because of the bypass line) being opened by operators in response to those events taking credit for the availability of the ALT path to the condenser. Operating procedures will provide procedural requirements to establish the ALT path to the condenser.

FCVs-1-168, 169, 170, 171, and 57 are normally open motor operated valves which would remain open on loss of off-site power. FCV-1-58 and FCV-1-59 are normally closed valves which would require operator action to align the ALT path to the condenser. These two valves are powered from essential power buses with emergency diesel generator back-up. To further ensure valve reliability, FCV-1-58 and FCV-1-59 are in the IST program and will be periodically stroke tested. However, as stated above, FCV-1-59 has an open full bypass line, therefore, its operation is not essential to align the ALT path.

The ALT pathway includes the main steam and main steam drain piping, and branch lines, which act as a boundary volume to contain the MSIV leakage and direct it via the ALT pathway to the condenser. All of the boundary valves fall into one of the following categories:

1. Manual isolation valves that are normally closed;

2. Motor operated valves that are normally closed;

3. Air operated valves that are normally open, but fail closed on loss of power, loss of air, or loss of control signal;

4. Air operated valves that are normally open which will require an operator action to close; and

5. Valves isolated by a spring assisted in-line check valve, which has a opening pressure in excess of the ALT drain path differential pressure once the MSIVs have closed and the line has depressurized.

The following changes to boundary valves will be made prior to Unit 1 restart:

1. The steam line supplies to the Offgas Preheaters currently do not have adequate boundary valves. Therefore, in-line check valves (CKV) CKV-1-742 and CKV-1-744 are being added via DCN 51112 to these lines to serve as the boundary valves. Refer to Figure 1 for the location of these valves.

2. Pressure Control Valve (PCV)-1-147 is currently an air operated valve which fails open. Therefore, PCV-1-147 is being modified via DCN 51112 by changing the operator to an operator that will fail closed on loss of power, air, or control signal.

PCV-1-147 is used during reactor startup to provide steam seals to the main turbine. At higher reactor powers (above approximately 25% power), the BFN turbine is self-sealing and PCV-1-147 is maintained closed by the valve controller. The existing failure position (open) of PCV-1-147 presents an operational problem in potentially overwhelming the capacity of the seal steam subsystem to "unload" (self regulate) the seal steam header pressure. Therefore, in the event of an "open" failure, to continue normal power operation, it would likely be necessary to supplement the automatic seal steam unloader valves, PCV-1-148A and B, by opening the manual unloader valve, FCV-1-149, and/or by closing the high pressure steam supply valve, FCV-1-146.

The new failure position (closed) could present an operational problem only at low reactor powers (below approximately 25 percent power). This could result in loss of condenser vacuum if not corrected. Low seal steam pressure is alarmed in the control room and the associated Alarm Response Procedure will direct the operator to open the steam seal bypass valve (FCV-1-145) to restore steam seal pressure. This is a simple task that can be performed from the main control room and there is ample time to respond before condenser vacuum is lost.

From the above discussion it is seen that the failure of PCV-1-147 to either an open or closed position results in an operational problem depending on the power level of the reactor. Either end state is readily remediable by operator action. Since the reactor is almost always at high power except for brief periods of start-up and shutdown operations, the new fail-closed mode is preferable from an operational and safety point of view. PCV-1-147 is not a safety-related valve and its operation is not currently assumed in the mitigation of design basis accidents (DBA) or transients. Therefore, it is concluded that the new fail-closed mode to maintain the ALT boundary is satisfactory and does not adversely affect normal reactor operation.

A secondary passive flow path also exists from the MSIVs to the condenser. This flow path consists of:

1. Four 2-inch bypass lines, which contain 0.25-inch orifices around FCV-1-168, 169, 170 and 171;

2. A 1-inch bypass around the FCV-1-58 valve which has a 0.1875-inch orifice and a normally open manual valve, Hand Control Valve (HCV)-1-525 and;

3. A 4-inch bypass line around FCV-1-59.

The ALT path is from the outboard side of the MSIVs through FCV-1-58 to the condenser. This path satisfies the sizing requirements of NEDC-31858P-A paragraph 6.1.1(2) that states that the ALT flow path should, based on the

radiological dose methodology, be at least 1 square inch for internal cross sectional area. The orificed bypass path around FCV-1-58 shown in Figure 1 addresses Section 5.3 of the NRC safety evaluation dated March 3, 1999, which states that a secondary path to the condenser, having an orifice, should exist. This secondary path is considered a contingency alignment in the event of the unlikely failure of FCV-1-58 and is not sized to meet the 1-inch path provision discussed in the NEDC specified for the credited ALT path. Moreover, NEDC-31858P-A does not prescribe that a secondary ALT path be available which is fully redundant to the credited ALT path in terms of sizing.

4.4 Reliability of the Alternate Flow Path

As previously noted, Figure 1, provides a flow diagram that shows the ALT leakage pathway from the MSIVs to the condenser, and the boundary valves. The boundary valves and material properties of the drain line piping and branch lines have been documented. All boundary valves are either closed during normal system operation or fail closed upon loss of power, or loss of control air or hydraulic pressure.

To establish the primary ALT flow path to the condenser, FCV-1-58 and FCV-1-59 will be opened using hand switches in the main control room. FCV-1-58 will also auto-open for certain combinations of the MSIVs being closed and turbine speed conditions. As noted above, the opening of FCV-1-59 is not essential since it has a 4-inch non-orificed bypass line. Both FCV-1-58 and FCV-1-59 will be powered from essential power buses with emergency diesel backed power. Therefore, they are designed to be available during and after a LOCA event concurrent with a loss of off-site power.

The most limiting single active failure would be the failure of FCV-1-58 valve to open. In this condition, MSIV leakage flow would be diverted through the 1inch orificed bypass line around FCV-1-58 and through normally open manual valve HCV-1-525. With the 0.1875-inch orifice, it is calculated that the majority of MSIV leakage would still be directed to the condenser with a smaller remainder through the closed Main Steam Stop/Control Valves to the high pressure turbine. Therefore, even in the unlikely event of this single active failure, the bulk of the MSIV leakage will still be routed to the condenser.

The failure of FCV-1-58 is unlikely to result from a loss of offsite electrical power. For example, FCV-1-58 is powered by 480-V Reactor Motor Operated Valve (RMOV) Board IC. RMOV Board 1C is normally aligned to 480-V Shutdown Board IB which provides Division II essential power. The alternate feed to RMOV Board 1C is 480-V Shutdown Board 1A which provides Division 1 essential power. These 480-V Shutdown Boards have separate Emergency Diesel Generators as back-up power supplies through their respective 4160-V Shutdown Boards.

If the normal feeder (480-V Shutdown Board 1B) to RMOV Board IC is lost, it can be transferred to its alternate power supply (480-V Shutdown Board 1A) by remote breaker operation. Therefore, it is an easy operation to transfer 480-V RMOV Board IC to its alternate emergency power supply. As noted above, the two 480-V Division I and II Shutdown Boards both have their own (separate) Emergency Diesel Generator power supplies. Refer to UFSAR Figures 8.4-I.b and 8.4.2 for a diagram of this electrical distribution arrangement. For the reasons stated above, the current design ensures that power will be available to FCV-1-58 in the event of loss of offsite power.

TVA considers that the proposed ALT path configuration using FCV-1-58 is consistent with the NEDC criteria to provide a reliable ALT path. TVA is also providing a secondary orificed contingency path in the unlikely event of a failure of FCV-1-58. With the 0.1875-inch orificed path around FCV-1-58, TVA determined that the majority of MSIV leakage would still be directed to the condenser with a smaller remainder through the closed Main Steam Stop/Control Valves to the high pressure turbine. The Main Steam Stop/Control Valves will be in the preventative maintenance program. As such, one Main Steam Stop and one Control valve will be refurbished each outage. These valves will be tested each refueling outage for leak tightness and are highly reliable. Therefore, even in the unlikely event of the failure of FCV-1-58, the bulk of the MSIV leakage would still be routed to the condenser, hence, reducing potential control room and offsite doses.

In general, the piping and components within the boundaries of the MSIV ALT drain path are considered to be within the scope of the BFN Section XI IST and ISI programs, and, accordingly, will be inspected and tested in accordance with the IST/ISI programs. The IST program will test the power operated valves within the ALT drain path boundary on a periodic basis. The specific test requirements will be based on the function of the individual valve (e.g., passive versus active). Certain valves that serve as part of the ALT drain path boundary (for example, Main Turbine Stop and Bypass valves) are specifically excluded from the IST program in accordance with Regulatory Guide 1.26, Quality Group Classifications and Standards for Water-, Steam-, and Radioactive-Waste-Containing Components of Nuclear Power Plants. Some of these excluded valves will be tested during power operations to ensure their functionality and will be in the preventive maintenance program for periodic refurbishment. These valves will be included as part of the IST program, but as non-Code valves. In addition, the functionality of the ALT path has been made highly reliable through the efforts to ensure the line is seismically rugged as discussed in the Seismic Evaluation Report (TVA Calculation CDN0 001 99 0113 provided in Enclosure 2 of the July 2, 2004 letter).

FCV-1-58 was considered for inclusion in the motor operated valve (MOV) test programs such as Generic Letter (GL) 89-10, "Safety-Related Motor-Operated Valve Testing and Surveillance," and GL 96-05, "Periodic Verification of Design-

Basis Capability of Safety-Related Power-Operated Valves." The design basis for establishing the ALT drain path is a LOCA with assumed major core damage and the MSIVs closed. With the MSIVs closed, the ALT drain path boundary is physically isolated from the reactor vessel and primary containment except for leakage through the MSIVs. The ALT drain path piping will depressurize through the orifice around FCV-1-58. In order to establish the ALT drain path, FCV-1-58 will not have to open against a large differential pressure and the post-accident system conditions will be less severe than the conditions which the FCV-1-58 valve would experience during IST testing during normal power operations (with full reactor pressure). Therefore, the FCV-1-58 will not be included in the GL 89-10/96-05 MOV programs since the periodic IST program testing on this valve is considered to be adequate to ensure its functionality.

As part of the ALT path isolation boundary, two in-line check valves (CKV-1-742 and CKV-1-744) are being added to the steam supply lines for the Offgas Pre-heaters as shown in Figure 1. These check valves will be spring assisted to remain closed against less than a 5 pound per square inch (psi) differential pressure. This is based on the pressure downstream of the MSIVs being 1 or 2 psi once the steam lines have depressurized and the condenser has lost vacuum. The check valves will be ASME Section III, Class 2 valves. Spring assisted in-line check valves have been used in the nuclear and non-nuclear industry to resolve issues with other types of check valves. This type of in-line check valve has been very reliable, and provides leak tight closure. Therefore, a spring assisted check valve is well suited for this application.

These new valves will also be within the scope of the IST Program. These check valves will be inspected and tested in accordance with the requirements for ASME Class 2 valves. As such, these valves are nominally required to be exercised to their safety position (closed) once each quarter. If quarterly or cold shutdown testing is not practical, the IST program allows that check valves may be disassembled and inspected each refueling outage as an alternative. TVA has concluded that it is not practical to exercise these valves on a quarterly or cold shutdown basis. Position 2 of GL 89-04, "Guidance on Developing Acceptable Inservice Testing Programs," allows identical check valves to be grouped together (four valves per group maximum) and disassembled on a rotating basis (one valve each refueling outage) when normal testing is not practical. Therefore, Section XI surveillance testing will consist of disassembly and inspection on a rotating basis (one check valve each refueling outage) in accordance with Position 2 of GL 89-04. The valves will also be verified to open after disassembly and inspection by proper operation of the Offgas Preheaters.

Regarding single failure considerations, these valves are well suited for this application of providing a boundary for the ALT path. They are highly reliable and provide positive isolation through their design. Alternate configurations such as fail-closed air operated valves and motor operated valves were considered, but were rejected in favor of the use of check valves. Use of check valves is

considered more reliable than air valves since operation of the check valve depends only on the system process (differential steam pressure), and not the external devices such as controllers, solenoids, switches, etc. In addition, a fail-close pneumatic valve would have a potential to negatively interfere with normal operations. MOVs would be dependent on electrical power availability and relay logic. Hence, in this application, the use of check valves is considered the best choice of components which minimizes potential interferences with plant operation while providing high reliability for retention of the ALT path boundary. As noted above, these check valves are within the scope of the BFN IST program and will be inspected and tested as described to provide assurance of proper component operation.

The majority of the ALT drain path and boundary paths fall within the ISI ASME Section III Class 2 Program. Inclusion of this piping in the ISI program further ensures the reliability of this piping through periodic inspections.

The ALT path boundary piping does not meet the criteria for inclusion in the augmented Intergranular Stress Corrosion Cracking weld inspection program. This piping is, however, part of the Flow Accelerated Corrosion (FAC) program which periodically monitors pipe wall thickness degradation.

4.6 Structural Integrity

Portions of the main steam piping and components in the Turbine Building at BFN were not originally designed as Seismic Class I. Therefore, seismic verification walkdowns and evaluations of piping/supports were performed to demonstrate the main steam line piping and components that comprise the ALT path were rugged, and would be able to perform the safety function of MSIV leakage control following a DBE.

As previously documented in References 1 and 3 for BFN Units 2 and 3, a review of the earthquake experience data on the performance of nuclear power plants and condensers was conducted. Using the experience-based methodology, supplemented by the walkdowns and evaluations, it has been concluded the components in the ALT leakage path can be relied upon to maintain structural integrity. The seismic evaluation results are summarized in this section.

In summary, the seismic verification walkdowns and evaluations of piping/supports demonstrated the main steam line piping and components that comprise the ALT path were rugged, and would be able to perform the safety function of MSIV leakage control following a DBE. Therefore, it has been concluded the components in the ALT leakage path can be relied upon to maintain their structural integrity.

4.6.1 Seismic Walkdowns

The seismic walkdown scope included the ALT path from the outboard MSIVs to the main condenser and includes the piping, instrumentation, valves, and equipment that would be required to maintain the primary ALT drain pathway and secondary path boundaries. The seismic verification boundary was established to envelope the ALT pathway shown on Figure 1.

BFN Unit 1 walkdowns were conducted on the ALT pathway system piping, equipment and components consistent with the scope of the ALT path as documented in the MSIV Ruggedness Verification at Browns Ferry Nuclear Plant Unit 1 provided in Enclosure 2 of the July 2, 2004 letter. Various design attributes of the as-installed equipment, piping, and tubing were reviewed and evaluated by a Seismic Walkdown Team to ensure that BFN installations were representative of the earthquake comparison database design practices and that components were free of known seismic vulnerabilities. Earthquake experience had previously identified that certain specific conditions were more prone to failure of piping and tubing systems and components during seismic events. Some of the conditions evaluated in the seismic walkdown reviews included:

- Piping, pipe supports and equipment design attributes;
- Seismic anchor movements;
- Seismic interaction issues (Class II/I issues and proximity issues); and
- Valve design attributes.

The above design attributes and conditions are discussed in more detail in Attachment 1, Section 3.1, of the Seismic Evaluation Report (TVA Calculation CDN0 001 99 0113 provided in Enclosure 2 of the July 2, 2004 letter). Conditions which did not conform with the walkdown screening guidelines or which were judged by the Seismic Walkdown Team to require further review were documented as open items and listed as "outliers".

As a result of the walkdowns by the Seismic Walkdown Team, 54 potential outliers were identified. A brief summary of the identified potential outliers is listed on Table 5.1 of MSIV Ruggedness Verification at Browns Ferry Nuclear Plant Unit 1 provided by Enclosure 2 of the July 2, 2004 letter. Examples of the potential outliers identified by the Seismic Walkdown Team are:

- Spans exceeding USA Standard Code for Pressure Piping (USAS) B31.1 recommendations,
- Differential displacements of main pipe and branch lines,
- Equipment anchorage deficiencies,

- Valve performance evaluation,
- Condenser and condenser anchorage evaluation, and
- Proximity and potential impact of piping with equipment, structural features, and other piping.

As documented in the table, 24 of the outliers were further evaluated by calculations and determined to be acceptable. The remaining outliers will be resolved prior to Unit 1 restart.

4.6.2 Verification of Earthquake Databases

To establish the applicability of NEDC-31858P-A, regarding usage of earthquake experience-based methodology for demonstrating the seismic ruggedness of the main steam piping and associated components for BFN, comparisons of the ground response spectra of selected database facilities with the BFN design basis ground spectrum were made. In general, the earthquake experience database sites have experienced strong ground motions that are in excess of the BFN DBE at the frequency range of interest (i.e., about 1 Hertz and above for piping and rigid range of equipment). Many of the database site ground motions envelope the conservatively estimated BFN DBE ground spectrum by large factors in various frequency bands within the 1 Hertz and above range. Of the 13 database facilities reviewed and approved by the NRC as documented in Reference 4, ten were selected for comparison to BFN and are shown in Attachment A, Figures 2-2 through 2-11, of the Seismic Evaluation Report (TVA Calculation CDN0 001 99 0113 provided in Enclosure 2 of the July 2, 2004 letter).

Based on the comparison, it was concluded that the BFN DBE ground spectrum is generally bounded by the earthquake experience database sites at the frequencies of interest. Hence, the use of an earthquake experience-based approach for demonstrating the seismic ruggedness of non-seismically analyzed main steam piping and associated components at BFN is consistent with NEDC-31858P-A recommendations and with the limitations of the NRC Safety Evaluation.

The main steam piping and condensers in the earthquake experience database exhibited substantial seismic ruggedness, even when they typically were not designed to resist earthquakes. This is a common conclusion in studies of this type on other plant items such as welded steel piping in general, anchored equipment such as motor control centers, pumps, valves, structures, and so forth. That is, with limited exceptions, normal industrial construction and equipment typically have substantial inherent seismic ruggedness, even when they are not designed for earthquakes. No failures of the main steam piping were found. Anchored condensers have also performed well in past earthquakes with damage limited to minor internal tube leakage.

NEDC-31858P-A contains detailed discussions and comparisons of main steam piping and condenser design in several earthquake experience database sites and example General Electric (GE) Mark I, II, and III plants in the United States. The general conclusions of these comparisons are as follows:

- GE plant designs are similar to or more rugged than those in the earthquake experience database that exhibited good earthquake performance;
- The possibility of significant failure in GE BWR main steam piping or condensers in the event of an eastern United States DBE is highly unlikely; and that
- Any such failure would also be contrary to a large body of historical earthquake experience data and thus unprecedented.

Additional detailed discussions of the seismic experience database comparisons and applicability to BFN are in Attachment A, Section 2, of the Seismic Evaluation Report (TVA Calculation CDN0 001 99 0113 provided in Enclosure 2 of the July 2, 2004 letter).

4.6.3 Seismic Analyses for ALT Drain Path

The majority of the MSIV ALT path piping systems and related components at BFN (those segments downstream of the outboard MSIVs and the outboard drain isolation valve) are located in the Turbine Building and are not designated as Seismic Class I systems. Thus, these piping systems were not typically seismically analyzed, but rather they were designed and installed to the requirements of USAS B31.1-1967.

The load combinations and stress allowables utilized in the seismic assessments for the resolution of outliers and the evaluation of ALT piping, related components, and supports as presented in Section 5.1.2 of the FRC Report (Enclosure 2 of the July 2, 2004 letter) are consistent with plant licensing basis requirements used to address Class II piping, and pipe supports and components for pressure boundary integrity and position retention at BFN. The objective of the seismic assessments was to provide assurance that the ALT pathway would maintain pressure boundary integrity and would not be adversely affected by such factors as:

1. Differential displacements of structures, equipment, and piping;
2. Pipe support integrity issues; and
3. Seismic interaction issues such as the impact of piping with equipment, structural features, and other piping.

Additionally, valves that are classified as active in establishing the ALT path must be functional following the DBE were evaluated in accordance with the GIP methodology as referenced in Section 3.7 of the FRC Report (Enclosure 2 of the July 2, 2004 letter). Qualification in accordance with GIP provides reasonable assurance the required valves will be functional.

The loading combinations and stress allowables utilized in the design or assessment of Class I systems (Engineered Safety Features [ESFs] - piping, pipe supports, components, etc.) are described in Appendix C of the BFN UFSAR, Structural Qualification of Subsystems and Components. The load combinations and stress allowables for ESFs were developed to assure not only pressure boundary integrity and position retention, but also for full functionality of equipment following a DBE.

In summary, the load combinations and stress allowables used for the ALT path seismic assessment are based on assuring that the system will maintain pressure boundary integrity and position retention and, in some cases for valves, maintain functionality. Since the main steam piping system housed in the Turbine Building was not originally designed to include seismic loading, a seismic verification walkdown to identify potential piping concerns was performed of the leakage pathway to provide assurance that pressure boundary integrity and position retention would be maintained. The load combinations and stress allowables discussed above are the bases used to resolve, by calculation, maintenance and/or modifications, the identified outliers. These resolutions are summarized in Tables 5.1, 6.2 and 6.3 of the FRC Report (Enclosure 2 of the July 2, 2004 letter).

As part of the plant specific seismic verification of the non-seismic designed ALT piping, and related supports and components using the earthquake experience-based approach outlined in NEDC-31858P-A, the following reviews were performed to demonstrate that the piping and related supports fall within the bounds of the earthquake experience database:

- Review of the design codes and standards, piping design parameters, and support configurations; and
- Seismic verification walkdowns to identify potential piping concerns.

The BFN ALT piping systems consist of welded steel pipe and standard support components and have support spacing that generally meet the USAS B31.1 recommended spans. Design bases for the portions of piping associated with the ALT pathway are further tabulated in Attachment A, Table 4-3, of the Seismic Evaluation Report (TVA Calculation CDN0 001 99 0113 provided in Enclosure 2 of the July 2, 2004 letter).

Attachment A, Table 4-4, also presents a general summary of the piping data that constitute the seismic experience data. Comparisons of BFN and selected

database piping parameters are presented in Attachment A, Table 4-5. Overall, BFN piping design is similar to and well represented by those designs found in the experience database sites that have been shown to perform well in past earthquakes.

The seismic adequacy of the ALT piping was addressed by performing seismic verification walkdowns to identify specific design attributes associated with poor seismic performance following the guidelines outlined in Attachment A, Section 3.1, of the Seismic Evaluation Report (TVA Calculation CDN0 001 99 0113 provided in Enclosure 2 of the July 2, 2004 letter). Additionally, bounding evaluations were previously performed for typical support configurations on BFN Units 2 and 3 using evaluation criteria discussed in Attachment A, Section 4.1, of the report. Table 4-6 summarizes the results of the support and anchorage evaluations for the selected bounding configurations. In summary, the seismic evaluations, which consist of verification walkdowns, bounding support evaluations, and the resolution of the identified walkdown outliers, will provide reasonable assurance that the ALT drain path piping, related supports, and components will remain functional in the event of a DBE at BFN.

4.6.4 Seismic Dynamic Analysis of the Turbine Building

The BFN Turbine Building is classified as a Class II structure. Class II structures are generally defined as structures which are important to reactor operation, but are not essential for preventing an accident which would endanger the public health and safety, and are not essential for the mitigation of the consequences of accidents. Class II designated structures are also required to not degrade the integrity of any Class I structure.

The methodology to determine the soil amplification factors for the various Class I structures at BFN is defined in TVA Design Criteria, which require that structures founded on soil consider soil amplification. The soil amplification factors for applicable Class I structures are shown in BFN UFSAR Chapter 12, Structures and Shielding. The horizontal soil amplification factors range from 1.0 for rock-founded structures such as the Reactor Building to a maximum of 1.6 for soil-founded structures such as the Diesel Generator Building (DGB). Similarly, the vertical soil amplification factors range from 1.0 to 1.3. Seismic demand for equipment in a particular structure is determined by scaling the site design basis response spectrum, i.e., the Housner spectrum for 5% damping and anchored at 0.2g, by the appropriate horizontal and vertical soil amplification factors.

Since the Turbine Building is designated as a Class II structure in the UFSAR, no soil amplification provisions were originally specified and no dynamic seismic analysis results were available to define seismic demand on the structure or components. It was determined that the soil amplification factors for the DGBs would be most representative for the Turbine Building. The foundation materials are similar as are the foundation depths. In addition, the DGB horizontal soil amplification factor of 1.6 is known to be conservative, so this conservatism will

be extended to the specification of the seismic demand for the equipment in the Turbine Building for the seismic evaluation. The primary foundation difference is that the Turbine Building is supported on steel H-piles to bedrock. However, it is considered that the primary effect of the pile foundation would be to increase the foundation stiffness in the vertical direction relative to a similar foundation without piles. Therefore, the horizontal soil amplification for the Turbine Building would have a more significant effect than that of the vertical in the overall seismic verification efforts. Accordingly, seismic demand for equipment in the Turbine Building and for the seismic assessment of components is based on the same horizontal soil amplification factor of 1.6 and vertical soil amplification factor of 1.1 as was used for the DGBs. These factors were used to scale the BFN design basis DBE response spectrum (0.2g Housner spectrum, 5% damping) to determine seismic demand.

The Turbine Building houses the main turbines, generators, condensers, other auxiliary systems and balance-of-plant systems, and related piping. It is a reinforced concrete structure below the operating floor, elevation 617 feet, and is supported on steel H-piles. The turbine foundation is separated from the rest of the Turbine Building foundations and frames by means of a one inch expansion joint. The steel super-structure above elevation 617 feet is framed by transverse welded steel rigid frames which span approximately 107 feet. An expansion joint is provided between a two-bay frame for the first two units and a single bay frame for Unit 3.

Rolled shapes, plates, and bars used for structural steel are in accordance with ASTM A36. ASTM A325 bolts were used for field structural bolt connections. For welding, E70XX electrodes were used. The steel super-structure frames are braced to provide rigidity in the direction of the Reactor Building and provide support for the turbine cranes as well as the elaborate girt system. Frames are designed with fixed bases to resist lateral forces from the overhead cranes and wind loads due to 100 mile per hour wind in addition to supporting the vertical dead and live loads. The design of the steel super-structure is based on American Institute of Steel Construction (AISC) "Manual of Steel Construction", 6th Edition.

The compressive strength of the structural concrete is 3000 psi at 28 days cure time except that turbine building columns are 4000 psi. For evaluation/reanalysis of the structure, long-term concrete strength gain may be used. Reinforcing steel used is in accordance with ASTM A432. Grade 60 or ASTM A615 with $fy = 60{,}000$ psi and $E = 29 \times 10^6$ psi. Beams and slabs have been designed by American Concrete Institute (ACI) working stress methods and columns designed by working stress method, and checked by ACI ultimate strength design method using a load factor of 1.8.

Where masonry walls exist in the Turbine Building, they are generally used as removable shield walls or non-load bearing partition walls. Since non-reinforced

masonry walls do not perform well during seismic events, masonry walls were specifically reviewed during the seismic verification walkdowns. Resolution of any masonry wall outliers typically focuses on relocating the ALT path components outside the potential zone of influence of the masonry wall.

Performance of the Turbine Building and other non-seismic structures during a seismic event is relevant to the modeling of MSIV leakage, only to the extent that the building structure and its internal components survive and not degrade the capabilities of the ALT pathway and condenser. The NEDC-31858P-A survey of this type of industrial structure has, in general, confirmed that excellent past seismic performance exists. There are no known cases of structural collapse of either turbine buildings at power stations or structures of a similar construction.

Based on the above design bases for the BFN Turbine Building, and the excellent seismic performance of similar types of industrial structures in past strong-motion earthquakes as documented in NEDC-31858P-A, it was determined that the BFN Turbine Building will remain structurally intact following a DBE. Additional discussions of the seismic assessment of the Turbine Building is included in Attachment A, Section 4.3, of the Seismic Evaluation Report (TVA Calculation CDN0 001 99 0113 provided in Enclosure 2 of the July 2, 2004 letter). Table 4-7 of the report summarizes the design basis of the BFN Turbine Building and the applicable design codes used.

4.7 Seismic Analysis of the Condenser

Note: Changes to the technical content in this section have been made since this was initially published in the July 9, 2004 (Reference 2) letter. The changes are highlighted, with a line drawn through the deleted information and a double underline for new or revised information.

The BFN condensers consist of three single-pass, single pressure, radial flow type surface condensers. Each condenser is located beneath each of the three low pressure turbines, and is structurally independent. ~~Attachment A, Table 4-8, of the Seismic Evaluation Report~~ Enclosure 2 (Calculation CDN1-000-2004-0041), Table 5-1 lists the design data for the BFN condensers and an earthquake experience database site listed in the NEDC-31858P-A. In addition, design characteristic comparisons of the BFN condensers with the selected database condensers are shown in ~~Figures 4-2 through 4-5~~ Figures 5-1 through 5-4. The BFN condenser design data is comparable to the data for the database site. The BFN condensers were also evaluated for structural integrity subject to seismic DBE loads ~~(Attachment B of the Seismic Evaluation Report)~~ (Calculation CDN1-000-2004-0041). Results of the evaluation indicate that the condenser shell stresses are small. Maximum stress ratios, based on AISC allowables, are 0.12 for combined axial and bending and 0.10 for shear.

The condenser support anchorage consists of a center key and six support feet that are arranged as shown in ~~Attachment A, Figure 4-6 of the Seismic Evaluation Report~~ Section 6 of calculation CDN1-000-2004-0041. The center support is a fixed anchor and consists of a built-up wide flange H section embedded 4 feet into the concrete pedestal, which is connected to the Turbine Building base mat and welded to the bottom plate of the condenser. The support plates consist of 2 to 3 anchors of 2 to 2-1/2-inch diameter bolts. Each anchor bolt has greater than 5 feet nominal length with approximately 48-inches of embedment into the concrete pedestal, which is connected to the Turbine Building base mat. These supports are designed to resist vertical operating loads and are slotted radially from the center key to allow for thermal growth. Shear forces are transferred to the wide flange shaped anchor in the center and to the anchor bolts and shear keys to the support feet and carried through the concrete pedestal to the Turbine Building base mat.

The anchorage for the BFN condenser is comparable with the performance of the anchorages for similar condensers in the earthquake experience database. The shear areas of the condenser anchorage, in the directions parallel and transverse to the turbine generator axis, divided by the seismic demand, were used to compare with those presented in NEDC-31858P-A, and are shown in ~~Attachment A, Figures 4-7 and 4-8 of the Seismic Evaluation Report, respectively~~ Figures 6-3 and 6-4 of the calculation CDN1-000-2004-0041. The BFN condenser anchorage shear area to seismic demand is substantially greater than the selected database sites. The condenser support anchorage was also evaluated and the results indicate that the combined seismic DBE and operational demand are less than the anchorage capacity based on the AISC allowables. Maximum stress ratios are ~~0.70~~ 0.57 for bolt tension in the perimeter support feet and ~~0.86~~ 0.95 for shear in the center support built-up section.

The above comparisons of the condenser seismic experience data and the anchorage capacity evaluations demonstrate that the conclusions presented in the NEDC-31858P-A, can be applied to the BFN condensers. That is, a significant failure of the condenser in the event of a DBE at BFN is highly unlikely and contrary to the large body of historical earthquake experience data.

To provide additional assurance that the BFN condensers would maintain structural integrity, a specific analysis was performed on the condenser subject to BFN seismic demand. Results of the analyses demonstrated that the condenser shell stresses are small, with maximum stress ratios based on, AISC allowables of 0.12 for combined axial and bending and 0.10 for shear (Reference Attachment A, Section 4.4, of the Seismic Evaluation Report). Additionally, the condenser anchorage was also compared with the performance of condensers of the database site. The anchorage was demonstrated to be acceptable by seismic experience and by analytical methods. Maximum stress ratios from the condenser support anchorage evaluation including BFN seismic demand, based on AISC allowables, are ~~0.70~~ 0.57 for bolt tension in the perimeter support feet

and ~~0.86~~ 0.95 for shear in the center support built-up section. Based on the above, it was concluded that the BFN condensers were acceptable.

References:

1. TVA letter to NRC Dated September 28, 1999: "Browns Ferry Nuclear Plant (BFN) – Units 2 and 3 – Technical Specifications (TS) Change TS-399 – Increased Main Steam Isolation Valve (MSIV) Leakage Rate Limits and Exemption From 10 CFR 50 Appendix J."

2. TVA letter to NRC dated July 9, 2004: "Unit 1 – Technical Specification (TS) 436 – Increased main Steam Isolation Valve (MSIV) Leakage Rate Limits and Exemption From 10 CFR 50, Appendix J."

3. TVA Letter to NRC Dated February 4, 2000: "Browns Ferry Nuclear Plant (BFN) – Units 2 and 3 Response to Request for Additional Information Regarding Technical Specifications (TS) Change N0. 399 – Increased Main Steam Isolation Valve (MSIV) Leakage Rate Limits and Exemption from 10 CFR 50 Appendix J – Revised TS pages for Increased MSIV Leakage Limits – (TAC Nos. MA6405, MA6406, MA6815 and MA6816)."

4. NRC letter to the BWROG Dated March 3, 1999: "Safety Evaluation of GE Topical Report, NEDC-31858P, Revision 2, BWROG Report for Increased MSIV Leakage Limits and Elimination of Leakage Control Systems, September 1993."
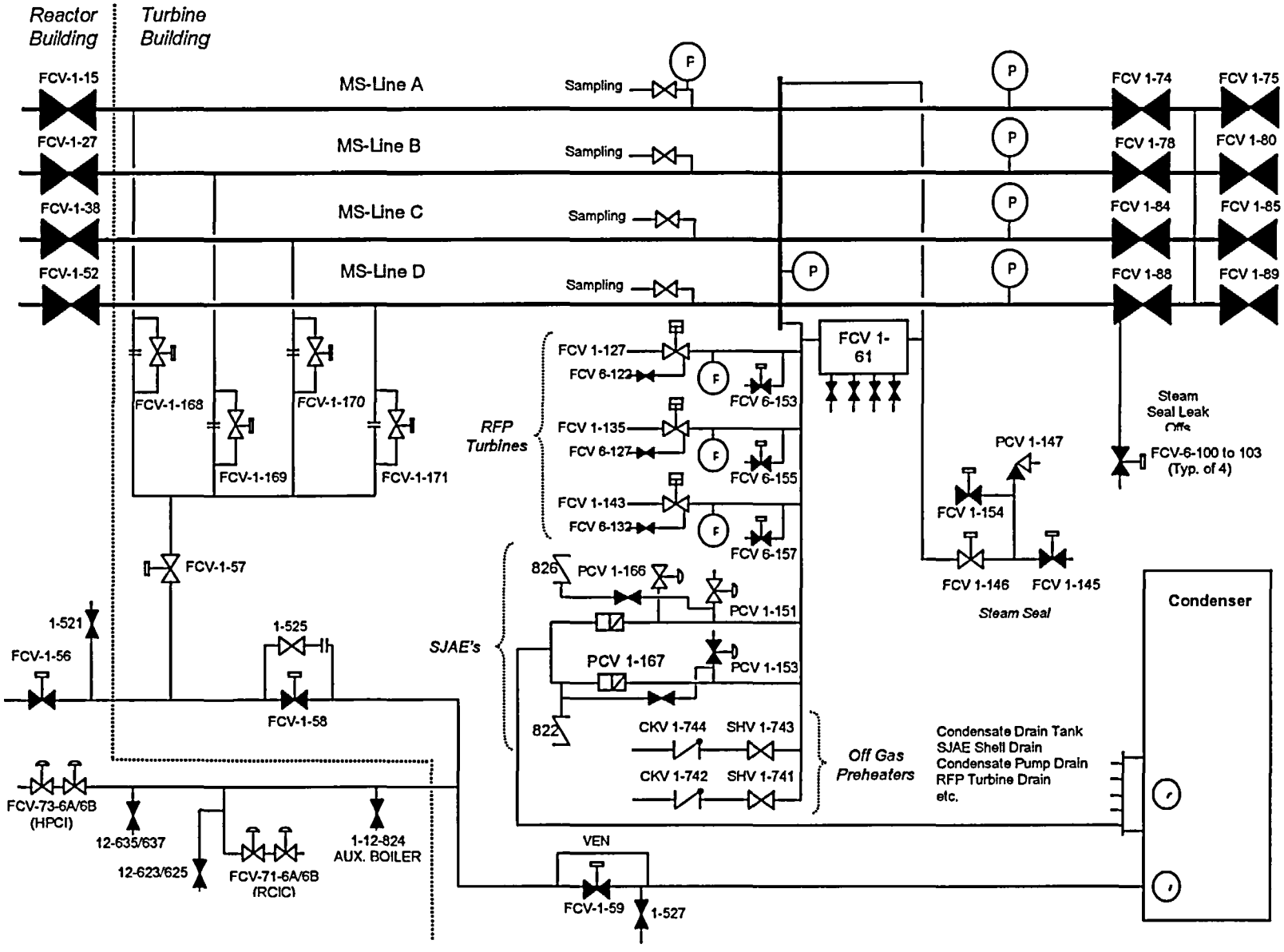
FIGURE 1
BFN UNIT 1 MSIV SEISMIC VERIFICATION WALKDOWN BOUNDARY