Spent Fuel Transportation Cask Response to a Tunnel Fire Scenario

Christopher S. Bajwa, PE
Harold S. Adkins
Judith M. Cuta

PATRAM 2004
SEPTEMBER 20-24, 2004

Introduction

- Baltimore Tunnel Fire Event
- Howard Street Tunnel Fire Model
- Spent Fuel Transportation Cask Analyses
- Results/Conclusions

Baltimore Tunnel Fire, July 18, 2001

NIST Howard Street Tunnel Fire Model

- Fire Dynamics Simulator (FDS)
  - Computational Fluid Dynamics (CFD)
- Validated Against Test Data
  - Memorial Tunnel Fire Test Program
- Full 3D Tunnel Model
  - Included Railcars

NIST Howard Street Tunnel Fire Model

FDS Temperature Results

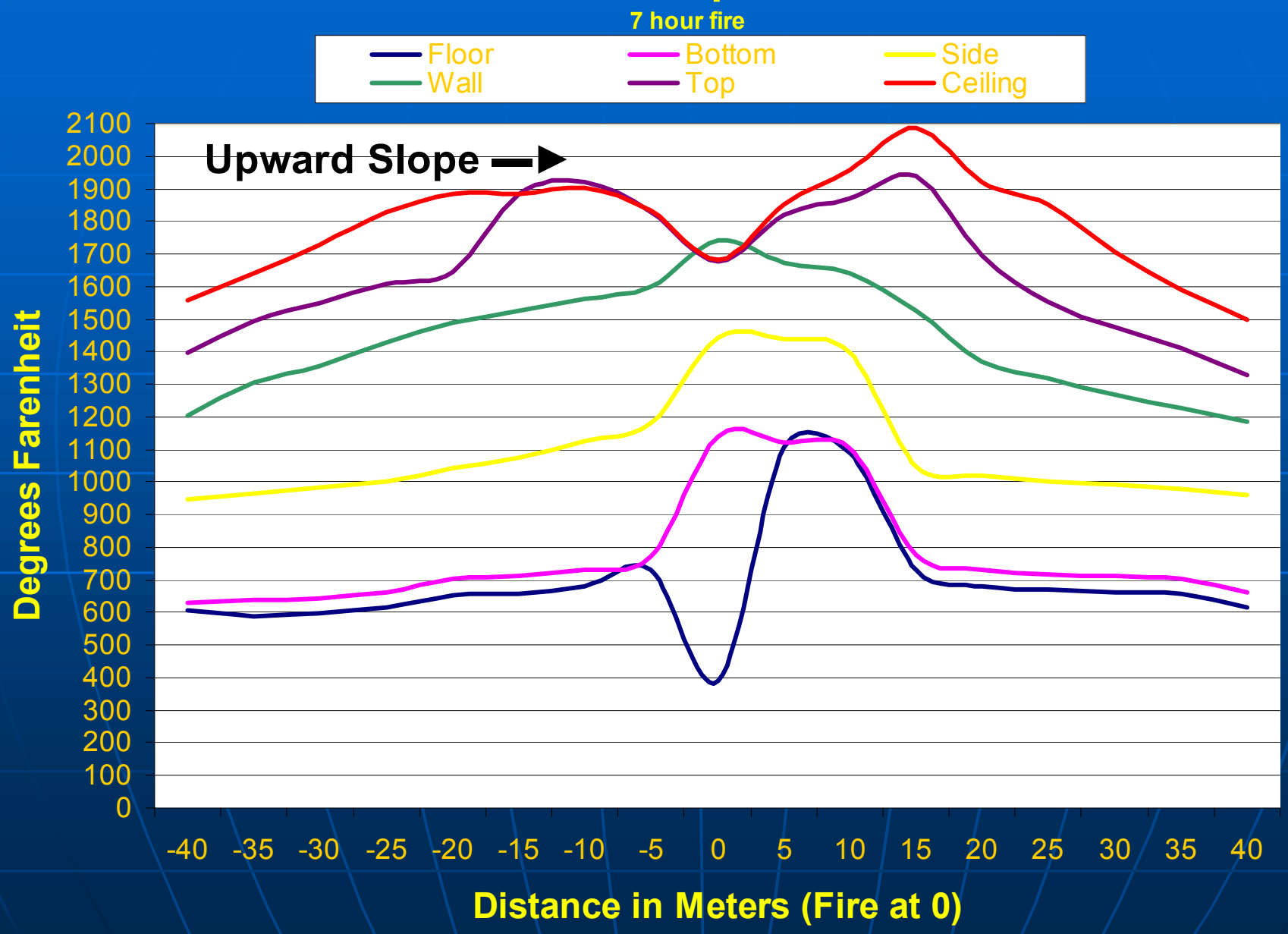

HOLTEC HI-STAR 100 Cask

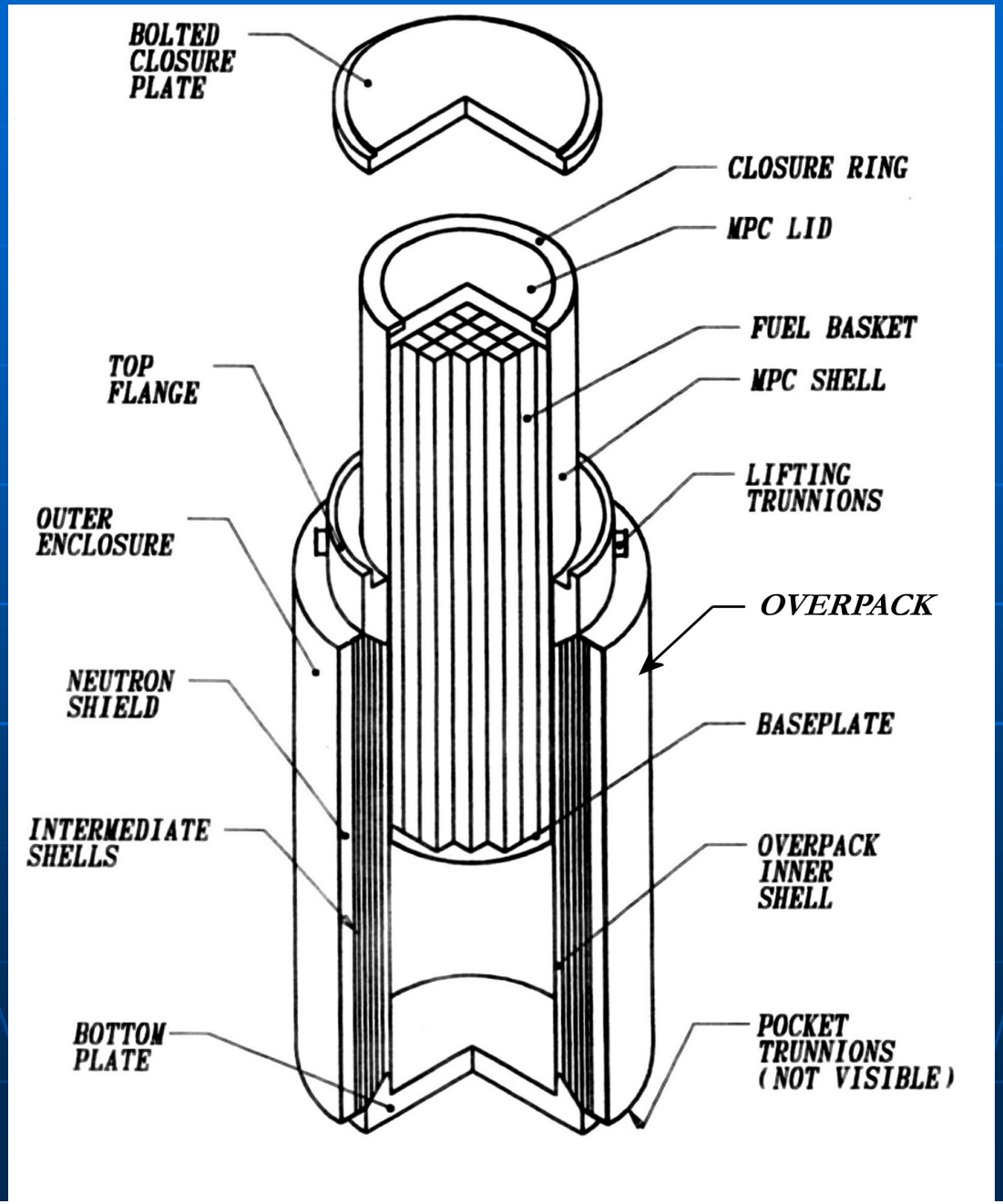

HI-STAR 100 Rail Cask

TN-68 Spent Fuel Cask

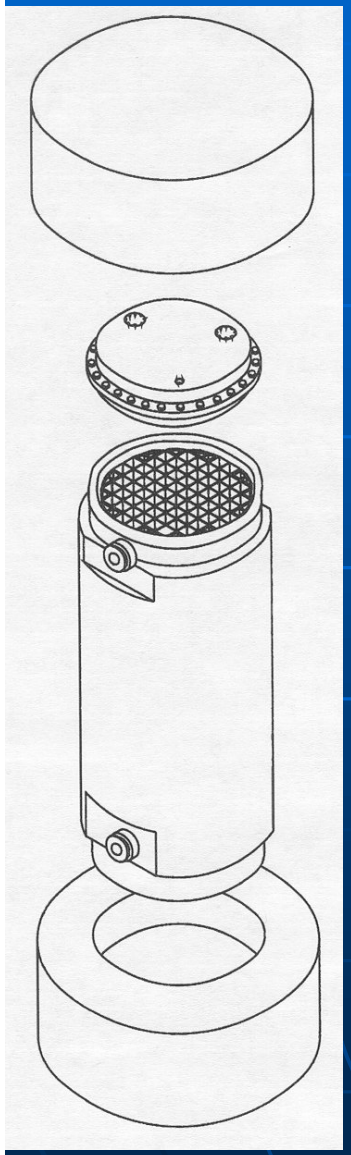

Cask Analysis Model Details

- HI-STAR 100 Spent Fuel Cask
  - Model Developed in ANSYS®
  - 3D half symmetry
  - Explicit geometry representation
  - Fuel assemblies homogenized
  - Conduction, convection, and radiation
  - Cask transport cradle included
  - Tunnel walls included
  - Model contains over 149,000 elements

Cask Analysis Model Details, cont.

- TransNuclear (TN) 68 Spent Fuel Cask
  - Model Developed in COBRA-SFS
  - 3D half symmetry
  - Explicit geometry representation
  - Fuel assemblies explicitly modeled
  - Conduction, convection, and radiation
  - Tunnel walls included
  - Model contains approximately 139,000 nodes

HI-STAR 100 Analysis Model (with Tunnel Walls)

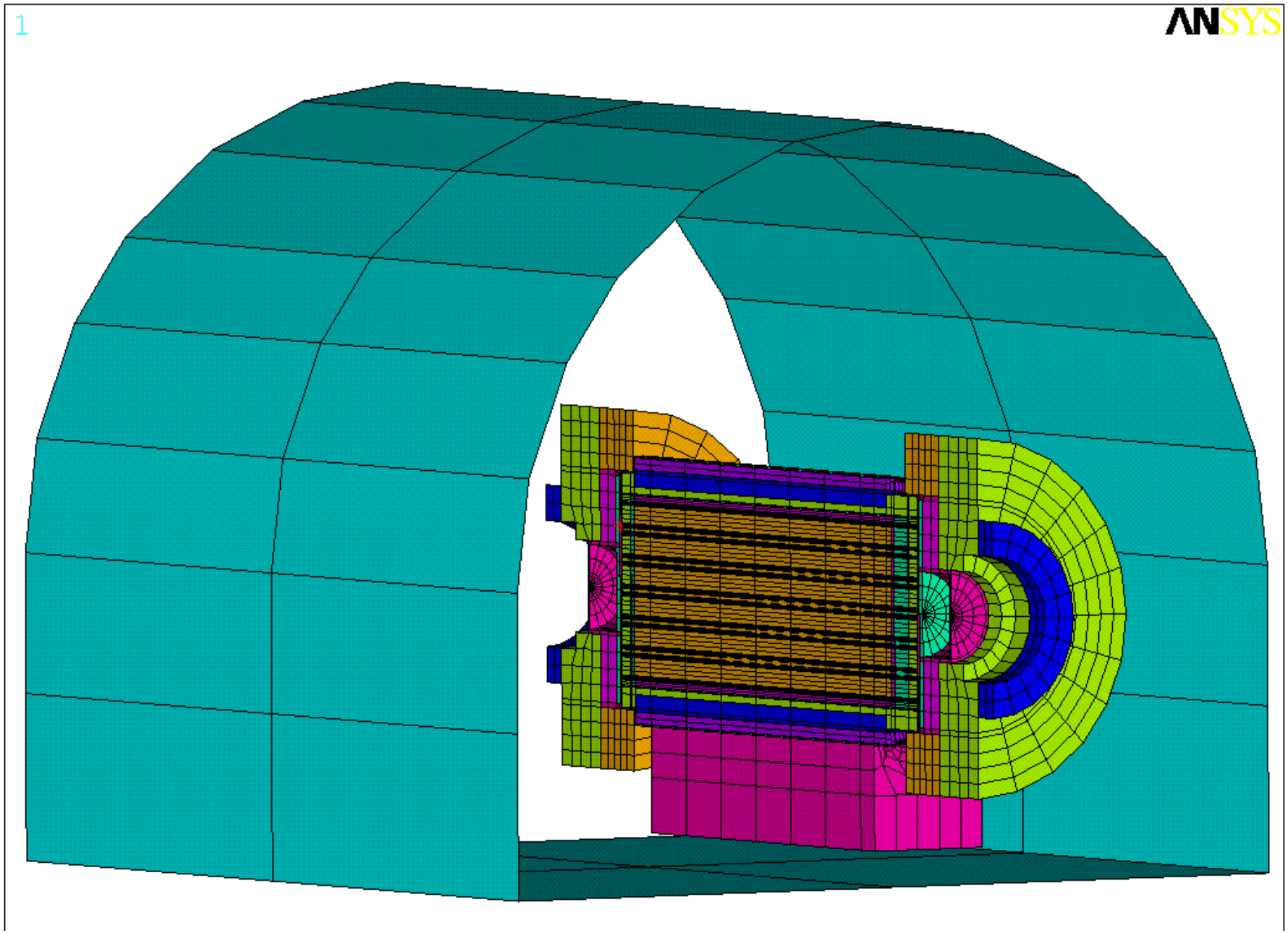

HI-STAR 100 Element Plot – (No Fill Gas)

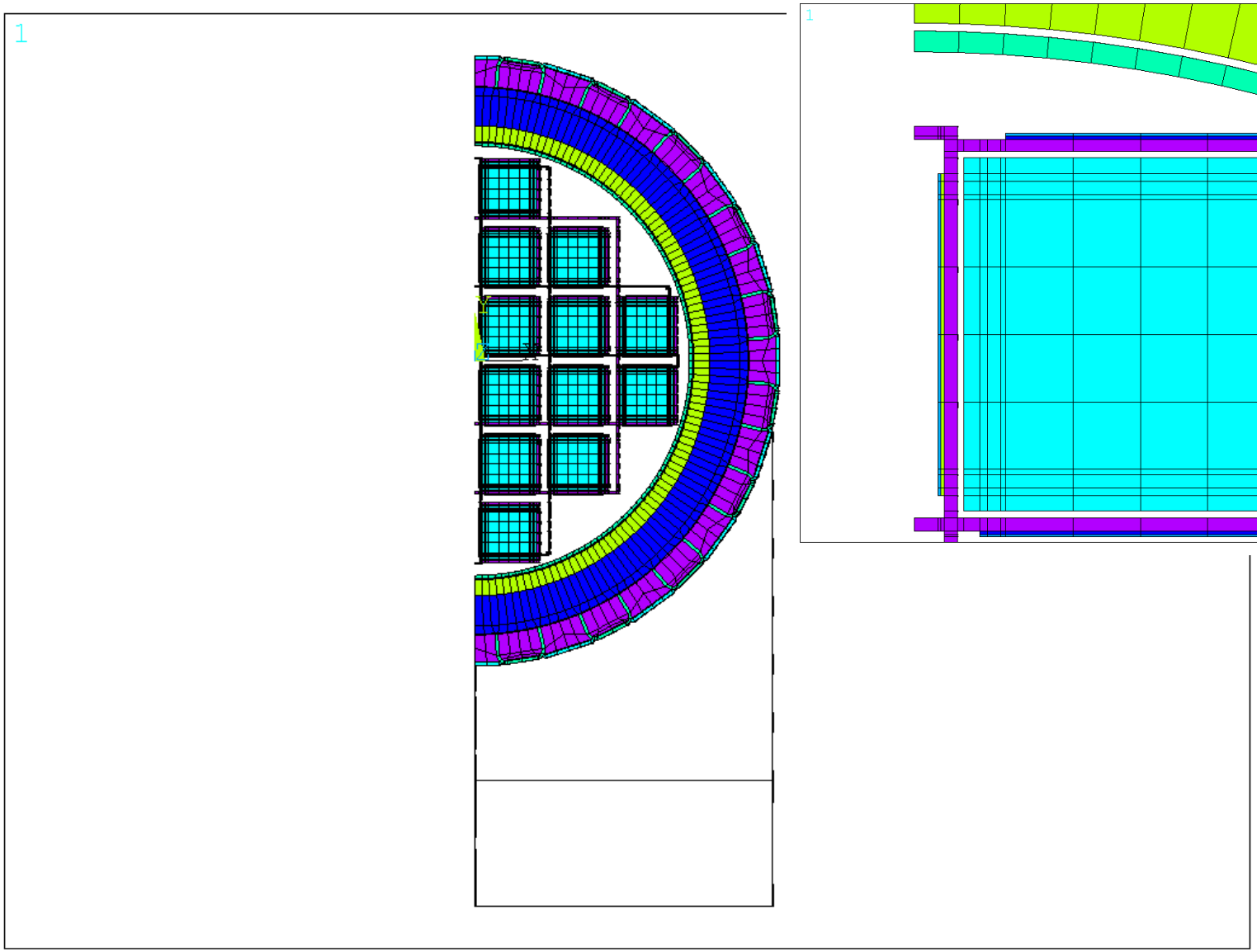

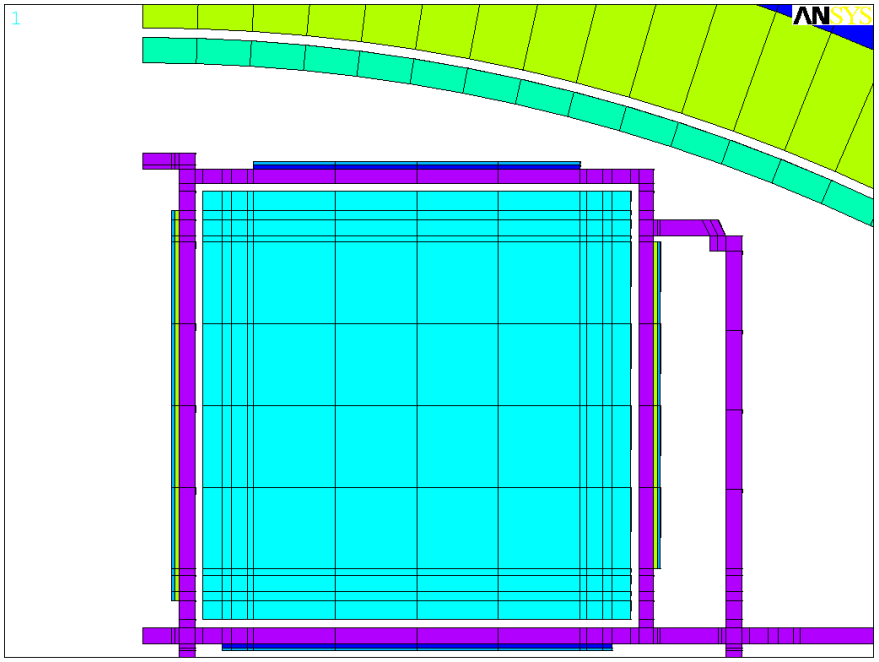

HI-STAR 100 model with Impact Limiter Shells

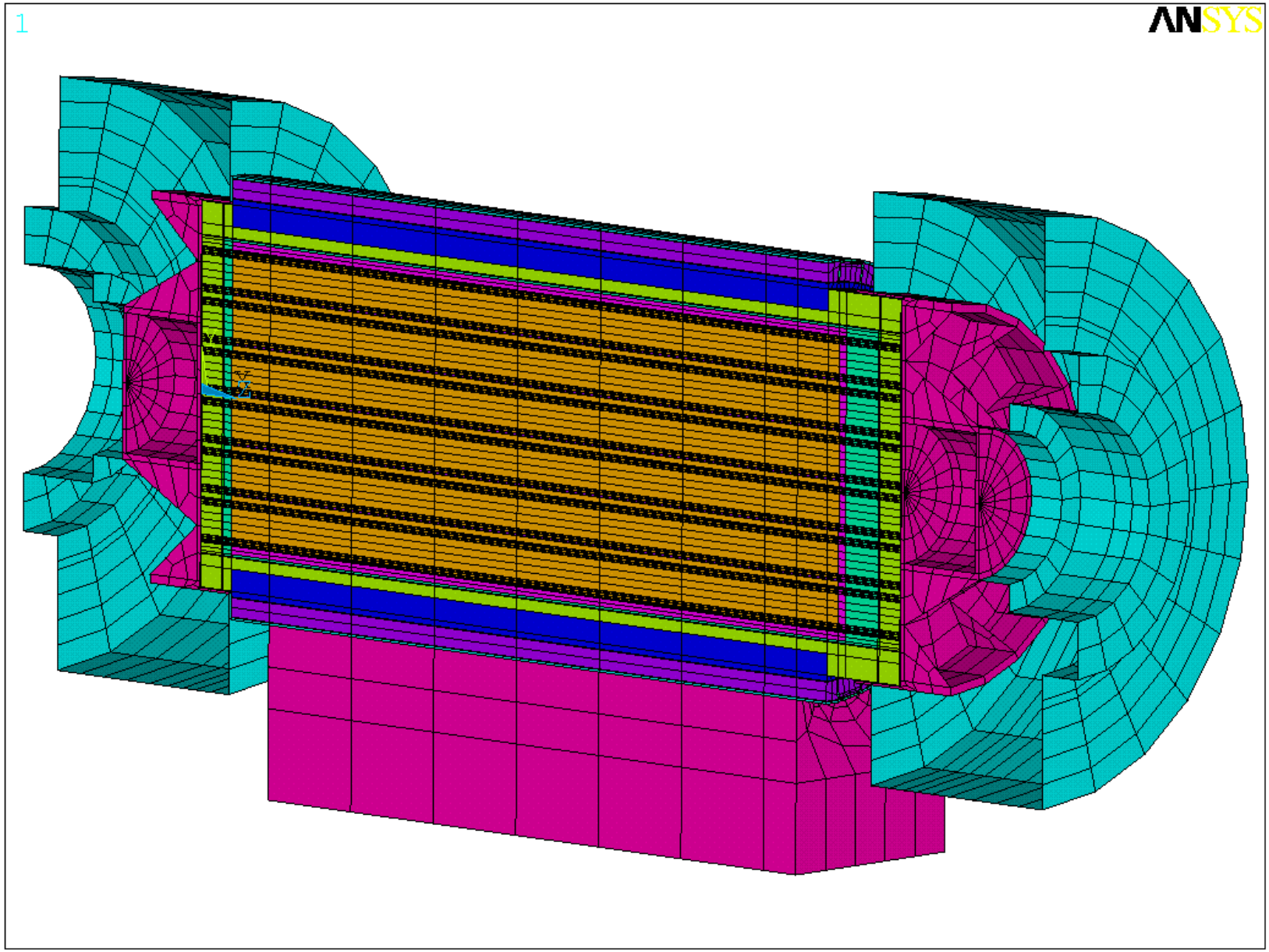

COBRA-SFS Node map for TN-68

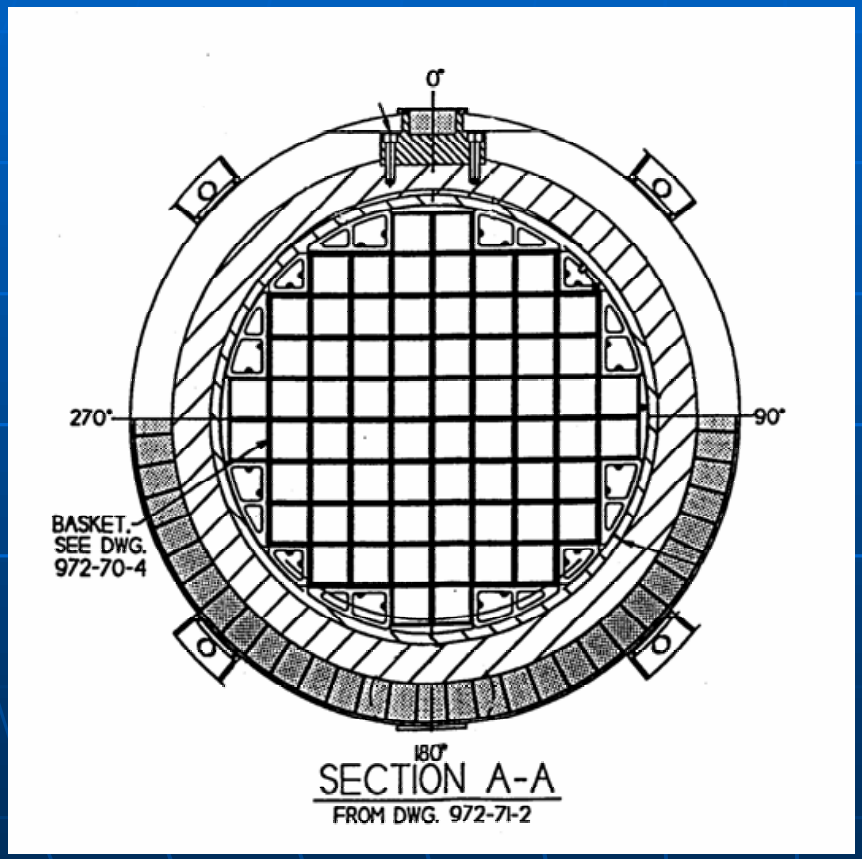

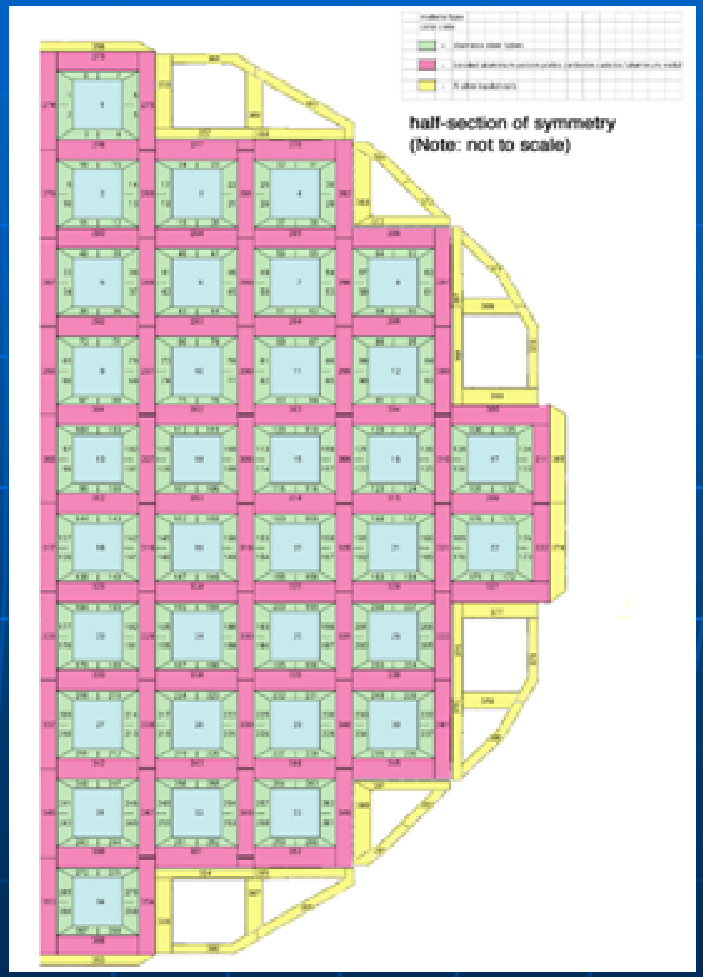

Pre-Fire Analysis Conditions

- Equivalent to Normal Conditions of Transportation (NCT) in 10 CFR 71.71
  - Ambient Temperature 38°C (100°F)
  - Full Solar Insolation
  - Cask Surface Emmissivities: 0.3 for Stainless Steel, 0.85 for painted surfaces
- Maximum decay heat applied
  - TN-68 - 21.2 kW
  - HI-STAR 100 - 20 kW
- Steady state temperature solution obtained

HI-STAR 100 Temperature Plot (Pre-Fire Conditions)

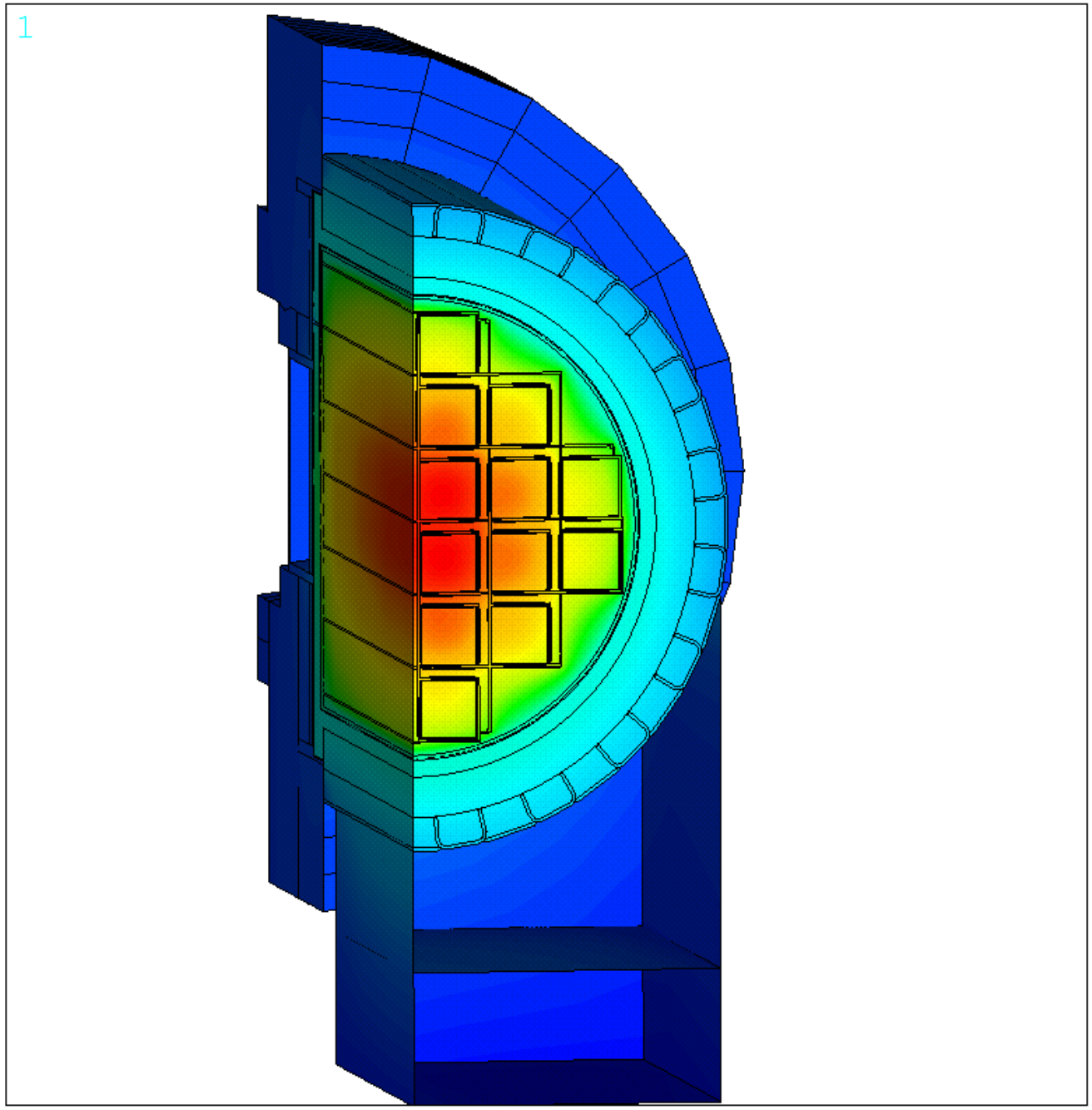

ANSYS 8.0
APR 1 2004
15:53:37
NODAL SOLUTION
STEP=10
SUB =1
TIME=.100E-02
TEMP (AVG)
RSYS=0
PowerGraphics
EFACET=1
AVRES=Mat
SMN =131.831
SMX =672.799

- 131.831
- 165.642
- 195.226
- 229.036
- 258.62
- 292.431
- 322.015
- 355.826
- 385.41
- 419.22
- 448.804
- 482.615
- 512.199
- 546.01
- 575.594
- 609.404
- 638.988
- 672.799

Fire Boundary Conditions

- Applied NIST Calculated Temperature and Flow Conditions
- Center of Cask Located 20 Meters from Fire Source
- 7 Hour Fire plus 23 Hour Cooldown (30 Hours total)
- Temperatures Extrapolated Using Power Function ($30<t<300$ hours)

HI-STAR 100 Cask Component Temperature Plot

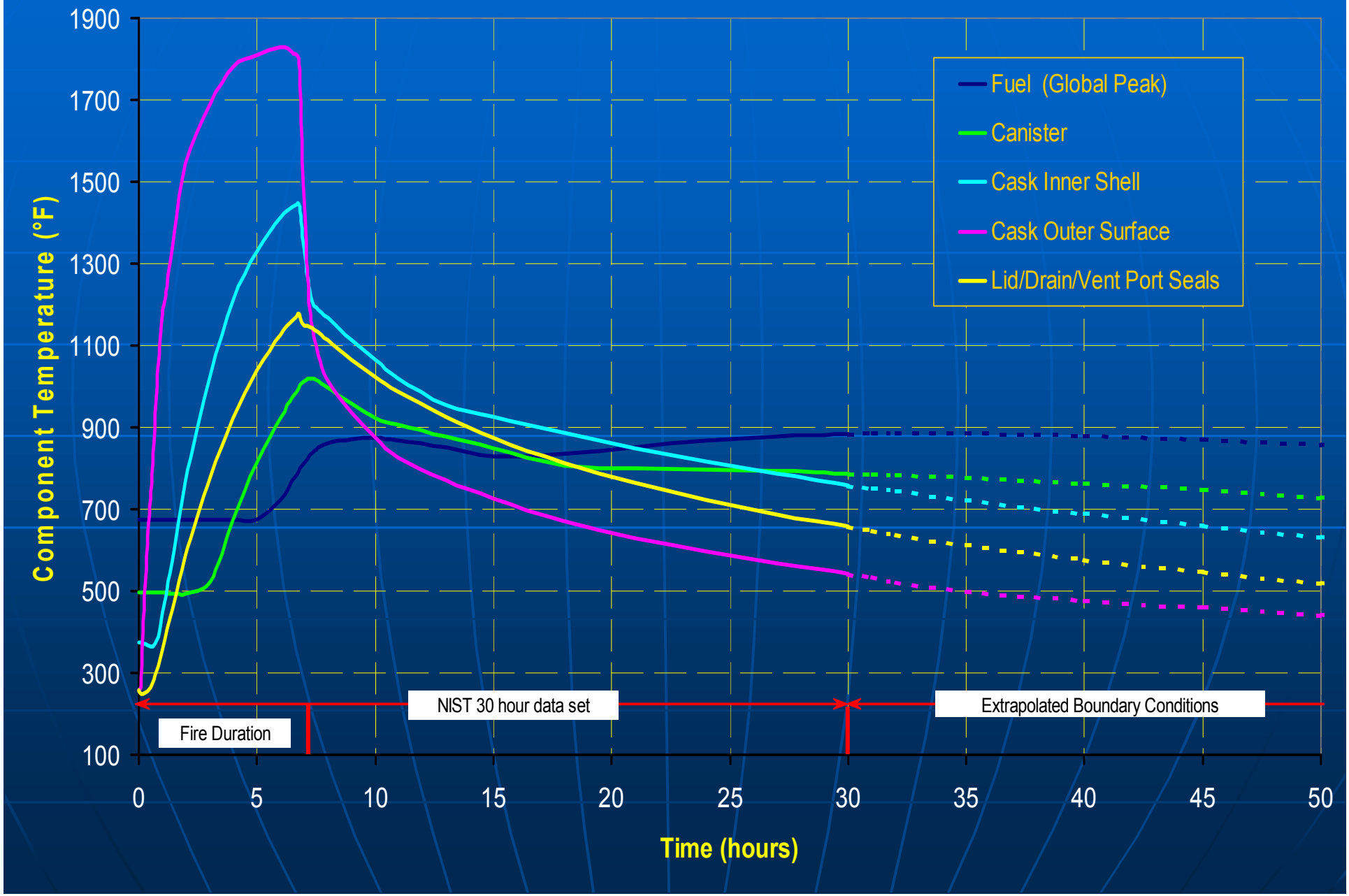

TransNuclear-68 Cask Component Temperature Plot

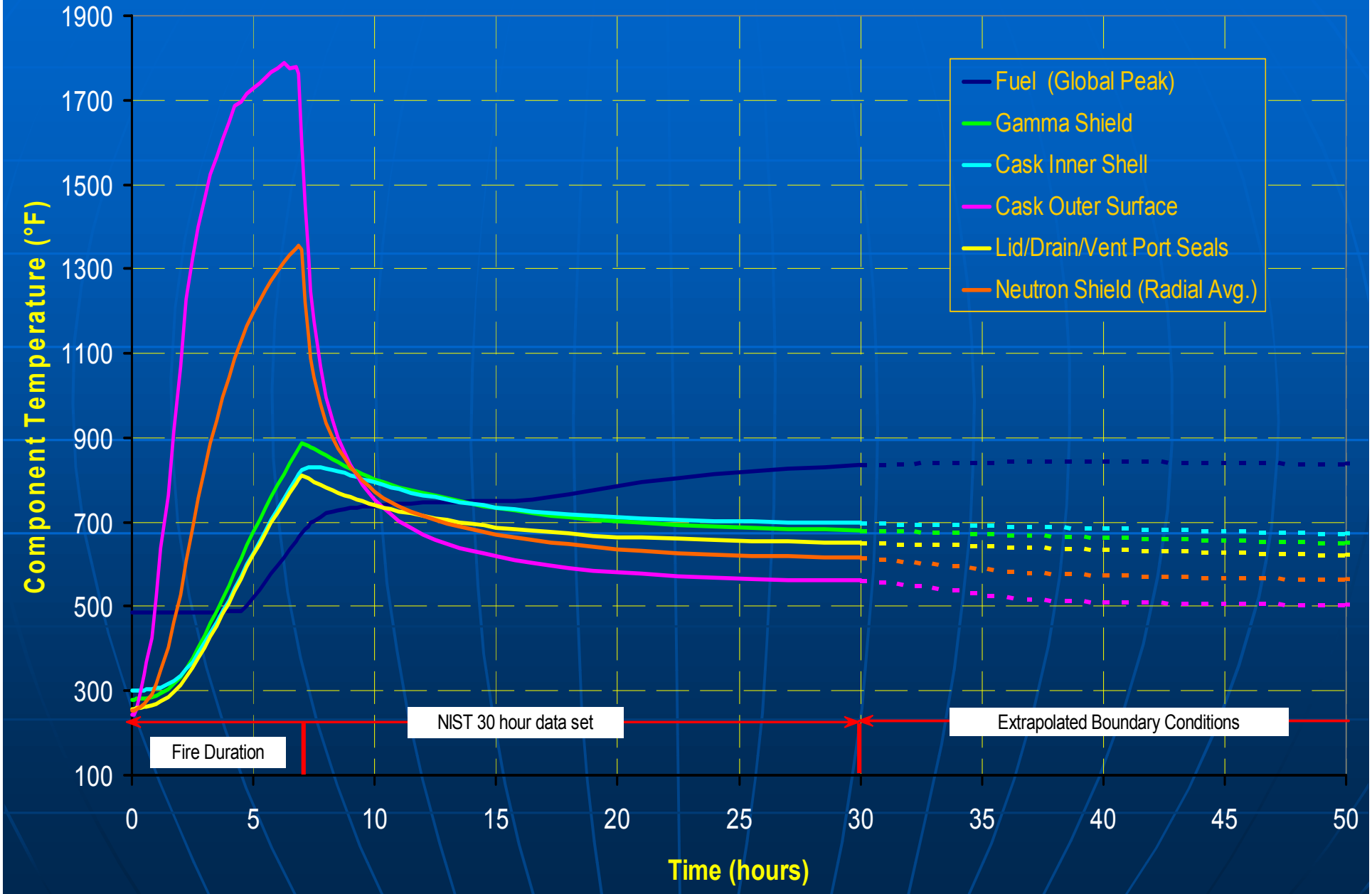

Results from Cask Analysis

- Maximum Spent Fuel Cladding Temperatures:
  - HI-STAR 100: 887°F
  - TN-68: 845°F
- No Fuel Cladding Failure Expected
- No Failure of the Multi-Purpose Canister (MPC) Expected for HI-STAR 100
- No Seal Failure Expected for the TN-68 (Max seal Temperature 811°F)

Conclusions

- Robust Nature of Rail Casks is Evident
- Fire Exposure Results in No Release of Radioactive Material
- Health and Safety of the Public is Protected