SYSTEM FILE NO. 3020, 3050
CALC. TYPE ID IE
PRIORITY 0

CAROLINA POWER & LIGHT COMPANY

CALCULATION # RNP-I/INST-1041

FOR

Feedwater Flow Loop Uncertainty and Scaling Calculation

FOR

H. B. ROBINSON UNIT 2

	YES	NO
SAFETY RELATED :	☒	☐
AUGMENTED QUALITY:	☐	☒
NON SAFETY :	☐	☒

APPROVAL

REV. NO.	PREPARED BY DATE	REVIEWED BY DATE	CROSS DISCIPLINE REVIEW BY DISCIPLINE / DATE	SUPERVISOR DATE
1	Signature on File	Signature on File		
REASON FOR CHANGE:				
2	Signature on File	Signature on File		
REASON FOR CHANGE:				
3	W. Robert Smith 8/28/02	R.A. Hunter 8-29-02	Tom Hokeneyer for 9/13/02 T. Hokeneyer	T.L. Simpson 9/13/02
REASON FOR CHANGE: See Page 4.				

Table of Contents

SEC DESCRIPTION PAGE

REVISION HISTORY 4
1.0 OBJECTIVE 5
2.0 FUNCTIONAL DESCRIPTION 6
2.1 NORMAL FUNCTION 6
2.2 ACCIDENT MITIGATING FUNCTION 6
2.3 POST ACCIDENT MONITORING FUNCTION 6
2.4 POST SEISMIC FUNCTION 7
3.0 LOOP DIAGRAM 7
4.0 REFERENCES 9
4.1 DRAWINGS 9
4.2 CALCULATIONS 9
4.3 REGULATORY DOCUMENTS 9
4.4 TECHNICAL MANUALS 9
4.5 CALIBRATION AND MAINTENANCE PROCEDURES 10
4.6 PROCEDURES 10
4.7 OTHER REFERENCES 10
5.0 INPUTS AND ASSUMPTIONS 11
6.0 CALCULATION OF UNCERTAINTY CONTRIBUTORS 23
6.1 ACCIDENT EFFECTS (AE) 23
6.2 SEISMIC EFFECT (SE) 23
6.3 INSULATION RESISTANCE ERROR (IR) 24
6.4 PROCESS MEASUREMENT ERROR (PME) 24
6.4.1 Process Measurement Error - Normal Environment 24
6.4.2 Process Measurement Error - Accident Environment 26
6.5 PRIMARY ELEMENT ERROR (PE) 26
6.6 TRANSMITTER (FT-497, ROSEMOUNT 1153HA5) 28
6.6.1 Transmitter's Unverified Attributes of Reference Accuracy (RA_{xmtr}) 28
6.6.2 Transmitter Calibration Tolerance (CAL_{xmtr}) 29
6.6.3 Transmitter Drift (DR_{xmtr}) 29
6.6.4 Transmitter M&TE Effect (MTE_{xmtr}) 29
6.6.5 Transmitter Temperature Effect (TE_{xmtr}) 30
6.6.6 Transmitter Static Pressure Effect (SPE_{xmtr}) 30
6.6.7 Transmitter Power Supply Effect (PSE_{xmtr}) 31
6.6.8 Transmitter Total Device Uncertainty (TDU_{xmtr}) 31
6.6.9 Transmitter As Found Tolerance (AFT_{xmtr}) 31
6.6.10 Transmitter As Left Tolerance (ALT_{xmtr}) 32
6.7 TRANSMITTER (FT-477 AND FT-487, ROSEMOUNT 1153DA5) 33
6.7.1 Transmitter's Unverified Attributes of Reference Accuracy (RA_{xmtr}) 33
6.7.2 Transmitter Calibration Tolerance (CAL_{xmtr}) 33

6.7.3 Transmitter Drift (DR_{xmtr}) 33
6.7.4 Transmitter M&TE Effect (MTE_{xmtr}) 34
6.7.5 Transmitter Temperature Effect (TE_{xmtr}) 34
6.7.6 Transmitter Static Pressure Effect (SPE_{xmtr}) 35
6.7.7 Transmitter Power Supply Effect (PSE_{xmtr}) 35
6.7.8 Transmitter Total Device Uncertainty (TDU_{xmtr}) 35
6.7.9 Transmitter As Found Tolerance (AFT_{xmtr}) 36
6.7.10 Transmitter As Left Tolerance (ALT_{xmtr}) 36
6.8 TRANSMITTER (FT-476, FT-486 AND FT-496, ROSEMOUNT 1151DP5) 37
6.8.1 Transmitter's Unverified Attributes of Reference Accuracy (RA_{xmtr}) 37
6.8.2 Transmitter Calibration Tolerance (CAL_{xmtr}) 37
6.8.3 Transmitter Drift (DR_{xmtr}) 37
6.8.4 Transmitter M&TE Effect (MTE_{xmtr}) 38
6.8.5 Transmitter Temperature Effect (TE_{xmtr}) 38
6.8.6 Transmitter Static Pressure Effect (SPE_{xmtr}) 39
6.8.7 Transmitter Power Supply Effect (PSE_{xmtr}) 39
6.8.8 Transmitter Total Device Uncertainty (TDU_{xmtr}) 40
6.8.9 Transmitter As Found Tolerance (AFT_{xmtr}) 40
6.8.10 Transmitter As Left Tolerance (ALT_{xmtr}) 41
6.9 COMPARATOR MODULE 42
6.9.1 Comparator's Unverified Attributes of Reference Accuracy (RA_{comp}) 42
6.9.2 Comparator Calibration Tolerance (CAL_{comp}) 42
6.9.3 Comparator Drift (DR_{comp}) 42
6.9.4 Comparator M&TE Effect (MTE_{comp}) 43
6.9.5 Comparator Temperature Effect (TE_{comp}) 43
6.9.6 Comparator Power Supply Effect (PSE_{comp}) 43
6.9.7 Comparator Total Device Uncertainty (TDU_{comp}) 44
6.9.8 Comparator As Found Tolerance (AFT_{comp}) 44
6.9.9 Comparator As Left Tolerance (ALT_{comp}) 45
6.10 ISOLATOR MODULE 46
6.10.1 Isolator's Unverified Attributes of Reference Accuracy (RA_{isol}) 46
6.10.2 Isolator Calibration Tolerance (CAL_{isol}) 46
6.10.3 Isolator Drift (DR_{isol}) 46
6.10.4 Isolator M&TE Effect (MTE_{isol}) 47
6.10.5 Isolator Temperature Effect (TE_{isol}) 47
6.10.6 Isolator Power Supply Effect (PSE_{isol}) 48
6.10.7 Isolator Total Device Uncertainty (TDU_{isol}) 48
6.10.8 Isolator As Found Tolerance (AFT_{isol}) 48
6.10.9 Isolator As Left Tolerance (ALT_{isol}) 49
6.11 SQUARE ROOT MODULE 50
6.11.1 Square Root Module's Unverified Attributes of Reference Accuracy (RA_{sqrt}) 50
6.11.2 Square Root Module Calibration Tolerance (CAL_{sqrt}) 50
6.11.3 Square Root Module Drift (DR_{sqrt}) 50
6.11.4 Square Root Module M&TE Effect (MTE_{sqrt}) 51

6.11.5 Square Root Module Temperature Effect (TE_{sqrt}) 51
6.11.6 Square Root Module Power Supply Effect (PSE_{sqrt}) 51
6.11.7 Square Root Module Total Device Uncertainty (TDU_{sqrt}) 52
6.11.8 Square Root Module As Found Tolerance (AFT_{sqrt}) 52
6.11.9 Square Root Module As Left Tolerance (ALT_{sqrt}) 53
6.12 INDICATOR 54
6.12.1 Indicator's Unverified Attributes of Reference Accuracy (RA_{ind}) 54
6.12.2 Indicator Calibration Tolerance (CAL_{ind}) 54
6.12.3 Indicator Drift (DR_{ind}) 54
6.12.4 Indicator M&TE Effect (MTE_{ind}) 55
6.12.5 Indicator Temperature Effect (TE_{ind}) 55
6.12.6 Indicator Power Supply Effect (PSE_{ind}) 55
6.12.7 Indicator Readability (RD_{ind}) 56
6.12.8 Indicator Total Device Uncertainty (TDU_{ind}) 56
6.12.9 Indicator As Found Tolerance (AFT_{ind}) 56
6.12.10 Indicator As Left Tolerance (ALT_{ind}) 57
6.13 RECORDER 58
6.13.1 Recorder's Unverified Attributes of Reference Accuracy (RA_{rec}) 58
6.13.2 Recorder Calibration Tolerance (CAL_{rec}) 58
6.13.3 Recorder Drift (DR_{rec}) 58
6.13.4 Recorder M&TE Effect (MTE_{rec}) 59
6.13.5 Recorder Temperature Effect (TE_{rec}) 59
6.13.6 Recorder Power Supply Effect (PSE_{rec}) 60
6.13.7 Recorder Readability (RD_{rec}) 60
6.13.8 Recorder Total Device Uncertainty (TDU_{rec}) 60
6.13.9 Recorder As-Found Tolerance (AFT_{rec}) 61
6.13.10 Recorder As Left Tolerance (ALT_{rec}) 61
7.0 TOTAL LOOP UNCERTAINTY (TLU) 62
7.1 TOTAL LOOP UNCERTAINTY - PLANT NORMAL 62
7.1.1 Total Loop Uncertainty - Input to ERFIS 62
7.1.2 Total Loop Uncertainty - Indicator FI-476, 477, 486, 487, 496, AND 497 63
7.1.3 Total Loop Uncertainty - Recorder FR-478, 488, AND 498 64
7.1.4 Total Loop Uncertainty - Comparators 65
7.2 TOTAL LOOP UNCERTAINTY - ACCIDENT 65
7.3 TOTAL LOOP UNCERTAINTY - POST SEISMIC 65
7.4 LOOP AS FOUND TOLERANCE 68
7.4.1 Loop As Found Tolerance - Indicator FI-476, 477, 486, 487, 496 AND 497 68
7.4.2 Loop As Found Tolerance - Recorder FR-478, 488 AND 498 69
7.4.3 Loop As Found Tolerance - Input to ERFIS 69
7.4.4 Loop As Found Tolerance - Comparators 70
7.5 GROUP AS FOUND TOLERANCE 71
7.5.1 Group As Found Tolerance - Indicator FI-476, 477, 486, 487, 496 AND 497 71
7.5.2 Group As Found Tolerance - Recorder FR-478, 488 AND 498 71
7.5.3 Group As Found Tolerance - Input to ERFIS 71

7.5.4 Group As Found Tolerance - Comparators 72
8.0 DISCUSSION OF RESULTS 73
8.1 IMPACT ON IMPROVED TECHNICAL SPECIFICATIONS 78
8.2 IMPACT ON UFSAR 78
8.3 IMPACT ON DESIGN BASIS DOCUMENTS 78
8.4 IMPACT ON OTHER CALCULATIONS 78
8.5 IMPACT ON PLANT PROCEDURES 79
9.0 SCALING CALCULATIONS 80
9.1 FLOW TRANSMITTER (FT-476, 477, 486, 487, 496 AND 496) 80
9.2 ISOLATOR MODULE (FM-476A, 476B, 477A, 477B, 486A, 486B, 487A, 487B, 496A, 496B, 497A, AND 497B) 88
9.3 COMPARATOR MODULE (FC-478A, 478B, 488A, 488B, 498A, AND 498B) 89
9.4 COMPARATOR MODULE (FC-478C, 478D, 488C, 488D, 498C, AND 498D) 90
9.5 SQUARE ROOT MODULE (FM-476, 477, 486, 487, 496, AND 497) 91
9.6 INDICATOR (FI-476, 477, 486, 487, 496, AND 497) 92
9.7 RECORDER (FR-478, 488, AND 498) 93

LIST OF ATTACHMENTS **PAGES**

Attachment A - Calculation Matrix	1
Attachment B - Comparator Drift	1
Attachment C - International Instruments Indicator Data	1
Attachment D - Rosemount Transmitter Drift	1

REVISION HISTORY

REVISION	DESCRIPTION OF CHANGE
1	Revised calculation to consider seismic uncertainties. The format of the calculation was revised to follow the calculation methodology presented in EGR-NGGC-0153.
2	Revised calculation to account for the change in feedwater flow as a result of the power uprate. Changed recorder to a Yokogawa VR204 to reflect changes made by EC 47208. This calculation provides input to EC 47152 & EC 47162.
3	Corrected errors in Section 7.3 (Feedwater Flow / Steam Flow Mismatch setpoint Total Loop Uncertainty) and revised Section 8.0 as needed.

1.0 OBJECTIVE

This calculation computes the loop uncertainties associated with the indication, recording, alarm, and trip functions provided by the Feedwater Flow instrumentation loops. The loops addressed in this calculation also provide input to the Emergency Response Facility Information System (ERFIS). Uncertainties at the input to the ERFIS are calculated. Uncertainties are calculated for normal and post-seismic event conditions only. This calculation develops the Reactor Protection System (RPS) setpoint associated with each instrument loop. This calculation also calculates the Allowable Value for the RPS setpoint addressed in this calculation. Uncertainties associated with the control functions provided by the Feedwater Flow loops are not calculated.

The instrument loops containing the following components are addressed in this calculation:

FT-476, 477, 486, 487, 496, 497
FQ-476, 477, 486
FQ-487, 496, 497
FM-476A/R, 476B/R
FM-477A/R, 477B/R
FM-486A/R, 486B/R
FM-496A/R, 496B/R
FM-476, 477, 486
FM-487, 496, 497
FC-478A, 478B, 478C
FC-478D, 488A, 488B
FC-488C, 488D, 498A FC-498B, 498C, 498D
FI-476, 477, 486
FI-487, 496, 497
F-476, 477, 486
F-487, 496, 497
FR-478, 488, 498
FM-476A, 476B, 477A
FM-477B, 486A, 486B
FM-487A, 487B, 496A
FM-496B, 497A, 497B

2.0 FUNCTIONAL DESCRIPTION

The Feedwater Flow channels are used for protection, feedwater control, recording, and indication. The feedwater control function is not considered in this calculation.

The instrument loops, which are the subject of this calculation, provide the following protective function:

- Steam Flow / Feedwater Flow Mismatch Reactor Trip

2.1 NORMAL FUNCTION

The Feedwater Flow loops provide indications of Feedwater Flow on indicators FI-476, 477, 486, 487, 496, and 497 in the main Control Room during normal operation. Feedwater flow is recorded by FR-478, 488, and 498. These loops provide input to ERFIS and feedwater control. These loops provide input for the alarms associated with feedwater flow > steam flow and steam flow > feedwater flow.

2.2 ACCIDENT MITIGATING FUNCTION

The instrument loops addressed by this calculation produce a Steam Flow / Feedwater Flow Mismatch Reactor Trip signal which is interlocked with the Steam Generator Low Level Reactor Trip function.

2.3 POST ACCIDENT MONITORING FUNCTION

Per Reference 4.6.2, the feedwater flow loops are designated as RG 1.97 Category D3 variable.

2.4 POST SEISMIC FUNCTION

Per Reference 4.7.12, the steam flow / feedwater flow mismatch function is required to operate following a seismic event. Therefore, seismic uncertainties are computed for this function.

3.0 LOOP DIAGRAM

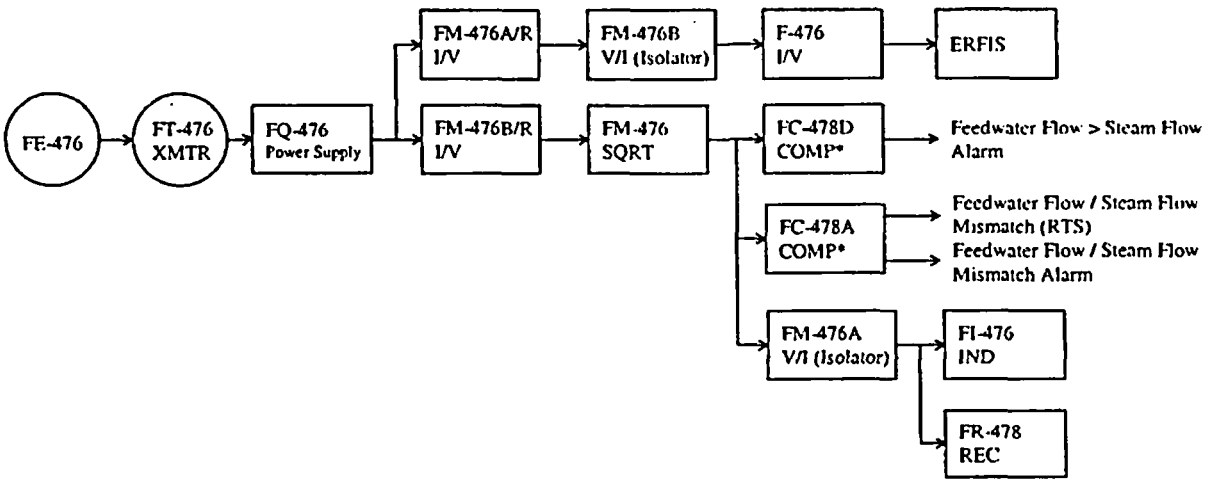

* Also receives an input from steam flow loop F-474. See Reference 4.2.3.
Note: Similar for F-477, 486, 487, 496, and 497

TAG NUMBER	FUNCTION	MAKE AND MODEL	LOCATION	REFERENCE
FT-476, 496, 486	Transmitter	Rosemount 1151DP5	Turbine Building	4.1.1-3, 4.7.4
FT-477, 487	Transmitter	Rosemount 1153DA5	Turbine Building	4.1.1-3, 4.7.4
FT-497	Transmitter	Rosemount 1153HA5	Turbine Building	4.1.1-3, 4.7.4
FQ-476, 477, 486 FQ-487, 496, 497	Power Supply	Hagan Optimac Model 137-121 Or NUS SPS-801	Hagan Rack	4.1.1-3, 4.7.4
FM-476A/R, 476B/R FM-477A/R, 477B/R FM-486A/R, 486B/R FM-496A/R, 496B/R	I/V	Hagan Model 3110554-000	Hagan Rack	4.1.1-3, 4.7.4
FM-476, 477, 486 FM-487, 496, 497	Computer Module	Hagan Model 475000 Or NUS MBA 800	Hagan Rack	4.1.1-3, 4.7.4
FC-478A, 478B, 478C FC-478D, 488A, 488B FC-488C, 488D, 498A FC-498B, 498C, 498D	Comparator	Hagan Model 118 Or NUS SAM 800 Or NUS DAM 800	Hagan Rack	4.1.1-3, 4.7.4
FI-476, 477, 486 FI-487, 496, 497	Indicator	International Instruments 2520	RTGB	4.1.1-3, 4.7.4
F-476, 477, 486 F-487, 496, 497	I/V	Hagan Computer Signal Conditioner 3110552-000	Hagan Rack	4.1.1-3, 4.7.4
FR-478, 488, 498	Recorder	Yokogawa VR204	Control Room	4.7.4, 4.7.11
FM-476A, 476B, 477A FM-477B, 486A, 486B FM-487A, 487B, 496A FM-496B, 497A, 497B	V/I Isolator	Hagan Model 110 Or NUS OCA 800	Hagan Rack	4.1.1-3, 4.7.4

Instrument Identification

4.0 REFERENCES

4.1 DRAWINGS

4.1.1 5379-03494, Hagan Wiring Diagram, Revision 14
4.1.2 5379-03498, Hagan Wiring Diagram, Revision 16
4.1.3 5379-03499, Hagan Wiring Diagram, Revision 17
4.1.4 HBR2-11135, RTGB Panel C - Annunciator Section, Sheet 2, Revision 1
4.1.5 HBR2-11135, RTGB Panel C - Vertical Section, Sheet 3, Revision 0
4.1.6 5379-03440, Steam Generator Level Control and Protection System, Revision 10
4.1.7 5379-03485, Hagan Wiring Diagram, Revision 19
4.1.8 5379-03486, Hagan Wiring Diagram, Revision 19
4.1.9 5379-03487, Hagan Wiring Diagram, Revision 19

4.2 CALCULATIONS

4.2.1 RNP-E-1.005, 120 VAC Instrument Bus Voltage Evaluation, Revision 2
4.2.2 RNP-M/MECH-1651, Containment Analysis Inputs, Revision 10
4.2.3 RNP-I/INST-1040, Main Steam Flow Accuracy and Scaling Calculation, Revision 3
4.2.4 RNP-M/MECH-1616, Calculation for the Continuous Calorimetric, Revision 1
4.2.5 RNP-M/MECH-1741, 32-5015594-00 Appendix K Power Uprate Operating Conditions, Revision 0
4.2.6 RNP-I/INST-1125, ERFIS Feed Flow Automatic Calorimetric Uncertainty Calculation, Revision 3

4.3 REGULATORY DOCUMENTS

4.3.1 None

4.4 TECHNICAL MANUALS

4.4.1 728-589-13, Vendor Manual Hagan, Revision 22
4.4.2 728-399-88, Auxiliary Indicating Meters Bulletin Model 2500 2520, Revision 2
4.4.3 728-012-10, Vendor Manual Rosemount, Revision 25

4.5 CALIBRATION AND MAINTENANCE PROCEDURES

4.5.1 LP-351, Steam Generator #1 Level (F.W. Flow) Channel 476, Revision 10
4.5.2 LP-352, Steam Generator #2 Level (F.W. Flow) Channel 486, Revision 11
4.5.3 LP-353, Steam Generator #3 Level (F.W. Flow) Channel 496, Revision 8
4.5.4 LP-354, Steam Generator #1 Level (F.W. Flow) Channel 477, Revision 10
4.5.5 LP-355, Steam Generator #2 Level (F.W. Flow) Channel 487, Revision 12
4.5.6 LP-356, Steam Generator #3 Level (F.W. Flow) Channel 497, Revision 9
4.5.7 PIC-844, Yokogawa Recorders, Revision 0

4.6 PROCEDURES

4.6.1 EGR-NGGC-0153, Engineering Instrument Setpoints, Revision 9
4.6.2 TMM-026, List of Regulatory Guide 1.97 Components, Revision 18
4.6.3 MMM-006, Appendix B-4, Calibration Data Sheets, Revision 1
4.6.4 MMM-006, Calibration Program, Revision 22

4.7 OTHER REFERENCES

4.7.1 Updated Final Safety Analysis Report
4.7.2 Technical Specifications, Amendment 176
4.7.3 RNP-F/NFSA-0045, RNP Cycle 21 Reload Plant Parameters Documents, Revision 2
4.7.4 Equipment Data Base (EDB)
4.7.5 ASME Steam Tables 6th edition
4.7.6 R82-226/01, DBD for Control Room Habitability Modifications 993&994, Revision 6
4.7.7 727-702-25, Feedwater System Instrumentation Flow Westinghouse Manual Number W-1003, Revision 0.
4.7.8 ASME Fluid Meters Their Theory and Application, Sixth Edition, 1971
4.7.9 WNEP-8372, Model 44F Steam Generator Thermal and Hydraulic Design Data Report, Revision 3, April 1, 1985
4.7.10 CPL-89-660, Steam Flow Measurement at Low Power Levels
Memo NF-92A-0158, From: R. G. Matthews, To: Marvin Page,
Subject: Westinghouse Letter CPL-89-660
4.7.11 EC 47208, Replacement of RTGB Recorders

4.7.12 DBD/R87038/SD06, Design Basis Document, Reactor Safeguards and Protection System, Revision 5
4.7.13 EC 47152, Ultrasonic Feedwater Flow Measurement
4.7.14 EC 47162, Set-points, Uncertainty Calc. Changes For Appendix K Uprate
4.7.15 EC 47160, NSSS AND BOP ANALYSIS TO SUPPORT APPENDIX K UPRATE, Design Section, Para. F.5.7.p

5.0 INPUTS AND ASSUMPTIONS

5.1 The accuracy of a typical test resistor is on the order of ± 0.01%. Therefore, the test resistors used during calibration are assumed to have a negligible impact on the overall uncertainty calculation.

5.2 Per Reference 4.7.6, the ambient temperature in the Control Room varies from 70°F to 77°F during operation. The calibration temperature for the indicator and recorder is assumed to be 60°F. Therefore, a change in temperature of 17°F (9.4°C) is used to compute the indicator and recorder temperature effects.

5.3 Per Reference 4.7.4, the pressure transmitters are located in the Turbine Building. The Turbine Building is an open structure. The minimum temperature used to compute the transmitter temperature effect is assumed to be 33°F, because the transmitters are located in thermostatically controlled enclosures. Per Reference 4.7.1, the maximum temperature in the Turbine Building is 107°F.

5.4 Per Reference 4.6.1, reference accuracy typically includes the effects of linearity, hysteresis, and repeatability. The indicator reference accuracy given in Reference 4.4.2 is assumed to include the effects of linearity, hysteresis, and repeatability. The recorder reference accuracy is also assumed to include the effects of linearity, hysteresis, and repeatability.

5.5 Per References 4.5.1 through 4.5.6, the I/V module is calibrated as part of a string. Per Reference 4.4.1, the I/V module is a resistor. Resistors typically experience negligible drift. Therefore, any resistor drift throughout the fuel cycle is negligible and is accounted for during the string calibration.

5.6 Per Reference 4.7.6, the maximum temperature of the Hagan Rack Rooms is 82°F. Per Reference 4.6.1, the racks may experience an additional 10°F heat rise during operation. The ambient temperature at the time of calibration is assumed to be 50°F. Therefore, a change in temperature of 42°F is used to compute the temperature effect associated with rack components.

$$82°F + 10°F - 50°F = 42°F$$

5.7 Per Reference 4.4.1, the Westinghouse 3110552-000 Computer Signal Conditioner is a high precision resistor. Based on the high accuracy of the resistor, the resistor has a negligible impact on the overall loop uncertainty computation.

5.8 Per Reference 4.7.7, the thermal expansion factor for the flow element is 1.007 which corresponds to a feedwater temperature of approximately 442°F (100% load per Reference 4.2.2). Therefore, expansion of the flow element as the result of elevated temperatures during operation is accounted for during the calibration of the flow element. Per Reference 4.2.2, the feedwater temperature at 20% load is 305°F. Therefore, the change in temperature from 100% load to 20% load is less than 200°F and is negligible (Reference 4.6.1).

5.9 Per Reference 4.7.8, the following equation is used to compute the theoretical flow through a nozzle venturi:

$$m = 358.93\left(\frac{C\,Y\,d^2\,F_a}{\sqrt{1-\beta^4}}\right)\sqrt{\rho\,\Delta p}$$

where,

m = mass flow rate (lbm / hr)
C = discharge coefficient (unit less)
Y = expansion factor (1 for water)
d = bore diameter (in)
F_a = thermal expansion factor (unit less)
D = pipe diameter (in)
β = beta ratio (unit less ratio d / D)
ρ = fluid density (lbm / ft^3)
ΔP = differential pressure (inwc)

If all variables are treated as constants except density (ρ) and differential pressure (ΔP), the flow equation is simplified as follows:

$$m = K\sqrt{\rho\,\Delta p}$$

For calibration conditions, the flow equation is as follows:

$$m_C = K\sqrt{\rho_C\,\Delta p_C}$$

For operating conditions, the flow equation is as follows:

$$m_N = K\sqrt{\rho_N\,\Delta p_N}$$

Assuming a constant mass flow rate for calibration and operating conditions, the following equation is written:

$$m_N = m_C$$

Therefore,

$$K\sqrt{\rho_N \, \Delta p_N} = K\sqrt{\rho_C \, \Delta p_C}$$

Solving for ΔP_N yields the following equation:

$$\Delta p_N = \left(\frac{\rho_C}{\rho_N}\right)\Delta p_C$$

The process measurement effect, expressed in terms of % ΔP Span, due to changes in feedwater density from those assumed for calibration is obtained with the following equation:

$$PME_{DENSITY}\ (\%\ \Delta P\ Span) = \left(\frac{\Delta p_N - \Delta p_C}{\Delta P\ Span}\right)100\%\ \Delta P\ Span = \left(\frac{\frac{\rho_C}{\rho_N}\Delta p_C - \Delta p_C}{\Delta P\ Span}\right)100\%\ \Delta P\ Span$$

Therefore,

$$PME_{DENSITY}\ (\%\ \Delta P\ Span) = \left(\frac{\left(\frac{\rho_C}{\rho_N} - 1\right)\Delta p_C}{\Delta P\ Span}\right)100\%\ \Delta P\ Span$$

The uncertainty equation may be simplified by using the following relationship between differential pressure and flow:

$$100\%\left(\frac{\Delta P}{\Delta P\ Span}\right) = 100\%\left(\frac{Flow(\%\ Flow\ Span)}{100\%}\right)^2$$

Therefore,

$$PME_{DENSITY}\ (\%\ \Delta P\ Span) = 100\%\left(\frac{\rho_C}{\rho_N} - 1\right)\left(\frac{Flow(\%\ Flow\ Span)}{100\%}\right)^2$$

5.10 Per Reference 4.6.1, the normalized relationship between flow and differential pressure is given by the following equation:

$$F = \sqrt{\Delta P}$$

The equation used to convert bias uncertainties from % ΔP Span to % Flow Span is derived using perturbation methods. The flow equation with uncertainties in the differential pressure and flow terms is,

$$F + f = \sqrt{\Delta P + dp}$$

where,

F = actual flow (% Flow Span)
f = flow uncertainty (% Flow Span)
ΔP = differential pressure (% ΔP Span)
dp = differential pressure uncertainty (% ΔP Span)

Taking the difference between the two equations given above yields the following,

$$F + f - F = \sqrt{\Delta P + dp} - \sqrt{\Delta P} \Rightarrow f = \sqrt{\Delta P + dp} - \sqrt{\Delta P}$$

The equation given above is simplified by using the normalized relationship between flow and differential pressure as follows,

$$*f = \sqrt{F^2 + dp} - F$$

* - Multiply by a factor of 100 to obtain % Flow Span

To obtain the equation used to convert from % Flow Span to % ΔP Span, the equation given above is solved for "dp". Therefore, the equation used to convert from % Flow Span to % ΔP Span is as follows,

$$* dp = (F + f)^2 - F^2$$

* - Multiply by a factor of 100 to obtain % ΔP Span

5.11 Per Reference 4.6.1, the normalized relationship between flow and differential pressure is given by the following equation:

$$F = \sqrt{\Delta P}$$

The equation used to convert random uncertainties from % ΔP Span to % Flow Span is derived by taking the total derivative of the flow equation as follows:

$$dF = \frac{\partial}{\partial \Delta P}\sqrt{\Delta P} = \frac{dp}{2\sqrt{\Delta P}} \Rightarrow dF = \frac{dp}{2F}$$

where,

dF = flow uncertainty (% Flow Span)
dp = differential pressure uncertainty (% ΔP Span)
F = actual flow rate (% Flow Span)

To obtain the equation used to convert random uncertainties from % Flow Span to % ΔP Span, the equation given above is solved for "dp".

$$* dp = 2(F)(dF)$$

* - Multiply by a factor of 100 to obtain % ΔP Span

5.12 Per Reference 4.7.8, the following equation is used to compute the theoretical flow through a nozzle venturi:

$$m = 358.93\left(\frac{C\,Y\,d^2\,F_a}{\sqrt{1-\beta^4}}\right)\sqrt{\rho\,\Delta p}$$

where,

m = mass flow rate (lbm / hr)
C = discharge coefficient (unit less)
Y = expansion factor (1 for water)
d = bore diameter (in)
F_a = thermal expansion factor (unit less)
D = pipe diameter (in)
β = beta ratio (unit less ratio d / D)
ρ = fluid density (lbm / ft^3)
ΔP = differential pressure (inwc)

If all variables are treated as constants except differential pressure (ΔP) and the flow coefficient (K), the flow equation is simplified as follows:

$$m = K\sqrt{\Delta p}$$

For calibration conditions, the flow equation is as follows:

$$m_C = K_C\sqrt{\Delta p_C}$$

For operating conditions, the flow equation is as follows:

$$m_N = K_N\sqrt{\Delta p_N}$$

Assuming a constant mass flow rate for calibration and operating conditions, the following equation is written:

$$m_N = m_C$$

Therefore,

$$K_N\sqrt{\Delta p_N} = K_C\sqrt{\Delta p_C}$$

Solving for ΔP_N yields the following equation:

$$\Delta P_N = \left(\frac{K_C}{K_N}\right)^2 \Delta P_C$$

The process measurement effect, expressed in terms of inwc, associated with variations in the Flow Coefficient (FC) is obtained with the following equation:

$$FC = \Delta P_N - \Delta P_C = \left(\left(\frac{K_C}{K_N}\right)^2 - 1\right)\Delta P_C$$

The process measurement effect, expressed in terms of % ΔP Span, associated with variations in the flow coefficient is obtained with the following equation:

$$FC = 100\%\left(\frac{\left(\left(\frac{K_C}{K_N}\right)^2 - 1\right)\Delta P_C}{\Delta P\,\text{Span}}\right)$$

The uncertainty equation may be simplified by using the following relationship between differential pressure and flow:

$$100\%\left(\frac{\Delta P}{\Delta P\,\text{Span}}\right) = 100\%\left(\frac{\text{Flow}(\%\,\text{Flow Span})}{100\%}\right)^2$$

Therefore,

$$FC(\%\,\Delta P\,Span) = 100\%\left(\left(\frac{K_C}{K_N}\right)^2 - 1\right)\left(\frac{Flow(\%\,Flow\,Span)}{100\%}\right)^2$$

5.13 Per Section 9.1, each transmitter is calibrated from 0 to 300 inwc. The actual differential pressure developed across each flow element / tap set is less than 300 inwc. Therefore, a bias is introduced into the flow reading as a result of the choice of the calibrated range. For conservatism, the minimum differential pressure of 296.13 inwc is used to calculate the flow coefficient bias.

The flow coefficient for calibration conditions is computed with the following equation:

$$F = K_C\sqrt{\Delta P} \Rightarrow K_C = \frac{F}{\sqrt{\Delta P}} \Rightarrow K_C = \frac{4{,}000{,}000\ lbm/hr}{\sqrt{300\ inwc}} = 230{,}940$$

The flow coefficient for normal conditions is computed with the following equation:

$$F = K_N\sqrt{\Delta P} \Rightarrow K_N = \frac{F}{\sqrt{\Delta P}} \Rightarrow K_N = \frac{4{,}000{,}000\ lbm/hr}{\sqrt{296.13\ inwc}} = 232{,}444$$

5.14 Estimates of feedwater density at selected Reactor Power levels are necessary to support the Process Measurement Effect calculation presented in Section 6.4. For density determinations, temperature is the dominant process parameter. Reference 4.7.9 provides feedwater temperatures at various pre-power uprate power levels from 50% through 100% (1165 MWt through 2330 MWt). In the table below, those values have been interpolated and extrapolated to approximate temperatures at the specified post-power uprate Reactor Power conditions.

The impact of pressure on feedwater density is less significant. The predicted post-power uprate process conditions vary based on Steam Generator tube plugging status and clean/fouled system conditions. Per Reference 4.2.5, steam generator dome pressure at the post-power uprate 100% power (2339 MWT) is 800.5 psia with 6% SG tube plugging and 820.9 psia at 0% tube plugging. Per Reference 4.7.9, steam pressures at the pre-power uprate 50% power level range from 898 to 924 psia depending upon the degree of system fouling. A reasonable range of steam pressures is selected as 800.5 through 898 psia corresponding to 100% through 50% post-uprate power levels. Per Reference 4.2.4 (Table 24), the mean feedwater pressure has been observed to be approximately 74 psi greater than the Steam Generator dome pressure. It is assumed that feedwater flow has a linear relationship with reactor power. Consequently, for use in this calculation, the corresponding feedwater pressures range will be designated as 874.5 through 972 psia corresponding to 100 through 50% post-uprate power levels. These values will be utilized in the following table to estimate feedwater density at selected thermal power levels.

Reactor Power	Feedwater Temperature	Feedwater Pressure	Feedwater Density
100% (2339 MWt)	441.8°F	874.5 psia	52.040 lbm / ft^3
90% (2105 MWt)	430.3°F	894.0 psia	52.573 lbm / ft^3
80% (1871 MWt)	418.3°F	913.5 psia	53.109 lbm / ft^3
70% (1637 MWt)	406.2°F	933.0 psia	53.631 lbm / ft^3
50% (1170 MWt)	375.2°F	972.0 psia	54.887 lbm / ft^3

5.15 Per Reference 4.7.9, the maximum steam pressure over the operating range of interest (≥50%)occurs at 50% power (924 psia). Adjusting this by the 74 psi steam/feedwater pressure difference discussed in Design Input 5.14 yields a maximum feedwater pressure of 998 psia (983.3 psig). For conservatism, a maximum static pressure of 1010 psig will be used to compute the transmitter static pressure effect.

5.16 Per Reference 4.7.10, the current Technical Specification setpoint analytical limit is assumed to be 40% of full steam flow (mismatch). Per Reference 4.2.3, nominal steam flow at 100% power is 3.43×10^6 lbm / hr. Therefore, the Technical Specification setpoint analytical limit is 1.372×10^6 lbm / hr (40% of 3.43×10^6 lbm / hr). Per Section 9.1, the calibrated flow span is 4×10^6 lbm / hr. Therefore, the Technical Specification setpoint analytical limit for the steam flow / feedwater flow mismatch reactor trip setpoint is 34.3% Flow Span (also see Reference 4.7.15).

The steam flow greater than feedwater flow alarm associated with these instrument loops serves to alert the operator that a steam flow / feedwater flow mismatch is approaching the steam flow / feedwater flow mismatch reactor trip setpoint. Therefore, the limit for the alarm is the calibrated feedwater flow / steam flow trip setpoint of 16% Flow Span (0.64 Vdc / 4Vdc * 100) (References 4.5.1 through 4.5.6).

The feedwater flow greater than steam flow alarm associated with these instrument loops serves to alert the operator that feedwater flow has exceeded steam flow. There is no specific requirement for this setpoint. Therefore, the limit for this alarm setpoint is assumed to be equal to the analytical limit for the steam flow / feedwater flow mismatch reactor trip setpoint of 34.3% Flow Span.

5.17 The digital recorder scale is programmable and variable. It is assumed that the resolution is no less than 0.01×10^6 lbm/hr.

5.18 Per Reference 4.2.5, the nominal steam flow / feedwater flow at 100% power is 3.43×10^6 lbm / hr. Per Section 9.1, the calibrated flow span is 4×10^6 lbm / hr. Therefore, the following relationship between % Flow and % Flow Span exists:

$$100\% \text{ Flow} = \left(\frac{3.43 \times 10^6 \text{ lbm / hr}}{4.00 \times 10^6 \text{ lbm / hr}} \right) 100\% \text{ Flow Span} = 85.75\% \text{ Flow Span}$$

The flow rates analyzed in this calculation are from 50% Flow to 100% Flow. Therefore, uncertainties are computed for the following flow rates:

Flow Rate (% Flow)	Flow Rate (% Flow Span)
100%	85.75%
90%	77.18%
80%	68.60%
70%	60.03%
50%	42.88%

5.19 Technical information included in Reference 4.7.11 shows that the recorder manufacturer does not specify a time dependent drift uncertainty for these digital devices. It is therefore assumed that any such drift is negligible and is included within the Reference Accuracy and Temperature Effect specifications.

6.0 CALCULATION OF UNCERTAINTY CONTRIBUTORS

6.1 ACCIDENT EFFECTS (AE)

Per Reference 4.6.2, the indication / recording functions provided by each loop are not required post accident. Therefore, accident effects are not computed for the indication / recording functions.

The transmitters in each loop are located in the Turbine Building and are not exposed to adverse environmental conditions during an accident. Therefore, loop uncertainties are computed for normal environmental conditions only.

6.2 SEISMIC EFFECT (SE)

The steam flow / feedwater flow mismatch function is required to operate following a seismic event. Therefore, seismic uncertainties are computed for this function.

The ERFIS, indication, and recorder uncertainties do not include seismic effects.

Per References 4.7.4, FT-476, FT-486, and 496 are Rosemount Model 1151DP5 transmitters. Per Reference 4.4.3, the transmitter seismic effect (SE_{xmtr}) is ± 0.25% URL.

Per References 4.7.4, FT-477, and 487 are Rosemount Model 1153DA5 transmitters. Per Reference 4.4.3, the transmitter seismic effect (SE_{xmtr}) is ± 0.50% URL.

Per References 4.7.4, FT-497 is a Rosemount Model 1153HA5 transmitter. Per Reference 4.4.3, the transmitter seismic effect (SE_{xmtr}) is ± 0.50% URL.

For conservatism, a seismic effect of ± 0.50% URL is used for all transmitters. Per Section 9.1, the calibrated span of each loop is 300 inwc. Therefore,

$$SE_{xmtr} = \pm\ 0.50\%\ \text{URL} \left(\frac{750\,\text{inwc}}{100\%\ \text{URL}}\right)\left(\frac{100\%\ \text{Span}}{300\,\text{inwc}}\right)$$

$$SE_{xmtr} = \pm\ 1.25\%\ \Delta P\ \text{Span}$$

6.3 INSULATION RESISTANCE ERROR (IR)

These loops are not required to mitigate any event which results in degraded signal cabling. Therefore, Insulation Resistance (IR) effects are not applicable.

6.4 PROCESS MEASUREMENT ERROR (PME)

6.4.1 Process Measurement Error - Normal Environment

Density Effects

Per Design Input 5.9, the following equation is used to compute process measurement effects associated with changes in feedwater density:

$$PME_{DENSITY}\ (\%\ \Delta P\ Span) = 100\%\left(\frac{\rho_C}{\rho_N} - 1\right)\left(\frac{Flow(\%\ Flow\ Span)}{100\%}\right)^2$$

Per Design Input 5.10, the following equation is used to convert the process measurement effect from % ΔP Span to % Flow Span:

$$PME_{DENSITY}\ (\%\ Flow\ Span) = 100\left(\sqrt{F^2 + PME_{DENSITY}\ (\%\ \Delta P\ Span)} - F\right)$$

Note: The decimal fraction for the flow rate and uncertainty is used in the equation.

Per Reference 4.7.7, the following fluid density is assumed for calibration:

ρc = 52.0502 lbm / ft^3 (855 psia, 442°F)

Per Design Input 5.14 and 5.18, the following fluid densities and flow rates are used to compute process measurement effects:

$\rho_{100\%} = 52.040 \text{ lbm / ft}^3$
$\rho_{90\%} = 52.573 \text{ lbm / ft}^3$
$\rho_{80\%} = 53.109 \text{ lbm / ft}^3$
$\rho_{70\%} = 53.631 \text{ lbm / ft}^3$
$\rho_{50\%} = 54.887 \text{ lbm / ft}^3$

Flow Rate (% Flow Span)	$PME_{DENSITY}$ (% Δ P Span)	$PME_{DENSITY}$ (% Flow Span)
85.75%	0.01%	0.01%
77.18%	-0.59%	-0.38%
68.60%	-0.94%	-0.69%
60.03%	-1.06%	-0.89%
42.88%	-0.95%	-1.12%

Piping Effects

If the minimum upstream and downstream piping requirements are met, an installation effect bias of ± 0.50% Flow Reading should be included in the loop uncertainty calculation (Reference 4.6.1). If the minimum upstream and downstream piping requirements are not met, an additional bias ± 0.50% Flow Reading should be applied. For conservatism, it is assumed that the minimum upstream and downstream piping requirements are not met. Therefore,

PME_{PIPING} (% Flow Span) = +1.00% Flow Reading -1.00% Flow Reading

Per Design Input 5.10, the following equation is used to convert bias uncertainties from % Flow Span to % ΔP Span:

$$PME_{PIPING} (\% \Delta P \text{ Span}) = 100\left((F + PME_{PIPING} (\% \text{ Flow Span}))^2 - F^2\right)$$

Note: The decimal fraction for the flow rate and uncertainty is used in the equation.

Therefore, the process measurement effect due to the piping configuration is as follows:

Flow Rate (% Flow Span)	PM E_{PIPING} (% Flow Span)	PM E_{PIPING} (% Flow Span)	PM E_{PIPING} (% Δ P Span)	PM E_{PIPING} (% Δ P Span)
85.75%	0.86%	-0.86%	1.48%	-1.46%
77.18%	0.77%	-0.77%	1.20%	-1.19%
68.60%	0.69%	-0.69%	0.95%	-0.94%
60.03%	0.60%	-0.60%	0.72%	-0.72%
42.88%	0.43%	-0.43%	0.37%	-0.37%

Thermal Expansion Effects

Per Design Input 5.8, thermal expansion effects are negligible.

6.4.2 Process Measurement Error - Accident Environment

Per Section 6.1, accident effects are not considered for these loops.

6.5 PRIMARY ELEMENT ERROR (PE)

Primary Element Accuracy

Per Reference 4.7.7, rigorous testing was performed on the flow elements, and special design criteria were used to minimize measurement errors. Calibration parameters and flow element uncertainties were determined through detailed testing and analysis. Per Reference 4.7.7, the flow element has an accuracy of ± 0.25% Flow Reading. Therefore,

PE (% Flow Span) = ± 0.25% Flow Reading

Per Design Input 5.11, the following equation is used to convert random primary element uncertainties from % Flow Span to % ΔP Span:

$$PE\ (\%\ \Delta P\ Span) = 100(2\,(Flow\ Rate)(PE\ (\%\ Flow\ Span)))$$

Note: The decimal fraction for the flow rate and uncertainty is used in the equation.

Flow Rate (% Flow Span)	PE (% Flow Span)	PE (% Δ P Span)
85.75%	0.21%	0.37%
77.18%	0.19%	0.30%
68.60%	0.17%	0.24%
60.03%	0.15%	0.18%
42.88%	0.11%	0.09%

Flow Coefficient Uncertainty

Per Design Input 5.12, the bias uncertainty associated with the flow coefficient is computed with the following equation:

$$FC(\%\ \Delta P\ Span) = 100\%\left(\left(\frac{K_C}{K_N}\right)^2 - 1\right)\left(\frac{Flow(\%\ Flow\ Span)}{100\%}\right)^2$$

Per Design Input 5.10, the following equation is used to convert bias uncertainties from % ΔP Span to % Flow Span:

$$*f = \sqrt{F^2 + dp} - F$$

* - Multiply by a factor of 100 to obtain % Flow Span

Per Design Input 5.13, the flow coefficient for calibration (K_C) is 230,940, and the flow coefficient for normal operation (K_N) is 232,444. Therefore,

Flow Rate (% Flow Span)	FC (% Δ P Span)	FC (% Flow Span)
85.75%	-0.95%	-0.55%
77.18%	-0.77%	-0.50%
68.60%	-0.61%	-0.44%
60.03%	-0.46%	-0.39%
42.88%	-0.24%	-0.28%

6.6 TRANSMITTER (FT-497, ROSEMOUNT 1153HA5)

6.6.1 Transmitter's Unverified Attributes of Reference Accuracy (RA_{xmtr})

Per Reference 4.4.3, the reference accuracy of the transmitter is ± 0.25% Span and includes the effects of linearity, hysteresis, and repeatability. Per References 4.6.3 and 4.6.4, the transmitter is calibrated to ± 0.50% Span at nine points (5 up and 4 down). Therefore, the calibration procedure verifies the attributes of linearity and hysteresis but not repeatability. Per Reference 4.6.1, the following equation is utilized to compute the repeatability portion of the transmitter reference accuracy:

$$\text{Repeatability} = \pm\frac{RA_{xmtr}}{\sqrt{3}} = \pm\frac{0.25\%\,\text{Span}}{\sqrt{3}} = \pm 0.14\%\ \text{Span}$$

Therefore,

$$RA_{xmtr} = \pm 0.14\%\ \Delta P\ \text{Span}$$

6.6.2 Transmitter Calibration Tolerance (CAL_{xmtr})

Per Reference 4.6.4, the transmitter is calibrated to ± 0.50% Span. Therefore,

$$CAL_{xmtr} = \pm 0.50\% \ \Delta P \text{ Span}$$

6.6.3 Transmitter Drift (DR_{xmtr})

Per Attachment D, transmitter drift is given as ± 0.20% Upper Range Limit over 30 months. Per Reference 4.4.3, the Upper Range Limit (URL) for a range code 5 transmitter is 750 inwc. Per Reference 4.6.1, the time interval between calibrations is 22.5 month (18 months + 25%). Per Section 9.1, the calibrated span of the transmitter is 300 inwc. Therefore,

$$DR_{xmtr} = \pm\ 0.20\% \left(\frac{750 \text{ inwc}}{300 \text{ inwc}} \right)$$

$$DR_{xmtr} = \pm 0.50\% \ \Delta P \text{ Span}$$

6.6.4 Transmitter M&TE Effect (MTE_{xmtr})

A DMM, pressure gauge, and the instrument loop test point resistor are used to calibrate the transmitter. Per Reference 4.6.1, the combined (SRSS) accuracy of all the M&TE used to calibrate the transmitter is better than or equal to the calibration accuracy of the transmitter. For conservatism and flexibility in the choice of test equipment, the MTE term for the transmitter is set equal to the calibration tolerance of the transmitter.

$$MTE_{xmtr} = \pm 0.50\% \ \Delta P \text{ Span}$$

6.6.5 Transmitter Temperature Effect (TE_{xmtr})

Per Reference 4.4.3, the transmitter temperature effect is given as ± 0.75% Upper Range Limit + 0.50% Span for a change in temperature of 100°F from the temperature at which the transmitter was calibrated. Per Reference 4.4.3, the Upper Range Limit (URL) for a range code 5 transmitter is 750 inwc. Per Section 9.1, the span of the transmitter is 300 inwc. Per Reference 4.6.3, the transmitters are located in the Turbine Building, and the minimum and maximum Turbine Building temperatures are 33°F and 107°F respectively (Design Input 5.3). Therefore, a maximum change in temperature of 74°F (107°F - 33°F) is used to calculate the transmitter temperature effect. Therefore,

$$TE_{xmtr} = \pm\left(0.75\%\left(\frac{750\,\text{inwc}}{300\,\text{inwc}}\right) + 0.50\%\ \text{Span}\right)\left(\frac{74°F}{100°F}\right)$$

$$TE_{xmtr} = \pm\ 1.76\%\ \Delta P\ \text{Span}$$

6.6.6 Transmitter Static Pressure Effect (SPE_{xmtr})

Per Reference 4.4.3, a static pressure span effect of -1.0% Upper Range Limit per 1000 psi is specified for the transmitter. Per Section 9.1, the static pressure span effect is systematic and can be calibrated out. Therefore, the static pressure span effect is equal to the span shift uncertainty of ± 0.25% Upper Range Limit per 1000 psi.

Per Reference 4.4.3, the static pressure zero effect is specified as ± 2.0% Upper Range Limit per 4500 psi. Per Design Input 5.15, the maximum static pressure across the transmitter is 1010 psi. Per Reference 4.4.3, the Upper Range Limit (URL) of a range code 5 transmitter is 750 inwc. The span of the transmitter is 300 inwc (Section 9.1). Therefore, the total Static Pressure Effect (SPE) is computed as follows:

$$SPE_{xmtr} = \pm\sqrt{\left[0.25\%\left(\frac{750\,\text{inwc}}{300\,\text{inwc}}\right)\left(\frac{1010\,\text{psi}}{1000\,\text{psi}}\right)\right]^2 + \left[2.00\%\left(\frac{750\,\text{inwc}}{300\,\text{inwc}}\right)\left(\frac{1010\,\text{psi}}{4500\,\text{psi}}\right)\right]^2}$$

$$SPE_{xmtr} = \pm\ 1.29\%\ \Delta P\ \text{Span}$$

6.6.7 Transmitter Power Supply Effect (PSE_{xmtr})

Per Reference 4.4.3, the power supply effect associated with the transmitters is given as ± 0.005% Span per volt variation in power supplied to the transmitter from the power supplied at the time of calibration. Per Reference 4.4.1, each instrument loop is powered by a Model 137-121 45 Vdc supply or an NUS SPS-801 power supply. The power supply is powered by regulated instrument buses per Reference 4.2.1. Therefore, the power supply effect is negligible.

$PSE_{xmtr} =$ N/A

6.6.8 Transmitter Total Device Uncertainty (TDU_{xmtr})

Total Device Uncertainty for normal environmental conditions is computed using the following equation:

$$TDU_{xmtr} = \pm\sqrt{(CAL_{xmtr} + MTE_{xmtr})^2 + RA_{xmtr}^{\ 2} + DR_{xmtr}^{\ 2} + TE_{xmtr}^{\ 2} + SPE_{xmtr}^{\ 2}}$$

$$TDU_{xmtr} = \pm 2.46\%\ \Delta P \text{ Span}$$

6.6.9 Transmitter As Found Tolerance (AFT_{xmtr})

Per Reference 4.6.1, the As Found Tolerance (AFT) is computed using the following equation:

$$AFT_{xmtr} = \pm\sqrt{CAL_{xmtr}^{\ 2} + DR_{xmtr}^{\ 2} + MTE_{xmtr}^{\ 2}}$$

$$AFT_{xmtr} = \pm 0.87\%\ \Delta P \text{ Span}$$

6.6.10 Transmitter As Left Tolerance (ALT_{xmtr})

Per Reference 4.6.1, the As Left Tolerance (ALT) is computed using the following equation:

$ALT_{xmtr} = CAL_{xmtr}$
$ALT_{xmtr} = \pm 0.50\%\ \Delta P$ Span

Error Contributor	Value	Type	Section
RA	± 0.14% ΔP Span	Random	6.6.1
CAL	± 0.50% ΔP Span	Random	6.6.2
DR	± 0.50% ΔP Span	Random	6.6.3
SPE	±1.29% ΔP Span	Random	6.6.6
MTE	± 0.50% ΔP Span	Random	6.6.4
TE	± 1.76% ΔP Span	Random	6.6.5
As Left Tolerance (ALT)	± 0.50% ΔP Span	Random	6.6.10
As Found Tolerance (AFT)	± 0.87% ΔP Span	Random	6.6.9
Total Device Uncertainty (non-accident)	± 2.46% ΔP Span	Random	6.6.8

Transmitter Uncertainty Summary

6.7 TRANSMITTER (FT-477 AND FT-487, ROSEMOUNT 1153DA5)

6.7.1 Transmitter's Unverified Attributes of Reference Accuracy (RA_{xmtr})

Per Reference 4.4.3, the reference accuracy of the transmitter is ± 0.25% Span and includes the effects of linearity, hysteresis, and repeatability. Per References 4.6.3 and 4.6.4, the transmitter is calibrated to ± 0.50% Span at nine points (5 up and 4 down). Therefore, the calibration procedure verifies the attributes of linearity and hysteresis but not repeatability. Per Reference 4.6.1, the following equation is utilized to compute the repeatability portion of the transmitter reference accuracy:

$$\text{Repeatability} = \pm\frac{RA_{xmtr}}{\sqrt{3}} = \pm\frac{0.25\%\,\text{Span}}{\sqrt{3}} = \pm 0.14\%\ \text{Span}$$

Therefore,

$$RA_{xmtr} = \pm 0.14\%\ \Delta P\ \text{Span}$$

6.7.2 Transmitter Calibration Tolerance (CAL_{xmtr})

Per Reference 4.6.4, the transmitter is calibrated to ± 0.50% Span. Therefore,

$$CAL_{xmtr} = \pm 0.50\%\ \Delta P\ \text{Span}$$

6.7.3 Transmitter Drift (DR_{xmtr})

Per Attachment D, transmitter drift is given as ± 0.20% Upper Range Limit over 30 months. Per Reference 4.4.3, the Upper Range Limit (URL) for a range code 5 transmitter is 750 inwc. Per Reference 4.6.1, the time interval between calibrations is 22.5 month (18 months + 25%). Per Section 9.1, the calibrated span of the transmitter is 300 inwc. Therefore,

$$DR_{xmtr} = \pm 0.20\%\left(\frac{750\,\text{inwc}}{300\,\text{inwc}}\right)$$

$$DR_{xmtr} = \pm 0.50\%\ \Delta P\ \text{Span}$$

6.7.4 Transmitter M&TE Effect (MTE_{xmtr})

A DMM, pressure gauge, and the instrument loop test point resistor are used to calibrate the transmitter. Per Reference 4.6.1, the combined (SRSS) accuracy of all the M&TE used to calibrate the transmitter is better than or equal to the calibration accuracy of the transmitter. For conservatism and flexibility in the choice of test equipment, the MTE term for the transmitter is set equal to the calibration tolerance of the transmitter.

$$MTE_{xmtr} = \pm 0.50\% \ \Delta P \text{ Span}$$

6.7.5 Transmitter Temperature Effect (TE_{xmtr})

Per Reference 4.4.3, the transmitter temperature effect is given as ± 0.75% Upper Range Limit + 0.50% Span for a change in temperature of 100°F from the temperature at which the transmitter was calibrated. Per Reference 4.4.3, the Upper Range Limit (URL) for a range code 5 transmitter is 750 inwc. Per Section 9.1, the span of the transmitter is 300 inwc. Per Reference 4.6.3, the transmitters are located in the Turbine Building, and the minimum and maximum Turbine Building temperatures are 33°F and 107°F respectively (Design Input 5.3). Therefore, a maximum change in temperature of 74°F (107°F - 33°F) is used to calculate the transmitter temperature effect. Therefore,

$$TE_{xmtr} = \pm\left(0.75\%\left(\frac{750\text{ inwc}}{300\text{ inwc}}\right) + 0.50\%\text{ Span}\right)\left(\frac{74°F}{100°F}\right)$$

$$TE_{xmtr} = \pm\ 1.76\% \ \Delta P \text{ Span}$$

6.7.6 Transmitter Static Pressure Effect (SPE_{xmtr})

Per Reference 4.4.3, a static pressure span effect of -1.0% Upper Range Limit per 1000 psi is specified for the transmitter. Per Section 9.1, the static pressure span effect is systematic and can be calibrated out. Therefore, the static pressure span effect is equal to the span shift uncertainty of ± 0.25% Upper Range Limit per 1000 psi.

Per Reference 4.4.3, the static pressure zero effect is specified as ± 0.25% Upper Range Limit per 2000 psi. Per Design Input 5.15, the maximum static pressure across the transmitter is 1010 psi. Per Reference 4.4.3, the Upper Range Limit (URL) of a range code 5 transmitter is 750 inwc. The span of each transmitter is 300 inwc (Section 9.1). Therefore, the total Static Pressure Effect (SPE) is computed as follows:

$$SPE_{xmtr} = \pm\sqrt{\left[0.25\%\left(\frac{750\,\text{inwc}}{300\,\text{inwc}}\right)\left(\frac{1010\,\text{psi}}{1000\,\text{psi}}\right)\right]^2 + \left[0.25\%\left(\frac{750\,\text{inwc}}{300\,\text{inwc}}\right)\left(\frac{1010\,\text{psi}}{2000\,\text{psi}}\right)\right]^2}$$

$$SPE_{xmtr} = \pm\,0.71\%\ \Delta P\ \text{Span}$$

6.7.7 Transmitter Power Supply Effect (PSE_{xmtr})

Per Reference 4.4.3, the power supply effect associated with the transmitters is given as ± 0.005% Span per volt variation in power supplied to the transmitter from the power supplied at the time of calibration. Per Reference 4.4.1, each instrument loop is powered by a Model 137-121 45 Vdc supply or an NUS SPS-801 power supply. The power supply is powered by regulated instrument buses per Reference 4.2.1. Therefore, the power supply effect is negligible.

$PSE_{xmtr} =$ N/A

6.7.8 Transmitter Total Device Uncertainty (TDU_{xmtr})

Total Device Uncertainty for normal environmental conditions is computed using the following equation:

$$TDU_{xmtr} = \pm\sqrt{(CAL_{xmtr} + MTE_{xmtr})^2 + RA_{xmtr}^{\ 2} + DR_{xmtr}^{\ 2} + TE_{xmtr}^{\ 2} + SPE_{xmtr}^{\ 2}}$$

$$TDU_{xmtr} = \pm\,2.21\%\ \Delta P\ \text{Span}$$

6.7.9 Transmitter As Found Tolerance (AFT_{xmtr})

Per Reference 4.6.1, the As Found Tolerance (AFT) is computed using the following equation:

$$AFT_{xmtr} = \pm\sqrt{CAL_{xmtr}^{2} + DR_{xmtr}^{2} + MTE_{xmtr}^{2}}$$

$$AFT_{xmtr} = \pm 0.87\%\ \Delta P\ \text{Span}$$

6.7.10 Transmitter As Left Tolerance (ALT_{xmtr})

Per Reference 4.6.1, the As Left Tolerance (ALT) is computed using the following equation:

$$ALT_{xmtr} = CAL_{xmtr}$$

$$ALT_{xmtr} = \pm 0.50\%\ \Delta P\ \text{Span}$$

Error Contributor	Value	Type	Section
RA	± 0.14% ΔP Span	Random	6.7.1
CAL	± 0.50% ΔP Span	Random	6.7.2
DR	± 0.50% ΔP Span	Random	6.7.3
SPE	± 0.71% ΔP Span	Random	6.7.6
MTE	± 0.50% ΔP Span	Random	6.7.4
TE	± 1.76% ΔP Span	Random	6.7.5
As Left Tolerance (ALT)	± 0.50% ΔP Span	Random	6.7.10
As Found Tolerance (AFT)	± 0.87% ΔP Span	Random	6.7.9
Total Device Uncertainty (non-accident)	± 2.21% ΔP Span	Random	6.7.8

Transmitter Uncertainty Summary

6.8 TRANSMITTER (FT-476, FT-486 AND FT-496, ROSEMOUNT 1151DP5)

6.8.1 Transmitter's Unverified Attributes of Reference Accuracy (RA_{xmtr})

Per Reference 4.4.3, the reference accuracy of the transmitter is ± 0.20% Span and includes the effects of linearity, hysteresis, and repeatability. Per References 4.6.3 and 4.6.4, the transmitter is calibrated to ± 0.50% Span at nine points (5 up and 4 down). Therefore, the calibration procedure verifies the attributes of linearity and hysteresis but not repeatability. Per Reference 4.6.1, the following equation is utilized to compute the repeatability portion of the transmitter reference accuracy:

$$\text{Repeatability} = \pm\frac{RA_{xmtr}}{\sqrt{3}} = \pm\frac{0.20\%\,\text{Span}}{\sqrt{3}} = \pm\,0.12\%\ \Delta P\ \text{Span}$$

Therefore,

$$RA_{xmtr} = \pm\,0.12\%\ \Delta P\ \text{Span}$$

6.8.2 Transmitter Calibration Tolerance (CAL_{xmtr})

Per Reference 4.6.4, the transmitter is calibrated to ± 0.50% Span. Therefore,

$$CAL_{xmtr} = \pm\,0.50\%\ \Delta P\ \text{Span}$$

6.8.3 Transmitter Drift (DR_{xmtr})

Per Reference 4.4.3, transmitter drift is given as ± 0.20% Upper Range Limit for a time period of 6 months. Per Reference 4.6.1, the time interval between calibrations is 22.5 month (18 months + 25%). Per Reference 4.4.3, the Upper range Limit (URL) for a range code 5 transmitter is 750 inwc. Per Section 9.1, the span of the transmitter is 300 inwc. Therefore,

$$DR_{xmtr} = \pm\sqrt{\left(\frac{22.5\,\text{months}}{6\,\text{months}}\right)\left(0.20\%\left(\frac{750\,\text{inwc}}{300\,\text{inwc}}\right)\right)^2}$$

$$DR_{xmtr} = \pm\,0.97\%\ \Delta P\ \text{Span}$$

6.8.4 Transmitter M&TE Effect (MTE_{xmtr})

A DMM, pressure gauge, and the instrument loop test point resistor are used to calibrate the transmitter. Per Reference 4.6.1, the combined (SRSS) accuracy of all the M&TE used to calibrate the transmitter is better than or equal to the calibration accuracy of the transmitter. For conservatism and flexibility in the choice of test equipment, the MTE term for the transmitter is set equal to the calibration tolerance of the transmitter.

$$MTE_{xmtr} = \pm\, 0.50\%\ \Delta P\ \text{Span}$$

6.8.5 Transmitter Temperature Effect (TE_{xmtr})

Per Reference 4.4.3, the transmitter temperature effect is given as ± 1.00% Span at maximum span (750 inwc) and ±3.50% Span (150 inwc) at minimum span for a change in temperature of 100°F from the temperature at which the transmitter was calibrated. The temperature effect for the span of 300 inwc is obtained through linear interpolation to be ± 2.88% Span per 100°F. Per Reference 4.6.3, the transmitters are located in the Turbine Building, and the minimum and maximum Turbine building temperatures are 33°F and 107°F respectively (Design Input 5.3). Therefore, a maximum change in temperature of 74°F (107°F - 33°F) is used to calculate the transmitter temperature effect. Therefore,

$$TE_{xmtr} = \pm\ 2.88\%\ \text{Span}\left(\frac{\Delta T}{100°F}\right)$$

$$TE_{xmtr} = \pm\ 2.88\%\ \text{Span}\left(\frac{74°F}{100°F}\right) = \pm\, 2.13\%\ \Delta P\ \text{Span}$$

6.8.6 Transmitter Static Pressure Effect (SPE_{xmtr})

Per Reference 4.4.3, a static pressure span effect of -0.81% Reading per 1000 psi is specified for the transmitter. Per Section 9.1, the static pressure span effect is systematic and can be calibrated out. Therefore, the static pressure span effect is equal to the span shift uncertainty of ± 0.25% Reading per 1000 psi. For conservatism, the static pressure span effect is computed using the maximum reading of 300 inwc (Section 9.1). Therefore, the static pressure span effect is ± 0.25% Span per 1000 psi.

Per Reference 4.4.3, the static pressure zero effect is specified as ± 0.25% Upper Range Limit per 2000 psi. Per Design Input 5.15, the maximum static pressure across the transmitter is 1010 psi. Per Reference 4.4.3, the Upper Range Limit (URL) of a range code 5 transmitter is 750 inwc. The span of each transmitter is 300 inwc (Section 9.1). Therefore, the total Static Pressure Effect (SPE) is computed as follows:

$$SPE_{xmtr} = \pm\sqrt{\left[0.25\%\left(\frac{1010\text{ psi}}{1000\text{ psi}}\right)\right]^2 + \left[0.25\%\left(\frac{750\text{ inwc}}{300\text{ inwc}}\right)\left(\frac{1010\text{ psi}}{2000\text{ psi}}\right)\right]^2}$$

$$SPE_{xmtr} = \pm\ 0.40\%\ \Delta P\ \text{Span}$$

6.8.7 Transmitter Power Supply Effect (PSE_{xmtr})

Per Reference 4.4.3, the power supply effect associated with the transmitters is given as ± 0.005% Span per volt variation in power supplied to the transmitter from the power supplied at the time of calibration. Per Reference 4.4.1, each instrument loop is powered by a Model 137-121 40 Vdc supply or an NUS SPS-801 power supply. The power supply is powered by regulated instrument buses per Reference 4.2.1. Therefore, the power supply effect is negligible.

$PSE_{xmtr} =$ N/A

6.8.8 Transmitter Total Device Uncertainty (TDU_{xmtr})

Total Device Uncertainty for normal environmental conditions is computed using the following equation:

$$TDU_{xmtr} = \pm\sqrt{(CAL_{xmtr} + MTE_{xmtr})^2 + RA_{xmtr}^{\ 2} + DR_{xmtr}^{\ 2} + TE_{xmtr}^{\ 2} + SPE_{xmtr}^{\ 2}}$$

$$TDU_{xmtr} = \pm\ 2.58\%\ \Delta P\ \text{Span}$$

6.8.9 Transmitter As Found Tolerance (AFT_{xmtr})

Per Reference 4.6.1, the As Found Tolerance (AFT) is computed using the following equation:

$$AFT_{xmtr} = \pm\sqrt{CAL_{xmtr}^{\ 2} + DR_{xmtr}^{\ 2} + MTE_{xmtr}^{\ 2}}$$

$$AFT_{xmtr} = \pm\ 1.20\%\ \Delta P\ \text{Span}$$

6.8.10 Transmitter As Left Tolerance (ALT_{xmtr})

Per Reference 4.6.1, the As Left Tolerance (ALT) is computed using the following equation:

$ALT_{xmtr} = CAL_{xmtr}$
$ALT_{xmtr} = \pm 0.50\%\ \Delta P$ Span

Error Contributor	Value	Type	Section
RA	± 0.12% ΔP Span	Random	6.8.1
CAL	± 0.50% ΔP Span	Random	6.8.2
DR	± 0.97% ΔP Span	Random	6.8.3
SPE	± 0.40% ΔP Span	Random	6.8.6
MTE	± 0.50% ΔP Span	Random	6.8.4
TE	± 2.13% ΔP Span	Random	6.8.5
As Left Tolerance (ALT)	± 0.50% ΔP Span	Random	6.8.10
As Found Tolerance (AFT)	± 1.20% ΔP Span	Random	6.8.9
Total Device Uncertainty (non-accident)	± 2.58% ΔP Span	Random	6.8.8

Transmitter Uncertainty Summary

6.9 COMPARATOR MODULE

6.9.1 Comparator's Unverified Attributes of Reference Accuracy (RA_{comp})

Per Reference 4.4.1, the comparator reference accuracy is ± 0.50% Span. Per Reference 4.6.4, the comparator is calibrated to ± 0.50% Span, and the calibration procedure verifies the attributes of linearity and hysteresis but not repeatability. Per Reference 4.6.1, the following equation is utilized to compute the repeatability portion of the comparator reference accuracy:

$$\text{Repeatability} = \pm\frac{RA_{comp}}{\sqrt{3}} = \pm\frac{0.50\%\ \text{Span}}{\sqrt{3}} = \pm\ 0.29\%\ \text{Span}$$

Therefore,

$$RA_{comp} = \pm\ 0.29\%\ \text{Span}$$

6.9.2 Comparator Calibration Tolerance (CAL_{comp})

Per Reference 4.6.4, the comparator is calibrated to ± 0.50% Span. Therefore,

$$CAL_{comp} = \pm\ 0.50\%\ \text{Span}$$

6.9.3 Comparator Drift (DR_{comp})

Per Reference 4.4.1, no drift is specified for the Hagan or NUS comparator. Per Reference 4.6.1, if no drift is specified for a device, a default value of ± 1.00% Span may be used. Based on historical data, Hagan comparator drift is ± 0.25% Span (Attachment B). If the default value bounds the value obtained through a review of the historical data, the default value of ± 1.00% Span may be used for comparator drift (Reference 4.6.1). Therefore, the default value of ± 1.00% Span is used for comparator drift for the NUS and Hagan comparators.

$$DR_{comp} = \pm\ 1.00\%\ \text{Span}$$

6.9.4 Comparator M&TE Effect (MTE_{comp})

Per References 4.5.1 through 4.5.6, one DMM with an accuracy of ± 0.25% Reading is used to calibrate the comparator. For conservatism, a maximum reading of 5 Vdc is used to compute the accuracy of the DMM as follows:

$$MTE_{comp} = \pm (0.25\% \text{ Reading})\left(\frac{5 \text{ Vdc}}{4 \text{ Vdc}}\right) = \pm 0.31\% \text{ Span}$$

6.9.5 Comparator Temperature Effect (TE_{comp})

Per Reference 4.4.1, the NUS comparator temperature effect is given as ± 0.04% Span per 1°C change in temperature from the temperature at the time of calibration, and no temperature effect is specified for the Hagan comparator. Per Reference 4.6.1, if no temperature effect is specified for a device, a default value of ± 0.50% Span may be used for the temperature effect. Per Design Input 5.6, a change in temperature of 42°F (23.33°C) is used to compute the comparator temperature effect. Therefore,

$$TE_{comp} = \pm 0.04\% \text{ Span}\left(\frac{23.33°C}{1°C}\right)$$

$$TE_{comp} = \pm 0.93\% \text{ Span}$$

Since either Westinghouse Hagan or NUS comparator may be used, the most restrictive temperature effect (NUS comparator) is used in this calculation.

6.9.6 Comparator Power Supply Effect (PSE_{comp})

Per Reference 4.4.1, no uncertainty for the comparator power supply effect is specified. Since the comparators are powered by regulated instrument buses, the comparator power supply effect is considered to be negligible. Therefore,

$$PSE_{comp} = N/A$$

6.9.7 Comparator Total Device Uncertainty (TDU_{comp})

Total Device Uncertainty is computed using the following equation:

$$TDU_{comp} = \pm\sqrt{(CAL_{comp} + MTE_{comp})^2 + RA_{comp}^{\ 2} + DR_{comp}^{\ 2} + TE_{comp}^{\ 2}}$$

$$TDU_{comp} = \pm\ 1.61\%\ \text{Span}$$

6.9.8 Comparator As Found Tolerance (AFT_{comp})

Per Reference 4.6.1, the As Found Tolerance (AFT) is computed using the following equation:

$$AFT_{comp} = \pm\sqrt{CAL_{comp}^{\ 2} + DR_{comp}^{\ 2} + MTE_{comp}^{\ 2}}$$

$$AFT_{comp} = \pm\ 1.16\%\ \text{Span}$$

6.9.9 Comparator As Left Tolerance (ALT_{comp})

Per Reference 4.6.1, the As Left Tolerance (ALT) is computed using the following equation:

$ALT_{comp} = CAL_{comp}$
$ALT_{comp} = \pm 0.50\%$ Span

Error Contributor	Value	Type	Section
RA	± 0.29% Span	Random	6.9.1
CAL	± 0.50% Span	Random	6.9.2
DR	± 1.00% Span	Random	6.9.3
MTE	± 0.31% Span	Random	6.9.4
TE	± 0.93% Span	Random	6.9.5
As Left Tolerance (ALT)	± 0.50% Span	Random	6.9.9
As Found Tolerance (AFT)	± 1.16% Span	Random	6.9.8
Total Device Uncertainty (non-accident)	± 1.61% Span	Random	6.9.7

Comparator Module Uncertainty Summary

6.10 ISOLATOR MODULE

6.10.1 Isolator's Unverified Attributes of Reference Accuracy (RA_{isol})

Per Reference 4.4.1, the reference accuracy of the NUS isolator is ± 0.10% Full Scale, and the reference accuracy of the Hagan isolator is not specified. Per Reference 4.6.1, if the reference accuracy of a device is not specified, the reference accuracy term is set equal to the calibration tolerance of the isolator. Per Reference 4.6.4, the isolator is calibrated to ± 0.50% Span, and the calibration procedure verifies the attribute of linearity but not hysteresis or repeatability. Per Reference 4.6.1, the following equation is utilized to compute the repeatability and hysteresis portions of the isolator reference accuracy:

$$\text{Repeatability} = \pm\frac{RA_{isol}}{\sqrt{3}} = \pm\frac{0.50\%\ \text{Span}}{\sqrt{3}} = \pm\ 0.29\%\ \text{Span}$$

$$\text{Hysteresis} = \pm\frac{RA_{isol}}{\sqrt{3}} = \pm\frac{0.50\%\ \text{Span}}{\sqrt{3}} = \pm\ 0.29\%\ \text{Span}$$

Therefore,

$$RA_{isol} = \pm\ 0.41\%\ \text{Span}$$

6.10.2 Isolator Calibration Tolerance (CAL_{isol})

Per Reference 4.6.4, the isolator is calibrated to ± 0.50% Span. Therefore,

$$CAL_{isol} = \pm\ 0.50\%\ \text{Span}$$

6.10.3 Isolator Drift (DR_{isol})

Per Reference 4.4.1, no uncertainty for isolator drift is specified. The default value of ± 1.00% Span is used to represent isolator drift (Reference 4.6.1) Therefore,

$$DR_{isol} = \pm\ 1.00\%\ \text{Span}$$

6.10.4 Isolator M&TE Effect (MTE_{isol})

Per References 4.5.1 through 4.5.6, two DMMs are used to calibrate the isolator. Each DMM has an accuracy of ± 0.25% Reading. The total MTE term is the SRSS of the individual DMM accuracy terms. For conservatism, a maximum reading of 5 Vdc is used to compute the accuracy of the DMMs as follows:

$$MTE_{isol} = \pm\sqrt{\left((2)\left[(0.25\%\ \text{Reading})\left(\frac{5\ \text{Vdc}}{4\ \text{Vdc}}\right)\right]^2\right)}$$

$$MTE_{isol} = \pm\ 0.44\%\ \text{Span}$$

6.10.5 Isolator Temperature Effect (TE_{isol})

Per Reference 4.4.1, the NUS isolator temperature effect is given as ± 0.01% Full Scale per 1°C change in temperature from the temperature at the time of calibration, and the temperature effect for the Hagan isolator is not specified. Per Reference 4.6.1, if the temperature effect for a device is not specified, a default value of ± 0.50% Span may be used for the temperature effect term. Per Design Input 5.6, a change in temperature of 42°F (23.33°C) is used to compute the isolator temperature effect. Therefore,

$$TE_{isol} = \pm\ 0.01\%\ \text{Full Scale}\left(\frac{5\ \text{Vdc}}{100\%\ \text{Full Scale}}\right)\left(\frac{100\%\ \text{Span}}{4\ \text{Vdc}}\right)\left(\frac{23.33°\text{C}}{1°\text{C}}\right)$$

$$TE_{isol} = \pm\ 0.29\%\ \text{Span}$$

Since either Westinghouse Hagan or NUS module may be used, the most restrictive temperature effect (default value of ± 0.50% Span) is used for the isolator temperature effect.

$$TE_{isol} = \pm\ 0.50\%\ \text{Span}$$

6.10.6 Isolator Power Supply Effect (PSE_{isol})

Per Reference 4.4.1, no uncertainty for the isolator power supply effect is specified. Since the isolators are powered by regulated instrument buses, the isolator power supply effect is considered to be negligible. Therefore,

$$PSE_{isol} = N/A$$

6.10.7 Isolator Total Device Uncertainty (TDU_{isol})

Total Device Uncertainty is computed using the following equation:

$$TDU_{isol} = \pm\sqrt{(CAL_{isol} + MTE_{isol})^2 + RA_{isol}^{\ 2} + DR_{isol}^{\ 2} + TE_{isol}^{\ 2}}$$

$$TDU_{isol} = \pm\ 1.52\%\ \text{Span}$$

6.10.8 Isolator As Found Tolerance (AFT_{isol})

Per Reference 4.6.1, the As Found Tolerance (AFT) is computed using the following equation:

$$AFT_{isol} = \pm\sqrt{CAL_{isol}^{\ 2} + DR_{isol}^{\ 2} + MTE_{isol}^{\ 2}}$$

$$AFT_{isol} = \pm\ 1.20\%\ \text{Span}$$

6.10.9 Isolator As Left Tolerance (ALT_{isol})

Per Reference 4.6.1, the As Left Tolerance (ALT) is computed using the following equation:

$ALT_{isol} = CAL_{isol}$
$ALT_{isol} = \pm 0.50\%$ Span

Error Contributor	Value	Type	Section
RA	± 0.41% Span	Random	6.10.1
CAL	± 0.50% Span	Random	6.10.2
DR	± 1.00% Span	Random	6.10.3
MTE	± 0.44% Span	Random	6.10.4
TE	± 0.50% Span	Random	6.10.5
As Left Tolerance (ALT)	± 0.50% Span	Random	6.10.9
As Found Tolerance (AFT)	± 1.20% Span	Random	6.10.8
Total Device Uncertainty (non-accident)	± 1.52% Span	Random	6.10.7

Isolator Module Uncertainty Summary

6.11 SQUARE ROOT MODULE

6.11.1 Square Root Module's Unverified Attributes of Reference Accuracy (RA_{sqrt})

Per Reference 4.4.1, the reference accuracy of the NUS square root module is ± 0.50% Span, and the reference accuracy of the Hagan square root module is not specified. Per Reference 4.6.1, if the reference accuracy of a device is not specified, the reference accuracy term is set equal to the calibration tolerance of the square root module. Per Reference 4.6.4, the square root module is calibrated to ± 0.50% Span, and the calibration procedure verifies the attribute of linearity but not hysteresis or repeatability. Per Reference 4.6.1, the following equation is utilized to compute the repeatability and hysteresis portions of the square root module reference accuracy:

$$\text{Repeatability} = \pm\frac{RA_{sqrt}}{\sqrt{3}} = \pm\frac{0.50\%\ \text{Span}}{\sqrt{3}} = \pm 0.29\%\ \text{Span}$$

$$\text{Hysteresis} = \pm\frac{RA_{sqrt}}{\sqrt{3}} = \pm\frac{0.50\%\ \text{Span}}{\sqrt{3}} = \pm 0.29\%\ \text{Span}$$

Therefore,

$$RA_{sqrt} = \pm 0.41\%\ \text{Span}$$

6.11.2 Square Root Module Calibration Tolerance (CAL_{sqrt})

Per Reference 4.6.4, the square root module is calibrated to ± 0.50% Span. Therefore,

$$CAL_{sqrt} = \pm 0.50\%\ \text{Span}$$

6.11.3 Square Root Module Drift (DR_{sqrt})

Per Reference 4.4.1, no uncertainty for drift is specified for the NUS or Hagan square root module. Per Reference 4.6.1, a default value of ± 1.00% Span may be used to represent the expected drift for the total rack. The comparators already include the default drift value of ± 1.00% Span. Therefore, no additional drift is included for the square root module.

$$DR_{sqrt} = \text{N/A}$$

6.11.4 Square Root Module M&TE Effect (MTE_{sqrt})

Per References 4.5.1 through 4.5.6, two DMMs are used to calibrate the square root module. Each DMM has an accuracy of ± 0.25% Reading. The total MTE term is the SRSS of the individual DMM accuracy terms. For conservatism, a maximum reading of 5 Vdc is used to compute the accuracy of the DMMs as follows:

$$MTE_{sqrt} = \pm\sqrt{\left((2)\left[(0.25\%\ \text{Reading})\left(\frac{5\ \text{Vdc}}{4\ \text{Vdc}}\right)\right]^2\right)}$$

$$MTE_{sqrt} = \pm\ 0.44\%\ \text{Span}$$

6.11.5 Square Root Module Temperature Effect (TE_{sqrt})

Per Reference 4.4.1, the NUS square root module temperature effect is given as ± 0.03% Full Scale per 1°C change in temperature from the temperature at the time of calibration, and the temperature effect for the Hagan square root module is ± 0.01% Span per 1°C. For conservatism, the temperature effect associated with the NUS module is used. Per Design Input 5.6, a change in temperature of 42°F (23.33°C) is used to compute the square root module temperature effect. Therefore,

$$TE_{sqrt} = \pm\ 0.03\%\ \text{Full Scale}\left(\frac{5\ \text{Vdc}}{100\%\ \text{Full Scale}}\right)\left(\frac{100\%\ \text{Span}}{4\ \text{Vdc}}\right)\left(\frac{23.33°\text{C}}{1°\text{C}}\right)$$

$$TE_{sqrt} = \pm\ 0.87\%\ \text{Span}$$

6.11.6 Square Root Module Power Supply Effect (PSE_{sqrt})

Per Reference 4.4.1, the power supply effect for the NUS square root module is given as ± 0.01% Reading for a variation of ± 10% in supply voltage, and no uncertainty for the Hagan square root module power supply effect is specified. Since the square root module is powered by regulated instrument buses, the square root module power supply effect is considered to be negligible. Therefore,

$$PSE_{sqrt} = \text{N/A}$$

6.11.7 Square Root Module Total Device Uncertainty (TDU_{sqrt})

Total Device Uncertainty is computed using the following equation:

$$TDU_{sqrt} = \pm\sqrt{(CAL_{sqrt} + MTE_{sqrt})^2 + RA_{sqrt}^{\ 2} + TE_{sqrt}^{\ 2}}$$

$$TDU_{sqrt} = \pm\ 1.34\%\ \text{Span}$$

6.11.8 Square Root Module As Found Tolerance (AFT_{sqrt})

Per Reference 4.6.1, the As Found Tolerance (AFT) is computed using the following equation:

$$AFT_{sqrt} = \pm\sqrt{CAL_{sqrt}^{\ 2} + MTE_{sqrt}^{\ 2}}$$

$$AFT_{sqrt} = \pm\ 0.67\%\ \text{Span}$$

6.11.9 Square Root Module As Left Tolerance (ALT_{sqrt})

Per Reference 4.6.1, the As Left Tolerance (ALT) is computed using the following equation:

$ALT_{sqrt} = CAL_{sqrt}$
$ALT_{sqrt} = \pm 0.50\%$ Span

Error Contributor	Value	Type	Section
RA	± 0.41% Span	Random	6.11.1
CAL	± 0.50% Span	Random	6.11.2
MTE	± 0.44% Span	Random	6.11.4
TE	± 0.87% Span	Random	6.11.5
As Left Tolerance (ALT)	± 0.50% Span	Random	6.11.9
As Found Tolerance (AFT)	± 0.67% Span	Random	6.11.8
Total Device Uncertainty (non-accident)	± 1.34% Span	Random	6.11.7

Square Root Module Uncertainty Summary

6.12 INDICATOR

6.12.1 Indicator's Unverified Attributes of Reference Accuracy (RA_{ind})

Per Reference 4.4.2, the reference accuracy of the indicator is ± 2.00% Span and includes the effects of linearity, hysteresis, and repeatability (Design Input 5.4). Per References 4.5.1 through 4.5.6 and 4.6.4, the indicator is calibrated to ± 2.00% Span at eleven points (6 up and 5 down). Therefore, the calibration procedure verifies the attributes of linearity and hysteresis but not repeatability. Per Reference 4.6.1, the following equation is utilized to compute the repeatability portion of the indicator reference accuracy:

$$\text{Repeatability} = \pm\frac{RA_{ind}}{\sqrt{3}} = \pm\frac{2.00\%\ \text{Span}}{\sqrt{3}} = \pm\ 1.15\%\ \text{Span}$$

Therefore,

$$RA_{ind} = \pm\ 1.15\%\ \text{Span}$$

6.12.2 Indicator Calibration Tolerance (CAL_{ind})

Per Reference 4.6.4, the indicator is calibrated to ± 2.00% Span. Therefore,

$$CAL_{ind} = \pm\ 2.00\%\ \text{Span}$$

6.12.3 Indicator Drift (DR_{ind})

Per Attachment C, indicator drift is specified as ± 1.00% Span per year. Per Reference 4.6.1, the time interval between calibrations is 22.5 month (18 months + 25%), and the following equation is used to compute the indicator drift:

$$DR_{ind} = \pm\sqrt{1.00\%\ \text{Span}\left(\frac{22.5\ \text{months}}{12\ \text{months}}\right)}$$

$$DR_{ind} = \pm\ 1.37\%\ \text{Span}$$

6.12.4 Indicator M&TE Effect (MTE_{ind})

Per References 4.5.1 through 4.5.6, one DMM with an accuracy of ± 0.25% Reading is used to calibrate the indicator. The calibration points are cardinal points on the indicator scale per References 4.5.1 through 4.5.6. Therefore, the indicator resolution is not included in the MTE term. For conservatism, a maximum reading of 5 Vdc is used to compute the accuracy of the DMM as follows:

$$MTE_{ind} = \pm(0.25\%\ \text{Reading})\left(\frac{5\ \text{Vdc}}{4\ \text{Vdc}}\right) = \pm 0.31\%\ \text{Span}$$

6.12.5 Indicator Temperature Effect (TE_{ind})

Per Attachment C, the indicator temperature effect is specified as ± 0.10% Span per 1°C change from the temperature at the time of calibration. Per Design Input 5.2, a change in temperature of 9.4°C is used to compute the indicator temperature effect.

$$TE_{ind} = \pm 0.10\%\ \text{Span}\left(\frac{9.4°\text{C}}{1°\text{C}}\right)$$

$$TE_{ind} = \pm 0.94\%\ \text{Span}$$

6.12.6 Indicator Power Supply Effect (PSE_{ind})

Per References 4.1.1 through 4.1.3, the indicators are not powered by an external source. Therefore, there is no indicator power supply effect.

$$PSE_{ind} = \text{N/A}$$

6.12.7 Indicator Readability (RD_{ind})

Per Reference 4.6.1, the indicator readability term is ½ of the smallest indicator scale demarcation. Per References 4.1.4 and 4.1.5, the indicator has a scale of 0 to 4×10^6 lbm / hr with minor demarcations of 0.2×10^6 lbm / hr. Therefore,

$$RD_{ind} = \pm\left(\frac{0.2 \times 10^6 \text{ lbm / hr}}{2}\right)\left(\frac{100\% \text{ Span}}{4 \times 10^6 \text{ lbm / hr}}\right) = \pm\, 2.50\% \text{ Span}$$

6.12.8 Indicator Total Device Uncertainty (TDU_{ind})

Total Device Uncertainty is computed using the following equation:

$$TDU_{ind} = \pm\sqrt{(CAL_{ind} + MTE_{ind})^2 + RA_{ind}^{\ 2} + DR_{ind}^{\ 2} + TE_{ind}^{\ 2} + RD_{ind}^{\ 2}}$$

$$TDU_{ind} = \pm\, 3.96\% \text{ Span}$$

6.12.9 Indicator As Found Tolerance (AFT_{ind})

Per Reference 4.6.1, the As Found Tolerance (AFT) is computed using the following equation:

$$AFT_{ind} = \pm\sqrt{CAL_{ind}^{\ 2} + DR_{ind}^{\ 2} + MTE_{ind}^{\ 2}}$$

$$AFT_{ind} = \pm\, 2.44\% \text{ Span}$$

6.12.10 Indicator As Left Tolerance (ALT_{ind})

Per Reference 4.6.1, the As Left Tolerance (ALT) is computed using the following equation:

$ALT_{ind} = CAL_{ind}$
$ALT_{ind} = \pm 2.00\%$ Span

Error Contributor	Value	Type	Section
RA	± 1.15% Span	Random	6.12.1
CAL	± 2.00% Span	Random	6.12.2
DR	± 1.37% Span	Random	6.12.3
MTE	± 0.31% Span	Random	6.12.4
TE	± 0.94% Span	Random	6.12.5
RD	± 2.50% Span	Random	6.12.7
As Left Tolerance (ALT)	± 2.00% Span	Random	6.12.10
As Found Tolerance (AFT)	± 2.44% Span	Random	6.12.9
Total Device Uncertainty (non-accident)	± 3.96% Span	Random	6.12.8

Indicator Uncertainty Summary

6.13 RECORDER

6.13.1 Recorder's Unverified Attributes of Reference Accuracy (RA_{rec})

Per References 4.1.7 through 4.1.9, the recorder input span is 1 to 5 Vdc. Therefore, the specifications for a 6 Vdc input range are used to compute the recorder Reference Accuracy. Per Reference 4.7.11, for a 6 Vdc input range, the maximum resolution of the input is 1 mVdc (0.001 Vdc) and the Measurement Accuracy for the recorder is given as ± (0.3% of reading + 3 digits). Therefore, the recorder Reference Accuracy (RA_{rec}) is calculated as follows:

$$RA_{rec} = \pm (0.3\% \text{ Reading} + 3 \text{ digits})$$

$$RA_{rec} = \pm (0.3\% \times 5 \text{ Vdc} + 3 \text{ digits})$$

$$RA_{rec} = \pm (0.015 \text{ Vdc} + 0.003 \text{ Vdc}) = \pm 0.018 \text{ Vdc}$$

$$RA_{rec} = \pm \left(\frac{0.018 \text{ Vdc}}{4 \text{ Vdc}} \right) 100\% \text{ Span}$$

$$RA_{rec} = \pm 0.45\% \text{ Span}$$

6.13.2 Recorder Calibration Tolerance (CAL_{rec})

Per Reference 4.6.4, the recorder is calibrated to ± 0.50% Span. Therefore,

$$CAL_{rec} = \pm 0.50\% \text{ Span}$$

6.13.3 Recorder Drift (DR_{rec})

Per Section 5.19, no recorder drift is specified and recorder drift is assumed to be included in the Reference Accuracy and Temperature Effect specifications. Therefore,

$$DR_{rec} = N/A$$

6.13.4 Recorder M&TE Effect (MTE_{rec})

Per References 4.5.1 through 4.5.3, one DMM with an accuracy of ± 0.25% Reading is used to calibrate the recorder. For conservatism, a maximum reading of 5 Vdc is used to compute the accuracy of the DMM as follows:

$$MTE_{rec} = \pm\left(0.25\%\ \text{Reading}\right)\left(\frac{5\ \text{Vdc}}{4\ \text{Vdc}}\right) = \pm 0.31\%\ \text{Span}$$

6.13.5 Recorder Temperature Effect (TE_{rec})

Per Reference 4.7.11, the Recorder Ambient Temperature Effect is given as ± (0.1% of reading + 1 digit) for ambient temperature variation of 10°C (18°F). Per Reference 4.7.11, the recorder is located in the Control Room. Per References 4.1.7 through 4.1.9, the input range of the recorder is 1 to 5 Vdc. Per Section 5.2, the Control Room is maintained between 60°F and 77°F (ΔT of 17°F). The 18°F temperature variation is bounding for this application. Therefore, the Recorder Temp Effect (TE_{rec}) is calculated as follows:

$$TE_{rec} = \pm\ (0.1\%\ \text{Reading} + 1\ \text{digit})\ (17°F / 18°F)$$

$$TE_{rec} = \pm\ (0.1\% \times 5\ \text{Vdc} + 1\ \text{digit})\ (17°F / 18°F)$$

$$TE_{rec} = \pm\ (0.005\ \text{Vdc} + 0.001\ \text{Vdc})\ (17°F / 18°F)$$

$$TE_{rec} = \pm\ 0.006\ \text{Vdc}$$

$$TE_{rec} = \pm\left(\frac{0.006\ \text{Vdc}}{4\ \text{Vdc}}\right)100\%\ \text{Span}$$

$$TE_{rec} = \pm\ 0.15\%\ \text{Span}$$

6.13.6 Recorder Power Supply Effect (PSE_{rec})

Per Reference 4.7.11, the power supply effect for a variation within 90 to 132 Vac is less than 1 digit. Per Reference 4.2.1, power variations will remain within this band. Per Reference 4.6.1, uncertainties less than or equal to ± 0.05% of Span have a negligible effect on calculation results and may be omitted from the calculation. Therefore,

$$PSE_{rec} = \text{N/A}$$

6.13.7 Recorder Readability (RD_{rec})

Per Reference 4.7.11, for a 6 Vdc Volt Range recorder, minimum recorder resolution is 0.001 VDC. The recorders have an input span of 4 Vdc (1 to 5 Vdc). Therefore,

$$RD_{rec} = \pm \frac{0.001\,\text{Vdc}}{4.000\,\text{Vdc}} = \pm 0.03\%\ \text{Span}$$

Per Reference 4.6.1, uncertainties less than or equal to ± 0.05% of Span have a negligible effect on calculation results and may be omitted from the calculation. Therefore,

$$RD_{rec} = \text{N/A}$$

6.13.8 Recorder Total Device Uncertainty (TDU_{rec})

Total Device Uncertainty is computed using the following equation:

$$TDU_{rec} = \pm\sqrt{(CAL_{rec} + MTE_{rec})^2 + RA_{rec}^{\ 2} + TE_{rec}^{\ 2}}$$

$$TDU_{rec} = \pm 0.94\%\ \text{Span}$$

6.13.9 Recorder As-Found Tolerance (AFT_{rec})

Per Reference 4.6.1, the As Found Tolerance (AFT) is computed using the following equation:

$$AFT_{rec} = \pm\sqrt{CAL_{rec}^{2} + MTE_{rec}^{2}}$$

$$AFT_{rec} = \pm 0.59\% \text{ Span}$$

6.13.10 Recorder As Left Tolerance (ALT_{rec})

Per Reference 4.6.1, the As Left Tolerance (ALT) is computed using the following equation:

$$ALT_{rec} = CAL_{rec}$$

$$ALT_{rec} = \pm 0.50\% \text{ Span}$$

Error Contributor	Value	Type	Section
RA	± 0.45% Span	Random	6.13.1
CAL	± 0.50% Span	Random	6.13.2
DR	N/A	N/A	6.13.3
MTE	± 0.31% Span	Random	6.13.4
TE	± 0.15% Span	Random	6.13.5
RD	N/A	N/A	6.13.7
As Left Tolerance (ALT)	± 0.50% Span	Random	6.13.10
As Found Tolerance (AFT)	± 0.59% Span	Random	6.13.9
Total Device Uncertainty (non-accident)	± 0.94% Span	Random	6.13.8

Recorder Uncertainty Summary

7.0 TOTAL LOOP UNCERTAINTY (TLU)

7.1 TOTAL LOOP UNCERTAINTY - PLANT NORMAL

7.1.1 Total Loop Uncertainty - Input to ERFIS

Per Reference 4.6.1, the total loop uncertainty at the input to ERFIS is computed with the following equation:

$$TLU_{ERFIS} = \pm\sqrt{PE^2 + TDU_{xmtr}^{\ 2} + TDU_{isol}^{\ 2}} + PME_{DENSITY} + PME_{PIPING} + FC$$

Note: The most conservative transmitter uncertainty (See Section 6.8) is used to compute the total loop uncertainty.

Flow Rate (% Flow Span)	PE (% ΔP Span)	TDU_{xmtr} (% ΔP Span)	TDU_{isol} (% ΔP Span)	TLU_{random} (% ΔP Span)
85.75%	0.37%	2.58%	1.52%	3.02%
77.18%	0.30%	2.58%	1.52%	3.01%
68.60%	0.24%	2.58%	1.52%	3.00%
60.03%	0.18%	2.58%	1.52%	3.00%
42.88%	0.09%	2.58%	1.52%	3.00%

Flow Rate (% Flow Span)	FC (% ΔP Span)	PME_{PIPING} (% ΔP Span)	PME_{PIPING} (% ΔP Span)	$PME_{DENSITY}$ (% ΔP Span)	positive TLU (% ΔP Span)	negative TLU (% ΔP Span)
85.75%	-0.95%	1.48%	-1.46%	0.01%	4.51%	-5.43%
77.18%	-0.77%	1.20%	-1.19%	-0.59%	4.21%	-5.56%
68.60%	-0.61%	0.95%	-0.94%	-0.94%	3.95%	-5.49%
60.03%	-0.46%	0.72%	-0.72%	-1.06%	3.72%	-5.24%
42.88%	-0.24%	0.37%	-0.37%	-0.95%	3.37%	-4.55%

7.1.2 Total Loop Uncertainty - Indicator FI-476, 477, 486, 487, 496, AND 497

Per Reference 4.6.1, the total loop uncertainty associated with the indicator is computed with the following equation:

$$TLU_{ind} = \pm\sqrt{PE^2 + TDU_{xmtr}^{\ 2} + TDU_{sqrt}^{\ 2} + TDU_{isol}^{\ 2} + TDU_{ind}^{\ 2}} + PME_{DENSITY} + PME_{PIPING} + FC$$

Per Design Input 5.11, the transmitter uncertainties are converted from % ΔP Span to % Flow Span with the following equation:

$$TDU_{xmtr}\ (\%\ \text{Flow Span}) = 100\left(\frac{TDU_{xmtr}\ (\%\ \Delta P\ \text{Span})}{2(\text{Flow Rate})}\right)$$

where TDU_{xmtr} (% ΔP Span) = ± 2.58% ΔP Span

Note: The most conservative transmitter uncertainty (See Section 6.8) is used to compute the total loop uncertainty.

Flow Rate (% Flow Span)	PE (% Flow Span)	TDU_{xmtr} (% Flow Span)	TDU_{sqrt} (% Flow Span)	TDU_{isol} (% Flow Span)	TDU_{ind} (% Flow Span)	TLU_{random} (% Flow Span)
85.75%	0.21%	1.50%	1.34%	1.52%	3.96%	4.70%
77.18%	0.19%	1.67%	1.34%	1.52%	3.96%	4.76%
68.60%	0.17%	1.88%	1.34%	1.52%	3.96%	4.83%
60.03%	0.15%	2.15%	1.34%	1.52%	3.96%	4.94%
42.88%	0.11%	3.01%	1.34%	1.52%	3.96%	5.37%

Flow Rate (% Flow Span)	FC (% Flow Span)	PME_{PIPING} (% Flow Span)	PME_{PIPING} (% Flow Span)	$PME_{DENSITY}$ (% Flow Span)	positive TLU (% Flow Span)	negative TLU (% Flow Span)
85.75%	-0.55%	0.86%	-0.86%	0.01%	5.57%	-6.11%
77.18%	-0.50%	0.77%	-0.77%	-0.38%	5.53%	-6.41%
68.60%	-0.44%	0.69%	-0.69%	-0.69%	5.52%	-6.65%
60.03%	-0.39%	0.60%	-0.60%	-0.89%	5.54%	-6.82%
42.88%	-0.28%	0.43%	-0.43%	-1.12%	5.80%	-7.20%

7.1.3 Total Loop Uncertainty - Recorder FR-478, 488, AND 498

Per Reference 4.6.1, the total loop uncertainty associated with the recorder is computed with the following equation:

$$TLU_{rec} = \pm\sqrt{PE^2 + TDU_{xmtr}^{\ 2} + TDU_{sqrt}^{\ 2} + TDU_{isol}^{\ 2} + TDU_{rec}^{\ 2}} + PME_{DENSITY} + PME_{PIPING} + FC$$

Per Design Input 5.11, the transmitter uncertainties are converted from % ΔP Span to % Flow Span with the following equation:

$$TDU_{xmtr}\ (\%\ \text{Flow Span}) = 100\left(\frac{TDU_{xmtr}\ (\%\ \Delta P\ \text{Span})}{2(\text{Flow Rate})}\right)$$

where TDU_{xmtr} (% ΔP Span) = ± 2.58% ΔP Span

Note: The most conservative transmitter uncertainty (See Section 6.8) is used to compute the total loop uncertainty.

Flow Rate (% Flow Span)	PE (% Flow Span)	TDU_{xmtr} (% Flow Span)	TDU_{sqrt} (% Flow Span)	TDU_{isol} (% Flow Span)	TDU_{rec} (% Flow Span)	TDU_{random} (% Flow Span)
85.75%	0.21%	1.50%	1.34%	1.53%	0.94%	2.70%
77.18%	0.19%	1.67%	1.34%	1.52%	0.94%	2.80%
68.60%	0.17%	1.88%	1.34%	1.52%	0.94%	2.92%
60.03%	0.15%	2.15%	1.34%	1.52%	0.94%	3.10%
42.88%	0.11%	3.01%	1.34%	1.52%	0.94%	3.75%

Flow Rate (% Flow Span)	FC (% Flow Span)	PME_{PIPING} (% Flow Span)	PME_{PIPING} (% Flow Span)	$PME_{DENSITY}$ (% Flow Span)	Positive TLU (% Flow Span)	Negative TLU (% Flow Span)
85.75%	-0.55%	0.86%	-0.86%	0.01%	3.57%	-4.11%
77.18%	-0.50%	0.77%	-0.77%	-0.38%	3.57%	-4.45%
68.60%	-0.44%	0.69%	-0.69%	-0.69%	3.61%	-4.74%
60.03%	-0.39%	0.60%	-0.60%	-0.89%	3.70%	-4.98%
42.88%	-0.28%	0.43%	-0.43%	-1.12%	4.18%	-5.58%

7.1.4 Total Loop Uncertainty - Comparators

The comparator uncertainty is computed in Section 7.3.

7.2 TOTAL LOOP UNCERTAINTY - ACCIDENT

Per Section 6.1, accident effects are not considered for these loops.

7.3 TOTAL LOOP UNCERTAINTY - POST SEISMIC

FC-478A, 478B, 478C, 478D, 488A, 488B, 488C, 488D, 498A, 498B, 498C, 498D

The comparators in each loop provide an alarm on feedwater flow greater than steam flow, an alarm on feedwater flow less than steam flow, and a steam flow / feedwater flow mismatch reactor trip signal. Per Section 7.3.2 of Reference 4.2.3, the random and bias steam flow uncertainties are as follows:

Flow (% Flow)	Flow (% Flow Span)	PE (% Flow Span)	FC_{RANDOM} Uncertainty (% Flow Span)	TDU_{xmtr} (% Flow Span)	TDU_{sqrt} (% Flow Span)	SE_{xmtr} (% Flow Span)
100%	85.75%	0.64%	0.56%	1.69%	1.42%	0.81%
90%	77.18%	0.58%	0.54%	1.87%	1.42%	0.90%
80%	68.60%	0.51%	0.51%	2.11%	1.42%	1.01%
70%	60.03%	0.45%	0.47%	2.41%	1.42%	1.16%
50%	42.88%	0.32%	0.36%	3.37%	1.42%	1.62%

Flow (% Flow)	Flow (% Flow Span)	SF_{random} (% Flow Span)	pos PME (% Flow Span)	neg PME (% Flow Span)
100%	85.75%	2.51%	0.98%	-0.86%
90%	77.18%	2.64%	0.83%	-1.11%
80%	68.60%	2.83%	0.77%	-1.33%
70%	60.03%	3.08%	0.70%	-1.41%
50%	42.88%	4.03%	0.53%	-1.28%

Per Design Input 5.11, the feedwater flow transmitter uncertainties are converted from % ΔP Span to % Flow Span with the following equation:

$$TDU_{xmtr}\ (\%\ \text{Flow Span}) = 100\left(\frac{TDU_{xmtr}\ (\%\ \Delta P\ \text{Span})}{2(\text{Flow Rate})}\right)$$

where,

TDU_{xmtr} (% ΔP Span) = ± 2.58% ΔP Span (Section 6.8.8)
Flow Rate = fraction of actual flow (e.g. 85.75% = 0.8575)

The same equation is used to convert the feedwater flow transmitter Seismic Effect (SE_{xmtr} = ± 1.25% ΔP Span per Section 6.2) to % Flow Span.

Note: The most conservative transmitter uncertainty (See Section 6.8) is used to compute the total loop uncertainty.

Flow Rate (% Flow Span)	SE_{xmtr} (% Flow Span)	TDU_{xmtr} (% Flow Span)
85.75%	0.73%	1.50%
77.18%	0.81%	1.67%
68.60%	0.91%	1.88%
60.03%	1.04%	2.15%
42.88%	1.46%	3.01%

The following equation is used to compute the overall total loop uncertainties associated with each setpoint:

$$TLU_{comp} = \pm\sqrt{PE^2 + SF_{random}{}^2 + TDU_{xmtr}{}^2 + TDU_{sqrt}{}^2 + TDU_{comp}{}^2 + SE_{xmtr}{}^2} + PME_{DENSITY} + PME_{PIPING} + FC + SF\ pos\ PME + SF\ neg\ PME$$

Flow (% Flow)	Flow (% Flow Span)	PE (% Flow Span)	SF_{random} (% Flow Span)	TDU_{sqrt} (% Flow Span)	TDU_{comp} (% Flow Span)	TLU_{random} (% Flow Span)
100%	85.75%	0.21%	2.51%	1.34%	1.61%	3.68%
90%	77.18%	0.19%	2.64%	1.34%	1.61%	3.85%
80%	68.60%	0.17%	2.80%	1.34%	1.61%	4.10%
70%	60.03%	0.15%	3.10%	1.34%	1.61%	4.44%
50%	42.88%	0.11%	4.03%	1.34%	1.61%	5.64%

Flow Rate (% Flow Span)	FC (% Flow Span)	PME_{PIPING} (% Flow Span)	PME_{PIPING} (% Flow Span)	$PME_{DENSITY}$ (% Flow Span)	SF pos PME (% Flow Span)	SF neg PME (% Flow Span)
85.75%	-0.55%	0.86%	-0.86%	0.01%	0.98%	-0.86%
77.18%	-0.50%	0.77%	-0.77%	-0.38%	0.83%	-1.11%
68.60%	-0.44%	0.69%	-0.69%	-0.69%	0.77%	-1.33%
60.03%	-0.39%	0.60%	-0.60%	-0.89%	0.70%	-1.41%
42.88%	-0.28%	0.43%	-0.43%	-1.12%	0.53%	-1.28%

Flow (% Flow)	Flow (% Flow Span)	pos TLU (% Flow Span)	neg TLU (% Flow Span)
100%	85.75%	5.53%	-5.95%
90%	77.18%	5.45%	-6.61%
80%	68.60%	5.56%	-7.25%
70%	60.03%	5.74%	-7.73%
50%	42.88%	6.60%	-8.75%

7.4 LOOP AS FOUND TOLERANCE

7.4.1 Loop As Found Tolerance - Indicator FI-476, 477, 486, 487, 496 AND 497

Per Reference 4.6.1, the following equation is used to calculate the indicator Loop As Found Tolerance ($LAFT_{ind}$):

$$LAFT_{ind} = \pm\sqrt{AFT_{xmtr}^{\ 2} + AFT_{sqrt}^{\ 2} + AFT_{isol}^{\ 2} + AFT_{ind}^{\ 2}}$$

Per Design Input 5.11, the transmitter as found tolerance is converted from % ΔP Span to % Flow Span with the following equation:

$$AFT_{xmtr}\ (\%\ \text{Flow Span}) = 100\left(\frac{AFT_{xmtr}\ (\%\ \Delta P\ \text{Span})}{2(\text{Flow Rate})}\right)$$

where AFT_{xmtr} (% ΔP Span) = ± 1.20% ΔP Span (Section 6.8.9)

For conservatism, the $LAFT_{ind}$ is computed for a flow rate of 100% which yields the most restrictive tolerance.

$LAFT_{ind}$ = ± 2.86% Flow Span

7.4.2 Loop As Found Tolerance - Recorder FR-478, 488 AND 498

Per Reference 4.6.1, the following equation is used to calculate the recorder Loop As Found Tolerance ($LAFT_{rec}$):

$$LAFT_{rec} = \pm\sqrt{AFT_{xmtr}^{2} + AFT_{sqrt}^{2} + AFT_{isol}^{2} + AFT_{rec}^{2}}$$

Per Design Input 5.11, the transmitter as found tolerance is converted from % ΔP Span to % Flow Span with the following equation:

$$AFT_{xmtr}\ (\%\ \text{Flow Span}) = 100\left(\frac{AFT_{xmtr}\ (\%\ \Delta P\ \text{Span})}{2(\text{Flow Rate})}\right)$$

where AFT_{xmtr} (% ΔP Span) = ± 1.20% ΔP Span (Section 6.8.9)

For conservatism, the $LAFT_{rec}$ is computed for a flow rate of 100% which yields the most restrictive tolerance.

$LAFT_{rec}$ = ± 1.61% Flow Span

7.4.3 Loop As Found Tolerance - Input to ERFIS

Per Reference 4.6.1, the following equation is used to calculate the ERFIS Loop As Found Tolerance ($LAFT_{ERFIS}$):

$$LAFT_{ERFIS} = \pm\sqrt{AFT_{xmtr}^{2} + AFT_{isol}^{2}}$$

$LAFT_{ERFIS}$ = ± 1.70% ΔP Span

7.4.4 Loop As Found Tolerance - Comparators

FC-478A, 478B, 478C, 478D, 488A, 488B, 488C, 488D, 498A, 498B, 498C, 498D

Per References 4.1.1 through 4.1.3, each comparator receives an input from the steam flow loops F-474, 475, 484, 485, 494, and 495. Therefore, the Loop As Found Tolerance includes the effects of the transmitter and square root extractor, which are present in the steam flow loops. Per Reference 4.2.3, Section 6.6.9, the As Found Tolerance of the transmitter (SF_AFT_{xmtr}) in each steam flow loop is ± 0.90% ΔP Span. Per Reference 4.2.3, Section 6.8.8, the As Found Tolerance of the square root extractor (SF_AFT_{sqrt}) in the steam flow loops is ± 0.74% Span. For conservatism, the tolerance associated with the steam pressure transmitter is not included in the loop As Found Tolerance computation.

Per Reference 4.6.1, the following equation is used to calculate the comparator Loop As Found Tolerance ($LAFT_{comp}$):

$$LAFT_{comp} = \pm\sqrt{SF_AFT_{xmtr}^{\ 2} + SF_AFT_{sqrt}^{\ 2} + AFT_{xmtr}^{\ 2} + AFT_{sqrt}^{\ 2} + AFT_{comp}^{\ 2}}$$

Per Design Input 5.11, both transmitter As Found Tolerance terms are converted from % ΔP pan to % Flow Span with the following equation:

$$AFT_{xmtr}\ (\%\ \text{Flow Span}) = 100\left(\frac{AFT_{xmtr}\ (\%\ \Delta P\ \text{Span})}{2(\text{Flow Rate})}\right)$$

where AFT_{xmtr} (% ΔP Span) = ± 1.20% ΔP Span (Section 6.8.9)
SF_AFT_{xmtr}(% ΔP Span) = ± 0.90% ΔP Span (Reference 4.2.3, Section 6.6.9)

For conservatism, the $LAFT_{comp}$ is computed for a flow rate of 100% which yields the most restrictive tolerance. At 100% flow:

AFT_{xmtr} (% Flow Span) = ± 0.60% Flow Span
SF_AFT_{xmtr} (%Flow Span) = ± 0.45% Flow Span

$LAFT_{comp}$ = ± 1.70% Flow Span

7.5 GROUP AS FOUND TOLERANCE

7.5.1 Group As Found Tolerance - Indicator FI-476, 477, 486, 487, 496 AND 497

Per Reference 4.6.1, the following equation is used to calculate the indicator Group As Found Tolerance ($GAFT_{ind}$):

$$GAFT_{ind} = \pm\sqrt{AFT_{sqrt}^{2} + AFT_{isol}^{2} + AFT_{ind}^{2}}$$

$$GAFT_{ind} = \pm 2.80\% \text{ Span}$$

7.5.2 Group As Found Tolerance - Recorder FR-478, 488 AND 498

Per Reference 4.6.1, the following equation is used to calculate the recorder Group As Found Tolerance ($GAFT_{rec}$):

$$GAFT_{rec} = \pm\sqrt{AFT_{sqrt}^{2} + AFT_{isol}^{2} + AFT_{rec}^{2}}$$

$$GAFT_{rec} = \pm 1.50\% \text{ Span}$$

7.5.3 Group As Found Tolerance - Input to ERFIS

Per Reference 4.6.1, the following equation is used to calculate the ERFIS Group As Found Tolerance ($GAFT_{ERFIS}$):

$$GAFT_{ERFIS} = \pm AFT_{isol}$$

$$GAFT_{ERFIS} = \pm 1.20\% \text{ Span}$$

7.5.4 Group As Found Tolerance - Comparators

FC-478A, 478B, 478C, 478D, 488A, 488B, 488C, 488D, 498A, 498B, 498C, 498D

Per References 4.1.1 through 4.1.3, each comparator receives an input from the steam flow loops F-474, 475, 484, 485, 494, and 495. Therefore, the Group As Found Tolerance includes the effects of the square root extractor, which is present in the steam flow loops. Per Reference 4.2.3, Section 6.8.8, the As Found Tolerance of the square root extractor (SF_AFT_{sqrt}) in the steam flow loops is ± 0.74% Span. Per Reference 4.6.1, the following equation is used to calculate the comparator Group As Found Tolerance ($GAFT_{comp}$):

$$GAFT_{comp} = \pm \sqrt{SF_AFT_{sqrt}^{\ 2} + AFT_{sqrt}^{\ 2} + AFT_{comp}^{\ 2}}$$

$$GAFT_{comp} = \pm\ 1.53\%\ \text{Span}$$

8.0 DISCUSSION OF RESULTS

Feedwater Flow > Steam Flow Alarm Setpoint

FC-478C, 478D, 488C, 488D, 498C, 498D

The function of this setpoint is to provide an alarm on feedwater flow greater than steam flow. Per Reference 4.6.1, the following equation is used to calculate the maximum value for this setpoint:

$SP_{limit} \leq$ Limit - TLU

where,

SP_{limit} = calculated setpoint limit
Limit = setpoint limit
TLU = Total Loop Uncertainty

Per Section 7.3 of this calculation, the negative Total Loop Uncertainty associated with this setpoint is -8.75% Flow Span @ 42.88% Flow Span (maximum). Per Design Input 5.16, the alarm setpoint limit is 34.3% Flow Span. Therefore,

$SP_{limit} \leq$ 34.3% Flow Span -8.75% Flow Span
$SP_{limit} \leq$ 25.55% Flow Span

Per References 4.5.1 through 4.5.6, the alarm setpoint is currently set to 16% Flow Span increasing (0.64 Vdc / 4 Vdc * 100). The Margin (M) associated with this setpoint is computed as follows:

M = SP_{limit} - Calibrated Setpoint
M = 25.55% Flow Span - 16% Flow Span
M = 9.55% Flow Span

Therefore, the current alarm setpoint is conservative.

Steam Flow > Feedwater Flow Alarm Setpoint

FC-478A, 478B, 488A, 488B, 498A, 498B (switch 2)

The function of this setpoint is to provide an alarm on steam flow greater than feedwater flow before a Reactor trip signal is generated on a steam flow / feedwater flow mismatch. Per Reference 4.6.1, the following equation is used to calculate the maximum value for this setpoint:

$$SP_{limit} \leq Limit - TLU$$

where,

SP_{limit} = calculated setpoint limit
Limit= setpoint limit
TLU = Total Loop Uncertainty

The function of this alarm is to warn the operator before a reactor trip is generated on a steam flow / feedwater flow mismatch, and this alarm is provided by the same dual bistable module that provides the reactor trip signal. Any uncertainty at the input of thebistable module will offset both the reactor trip and alarm setpoints in the same direction. Therefore, the only uncertainties which need to be considered for this setpoint are those associated with the bistable which provides the reactor trip and the bistable which provides the alarm. Therefore, the total uncertainty associated with this setpoint is the square root sum of squares of two bistable uncertainty terms. Per Section 6.9.7, the uncertainty associated with one bistable is ± 1.61% Span. Therefore, the total uncertainty associated with this setpoint is -2.28% Span (negative portion of the SRSS of two ± 1.61% Span terms). Per Design Input 5.16, the alarm setpoint limit is 16% Flow Span. Therefore,

SP_{limit} ≤ 16% Flow Span -2.28% Flow Span
SP_{limit} ≤ 13.72% Flow Span

Per References 4.5.1 through 4.5.6, the alarm setpoint is currently set to 12.5% Flow Span increasing (0.50 Vdc / 4 Vdc * 100). The Margin (M) associated with this setpoint is computed as follows:

$M = SP_{limit}$ - Calibrated Setpoint
M = 13.72% Flow Span - 12.50% Flow Span
M = 1.22% Flow Span

Therefore, the current alarm setpoint is conservative.

Steam Flow / Feedwater Flow Mismatch Setpoint

FC-478A, 478B, 488A, 488B, 498A, 498B (switch 1)

The function of this setpoint is to provide a Reactor trip signal on a steam flow / feedwater flow mismatch. Per Reference 4.6.1, the following equation is used to calculate the maximum value for this setpoint:

$SP_{limit} \leq AL - TLU$

where,

SP_{limit} = calculated setpoint limit
AL = Analytical Limit
TLU = Total Loop Uncertainty

Per Section 7.3 of this calculation, the negative Total Loop Uncertainty associated with this setpoint is -8.75% Flow Span @ 42.88% Flow Span (maximum uncertainties for both steam and feedwater flow). Per Design Input 5.16, the setpoint Analytical Limit is 34.3% Flow Span. Therefore,

$SP_{limit} \leq$ 34.3% Flow Span -8.75% Flow Span
$SP_{limit} \leq$ 25.55% Flow Span

Per References 4.5.1 through 4.5.6, the setpoint is currently set to 16% Flow Span increasing (0.64 Vdc / 4 Vdc * 100). The Margin (M) associated with this setpoint is computed as follows:

$M = SP_{limit}$ - Calibrated Setpoint
M = 25.55% Flow Span - 16% Flow Span
M = 9.55% Flow Span

Per Section 7.5.4 of this calculation, the Group As Found Tolerance (GAFT) is ± 1.53% Flow Span. Per Reference 4.6.1, the Allowable Value (AV) associated with this setpoint is computed as follows:

AV ≤ SP + GAFT, where SP = calibrated setpoint
AV ≤ 16% Flow Span + 1.53% Flow Span
AV ≤ 17.53% Flow Span

The Loop As Found Tolerance (LAFT) of 1.70% Span is computed in Section 7.4.4. Per Reference 4.6.1, the Channel Operability Limit (COL) is computed with the following equation:

COL = SP + LAFT, where SP = calibrated setpoint
COL = 16% Flow Span + 1.70% Flow Span
COL = 17.70% Flow Span

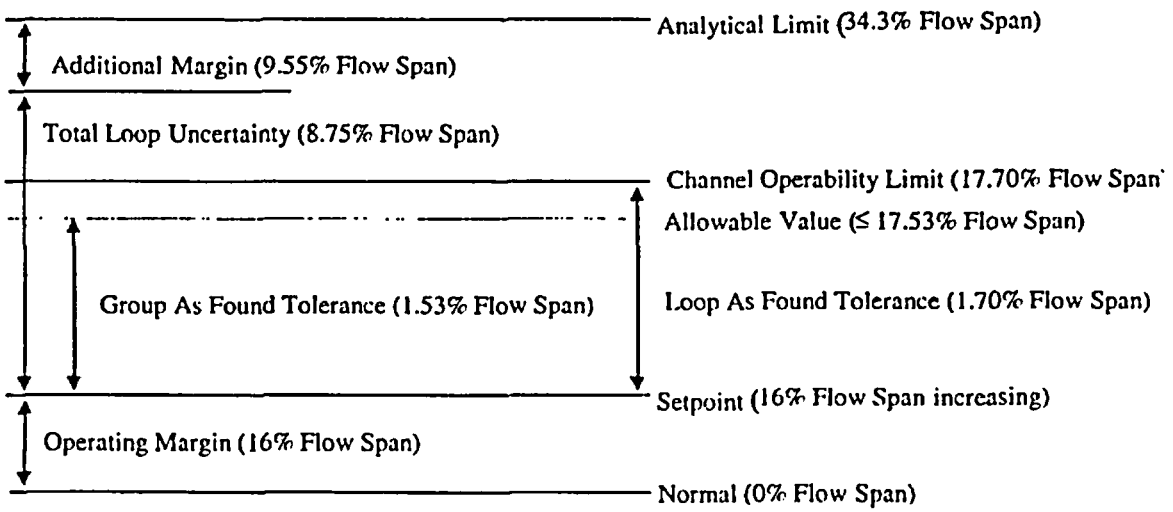

Figure 1

Steam Flow / Feedwater Flow Mismatch Reactor Trip Setpoint Diagram

Per Reference 4.7.2, the current Technical Specification Allowable Value is ≤17.65% Flow Span and the current Technical Specification setpoint is 16% Flow Span increasing. The current Technical Specification setpoint is conservative. **The current Allowable Value is non-conservative and should be revised to a value within the limit computed in this calculation. This action has been initiated and is being tracked per LDCR #01-0007.**

8.1 IMPACT ON IMPROVED TECHNICAL SPECIFICATIONS

Based on the results of this calculation, the Technical Specification Allowable Value for the Steam Flow / Feedwater Flow Mismatch Reactor Trip setpoint should be revised to a value within the limit computed in this calculation. This action has been initiated and is being tracked per LDCR #01-0007.

8.2 IMPACT ON UFSAR

This calculation results in no changes to the UFSAR.

8.3 IMPACT ON DESIGN BASIS DOCUMENTS

This calculation impacts no design basis documents.

8.4 IMPACT ON OTHER CALCULATIONS

1. RNP-I/INST-1120, Uncertainty of Manual Feed Flow Calorimetric Calculation Per OST-012
2. RNP-I/INST-1125, ERFIS Feed Flow Automatic Calorimetric Uncertainty Calculation
3. RNP-I/INST-1121, Uncertainty of ERFIS Feed Flow Calorimetric Calculation
4. RNP-I/INST-1040, Steam Flow Loop Uncertainty and Scaling Calculation

8.5 IMPACT ON PLANT PROCEDURES

This calculation impacts the following procedures:

1. LP-351, Steam Generator #1 Level (F.W. Flow) Channel 476
2. LP-352, Steam Generator #2 Level (F.W. Flow) Channel 486
3. LP-353, Steam Generator #3 Level (F.W. Flow) Channel 496
4. LP-354, Steam Generator #1 Level (F.W. Flow) Channel 477
5. LP-355, Steam Generator #2 Level (F.W. Flow) Channel 487
6. LP-356, Steam Generator #3 Level (F.W. Flow) Channel 497
7. MMM-006, Appendix B-4 Calibration Data Sheets
8. MST-014, Steam Generator Pressure Protection Channel Testing
9. PIC-609, Hagan Analog Computer
10. PIC-844, Yokogawa Recorders

9.0 SCALING CALCULATIONS

9.1 FLOW TRANSMITTER (FT-476, 477, 486, 487, 496 AND 496)

Per Reference 4.7.8, the following equation is used to compute the differential pressure across a nozzle venturi flow element:

$$m = 358.93\left(\frac{C\,Y\,d^2\,F_a}{\sqrt{1-\beta^4}}\right)\sqrt{\rho\,\Delta p}$$

where,

- m = mass flow rate (lbm / hr)
- C = discharge coefficient (unit less)
- Y = expansion factor (1 for water)
- d = bore diameter (in)
- F_a = thermal expansion factor (unit less)
- D = pipe diameter (in)
- β = beta ratio (unit less ratio d / D)
- ρ = fluid density (lbm / ft^3)
- ΔP = differential pressure (inwc)

The differential pressure associated with a given mass flow rate is obtained by solving the flow equation given above for ΔP. Therefore,

$$\Delta P = \frac{\left(\dfrac{m\sqrt{1-\beta^4}}{358.93(C)(Y)(d^2)(F_a)}\right)^2}{\rho}$$

All parameters are obtained from Reference 4.7.7. The differential pressure(s) developed across each flow element at calibration conditions are as follows:

<u>Flow Element 80255-1 Tap Set 1</u>

$m = 4 \times 10^6$ lbm / hr
$D = 13.9$ in
$d = 9.029$ in
$\beta = d / D$
$C = 0.9893$
$Fa = 1.007$
$Y = 1$
$\rho = 52.042675$ (855 psia, @ 441.5°F)

$\Delta P = 297.39$ inwc

<u>Flow Element 80255-1 Tap Set 2</u>

$m = 4 \times 10^6$ lbm / hr
$D = 13.9$ in
$d = 9.029$ in
$\beta = d / D$
$C = 0.9914$
$Fa = 1.007$
$Y = 1$
$\rho = 52.042675$ (855 psia, @ 441.5°F)

$\Delta P = 296.13$ inwc

Flow Element 80255-2 Tap Set 1

$m = 4 \times 10^6$ lbm / hr
$D = 13.935$ in
$d = 9.039$ in
$\beta = d / D$
$C = 0.9861$
$Fa = 1.007$
$Y = 1$
$\rho = 52.042675$ (855 psia, @ 441.5°F)

$\Delta P = 298.36$ inwc

Flow Element 80255-2 Tap Set 2

$m = 4 \times 10^6$ lbm / hr
$D = 13.935$ in
$d = 9.039$ in
$\beta = d / D$
$C = 0.9862$
$Fa = 1.007$
$Y = 1$
$\rho = 52.042675$ (855 psia, @ 441.5°F)

$\Delta P = 298.30$ inwc

Flow Element 80255-3 Tap Set 1

$m = 4x10^6$ lbm / hr
$D = 13.93$ in
$d = 9.026$ in
$\beta = d / D$
$C = 0.9919$
$Fa = 1.007$
$Y = 1$
$\rho = 52.042675$ (855 psia, @ 441.5°F)

$\Delta P = 296.86$ inwc

Flow Element 80255-3 Tap Set 2

$m = 4x10^6$ lbm / hr
$D = 13.93$ in
$d = 9.026$ in
$\beta = d / D$
$C = 0.9910$
$Fa = 1.007$
$Y = 1$
$\rho = 52.042675$ (855 psia, @ 441.5°F)

$\Delta P = 297.40$ inwc

The average differential pressure for all flow elements / tap sets is 297.41 inwc. For convenience, the transmitters are calibrated from 0 to 300 inwc.

Per Reference 4.7.4, FT-476, 486, 496 are Rosemount model 1151DP5 differential pressure transmitters. Per Reference 4.7.4, FT-477 and 487 are Rosemount model 1153DA5 differential pressure transmitters. Per Reference 4.7.4, FT-497 is a Rosemount model 1153HA5 differential pressure transmitter. Per Reference 4.4.3, each range code 5 transmitter may be calibrated to a span within the range of 0-125 to 0-750 inwc.

FT-476, 486 and 496

Per Reference 4.4.3, a static pressure span effect of 0.81% of input per 1000 psi is specified for a Rosemount 1151DP5 transmitter. The static pressure correction is performed for a nominal feedwater pressure of 840 psig. This effect is calibrated out by adjusting the calibrated range of the transmitter as follows:

$$0.81\% \text{ of input}\left(\frac{840\text{ psi}}{1000\text{ psi}}\right) = 0.680\% \text{ of input}$$

For 100 percent span,

0.680% (300 inwc / 100%) = 2.04 inwc
2.04 inwc (100% Span / 300 inwc) = 0.68% Span
0.68% Span (16 mA / 100% Span) = 0.109 mA
20.000 mA + 0.109 mA = 20.109 mA
20.109 mA (250 Ω) = 5.027 Vdc

Therefore, the transmitters are calibrated from 1.000 Vdc (0 inwc) to 5.027 Vdc (300 inwc).

The following equation is used to compute the required transmitter output for a given differential pressure input:

$$E_O = \left(\frac{4.027\text{ Vdc}}{300\text{ inwc}}\right)\Delta P\text{ inwc} + 1.000\text{ Vdc}$$

Per Section 6.8.9 of this calculation, the As Found Tolerance (AFT) of the transmitter is ± 1.20% Span. Per Section 6.8.10 of this calculation, the As Left Tolerance (ALT) of the transmitter is ± 0.50% Span. The AFT and ALT are converted to voltage units with the following equations:

$$AFT(Vdc) = \pm 4\ Vdc\left(\frac{AFT(\%\,Span)}{100}\right) = \pm 4\ Vdc\left(\frac{1.20\%\,Span}{100}\right) = \pm 0.048\ Vdc$$

$$ALT(Vdc) = \pm 4\ Vdc\left(\frac{ALT(\%\,Span)}{100}\right) = \pm 4\ Vdc\left(\frac{0.50\%\,Span}{100}\right) = \pm 0.020\ Vdc$$

The calibration table for the transmitter is as follows:

Required Input (inwc)	Desired Output (Vdc)	As Found Tolerance (Vdc)	As Left Tolerance (Vdc)
0	1.000	0.952 to 1.048	0.980 to 1.020
75	2.007	1.959 to 2.055	1.987 to 2.027
150	3.014	2.966 to 3.062	2.994 to 3.034
225	4.020	3.972 to 4.068	4.000 to 4.040
300	5.027	4.979 to 5.075	5.007 to 5.047

Transmitter Calibration Table (FT-476, 486, & 496)

FT-477, 487, and 497

Per Reference 4.4.3, a static pressure span effect of 1.00% of input per 1000 psi is specified for the Rosemount 1153DA5 and 1153HA5 transmitter. The static pressure correction is performed for a nominal feedwater pressure of 840 psig. This effect is calibrated out by adjusting the calibrated range of the transmitter as follows:

$$1.00\% \text{ of input}\left(\frac{840\text{ psi}}{1000\text{ psi}}\right) = 0.840\% \text{ of input}$$

For 100 percent span,

0.840% (300 inwc / 100%) = 2.52 inwc
2.52 inwc (100% Span / 300 inwc) = 0.84% Span
0.84% Span (16 mA / 100% Span) = 0.134 mA
20.000 mA + 0.134 mA = 20.134 mA
20.134 mA (250 Ω) = 5.034 Vdc

Therefore, the transmitters are calibrated from 1.000 Vdc (0 inwc) to 5.034 Vdc (300 inwc).

The following equation is used to compute the required transmitter output for a given differential pressure input:

$$Eo = \left(\frac{4.034\text{ Vdc}}{300\text{ inwc}}\right)\Delta P\text{ inwc} + 1.000\text{ Vdc}$$

Per Section 6.6.9 and 6.7.9 of this calculation, the As Found Tolerance (AFT) of the transmitter is ± 0.87% Span. Per Section 6.6.10 and 6.7.10 of this calculation, the As Left Tolerance (ALT) of the transmitter is ± 0.50% Span. The AFT and ALT are converted to voltage units with the following equations:

$$\text{AFT(Vdc)} = \pm 4\ \text{Vdc}\left(\frac{\text{AFT(\% Span)}}{100}\right) = \pm 4\ \text{Vdc}\left(\frac{0.87\%\ \text{Span}}{100}\right) = \pm 0.035\ \text{Vdc}$$

$$\text{ALT(Vdc)} = \pm 4\ \text{Vdc}\left(\frac{\text{ALT(\% Span)}}{100}\right) = \pm 4\ \text{Vdc}\left(\frac{0.50\%\ \text{Span}}{100}\right) = \pm 0.020\ \text{Vdc}$$

The calibration table for the transmitter is as follows:

Required Input (inwc)	Desired Output (Vdc)	As Found Tolerance (Vdc)	As Left Tolerance (Vdc)
0	1.000	0.965 to 1.035	0.980 to 1.020
75	2.009	1.974 to 2.044	1.989 to 2.029
150	3.017	2.982 to 3.052	2.997 to 3.037
225	4.026	3.991 to 4.061	4.006 to 4.046
300	5.034	4.999 to 5.069	5.014 to 5.054

Transmitter Calibration Table (FT-477, 487, & 497)

9.2 ISOLATOR MODULE (FM-476A, 476B, 477A, 477B, 486A, 486B, 487A, 487B, 496A, 496B, 497A, AND 497B)

The isolator transfer function is as follows:

$$E_O = E_I$$

Per Section 6.10.8 of this calculation, the As Found Tolerance (AFT) of the isolator is ± 1.20% Span. Per Section 6.10.9 of this calculation, the As Left Tolerance (ALT) of the isolator is ± 0.50% Span. The AFT and ALT are converted to voltage units with the following equations:

$$\text{AFT(Vdc)} = \pm 4\ \text{Vdc}\left(\frac{\text{AFT(\% Span)}}{100}\right) = \pm 4\ \text{Vdc}\left(\frac{1.20\%\ \text{Span}}{100}\right) = \pm 0.048\ \text{Vdc}$$

$$\text{ALT(Vdc)} = \pm 4\ \text{Vdc}\left(\frac{\text{ALT(\% Span)}}{100}\right) = \pm 4\ \text{Vdc}\left(\frac{0.50\%\ \text{Span}}{100}\right) = \pm 0.020\ \text{Vdc}$$

The calibration table for the isolator is as follows:

Required Input (Vdc)	Desired Output (Vdc)	As Found Tolerance (Vdc)	As Left Tolerance (Vdc)
1.000	1.000	0.952 to 1.048	0.980 to 1.020
2.000	2.000	1.952 to 2.048	1.980 to 2.020
3.000	3.000	2.952 to 3.048	2.980 to 3.020
4.000	4.000	3.952 to 4.048	3.980 to 4.020
5.000	5.000	4.952 to 5.048	4.980 to 5.020

Isolator Calibration Table

9.3 COMPARATOR MODULE (FC-478A, 478B, 488A, 488B, 498A, AND 498B)

Each comparator provides a Feedwater Flow / Steam Flow mismatch Reactor trip signal (switch 1), and a Feedwater Flow / Steam Flow mismatch alarm (switch 2). The following equation is used to compute the voltage representation of the comparator setpoints:

$$\text{Setpoint(Vdc)} = 4\ \text{Vdc}\left(\frac{\text{Setpoint(\%)}}{100\%}\right)$$

Per Reference 4.7.2, the Feedwater Flow / Steam Flow mismatch Reactor trip setpoint is 6.4×10^5 lbm / hr which equates to 16% Flow Span or 0.64 Vdc. The alarm setpoint is set to 12.5% Flow Span which equates to 0.50 Vdc.

Per Section 6.9.8 of this calculation, the As Found Tolerance (AFT) of the comparator is ± 1.16% Span. Per Section 6.9.9 of this calculation, the As Left Tolerance (ALT) of the comparator is ± 0.50% Span. The AFT and ALT are converted to voltage units with the following equations:

$$\text{AFT(Vdc)} = \pm 4\ \text{Vdc}\left(\frac{\text{AFT(\% Span)}}{100}\right) = \pm 4\ \text{Vdc}\left(\frac{1.16\%\ \text{Span}}{100}\right) = \pm 0.046\ \text{Vdc}$$

$$\text{ALT(Vdc)} = \pm 4\ \text{Vdc}\left(\frac{\text{ALT(\% Span)}}{100}\right) = \pm 4\ \text{Vdc}\left(\frac{0.50\%\ \text{Span}}{100}\right) = \pm 0.020\ \text{Vdc}$$

The following table provides calibration values for the comparators:

Setpoint (%)	Setpoint (Vdc)	As Found Tolerance (Vdc)	As Left Tolerance (Vdc)
16	0.640	0.594 to 0.686	0.620 to 0.660
12.5	0.500	0.454 to 0.546	0.480 to 0.520

Comparator Calibration Table

9.4 COMPARATOR MODULE (FC-478C, 478D, 488C, 488D, 498C, AND 498D)

Each comparator provides an alarm when Feedwater Flow is greater than Steam Flow. The following equation is used to compute the voltage representation of the comparator setpoints:

$$\text{Setpoint(Vdc)} = 4\ \text{Vdc}\left(\frac{\text{Setpoint(\%)}}{100\%}\right)$$

Per Reference 4.7.2, the alarm is set to 6.4×10^5 lbm / hr which equates to 16% Flow Span or 0.64 Vdc.

Per Section 6.9.8 of this calculation, the As Found Tolerance (AFT) of the comparator is ± 1.16% Span. Per Section 6.9.9 of this calculation, the As Left Tolerance (ALT) of the comparator is ± 0.50% Span. The AFT and ALT are converted to voltage units with the following equations:

$$\text{AFT(Vdc)} = \pm 4\ \text{Vdc}\left(\frac{\text{AFT(\% Span)}}{100}\right) = \pm 4\ \text{Vdc}\left(\frac{1.16\%\ \text{Span}}{100}\right) = \pm 0.046\ \text{Vdc}$$

$$\text{ALT(Vdc)} = \pm 4\ \text{Vdc}\left(\frac{\text{ALT(\% Span)}}{100}\right) = \pm 4\ \text{Vdc}\left(\frac{0.50\%\ \text{Span}}{100}\right) = \pm 0.020\ \text{Vdc}$$

The following table provides calibration values for the comparators:

Setpoint (%)	Setpoint (Vdc)	As Found Tolerance (Vdc)	As Left Tolerance (Vdc)
16	0.640	0.594 to 0.686	0.620 to 0.660

Comparator Calibration Table

9.5 SQUARE ROOT MODULE (FM-476, 477, 486, 487, 496, AND 497)

Each square root module has the following transfer function:

$$E_O = 2\ \text{Vdc}\sqrt{E_I - 1} + 1.000\ \text{Vdc}$$

Per Section 6.11.8 of this calculation, the As Found Tolerance (AFT) of the square root module is ± 0.67% Span. Per Section 6.11.9 of this calculation, the As Left Tolerance (ALT) of the square root module is ± 0.50% Span. The AFT and ALT are converted to voltage units with the following equations:

$$\text{AFT(Vdc)} = \pm 4\ \text{Vdc}\left(\frac{\text{AFT(\% Span)}}{100}\right) = \pm 4\ \text{Vdc}\left(\frac{0.67\%\ \text{Span}}{100}\right) = \pm 0.027\ \text{Vdc}$$

$$\text{ALT(Vdc)} = \pm 4\ \text{Vdc}\left(\frac{\text{ALT(\% Span)}}{100}\right) = \pm 4\ \text{Vdc}\left(\frac{0.50\%\ \text{Span}}{100}\right) = \pm 0.020\ \text{Vdc}$$

The calibration table for the square root module is as follows:

Required Input (Vdc)	Desired Output (Vdc)	As Found Tolerance (Vdc)	As Left Tolerance (Vdc)
1.000	1.000	0.973 to 1.027	0.980 to 1.020
1.040	1.400	1.373 to 1.427	1.380 to 1.420
1.250	2.000	1.973 to 2.027	1.980 to 2.020
2.000	3.000	2.973 to 3.027	2.980 to 3.020
3.250	4.000	3.973 to 4.027	3.980 to 4.020
5.000	5.000	4.973 to 5.027	4.980 to 5.020

Square Root Module Calibration Table

9.6 INDICATOR (FI-476, 477, 486, 487, 496, AND 497)

The indicators are scaled to provide an output of 0 to 4×10^6 lbm / hr for a 1 to 5 Vdc input. Therefore, the transfer function for the indicator is as follows:

$$Io = \left(\frac{4 \times 10^6 \text{ lbm / hr}}{4 \text{ Vdc}}\right)(E_I - 1.000 \text{ Vdc})$$

Per Section 6.12.9 of this calculation, the As Found Tolerance (AFT) of the indicator is ± 2.44% Span. Per Section 6.12.10 of this calculation, the As Left Tolerance (ALT) of the indicator is ± 2.00% Span. The AFT and ALT are converted to pressure units with the following equations:

$$AFT(Vdc) = \pm 4 \text{ Vdc}\left(\frac{AFT(\%\text{Span})}{100}\right) = \pm 4 \text{ Vdc}\left(\frac{2.44\%\text{ Span}}{100}\right) = \pm 0.098 \text{ Vdc}$$

$$ALT(Vdc) = \pm 4 \text{ Vdc}\left(\frac{ALT(\%\text{Span})}{100}\right) = \pm 4 \text{ Vdc}\left(\frac{2.00\%\text{ Span}}{100}\right) = \pm 0.080 \text{ Vdc}$$

The following table provides calibration values for the indicators:

Desired Input (Vdc)	Required Output (10^6 lbm / hr)	As Found Tolerance (Vdc)	As Left Tolerance (Vdc)
1.000	0	0.902 to 1.098	0.920 to 1.080
1.400	0.4	1.302 to 1.498	1.320 to 1.480
2.000	1	1.902 to 2.098	1.920 to 2.080
3.000	2	2.902 to 3.098	2.920 to 3.080
4.000	3	3.902 to 4.098	3.920 to 4.080
5.000	4	4.902 to 5.098	4.920 to 5.080

Indicator Calibration Table

9.7 RECORDER (FR-478, 488, AND 498)

The recorders are scaled to provide an output of 0 to 4×10^6 lbm / hr for a 1 to 5 Vdc input. Therefore, the transfer function for the recorder is as follows:

$$Ro = \left(\frac{4 \times 10^6 \text{ lbm / hr}}{4 \text{ Vdc}}\right)(E_1 - 1.000 \text{ Vdc})$$

Per Section 6.13.9 of this calculation, the As Found Tolerance (AFT) of the recorder is ± 0.59% Span. Per Section 6.13.10 of this calculation, the As Left Tolerance (ALT) of the recorder is ± 0.50% Span. The AFT and ALT are converted to pressure units with the following equations:

$$AFT(Vdc) = \pm 4 \text{ Vdc}\left(\frac{AFT(\%\,Span)}{100}\right) = \pm 4 \text{ Vdc}\left(\frac{0.59\%\,Span}{100}\right) = \pm 0.024 \text{ Vdc}$$

$$ALT(Vdc) = \pm 4 \text{ Vdc}\left(\frac{ALT(\%\,Span)}{100}\right) = \pm 4 \text{ Vdc}\left(\frac{0.50\%\,Span}{100}\right) = \pm 0.020 \text{ Vdc}$$

The following table provides calibration values for the recorders:

Desired Input (Vdc)	Required Output (10^6 lbm / hr)	As Found Tolerance (Vdc)	As Left Tolerance (Vdc)
1.000	0.00	0.976 to 1.024	0.980 to 1.020
1.400	0.40	1.376 to 1.424	1.380 to 1.420
2.000	1.00	1.976 to 2.024	1.980 to 2.020
3.000	2.00	2.976 to 3.024	2.980 to 3.020
4.000	3.00	3.976 to 4.024	3.980 to 4.020
5.000	4.00	4.976 to 5.024	4.980 to 5.020

Recorder Calibration Table

ATTACHMENT A
CALCULATION MATRIX REFERENCE TABLE

Calculation No. RNP-I/INST-1041
Page 1 of 2
Revision No. 3

TYPE OF DOCUMENT	DOCUMENT NUMBER	DOCUMENT TITLE
Calculations	RNP-E-1.005	120Vac Instrument Bus Voltage
Calculations	RNP-I/INST-1040	Main Steam Flow Accuracy and Scaling Calculation
Calculations	RNP-M/MECH-1651	Containment Analysis Inputs
Calculations	RNP-I/INST-1120	Uncertainty Of Manual Feed Flow Calorimetric Calculation Per OST-12
Calculations	RNP-I/INST-1125	ERFIS Feed Flow Automatic Calorimetric Uncertainty Calculation
Calculations	RNP-M/MECH-1616	Calculation For The Continuous Calorimetric
Calculation	RNP-I/INST-1121	Uncertainty of ERFIS Feed Flow Calorimetric Calculation
Calculations	RNP-M/MECH-1741	32-5015594-00 Appendix K Power Uprate Operating Conditions
Drawing	5379-03494	Hagan Wiring Diagram
Drawing	5379-03498	Hagan Wiring Diagram
Drawing	5379-03499	Hagan Wiring Diagram
Drawing	HBR2-11135	RTGB Panel C - Annunciator Section, Sheet 2
Drawing	HBR2-11135	RTGB Panel C - Vertical Section, Sheet 3
Other Documents	727-702-25	Feedwater System Instrumentation Flow Westinghouse Manual Number W-1003
Other Documents	728-012-10	Vendor Manual Rosemount
Other Documents	728-399-88	Auxiliary Indicating Meters Bulletin Model 2500 2520
Other Documents	728-589-13	Vendor Manual Hagan
Other Documents	MMM-006	Calibration Program
Other Documents	R82-226/01	DBD For Control Room Habitability Modifications 993 & 994
Other Documents	RNP-F/NFSA-0045	RNP Cycle 21 Plant Parameters Document
Other Documents	Technical Specifications	Section 3.3
Other Documents	UFSAR	Section 15, Safety Analysis
Other Documents	WNEP-8372	Model 44F Steam Generator Thermal and Hydraulic Design Data Report
Procedures	EGR-NGGC-0153	Engineering Instrument Setpoints
Procedures	LP-351	Steam Generator #1 Level (Feedwater Flow) Channel 476
Procedures	LP-352	Steam Generator #2 Level (Feedwater Flow) Channel 486
Procedures	LP-353	Steam Generator #3 Level (Feedwater Flow) Channel 496
Procedures	LP-354	Steam Generator #1 Level (Feedwater Flow) Channel 477

ATTACHMENT A
CALCULATION MATRIX REFERENCE TABLE

Calculation No. BNP-I/INST-1041
Page 2 of 2
Revision No. 3

TYPE OF DOCUMENT	DOCUMENT NUMBER	DOCUMENT TITLE
Procedures	LP-355	Steam Generator #2 Level (Feedwater Flow) Channel 487
Procedures	LP-356	Steam Generator #3 Level (Feedwater Flow) Channel 497
Procedures	TMM-026	List Of Regulatory Guide 1.97 Components
Procedures	MMM-006 Appendix B-4	Calibration Data Sheets
Procedures	PIC-844	Yokogawa Recorders
Other Documents	DBD/R87038/SD06	DBD Reactor Protection and Safeguards System
Drawings	5379-03485	Hagan Wiring Diagram
Drawings	5379-03486	Hagan Wiring Diagrams
Drawings	5379-03487	Hagan Wiring Diagrams

ATTACHMENT B
COMPARATOR DRIFT

Calculation No. BNP-I/INST-1041
Page 1 of 1
Revision No. 3

CALIBRATION DATA SHEET REVIEW SUMMARY

HAGAN MODEL 118 SINGLE COMPARATOR							
TC-141		LC-949		PC-143A		TC-143	
Cal. Dt.	Devia.	Cal. Dt.	Devia.	Cal. Dt.	Devia.	Cal. Dt.	Devia.
7/14/84		9/26/84		5/29/84			
	.001	9/25/85	.001		.000	6/26/85	
6/04/86		9/24/86	.001	2/23/86		2/02/86	.008
5/15/87	.001	9/28/87	.002	4/30/87	.004	1/27/87	.001
6/13/88	.003	9/30/88	.002	12/29/88	.009	2/3/88	.003
11/20/89	.003		.001		.009	7/4/89	.004
		2/26/90		9/22/90			

HAGAN MODEL 118 DUAL COMPARATOR								
	LC-106A		LC-106B		LC-108A		LC-108B	
Cal.Dt.	Devia.	Devia.	Devia.	Devia.	Devia.	Devia.	Devia.	Devia.
6/14/84	.000	.000	.001	.004	.000	.000	.000	.000
4/01/85	.001	.000	.001	.001	.001	.000	N/A	N/A
4/18/86	.001	.001	.001	.000	.001	.000	N/A	N/A
3/03/87	.001	.003	.001	.001	.000	.001	N/A	N/A
4/06/88	.000	.001	.002	.000	.002	.001	N/A	N/A
4/04/89	.000	.000	*	*	*	*	.003	.003
4/04/90								

* Instrument Malfunction
N/A Not Available

Maximum deviation noted between the as-found and as-left values recorded on the available calibration data sheets was .009 vdc.

This value is approximately equal to 0.25%.

ATTACHMENT C
INTERNATIONAL INSTRUMENTS INDICATOR DATA

PRIME TECHNOLOGY

operating companies
General Resistance
Instrumental Instruments
Transducers & Systems
Shunks Meters
E.I.E.S.

PRIME TECHNOLOGY, INC. • Twin Lakes Road • P.O. Box 185 • North Branford, CT 06471

Tel (203) 481-5721
TWX: 710-453-3082
FAX: (203) 481-8937

June 24, 1991

CAROLINA POWER & LIGHT
P.O. Box 1551
Raleigh, NC 27602-1551

Attn: Robert Mann OHS 6th Floor

Dear Robert,

Per our conversation the drift and T.C. for International Instruments model 2520 are 1% of span per year and .1% of span per degree C respectively. The accuracy following a seismic event are per Mil Standards for shock and vibration and are quoted as 5% of span. Understand that the assumption is made that the seismic event reflects both shock and vibration.

Should you have any further information, please do not hesitate to contact me.

Best Regards,

James L. Jamieson
Executive Vice President

cc: Keith Macdowall

ATTACHMENT D
ROSEMOUNT DRIFT

Calculation No. BNP-I/INST-1041
Page 1 of 1
Revision No. 3

ROSEMOUNT

Rosemount Inc.
12001 Technology Drive
Eden Prairie, MN 55344
Tel (612) 941-5560
Telex 4310012
Fax (612) 828-3088

September 20, 1990

Entergy Operations
Grand Gulf Nuclear Plant
ESC Building
P.O. Box 429
Port Gibson, MS 39150

Attention: Bob McCain

Dear Mr. McCain:

Rosemount has developed a new drift specification for the Model 1152, 1153 and 1154 pressure transmitters. The specification is ±.2% URL over a 30 month period.

In addition, all normal performance specs (i.e. accuracy) can be considered 3 sigma specs. The nuclear specs such as LOCA/HELB, radiation, and seismic were developed based on type testing. Due to the small sample size of test units, it is difficult to apply statistical methodology to these type of specs.

If you have any further questions please feel free to call me at (612) 828-3100.

Sincerely,

Neil P. Lien
Marketing Engineer

NPL:lbc

Enc: PDS 2302, 2388, 2514, 2235
Report D8600063

c: Les Callender #2

ATTACHMENT 2
Sheet 1 of 1
Record of Lead Review

Design: **Calculation RNP-I/INST-1041** **Revision:** **3**

The signature below of the Lead Reviewer records that:
- the review indicated below has been performed by the Lead Reviewer;
- appropriate reviews were performed and errors/deficiencies (for all reviews performed) have been resolved and these records are included in the design package;
- the review was performed in accordance with EGR-NGGC-0003.

☐ **Design Verification Review** ☐ **Engineering Review** ☒ **Owner's Review**
- ☐ Design Review
- ☐ Alternate Calculation
- ☐ Qualification Testing

☐ **Special Engineering Review**

☐ YES ☒ N/A **Other Records are attached.**

Tom Hokemeyer	Tom Holmes	CES Elec/I&C	9/5/02
Lead Reviewer	**(print/sign)**	**Discipline**	**Date**

Item No.	Deficiency	Resolution
1	Section 5.15 - Revise discussion to define the pressure to be used for transmitter static pressure corrections in units of psig, rather than psia. Due to previous conservatism employed, the selected numeric value of 1010 may still be used (thereby avoiding the need to revise subsequent numeric calculations)	Done
2	Section 7.3 (two places) – Revise example for Flow Rate representation to utilize an actual sample flow value used within this calc.	Done
3	Section 7.3 – Delete paragraph starting "The steam flow bias and random components are computed at slightly different flow rates..." The previous revs of this calc and RNP-I/INST-1040 synchronized the evaluated flow rates.	Done

FORM EGR-NGGC-0003-2-5
This form is a QA Record when completed and included with a completed design package. Owner's Reviews may be processed as stand alone QA records when Owner's Review is completed.