SYSTEM# 2005
CALC. SUB-TYPE IE
PRIORITY CODE 0
QUALITY CLASS NA

NUCLEAR GENERATION GROUP

CALCULATION # RNP-I/INST-1128
(Calculation #)

RCS Flow Instrument Uncertainty and Scaling Calculation
(Title including structures, systems, components)

☐ BNP UNIT 2

☐ CR3 ☐ HNP ☒ RNP ☐ NES ☐ ALL

APPROVAL

REV	PREPARED BY	REVIEWED BY	SUPERVISOR
2	Signature Signature on File	Signature Signature on File	Signature Signature on File
	Name	Name	Name
	Date	Date	Date
3	Signature Signature on File	Signature Signature on File	Signature Signature on File
	Name	Name	Name
	Date	Date	Date
4	Signature Signature on File	Signature Signature on File	Signature Signature on File
	Date	Date	Date
5	Signature W. Robert Smith	Signature Alex Saphos	Signature Jerry Sadowskas
	W. [illegible]	[illegible]	Jerry Sadowskas
	Date 6/28/04	Date 6/28/04	Date 7/1/04

(For Vendor Calculations)

Vendor Hurst Technologies Vendor Document No. RNP-I/INST-1128

Owner's Review By [illegible] Date 06/30/04

LIST OF EFFECTIVE PAGES

PAGE	REV	PAGE	REV	PAGE	REV
1	5	34	5	67	5
2	5	35	5	68	5
3	5	36	5	69	5
4	5	37	5	70	5
5	5	38	5	71	5
6	5	39	5		
7	5	40	5		
8	5	41	5		
9	5	42	5		
10	5	43	5		
11	5	44	5		
12	5	45	5		
13	5	46	5		
14	5	47	5		
15	5	48	5		
16	5	49	5		
17	5	50	5		
18	5	51	5		
19	5	52	5		
20	5	53	5		
21	5	54	5		
22	5	55	5		
23	5	56	5		
24	5	57	5		
25	5	58	5		
26	5	59	5		
27	5	60	5		
28	5	61	5		
29	5	62	5		
30	5	63	5		
31	5	64	5		
32	5	65	5		
33	5	66	5		

ATTACHMENTS

Number	Rev	Number of Pages
A	5	1
B	5	1
C	5	1
D	5	1
E	5	1

AMENDMENTS

Letter	Rev	Number of Pages

Table of Contents

SEC DESCRIPTION PAGE

LIST OF EFFECTIVE PAGES 2
REVISION HISTORY 6
1.0 OBJECTIVE 7
2.0 FUNCTIONAL DESCRIPTION 8
2.1 NORMAL FUNCTION 8
2.2 ACCIDENT MITIGATING FUNCTION 8
2.3 POST ACCIDENT MONITORING FUNCTION 8
2.4 POST SEISMIC FUNCTION 8
3.0 LOOP DIAGRAM 9
4.0 REFERENCES 11
4.1 DRAWINGS 11
4.2 CALCULATIONS 11
4.3 REGULATORY DOCUMENTS 11
4.4 TECHNICAL MANUALS 12
4.5 CALIBRATION AND MAINTENANCE PROCEDURES 12
4.6 PROCEDURES 12
4.7 OTHER REFERENCES 13
5.0 INPUTS AND ASSUMPTIONS 14
6.0 CALCULATION OF UNCERTAINTY CONTRIBUTORS 21
6.1 ACCIDENT EFFECTS (AE) 21
6.1.1 Accident Temperature Effect (ATE) 21
6.1.2 Accident Pressure Effect (APE) 21
6.1.3 Accident Radiation Effect (ARE) 21
6.2 SEISMIC EFFECT (SE) 22
6.3 INSULATION RESISTANCE ERROR (IR) 22
6.4 PROCESS MEASUREMENT ERROR (PME) 23
6.4.1 Process Measurement Error 23
6.4.2 Flow Calorimetric Uncertainties 23
6.4.3 Process Density Effects 24
6.5 PRIMARY ELEMENT ERROR (PE) 26
6.6 TRANSMITTER (FT-414, FT-415, FT-416, FT-424, FT-425, FT-426, FT-434, FT-435, AND FT-436) 27
6.6.1 Transmitter's Unverified Attributes of Reference Accuracy (RA_{xmtr}) 27
6.6.2 Transmitter Calibration Tolerance (CAL_{xmtr}) 27
6.6.3 Transmitter Drift (DR_{xmtr}) 27
6.6.4 Transmitter M&TE Effect (MTE_{xmtr}) 28
6.6.5 Transmitter Temperature Effect (TE_{xmtr}) 28
6.6.6 Transmitter Static Pressure Effect (SPE_{xmtr}) 29
6.6.7 Transmitter Power Supply Effect (PSE_{xmtr}) 29
6.6.8 Transmitter Total Device Uncertainty (TDU_{xmtr}) 30
6.6.9 Transmitter As Found Tolerance (AFT_{xmtr}) 30
6.6.10 Transmitter As Left Tolerance (ALT_{xmtr}) 31
6.7 COMPARATOR MODULE 32
6.7.1 Comparator's Unverified Attributes of Reference Accuracy (RA_{comp}) 32

6.7.2 Comparator Calibration Tolerance (CAL_{comp}) 32
6.7.3 Comparator Drift (DR_{comp}) 32
6.7.4 Comparator M&TE Effect (MTE_{comp}) 33
6.7.5 Comparator Temperature Effect (TE_{comp}) 33
6.7.6 Comparator Power Supply Effect (PSE_{comp}) 33
6.7.7 Comparator Total Device Uncertainty (TDU_{comp}) 34
6.7.8 Comparator As Found Tolerance (AFT_{comp}) 34
6.7.9 Comparator As Left Tolerance (ALT_{comp}) 35
6.8 ISOLATOR MODULE 36
6.8.1 Isolator's Unverified Attributes of Reference Accuracy (RA_{isol}) 36
6.8.2 Isolator Calibration Tolerance (CAL_{isol}) 36
6.8.3 Isolator Drift (DR_{isol}) 36
6.8.4 Isolator M&TE Effect (MTE_{isol}) 37
6.8.5 Isolator Temperature Effect (TE_{isol}) 37
6.8.6 Isolator Power Supply Effect (PSE_{isol}) 38
6.8.7 Isolator Total Device Uncertainty (TDU_{isol}) 38
6.8.8 Isolator As Found Tolerance (AFT_{isol}) 38
6.8.9 Isolator As Left Tolerance (ALT_{isol}) 39
6.9 INDICATOR 40
6.9.1 Indicator's Unverified Attributes of Reference Accuracy (RA_{ind}) 40
6.9.2 Indicator Calibration Tolerance (CAL_{ind}) 40
6.9.3 Indicator Drift (DR_{ind}) 41
6.9.4 Indicator M&TE Effect (MTE_{ind}) 41
6.9.5 Indicator Temperature Effect (TE_{ind}) 41
6.9.6 Indicator Power Supply Effect (PSE_{ind}) 42
6.9.7 Indicator Readability (RD_{ind}) 42
6.9.8 Indicator Total Device Uncertainty (TDU_{ind}) 42
6.9.9 Indicator As Found Tolerance (AFT_{ind}) 43
6.9.10 Indicator As Left Tolerance (ALT_{ind}) 44
7.0 TOTAL LOOP UNCERTAINTY (TLU) 45
7.1 TOTAL LOOP UNCERTAINTY - PLANT NORMAL 45
7.1.1 Total Loop Uncertainty - Indicator FI-414, 415, 416, 424, 425, 426, 434, 435, AND 436 45
7.1.2 Total Loop Uncertainty - Input to ERFIS 46
7.2 TOTAL LOOP UNCERTAINTY - ACCIDENT 47
7.3 TOTAL LOOP UNCERTAINTY - POST SEISMIC 47
7.3.1 Total Loop Uncertainty - Low RCS Flow Reactor Trip 47
7.4 LOOP AS FOUND TOLERANCE 48
7.4.1 Loop As Found Tolerance - Indicator FI-414, 415, 416, 424, 425, 426, 434, 435, AND 436 48
7.4.2 Loop As Found Tolerance - Input to ERFIS 48
7.4.3 Loop As Found Tolerance - Comparators 49
7.5 GROUP AS FOUND TOLERANCE 49
7.5.1 Group As Found Tolerance - Indicator FI-414, 415, 416, 424, 425, 426, 434, 435, AND 436 49
7.5.2 Group As Found Tolerance - Input to ERFIS 50
7.5.3 Group As Found Tolerance - Comparators 50
8.0 DISCUSSION OF RESULTS 51
8.1 IMPACT ON IMPROVED TECHNICAL SPECIFICATIONS 53
8.2 IMPACT ON UFSAR 53

8.3 IMPACT ON DESIGN BASIS DOCUMENTS 53
8.4 IMPACT ON OTHER CALCULATIONS 53
8.5 IMPACT ON PLANT PROCEDURES 53
9.0 SCALING CALCULATIONS 54
9.1 FLOW TRANSMITTER (FT-414, 415, 416, 424, 425, 426, 434, 435, AND 436) 54
9.2 ISOLATOR MODULE (FM-414, 415, 416, 424, 425, 426, 434, 435, AND 436) 64
9.3 COMPARATOR MODULE (FC-474, 475, 476, 484, 485, 486, 494, 495, AND 496) 65
9.4 INDICATOR (FI-414, 415, 416, 424, 425, 426, 434, 435, AND 436) 66

LIST OF ATTACHMENTS **PAGES**

Attachment A - Calculation Matrix 1
Attachment B - Comparator Drift 1
Attachment C - Rosemount Drift 1
Attachment D - International Instruments Indicator Data 1
Attachment E - Elbow Tap Flow Coefficient Uncertainty 1

REVISION HISTORY

REVISION	DESCRIPTION OF CHANGE
2	Revised to validate the Technical Specification Low Flow Reactor Trip setpoint and Allowable Value. The format of the calculation was also revised to follow the calculation methodology presented in EGR-NGGC-0153.
3	Revised to add informative note describing a potential source of available margin due to reduced secondary calorimetric uncertainty. Revised plant operating parameters; cold leg temperature revised to 547.6°F (from 546°F), RCS system pressure to 2250 psia (from 2235 psia). Several additions have been made to clarify the information presented in this calculation (ex. New Section 5.17, notes added to Sections 6.6 and 6.7, and others).
4	This revision includes the change of transmitter type due to Engineering Change 54509. This EC changed the transmitter type from a Rosemount model 1152 to a Rosemount model 1154 for FT-416, 425, 426, 434, and 435. This revision also changed the Allowable Value determination to evaluate the Technical Specification Allowable Value against the Technical Specification Setpoint (Section 8.0). Revised comparator AFT to provide additional conservatism for the determination of AV. Corrected numeric error in the computation of the Low Flow trip TLU. Miscellaneous editorial corrections.
5	Editorial corrections. Revised Section 9.3 heading to reflect proper comparator modules. Removed extraneous text out of the AFT and ALT equations in the Scaling Calculations section (Section 9.0). Also corrected the computed As Found Tolerance values for the comparators in Section 9.3.

1.0 OBJECTIVE

This calculation computes the loop uncertainties associated with the indication and trip functions provided by the Reactor Coolant System Flow instrumentation loops. The loops addressed in this calculation also provide input to the Emergency Response Facility Information System (ERFIS). Uncertainties at the input to ERFIS are calculated. Uncertainties are calculated for normal and seismic conditions. This calculation develops the Reactor Protection System (RPS) setpoint associated with each instrument loop. This calculation also calculates the Allowable Value for the RPS setpoint addressed in this calculation.

The instrument loops containing the following components are addressed in this calculation:

FT-414	FT-415	FT-416
FQ-414	FQ-415	FQ-416
FC-414	FC-415	FC-416
FM-414	FM-415	FM-416
FI-414	FI-415	FI-416
FC-414/R	FC-415/R	FC-416/R
FM-414/R	FM-415/R	FM-416/R
F-414	F-415	F-416
FT-424	FT-425	FT-426
FQ-424	FQ-425	FQ-426
FC-424	FC-425	FC-426
FM-424	FM-425	FM-426
FI-424	FI-425	FI-426
FC-424/R	FC-425/R	FC-426/R
FM-424/R	FM-425/R	FM-426/R
F-424	F-425	F-426
FT-434	FT-435	FT-436
FQ-434	FQ-435	FQ-436
FC-434	FC-435	FC-436
FM-434	FM-435	FM-436
FI-434	FI-435	FI-436
FC-434/R	FC-435/R	FC-436/R
FM-434/R	FM-435/R	FM-436/R
F-434	F-435	F-436

2.0 FUNCTIONAL DESCRIPTION

The main components of the Reactor Coolant System are the Reactor, Steam Generators, the Pressurizer, and the reactor coolant pumps. The reactor coolant pumps provide forced cooling for the reactor during normal operation. The instrument loops addressed in this calculation serve to monitor reactor coolant flow in each loop and provide the following protective function:

- Low Flow Reactor Trip

2.1 NORMAL FUNCTION

During normal operation, the instrument loops addressed in this calculation provide reactor coolant loop flow indication (FI-414, 415, 416, 424, 425, 426, 434, 435 and 436) and input to the Emergency Response Facility Information System (ERFIS).

2.2 ACCIDENT MITIGATING FUNCTION

The instrument loops addressed in this calculation provide a Reactor Trip on Low reactor coolant flow in any loop. This trip serves to protect against DNB following a loss of forced reactor coolant flow. A Reactor Trip occurs when two out of three flow signals fall below the Low Flow setpoint. Per Reference 4.7.1, this trip is credited in the Safety Analysis to protect against loss of forced coolant flow events.

2.3 POST ACCIDENT MONITORING FUNCTION

Per Reference 4.6.2, these instrument loops are Regulatory Guide 1.97 D3 instruments, which are used as backup and diagnostic instrumentation.

2.4 POST SEISMIC FUNCTION

These instruments are seismically qualified to ensure that safety / protection functions remain operable following a seismic event.

3.0 LOOP DIAGRAM

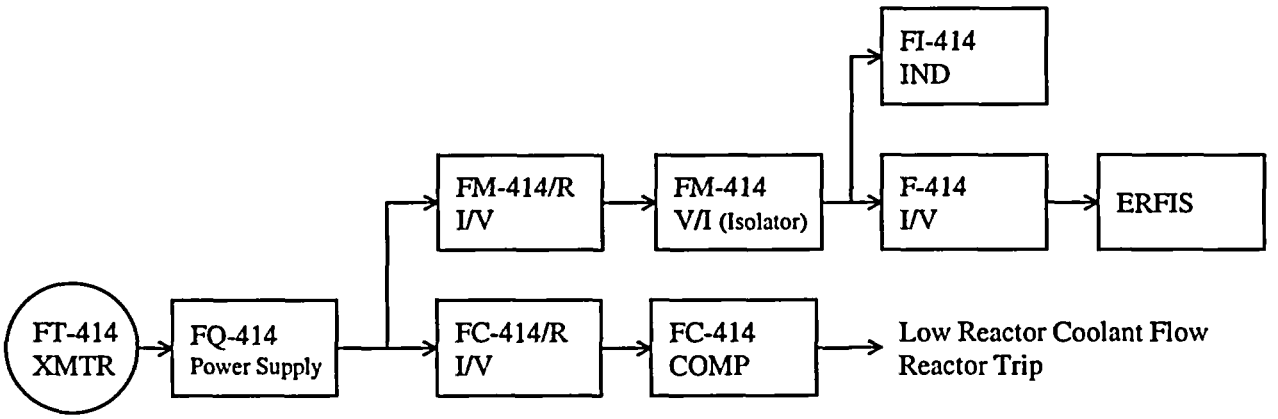

Note: Same configuration for loops F-415, 416, 424, 425, 426, 434, 435, and 436.

TAG NUMBER	FUNCTION	MAKE AND MODEL	LOCATION	REFERENCE
FT- 414, 415, 424, 436, 416, 425, 426, 434, 435	Transmitter	Rosemount 1154HP5	Containment	4.1.1-3, 4.7.4
FQ- 414, 415, 416 FQ- 424, 425, 426 FQ- 434, 435, 436	Power Supply	Hagan Optimac Model 137-121 Or NUS SPS 801	Hagan Rack	4.1.1-3, 4.7.4
FC-414/R, 415/R FC-416/R, 424/R FC-425/R, 426/R FC-434/R, 435/R FC-436/R	I/V	Hagan Model 3110554-000	Hagan Rack	4.1.1-3, 4.7.4
FM-414/R, 415/R FM-416/R, 424/R FM-425/R, 426/R FM-434/R, 435/R FM-436/R	I/V	Hagan Model 3110554-000	Hagan Rack	4.1.1-3, 4.7.4
FM-414, 415, 416 FM-424, 425, 426 FM-434, 435, 436	V/I Isolator	Hagan Model 110 Or NUS OCA 800	Hagan Rack	4.1.1-3, 4.7.4
FC-414, 415, 416 FC-424, 425, 426 FC-434, 435, 436	Comparator	Hagan Model 118 Or NUS SAM 800	Hagan Rack	4.1.1-3, 4.7.4
FI-414, 415, 416 FI-424, 425, 426 FI-434, 435, 436	Indicator	International Instruments 2520	RTGB	4.1.1-3, 4.7.4

Instrument Identification

4.0 REFERENCES

4.1 DRAWINGS

4.1.1 5379-3524, Hagan Wiring Diagram, Revision 13
4.1.2 5379-3525, Hagan Wiring Diagram, Revision 15
4.1.3 5379-3526, Hagan Wiring Diagram, Revision 14
4.1.4 HBR2-11260, Zone Map For Environmental Parameters Reactor Building Elevation 228 ft, Sheet 5, Revision 2
4.1.5 HBR2-11133, RTGB Panel A - Left Vertical Section, Sheet 6, Revision 4

4.2 CALCULATIONS

4.2.1 RNP-E-1.005, 120 VAC Instrument Bus Voltage Evaluation, Revision 2
4.2.2 Deleted
4.2.3 RNP-M/MECH-1651, Containment Analysis Inputs, Revision 11
4.2.4 RNP-M/MECH-1741, 32-5015594-00, Appendix K, Power Upgrade Operating Conditions, Revision 0

4.3 REGULATORY DOCUMENTS

4.3.1 Regulatory Guide 1.97, Rev. 3, "Instrumentation for Light Water-Cooled Nuclear Power Plants to Assess Plant and Environs Conditions During and Following an Accident"

4.4 TECHNICAL MANUALS

4.4.1 728-589-13, Vendor Manual Hagan, Revision 23
4.4.2 728-399-88, Auxiliary Indicating Meters Bulletin Model 2500 2520, Revision 3
4.4.3 728-012-10, Vendor Manual Rosemount, Revision 27

4.5 CALIBRATION AND MAINTENANCE PROCEDURES

4.5.1 LP-060, Reactor Coolant Flow Channel 414, Revision 8
4.5.2 LP-061, Reactor Coolant Flow Channel 415, Revision 8
4.5.3 LP-062, Reactor Coolant Flow Channel 416, Revision 8
4.5.4 LP-063, Reactor Coolant Flow Channel 424, Revision 7
4.5.5 LP-064, Reactor Coolant Flow Channel 425, Revision 7
4.5.6 LP-065, Reactor Coolant Flow Channel 426, Revision 8
4.5.7 LP-066, Reactor Coolant Flow Channel 434, Revision 7
4.5.8 LP-067, Reactor Coolant Flow Channel 435, Revision 7
4.5.9 LP-068, Reactor Coolant Flow Channel 436, Revision 7

4.6 PROCEDURES

4.6.1 EGR-NGGC-0153, "Engineering Instrument Setpoints", Revision 10
4.6.2 TMM-026, "List of Regulatory Guide 1.97 Instruments", Revision 21
4.6.3 MMM-006, Calibration Program, Revision 23
4.6.4 MMM-006, Appendix B-3 Calibration Data Sheets, Revision 3
4.6.5 EST-047, Reactor Coolant Flow Test (18 months), Revision 20
4.6.6 OST-020, Shiftly Surveillances, Revision 21

4.7 OTHER REFERENCES

4.7.1 Updated Final Safety Analysis Report, Revision 15 (For information only)
4.7.2 Technical Specifications, Amendment 176 (For information only)
4.7.3 RNP-F/NFSA-0045, RNP Cycle 21 Reload Plant Parameter Document, Revision 2
4.7.4 EDB
4.7.5 ASME Steam Tables 6th edition
4.7.6 R82-226/01, DBD for Control Room Habitability Modifications 993&994, Revision 6
4.7.7 Operability Determination No. 95-022
4.7.8 ASME Fluid Meters Their Theory and Application, Sixth Edition, 1971
4.7.9 ESR 97-00195
4.7.10 WCAP-11889, "RTD Bypass Elimination Report"
4.7.11 EE 87-113
4.7.12 EE 90-073
4.7.13 EC 54509

5.0 INPUTS AND ASSUMPTIONS

5.1 The accuracy of a typical test resistor is on the order of ±0.01%. Therefore, the test resistors used during calibration are assumed to have a negligible impact on the overall uncertainty calculation.

5.2 Per Reference 4.7.6, the ambient temperature in the control room varies from 70°F to 77°F during operation. The calibration temperature for the indicator is assumed to be 60°F. Therefore, a change in temperature of 17°F (9.4°C) is used to compute the indicator temperature effect.

5.3 The Westinghouse 3110554-000 Computer Signal Conditioner is a high precision resistor. Based on the high accuracy of the resistor, the resistor has a negligible impact on the overall loop uncertainty computation.

5.4 Per Reference 4.7.6, the maximum temperature of the Hagan rack rooms is 82°F. Per Reference 4.6.1, the racks may experience an additional 10°F heat rise during operation. The ambient temperature at the time of calibration is assumed to be 50°F. Therefore, a change in temperature of 42°F is used to compute the temperature effect associated with rack components.

$$82°F + 10°F - 50°F = 42°F$$

5.5 Per Reference 4.6.1, reference accuracy typically includes the effects of linearity, hysteresis, and repeatability. The indicator reference accuracy given in Reference 4.4.2 is assumed to include the effects of linearity, hysteresis, and repeatability.

5.6 Per References 4.5.1 through 4.5.9, the I/V module is calibrated as part of a string. Per Reference 4.4.1, the I/V module is a resistor. Resistors typically experience negligible drift. Therefore, any resistor drift throughout the fuel cycle is negligible and is accounted for during the string calibration.

5.7 Per Reference 4.1.4, the minimum operating temperature for Containment is 88°F. Per Reference 4.2.3, the maximum Containment temperature is 130°F. The transmitters are not calibrated during normal plant operation. Therefore, the temperature at the time of calibration may be lower than 88°F. For conservatism, an assumed calibration temperature of 50°F is used to compute the transmitter temperature effect.

5.8 Per Reference 4.6.1, the normalized relationship between flow and differential pressure is given by the following equation:

$$FR = \sqrt{\Delta P}$$

The equation used to convert random uncertainties from % ΔP Span to % Flow Span is derived by taking the total derivative of the flow equation as follows:

$$dFR = \frac{\partial}{\partial \Delta P}\sqrt{\Delta P} = \frac{dp}{2\sqrt{\Delta P}} \Rightarrow dFR = \frac{dp}{2FR}$$

where,

dFR = flow uncertainty (% Flow Span)
dp = differential pressure uncertainty (% ΔP Span)
FR = actual flow rate (% Flow Span)

To obtain the equation used to convert random uncertainties from % Flow Span to % ΔP Span, the equation given above is solved for "dp".

$$* \, dp = 2(FR)(dFR)$$

* - Multiply by a factor of 100 to obtain % ΔP Span

5.9 During normal operation, RCS flow remains constant at approximately 100% Flow which equates to 83.33% Flow Span (100% Flow Span = 120% Flow). Therefore, this calculation considers flow rates from 40 to 100% Flow Span.

5.10 Per Reference 4.7.3, the analytical limit for the Low RCS Flow Reactor Trip setpoint is 87% of the Technical Specification minimum RCS flow requirement. These loops are scaled to provide an indication of 0 to 120% Flow. Per Reference 4.7.9, an analytical limit of 87% Flow Span is more conservative than 87% Flow. Therefore, the RCS Low Flow Reactor Trip setpoint is calculated based on an analytical limit of 87% Flow Span.

5.11 Per Reference 4.6.1, the normalized relationship between flow and differential pressure is given by the following equation:

$$FR = \sqrt{\Delta P}$$

The equation used to compute percent differential pressure span from a given percent flow span is obtained by solving the equation for ΔP. Therefore,

$$\Delta P = 100\%\ \Delta P\ \text{Span}\left(\frac{FR}{100\%\ \text{Flow Span}}\right)^2$$

where,

FR = Flow Rate

5.12 Per Reference 4.7.9, if all variables are treated as constants except density (ρ) and differential pressure (ΔP), the following equation is used to compute the theoretical flow through an elbow meter:

$$m = K\sqrt{\rho\,\Delta p}$$

where,

m = mass flow rate (lbm / hr)
K = Flow Coefficient
ρ = fluid density (lbm / ft^3)
ΔP = differential pressure (inwc)

For calibration conditions, the flow equation is as follows:

$$m_C = K\sqrt{\rho_C \, \Delta p_C}$$

For operating conditions, the flow equation is as follows:

$$m_N = K\sqrt{\rho_N \, \Delta p_N}$$

Assuming a constant mass flow rate for calibration and operating conditions, the following equation is written:

$$m_N = m_C$$

Therefore,

$$K\sqrt{\rho_N \, \Delta p_N} = K\sqrt{\rho_C \, \Delta p_C}$$

Solving for ΔP_N yields the following equation:

$$\Delta p_N = \left(\frac{\rho_C}{\rho_N}\right)\Delta p_C$$

The process measurement effect, expressed in terms of % ΔP Span, due to changes in RCS fluid density from those assumed for calibration is obtained with the following equation:

$$PME_{DENSITY}\ (\%\ \Delta P\ Span) = \left(\frac{\Delta p_N - \Delta p_C}{\Delta P\ Span}\right) 100\%\ \Delta P\ Span = \left(\frac{\frac{\rho_C}{\rho_N}\Delta p_C - \Delta p_C}{\Delta P\ Span}\right) 100\%\ \Delta P\ Span$$

Therefore,

$$PME_{DENSITY}\ (\%\ \Delta P\ Span) = \left(\frac{\left(\frac{\rho_C}{\rho_N} - 1\right)\Delta p_C}{\Delta P\ Span}\right) 100\%\ \Delta P\ Span$$

5.13 Per Reference 4.6.1, the normalized relationship between flow and differential pressure is given by the following equation:

$$FR = \sqrt{\Delta P}$$

The equation used to convert bias uncertainties from % ΔP Span to % Flow Span is derived using perturbation methods. The flow equation with uncertainties in the differential pressure and flow terms is,

$$FR + f = \sqrt{\Delta P + dp}$$

where,

FR = actual flow (% Flow Span)
f = flow uncertainty (% Flow Span)
ΔP = differential pressure (% ΔP Span)
dp = differential pressure uncertainty (% ΔP Span)

Taking the difference between the two equations given above yields the following,

$$FR + f - FR = \sqrt{\Delta P + dp} - \sqrt{\Delta P} \Rightarrow f = \sqrt{\Delta P + dp} - \sqrt{\Delta P}$$

The equation given above is simplified by using the normalized relationship between flow and differential pressure as follows,

$$*f = \sqrt{FR^2 + dp} - FR$$

* - Multiply by a factor of 100 to obtain % Flow Span

To obtain the equation used to convert from % Flow Span to % ΔP Span, the equation given above is solved for "dp". Therefore, the equation used to convert from % Flow Span to % ΔP Span is as follows,

$$*dp = (FR + f)^2 - FR^2$$

* - Multiply by a factor of 100 to obtain % ΔP Span

5.14 Per Reference 4.2.4 and Design Input 5.16, RCS cold leg temperature during normal operation is approximately 547.6°F at 2250 psia, which is in agreement with Robinson Dynamic Plant Data PLT View. Per Reference 4.7.10, the uncertainty associated with the RCS average temperature is ±4°F. For conservatism, RCS cold leg temperature is assumed to vary between 537.6°F and 557.6°F during normal operation. Therefore, per Reference 4.7.5, the following densities are used to compute the process measurement effect associated with density variations of the RCS cold leg fluid:

ρ_C = 47.01789 lbm / ft^3 (calibration, 547.6°F)
ρ_{MAX} = 47.64037 lbm / ft^3 (maximum, 537.6°F)
ρ_{MIN} = 46.36606 lbm / ft^3 (minimum, 557.6°F)

5.15 HBR2 replaced all RCS Flow Transmitters with Rosemount transmitters. After the new transmitters were installed, the differential pressure (ΔP) required to indicate 100% RCS Flow was determined for each of the 9 RCS Flow Transmitters. Based on discussions with station personnel and a review of Reference 4.7.7, the RCS Flow Transmitter 100% ΔP values were scaled to the process range of 0 to 120% RCS Flow, yielding ΔP values for 120% RCS Flow. These values were then documented in the scaling documents for their respective transmitters. Since the RCS flow transmitters have not been normalized to 100% flow since the initial scaling, it is assumed that the existing scaling documents (Reference 4.6.4) contain the correct span values for each of the 9 RCS Flow Transmitters. [Note that the calibration values in 4.6.4 have been rounded to the nearest inwc, so the actual transmitter 100% range value must be calculated using the input / output recorded in Reference 4.6.4.]

5.16 The RCS cold leg temperature is based on 0% tube plugging in the Steam Generators, which is the most conservative value.

5.17 The computations performed in this calculation are carried to several significant digits, but are presented rounded to two decimal places. Hand verification using the rounded values may result in slightly different results due to round off error.

6.0 CALCULATION OF UNCERTAINTY CONTRIBUTORS

6.1 ACCIDENT EFFECTS (AE)

Per Reference 4.6.2, the indication functions are required to provide backup indication following an accident. However, Category 3 loops are not required to be qualified for harsh environmental conditions. Therefore, accident effects are not computed for the indication functions.

Per Reference 4.7.1, the Low Flow Reactor Trip is credited in the safety analysis for terminating loss of forced coolant flow events. Per Reference 4.7.2, this trip serves to prevent violating the DNBR limit due to low flow in one or more loops. This trip is not credited to terminate any event which results in a harsh Containment environment. Therefore, accident effects are not included in the total loop uncertainties for this trip function. However, this function must be available following a seismic event. Therefore, seismic uncertainties are included in the total loop uncertainties for this function.

6.1.1 Accident Temperature Effect (ATE)

Per Section 6.1, accident effects are not analyzed for these loops.

6.1.2 Accident Pressure Effect (APE)

The transmitter in each loop is a differential pressure transmitter, and per Section 6.1, accident effects are not analyzed for these loops.

6.1.3 Accident Radiation Effect (ARE)

Per Section 6.1, accident effects are not analyzed for these loops.

6.2 SEISMIC EFFECT (SE)

Per Reference 4.7.4, the transmitters addressed in this calculation are Rosemount 1152HP5 and Rosemount 1154HP5. Per Reference 4.4.3, the seismic effect associated with a model 1152 transmitter is ±0.25% Upper Range Limit (URL), and the seismic effect associated with a model 1154 transmitter is ±0.50% URL. For conservatism, the seismic effect associated with the model 1154 transmitter is used in this calculation. Per Reference 4.4.3, the URL for both models is 750 inwc. Each loop has a different span. For conservatism, the minimum calibrated span of 385 inwc (Section 9.1) is used to calculate the transmitter seismic effect. Therefore,

$$SE_{xmtr} = \pm 0.50\%\ \text{URL}\left(\frac{750\ \text{inwc}}{385\ \text{inwc}}\right) = \pm 0.97\%\ \text{Span}$$

The indication functions provided by each loop are not required post seismic event. Therefore, the indication loop uncertainties do not include the transmitter seismic effect. The seismic uncertainties are included in the total loop uncertainties for the trip function only.

6.3 INSULATION RESISTANCE ERROR (IR)

Per Section 6.1, accident effects are not analyzed for these loops.

6.4 PROCESS MEASUREMENT ERROR (PME)

6.4.1 Process Measurement Error

Per Reference 4.7.7, the RCS flow loops were adjusted to indicate 100% Flow at full power during initial plant startup after refueling outage 4. A precision flow calorimetric is performed after each refueling outage to verify that RCS flow remains above the minimum Technical Specification flow (Reference 4.6.5). Therefore, the only process measurement effects which need to be considered are normal RCS density variations during operation and the uncertainties associated with the precision flow calorimetric. Thermal Expansion Effects and Installation Effects are calibrated out as a result of the normalization process.

6.4.2 Flow Calorimetric Uncertainties

NOTE

The 2.6% RCS Flow value in the following paragraph was determined prior to the implementation of the ultrasonic feedwater flow monitoring instrumentation system. This system provides indications of feedwater flow that are much more accurate than previously available. As a result, the uncertainty of Secondary Heat Balances has been significantly reduced. Since the uncertainty of the Secondary Heat Balance is used in the determination of the ± 2.6% Flow value used below, the value should remain bounding and contain some margin that could be captured in the future if desired.

Per Reference 4.7.7, the uncertainties associated with the precision flow calorimetric are ±2.6% Flow which equates to ±2.17% Flow Span (2.6% Flow / 120% Flow * 100% Flow Span). Therefore, the Flow Calorimetric Uncertainties (FCU) are as follows:

FCU (% Flow Span) = ±2.17% Flow Span

Per Design Input 5.8, the following equation is used to convert uncertainties from % Flow Span to % ΔP Span:

$$\text{FCU (\% } \Delta\text{P Span)} = 2\,(\text{FR})(\text{FCU (\% Flow Span)})$$

where,

FR = Flow Rate

Note: The decimal fraction for the flow rate and uncertainty is used in the equation.

Flow Rate (% Flow Span)	FCU (% ΔP Span)
100%	4.34%
87%	3.78%
60%	2.60%
50%	2.17%
40%	1.74%

6.4.3 Process Density Effects

Per Design Input 5.12, the following equation is used to compute the process measurement effect bias terms associated with RCS fluid density variations (DE) during normal operation:

$$\text{DE (\% } \Delta\text{P Span)} = \left(\frac{\left(\frac{\rho_C}{\rho_N} - 1 \right) \Delta P_C}{\Delta P \text{ Span}} \right) 100\% \ \Delta P \text{ Span}$$

For conservatism and to maximize the DE term, ΔP_C is set equal to ΔP Span. Therefore,

$$\text{DE (\% } \Delta\text{P Span)} = \left(\frac{\rho_C}{\rho_N} - 1\right) 100\% \ \Delta\text{P Span}$$

From Design Input 5.14, the following densities are used to compute the DE terms:

$\rho_C = 47.01789$ lbm / ft^3
$\rho_{MAX} = 47.64037$ lbm / ft^3
$\rho_{MIN} = 46.36606$ lbm / ft^3

Therefore,

DE (% ΔP Span) = 1.41% ΔP Span -1.31% ΔP Span

Per Design Input 5.13, the following equation is used to convert the DE uncertainties from % ΔP Span to % Flow Span:

$$\text{DE (\% Flow Span)} = 100\left(\sqrt{FR^2 + \text{DE (\% } \Delta\text{P Span)}} - FR\right)$$

where,

FR = Flow Rate

Note: The decimal fraction for the flow rate and uncertainty is used in the equation.

Therefore,

Flow Rate (% Flow Span)	positive DE (% Flow Span)	negative DE (% Flow Span)
100%	0.70%	-0.66%
87%	0.81%	-0.76%
60%	1.16%	-1.10%
50%	1.39%	-1.33%
40%	1.73%	-1.67%

6.5 PRIMARY ELEMENT ERROR (PE)

Per Reference 4.7.8, the repeatability of an un-calibrated elbow is ±4.00% Flow Reading. Therefore,

PE = ±4.00% Flow Reading

Therefore,

Flow Rate (% Flow Span)	PE (% Flow Span)
100%	4.00%
87%	3.48%
60%	2.40%
50%	2.00%
40%	1.60%

Per Design Input 5.8, the following equation is used to convert random primary element uncertainties from % Flow Span to % ΔP Span:

$$\text{PE (\% } \Delta\text{P Span)} = 100\left(2\,\text{FR}\left(\text{PE (\% Flow Span)}\right)\right)$$

where, FR = Flow Rate

Note: The decimal fraction for the flow rate and uncertainty is used in the equation.

Flow Rate (% Flow Span)	PE (% ΔP Span)
100%	8.00%
87%	6.06%
60%	2.88%
50%	2.00%
40%	1.28%

6.6 TRANSMITTER (FT-414, FT-415, FT-416, FT-424, FT-425, FT-426, FT-434, FT-435, AND FT-436)

6.6.1 Transmitter's Unverified Attributes of Reference Accuracy (RA_{xmtr})

Per Reference 4.4.3, the reference accuracy of the transmitter is ±0.25% Span and includes the effects of linearity, hysteresis, and repeatability. Per References 4.6.3, the transmitter is calibrated to ±0.50% Span at nine points (5 up and 4 down). Therefore, the calibration procedure verifies the attributes of linearity and hysteresis but not repeatability. Per Reference 4.6.1, the following equation is utilized to compute the repeatability portion of the transmitter reference accuracy:

$$\text{Repeatability} = \pm\frac{RA_{xmtr}}{\sqrt{3}} = \pm\frac{0.25\%\,\text{Span}}{\sqrt{3}} = \pm 0.14\%\ \text{Span}$$

Therefore,

$$RA_{xmtr} = \pm 0.14\%\ \Delta P\ \text{Span}$$

6.6.2 Transmitter Calibration Tolerance (CAL_{xmtr})

Per Reference 4.6.3, the transmitter is calibrated to ±0.50% Span. Therefore,

$$CAL_{xmtr} = \pm 0.50\%\ \Delta P\ \text{Span}$$

6.6.3 Transmitter Drift (DR_{xmtr})

Per Attachment C, the transmitter drift is given as ±0.20% Upper Range Limit (URL) over a time period of thirty months. Per Reference 4.4.3, the URL for a range code 5 transmitter is 750 inwc. Each loop has a different span. For conservatism, the minimum calibrated span of 385 inwc (Section 9.1) is used to calculate the transmitter drift term. Therefore,

$$DR_{xmtr} = \pm\left(\frac{0.20\%\ \text{URL}}{\text{Span}}\right) = \pm 0.20\%\left(\frac{750\,\text{inwc}}{385\,\text{inwc}}\right) = \pm 0.39\%\ \Delta P\ \text{Span}$$

6.6.4 Transmitter M&TE Effect (MTE_{xmtr})

A DMM, pressure gauge, and the instrument loop test point resistor are used to calibrate the transmitter. Per Reference 4.6.1, the combined (SRSS) accuracy of all the M&TE used to calibrate the transmitter is better than or equal to the calibration accuracy of the transmitter. For conservatism and flexibility in the choice of test equipment, the MTE term for the transmitter is set equal to the calibration tolerance of the transmitter.

$$MTE_{xmtr} = \pm 0.50\%\ \Delta P\ \text{Span}$$

6.6.5 Transmitter Temperature Effect (TE_{xmtr})

Per Reference 4.4.3, the transmitter temperature effect is given as ±0.75% Upper Range Limit + 0.50% Span for a change in temperature of 100°F from the temperature at which the transmitter was calibrated. Per Reference 4.4.3, the Upper Range Limit (URL) for a range code 5 transmitter is 750 inwc. Each loop has a different span. For conservatism, the minimum calibrated span of 385 inwc (Section 9.1) is used to calculate the transmitter temperature effect. Per Reference 4.6.4, the transmitters are located in the Containment building, and the calibration and maximum Containment temperatures are 50°F and 130°F respectively (Design Input 5.7). Therefore, a maximum change in temperature of 80°F is used to calculated the transmitter temperature effect. Therefore,

$$TE_{xmtr} = \pm\left(\frac{0.75\%\ \text{URL}}{\text{Span}} + 0.50\%\ \text{Span}\right)\left(\frac{\Delta T}{100°\text{F}}\right)$$

$$TE_{xmtr} = \pm\left(0.75\%\left(\frac{750\ \text{inwc}}{385\ \text{inwc}}\right) + 0.50\%\ \text{Span}\right)\left(\frac{80°\text{F}}{100°\text{F}}\right) = \pm 1.57\%\ \Delta P\ \text{Span}$$

6.6.6 Transmitter Static Pressure Effect (SPE_{xmtr})

Per Section 6.4.1, the transmitters were normalized to indicate 100% Flow at full power conditions during initial plant startup. Therefore, any static pressure bias is accounted for during calibration. However, the random dependent span and zero static pressure effects must be included in the uncertainty calculation. Per Reference 4.4.3, the static pressure span effect correction uncertainty is ±0.50% Reading per 1000 psia. Per Reference 4.2.4, the nominal operating pressure of the RCS is 2250 psia. Each loop has a different span. Per Section 9.1, the maximum reading for the transmitter is approximately 429 inwc. For conservatism, the minimum span of 385 inwc (Section 9.1) is used to compute the static pressure span effect.

Per Reference 4.4.3, the static pressure zero effect is ±0.66% Upper Range Limit per 1000 psia, and the Upper Range Limit of a range code 5 transmitter is 750 inwc.

Therefore, the normal static pressure effect for each transmitter is calculated with the following equation:

$$SPE_{xmtr} = \pm 0.50\% \left(\frac{429\,\text{inwc}}{385\,\text{inwc}}\right)\left(\frac{2250\,\text{psia}}{1000\,\text{psia}}\right) + 0.66\% \left(\frac{750\,\text{inwc}}{385\,\text{inwc}}\right)\left(\frac{2250\,\text{psia}}{1000\,\text{psia}}\right)$$

$$SPE_{xmtr} = \pm 4.15\%\ \Delta P\ \text{Span}$$

6.6.7 Transmitter Power Supply Effect (PSE_{xmtr})

Per Reference 4.4.3, the power supply effect associated with the transmitters is given as ±0.005% Span per volt variation in power supplied to the transmitter from the power supplied at the time of calibration. Per Reference 4.4.1, each instrument loop is powered by a Hagan Optimac Model 137-121, 45 Vdc supply or an NUS Model SPS-801 power supply. The power supply is powered by regulated instrument buses (Reference 4.2.1). Therefore, the power supply effect is negligible.

$$PSE_{xmtr} = \text{N/A}$$

6.6.8 Transmitter Total Device Uncertainty (TDU_{xmtr})

Per Reference 4.6.1, the Total Device Uncertainty for normal environmental conditions is computed using the following equation:

$$TDU_{xmtr} = \sqrt{(CAL_{xmtr} + MTE_{xmtr})^2 + RA_{xmtr}^{\ 2} + DR_{xmtr}^{\ 2} + TE_{xmtr}^{\ 2} + SPE_{xmtr}^{\ 2}}$$

$$TDU_{xmtr} = \pm 4.57\%\ \Delta P\ \text{Span}$$

6.6.9 Transmitter As Found Tolerance (AFT_{xmtr})

Per Reference 4.6.1, the As Found Tolerance (AFT) is computed using the following equation:

$$AFT_{xmtr} = \sqrt{CAL_{xmtr}^{\ 2} + DR_{xmtr}^{\ 2} + MTE_{xmtr}^{\ 2}}$$

$$AFT_{xmtr} = \pm 0.81\%\ \Delta P\ \text{Span}$$

6.6.10 Transmitter As Left Tolerance (ALT_{xmtr})

Per Reference 4.6.1, the As Left Tolerance (ALT) is computed using the following equation:

$ALT_{xmtr} = CAL_{xmtr}$
$ALT_{xmtr} = \pm 0.50\%\ \Delta P$ Span

Error Contributor	Value	Type	Section
RA	±0.14% ΔP Span	Random	6.6.1
CAL	±0.50% ΔP Span	Random	6.6.2
DR	±0.39% ΔP Span	Random	6.6.3
MTE	±0.50% ΔP Span	Random	6.6.4
TE	±1.57% ΔP Span	Random	6.6.5
SPE	±4.15% ΔP Span	Random	6.6.6
As Left Tolerance (ALT)	±0.50% ΔP Span	Random	6.6.10
As Found Tolerance (AFT)	±0.81% ΔP Span	Random	6.6.9
Total Device Uncertainty (non-accident)	±4.57% ΔP Span	Random	6.6.8

Transmitter Uncertainty Summary

6.7 COMPARATOR MODULE

6.7.1 Comparator's Unverified Attributes of Reference Accuracy (RA_{comp})

Per Reference 4.4.1, the comparator reference accuracy is ±0.50% Span. Per Reference 4.6.3, the comparator is calibrated to ±0.50% Span, and the calibration procedure verifies the attributes of linearity and hysteresis but not repeatability. Per Reference 4.6.1, the following equation is utilized to compute the repeatability portion of the comparator reference accuracy:

$$\text{Repeatability} = \pm\frac{RA_{comp}}{\sqrt{3}} = \pm\frac{0.50\%\,\text{Span}}{\sqrt{3}} = \pm 0.29\%\ \text{Span}$$

Therefore,

$$RA_{comp} = \pm 0.29\%\ \Delta P\ \text{Span}$$

6.7.2 Comparator Calibration Tolerance (CAL_{comp})

Per Reference 4.6.3, the comparator is calibrated to ±0.50% Span. Therefore,

$$CAL_{comp} = \pm 0.50\%\ \Delta P\ \text{Span}$$

6.7.3 Comparator Drift (DR_{comp})

Per Reference 4.4.1, no drift is specified for the Hagan or NUS comparator. Per Reference 4.6.1, if no drift is specified for a device, a default value of ±1.00% Span may be used. Based on historical data, Hagan comparator drift is ±0.25% Span (Attachment B). If the default value bounds the value obtained through a review of the historical data, the default value of ±1.00% Span may be used for comparator drift (Reference 4.6.1). Therefore, the default value of ±1.00% Span is used for comparator drift for the NUS and Hagan comparators.

$$DR_{comp} = \pm 1.00\%\ \Delta P\ \text{Span}$$

6.7.4 Comparator M&TE Effect (MTE_{comp})

Per Reference 4.6.1 (Page 113), the MTE error should be less than or equal to the CAL uncertainty for a given component. For conservatism, the MTE term for the comparator is set equal to the CAL_{comp} term.

$$MTE_{comp} = \pm 0.50\% \ \Delta P \text{ Span}$$

6.7.5 Comparator Temperature Effect (TE_{comp})

Per Reference 4.4.1, the NUS comparator temperature effect is given as ±0.04% Span per 1°C change in temperature from the temperature at the time of calibration, and no temperature effect is specified for the Hagan comparator. Per Reference 4.6.1, if no temperature effect is specified for a device, a default value of ±0.50% Span may be used for the temperature effect. Per Design Input 5.4, a change in temperature of 42°F (23.33°C) is used to compute the comparator temperature effect. Therefore,

$$TE_{comp} = \pm 0.04\% \text{ Span} \left(\frac{23.33°C}{1°C} \right)$$

$$TE_{comp} = \pm 0.93\% \ \Delta P \text{ Span}$$

Since either Westinghouse Hagan or NUS comparator may be used, the most restrictive temperature effect (NUS comparator) is used in this calculation.

6.7.6 Comparator Power Supply Effect (PSE_{comp})

Per Reference 4.4.1, no uncertainty for the comparator power supply effect is specified. Since the comparators are powered by regulated instrument buses, the comparator power supply effect is considered to be negligible. Therefore,

$$PSE_{comp} = N/A$$

6.7.7 Comparator Total Device Uncertainty (TDU_{comp})

Per Reference 4.6.1, the Total Device Uncertainty is computed using the following equation:

$$TDU_{comp} = \sqrt{(CAL_{comp} + MTE_{comp})^2 + RA_{comp}{}^2 + DR_{comp}{}^2 + TE_{comp}{}^2}$$

$$TDU_{comp} = \pm 1.72\% \ \Delta P \text{ Span}$$

6.7.8 Comparator As Found Tolerance (AFT_{comp})

Per Reference 4.6.1, the As Found Tolerance (AFT) is computed using the following equation:

$$AFT_{comp} = \sqrt{CAL_{comp}{}^2 + DR_{comp}{}^2 + MTE_{comp}{}^2}$$

However, per Reference 4.6.1, the MTE error is a random error, but due to the interdependence between MTE and CAL, it may be combined with CAL before being included in an overall error analysis. To provide additional conservatism for this setpoint, the following equation is used to compute the AFT term for the RCS flow comparator:

$$AFT_{comp} = \sqrt{(CAL + MTE)^2 + DR^2}$$

$$AFT_{comp} = \pm 1.41\% \ \Delta P \text{ Span}$$

6.7.9 Comparator As Left Tolerance (ALT_{comp})

Per Reference 4.6.1, the As Left Tolerance (ALT) is computed using the following equation:

$ALT_{comp} = CAL_{comp}$
$ALT_{comp} = \pm 0.50\%\ \Delta P$ Span

Error Contributor	Value	Type	Section
RA	±0.29% ΔP Span	Random	6.7.1
CAL	±0.50% ΔP Span	Random	6.7.2
DR	±1.00% ΔP Span	Random	6.7.3
MTE	±0.50% ΔP Span	Random	6.7.4
TE	±0.93% ΔP Span	Random	6.7.5
As Left Tolerance (ALT)	±0.50% ΔP Span	Random	6.7.9
As Found Tolerance (AFT)	±1.41% ΔP Span	Random	6.7.8
Total Device Uncertainty (non-accident)	±1.72% ΔP Span	Random	6.7.7

Comparator Module Uncertainty Summary

6.8 ISOLATOR MODULE

6.8.1 Isolator's Unverified Attributes of Reference Accuracy (RA_{isol})

Per Reference 4.4.1, the reference accuracy of the NUS isolator is ±0.10% Full Scale, and the reference accuracy of the Hagan isolator is not specified. Per Reference 4.6.1, if the reference accuracy of a device is not specified, the reference accuracy term is set equal to the calibration tolerance of the isolator. Per Reference 4.6.3, the isolator is calibrated to ±0.50% Span, and the calibration procedure verifies the attribute of linearity but not hysteresis or repeatability. Per Reference 4.6.1, the following equation is utilized to compute the repeatability and hysteresis portions of the isolator reference accuracy:

$$\text{Repeatability} = \pm\frac{RA_{isol}}{\sqrt{3}} = \pm\frac{0.50\%\ \text{Span}}{\sqrt{3}} = \pm 0.29\%\ \text{Span}$$

$$\text{Hysteresis} = \pm\frac{RA_{isol}}{\sqrt{3}} = \pm\frac{0.50\%\ \text{Span}}{\sqrt{3}} = \pm 0.29\%\ \text{Span}$$

$$RA_{isol} = \pm\sqrt{0.29^2 + 0.29^2}\ \%\ /\text{Span}$$

Therefore,

$$RA_{isol} = \pm 0.41\%\ \Delta P\ \text{Span}$$

6.8.2 Isolator Calibration Tolerance (CAL_{isol})

Per Reference 4.6.3, the isolator is calibrated to ±0.50% Span. Therefore,

$$CAL_{isol} = \pm 0.50\%\ \Delta P\ \text{Span}$$

6.8.3 Isolator Drift (DR_{isol})

Per Reference 4.4.1, no uncertainty for isolator drift is specified. The default value of ±1.00% Span is used to represent isolator drift (Reference 4.6.1) Therefore,

$$DR_{isol} = \pm 1.00\%\ \Delta P\ \text{Span}$$

6.8.4 Isolator M&TE Effect (MTE_{isol})

Per References 4.5.1-9, two DMMs are used to calibrate the isolator. Each DMM has an accuracy of ±0.25% Reading. The total MTE term is the SRSS of the individual DMM accuracy terms. For conservatism, a maximum reading of 5 Vdc is used to compute the accuracy of the DMMs as follows:

$$MTE_{isol} = \pm\sqrt{\left((2)\left[(0.25\%\ \text{Reading})\left(\frac{5\ \text{Vdc}}{4\ \text{Vdc}}\right)\right]^2\right)}$$

$$MTE_{isol} = \pm 0.44\%\ \Delta P\ \text{Span}$$

6.8.5 Isolator Temperature Effect (TE_{isol})

Per Reference 4.4.1, the NUS isolator temperature effect is given as ±0.01% Full Scale per 1°C change in temperature from the temperature at the time of calibration, and the temperature effect for the Hagan isolator is not specified. Per Reference 4.6.1, if the temperature effect for a device is not specified, a default value of ±0.50% Span may be used for the temperature effect term. Per Design Input 5.4, a change in temperature of 42°F (23.33°C) is used to compute the isolator temperature effect. Therefore,

$$TE_{isol} = \pm 0.01\%\ \text{Full Scale}\left(\frac{5\ \text{Vdc}}{100\%\ \text{Full Scale}}\right)\left(\frac{100\%\ \text{Span}}{4\ \text{Vdc}}\right)\left(\frac{23.33°\text{C}}{1°\text{C}}\right)$$

$$TE_{isol} = \pm 0.29\%\ \Delta P\ \text{Span}$$

Since either Westinghouse Hagan or NUS module may be used, the most restrictive temperature effect (default value of ±0.50% Span) is used for the isolator temperature effect.

$$TE_{isol} = \pm 0.50\%\ \Delta P\ \text{Span}$$

6.8.6 Isolator Power Supply Effect (PSE_{isol})

Per Reference 4.4.1, no uncertainty for the isolator power supply effect is specified. Since the isolators are powered by regulated instrument buses, the isolator power supply effect is considered to be negligible. Therefore,

$PSE_{isol} = N/A$

6.8.7 Isolator Total Device Uncertainty (TDU_{isol})

Per Reference 4.6.1, the Total Device Uncertainty is computed using the following equation:

$$TDU_{isol} = \sqrt{(CAL_{isol} + MTE_{isol})^2 + RA_{isol}^2 + DR_{isol}^2 + TE_{isol}^2}$$

$TDU_{isol} = \pm 1.52\%\ \Delta P$ Span

6.8.8 Isolator As Found Tolerance (AFT_{isol})

Per Reference 4.6.1, the As Found Tolerance (AFT) is computed using the following equation:

$$AFT_{isol} = \sqrt{CAL_{isol}^2 + DR_{isol}^2 + MTE_{isol}^2}$$

$AFT_{isol} = \pm 1.20\%\ \Delta P$ Span

6.8.9 Isolator As Left Tolerance (ALT_{isol})

Per Reference 4.6.1, the As Left Tolerance (ALT) is computed using the following equation:

$ALT_{isol} = CAL_{isol}$
$ALT_{isol} = \pm 0.50\%\ \Delta P$ Span

Error Contributor	Value	Type	Section
RA	±0.41% ΔP Span	Random	6.8.1
CAL	±0.50% ΔP Span	Random	6.8.2
DR	±1.00% ΔP Span	Random	6.8.3
MTE	±0.44% ΔP Span	Random	6.8.4
TE	±0.50% ΔP Span	Random	6.8.5
As Left Tolerance (ALT)	±0.50% ΔP Span	Random	6.8.9
As Found Tolerance (AFT)	±1.20% ΔP Span	Random	6.8.8
Total Device Uncertainty (non-accident)	±1.52% ΔP Span	Random	6.8.7

Isolator Module Uncertainty Summary

6.9 INDICATOR

Per References 4.1.1-3 and 4.1.5, the indicators receive a differential pressure input which is converted to % Flow Span using a square root scale. Therefore, the uncertainties associated with the indicator are differential pressure uncertainties with the exception of the indicator readability term.

6.9.1 Indicator's Unverified Attributes of Reference Accuracy (RA_{ind})

Per Reference 4.4.2, the reference accuracy of the indicator is ±2.00% Span and includes the effects of linearity, hysteresis, and repeatability (Design Input 5.5). Per Reference 4.6.3, the indicator is calibrated to ±2.00% Span at nine points (5 up and 4 down). Therefore, the calibration procedure verifies the attributes of linearity and hysteresis but not repeatability. Per Reference 4.6.1, the following equation is utilized to compute the repeatability portion of the indicator reference accuracy:

$$\text{Repeatability} = \pm\frac{RA_{ind}}{\sqrt{3}} = \pm\frac{2.00\%\ \text{Span}}{\sqrt{3}} = \pm 1.15\%\ \text{Span}$$

Therefore,

$$RA_{ind} = \pm 1.15\%\ \Delta P\ \text{Span}$$

6.9.2 Indicator Calibration Tolerance (CAL_{ind})

Per Reference 4.6.3, the indicator is calibrated to ±2.00% Span. Therefore,

$$CAL_{ind} = \pm 2.00\%\ \Delta P\ \text{Span}$$

6.9.3 Indicator Drift (DR_{ind})

Per Attachment D, indicator drift is specified as ±1.00% Span per year. Per Reference 4.6.1, the time interval between calibrations is 22.5 month (18 months + 25%), and the following equation is used to compute the indicator drift:

$$DR_{ind} = \pm\sqrt{1.00\%\ \text{Span}\left(\frac{22.5\ \text{months}}{12\ \text{months}}\right)}$$

$$DR_{ind} = \pm 1.37\%\ \Delta P\ \text{Span}$$

6.9.4 Indicator M&TE Effect (MTE_{ind})

Per Reference 4.5.1-9, one DMM with an accuracy of ±0.25% Reading is used to calibrate the indicator. The calibration points are cardinal points on the indicator scale (Reference 4.5.1-9). Therefore, the indicator resolution is not included in the MTE term. For conservatism, a maximum reading of 5 Vdc is used to compute the accuracy of the DMM as follows:

$$MTE_{ind} = \pm(0.25\%\ \text{Reading})\left(\frac{5\ \text{Vdc}}{4\ \text{Vdc}}\right) = \pm 0.31\%\ \Delta P\ \text{Span}$$

6.9.5 Indicator Temperature Effect (TE_{ind})

Per Attachment D, the indicator temperature effect is specified as ±0.10% Span per °C change from the temperature at the time of calibration. Per Design Input 5.2, a change in temperature of 9.4°C is used to compute the indicator temperature effect.

$$TE_{ind} = \pm 0.10\%\ \text{Span}\left(\frac{9.4°\text{C}}{°\text{C}}\right)$$

$$TE_{ind} = \pm 0.94\%\ \Delta P\ \text{Span}$$

6.9.6 Indicator Power Supply Effect (PSE_{ind})

Per References 4.1.1-3, the indicators are not powered by an external source. Therefore, there is no indicator power supply effect.

$$PSE_{ind} = N/A$$

6.9.7 Indicator Readability (RD_{ind})

Per Reference 4.6.1, the indicator readability term is ½ of the smallest indicator scale demarcation. Per Reference 4.1.5, the indicator has a square root scale with a range of 0 to 120% Flow which equals 0 to 100% Flow Span. Per Design Input 5.9, the flow rates analyzed in this calculation are from 40 to 100% Flow Span. Between 40 and 100% Flow Span, the minor divisions are 2% Flow. Therefore,

$$RD_{ind} = \pm\left(\frac{2\%\ \text{Flow}}{2}\right)\left(\frac{100\%\ \text{Flow Span}}{100\%\ \text{Flow}}\right) = \pm 1.00\%\ \text{Flow Span}$$

6.9.8 Indicator Total Device Uncertainty (TDU_{ind})

The indicator uncertainty, expressed in terms of % ΔP Span without the readability term, is computed using the following equation:

$$TDU_\Delta P_{ind} = \sqrt{(CAL_{ind} + MTE_{ind})^2 + RA_{ind}{}^2 + DR_{ind}{}^2 + TE_{ind}{}^2}$$

$$TDU_\Delta P_{ind} = \pm 3.07\%\ \Delta P\ \text{Span}$$

Per Design Input 5.8 and Reference 4.6.1, the Total Device Uncertainty, expressed in terms of % Flow Span including the readability term, is computed with the following equation:

$$TDU_{ind} = \sqrt{\left(\frac{TDU_\Delta P_{ind}}{2FR}\right)^2 + RD_{ind}^{\ 2}}$$

where,

$TDU_\Delta P_{ind}$ = ±3.07% ΔP Span
FR = Flow Rate (e.g. @ 50% Flow, FR = 0.5)
RD_{ind} = ±1.00% Flow Span

Flow Rate (% Flow Span)	TDU_{ind} (% Flow Span)
100%	1.83%
87%	2.03%
60%	2.75%
50%	3.23%
40%	3.97%

Indicator Uncertainties

6.9.9 Indicator As Found Tolerance (AFT_{ind})

Per Reference 4.6.1, the As Found Tolerance (AFT) is computed using the following equation:

$$AFT_{ind} = \sqrt{CAL_{ind}^{\ 2} + DR_{ind}^{\ 2} + MTE_{ind}^{\ 2}}$$

AFT_{ind} = ±2.44% ΔP Span

6.9.10 Indicator As Left Tolerance (ALT_{ind})

Per Reference 4.6.1, the As Left Tolerance (ALT) is computed using the following equation:

$ALT_{ind} = CAL_{ind}$
$ALT_{ind} = \pm 2.00\%\ \Delta P$ Span

Error Contributor	Value	Type	Section
RA	±1.15% ΔP Span	Random	6.9.1
CAL	±2.00% ΔP Span	Random	6.9.2
DR	±1.37% ΔP Span	Random	6.9.3
MTE	±0.31% ΔP Span	Random	6.9.4
TE	±0.94% ΔP Span	Random	6.9.5
RD	±1.00% Flow Span	Random	6.9.7
As Left Tolerance (ALT)	±2.00% ΔP Span	Random	6.9.10
As Found Tolerance (AFT)	±2.44% ΔP Span	Random	6.9.9
Total Device Uncertainty (non-accident)	See Table in Section 6.9.8	Random	6.9.8

Indicator Uncertainty Summary

7.0 TOTAL LOOP UNCERTAINTY (TLU)

7.1 TOTAL LOOP UNCERTAINTY - PLANT NORMAL

7.1.1 Total Loop Uncertainty - Indicator FI-414, 415, 416, 424, 425, 426, 434, 435, AND 436

Per Reference 4.6.1 and Design Input 5.8, the total loop uncertainty associated with the indicator is computed with the following equation:

$$TLU_{ind} = \pm\sqrt{PE^2 + \left(\frac{TDU_{xmtr}}{2FR}\right)^2 + \left(\frac{TDU_{isol}}{2FR}\right)^2 + TDU_{ind}{}^2 + FCU^2 + DE}$$

where,

PE from Section 6.5
TDU_{xmtr} =± 4.57% ΔP Span, from Section 6.6.8
FR = Flow rate expressed as a decimal (ex., @ 87% Flow, FR = 0.87)
TDU_{isol} = ±1.52% ΔP Span, from Section 6.8.7
TDU_{ind} = ±3.07% ΔP Span from Section 6.9.8
FCU from Section 6.4.2
DE from Section 6.4.3

Flow Rate (% Flow Span)	FCU (% Flow Span)	TDU_{xmtr} (% Flow Span)	TDU_{isol} (% Flow Span)
100%	2.17%	2.29%	0.76%
87%	2.17%	2.63%	0.87%
60%	2.17%	3.81%	1.27%
50%	2.17%	4.57%	1.52%
40%	2.17%	5.71%	1.90%

Flow Rate (% Flow Span)	PE (% Flow Span)	TDU_{ind} (% Flow Span)	random TLU_{ind} (% Flow Span)
100%	4.00%	1.83%	5.46%
87%	3.48%	2.03%	5.35%
60%	2.40%	2.75%	5.84%
50%	2.00%	3.23%	6.51%
40%	1.60%	3.97%	7.70%

Flow Rate (% Flow Span)	positive DE (% Flow Span)	negative DE (% Flow Span)	positive TLU (% Flow Span)	negative TLU (% Flow Span)
100%	0.70%	-0.66%	6.17%	-6.12%
87%	0.81%	-0.76%	6.15%	-6.10%
60%	1.16%	-1.10%	7.01%	-6.94%
50%	1.39%	-1.33%	7.90%	-7.83%
40%	1.73%	-1.67%	9.42%	-9.37%

7.1.2 Total Loop Uncertainty - Input to ERFIS

Per Reference 4.6.1, the total loop uncertainty at the input to ERFIS is computed with the following equation:

$$TLU_{ERFIS} = \pm\sqrt{PE^2 + TDU_{xmtr}{}^2 + TDU_{isol}{}^2 + FCU^2} + DE$$

where,

PE from Section 6.5
TDU_{xmtr} = ±4.57% ΔP Span, from Section 6.6.8
TDU_{isol} = ±1.52% ΔP Span, from Section 6.8.7
FCU from Section 6.4.2
DE from Section 6.4.3

Flow Rate (% Flow Span)	PE (% ΔP Span)	FCU (% ΔP Span)	TDU_{xmtr} (% ΔP Span)	TDU_{isol} (% ΔP Span)	random TLU_{ERFIS} (% ΔP Span)
100%	8.00%	4.34%	4.57%	1.52%	10.30%
87%	6.06%	3.78%	4.57%	1.52%	8.61%
60%	2.88%	2.60%	4.57%	1.52%	6.19%
50%	2.00%	2.17%	4.57%	1.52%	5.65%
40%	1.28%	1.74%	4.57%	1.52%	5.28%

Flow Rate (% Flow Span)	positive DE (% ΔP Span)	negative DE (% ΔP Span)	positive TLU_{ERFIS} (% ΔP Span)	negative TLU_{ERFIS} (% ΔP Span)
100%	1.41%	-1.31%	11.71%	-11.61%
87%	1.41%	-1.31%	10.02%	-9.92%
60%	1.41%	-1.31%	7.60%	-7.50%
50%	1.41%	-1.31%	7.06%	-6.96%
40%	1.41%	-1.31%	6.69%	-6.59%

7.2 TOTAL LOOP UNCERTAINTY - ACCIDENT

Per Section 6.1, accident effects are not computed.

7.3 TOTAL LOOP UNCERTAINTY - POST SEISMIC

7.3.1 Total Loop Uncertainty - Low RCS Flow Reactor Trip

FC-414, 415, 416, 424, 425, 426, 434, 435, and 436

Per Reference 4.6.1, the total loop uncertainty associated with the comparators that provide the Low RCS Flow Reactor Trip is computed with the following equation:

$$TLU_{comp} = \pm\sqrt{PE^2 + TDU_{xmtr}{}^2 + TDU_{comp}{}^2 + FCU^2 + SE_{xmtr}{}^2} + DE$$

where,

PE = ±6.06% ΔP Span @ 87% Flow Span (Sections 5.10 and 6.5)
TDU_{xmtr} = ±4.57% ΔP Span, from Section 6.6.8
TDU_{comp} = ±1.72% ΔP Span, from Section 6.7.7
FCU = ±3.78% ΔP Span @ 87% Flow Span (Sections 5.10, 6.4.2)
SE_{xmtr} = ±0.97% ΔP Span from Section 6.2
DE = +1.41% ΔP Span -1.31% ΔP Span values from Section 6.4.3

TLU_{comp} = ±8.71% ΔP Span 1.41% ΔP Span -1.31% ΔP Span
TLU_{comp} = +10.12% ΔP Span -10.02% ΔP Span

Per Design Input 5.8, the following equation is used to express the comparator uncertainties in terms of % Flow Span:

$$TLU_{comp}(\%\ \text{Flow Span}) = \frac{TLU_{comp}(\%\ \Delta P\ \text{Span})}{2FR}$$

where, FR = 0.87 (87% Flow Span expressed as a decimal) [Design Input 5.10]

TLU_{comp} (%Flow Span) = +5.82% Flow Span -5.76% Flow Span

7.4 LOOP AS FOUND TOLERANCE

7.4.1 Loop As Found Tolerance - Indicator FI-414, 415, 416, 424, 425, 426, 434, 435, AND 436

Per Reference 4.6.1, the following equation is used to calculate the indicator Loop As Found Tolerance ($LAFT_{ind}$):

$$LAFT_{ind} = \pm\sqrt{AFT_{xmtr}^{\ 2} + AFT_{isol}^{\ 2} + AFT_{ind}^{\ 2}}$$

$$LAFT_{ind} = \pm 2.84\%\ \Delta P\ \text{Span}$$

7.4.2 Loop As Found Tolerance - Input to ERFIS

Per Reference 4.6.1, the following equation is used to calculate the ERFIS Loop As Found Tolerance ($LAFT_{ERFIS}$):

$$LAFT_{ERFIS} = \pm\sqrt{AFT_{xmtr}^{\ 2} + AFT_{isol}^{\ 2}}$$

$$LAFT_{ERFIS} = \pm 1.45\%\ \Delta P\ \text{Span}$$

7.4.3 Loop As Found Tolerance - Comparators

FC-414, 415, 416, 424, 425, 426, 434, 435, and 436

Per Reference 4.6.1, the following equation is used to calculate the comparator Loop As Found Tolerance ($LAFT_{comp}$):

$$LAFT_{comp} = \pm\sqrt{AFT_{xmtr}^{\ 2} + AFT_{comp}^{\ 2}}$$
$$LAFT_{comp} = \pm 1.63\%\ \Delta P\ \text{Span}$$

Per Design Input 5.8, the following equation is used to express the comparator loop as found tolerance in terms of % Flow Span:

$$LAFT_{comp}(\%\ \text{Flow Span}) = \frac{LAFT_{comp}(\%\ \Delta P\ \text{Span})}{2FR}$$

where, FR = 87% Flow Span (Design Input 5.10)

$$LAFT_{comp} = \pm 0.94\%\ \text{Flow Span}$$

7.5 GROUP AS FOUND TOLERANCE

7.5.1 Group As Found Tolerance - Indicator FI-414, 415, 416, 424, 425, 426, 434, 435, AND 436

Per Reference 4.6.1, the following equation is used to calculate the indicator Group As Found Tolerance ($GAFT_{ind}$):

$$GAFT_{ind} = \pm\sqrt{AFT_{isol}^{\ 2} + AFT_{ind}^{\ 2}}$$
$$GAFT_{ind} = \pm 2.72\%\ \Delta P\ \text{Span}$$

7.5.2 Group As Found Tolerance - Input to ERFIS

Per Reference 4.6.1, the following equation is used to calculate the ERFIS Group As Found Tolerance ($GAFT_{ERFIS}$):

$$GAFT_{ERFIS} = \pm AFT_{isol}$$
$$GAFT_{ERFIS} = \pm 1.20\% \ \Delta P \text{ Span}$$

7.5.3 Group As Found Tolerance - Comparators

FC-414, 415, 416, 424, 425, 426, 434, 435, and 436

Per Reference 4.6.1, the following equation is used to calculate the comparator Group As Found Tolerance ($GAFT_{comp}$):

$$GAFT_{comp} = \pm AFT_{comp}$$
$$GAFT_{comp} = \pm 1.41\% \ \Delta P \text{ Span}$$

Per Design Input 5.8, the following equation is used to express the comparator group as found tolerance in terms of % Flow Span:

$$GAFT_{comp}(\% \text{ Flow Span}) = GAFT_{comp}(\% \ \Delta P \text{ Span})\left(\frac{100}{2FR}\right)$$

where, FR = 0.87 (87% Flow Span) [Design Input 5.10]

$$GAFT_{comp} = \pm 0.81\% \text{ Flow Span}$$

8.0 DISCUSSION OF RESULTS

Low RCS Flow Reactor Trip Setpoint - FC-414, 415, 416, 424, 425, 426, 434, 435, and 436

The function of this setpoint is to provide a reactor trip before reactor coolant flow drops below the Low RCS flow analytical limit. Therefore, the Low RCS Flow setpoint is a decreasing setpoint and is computed using positive total loop uncertainties. Per Reference 4.6.1, the following equation is used to calculate the minimum value for this setpoint:

$$SP_{limit} \geq AL + TLU$$

where,

SP_{limit} = calculated setpoint limit
AL = analytical limit
TLU = total loop uncertainty

Per Section 7.3.1 of this calculation, the positive total loop uncertainty associated with this setpoint is 5.82% Flow Span. Per Design Input 5.10, the Low RCS Flow Reactor Trip setpoint analytical limit is 87% Flow Span. Therefore,

$$SP_{limit} \geq 87\% \text{ Flow Span} + 5.82\% \text{ Flow Span}$$
$$SP_{limit} \geq 92.82\% \text{ Flow Span}$$

Per Reference 4.5.1-9, the Low RCS Flow Reactor Trip setpoint is currently calibrated to 94.68% Flow Span decreasing. The Margin (M) associated with this setpoint is computed as follows:

$$M = \text{Calibrated Setpoint} - SP_{limit}$$
$$M = 94.68\% \text{ Flow Span} - 92.82\% \text{ Flow Span}$$
$$M = 1.86\% \text{ Flow Span}$$

Per Section 7.5.3 of this calculation, the Group As Found Tolerance (GAFT) is 0.81% Flow Span. Per Reference 4.7.3, the Technical Specification setpoint is 94.26% Span. Since the calibrated setpoint (94.68% Flow Span Reference 4.5.1-9) is different than the Technical Specification setpoint, the Technical Specification Allowable Value is evaluated against the Technical Specification setpoint as follows:

AV ≥ TSSP - GAFT, where TSSP = Technical Specification setpoint
AV ≥ 94.26% Flow Span - 0.81% Flow Span
AV ≥ 93.45% Flow Span

The Loop As Found Tolerance (LAFT) of 0.94% Flow Span is computed in Section 7.4.3. Per Reference 4.6.1, the Channel Operability Limit (COL) is computed with the following equation:

COL = TSSP - LAFT, where TSSP = Technical Specification setpoint
COL = 94.26% Flow Span - 0.94% Flow Span
COL = 93.32% Flow Span

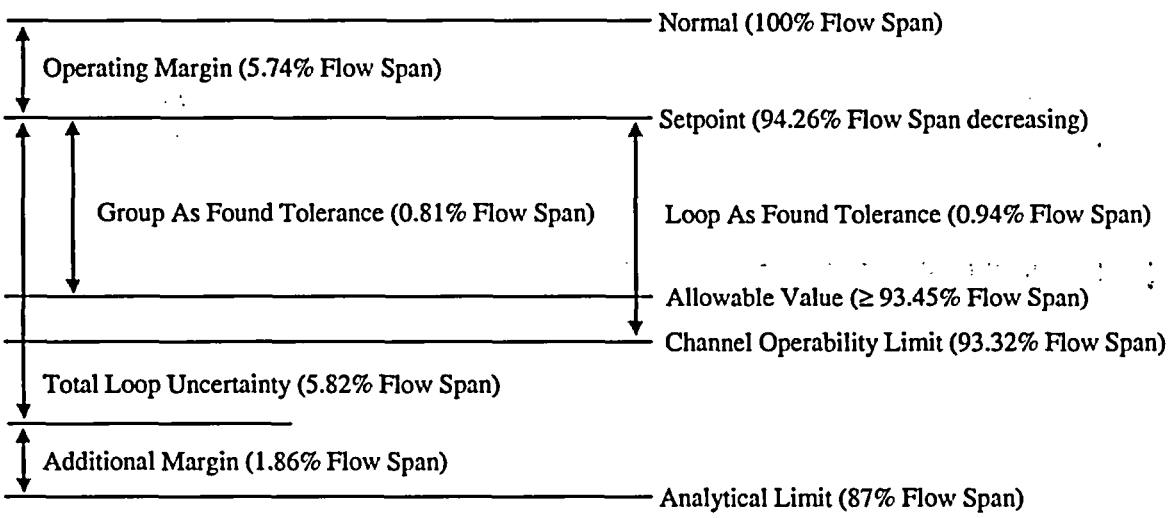

Low RCS Flow Reactor Trip Setpoint Diagram

Per Reference 4.7.3, the current Technical Specification setpoint and Allowable Value are 94.26% Flow Span decreasing and 93.47% Flow Span respectively. Therefore, the current Technical Specification setpoint and Allowable Value are conservative.

8.1 IMPACT ON IMPROVED TECHNICAL SPECIFICATIONS

This calculation results in no changes to the Technical Specifications.

8.2 IMPACT ON UFSAR

This calculation results in no changes to the UFSAR.

8.3 IMPACT ON DESIGN BASIS DOCUMENTS

This calculation impacts no design basis documents.

8.4 IMPACT ON OTHER CALCULATIONS

This calculation impacts the following calculations:

1. RNP-F/NFSA-0045

8.5 IMPACT ON PLANT PROCEDURES

This calculation impacts the following procedures:

1. LP-060, Reactor Coolant Flow Channel 414
2. LP-061, Reactor Coolant Flow Channel 415
3. LP-062, Reactor Coolant Flow Channel 416
4. LP-063, Reactor Coolant Flow Channel 424
5. LP-064, Reactor Coolant Flow Channel 425
6. LP-065, Reactor Coolant Flow Channel 426
7. LP-066, Reactor Coolant Flow Channel 434
8. LP-067, Reactor Coolant Flow Channel 435
9. LP-068, Reactor Coolant Flow Channel 436
10. MMM-006, Appendix B Calibration Data Sheets
11. EST-047, Reactor Coolant Flow Test (18 months)
12. OST-020, Shiftly Surveillances

9.0 SCALING CALCULATIONS

9.1 FLOW TRANSMITTER (FT-414, 415, 416, 424, 425, 426, 434, 435, AND 436)

Per Reference 4.7.4, the RCS flow transmitters are Rosemount model 1154HP5 differential pressure transmitters. Per Reference 4.4.3, range code 5 transmitters have the following differential pressure ranges 0-150 to 0-750 inwc. Per Reference 4.7.7, each loop was normalized to indicate 100% Flow at full power conditions.

FT-414

Per Reference 4.6.4 and Assumption 5.15, the differential pressure (DP) associated with 120% flow for FT-414 is 424.78 inwc.

The transmitter is calibrated such that an input from 0 to 424.78 inwc would yield an output of 4 to 20 mAdc (monitored as 1.000 Vdc to 5.000 Vdc across a precision test resistor). To facilitate calibration, the transmitter inputs are rounded down to a whole inwc. The following equation is used to compute the required transmitter output (Vdc) for a given differential pressure (DP) input (inwc):

$$E_o = \left(\frac{4.000\ \text{Vdc}}{424.78\ \text{inwc}}\right) DP + 1.000\ \text{Vdc}$$

Per Section 6.6.9 of this calculation, the As Found Tolerance (AFT) of the transmitter is ±0.81% Span. Per Section 6.6.10 of this calculation, the As Left Tolerance (ALT) of the transmitter is ±0.50% Span. The AFT and ALT are converted to voltage units with the following equations:

$$\text{AFT(Vdc)} = \pm 4\ \text{Vdc}\left(\frac{\text{AFT(\% Span)}}{100}\right) = \pm 0.032\ \text{Vdc}$$

$$\text{ALT(Vdc)} = \pm 4\ \text{Vdc}\left(\frac{\text{ALT(\% Span)}}{100}\right) = \pm 0.020\ \text{Vdc}$$

The calibration table for transmitter FT-414 is as follows:

Required Input (inwc)	Desired Output (Vdc)	As Found Tolerance (Vdc)	As Left Tolerance (Vdc)
0	1.000	0.968 to 1.032	0.980 to 1.020
106	1.998	1.966 to 2.030	1.978 to 2.018
212	2.996	2.964 to 3.028	2.976 to 3.016
318	3.994	3.962 to 4.026	3.974 to 4.014
424	4.993	4.961 to 5.025	4.973 to 5.013

Transmitter Calibration Table

FT-415

Per Reference 4.6.4 and Assumption 5.15, the differential pressure (DP) associated with 120% flow for FT-415 is 429.40 inwc.

The transmitter is calibrated such that an input from 0 to 429.40 inwc would yield an output of 4 to 20 mAdc (monitored as 1.000 Vdc to 5.000 Vdc across a precision test resistor). To facilitate calibration, the transmitter inputs are rounded down to a whole inwc. The following equation is used to compute the required transmitter output (Vdc) for a given differential pressure (DP) input (inwc):

$$E_0 = \left(\frac{4.000\ \text{Vdc}}{429.40\ \text{inwc}}\right) DP + 1.000\ \text{Vdc}$$

Per Section 6.6.9 of this calculation, the As Found Tolerance (AFT) of the transmitter is ±0.81% Span. Per Section 6.6.10 of this calculation, the As Left Tolerance (ALT) of the transmitter is ±0.50% Span. The AFT and ALT are converted to voltage units with the following equations:

$$\text{AFT(Vdc)} = \pm 4\ \text{Vdc}\left(\frac{\text{AFT(\% Span)}}{100}\right) = \pm 0.032\ \text{Vdc}$$

$$\text{ALT(Vdc)} = \pm 4\ \text{Vdc}\left(\frac{\text{ALT(\% Span)}}{100}\right) = \pm 0.020\ \text{Vdc}$$

The calibration table for transmitter FT-415 is as follows:

Required Input (inwc)	Desired Output (Vdc)	As Found Tolerance (Vdc)	As Left Tolerance (Vdc)
0	1.000	0.968 to 1.032	0.980 to 1.020
107	1.997	1.965 to 2.029	1.977 to 2.017
214	2.993	2.961 to 3.025	2.973 to 3.013
322	4.000	3.968 to 4.032	3.980 to 4.020
429	4.996	4.964 to 5.028	4.976 to 5.016

Transmitter Calibration Table

FT-416

Per Reference 4.6.4 and Assumption 5.15, the differential pressure (DP) associated with 120% flow for FT-416 is 403.89 inwc.

The transmitter is calibrated such that an input from 0 to 403.89 inwc would yield an output of 4 to 20 mAdc (monitored as 1.000 Vdc to 5.000 Vdc across a precision test resistor). To facilitate calibration, the transmitter inputs are rounded down to a whole inwc. The following equation is used to compute the required transmitter output (Vdc) for a given differential pressure (DP) input (inwc):

$$E_o = \left(\frac{4.000\ \text{Vdc}}{403.89\ \text{inwc}}\right) DP + 1.000\ \text{Vdc}$$

Per Section 6.6.9 of this calculation, the As Found Tolerance (AFT) of the transmitter is ±0.81% Span. Per Section 6.6.10 of this calculation, the As Left Tolerance (ALT) of the transmitter is ±0.50% Span. The AFT and ALT are converted to voltage units with the following equations:

$$\text{AFT(Vdc)} = \pm 4\ \text{Vdc}\left(\frac{\text{AFT(\% Span)}}{100}\right) = \pm 0.032\ \text{Vdc}$$

$$\text{ALT(Vdc)} = \pm 4\ \text{Vdc}\left(\frac{\text{ALT(\% Span)}}{100}\right) = \pm 0.020\ \text{Vdc}$$

The calibration table for transmitter FT-416 is as follows:

Required Input (inwc)	Desired Output (Vdc)	As Found Tolerance (Vdc)	As Left Tolerance (Vdc)
0	1.000	0.968 to 1.032	0.980 to 1.020
100	1.990	1.958 to 2.022	1.970 to 2.010
202	3.001	2.969 to 3.033	2.981to 3.021
302	3.991	3.959 to 4.023	3.971 to 4.011
403	4.991	4.959 to 5.023	4.971 to 5.011

Transmitter Calibration Table

FT-424

Per Reference 4.6.4 and Assumption 5.15, the differential pressure (DP) associated with 120% flow for FT-424 is 407.50 inwc.

The transmitter is calibrated such that an input from 0 to 407.50 inwc would yield an output of 4 to 20 mAdc (monitored as 1.000 Vdc to 5.000 Vdc across a precision test resistor). To facilitate calibration, the transmitter inputs are rounded down to a whole inwc. The following equation is used to compute the required transmitter output (Vdc) for a given differential pressure (DP) input (inwc):

$$E_o = \left(\frac{4.000\ \text{Vdc}}{407.50\ \text{inwc}}\right) DP + 1.000\ \text{Vdc}$$

Per Section 6.6.9 of this calculation, the As Found Tolerance (AFT) of the transmitter is ±0.81% Span. Per Section 6.6.10 of this calculation, the As Left Tolerance (ALT) of the transmitter is ±0.50% Span. The AFT and ALT are converted to voltage units with the following equations:

$$\text{AFT(Vdc)} = \pm 4\ \text{Vdc}\left(\frac{\text{AFT(\% Span)}}{100}\right) = \pm 0.032\ \text{Vdc}$$

$$\text{ALT(Vdc)} = \pm 4\ \text{Vdc}\left(\frac{\text{ALT(\% Span)}}{100}\right) = \pm 0.020\ \text{Vdc}$$

The calibration table for transmitter FT-424 is as follows:

Required Input (inwc)	Desired Output (Vdc)	As Found Tolerance (Vdc)	As Left Tolerance (Vdc)
0	1.000	0.968 to 1.032	0.980 to 1.020
101	1.991	1.959 to 2.023	1.971 to 2.011
203	2.993	2.961 to 3.025	2.973 to 3.013
305	3.994	3.962 to 4.026	3.974 to 4.014
407	4.995	4.963 to 5.027	4.975 to 5.015

Transmitter Calibration Table

FT-425

Per Reference 4.6.4 and Assumption 5.15, the differential pressure (DP) associated with 120% flow for FT-425 is 385.19 inwc.

The transmitter is calibrated such that an input from 0 to 385.19 inwc would yield an output of 4 to 20 mAdc (monitored as 1.000 Vdc to 5.000 Vdc across a precision test resistor). To facilitate calibration, the transmitter inputs are rounded down to a whole inwc. The following equation is used to compute the required transmitter output (Vdc) for a given differential pressure (DP) input (inwc):

$$E_o = \left(\frac{4.000\ \text{Vdc}}{385.19\ \text{inwc}}\right) DP + 1.000\ \text{Vdc}$$

Per Section 6.6.9 of this calculation, the As Found Tolerance (AFT) of the transmitter is ±0.81% Span. Per Section 6.6.10 of this calculation, the As Left Tolerance (ALT) of the transmitter is ±0.50% Span. The AFT and ALT are converted to voltage units with the following equations:

$$\text{AFT(Vdc)} = \pm 4\ \text{Vdc}\left(\frac{\text{AFT(\% Span)}}{100}\right) = \pm 0.032\ \text{Vdc}$$

$$\text{ALT(Vdc)} = \pm 4\ \text{Vdc}\left(\frac{\text{ALT(\% Span)}}{100}\right) = \pm 0.020\ \text{Vdc}$$

The calibration table for transmitter FT-425 is as follows:

Required Input (inwc)	Desired Output (Vdc)	As Found Tolerance (Vdc)	As Left Tolerance (Vdc)
0	1.000	0.968 to 1.032	0.980 to 1.020
96	1.997	1.965 to 2.029	1.977 to 2.017
192	2.994	2.962 to 3.026	2.974 to 3.014
288	3.991	3.959 to 4.023	3.971 to 4.011
385	4.998	4.966 to 5.030	4.978 to 5.018

Transmitter Calibration Table

FT-426

Per Reference 4.6.4 and Assumption 5.15, the differential pressure (DP) associated with 120% flow for FT-426 is 415.41 inwc.

The transmitter is calibrated such that an input from 0 to 415.41 inwc would yield an output of 4 to 20 mAdc (monitored as 1.000 Vdc to 5.000 Vdc across a precision test resistor). To facilitate calibration, the transmitter inputs are rounded down to a whole inwc. The following equation is used to compute the required transmitter output (Vdc) for a given differential pressure (DP) input (inwc):

$$E_o = \left(\frac{4.000\ \text{Vdc}}{415.41\ \text{inwc}}\right) DP + 1.000\ \text{Vdc}$$

Per Section 6.6.9 of this calculation, the As Found Tolerance (AFT) of the transmitter is ±0.81% Span. Per Section 6.6.10 of this calculation, the As Left Tolerance (ALT) of the transmitter is ±0.50% Span. The AFT and ALT are converted to voltage units with the following equations:

$$\text{AFT(Vdc)} = \pm 4\ \text{Vdc}\left(\frac{\text{AFT(\% Span)}}{100}\right) = \pm 0.032\ \text{Vdc}$$

$$\text{ALT(Vdc)} = \pm 4\ \text{Vdc}\left(\frac{\text{ALT(\% Span)}}{100}\right) = \pm 0.020\ \text{Vdc}$$

The calibration table for transmitter FT-426 is as follows:

Required Input (inwc)	Desired Output (Vdc)	As Found Tolerance (Vdc)	As Left Tolerance (Vdc)
0	1.000	0.968 to 1.032	0.980 to 1.020
100	1.963	1.931 to 1.995	1.943 to 1.983
210	3.022	2.990 to 3.054	3.002 to 3.042
310	3.985	3.953 to 4.017	3.965 to 4.005
415	4.996	4.964 to 5.028	4.976 to 5.016

Transmitter Calibration Table

FT-434

Per Reference 4.6.4 and Assumption 5.15, the differential pressure (DP) associated with 120% flow for FT-434 is 385.54 inwc.

The transmitter is calibrated such that an input from 0 to 385.54 inwc would yield an output of 4 to 20 mAdc (monitored as 1.000 Vdc to 5.000 Vdc across a precision test resistor). To facilitate calibration, the transmitter inputs are rounded down to a whole inwc. The following equation is used to compute the required transmitter output (Vdc) for a given differential pressure (DP) input (inwc):

$$E_o = \left(\frac{4.000\ \text{Vdc}}{385.54\ \text{inwc}}\right) DP + 1.000\ \text{Vdc}$$

Per Section 6.6.9 of this calculation, the As Found Tolerance (AFT) of the transmitter is ±0.81% Span. Per Section 6.6.10 of this calculation, the As Left Tolerance (ALT) of the transmitter is ±0.50% Span. The AFT and ALT are converted to voltage units with the following equations:

$$\text{AFT(Vdc)} = \pm 4\ \text{Vdc}\left(\frac{\text{AFT(\% Span)}}{100}\right) = \pm 0.032\ \text{Vdc}$$

$$\text{ALT(Vdc)} = \pm 4\ \text{Vdc}\left(\frac{\text{ALT(\% Span)}}{100}\right) = \pm 0.020\ \text{Vdc}$$

The calibration table for transmitter FT-434 is as follows:

Required Input (inwc)	Desired Output (Vdc)	As Found Tolerance (Vdc)	As Left Tolerance (Vdc)
0	1.000	0.968 to 1.032	0.980 to 1.020
95	1.986	1.954 to 2.018	1.966 to 2.006
190	2.971	2.939 to 3.003	2.951 to 2.991
290	4.009	3.977 to 4.041	3.989 to 4.029
385	4.994	4.962 to 5.026	4.974 to 5.014

Transmitter Calibration Table

FT-435

Per Reference 4.6.4 and Assumption 5.15, the differential pressure (DP) associated with 120% flow for FT-435 is 407.50 inwc.

The transmitter is calibrated such that an input from 0 to 407.50 inwc would yield an output of 4 to 20 mAdc (monitored as 1.000 Vdc to 5.000 Vdc across a precision test resistor). To facilitate calibration, the transmitter inputs are rounded down to a whole inwc. The following equation is used to compute the required transmitter output (Vdc) for a given differential pressure (DP) input (inwc):

$$E_o = \left(\frac{4.000\ \text{Vdc}}{407.50\ \text{inwc}}\right) DP + 1.000\ \text{Vdc}$$

Per Section 6.6.9 of this calculation, the As Found Tolerance (AFT) of the transmitter is ±0.81% Span. Per Section 6.6.10 of this calculation, the As Left Tolerance (ALT) of the transmitter is ±0.50% Span. The AFT and ALT are converted to voltage units with the following equations:

$$\text{AFT(Vdc)} = \pm 4\ \text{Vdc}\left(\frac{\text{AFT(\% Span)}}{100}\right) = \pm 0.032\ \text{Vdc}$$

$$\text{ALT(Vdc)} = \pm 4\ \text{Vdc}\left(\frac{\text{ALT(\% Span)}}{100}\right) = \pm 0.020\ \text{Vdc}$$

The calibration table for transmitter FT-435 is as follows:

Required Input (inwc)	Desired Output (Vdc)	As Found Tolerance (Vdc)	As Left Tolerance (Vdc)
0	1.000	0.968 to 1.032	0.980 to 1.020
100	1.982	1.950 to 2.014	1.962 to 2.002
200	2.963	2.931 to 2.995	2.943 to 2.983
305	3.994	3.962 to 4.026	3.974 to 4.014
407	4.995	4.963 to 5.027	4.975 to 5.015

Transmitter Calibration Table

FT-436

Per Reference 4.6.4 and Assumption 5.15, the differential pressure (DP) associated with 120% flow for FT-436 is 393.10 inwc.

The transmitter is calibrated such that an input from 0 to 393.10 inwc would yield an output of 4 to 20 mAdc (monitored as 1.000 Vdc to 5.000 Vdc across a precision test resistor). To facilitate calibration, the transmitter inputs are rounded down to a whole inwc. The following equation is used to compute the required transmitter output (Vdc) for a given differential pressure (DP) input (inwc):

$$E_o = \left(\frac{4.000\ \text{Vdc}}{393.10\ \text{inwc}}\right) DP + 1.000\ \text{Vdc}$$

Per Section 6.6.9 of this calculation, the As Found Tolerance (AFT) of the transmitter is ±0.81% Span. Per Section 6.6.10 of this calculation, the As Left Tolerance (ALT) of the transmitter is ±0.50% Span. The AFT and ALT are converted to voltage units with the following equations:

$$\text{AFT(Vdc)} = \pm 4\ \text{Vdc}\left(\frac{\text{AFT(\% Span)}}{100}\right) = \pm 0.032\ \text{Vdc}$$

$$\text{ALT(Vdc)} = \pm 4\ \text{Vdc}\left(\frac{\text{ALT(\% Span)}}{100}\right) = \pm 0.020\ \text{Vdc}$$

The calibration table for transmitter FT-436 is as follows:

Required Input (inwc)	Desired Output (Vdc)	As Found Tolerance (Vdc)	As Left Tolerance (Vdc)
0	1.000	0.968 to 1.032	0.980 to 1.020
100	2.018	1.986 to 2.050	1.998 to 2.038
195	2.984	2.952 to 3.016	2.964 to 3.004
295	4.002	3.970 to 4.034	3.982 to 4.022
392	4.989	4.957 to 5.021	4.969 to 5.009

Transmitter Calibration Table

9.2 ISOLATOR MODULE (FM-414, 415, 416, 424, 425, 426, 434, 435, AND 436)

The isolator transfer function is as follows:

$$E_O = E_I$$

Per Section 6.8.8 of this calculation, the As Found Tolerance (AFT) of the isolator is ±1.20% Span. Per Section 6.8.9 of this calculation, the As Left Tolerance (ALT) of the isolator is ±0.50% Span. The AFT and ALT are converted to voltage units with the following equations:

$$\text{AFT(Vdc)} = \pm 4\ \text{Vdc}\left(\frac{\text{AFT(\% Span)}}{100}\right) = \pm 0.048\ \text{Vdc}$$

$$\text{ALT(Vdc)} = \pm 4\ \text{Vdc}\left(\frac{\text{ALT(\% Span)}}{100}\right) = \pm 0.020\ \text{Vdc}$$

The calibration table for the isolator is as follows:

Required Input (Vdc)	Desired Output (Vdc)	As Found Tolerance (Vdc)	As Left Tolerance (Vdc)
1.000	1.000	0.952 to 1.048	0.980 to 1.020
2.000	2.000	1.952 to 2.048	1.980 to 2.020
3.000	3.000	2.952 to 3.048	2.980 to 3.020
4.000	4.000	3.952 to 4.048	3.980 to 4.020
5.000	5.000	4.952 to 5.048	4.980 to 5.020

Isolator Calibration Table

9.3 COMPARATOR MODULE (FC-414, 415, 416, 424, 425, 426, 434, 435, AND 436)

Each comparator provides a Low RCS Flow Reactor Trip. Per Section 8.0 of this calculation, the Low RCS Flow Reactor Trip setpoint is 94.68% Flow Span decreasing. The comparator receives a differential pressure input. Therefore, the setpoint must be converted from % Flow Span to % ΔP Span with the following equation (Design Input 5.11):

$$\text{Setpoint}(\%\,\Delta P\,\text{Span}) = 100\%\,\Delta P\,\text{Span}\left(\frac{\text{Setpoint}(\%\,\text{Flow Span})}{120\%\,\text{Flow Span}}\right)^2$$

The following equation is used to compute the voltage representation of the comparator setpoint:

$$\text{Setpoint}(\text{Vdc}) = 4\ \text{Vdc}\left(\frac{\text{Setpoint}(\%\,\Delta P\,\text{Span})}{100\%\,\Delta P\,\text{Span}}\right) + 1.000\ \text{Vdc}$$

Therefore, the setpoint expressed in voltage units is 3.490 Vdc (94.68% Flow Span).

Per Section 6.7.8 of this calculation, the As Found Tolerance (AFT) of the comparator is ±1.41% Span. Per Section 6.7.9 of this calculation, the As Left Tolerance (ALT) of the comparator is ±0.50% Span. The AFT and ALT are converted to voltage units with the following equations:

$$\text{AFT}(\text{Vdc}) = \pm 4\ \text{Vdc}\left(\frac{\text{AFT}(\%\,\text{Span})}{100}\right) = \pm 0.056\ \text{Vdc}$$

$$\text{ALT}(\text{Vdc}) = \pm 4\ \text{Vdc}\left(\frac{\text{ALT}(\%\,\text{Span})}{100}\right) = \pm 0.020\ \text{Vdc}$$

The following table provides calibration values for the comparators:

Setpoint (% Flow Span)	Setpoint (Vdc)	As Found Tolerance (Vdc)	As Left Tolerance (Vdc)
94.68	3.490	3.434 to 3.546	3.470 to 3.510

Comparator Calibration Table

9.4 INDICATOR (FI-414, 415, 416, 424, 425, 426, 434, 435, AND 436)

The indicators are scaled to provide an output of 0 to 120% Flow (0 to 100% Flow Span) for a 1 to 5 Vdc input. The indicators receive a differential pressure signal which is converted to a flow indication utilizing a square root scale. Therefore, the transfer function for the indicator is as follows:

$$I_O = 120\%\ \text{Flow Span}\sqrt{\frac{E_I - 1.000\ \text{Vdc}}{4\ \text{Vdc}}}$$

Per Section 6.9.9 of this calculation, the As Found Tolerance (AFT) of the indicator is ±2.44% Span. Per Section 6.9.10 of this calculation, the As Left Tolerance (ALT) of the indicator is ±2.00% Span. The AFT and ALT are converted to pressure units with the following equations:

$$\text{AFT(Vdc)} = \pm 4\ \text{Vdc}\left(\frac{\text{AFT(\% Span)}}{100}\right) = \pm 0.098\ \text{Vdc}$$

$$\text{ALT(Vdc)} = \pm 4\ \text{Vdc}\left(\frac{\text{ALT(\% Span)}}{100}\right) = \pm 0.080\ \text{Vdc}$$

The following table provides calibration values for the indicators:

Desired Input (Vdc)	Required Output (% Flow)	As Found Tolerance (Vdc)	As Left Tolerance (Vdc)
1.000	0	0.902 to 1.098	0.920 to 1.080
2.000	60	1.902 to 2.098	1.920 to 2.080
3.000	85	2.902 to 3.098	2.920 to 3.080
4.000	104	3.902 to 4.098	3.920 to 4.080
5.000	120	4.902 to 5.098	4.920 to 5.080

Indicator Calibration Table

ATTACHMENT A
CALCULATION MATRIX REFERENCE TABLE

Calculation No. RNP-I/INST-1128
Page 1 of 1
Revision No. 5

Document Type (e.g. CALC, DWG, TAG, PROCEDURE, SOFTWARE)	ID Number (e.g., Calc No., Dwg. No., Equip. Tag No., Procedure No., Software name and version)	Function (i.e. IN for design inputs or references; OUT for affected documents)	Relationship to Calc. (e.g. design input, assumption basis, reference, document affected by results)	Action (specify if Doc. Services or Config. Mgt. to Add, Deleted or Retain) (e.g., CM Add, DS Delete)
Calculations	RNP-E-1.005	IN	Design Input	CM Add
Calculations	RNP-M/MECH-1651	IN	Design Input	CM Add
Drawing	5379-3485	IN	Design Input	CM Add
Drawing	5379-3486	IN	Design Input	CM Add
Drawing	5379-3513	IN	Design Input	CM Add
Drawing	5379-3514	IN	Design Input	CM Add
Drawing	5379-3524	IN	Design Input	CM Add
Drawing	5379-3525	IN	Design Input	CM Add
Drawing	5379-3526	IN	Design Input	CM Add
Drawing	HBR2-11133	IN	Design Input	CM Add
Drawing	HBR2-11260	IN	Design Input	CM Add
Other Documents	728-012-10	IN	Design Input	CM Add
Other Documents	728-399-88	IN	Design Input	CM Add
Other Documents	728-589-13	IN	Design Input	CM Add
Other Documents	R82-226/01	IN	Design Input	CM Add
Other Documents	RNP-F/NFSA-0029	IN	Design Input	CM Add
Other Documents	Technical Specifications	IN	Design Input	CM Add
Other Documents	UFSAR	IN	Design Input	CM Add
Procedures	EGR-NGGC-0153	IN	Reference	CM Add
Procedures	LP-060	IN	Design Input	CM Add
Procedures	LP-061	IN	Design Input	CM Add
Procedures	LP-062	IN	Design Input	CM Add
Procedures	LP-063	IN	Design Input	CM Add
Procedures	LP-064	IN	Design Input	CM Add
Procedures	LP-065	IN	Design Input	CM Add
Procedures	LP-066	IN	Design Input	CM Add
Procedures	LP-067	IN	Design Input	CM Add
Procedures	LP-068	IN	Design Input	CM Add
Procedures	MMM-006	IN	Design Input	CM Add
Procedures	TMM-026	IN	Design Input	CM Add
Procedures	EST-047	IN	Design Input	CM Add
Procedures	OST-020	IN	Design Input	CM Add

ATTACHMENT B
COMPARATOR DRIFT

Calculation No. RNP-I/INST-1128
Page 1 of 1
Revision No. 5

CALIBRATION DATA SHEET REVIEW SUMMARY

HAGAN MODEL 118 SINGLE COMPARATOR							
TC-141		LC-949		PC-145A		TC-143	
Cal. Dt.	Devia.	Cal. Dt.	Devia.	Cal. Dt.	Devia.	Cal. Dt.	Devia.
7/14/84		9/26/84		5/29/84			
			.001				
	.001	9/25/85			.000	6/26/85	
			.001				.008
6/04/86		9/24/86		2/23/86		2/02/86	
	.001		.002		.004		.001
5/15/87		9/28/87		4/30/87		1/27/87	
	.003		.002		.009		.003
6/13/88		9/30/88		12/29/88		2/3/88	
	.003						.004
11/20/89			.001		.009	7/4/89	
		2/26/90		9/22/90			

HAGAN MODEL 118 DUAL COMPARATOR								
	LC-106A		LC-106B		LC-108A		LC-108B	
Cal.Dt.	Devia.	Devia.	Devia.	Devia.	Devia.	Devia.	Devia.	Devia.
6/14/84								
	.000	.000	.001	.004	.000	.000	.000	.000
4/01/85								
	.001	.000	.001	.001	.001	.000	N/A	N/A
4/18/86								
	.001	.001	.001	.000	.001	.000	N/A	N/A
3/03/87								
	.001	.003	.001	.001	.000	.001	N/A	N/A
4/06/88								
	.000	.001	.002	.000	.002	.001	N/A	N/A
4/04/89								
	.000	.000	*	*	*	*	.003	.003
4/04/90								

* Instrument Malfunction
N/A Not Available

Maximum deviation noted between the as-found and as-left values recorded on the available calibration data sheets was .009 vdc.

This value is approximately equal to 0.25%.

ATTACHMENT C
ROSEMOUNT DRIFT

ROSEMOUNT

Rosemount Inc.
12001 Technology Drive
Eden Prairie, MN 55344
Tel (612) 941-4580
Telex 4310012
Fax (612) 828-3088

September 20, 1990

Entergy Operations
Grand Gulf Nuclear Plant
ESC Building
P.O. Box 429
Port Gibson, MS 39150

Attention: Bob McCain

Dear Mr. McCain:

Rosemount has developed a new drift specification for the Model 1152, 1153 and 1154 pressure transmitters. The specification is ±.2% URL over a 30 month period.

In addition, all normal performance specs (i.e. accuracy) can be considered 3 sigma specs. The nuclear specs such as LOCA/HELB, radiation, and seismic were developed based on type testing. Due to the small sample size of test units, it is difficult to apply statistical methodology to these type of specs.

If you have any further questions please feel free to call me at (612) 828-3100.

Sincerely,

Neil P. Lien
Marketing Engineer

NPL:lbc

Enc: PDS 2302, 2388, 2514, 2235
Report D8600063

c: Les Callender #2

ATTACHMENT D
INTERNATIONAL INSTRUMENTS INDICATOR DATA

operating companies
General Resistance
International Instruments
Transducers & Systems
Shunts Meters
E.L.C.S.

PRIME TECHNOLOGY

PRIME TECHNOLOGY, INC. • Twin Lakes Road • P.O. Box 185 • North Branford, CT 06471

Tel. (203) 481-5721
TWX: 710-453-3082
FAX: (203) 481-8837

June 24, 1991

CAROLINA POWER & LIGHT
P.O. Box 1551
Raleigh, NC 27602-1551

Attn: Robert Mann OHS 6th Floor

Dear Robert,

Per our conversation the drift and T.C. for International Instruments model 2520 are 1% of span per year and .1% of span per degree C respectively. The accuracy following a seismic event are per Mil Standards for shock and vibration and are quoted as ±5% of span. Understand that the assumption is made that the seismic event reflects both shock and vibration.

Should you have any further information, please do not hesitate to contact me.

Best Regards,

James L. Jamieson
Executive Vice President

cc: Keith Macdowall

ATTACHMENT E
ELBOW TAP FLOW COEFFICIENT UNCERTAINTY

Calculation No. RNP-I/INST-1128
Page 1 of 1
Revision No. 5

$(p_o + p_i)/2 \cong p_L$, may be applied to equation (I-S-153) to give

$$p_o - p_i = \Delta p = \frac{D}{R} \rho V_L^2 \qquad \text{(I-S-154)}$$

I-S-56 Equation (I-S-154) is an approximate theoretical equation for the measurement of fluid flow with an elbow and is applicable to any cross section that is symmetric with respect to the center-line plane. The theoretical rate of flow is

$$q_T = AV_L = A\sqrt{\frac{R}{D}\frac{\Delta p}{\rho}} \qquad \text{(I-S-155)}$$

Introducing a flow coefficient, K, determined by a calibration, and using the customary units of measurement (namely, A, in.^{2}; D and R, in.; p_L and Δp, psi; and ρ, lb$_m$/ft^3) gives as the equation for computing the rate of flow

$$q = 0.47268\, A\, K\sqrt{\frac{R}{D}\frac{\Delta p}{\rho}} \qquad \text{(I-S-156)}$$

cfs at the fluid density, ρ

or

$$q = 0.37125\, K\, D\, \sqrt{D\, R\, \Delta p/\rho} \quad \text{cfs} \qquad \text{(I-S-157)}$$

and

$$m = 0.37125\, K\, D\, \sqrt{D\, R\, \rho\, \Delta p} \quad \text{lb}_m\text{/sec} \qquad \text{(I-S-158)}$$

I-S-57 Unlike the three principal differential pressure meters, elbow meters have not been the object of tests and structural recommendations by a committee of the ASME or other technical societies. However, a review of published experimental data on elbow meters indicated that the relative roughness of the elbow surface had no significant effect on flow measurements. Also, for 90-deg elbows with pressure taps at 45 deg and tap hole diameters, δ, as recommended for orifice meters, the value of K may be computed by

$$K = 1 - \frac{6.5}{\sqrt{R_D}} \qquad \text{(I-S-159)}$$

when $10^4 \le R_D \le 10^6$, and $R/D \ge 1.25$. Flows computed with this value of K and uncalibrated elbows will be subject to a tolerance (uncertainty) of about ± 4 per cent. With a calibrated elbow, the tolerance should be comparable to that for other types of differential pressure meters. With either calibrated or uncalibrated elbows meters, a high degree of repeatability is attainable [34, 35].

I-S-58 The use of the scroll case of a turbine or pump and the guide-vane speed ring of a turbine may be classed as forms of centrifugal meters. In order to use either of these as a means of flow measurement, a calibration must be made using some other method of measurement, such as a tracer method. (See Chapter I-I-9 and [36].)

I-S-59 Linear-Resistance Meters. With these meters, the outstanding characteristic is the linear relationship between the pressure drop and the flow rate from zero flow up to some maximum rate. Because of this linear relationship, these meters have the same flow coefficient over this range; and, within this range, the determination of this coefficient at one rate is sufficient. Above this linear maximum rate, the pressure drop begins to increase very gradually at a faster rate than the flow. Hence, when calibrating one of these meters, enough different rates should be covered to determine the upper limit of linearity. If the meter is to be used above this point, the relation between rate of flow and pressure drop should be determined.

The two most common forms of primary elements are capillary tubes and porous plugs, as illustrated in Fig. I-S-16. With the capillary tube, the ratio of length to bore is the principal factor determining the relationship between rate of flow and pressure drop. Some writers recommend that the length should be 150 or more times the bore. A second factor is the character of the entrance and exit ends of the tube, i.e., whether these are square or smooth and well tapered [37]. Instead of a single tube, a bundle of capillary passages may be used to increase the flow capacity. Also, it is not necessary for the passage to be of circular cross section or even of a uniform shape [38].

The porous-plug form can be made by fastening a plug of suitable porous material within a section of pipe or tubing and providing connections for measuring the pressure drop across the plug. Some of the materials which may be satisfactory for the plug are steel wool, cotton waste, sintered alumina, glass wool, and layers of fine screening so placed that the wires of adjacent layers are not parallel. The first two are suited to use with dry gases; the sintered alumina could be used at elevated temperatures; and the last two could be used with wet gases or even liquids. With any given plug material, the principal factors influencing the rate-pressure drop relation are the tightness with which the material is packed and the length of the plug [39].