Draft Submittal

OCONEE JUNE 2004 EXAM
50-26912004-301,
50-27012004-301, &
50-28712004-301
JUNE 14 - 18 & 25,2004

1. Reactor Operator Operator Written Exam

OCONEE

Initial Exam

June 25, 2004

RO WRITTEN

NR

RO EXAM

Tier / Group	Randomly Selected K/A	Reason for Rejection
T1/G1	029EK3.04 (9)	ONS does not isolate the normal charging header when emergency borating for an ATWS.
T1/G2	032AA1.01 (21)	Selected new KA. At ONS operators do not select alternate power supplies for the Source Range Nuclear Instrumentation. This would be performed by I&E. On the new KA the question will be written concerning overlap with Wide-range NIs instead of Intermediate-range NIs. ONS no longer has Intermediate-range NIs.
T1/G2	068AK3.14 (23)	ONS does not have a Safety injection setpoint for main steam line pressure.
T1/G2	068AK3.12 (23)	Could not write a discriminating question on this KA. Sequence of actions contained in the Control Evacuation AP is not sianificant.
T2/G I	008A4.09 (33)	Replace KA. ONS does not have a CCWS temperature control valve.
T2/G1	064A3.04 (45)	ONS does not have Emergency Diesels and the K/A (number of starts available with an air compressor) does not translate well to our hydro units.
T2/G1	026K4.06 (52)	ONS does not have Recirculation spray system.
T2/G I	103K4.01 (52)	ONS does not have vacuum breakers associated with the containment.
T2/G2	028K2.01 (56)	ONS no longer has Hydrogen recombiners
T2/G2	055G2.2.22 (61)	ONS has no limiting conditions or safety limit associated with condenser air removal.
T2/G2	027A2.01 (65)	ONS does not have an Iodine Removal System
P3	G2.2.23 (71)	SRO only KA.
T3	G2.4.26 (75)	At ONS Reactor Operators are not qualified to serve on the fire brigade.

RO EXAM

Q #	KA	Answer	Level	Source	Attachment
1	008AK3.05	B	2	NEW	
2	09EG2.1.28	D	2	NEW	
3	011EA2.05	A	2	NEW	
4	015AK2.10	A	2	NEW	
5	022AA2.03	B	2	SS044702	
6	025AG2.1.32	A	2	TA060601	
7	026AA2.03	A	2	PNS021701	
8	027AK1.01	D	2	PNS142201	
9	*029EK3.11	C	2	EAP111003	
10	038EK1.02	B	2	EAP090602	
11	040AK2.02	D	2	NEW	
12	054AK1.01	C	2	EAP081401 (m)	
13	055EK3.02	C	1	EAP230501	
14	057AA2.12	A	2	PNS143503	
15	058AA1.03	A	2	EL020406	
16	BE10EA2.1	B	2	NEW	
17	BE05EA1.3	A	2	NEW	
18	BE04EA1.1	B	2	NEW	
19	001AG2.4.31	D	1	NEW	
20	005AG2.4.6	C	2	NEW	
21	*032AA2.04	A	1	NEW	
22	067AK3.04	A	1	16040606	
23	**068AK3.12	D	1	NEW	
24	069AG2.1.2	e	1	SSS041402	
25	076AA1.04	A	1	NEW	

Q #	KA	Answer	Level	Source	Attachment
26	BE13EK1.2	A	2	EAP130422	
27	BE14EK2.1	C	2	NEW	
28	003K2.02	A		NEW	
29	004A1.08	D		NEW	
30	005A4.01	A		EAP181201	
31	006K6.01	D		EAP064002	
32	007A1.03	D	2	NEW	
33	*008A4.07	A	1	NEW	
34	010K5.01	C	2	PNS140501	
35	012K1.08	D	2	IC090301	
36	013K4.02			IC031302 (M)	
37	022A3.01		1	NEW	
38	026A2.07	D	2	NEW	
39	039G2.1.28	C	1	STG160403	
40	056G2.1.33	A	1	NEW	
41	059A1.03	D	1	NEW	
42	061K5.03	B	1	NEW	
43	062K3.02	B	2	EL041301	Drawing
44	063A4.01			EL010501	
45	*064A3.07			EL050503	
	073GG2.1.33	D	1	NEW	
	076A2.02	C	2	SSS050801	
48	078K4.03	A	1	NEW	
49	103K3.03	C	1	NEW	
50	073A4.02	D	1	RAD012501	

Q #	KA	Answer	Level	Source	Attachment
51				TA040501	
52				NEW	
53	007K1.01	B	2	NEW	
54	005K2.03	D	1	NEW	
55	062A3.01	A	2	EL070404	
56	*029K4.03	A	1	NEW	
57	033K1.05	C	2	NEW	
58	035K4.06	C	2	STG121002	
59	041K6.03	C	2	NEW	
60	045A2.17	C	2	EAP050201	
61	*056G2.1.32	B	1	STG050601 (M)	
62	068K5.03	B	2	NEW	
63	002K1.04	C	1	CP081001	
64	014K3.02	A	2	NEW	
65	*016K3.02	A	2	IC081301	
66	*G2.1.11	B	1	PNS081201	
67	62.1.27	C	1	EL009	
68	G2.1.21	D	1	NEW	
69	G2.2.13	D	1	NEW060906	
70	G.2.2.1	C	1	NEW	
71	*G2.2.30	D	1	FH043701	
72	G2.3.4	D	1		
73	G2.3.1	B	2	ONS NRC 2002	
74	G2.4.46	B	1	IC084102	
75	G2.4.26	A	2	EAP191401	

Tier Ⅰ Group 1

Name/Safety Function	K1	K2	K3	A1	A2	G	KA	Question Type	K/A Topic(s)	RO	SRO
Reactor Trip - Stabilization - Recovery / 1	0	0	0	0	0	0	007EA2.06	Ability to determine and interpret the following as they apply to (EMERGENCY PLANT EVOLUTION):(CFR: 41.10 / 43.5 / 45.13)	K/A Randomly Rejected	4.3	4.5
Pressurizer Vapor Space Accident / 3	0	0	1	0	0	0	008AK3.05	Knowledge of the reasons for the following responses as they apply to (ABNORMAL PLANT EVOLUTION):(CFR: 41.5 / 41.10 / 45.6 / 45.13)	ECCS termination or throttling criteria	4	4.5
Small Break LOCA / 3	0	0	0	0	0	1	009EG2.1.28	This is a Generic, no stem statement is associated.	Knowledge of the purpose and function of major system components and controls.	3.2	3.3
Large Break LOCA / 3	0	0	0	0	1	0	011EA2.05	Ability to determine and interpret the following as they apply to (EMERGENCY PLANT EVOLUTION):(CFR: 41.10 / 43.5 / 45.13)	Significance of charging pump operation	3.3	3.7
RCP Malfunctions / 4	0	1	0	0	0	0	015AK2.10	Knowledge of the interrelations between (ABNORMAL PLANT EVOLUTION) and the following:(CFR: 41.7 / 45.7 / 45.8)	RCP indicators and controls	2.8	2.8
Loss of Rx Coolant Makeup / 2	0	0	0	0	1	0	022AA2.03	Ability to determine and interpret the following as they apply to ABNORMAL PLANT EVOLUTION):(CFR: 41.10 / 43.5 / 45.13)	Failures of flow control valve or controller	3.1	3.6
Loss of RHR System / 4	0	0	0	0	0	1	025AG2.1.32	This is a Generic, no stem statement is associated.	Ability to explain and apply all system limits and precautions.	3.4	3.8
Loss of Component Cooling Water / 8	0	0	0	0	1	0	026AA2.03	Ability to determine and interpret the following as they apply to ABNORMAL PLANT EVOLUTION):(CFR: 41.10 / 43.5 / 45.13)	The valve lineups necessary to restart the CCWS while bypassing the portion of the system causing the abnormal condition	2.6	2.9

RO

Tier 1 Group 1

Name/Safety Function	K1	K2	K3	A1	A2	G	KA	Question Type	K/A Topic(s)	RO	SRO
Pressurizer Pressure Control System Malfunction / 3	1	0	0	0	0	0	027AK1.01 8	Knowledge of the operational implications of the following concepts as they apply to the (ABNORMAL PLANT EVOLUTION):(CFR: 41.8 to 41.10 / 45.3)	Definition of saturation temperature	3.1	3.4
ATWS / 1	0	0	1	0	0	0	029EK3.04 9	Knowledge of the reasons for the following responses as they apply to (EMERGENCYPLANT EVOLUTION):(CFR: 41.5 / 41.10 / 45.6 / 45.13)	Closing the normal charging header isolation valves	3.1	3.1
Steam Gen. Tube Rupture / 3	1	0	0	0	0	0	038EK1.02 10	Knowledge of the operational implications of the following concepts as they apply to the EMERGENCY PLANT EVOLUTION):(CFR: 41.8 to 41.10 / 45.3)	Leak rate vs. pressure drop	3.2	3.5
Steam Line Rupture - Excessive Heat Transfer / 4	0	1	0	0	0	0	040AK2.02 11	Knowledge of the interrelations between (ABNORMAL PLANT EVOLUTION) and the following:(CFR: 41.7 / 45.7 / 45.8)	Sensors and detectors	2.6	2.6
Loss of Main Feedwater / 4	1	0	0	0	0	0	054AK1.01 12	Knowledge of the operational implications of the following concepts as they apply to the (ABNORMAL PLANT EVOLUTION):(CFR: 41.8 to 41.10 / 45.3)	MFW line break depressurizes the S/G (similar to a steam line break)	4.1	4.3
Station Blackout / 6	0	0	1	0	0	0	055EK3.02 13	Knowledge of the reasons for the following responses as they apply to (EMERGENCY PLANT EVOLUTION):(CFR: 41.5 / 41.10 / 45.6 / 45.13)	Actions contained in EOP for loss of offsite and onsite power	4.3	4.6
Loss of Off-site Power 6	0	0	0	0	0	0	056AA1.24	Ability to operate and / or monitor the following as they apply to (ABNORMAL PLANT EVOLUTION):(CFR: 41.7 / 45.5 / 45.6)	K/A Randomly Rejected	2.9	3

RO

Tier 1 Group 1

Name/Safety Function	K1	K2	K3	A1	A2	G	KA	Question Type	K/A Topic(s)	RO	SRO
Loss of Vital AC Inst. Bus / 6	0	0	0	0	1	0	057AA2.12 14	Ability to determine and interpret the following as they apply to ABNORMAL PLANT EVOLUTION):(CFR: 41.10 / 43.5 / 45.13)	PZR level controller, instrumentation and heater indications	3.5	3.7
Loss of DC Power / 6	0	0	0	1	0	0	058AA1.03 15	Ability to operate and / or monitor the following as they apply to (ABNORMAL PLANT EVOLUTION):(CFR: 41.7 / 45.5 / 45.6)	Vital and battery bus components	3.1	3.3
Loss of Nuclear Svc Water / 4	0	0	0	0	0	0	062AK2	Knowledge of the interrelations between (ABNORMAL PLANT EVOLUTION) and the following:(CFR: 41.7 / 45.7 / 45.8)	K/A Randomly Rejected	0	0
Loss of Instrument Air / 8	0	0	0	0	0	0	065AK3.08	Knowledge of the reasons for the following responses as they apply to (ABNORMAL PLANT EVOLUTION):(CFR: 41.5 / 41.10 / 45.6 / 45.13)	K/A Randomly Rejected	3.7	3.9
Reactor Trip - Stabilization - Recovery / 1	0	0	0	0	0	0	BE02EG2.1.2	This is a Generic, no stem statement is associated.	K/A Randomly Rejected	3	4
Reactor Trip - Stabilization - Recovery / 1	0	0	0	0	1	0	BE10EA2.1	Ability to determine and interpret the following as they apply to (EMERGENCY PLANT EVOLUTION):(CFR: 41.10 / 43.5 / 45.13)	Facility conditions and selection of appropriate procedures during abnormal and emergency operations.	2.5	4
Steam Line Rupture - Excessive Heat Transfer / 4	0	0	0	1	0	0	BE05EA1.3	Ability to operate and / or monitor the following as they apply to (EMERGENCY PLANT EVOLUTION):(CFR: 41.7 / 45.5 / 45.6)	Desired operating results during abnormal and emergency situations.	3.8	4.2
Inadequate Heat Transfer - Loss of Secondary Heat Sink / 4	0	0	0	1	0	0	BE04EA1.1	Ability to operate and / or monitor the following as they apply to (EMERGENCY PLANT EVOLUTION):(CFR: 41.7 / 45.5 / 45.6)	Components, and functions of control and safety systems, including instrumentation, signals, interlocks, failure modes, and automatic and	4.4	4.2

RO

Tier 1 Group 1

Name/Safety Function	K1	K2	K3	A1	A2	G	KA	Question Type	K/A Topic(s)	RO	SRO
									manual features.		

Tier 1 Group 2

RO

Name / Safety Function	K1	K2	K3	A1	A2	G	KA	Question Type	K/A Topic(s)	RO	SRO
Continuous Rod Withdr	0	0	0	0	0	1	001AG2.4.31 19	This is a Generic, no stem statement is associated.	Knowledge of annunciators alarms and indications and use of the response instructions.	3.3	3.4
Dropped Control Rod /	0	0	0	0	0	0	003AK3.05	Knowledge of the reasons for the following responses as they apply to (ABNORMAL PLANT EVOLUTION):(CFR: 41.5 / 41.10 / 45.6 / 45.13)	K/A Randomly Rejected	3.4	4.1
Inoperable/Stuck Contr	0	0	0	0	0	1	005AG2.4.6 20	This is a Generic, no stem statement is associated.	Knowledge symptom based EOP mitigation strategies.	3.1	4
Emergency Boration / 1	0	0	0	0	0	0	024AK2.01	Knowledge of the interrelations between (ABNORMAL PLANT EVOLUTION) and the following:(CFR: 41.7 / 45.7 / 45.8)	K/A Randomly Rejected	2.7	2.7
Pressurizer Level Malfu	0	0	0	0	0	0	028AK2.03	Knowledge of the interrelations between (ABNORMAL PLANT EVOLUTION) and the following:(CFR: 41.7 / 45.7 / 45.8)	K/A Randomly Rejected	2.6	2.9
Loss of Source Range I	0	0	0	1	0	0	032AA1.01 21	Ability to operate and / or monitor the following as they apply to (ABNORMAL PLANT EVOLUTION):(CFR: 41.7 / 45.5 / 45.6)	Manual restoration of power	3.1	3.4
Loss of Intermediate Ra	0	0	0	0	0	0	033AA1.02	Ability to operate and / or monitor the following as they apply to (ABNORMAL PLANT EVOLUTION):(CFR: 41.7 / 45.5 / 45.6)	K/A Randomly Rejected	[illegible]	3.1
Fuel Handling Accident	0	0	0	0	0	0	036AA1.04	Ability to operate and / or monitor the following as they apply to (ABNORMAL PLANT EVOLUTION):(CFR: 41.7 / 45.5 / 45.6)	K/A Randomly Rejected	.1	3.7

Tier 1 Group 2

RO

Name / Safety Function	K1	K2	K3	A1	A2	G	KA	Question Type	K/A Topic(s)	RO	SRO
Steam Generator Tube	0	0	0	0	0	0	037AK3.02	Knowledge of the reasons for the following responses as they apply to (ABNORMAL PLANT EVOLUTION):(CFR: 41.5 / 41.10 / 45.6 / 45.13)	K/A Randomly Rejected	3.[illegible]	3.5
Loss of Condenser Vac	0	0	0	0	0	0	051AG2.4.6	This is a Generic, no stem statement is associated.	K/A Randomly Rejected	3.[illegible]	4
Accidental Liquid RadW	0	0	0	0	0	0	059AK2.01	Knowledge of the interrelations between (ABNORMAL PLANT EVOLUTION) and the following:(CFR: 41.7 / 45.7 / 45.8)	K/A Randomly Rejected	2.7	2.8
Accidental Gaseous Ra	0	0	0	0	0	0	060AK1.02	Knowledge of the operational implications of the following concepts as they apply to the (ABNORMAL PLANT EVOLUTION):(CFR: 41.8 to 41.10 / 45.3)	K/A Randomly Rejected	2.5	3.1
ARM System Alarms / 7	0	0	0	0	0	0	061AA2.06	Ability to determine and interpret the following as they apply to ABNORMAL PLANT EVOLUTION):(CFR: 41.10 / 43.5 / 45.13)	K/A Randomly Rejected	3.2	4.1
Plant Fire On-site / 9 8	0	0	1	0	0	0	067AK3.04 22	Knowledge of the reasons for the following responses as they apply to (ABNORMAL PLANT EVOLUTION):(CFR: 41.5 / 41.10 / 45.6 / 45.13)	Actions contained in EOP for plant fire on site	3.3	4.1
Control Room Evac. / 8	0	0	1	0	0	0	068AK3.14 33	Knowledge of the reasons for the following responses as they apply to (ABNORMAL PLANT EVOLUTION):(CFR: 41.5 / 41.10 / 45.6 / 45.13)	Safety injection setpoint of main steam line pressure	3.2	3.4
Loss of CTMT Integrity.	0	0	0	0	0	1	069AG2.1.2 24	This is a Generic, no stem statement is associated.	Knowledge of operator responsibilities during all modes of plant operation.	[illegible]	[illegible]

RO

Tier 1 Group 2

Name / Safety Function	K1	K2	K3	A1	A2	G	KA	Question Type	K/A Topic(s)	RO	SRO
Inad. Core Cooling / 4	0	0	0	0	0	0	074EK3.05	Knowledge of the reasons for the following responses as they apply to (EMERGENCY PLANT EVOLUTION):(CFR: 41.5 / 41.10 / 45.6 / 45.13)	K/A Randomly Rejected	4.2	4.5
High Reactor Coolant A	0	0	0	1	0	0	078AA1.04 076 ?5	Ability to operate and / or monitor the following as they apply to (ABNORMAL PLANT EVOLUTION):(CFR: 41.7 / 45.5 / 45.6)	Failed fuel-monitoring equipment	3.2	3.4
Plant Runback / 1	0	0	0	0	0	0	BA01AA2.1	Ability to determine and interpret the following as they apply to ABNORMAL PLANT EVOLUTION):(CFR: 41.10 / 43.5 / 45.13)	K/A Randomly Rejected	3	3.7
Loss of NNI-X/Y / 7	0	0	0	0	0	0	BA02AG2.4.6	This is a Generic, no stem statement is associated.	K/A Randomly Rejected	3.1	4
Turbine Trip / 4	0	0	0	0	0	0	BA04AK3.1	Knowledge of the reasons for the following responses as they apply to (ABNORMAL PLANT EVOLUTION):(CFR: 41.5 / 41.10 / 45.6 / 45.13)	K/A Randomly Rejected	3.2	3.2
Emergency Diesel Actu	0	0	0	0	0	0	BE06EA1.1	Ability to operate and / or monitor the following as they apply to (EMERGENCY PLANT EVOLUTION):(CFR: 41.7 / 45.5 / 45.6)	K/A Randomly Rejected	4.2	4.2
Flooding / 8	0	0	0	0	0	0	BA07AK3.4	Knowledge of the reasons for the following responses as they apply to (ABNORMAL PLANT EVOLUTION):(CFR: 41.5 / 41.10 / 45.6 / 45.13)	K/A Randomly Rejected	3.6	3.6
Inadequate Subcooling	0	0	0	0	0	0	BE03EK1.2	Knowledge of the operational implications of the following concepts as they apply to the EMERGENCY PLANT EVOLUTION):(CFR:	K/A Randomly Rejected	3.8	4

Tier 1 Group 2

RO

Name / Safety Function	K1	K2	K3	A1	A2	G	KA	Question Type	K/A Topic(s)	RO	SRO
								41.8 to 41.10 / 45.3)			
LOCA Cooldown - Depi	0	0	0	0	0	0	BE08EA1.2	Ability to operate and / or monitor the following as they apply to (EMERGENCY PLANT EVOLUTION):(CFR: 41.7 / 45.5 / 45.6)	K/A Randomly Rejected	3.1	3.1
Natural Circ. / 4	0	0	0	0	0	0	BE09EK1.1	Knowledge of the operational implications of the following concepts as they apply to the EMERGENCY PLANT EVOLUTION):(CFR: 41.8 to 41.10 / 45.3)	K/A Randomly Rejected	3.5	3.7
EOP Rules and Enclosi	1	0	0	0	0	0	BE13EK1.2 26	Knowledge of the operational implications of the following concepts as they apply to the EMERGENCY PLANT EVOLUTION):(CFR: 41.8 to 41.10 / 45.3)	Normal, abnormal and emergency operating procedures associated with (EOP Rules).	3	3.8
Loss of NNI-X/Y/Z/	0	0	0	0	0	0	BA03AA1.1	Ability to operate and / or monitor the following as they apply to (ABNORMAL PLANT EVOLUTION):(CFR: 41.7 / 45.5 / 45.6)	K/A Randomly Rejected	4	4
EOP Rules and Enclosi	0	1	0	0	0	0	BE14EK2.1 27	Knowledge of the interrelations between (EMERGENCY PLANT EVOLUTION) and the following:(CFR: 41.7 / 45.7 / 45.8)	Components, and functions of control and safety systems, including instrumentation, signals, interlocks, failure modes, and automatic and manual features.	3.6	3.4
Control Room Evac. / 8	0	0	0	0	0	0	BA06AA1.2	Ability to operate and / or monitor the following as they apply to (ABNORMAL PLANT EVOLUTION):(CFR: 41.7 / 45.5 / 45.6)	K/A Randomly Rejected	3.2	3.5
Fuel Handling Accident	0	0	0	0	0	0	BA08AK2.2	Knowledge of the interrelations between (ABNORMAL PLANT EVOLUTION) and the following:(CFR: 41.7 / 45.7 / 45.8)	K/A Randomly Rejected	3.8	4

RO

Tier 1'Group 2

Name / Safety Function	K1	K2	K3	A1	A2	G	KA	Question Type	K/A Topic(s)	RO	SRO

A0

Tier 2 Group 1

Name / Safety Functio	K1	K2	K3	K4	K5	K6	A1	A2	A3	A4	G	Question Type	K/A Topic(s)	KA	RO	SRO
Reactor Coolant Pump	0	1	0	0	0	0	0	0	0	0	0	Knowledge of electrical power supplies to the following:(CFR: 41.7)	CCW pumps	003K2.02 28	2.6	2.6
Chemical and Volume Control	0	0	0	a	0	0	1	0	0	0	0	Ability to predict and/or monitor changes in parameters associated with operating the (SYSTEM)controls including:(CFR: 41.6 / 45.5)	Normal operating band for letdown flow rate	004A1.08 29	2.7	2.9
Residual Heat Removal	0	0	0	0	0	0	0	0	0	1	0	Ability to manually operate and/or monitor in the control room:(CFR: 41.7 / 45.5 to 45.8)	Controls and indication for RHR pumps	005A4.01 30	3.6	3.4
Emergency Core Cooling	0	0	0	0	0	1	0	0	0	0	0	Knowledge of the effect that a loss or malfunction of the following will have on the (SYSTEM):(CFR: 41.7 / 45.7)	BIT/borated water sources	006K5.01 31 806	3.4	3.9
Pressurizer Relief/Quench Tank	0	0	0	0	0	0	1	0	0	0	0	Ability to predict and/or monitor changes in parameters associated with operating the (SYSTEM) controls including:(CFR: 41.5 / 45.5)	Monitoring quench tank temperature	007A1.03 32	2.6	2.7
Component Cooling Water	0	0	0	0	0	0	0	0	0	1	0	Ability to manually operate and/or monitor in the control room:(CFR: 41.7 / 45.5 to 45.8)	CCW temperature control valve	008A4.09 33	3.0	2.9
Pressurizer Pressure Control	0	0	0	0	1	0	0	0	0	0	0	Knowledge of the operational implications of the following concepts as they apply to the (SYSTEM):(CFR: 41.5 / 45.7)	Determination of condition of fluid in PZR, using steam tables	010K5.01 34	3.5	4.0
Reactor Protection	1	0	0	0	0	0	0	0	0	0	0	Knowledge of the physical connections and/or cause-effect relationships between (SYSTEM) and the following:(CFR: 41.2 to 41.9 / 45.7 to 45.8)	MFW	012K1.08 35	2.9	3.1

Pier 2 Group 1

Name / Safety Functio	K1	K2	K3	K4	K5	K6	A1	A2	A3	A4	G	Question Type	K/A Topic(s)	KA	RO	SRO
Engineered Safety Features Actuation	0	0	0	1	0	0	0	0	0	0	0	Knowledge of (SYSTEM) design feature(s) and or interlock(s) which provide for the following:(CFR: 41.7)	Containment integrity system reset	013K4.02	3.9	4.2
Containment Cooling	0	0	0	0	0	0	0	0	1	0	0	Ability to monitor automatic operations of the (SYSTEM) including:(CFR: 41.7 / 45.5)	Initiation of safeguards mode of operation	022A3.01	4.1	4.3
Ice Condenser	0	0	0	0	0	0	0	0	0	0	0		K/A Rejected	026K5.01	0	0
Containment Spray	0	0	0	0	0	0	0	1	0	0	0	Ability to (a) predict the impacts of the following on the (SYSTEM) and (b) based on those predictions, use procedures to correct, control, or mitigate the consequences of those abnormal operation:(CFR: 41.5 / 43.5 / 45.3 / 45.13)	Loss of containment spray pump suction when in recirculation mode, possibly caused by clogged sump screen, pump inlet high temperature exceeded cavitation, voiding) or sump level below cutoff (interlock) limit	026A2.07	3.6	3.9
Main and Reheat Steam	0	0	0	0	0	0	0	0	0	0	1	This is a Generic, no stem statement is associated.	Knowledge of the purpose and function of major system components and controls.	039G2.1.28	3.2	3.3
Condensate	0	0	0	0	0	0	0	0	0	0	1	This is a Generic, no stem statement is associated.	Ability to recognize indications for system operating parameters which are entry-level conditions for technical specifications.	056G2.1.33	3.4	4.0
Main Feedwater	0	0	0	0	0	0	1	0	0	0	0	Ability to predict and/or monitor changes in parameters associated with operating the (SYSTEM) controls including:(CFR: 41.5 / 45.5)	Power level restrictions for operation of MFW pumps and valves.	059A1.03	2.7	2.9
Auxiliary/Emergency	0	0	0	0	1	0	0	0	0	0	0	Knowledge of the operational	Pump head effects when control valve is	061K5.03	2.8	2.9

RO

Tier 2 Group 1

Name / Safety Functio	K1	K2	K3	K4	K5	K6	A1	A2	A3	A4	G	Question Type	K/A Topic(s)	KA	RO	SRO
Feedwater												Implications of the following concepts as they apply to the (SYSTEM):(CFR: 41.5 / 45.7)	shut			
AC Electrical Distribution	0	0	1	0	0	0	0	0	0	0	0	Knowledge of the effect that a loss or malfunction of the (SYSTEM) will have on the following:(CFR: 41.7 / 45.6)	ED/G	082K3.02 062K3	4.1	4.4
DC Electrical Distribution	0	0	0	0	0	0	0	0	0	1	0	Ability to manually operate and/or monitor in the control room:(CFR: 41.7 / 45.5 to 45.8)	Major breakers and control power fuses	063A4.01 [illegible]	2.8	3.1
Emergency Diesel Generator	0	0	0	0	0	0	0	0	1	0	0	Ability to monitor automatic operations of the (SYSTEM) including:(CFR: 41.7 / 45.5)	Number of starts available with an air compressor	064A3.04 [illegible]	3.1	3.5
Process Radiation Monitoring	0	0	0	0	0	0	0	0	0	0	1	This is a Generic, no stem statement is associated.	Ability to recognize indications for system operating parameters which are entry-level conditions for technical specifications.	073GG2.1.33 [illegible]	3.4	4.0
Service Water	0	0	0	0	0	0	0	1	0	0	0	Ability to (a) predict the impacts of the following on the (SYSTEM) and (b) based on those predictions, use procedures to correct, control, or mitigate the consequences of those abnormal operation:(CFR: 41.5 / 43.5 / 45.3 / 45.13)	Service water header pressure	076A2.02 076	2.7	3.1
Instrument Air	0	0	0	1	0	0	0	0	0	0	0	Knowledge of (SYSTEM) design feature(s) and or interlock(s) which provide for the following:(CFR: 41.7)	Securing of SAS upon loss of cooling water	078K4.03 [illegible]	3.1	3.3
Containment	0	0	1	0	0	0	0	0	0	0	0	Knowledge of the effect that a loss or malfunction of the (SYSTEM) will have	Loss of containment integrity under refueling operations.	103K3.03 [illegible]	3.7	4.1

Tier 2 Group 1

RO

Name / Safety Functio	K1	K2	K3	K4	K5	K6	A1	A2	A3	A4	G	Question Type	K/A Topic(s)	KA	RO	SRO
												on the following:(CFR: 41.7 / 45.6)				
Process Radiation Monitoring	0	0	0	0	0	0	0	0	0	1	0	Ability to manually operate and/or monitor in the control room:(CFR: 41.7 / 45.5 to 45.8)	Radiation monitoring system control panel	073A4.02 50	3.7	3.7
Containment Spray	0	0	1	0	0	0	0	0	0	0	0	Knowledge of the effect that a loss or malfunction of the (SYSTEM) will have on the following:(CFR: 41.7 / 45.6)	Recirculation spray system	026K3.02 51	4.2	4.3
Containment	0	0	0	1	0	0	0	0	0	0	0	Knowledge of (SYSTEM) design feature(s) and or interlock(s) which provide for the following:(CFR: 41.7)	Vacuum breaker protection	103K4.01 52	3.0	3.7
Pressurizer Relief/Quench Tank	1	0	0	0	0	0	0	0	0	0	0	Knowledge of the physical connections and/or cause-effect relationships between (SYSTEM) and the following:(CFR: 41.2 to 41.9 / 45.7 to 45.8)	Containment system	007K1.01 53	2.9	3.1
Residual Heat Removal	0	1	0	0	0	0	0	0	0	0	0	Knowledge of electrical power supplies to the following:(CFR: 41.7)	RCS pressure boundary motor-operated valves	005K2.03 54	2.7	2.8
AC Electrical Distribution	0	0	0	0	0	0	0	0	1	0	0	Ability to monitor automatic operations of the (SYSTEM) including:(CFR: 41.7 / 45.5)	Vital ac bus amperage	062A3.01 55	3.0	3.1

Tier 2 Group 2

Name / Safety Functio	K1	K2	K3	K4	K5	K6	A1	A2	A3	A4	G	Question Type	K/A Topic(s)	KA	RO	SRO
Hydrogen Recombiner and Purge Control	0	1	0	0	0	0	0	0	0	0	0	Knowledge of electrical power supplies to the following:(CFR: 41.7)	Hydrogen recombiners	028K2.01 50	2.5	2.8
Containment Purge	0	0	0	0	0	0	0	0	0	0	0	Ability to (a) predict the impacts of the following on the (SYSTEM) and (b) based on those predictions, use procedures to correct, control, or mitigate the consequences of those abnormal operation:(CFR: 41.5 / 43.5 / 45.3 / 45.13)	K/A Randomly Rejected	029A2.03	2.7	3.1
Spent Fuel Pool Cooling	1	0	0	0	0	0	0	0	0	0	0	Knowledge of the physical connections and/or cause-effect relationships between (SYSTEM) and the following:(CFR: 41.2 to 41.9 / 45.7 to 45.8)	RWST	033K1.05 57	2.7	2.8
Fuel Handling Equipment	0	0	0	0	0	0	0	0	0	0	0	Ability to (a) predict the impacts of the following on the (SYSTEM) and (b) based on those predictions, use procedures to correct, control, or mitigate the consequences of those abnormal operation:(CFR: 41.5 / 43.5 / 45.3 / 45.13)	K/A Randomly Rejected	034A2.01	3.6	4.4
Steam Generator	0	0	0	1	0	0	0	0	0	0	0	Knowledge of (SYSTEM) design feature(s) and or interlock(s) which provide for the following:(CFR: 41.7)	Amount of reserve water in S/G 035	035K4.05 58	2.9	3.2
Steam Pump/Turbine Bypass Control	0	0	0	0	0	1	0	0	0	0	0	Knowledge of the effect that a loss or malfunction of the following will have on the (SYSTEM):(CFR: 41.7 / 45.7)	Controller and positioners, including ICS, S/G, CRDS	041K6.03 59	2.7	2.9
Main Turbine Generator	0	0	0	0	0	0	0	1	0	0	0	Ability to (a) predict the impacts of the following on the (SYSTEM) and (b) based on those predictions, use	Malfunction of electrohydraulic control	045A2.17 60	2.7	2.9

RO

Tier 2 Group 2

Name / Safety Functio	K1	K2	K3	K4	K5	K6	A1	A2	A3	A4	G	Question Type	K/A Topic(s)	KA	RO	SRO
												procedures to correct, control, or mitigate the consequences of those abnormal operation:(CFR: 41.5 / 43.5 / 45.3 / 45.13)				
Condenser Air Removal	0	0	0	0	0	0	0	0	0	0	1	This is a Generic, no stem statement is associated.	Knowledge of limiting conditions for operations and safety limits.	055G2.2.22 5561	3.4	4.1
Liquid Radwaste	0	0	0	0	1	0	0	0	0	0	0	Knowledge of the operational implications of the following concepts as they apply to the (SYSTEM):(CFR: 41.5 / 45.7)	Units of radiation, dose and dose rate	068K5.03 62	2.6	2.8
Waste Gas Disposal	0	0	0	0	0	0	0	0	0	0	0	Knowledge of (SYSTEM) design feature(s) and or interlock(s) which provide for the following:(CFR: 41.7)	K/A Randomly Rejected	071K4.01	2.8	3.0
Area Radiation Monitoring	0	0	0	0	0	0	0	0	0	0	0	Ability to (a) predict the impacts of the following on the (SYSTEM) and (b) based on those predictions, use procedures to correct, control, or mitigate the consequences of those abnormal operation:(CFR: 41.5 / 43.5 / 45.3 / 45.13)	K/A Randomly Rejected	072A2.02	2.8	2.9
Circulating Water	0	0	0	0	0	0	0	0	0	0	0	Ability to predict and/or monitor changes in parameters associated with operating the (SYSTEM) controls including:(CFR: 41.5 / 45.5)	K/A Randomly Rejected	075A1	0	0
Station Air	0	0	0	0	0	0	0	0	0	0	0	Knowledge of the physical connections and/or cause-effect relationships between (SYSTEM) and the following:(CFR: 41.2 to 41.9 / 45.7 to 45.8)	K/A Randomly Rejected	078K1.01	3.0	3.1

Tier 2 Group 2

Name / Safety Functio	K1	K2	K3	K4	K5	K6	A1	A			G	Question Type	K/A Topic(s)	KA	RO	SRO
Fire Protection	0	0	0	0	0	0	0				0	Ability to monitor automatic operations of the (SYSTEM) including:(CFR: 41.7 / 45.5)	K/A Randomly Rejected	086A3.03	2.9	3.3
Control Rod Drive	0	0	0	0	0	0	0	0	0	0	0	This is a Generic, no stem statement is associated.	K/A Randomly Rejected	001GG2.1.27	2.8	2.9
Reactor Coolant	1	0	0	0	0	0	0	0	0	0	0	Knowledge of the physical connections and/or cause-effect relationships between (SYSTEM) and the following:(CFR: 41.2 to 41.9 / 45.7 to 45.8)	RCS vent system	002K1.04 63	2.8	3.2
Pressurizer Level Control	0	0	0	0	0	0	0	0	0	0	0	This is a Generic, no stem statement is associated.	K/A Randomly Rejected	011GG2.4.31	3.3	3.4
Rod Position Indication	0	0	1	0	0	0	0	0	0	0	0	Knowledge of the effect that a loss or malfunction of the (SYSTEM) will have on the following:(CFR: 41.7 / 45.6)	Plant computer	014K3.02 GK	2.5	2.8
Nuclear Instrumentation	0	0	0	0	0	0	0	0	0	0	0	Knowledge of the effect that a loss or malfunction of the following will have on the (SYSTEM):(CFR: 41.7 / 45.7)	K/A Randomly Rejected	015K6.03	2.6	3.0
Non-nuclear Instrumentation	0	0	0	0	0	0	0	0	0	0	0	Ability to predict and/or monitor changes in parameters associated with operating the (SYSTEM) controls including:(CFR: 41.5 / 45.5)	K/A Randomly Rejected	016A1	0	0
In-core Temperature Monitor	0	0	0	0	0	0	0	0	0	0	0	This is a Generic, no stem statement is associated.	K/A Randomly Rejected	017GG2.1.30	3.9	3.4
Containment Iodine Removal	0	0	0	0	0	0	0	1	0	0	0	Ability to (a) predict the impacts of the following on the (SYSTEM) and (b)	High temperature in the filter system	027A2.01 65	3.0	3.3

RO

Tier 2 Group 2

Name / Safety Functio	K1	K2	K3	K4	K5	K6	A1	A2	A3	A4	G	Question Type	K/A Topic(s)	KA	RO	SRO
												based on those predictions, use procedures to correct, control, or mitigate the consequences of those abnormal operation:(CFR: 41.5 / 43.5 / 45.3 / 45.13)				

RO

Tier 3

Group	KA		Topic	RO	SRO
Conduct of Operations	G2.1.24	66	Ability to obtain and interpret station electrical and mechanical drawings.	2.8	3.1
Conduct of Operations	G2.1.27	67	Knowledge of system purpose and or function.	2.8	2.9
Conduct of Operations	G2.1.21	68	Ability to obtain and verify controlled procedure copy.	3.1	3.2
Equipment Control	G2.2.13	69	Knowledge of tagging and clearance procedures.	3.6	3.8
Equipment Control	G2.2.11	70	Knowledge of the process for controlling temporary changes.	2.5	3.4
Equipment Control	G2.2.23	71	Ability to track limiting conditions for operations.	2.6	3.8
Radiation Control	G2.3.4	72	Knowledge of radiation exposure limits and contamination control, including permissible lev	2.5	3.1
Radiation Control	G2.3.1	73	Knowledge of 10 CFR: 20 and related facility radiation control requirements.	2.6	3
Emergency Procedures/Plan	G2.4.46	74	Ability to verify that the alarms are consistent with the plant conditions.	3.5	3.6
Emergency Procedures/Plan	G2.4.26	75	Knowledge of facility protection requirements including fire brigade and portable fire fightin	2.9	3.3

1 POINT

Question 1

Unit 2 plant conditions:

INITIAL CONDITIONS:
- Reactor power = 100%
- A FDW transient occurs

CURRENT CONDITIONS:
- Reactor power = 0%
- Main Steam pressure = 1010 psig
- 2RC-66 (PORV) failed open
- 2RC-4 (FORV BLOCK) failed open
- SCM = 0°F

Which ONE of the following is correct concerning throttling HPI?

HPI should be throttled when _____ to prevent _____

A. Reactor power ≤ 1% and SCM > 0°F and Pzr level > 100" / opening the Pressurizer code safety valves

---- B. Reactor power ≤ 1% and SCM > 0°F and Pzr level > 100" / violating Reactor vessel P/T limits

C. SCM > 0°F and CETCs decreasing / opening the Pressurizer code safety valves

D. SCM > 0°F and CETCs decreasing / violating Reactor vessel P/T limits

Question **1**
T1/G1

008AK3.05 Pressurizer Vapor Space Accident
Knowledge of the reasons for the following responses as they apply to the Pressurizer Vapor Space Accident: ECCS termination or throttling criteria (4.0/4.5)

Answer: B

RULE 6 (HPI) gives guidance for *throttling HPI* when *HPI* Forced Cooling and when *NOT* in *HPI* Forced Cooling.

HPI Forced Cooling in Progress.!	***HPI Forced Cooling NOT in Progress:***
All the following conditions must exist: • *SCM > 0* • *CETCs* decreasing	***All*** the following conditions must exist: • *Rx power ≤ 1%* • *SCM > 0* • *Pzr level > 100" [180" acc]*

A. incorrect, first part correct. Second part incorrect. Although opening the Pressurizer code safety valves is not desired, throttling HPI is done to prevent violating Reactor vessel P/T limits.

B. Correct, per RULE 6 (HPI) HPI may be throttled. HPI is throttled to prevent violating Reactor vessel P/T limits.

C. Incorrect, first part incorrect. First part would be correct if in HPI F/C. Second part incorrect. Although opening the Pressurizer code safety valves is not desired, throttling HPI is done to prevent violating Reactor vessel P/T limits.

D. Incorrect, first part incorrect. First par6 would be correct **if** in HPI F/C. Second part is correct.

Technical Reference(s): **EOP RULE 6 (HPI)**

Proposed references to be provided to applicants during examination: **None**

Learning Objective: **EAP-UNPP, R12**

Question Source: **NEW**

Question History: Last NRC Exam _____

Question Cognitive Level: Memory or Fundamental Knowledge
Comprehension or Analysis

8. Explain why the operator should control feedwater to match Rx power production during an UNPP event until RCS temperature stabilizes, i.e. no heatup or overcooling. (R7)

9. State when an UNPP event is considered to be terminated. (R9)

10. Explain what section of the EOP is transferred to following a successful completion of the UNPP section and what this transfer is based on. (R13)

11. Given piant conditions, determine appropriate actions based on UNPP section of the EQP. (R10)

12. Explain the basis for cautions, notes and major steps in UNPP and Rule 1 (ATWS/UNPP). (R8)

13. **Given plant conditions, determine if HPI throttling requirements are met per Rule 6 (Throttling HPI). (R12)**

1 POINT

Question 2

Unit 3 plant conditions:

- Small Break LOCA occurs
- ES **1-6** actuates
- **All** HPI pumps operating
- HPI Flow Train " A = 0 gprn
- HPI Flow Train "B" = 420 gpm

Which ONE of the following is the correct operator action and why?

Open _____ to protect against the consequences of a break on the RCP _____

A. 3HP-409 (3HP-27 Bypass) / suction

B. 3HP-409 (3HP-27 Bypass) / discharge

C. 3HP-410 (3HP-26 Bypass) / suction

D. 3HP-410 (3HP-26 Bypass) / discharge

Question 2

T1/G1

009EG2.1.28, Small Break LOCA

Knowledge of the purpose and function of major system components and controls. (3.2/3.3)

7

Answer: D

A. Incorrect, first part incorrect. Would be correct for failure of the "B" header. . Second part incorrect, HP-409 & HP-410 are used to protect against a break on the RCP Discharge (where injection flow into that loop **is** assumed to flow out the break).

B. Incorrect, first part incorrect. Would be correct for failure of the "B" header. Second part correct.

C. Incorrect, first part correct. Second part incorrect. HP-409 & HP-410 are used *to* protect against a break on the RCP Discharge (where injection flow into that loop is assumed to flow out the break).

D. Correct, to protect against a break on the **RCP** Discharge (where injection flow into that loop is assumed to flow out the break), we utilize HP-409 & HP-410. If adequate Row is not available in each header, the Operator opens the associated header cross-over valve to provide flow down that header from the **HPI** Pump **A/B** discharge header. This gives injection in 3 of 4 nozzles.

Technical Reference(s):

Proposed references to be provided to applicants during examination: None

Learning Objective: **PNS-HPI, R28**

Question Source: **NEW**

Question History: Last NRC Exam _____

Question Cognitive Level: Memory or Fundamental Knowledge
Comprehension or Analysis

20. Explain quarter core cooling and how the use of HP-409/HP-410 can prevent it. (R28)

21. Briefly explain two reasons why suction to the HPI pumps might be supplied through LP-15 and LP-16. (R29)

22. Describe the purpose and method used to measure HPI System leakage. (R31)

23. Describe the purpose and method used to perform the HPI Full Flow Test. (R32)

24. Recognize that the HPI Full Flow Test requires operators with no other duties for the duration of the test, due to the potential for RCS inventory loss and local monitoring required. (R34)

25. Given a copy of PT/1, 2, 3/A/0600/010, RCS Leakage, determine if calculation is valid and correctly evaluate as required. (R33)

26. Concerning PT/*/A/0202/011, High Pressure Injection Pump Test, describe: (R45)

    26.1 The purpose of the test.

    26.2 The method of performing the test.

27. Given a completed copy of PT/*/A/0202/011, High Pressure Injection Pump Test, evaluate the data to ensure acceptance criteria is met. (846)

28. When given a copy of applicable portions of the High Pressure Injection System procedure, demonstrate an understanding of the procedure by locating the answer to specific questions on limits, cautions, notes, etc., within the procedure,-or, explain the basis or reason for Limits and Precautions specifically related to or affected by the duties and tasks of the operator. (R35)

29. Concerning the Unit 3 loss of HPIPs event, (R38)

    29.1 Specify what the two primary causes were for this event.

    29.2 Explain the missed opportunity by the control room team to detect the level inaccuracy and the corrective action taken as a result of this event.

30. Given a copy of OP/1,2,3/A/1102/020, Shift Turnover, discuss the minimum acceptable actions/observations that must be completed for an inspection of the HPI System. (R36)

31. Describe the reactivity management concerns associated with the HPI System. (R40)

32. Given a copy of ITS/SLC's, analyze a given set of plant conditions for applicable ITS/SLC LCO's. (R41)

33. Apply all ITS/SLC rules to determine applicable Conditions and Required Actions for a given set of plant conditions. (R42)

2. (Obj R27) Following a reset of ES channels 1&2 the switches for the A&B HPI pumps must be moved from their original (pre-ES) position in order for the operator to have positive control over them. The C HPI pump switch should be rotated to "OFF" in order to secure it following a reset of ES channels 1&2.

3. (Obj R28) Quarter Core Cooling and HP-409/HP-410

   a) Evaluation of Worst Case Small Break found a break on the discharge of the RCP to be Worst Case.

   b) Combined with a break on the RCP Discharge (where injection flow into that loop was assumed to flow out the break) a single failure occurs that prevents flow in the opposite side's injection header. This condition left only one of four injection nozzles providing cooling water to the core.

      - If a pipe break were to occur in an HPI line between the last check valve and the RCS, a flow limiting orifice in each of the four injection headers would limit the flow lost out the break and increase the flow supplied via the other line.

   c) At higher power levels there are a small range of break sines on the discharge of a RCP where flow through a single injection nozzle can not adequately cool the core. This means that there are certain combinations of power levels and break sizes on the RCP discharge where a single failure could result in insufficient flow.

   d) To protect against this scenario, we utilize HP-409 & HP-410. If adequate flow is not available in each header, the Operator opens the associated header cross-over valve to provide flow down that header from the HPI Pump A/B discharge header. This gives injection in 3 of 4 nozzles.

      - The ability to perform this alignment within 10 minutes of the accident initiation is assumed in accident analyses.

   e) These valves can be throttled to provide the desired flow. Valve switches and flow indications are located on UB1. HP-409, -410 may be required to be throttled to prevent pump runout, ensure adequate NPSH during piggyback, or maintain RCS temperature/pressure within subcooling limits.

   f) The Unit computer will give a "not closed" indication when HP-409 and HP-410 are not fully closed.

4. If either HP-24 or HP-25 fails to open, one of the 3 HPI pumps must be stopped.

1 POINT

Question 3

Unit 1 plant conditions:

- LOCA has occurred
- 1A HPI Header Flow = 925 gprn
- 1B HPI Header Flow = 460 gpm
- LPI FLOW TRAIN A = 2950 gpm
- LPI FLOW TRAIN B = 0 gprn
- EOP Encl. 5.12 (ECCS Suction Swap to RBES) in progress
- BWST Level = 11 feet

Which ONE of the following is correct?

HPI pumps will _____ because _____

A. be secured / they are NO longer needed to provide core coding.

B. be secured / they are causing LPI pump run out.

C. NOT be secured / they are still needed to provide core cooling.

D. NOT be secured / LPI flow **is** NOT adequate.

TALK with George
Oconee Cutback test when the
Pumps are placed in post back
mode

Question 3

T1/G1

11EA2.05, Large Break LOCA,
bility to determine or interpret the following as they apply to a Large Break
OCA Significance of charging pump operation. (3.3/3.7*)

Answer: A

A. Correct, EOP Encl. 5.12 (ECCS Suction Swap to RBES) will direct the stopping of all HPI pumps when BWST is ≤ 13 feet. Because LPI is injecting > 2850 gpm in one header LPI flow is adequate and HPI flow is no longer required.

B. Incorrect, first part correct. Second part is incorrect because HPI pumps are still taking suction form the BWST and not LPI pump discharge.

C. Incorrect, EOP Encl. 5.12 (ECCS Suction Swap to RBES) will direct the stopping of all HPI pumps when BWST is ≤ 13 feet. Because LPI is injecting > 2850 in one header LPI flow is adequate and HPI flow is no longer required.

D. Incorrect, EOP Encl. 5.12 (ECCS Suction Swap to RBES) will direct the stopping of all HPI pumps when BWST is ≤ 13 feet. Because LPI is injecting > 2850 in one header LPI flow is adequate

---

Technical Reference(s): EQP, Enclosure 5.12 (ECCS Suction Swap to RBES)

Proposed references to be provided to applicants during examination: None

Learning Objective: EAP-LQSCM, R21

Question Source: NEW

Question History: Last NRC Exam _____

Question Cognitive Level: Memory or Fundamental Knowledge
Comprehension or Analysis

ACTION/EXPECTED RESPONSE	RESPONSE NOT OBTAINED
1. Start both of the following: __ 1A LPI Pump __ 1B LPI Pump	
2. Verify either of the following exists: __ LPI FLOW **TRAIN A** plus LPI FLOW **TRAIN** B ≥ 3300 gpm __ Only one LPI header is operating, **AND** flow **in** that header is ≥ 2850 gpm	__ GO **TO** Step **4.**
3. ***GO* TO** Step 52.	
4. __ Verify **c three** HPI pumps operating.	Stop 1B HPI Pump.
5. __ Dispatch an operator to perform Encl 5.37 (Isolation **of** HPI Pump Recirc) without dressing out. (PS)	
6. __ Notify Control Room personnel **that** the 170 gpm/pump minimum HPI flow requirement is in effect.	

CAUTION

ECCS pump damage may occur if LPI pumps are operated below the following minimum flows:

- Any LPI pump operated **at** < 100 gpm for > 30 minutes
- Two LPI pumps operating in piggyback with **NO** LPI flow and total HPI flow < 500 gpm

7. __ Verify two LPI pumps operating.	__ **GO TO** Step 11.
8. __ Verify total HPI flow including **seal** injection is > 500 gpm	__ **IF** both of the following exist: __ **NO** flow on LPI FLOW **TRAIN A** __ **NO** flow on LPI FLOW **TRAIN** B **THEN** perform the following: **A.** __ Secure one LPI pump due to low flow conditions. B. __ **GO TO** Step 11.
9. Simultaneously open the following: __ 1LP-15 __ 1LP-16	__ Limit total HPI flow to < 750 gpm including seal injection.
10. __ **GO TO Step 14**	

THIS PAGE INTENTIONALLY BLANK

ACTION/EXPECTED RESPONSE	RESPONSE NOT OBTAINED
NOTE Total LPI flow = LPI header flow + HPI header flows + seal injection.	
11. __ Maximize total LPI flow < 3000 gpm by throttling HPI flow.	
12. __ Limit total HPI flow to < 750 gpm including seal injection.	
13. Simultaneously open the following: __ 1LP-15 __ 1LP-16	1. __ **IF** 1LP-15 fails to open, **THEN start** 1B LPI pump. 2. __ **IF** 1LP-16 **fails** to open, **THEN start** 1A LPI pump.
14. __ Place LDST LEVEL INTERLOCK switch in DISABIE.	
15. Position the following valve switches to close until valve travel **is** initiated: __ 1HP-23 __ 1HP-24 __ 1HP-25 (3)	__ Continue procedure.
16. Verify any of the following are open: __ 1LPSW-4 __ 1LPSW-5	__ ***GO* TO** Step 18.
17. __ **GO TO** Step 22.	
NOTE The DIXON LPSW flow indicators must be used when determining post accident flow readings.	
18. __ Verify **NEITHER** LPI cooler LPSW flow DIXON indicator is **blank.**	1. __ Consider LPI cooler with blank LPSW flow DIXON unavailable. 2. __ **S O TO** Step 22.
19. Verify the following are open: __ 1LP-15 __ 1LP-16	1. __ Consider LPI cooler associated with the closed piggyback valve unavailable. 2. __ ***GO* TO** Step 22.
20. __ Throttle 1LPSW-4 **for** 3000-3300 gpm flow to 1A LPI cooler.	__ ***GO*** TO Step 22.
21. __ Throttle ILPSW-5 **for** 3000-3300 gpm flow to 1B LPI cooler.	

THIS PAGE INTENTIONALLY BLANK

ACTION/EXPECTED RESPONSE	RESPONSE NOT OBTAINED
NOTE • An LPI pump secured due to **low flow** conditions is considered available. • The capability to align IC LPI **pump** is **NOT** considered available unless already in use.	
22. __ Verify both LPI coolers available for LPI and LPSW.	1. __ **IF** 1A LPI Cooler is available, **THEN** perform the following: **A.** __ Close ILPSW-5. B. __ Open ILPSW-4. C. __ Reduce total HPI flow to < 750 gpm including seal injection. D. __ **Close** ILP-16. 2. __ **IF** 1B LPI Cooler is available, **THEN** perform **the** following: **A.** __ Close ILPSW-4. **R.** __ Open ILPSW-5. C. __ Reduce total **HPI flow to** < 750 gpm including seal injection. D. __ Close ILP-15.
23. __ Verify any LPI pump has been secured in this enclosure due to low **flow** conditions,	__ **GO TO** Step 25.
24. __ **WHEN** BWST level is ≤ 10', **THEN** start any LPI pump previously stopped due to low **flow** conditions.	
NOTE RB level of ≥ 2' is expected when BWST level reaches 9'.	
25. __ **WHEN** BWST level is ≤ 9', **ANI)** RB level is rising, **THEN** continue in this enclosure. (4)	
26. Simultaneously open the following: __ ILP-19 __ ILP-20	1. __ **IF** ILP-19 fails to open, **THEN** stop the 1A RBS Pump. **2.** __ **IF** ILP-20 fails to open, **THEN** stop the 1B RBS Pump.

THIS PAGE INTENTIONALLY BLANK

ACTION/EXPECTED RESPONSE	RESPONSE NOT OBTAINED
27. __ **IAAT** BWST level **is** ≤ 6', **THEN** perfom Steps 28 - 32.	__ ***GO* TO** Step 32.
28. __ Verify ILP-19 open.	__ Stop 1A LPI Pump.
29. __ Verify 1LP-20 open.	__ Stop 1B LPI Pump.
30. Simultaneously close the following: __ 1LP-21 __ 1LP-22	__ **IF** 1LP-21 fails to close, **THEN** perform the following: __ Stop 1A LPI Pump. __ Stop 1A RBS Pump. __ **IF** 1LP-22 fails to close, **THEN** perform the following: __ Stop 1B LPI Pump. __ Stop 1B RBS Pump.
31. __ Dispatch an operator to close 1LP-28 (BWST OUTLET) (East of Unit 1 BWST).	
32. __ Verify two LPI pumps operating.	__ Maximize total LPI flow < 3000 gpm by throttling HPI flow. __ Limit total HPI flow to < 750 gpm including seal injection.
33. __ **IAAT** an operating LPI Pump (1A **OR** 1B) fails, **THEN** perform Steps 34 - **42.**	__ **GO TO** step 43.
34. __ Verify any LPI pump operating.	__ **IF** 1A ***or*** 1B LPI pump is available, **THEN** attempt to start the availabie LPI pump. __ **IF** any LPI **pump** is operating, **THEN GO TO** Step 35. __ ***GO* TO** Step 37.

IF AT ANY TIME:

(27) BWST **level is** ≤ 6'… **(transfer suction** to **only the** RB **sump)**

(33) an operating LPI **Pump** (1A **OR** 1B) **fails… (verify any** LPI **pump** operating **OR** start 1C LPI pump)

ACTION/EXPECTED RESPONSE	RESPONSE NOT OBTAINED
35. Open the following for the running LPI pump:	

✓	1A LPI Pump	✓	1B LPI Pump
	1LP-15		1LP-16
	1LP-17		1LP-18

36. ***GO* TO** Step 41	
37. Perform the following: **A.** __ Open 1LP-19. B. __ Open 1LP-6.	1. __ Open 1LP-20. 2. __ Open 1LP-7.
38. __ **WHEN** the following are open, **OR** throttled open: 1BS-1 __ 1BS-2 **THEN** continue procedure.	
39. Open the foliowing to align IC LPI **pump** to any header with LPSW aligned:	

✓	A LPI HDR	✓	B LPI HDR
	1LP-15		1LP-16
	1LP-9		1LP-10
	1LP-17		1LP-18

40. __ Start 1C LPI pump.	
41. __ Verify LPSW aligned to the in-service LPI train.	1. __ IF **A** LPI train in-service, **THEN** perform the following: **A.** __ Close 1LPSW-5. B. __ Open 1LPSW-4 2. __ **IF** B LPI train in-service, **THEN** perform the following: **A.** __Close 1LPSW-4. B. __ Open 1LPSW-5.

IF AT ANY TIME

(27) BWST level **is ≤ 6'... (transfer** suction to **only the RB sump)**

(33) **an** operating LPI Pump (1A **OR 1B) fails... (verify** any **LPI** pump **operating OR start 1C LPI** pump)

ACTION/EXPECTED RESPONSE	RESPONSE NOT OBTAINED
42. Perform the following: A. __ Maximize total LPI flow < 3000 gpm by throttling HPI flow. B. __ Limit total HPI flow to < 750 gpm including seal injection.	
43. Notify Chemistry to perform **the** following: __ Commence caustic addition. __ Periodically sample LPI discharge for boron concentration.	
44. __ **IAAT** the TSC is operational, **THEN** notify TSC to provide guidance on long term operation of LPI pumps.	
45. __ **WHEN** 1LP-28 is closed, **THEN** continue in this enclosure.	
46. __ Verify ILP-19 open.	***GO* TO** Step 50.
47. __ Verify 1A LPI Pump operating.	__ **IF** TSC approves restart, **THEN** perform the following: **A.** __ Start 1A LPI Pump. B. __ **GO TO** Step SO.
48. __ Verify ILP-20 open.	__ ***GO* TO** Step 50.
49. __ Verify 1B LPI Pump operating.	__ **IF** TSC approves restart, **THEN** start **IB** LPI Pump.
50. __ Initiate Encl 5.4 (Makeup to the BWST) to replenish inventory **for** subsequent use if needed.	
51. __ **WHEN** directed by CR SRO, **THEN EXIT** this enclosure.	

• • • END • • •

THIS PAGE INTENTIONALLY BLANK

AC	RESPONSE	OBTAINED
Unit Status LPI FLOW TRAIN A plus LPI FLOW TRAIN B 2 3300 gpm **OR** Only one LPI header in operation with header flow ≥ 2650 gpm.		
52. __ **WHEN** BWST level **is** ≤ 13', **THEN** stop all HPI pumps.		
NOTE RB level of ≥ 2' is expected when BWST level reaches 9'.		
53. __ **WHEN** BWST level ≤ 9', **AND** RB level is rising, THEN continue procedure.		
54. Simultaneously open the following: __ 1LP-19 __ 1LP-20 (4)	1. __ **IF** 1LP-19 fails to open, **THEN** stop the 1A RRS Pump. 2. __ **IF** 1LP-20 fails to open, **THEN** stop the 1B RBS Pump.	
55. __ **IAAT** BWST level is ≤ 6', **THEN** perform Steps 56 - 59.	__ **GO TO** Step 60.	
56. __ Verify 1LP-19 open.	__ Stop the 1A LPI Pump.	
57. __ Verify 1LP-20 open.	__ Stop the 1B LPI Pump.	
58. Simultaneously close the following: __ ILP-21 -- 1LP-22	1. __ **IF** IIP-21 fails **to** close, **THEN** perfom the following: __ Stop 1A LPI Pump. __ Stop 1A RBS Pump. 2. __ **IF** 1LP-22 fails to close, **THEN** perform the following: __ **Stop** 1B LPI Pump. __ Stop 1B RBS Pump.	
59. — Dispatch an operator to close LIP-28 (BWST OUTLET) (East of Unit 1 BWST).		

IF AT ANY TIME:

(55) **BWST** level is ≤ ***6'*... (transfer** suction **to only the** RB **sump)**

ACTION/RESPONSE	RESPONSE NOT OBTAINED
60. — IAAT an operating LPI Pump (1A OK 1B) fails, THEN perform Steps 61 - 68.	__ GO TO Step 69.
61. __ Verify any LPI pump operating.	__ GO TO Step 64
63. Open the following for the running LPI pump:	

✓	1A LPI Pump	✓	1B LPI Pump
	1LP-17		1LP-18

63. __ GO TO Step 68.	
64. Perform the following:	1. __ Open 1LP-20.
A. __ Open 1LP-19.	2. __ Open 1LP-7.
B. __ Open 1LP-6.	
65. — WHEN the following are open, OK throttled open: __ 1BS-1 __ 1BS-2 THEN continue procedure.	
66. Open the following to align 1C LPI pump to the desired header:	

✓	A LPI HDR	✓	B LPI HDR
	1LP-9		1LP-10
	1LP-17		1LP-18

67. __ Start 1C LPI pump.	
68. __ Verify LPSW aligned to the in-service LPI train.	1. __ IF A LPI train in-service, THEN perform the following: A. __ Close 1LPSW-5. B. __ Open 1LPSW-4 2. __ IF B LPI train in-service, THEN perform the following: A. __ Close 1LPSW-4. B. __ Open 1LPSW-5.

IF AT ANY TIME:

(55) BWST **level** is ≤ 6'... **(transfer** suction to only **the RB sump)**

(60) an operating LPI **Pump** (1A **OR** 1B) **fails** ... *(verify* **any LPI pump operating** QW start 1C LPI pump)

ACTION/EXPECTED RESPONSE	RESPONSE NOT OBTAINED
69. Notify Chemistry to perform the following: __ Commence caustic addition. __ Periodically sample LPI discharge for boron concentration.	
70. Verify any of the following are open: __ 1LPSW-4 __ 1LPSW-5	__ ***GO* TO *Step*** 72.
71. __ **GO TO** Step 75.	
72. __ Verify **NEITHER** LPI cooler LPSW flow DIXON is blank.	1. __ Consider LPI cooler with blank **LPSW** flow DIXON unavailable. 2. __ ***GO* TO** Step 75.
73. __ Throttle 1LPSW-4 for 3000-3300 gpm flow *to* the 1A LPI cooler.	__ ***GO* TO** Step 75.
44. — Throttle 1LPSW-5 for 3000-3300 gpm flow to the 1B LPI cooler.	

IF AT ANY TIME:

(55) BWST level is ≤ 6'... (transfer **suction** to **only the** RB **sump)**

(60) an operating LPI **Pump** (1A **OR** 1B) **fails** ... (verify any LPI **pump operating OR** start 1C LPI pump)

ACTION/EXPECTED RESPONSE	RESPONSE NOT OBTAINED
NOTE The capability to align 1C LPI pump is NOT considered available unless already in use.	
75. __ Verify both LPI coolers available for **LPI** and LPSW. [21]	1. __ **IF** 1A LPI Cooler is available, **THEN** perform the following: **A.** __ Close 1LPSW-5. B. __ Open 1LPSW-4. 2. __ **IF** 1B LPI Cooler is available, **THEN** perform the following: **A.** __ Close 1LPSW-4. B. __ Open 1LPSW-5.
76. __ **WHEN** 1LP-28 **is** closed, **THEN** continue in this enclosure.	
74. __ Verify 1LP-19 open.	__ ***GO* TO** Step 81.
78. __ Start 1A **LPI Pump.**	__ **GO TO** Step 81.
79. __ Verify 1LP-20 open.	__ **GO TO** Step **81.**
80. __ Start 1B **LPI Pump.**	
81. __ Initiate Encl 5.4 (**Makeup** to the BWST) to replenish inventory for subsequent use if needed.	
82. __ **WHEN** directed by CR SRO, **THEN EXIT** this enclosure.	

• • • END • • •

THIS PAGE INTENTIONALLY BLANK

Objs. R: 42, 43, 44, 45 Covered in **Rule 3** Training-

2. Explain how a single MDEFDWP is aligned to both SGs. **(R42)**

3. Explain why operation of the condensate system is preferred during extended EFDW operation. **(R43)**

4. Describe actions taken per enclosure 5.9, Extended EFDW Operation to maintain UST inventory. **(R44)**

5. Explain the actions required to establish suction source to the EFDW pumps from the Hotwell. **(R45)**

Objs. To Be Covered in **LOSCM** Tab and Encl. **5.12** Training

6. Recognize that, provided HPI/LPI is operating, subcooling margin should be restored within ~10 minutes unless a large break LOCA has occurred. **(R11)**

7. Given a set of plant conditions determine the correct actions to take using LOSCM (boss of Subcooling Margin) section of the EOP. **(R12)**

8. Explain why HPI piggyback operation may be required during SBLOCAs. **(R16)**

9. State when the LOSCM section should be entered. **(R1)**

10. Explain the reason for determining if the cause of LOSCM is due to over-cooling. **(R5)**

11. State the symptom in the EOP that is used to determine that SG heat removal will not be required during a LOCA. **(R10)**

12. Given a copy of Figure 1, Total Required HPI Flow, be able to determine, for a given set of conditions, whether a Rapid RCS Cooldown is required. **(R17)**

13. Describe the two (2) actions taken to cool and depressurize the RCS if total HPI flow is not adequate or if it cannot be established to each header. **(R18)**

14. Discuss the reasons for not attempting to depressurize the RCS to LPI conditions by opening the PORV when **SCM is lost** and HPI is not available. **(R19)**

15. Describe the basis for swapping LPI and RBS suction to the RBES when the BWST level decreases to 19 feet. **(R20)**

16. Given a set of system failure conditions, assess the situation and determine the correct contingency actions. **(R34)**

17. Describe the differences in actions taken to swap suction to the **RBES** between a **SBLOCA** and a **LBLQCA. (R21)**

18. Explain the actions taken to control HPIP recirc flow. **(R29)**

THIS PAGE INTENTIONALLY BLANK

Qbjs. R: 42, 43, 44, 45 Covered in Rule 3 Training-

2. Explain how a single MDEFDWP is aligned to both SGs. **(R42)**

3. Explain why operation of the condensate system is preferred during extended EFDW operation. **(R43)**

4. Describe actions taken per enclosure 5.9, Extended EFDW Operation to maintain UST inventory. **(R44)**

5. Explain the actions required to establish suction source to the EFDW pumps from the Hotwell. **(R45)**

Qbjs. To Be Covered in LOSCM Tab and Encl. 5.12 Training

6. Recognize that, provided HPI/LPI is operating, subcooling margin should be restored within –10 minutes unless a large break LOCA has occurred. **(R11)**

7. Given a set of plant conditions determine the correct actions to take using LOSCM (Loss of Subcooling Margin) section of the EOP. **(R12)**

8. Explain why HPI piggyback operation may be required during SBLOCAs. **(R16)**

9. State when the LQSCM section should be entered. **(R1)**

10. Explain the reason for determining if the cause of LBSCM is due to over-cooling. **(R5)**

11. State the symptom in the EOP that is used to determine that SG heat removal will **not** be required during a LOCA. **(R10)**

12. Given a copy of Figure 1, Total Required HPI Flow, be able to determine, for a given set of conditions, whether a Rapid RCS Cooldown is required. **(R17)**

13. Describe the two (2) actions taken to cool and depressurize the RCS id total HPI flow is not adequate or if it cannot be established to each header. **(R18)**

14. Discuss the reasons for not attempting to depressurize the RCS to LPI conditions by opening the PORV when SCM is lost and HPI is not available. **(R19)**

15. Describe the basis for swapping LPI and RBS suction to the RBES when the BWST level decreases to 19 feet. **(R20)**

16. Givers a set of system failure conditions, assess the situation and determine the correct contingency actions. **(R34)**

17. **Describe the differences in actions taken to swap suction to the RBES between a SBLQCA and a LBLOCA. (R21)**

18. Explain the actions taken to control HPIP recirc flow. (R29)

LBLOCA FLOWPATH

Transferred here by Step 2. LPI header flows meet LBLOCA criteria below:

Unit Status
LPI HFLOW TRAIN A plus LPI FLOW TRAIN B 5 3300 gpm
OR
Only one LPI header in operation with header flow ≥ 2850 gpm.

2.52 Step 52: __ WHEN BWST level is ≤ 13', THEN stop all HPI pumps.

A. *This **step** is used with larger LOCAs, LPI is already injecting and HPI injection is not needed.*

NOTE
RB level of ≥ 2' is expected when BWST level reaches 9'.
REFER to OC-EAP-LOSCM-09

2.53 Step 53: __ WHEN BWST level is ≤ 9', AND RB level is rising, THEN continue procedure.

A. *Hold step to wait for a BWST level of 9 feet and a rising Reactor Building level.*

1. *UFSAR guidance says that we begin the **swap** when the BWSP low Level alarm is received.*
2. *The alarm actuates at 9 feet*
3. *Guidance is given to comply with the UFSAR.*
4. *The requirement for the RB level increasing **ensures** fhat the water is going to fhe Reactor Building and is available for taking suction.*
5. *(OBJ. **R22**) Assures time is available to complete required valve manipulations prior to BWST depletion.*

B. *Wait here until conditions to continue are met*

2.54 Step 54: Simultaneously open *the* following:

__ 1LP-19

__ 1LP-20

RNO: 1. __ IF 1LP-19 fails to open, **THEN** stop *the* 1A RBS Pump

2. __ **IF** 1LP-20 fails to open, **THEN stop** the 1B RBS Pump

1 POINT

Question 4

Unit 1 plant conditions:

INITIAL CONDITIONS:

- Time = 0400:00
- Reactor power = 100%
- ICS in Automatic
- Reactor Coolant pump AMPS (KA)
  - 1A1 = .60
  - 1A2 = .58
  - 1B1 = .61
  - 1B2 = .60

CURRENT CONDITIONS:

- Time = 0400:01
- ICS in Automatic
- Reactor Coolant pump **AMPS** (KA)
  - 1A1 = .68
  - 1A2 = .58
  - 1B1 = .40
  - 1B2 = .61

Which ONE of the following is correct?

Reactor power will _____ and feedwater will _____

A. decrease / re-ratio

B. decrease / NOT re-ratio

C. stay the same / re-ratio

D. stay the same / NOT re-ratio

Question 4
T1/G1
015AK2.10, RCP Malfunctions,
Knowledge of the interrelations between the Reactor Coolant Pump Malfunctions (boss of RC Flow) and the following: RCP indicators and controls

Answer: A

A. Correct, 1B1 RCP has had a reduction in flow as indicated by the reduction in pumps amps. This will cause the ICS to reduce power at 20%/min to match the new RCS flow. Because the flow reduction was in only one RC loop the loop Tc will change. This will cause the ΔTc circuit to re-ratio feedwater to return the loop Tc to the same value.

B. Incorrect, first part correct. Second part incorrect because the flow reduction was in only one RC loop the loop Tc will change. This will cause the ΔTc circuit to re-ratio feedwater to return the loop Tc to the same value.

C. Incorrect, first part incorrect. It would be correct if the ICS only looked at RCP breaker position to determine the runback. Second part correct. Because the flow reduction was in only one RC loop the loop Tc will change. This will cause the ΔTc circuit to re-ratio feedwater to return the loop Tc to the same value.

D. Incorrect, first part incorrect. It would be correct if the ICS only looked at RCP breaker position to determine the runback. Second part incorrect because the flow reduction was in only one RC loop the loop Tc will change. This will cause the ΔTc circuit to re-ratio feedwater to return the loop Tc to the same value.

Technical Reference(s):

Proposed references to be provided to applicants during examination: None

Learning Objective: STG-ICS - R3, R15

Question Source: NEW

Question History: Last NRC Exam _____

Question Cognitive Level: Memory or Fundamental Knowledge
Comprehension or Analysis

OBJECTIVES

TERMINAL OBJECTIVE

1. Summarize the operational aspects of the Integrated Control System (ICS) with respect to the coordination of plant systems and controls. (T1)

2. Predict automatic actions performed by the ICS and identify corrective actions upon failure of the automatic actions. (T2)

3. Summarize the purpose and operation of the ICS indications and controls available to the operator. (T3)

ENABLING OBJECTIVES

1. Define the functions of the Core Thermal power Demand (CTPD) subsystem. (R1)

2. Given a set of conditions, determine the method to achieve a load change using the Load Control Panel (LCP) (R2)

3. Identify the operations of automatic and manual load limits including: (R3)

   3.1 LCP indications

   3.2 Load Limit values

   3.3 Runback Rates

   3.4 Over-riding conditions

4. Given a load limit condition, assess plant runback response and determine the source of any failure. (R4)

5. Define the purpose and operation of the HOLD push-button. (R5)

6. Identify the operation of the TRACKING mode including: (R6)

   6.1 Initiating conditions

   6.2 Tracking Parameters

   6.3 Operator interface

7. Describe the ICS response to a load change in the Integrated mode. (R7)

8. Describe the conditions and responses of the Integrated Master in maintaining turbine header pressure control. (R8)

9. Identify the conditions that would shift the Turbine Master to "hand" and those exceptions that would defeat the shift. (R9)

10. Identify the functions of the Turbine Bypass Valves in terns of the following: (R10)

    10.1 Setpoint control

    10.2 Setpoint bias application

    10.3 Independent overpressure protection

    10.4 Control interlocks

11. Describe the operation and limitations of the Turbine Load and Unload circuit. (R11)

12. List the inputs that affect total FDW demand and identify when each is utilized. (R12)

13. Identify the conditions that will remove the control deadband from Tave error to the feedwater subsystem. (R13)

14. Explain why feedwater temperature modification to feedwater demand is necessary and the effects it has on plant efficiency. (R14)

15. **Describe how loop feedwater demands are generated and the factors (Loop Tcold ratio and RC Flow ratio) which affect the balance between the two demand signals. (R15)**

16. List the conditions that block the temperature initiated delta Tc modification. (R16)

17. Identify the purpose and operation of the SG high and low level limits circuits including actuating conditions and Operator over-ride capabilities. (R17)

18. Given a set of conditions, identify the position response of the following: (R18)

    18.1 Main FDW Control Valves

    18.2 Main FDW Block Valves

    18.3 Startup Control Valves

19. Explain how a feedwater mnback is accomplished in the FDW subsystem if some or all of the control stations are in hand. (R19)

20. Describe how ICS feedwater pump speed signal is processed from FDW loop demands and valve differential pressure. (R20)

21. Explain how the FDW valve delta P auctioneering circuitry can prevent a unit transient for any single delta P signal failure. (R21)

2) If the "A" loop Tc became hotter and the "B" loop Tc became colder, the ΔTc circuit would modify the multiplies to a value higher than .5 which would increase the " A loop FDW flow.

(a) This increase in "A loop demand will be subtracted from the "B" loop demand which will lower "B" loop FDW flow.

(b) This type of correction would correct the ΔTc error while maintaining the total FDW flow constant.

b) Modification of FDW Load Ratio (Tc control)

- There are two types of modification of the load ratio ICS utilizes.
  - → ΔTc Control
  - → RC Flow Ratio

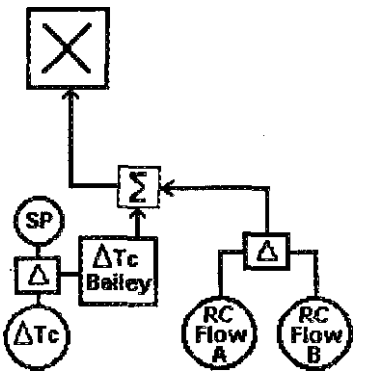

1) ΔTc Control

(a) Modification through a hand/auto (H/A) station (labeled 'load ratio control") which gives the operator the means of establishing a manual load ratio.

(1) Manual = toggle switch varies loop demands while maintaining total deedwater demand.

(2) Auto = Controller maintains loop demands based on measured Tc differences between steam generators as compared to a desired setpoint on the controller. (± 10 degree range)

(b) Proportional and Integral action is utilized to correct Tc problems that are indicated by an actual temperature difference in the two measured Tc's.

- The proportional change is utilized for fairly large Tc errors that could result from unit transients.
- The integral action is usually a result of changes in SG conditions and is a slow change over a long term period.

(c) Both the proportional and integral actions are blocked if:

(1) Either loop master H/A station in manual

(2) ΔTc control station (Load Ratio Control) is in manual.

(3) Either controlling FDW valve is in manual.

(4) Either generator on level control.

2) The second type of load ratio control modification is a circuit that anticipates Tc errors based upon measured RC flow (loss of RCP).

(a) If a RCP were lost, that loops RC flow would decrease which would result in a large decrease in that loops Tc.

(b) The load ratio circuit monitors RC flows and upon a difference in loop RC flows, anticipates a large change in Tc's, and through proportional action modifies the multiplier to modify the loop demands appropriately.

(c) This circuit is responsible for the immediate re-ratio of FDW upon starting or stopping a fourth RCP.

- NOTE: This circuit is independent of the ΔTc Bailey station and will modify loop demands even if the Bailey Station is in manual.

c) FDW loop demands will pass through individual H/A stations (Loop Masters) after any load ratio modification has occurred.

1) Placing these stations in manual will block any modification from the Load Ratio Control circuit.

d) FDW Loop Demands will be summed downstream of the hoop Masters to indicate a "total FDW demand" which will be used to create a Main FDW Pump Speed demand signal.

2. The 7kV feeder breakers are interlocked with switchyard isolation actuation to prevent them from closing and trip if closed during a LOOP event. This prevents the 7kV side of the Startup Transformer powering the RCPs from Keowee overhead thus preventing Keowee overload.

2.5 System Operation

A. Normal System Operation

1. RCP Motor Instrumentation and Controls

a) Controls:

1) START/STOP switch for RCP Motor (Unit 1 has an interlock bypass position)

2) START/STOP switch for AC Oil Lift Pump

3) START/STOP switch for DC Oil Lift Pump

4) LPSW-7/8, 9/10, 13/14, 11/12, LPSW Cooling Water Valves for the RCP Motor. These LPSW valve switches are located under the individual RCP start/stop switch on AB1. Single switch for both inlet and outlet valve to the motor. When changing LPSW valve position, always cheek the OAC - RCP GRAPHIC DISPLAY* to ensure that both valves travel to the correct position. Do NOT depend on the single open/close switch indication.

***INSTRUCTOR NOTE** – Show copy of **OAC RCP** Graphic Display and discuss information provided.

5) LPSW-6/15, LPSW Cooling Water Valves, located on the ESG RZ Panels, channels 5 and 6.

b) Indications:

1) RCP Motor Amp Gauges on Control Board 0 – 1.2 KA (normal .5)

(a) Uncommon motor Amp meter indications:

(1) 0 amps with breaker closed => sheered shaft

(2) Cycling amps => RCS voided

2) Computer-Analog Points

(a) RCP Speed 0-1200 RPM

(b) RCP MTR input PWR 0-14.4 MW

(c) RC MTR upper thrust Brg. Temp.0-390°F.

(d) RC MTR lower Air Temp0-390°F.

1 POINT

Question 5

Unit 2 plant conditions:

- Keactor startup in progress with Safety Rods withdrawn
- Instrument Ais (IA) header pressure = 0 psig
- Auxiliary Instrument Air (AIA) header pressure = 0 psig

Which ONE of the following is correct?

ASSUME NO REACTOR TRIP and NO OPERATOR ACTION

Pressurizer level will... change distracter

A. Increase due to an increase in Seal Return flow and a decrease in Letdown flow.

B. Increase due to an increase in Seal Injection flow and a decrease in Letdown flow.

C. Decrease due to an increase in Letdown flow and a constant Make-up flow.

5. Decrease due to an increase in Seal Return flow and a constant Seal Injection flow.

Question 5
T1/G1

022AA2.03 Loss of Reactor Coolant makeup,
Ability to determine and interpret the following as they apply to the Loss of Reactor Coolant Pump Makeup: Failures of flow control valve or controller
(3.1/3.6)

Answer: B

A. Incorrect, seal return flow will decrease due to HP-21 (RCP Seal Return) going closed

B. Correct, HP-31 (RCP Seal Flow Control) fails open and HP-5 fails closed.

C. Incorrect, letdown flow will decrease due to HP-5 (Letdown Isolation) closing

D. Incorrect, seal return Row will decrease due Io HP-21 (RCP Seal Return) going closed

---

Technical Reference(s):

Proposed references to be provided to applicants during examination: **None**

Learning Objective: **SSS-IA, R47**

Question Source: **Bank # SSS044702**

Question History: Last NRC Exam _____

Question Cognitive bevel: Memory or Fundamental Knowledge
Comprehension or Analysis

25. Describe the automatic operation of the AIA compressors with regards to the following setpoints: (R39)

    25.1 88 PSIG

    25.2 100 PSIG

    25.3 105 PSIG

26. Explain the purpose for the filters before and after the desiccant air dryers in the AIA system. (R40)

27. When given a list of components supplied by IA, be able to identify those, which also have a supply from the AIA system. (R41)

28. If a line break occurs in the AIA system, explain how the original IA system is protected from depressurization. (R42)

29. Describe the basic principle of operation of the Sullair Service Air compressors. (R15)

30. Describe how a Service Air compressor-pumping rate is controlled. (R17)

31. Explain the purpose of the compressor blowdown valve on a Service Air compressor. (R18)

32. Explain three reasons that oil is injected into the compression chamber of a Station Air cornpressor. (R19)

33. Explain three purposes of the receiver tank/oil sump on the Station Ais compressors.

34. Describe the normal and alternate cooling water supplies to Service Air compressors. (R16)

35. Explain the purpose of the oil stop valve in the Station Air Compressor. (R21)

36. Describe the Station Ais compressor operation for the following switch positions: (R22)

    36.1 AUTO

    36.2 MANUAL

    36.3 STANDBY

37. Explain the purpose of the air receiver tank in the Service Air System. (R23)

38. Explain the purpose of the "Del-Tech" filters in the Service Air System. (R24)

39. Describe the operation of SA-141 (SA to IA Controller) including automatic operation and failure mode. (R52)

40. Describe the general NLO responsibilities concerning the Service Air System during normal system operations. (R25)

41. Describe the NLO actions for the "Service Air Pressure Low" alarm. (R26)

42. Explain the purpose of the Standby Diesel Air Compressors used at Oconee. (R27)

43. Describe the basic actions that would have to be performed by NLO(s) following a Loss of Instrument Air. (R28)

44. Given a sequence of events, determine if a manual reactor trip would be required. (R44)

45. Explain why the Main Feedwater Pumps must be tripped if the operator manually trips the plant because of a loss of instrument air. (R45)

46. Explain the precaution that must be exercised when an NLQ is dispatched to manually open CC-8 because of an IA failure. (R46)

47. Explain why PZR and LDST levels may be affected if IA pressure is lost, and describe the appropriate actions that may be needed to ensure HPIPs integrity. (R47)

48. For an event involving failures in the Instrument Air System, analyze the situation to determine equipment available for recovering instrument air pressure to vital instrumentation and controls. (R48)

49. Explain the basis for the critical action steps of the following NLO JPMs associated with the IA system: (R51)

    48.1 NLO-007, Start the Diesel Air Compressor and Align to the Service Air Header

    48.2 NLO-016, Restore Load Centers and Verify IA Cornpressor Operation Following Loss of Power

    48.3 NLO-041, Restart the Primary Instrument A/C Following a Trip

2) On 11/18/94 an inadvertent valving in of 2A Seal Supply Filter occurred with the vent and drain valves open. This resulted in LDST level loss of approximately 50". Cause was inattention to detail of previous enclosure in progress to isolate filter showing valves had not been closed. It was assumed! A further contributor to the event was: no requirement to ensure that all vents and drains are closed prior to returning seal supply filter to service. Corrective actions added a caution to the enclosure to ensure vents and drains are closed prior to valving in filter and an evaluation and summary of lessons learned was prepared by individuals involved for Ops personnel to review. So, ensure vents and drains are closed prior to valving in filter.

b) On the outlet of the seal supply filters is the Total Seal Control Valve HP-31. Normal Seal Injection flow is 32 gpm for Unit 1 and *40* gpm for Units 2&3.

1) This pneumatic valve fails open on a loss of air and can be manually throttled closed by use of a handwheel located on the top of the valve actuator, to attain the desired seal injection flow.

c) **INTERLOCK:**

If seal injection flow should drop to ≤ 22 GPM OR Unit 1 or ≤ 30 GPM on Unit 2 & 3, the Standby HPI Pump will Auto Start if selected to "AUTO.

d) (Obj R21) if seal injection has been lost due to a loss of HPI Row, an HPI pump should **NOT** be started with HP-31 open. This prevents shocking the RCP Seals. A loss if Seal injection flow requires entry into AP/1700/014 to mitigate the event.

e) **INTERLOCK** (Units 2&3 only)

If seal injection flow drops below 4 GPM/pump on **each** pump for greater than one minute, 2, 3HP-31 will automatically close.

1) To open:

(a) Close HP-31 manual loader

(b) After HPI flow has been re-established slowly open HP-31 to re-establish Seal injection flow

(c) At least one RCP must have greater than 4 GPM within 1 min. of HP-31 being 10% open.

2) On Unit 1, if HPI is lost, 1HP-31 must be dosed by the operator before re-establishing HPI flow.

f) The totaf seal supply flow is divided equally among the RCPs by four manually throttled valves prior to entry into the Reactor Building. Individual RCP seal injection flow is indicated on VB3. Desired flow is 8 gpm/ pump Unit 1, 10 gpm/pump Unit 2/3.

Question 53 SSS044702 SSS044702

Unit 2 plant conditions:

- Reactor startup in progress with Safety Rods withdrawn.
- Instrument Air (IA) header pressure = 0 psig
- Auxiliary Instrument Air (AIA) header pressure = 0 psig

Which ONE of the following is correct? (.25)

ASSUME NO **REACTOR TRIP and NO OPERATOR ACTION**

Pressurizer level will...

A) Increase due to an increase in Seal Return flow and a decrease in Letdown flow.

B) Increase due to an increase in Seal Injection flow and a decrease in Letdown flow.

C) Decrease due to an increase in Letdown flow and a constant Make-up flow.

D) Decrease due to an increase in Seal Return flow and a constant Seal injection flow.

Answer 53
B

A. Incorrect, seal return flow will decrease due to HP-21 going closed
B. Correct, HP-31 fails open and HP-5 fails closed.
C. incorrect, letdown flow will decrease dueto HP-5 closing
D. Incorrect, seal return flow will decrease due to HP-21 going closed

1 POINT

Question 6

Unit 2 piant conditions:

- Fuel movement in progress
- Both S/Gs in full wet lay-up

Ops Test personnel want to perform valve stroke testing on 2LP-18 (2BLP Injection).

Which ONE of the following is correct?

Valve Testing is _____; because _____

A. allowed / the Fuel Transfer Canal is flooded.

B. allowed / both Steam Generators are filled.

C. not allowed / the RCS is not filled.

D. not allowed / two trains of LPI must remain operable.

Question 6
T1/G1

025AG2.1.32, Loss of WHR System
Ability to explain and apply all system limits and precautions. (3.4/3.8)

Answer: A

OP/1104/004, Limit and Precaution:
Removal of one LPI decay heat removal train from service shall *NOT* be *performed unless* one of the following conditions exist:

- *RCS is* filled and both *SGs* are filled *to* ≥ 50% on Operating Range and *are* available for heat transfer.
  or
- Unit is in *MODE 6* with fuel transfer canal flooded.
  or
- Core is defueled.

A, Correct, per L & P, one train of LPI may be removed from service as long as Unit in MODE 6 and the FTC is flooded.

B. Incorrect, first part true. Second part is incorrect because the RCS is not filled.

C. Incorrect, first part true incorrect. Per L & P, one train of LPI may be removed from service as long as Unit in MODE 6 and the FTC is flooded.

D. Incorrect: first part true incorrect. Per L & P, one train of LPI may be removed from service as long as Unit in MODE 6 and the FTC is flooded. Two trains of LPI do not have to remain operable per L&P.

Technical Reference(s): **OP/2/A/1104/004, Low Pressure Injection System**

Proposed references to be provided to applicants during examination: **None**

Learning Objective: **TA-DHR, R6**

Question Source: **Bank # TA060601**

Question History: Last NRC Exam _____

Question Cognitive Level: Memory or Fundamental Knowledge
comprehension or Analysis

TRAINING OBJECTIVES

Terminal Objectives:

1. The RO will be able to recognize the symptoms of a loss of DHR, utilize available instrumentation to diagnose a loss of DHR, and take the required actions to mitigate the loss of DHR event. (T1)

2. The SRO will be able to recognize the symptoms of a loss of DHR, utilize available instrumentation to diagnose a loss of DHR, and ensure that the team takes the required actions to mitigate the loss of DHR event. (T2)

Enabling Objectives

1. Explain why RCS levels do not have to be dropped below the suction connection to draw air into the LPI system. (R2)

2. Discuss the root cause for the loss of decay heat removal at Diablo Canyon, Oconee and Catawba stations. (R15)

3. Discuss the most likely cause of a RCS level error while in DHR at Oconee Nuclear Station. (RI)

4. Explain the following in relation to LT-5: (R3)

   4.1 how LT-5A(B) can be affected by a difference in pressure between the RCS and containment atmosphere

   4.2 how LT-5A(B) may react during a significant Rx Vessel level decrease

   4.3 any problem(s) that may be encountered due to a and b above

   4.4 Locations of indication for LT-5A and LT-5B

5. Explain the reason for the addition of the Ultrasonic Level Indicators. (R4)

6. Describe the indications available to the operator that can aid in recognizing a loss of DHR event. (R5)

7. **Describe the plant conditions that would allow one train of LPI *to* be inoperable. (R6)**

8. Discuss the reason that only one of the LPI emergency sump lines may have a blank Range installed at a time with fuel in the core. (R7)

B. Procedures

1. Many procedures were changed/written to enhance safe operation of the plant during shutdown conditions. S>D 1.3.5) Shutdown Protection Plan) was developed to define the requirements and plant conditions necessary to maintain safe conditions during Unit shutdown. This plan provides a set of standards and contingency plans that will assure "defense in depth" and will be adhered to as closely as possible by **all** personnel involved in the shutdown.

2. Summary of significant Limits and Precautions for OP/1/A/1102/11 (Controlling Procedure for Cold Shutdown), OP/1/A/1103/11 (Draining and Purging the RCS), and OP/1/A/1104/04 (Low Pressure Injection System) that relate to Decay Heat Removal reliability.

   a) The following limits and precautions concern LPI System:

      1) (Obj R6) Two trains of LPI (2 pumps and 2 coolers) shall be operable with fuel in core. An allowance is made to remove one LPI train from service with fuel in core when the following conditions exist:

         (a) 2 operable LPI pumps are aligned to operable LPI train and either:

            (1) RCS filled and both Steam Generators filled to 50% on Operating range and available for heat transfer.

            or

            (2) Unit in MODE 6 with fuel transfer canal flooded.

      2) If operating with only one LPI header, valve cycling in operating train is **NOT** allowed. This prevents single failure causing loss of BHR capability.

      3) Valves 1LP-1 (LPI RETURN BLOCK FROM RCS), 1LP-2 (LPI RETURN BLOCK), 1LP-3 (LPI HOP LEG SUCTION), and 1LP-4 (Return Line Manual Block) must **NOT** be closed during shutdown unless one of the following conditions exist:

         (a) During Heatup to MODE 4 when RCS is filled and at least 1 RCS Loop is in operation

         OR

         (b) Core is defueled.

         OR

         (c) 1LP-3 & 1LP-4 may be closed if alternate LPI pump suction path through 1LP-19/1LP-105 is established.

      4) 1LP-19 (1A RX BLDG SUCTION) can be cycled only during one of the following conditions:

1 POINT

Question 7

Unit 1 plant conditions:

- Reactor power = 100%
- IA/AIA system pressure = 40 psig and stable
- Statalarrns actuated:
  - 1SA-9/B1 CC CRD RETURN FLOW LOW
  - 1SA-9/C1 CC COMP COOLING RETURN FLOW LOW
- CC Pump status:
  - 1A CC Pump switch ON - RED light OFF/GREEN light illuminated
  - 1B CC Pump switch AUTO - RED light OFF/GREEN light illuminated

Which ONE of the following describes the correct operator action to restore operation of the CC system, if possible?

A. Dispatch an NLO to manually open 1CC-8.

B. Reopen 1CC-8 from the ES Channel 6 RZ Module.

C. Manually **start** the 1B CC Pump by placing the switch to ON.

D. CC cannot be restored, manually trip the reactor and all RC Pumps.

Question 7
T1/G1
026AA2.03, Loss of Component Cooling Water,
Ability to determine and interpret the following as they apply to the Loss of Component Cooling Water: The valve lineups necessary to restart the CCWS while bypassing the portion of the system causing the abnormal condition
(2.6/2.9)

Answer: A

A. Correct, CC-8 closes < 80 psig IA pressure. The valve should be manually reopened locally by an NLO.

B. Incorrect, CC-8 is normally operated from the ES Channel 6 RZ Module.

C. Incorrect, this would be correct if IA pressure was not law enough (>80 psig) to fail CC-8 closed.

D. Incorrect, this would be correct if CC-8 could not be manually reopened locally by an NLO and a loss of HPI seal injection occurred.

Technical Reference(s):

Proposed references to be provided to applicants during examination: None

Learning Objective: PNS-CC, R13, 14, 17

Question Source: Bank # PNS021701

Question History: Last NRC Exam _____

Question Cognitive Level: Memory or Fundamental Knowledge
Comprehension or Analysis

14. **Given a set of plant conditions, diagnose the cause of a CC System problem andlor determine the required corrective action. (R17)**

15. Evaluate the overall affect OR other plant systems based on the normal and/or abnormal operation *of* the CC system. (R18, R19)

16. When AP/1700/20, **Loss** of CC, is required to be utilized by the operator be able to demonstrate the following: (R20)
    - State the Entry Conditions, Immediate Manual Actions, and Contingency Actions in the **AP.**
    - Explain the basis for limits, cautions, notes and major steps in the **AP**
    - Based on plant data received, summarize proper operator actions and strategies required in the **AP** to mitigate the abnormal plant condition.
    - Describe general system **alignments,** available operator controls and instrumentation both inside and outside the control room.
    - Provide proper directions to operators and supporting groups performing actions of the AP outside the control room.

17. Given a copy of TS/SLCs, analyze **a** given set of conditions for applicable TS/SLC LCOs. (R21)

18. Apply all TS/SLC rules to determine applicable Conditions **and** Required Actions for a given set **of** plant conditions. (R22)

19. Compute the maximum Completion Time allowed for all applicable Required Actions to ensure compliance with TS/SLCs. (R23)

OBJECTIVES

TERMINAL OBJECTWE

Upon completion of this lesson, the studenf will be able to describe the purpose, operation, and response ofthe Component Cooling System during normal and abnormal piant conditions

ENABLING OBJECTIVES

1. Control Rod Drive Filters
2. Return Penetration Block Valves, CC-7 and CC-8.
3. Drain Tank and Pump
4. **RIA-50**
5. Describe the corrosion inhibitor used in the CC System, how it protects the system, and its associated hazard to personnel. **(R6)**
6. List the CC System controls and indications available to the operator in the control room. (R8)
7. Describe briefly the steps involved in startup of the CC System. (R9)
8. Describe the sequence and precautions necessary while valving in the spare CC cooler. (R10)
9. Explain the reason for draining the CRD service structure prior to pulling the reactor vessel head prior to refueling. (R1 I)
10. Descri4e the method of draining the CRD service structure. (R12)
11. **Explain how CC-8 failing closed at power affects plant operation. (R13)**
12. **Describe briefly the steps involved In reopening CC-8 after the valve has failed closed because of a loss of Instrument Air. (R14)**
13. Describe the six (6) interlocks and/or automatic actions associated with the 66 System. (R15)
14. Explain why the CC System must be in operation: (R16)

    14.2 Before letdown is established if RCS temperature is > 120° F

C. (OEJ R11, 12) Braining and Filling the CRD Service Structure

1. The CRB service structure must be drained before the Reactor Vessel Head can be removed to prevent spillage of CC water when the CC piping is disconnected.
2. After refueling is completed and the RV Head has been replaced, the CRB Service Structure must be refilled with water.
3. The CRD service structure is drained to the RB normal sump by:
   a) Ensuring CC-7 or CC-8 is closed.
   b) Throttling the L/D cooler vents & drains, then system high point vents
   c) Attaching an air hose to the CC header vent and slowing admitting air to blow the remaining water into the RB normal sump.
4. The CRB service structure is filled with the rest of the system by repeatedly filling the CC surge tank with demineralized water Lentil the surge tank level stabilizes.

D. (OBJ R13) Reopening CC-8 Manually Due to a Loss of Instrument Air to the Valve

1. 1. CC-8 must be re-opened as soon as possible if it shuts during power operation.
   a) CRD stator temperature will exceed 188°F within 4 minutes of a loss of CC flow.
   b) The reactor must be manually tripped if two or more individual CRD stator temperatures exceed 180°F.
   c) Also, a loss of cooling will result in HP-5 automatically shutting at 135°F letdown temperature.
   d) CC pumps will trip when CC-8 shuts, and will automatically restart after it has been re-opened.
2. (OEJ R14) CC-8 is reopened manually after it shuts by:
   a) Placing the selector lever in the MANUAL position and then rotating the handwheel in the open direction (counterclockwise). The lever does not have to be held in the manual position while operating the valve.
   b) If containment integrity is required, the operator must stay with the valve while it is open in manual, and return the lever to AUTO once the situation has been corrected. This returns the valve to automatic. Otherwise, the valve will be inoperable remotely.

b) IAAT two or more CRDM stator temperatures become greater than 180°F manually trip the reactor.

1) The AIA system should supply air pressure to maintain CC-8 operable. Therefore, the CRDMs should continue to be cooled after the loss of IA event.

NOTE: After a plant trip, as always, the EOP is entered. The Loss of Air AQ must also be continued in parallel with the EOP.

c) IAAT LDST level < 40", ensure HP-24/25 open.

d) Ensure Primary IA Cornpressor is operating

e) Place Backup IA Compressor switches in the "BASE" position and investigate for leakage.

f) Verify AIA Compressor has started and is operating properly.

g) IAAT If IA Header Pressure is < 80 PSIG and letdown is desired, then align letdown as follows:

- Place HP-14 to NORMAL
- HP-13 Open
- Verify "A" Letdown Filter is available, then Open HP-17
- Verify HP-6 Open: and adjust HP-7 as desired

h) IAAT AIA header pressure is < 80 PSIG

1) CC-8 will fail shut at ≈ 80 PSIG decreasing IA pressure:

(a) CC Pumps to trip and

(b) Loss of CC flow to Letdown Coolers, RCPs, QT Coolers, and the CRDM Stators.

2) As indicated already, this will result in loss of cooling to the CRDMs and would require a unit trip that may otherwise be avoidable.

3) As a rule of thumb, CRDMs will reach required trip temperatures in ≈4 minutes after CC-8 closes.

4) Therefore, not much time will be available to reestablish CC flow after CC-8 isolates; an operator should have already been dispatched to manually open CC-8. Manually opening CC-8 causes it to be uncontrollable from the Control Room.

5) (Obj. R46) Remember that since CC-8 is an ES isolation valve, an operator in constant communications with the Control Room is required to remain stationed at CC-8 until it is closed or returned to "AUTO".

Question 39 PNS021701 PNS021701

Unit 1 conditions:

- Reactor power = 100%
- IA/AIA system pressure = 40 psig and steady
- Statalarms actuated:
  - 1SA-9/B1 CC CRD RETURN FLOW LOW
  - 1SA-9/C1 CC COMP COOLING RETURN FLOW LOW
- CC Pump status:
  - 1A CC Pump switch ON - RED light OFF/GREEN light illuminated
  - 1B CC Pump switch AUTO - RED light OFF/GREEN light illuminated

Which ONE of the following describes the correct operator action to restore operation of the CC system, if possible?

A. Dispatch an **NLO** to manually open 1CC-8.

B. Reopen ZCC-8 from the ES Channel 6 RZ Module.

C. Manually start the 1B CC Pump by placing the switch to ON.

5. CC cannot be restored, manually trip the reactor and all RC Pumps.

Answer 39
A
A - CORRECT - CC-8 closes < 80 psig IA pressure. The valve should be manually reopend locally by an NLO.
B. Incorrect - 66-8 is normally operated from the ES Channel 6 RZ Module.
C. Incorrect - This would be correct if IA pressure was not low enough (>80 psig) to fail CC-8 closed.
5. Incorrect - This Would be correct if CC-8 could not be manually reopened locally by an NLO and a loss of HPI seal injection occurred.

1 POINT

Question 8

Unit 1 has been stabilized following an overcooling transient and the following conditions exist:

- Tavg = 550°F
- RCS Pressure = 2000 psig
- Pressurizer bevel = 250 inches and slowly increasing
- Pressurizer Temperature = 610°F
- Pressurizer Heaters Energized

Which ONE of the following describes the PRESENT state of the pressurizer?

The pressurizer is _____ for the current RCS pressure and the _____ maintaining RCS pressure.

A. saturated / pressurizer heaters are

5. subcooled / pressurizer heaters are

C. saturated / compressed steam bubble in the pressurizer is

D. subcooled /compressed steam bubble in the pressurizer is

Question 8
T1/G1

027AK1.01, Pressurizer Pressure Control System Malfunction,
Knowledge of the operational implications of the following concepts as they apply to Pressurizer Pressure Control Malfunctions: Definition of saturation temperature (3.1/3.4)

Answer: D

A. Incorrect, the pressurizer is not saturated.

B. Incorrect, first part is correct. Second part is incorrect. The pressurizer is not saturated and the heaters will not increase pressure until saturated conditions are achieved.

C. Incorrect, the pressurizer is not saturated.

D. Correct, the pressurizer is not saturated and the steam bubble in the pressurizer is temporarily maintaining RCS pressure artificially above its true saturation point for the pressurizer temperature.

Technical Reference(s):

Proposed references to be provided to applicants during examination: None

Learning Objective: PNS-PZR, R16

Question Source: Bank # PNS142201

Question History: bast NRC Exam _____

Question Cognitive bevel: Memory or Fundamental Knowledge
Comprehension or Analysis

TRAINING OBJECTIVES

TERMINAL OBJECTIVE

1. Upon completion of this lesson, the student will demonstrate an understanding of the components, indications, controls and operation of the Pressurizer. The student will be able to assess the status of the Pressurizer during normal, abnormal and emergency conditions and determine corrective actions for improper system operation. The student will also be able to apply any ITS/SLC Conditions and Required Actions associated with the Pressurizer (T1).

ENABLING OBJECTIVES

1. Explain the design basis of the pressurizes. (R21)

2. Describe pressurizer response during load or RCS temperature changes. (R1)(R2)(R3)

3. Given a set of conditions, calculate the change in pressurizer level for a change in RCS temperature. (R33)

4. Explain what is meant by a "subcooled" pressurizer and how to determine if the pressurizer is in a subcooled condition.(R22)(R27)

5. Explain what is meant by a pressurizer "hard bubble" and describe the adverse effects of a "hard bubble" on plant operation, (R23)

6. Identify the source of pressurizer spray for each unit. (R4)

7. Discuss the automatic setpoints and any interlocks associated with pressurizer instrumentation. (R5)

8. Explain the operation of the ICS RC pressure signal median select function as it relates to RC pressure control including: (R28)

   8.1 How median select chooses the controlling signal

   8.2 Which pressurizer components receive a median selected RC pressure signal.

9. Given a set of conditions, determine which RC pressure signal has been selected for control by the ICS RC pressure signal median select function. (R36)

10. Discuss the reasons for bypass flow around the pressurizer spray valve during normal operation. (R6)

11. Evaluate plant response to a failed open pressurizer spray valve without operator action. (R20)

Question **260** **PNS142201** **PNS142201**

Unit **1** has been stabilized following an overcooling transient and the following conditions exist:

- Tavg 550°F
- RCS Pressure 2000 psig
- Pressurizer Level 250 inches
- Pressurizer Temperature 610°F
- Pressurizer Heaters Energized

Which ONE of the following describes the PRESENT state of the pressurizer? (.25)

The pressurizer is _____ for the current RCS pressure and the _____ maintaining RCS pressure.

A) saturated ▮pressurizer heaters are

B) subcooled ▮pressurizer heaters are

C) saturated / compressed steam bubble in the pressurizer is

D) subcooled ▮compressed steam bubble in the pressurizer is

Answer **260**
D
A. Incorrect - the pressurizer is not saturated.
B. Incorrect - the pressurizer is not saturated and the heaters will not increase pressure until saturated conditions are acheived.
C. Incorrect - the pressurizer is not saturated.
D. Correct - the pressurizer is not saturated and the steam bubble in the pressurizer is temporarily maintaining RCS pressure artificially above its true saturation point for the pressurizer temperature.

1 POINT

Question 9

Unit 2 plant conditions:

- Unit tripped due to Main Turbine trip
- CRD breakers opened
- Two control rods stuck at 15% withdrawn
- Reactor power = 7% and stable by Wide Range indication
- Rule #1 ATWS/Unanticipated Nuclear Power Production is in progress

Which ONE of the following is the correct **available** course of action?

A. Ensure 2HP-5, Letdown Isolation is closed.

B. Manually drive the stuck control rods to their In-limit.

C. Borate the RCS by aligning the BWST to the HPI suction.

D. Control FDW manually until Thot (with RCPs) stabilizes.

Question 9
T1/G1
029EK3.11, ATWS
Knowledge of the reasons for the following responses as they apply to the ATWS: Initiating Emergency Boration (4.2/4.3)

Answer: C

A. Incorrect, HP-5 is left open with reactor power > 1% to allow for maximizing letdown and RCS expansion.

B. Incorrect, the CRD breakers are open and the stuck rods cannot be driven with the trip breakers open.

C. Correct, the initial action of Rule 1 is to manually drive rods if any Power Range NI indicates ≥ 5%. The rods cannot be manually driven however there is no RNO for this action. The next step of Rule 1 has the operator open HP-24/25 to add negative reactivity from the **BWST.**

D. Incorrect, FDW will be automatically controlled at Low Level Limits

---

Technical Reference(s): EOP Rule 1

Proposed references to be provided to applicants during examination: None

Learning Objective: EAP-UNPP, RIO

Question Source: Bank # EAP111003

Question History: Last NRC Exam _____

Question Cognitive Level: Memory or Fundamental Knowledge
Comprehension or Analysis

Rule 1
ATWS/Unanticipated Nuclear Power Production

ACTION/EXPECTED RESPONSE	RESPONSE NOT OBTAINED
1. __ Verify any Power Range NI ≥ 5% FP.	__ GO TO Step 10.
2. __ Initiate manual control rod insertion t the IN LIMIT.	
3. Open both of the following: __ 1HP-24 1HP-25	__ GO TO Step 16.
4. __ Ensure 1A or 1B HPI pump is operati	
5. __ Start 1C HPI Pump.	1. __ Start the standby HPI pump. 2. __ Open 1HP-409.
6. Open the following: __ 1HP-26 __ 1HP-27	1. __ IF 1HP-26 wili NOT open, THEN open 1HP-410. 2. __ IF at least two HPI pumps are operating, ANT) 1HP-27 will NOT open, THEN perform the following: A. __ Start the standby HPI pump. E. __ Stop IC HPI Pump. C. __ Open 1HP-409.
7. Dispatch one operator to open 600V CR breakers on the following: __ 1X9 (U1 Equipment Rm) __ 2X1 (T-3/Dd-28)	
8. __ Notify CR SRO to GO TO UNPP tat	
9. __ EXIT this rule.	
10. __ Verify an unexpected increase in neu flux is observed.	__ GO TO Step 2.
11. __ Stop all dilution activities in progress	
12. __ Initiate maximum boron addition.	
13. __ Stabilize RCS temperature.	
14. __ WHEN ≥ 1% SDM is estabiished, THEN stop boron addition.	
IS. __ EXIT this rule.	

•••END•••

THIS PAGE INTENTIONALLY BLANK

ACTION/EXPECTED RESPONSE	RESPONSE NOT OBTAINED
16. Dispatch one operator to open 600V CRD breakers on the following: __ 1X9 (U1 Equipment Rm) 2XI (T-3/Dd-28)	
17. Verify both ofthe following: __ 1HP-24 closed __ 1HP-25 closed	__ ***GO* TO** Step 21.
18. __ Start 1A LPI Pump.	__ Start 1B LPI Pump.
19. Open the following: (23) __ 1LP-15 __ 1LP-16 __ 1LP-6 __ 1LP-7 __ 1LP-9 __ 1LP-10	
20. __ Dispatch an operator to open 1HP-363 (LETDOWN LINE TO LPI PUMP **SUCTION** BLOCK) **(A-1-119,** U1 LPI Hatch Area, 28' W of North **door).**	
21. __ Ensure 1A or 1B HPI pump is operating.	
22. __ Start 1C HPI Pump.	1. __ Start standby HPI pump 2. __ Open 1HP-409.
23. __ Ensure only two HPI pumps operating.	
24. Open the following: 1HP-26 __ 1HF-27	1. __ **IF** 1HP-26 will **NOT** open, **THEN** open 1HP-410. 2. __ **IF** at least two HPI pumps are operating, **AND** 1HP-27 will **NOT** open, **THEN** perfom the following: **A.** __ Start the standby HPI pump. B. __ Stop 1C HPI Pump. C. __ Open 1HP-409.
25. __ Notify CR SRO to **GO TO** UNPP tab.	
26. __ **EXIT** this rule.	

• • • END • • •

THIS PAGE INTENTIONALLY BLANK

8. Explain why the operator should control feedwater to match Rx power production during an UNPP event until RCS temperature stabilizes, i.e. no heatup or overcooling. (R7)

9. State when an UNPP event is considered to be terminated. (R9)

10. Explain what section of the EOP is transferred to following a successful completion of the UNPP section and what this transfer is based on. (R13)

11. **Given plant conditions,** determine **appropriate actions based on UNPP section of the EOP. (R10)**

12. Explain the basis for cautions, notes and major steps in UNPP and Rule 1 (ATWS/UNPP). (R8)

13. Given plant conditions, determine if HPI throttling requirements are met per Rule 6 (Throttling HPI). (R12)

Question 289 EAP111003 EAP111003

Unit 2 plant conditions:

- Unit tripped due to Main Turbine trip.
- CRD breakers opened
- Two control rods stuck at 15% withdrawn.
- Reactor power = 7% and stable by Wide Range indication
- EOP section UNPP was entered by the operating crew.
- Rule #1 ATWS/Unanticipated Nuclear Power Production is in progress.

Which ONE of the following is the correct available course of action? (.25)

A) Ensure 2HP-5, Letdown Isolation is closed.

B) Manually drive the stuck control rods to their In-limit.

C) Borate the RCS by aligning the BWST to the HPI suction.

D) Control FDW manually until Phot (with RCPs) stabilizes.

Answer 209
C
A) Incorrect- HP-5 is left open with reactor power > 1% to allow for maximizing letdown and RCS expansion.
B) Incorrect- The CRD breakers are open and the stuck rods cannot be driven with the trip breakers open.
C) Correct- The initial action of Rule 1 is to manually drive rods if arty Power Range NI indicates ≥ 5%. The rods cannot be manually driven however there is no RNO for this action. The next step of Rule 1 has the operator open HP-24/25 to add negative reactivity from the BWST.
D) Incorrect- FDW will be automatically controlled at Low Level Limits

1 POINT

Question 10

Unit 1 plant conditions:

INITIAL CONDITIONS:
- RIA-40 and RIA-17 in alarm
- RCS temperature = 525°F
- RCS pressure = 1200 psig
- RCS cooldown in progress

CURRENT CONDITIONS:
- RCS temperature = 425°F
- RCS pressure = 550 psig

Which ONE of the following is correct?

From initial to current conditions, subcooling margin has _____ and SG tube leakage rate has _____

A. increased / increased

B. increased / decreased

C. decreased / decreased

D. remain the same / remain the same

Question 10
T1/G1

038EK1.02, Steam Generator Tube Rupture
Knowledge of the operational implications of the following concepts as they apply to the SGTR: Leak rate vs. pressure drop (3.2/3.5)

Answer: B

A. Incorrect, SCM will increase however the leak rate will decrease since the delta F between primary and secondary has decreased.

B. Correct, during cooldown the SCM increases due to maintaining RC pressure above the RCP NPSH curve. SGTL size will decrease due to the decrease in primary to secondary DP (RCS to Secondary DP initial conditions = 350 psig / current conditions = 200 psig.

C. Incorrect, SCM increases due to maintaining RC pressure above the RCP NPSH curve. Second part correct.

D. incorrect, SCM increases due to maintaining RC pressure above the RCP NPSH curve. SGTL sine will decrease due to the decrease in primary to secondary DP (RCS to Secondary DP initial conditions = 350 psig / current conditions = 200 psig.

Technical Reference(s):

Proposed references to be provided to applicants during examination: Steam Table

Learning Objective: EAP-SGTR, R6

Question Source: Bank # EAP090602

Question History: Last NRC Exam _____

Question Cognitive Level: Memory or Fundamental Knowledge
Comprehension or Analysis

TRAINING OBJECTIVES

TERMINAL OBJECTIVE

Describe the use of the SGTR tab of the Emergency Operating Procedure in order to perform the required actions during an event involving a primary to secondary leak greater than 25 gpm. Be able to discuss the SGTR procedure steps and their bases in an oral or written format. Discuss in an overview format how SGTR tab mitigates a SGTR event and places the plant into MODE 5 with the affected SG(s) isolated and heat removal via LPI.

ENABLING OBJECTIVES

1. Using an overview format describe the intent of this procedure including the 4 main strategies of SGTR mitigation. (R1)

2. Given a set of conditions, be able to identify and quantify OTSG tube leakage. (R2)

3. Explain why it is important to place the TBVs in hand just prior to manually tripping the reactor. (R3)

4. During a SGTL shutdown explain the importance of maintaining PZR levels ≥ 220, 140 - 180, and >100 inches at different times during the shutdown and cooldown to 532°F. (R4)

5. Explain how the affected SG is isolated and why it is not done until an RCS temperature of 532°F is reached. (R5)

6. Explain how and the reason for maintaining the subcooled margin as close as possible to 0°F during the cooldown. (R6)

7. Given a set of conditions determine the proper Cooldown Plateaus and state the bases behind the specified plateaus understanding when boration or suction from BWST actually commences when using the Cooldown Plateaus. (R13)

8. Given a situation understand that throttling FDW flow may be the only method for controlling the cooldown rate when feeding a SG with a steam leak. (R7)

9. Describe the reason for the increased concern over available BWST inventory during a SGTR event if the cooldown rate is not properly maintained. (R8)

10. Given a set of plant conditions calculate and explain the basis for the limit(s) for SG tube-to-shell AT. (R9)

11. Given a set of plant conditions calculate and explain the basis for the limit(s) for SG Level Water in the Steam Line. (R15)

12. Describe the options the crew has to mitigate a rising SG level to prevent water entering the steam line. (R16)

2.32 **(OBJ R6)** *While maintaining* **the** *following:*

- *RCP* **NPSH** *(if* any RCP *operating)*
- Pzr level

Minimize core **SCM** *using the following methods as necessary:*

- *De-energizing* all Pzr *heaters*
- *Using* Pzr *spray*
- *Throttling* HPI

A. *The SRO will direct the crew to maintain a SCM band that* **is** *low enough to lower the leak rate but is high enough for the crew to maintain without the threat of saturation and losing RCP operation.*

B. *EXAMPLE: SRO tells the crew to "maintain SCM @ 10°F ± 5°F".*

C. *Minimizing SCM reduces the ΔP across the SG tubes therefore the leak rate decreases.*

1. *Decreasing the pressure differential between the RCS and the leaking steam generator can reduce ?betube leak flow.*
2. *An isolated steam generator will be at approximately the saturation pressure of the primary as long as the steam generator is not water solid.*
3. *By decreasing the primary subcooled margin (making the primary closer to saturation) the primary to secondary pressure differential can be reduced and the tube leak flow will decrease.*
4. *Therefore, the RCS pressure should be controlled* **as** *low as possible while maintaining the subcooled margin and the RCP NPSH* (if *any RCPs are running). Depressurization methods in the order of preference are:*

   a) *Normal PZR Spray*

   b) *Turn PZR heaters off and lower PZR level*

   c) *If Delta-T < 410° F, Use Aux. PZR Spray*

   d) *Open RC-66 (PORV)*

   e) *If Delta-T > 410° F,* **Aux.** *Spray (Emergency Coordinafor authorization required to violate the 410° F Delta-T).*

Question 167 EAP090602 EAP090602

Unit a plant conditions:

INITIAL CONDITIONS:

- **RIA-40** and RIA-I**7** in alarm
- RCS temperature = 525°F
- RCS pressure = 1200 psig

CURRENT CONDITIONS:

- RCS temperature = 425°F
- RCS pressure = 550 psig

Which ONE of the following is correct? (.25)

From initial to current conditions, subcooling margin has _____ and SG tube leakage rate has _____

SEE ATTACHMENT

A. increased / increased

B. increased ▮ decreased

C. decreased / decreased

D. remain the same / remain the same

Answer 167
5

A. Incorrect – SCM will increase however the leak rate will decrease since the delta P between primary and secondary has decreased.
5. Correct – SCM increases due to maintaining **RC** pressure above the RCP NPSH curve. SGTL size will decrease due to the decrease in primary to secondary DP (RCS to Secondary DP intital conditions = 350 psig / current conditions = 200 **psig.**
C. Incorrect – See **A** and B
D. incorrect – See A and B

1 POINT

Question 11

Unit 1 plant conditions:

INITIAL CONDITIONS:
- Reactor power = 100%

CURRENT CONDITIONS:
- "1A" MSLB in RB
- RB pressure = 4.7 psig
- Rule 5 (Main Steam Line Break) complete

Which ONE *of* the following is correct?

"1B" SG level should be controlled _____at_____

A. automatically / 2 5 S/U level

B. manually / 55" S/U level

C. automatically / 3 0 XSUR

D. manually / 60" XSUR

Question 11
T1/G1
040AK2:02, Steam Line Rupture-Excessive Heat Transfer,
Knowledge of the interrelations between the Steam Line Rupture and the following: Sensors and detectors (2.6*/2.6)

Answer: D

A. Incorrect, both parts would be correct if Main FDW were operating and RB pressure were less than 3 psig.

B. Incorrect, both parts would be correct if Main FDW were still operating.

C. Incorrect, both parts would be correct if RB pressure were **less** than 3 psig.

D. Correct, "B" SG level should be controlled manually at 60" XSUR. Rule 5 (MSLB) will have ensured the Main FDW pumps are secured. EFDW should control in auto at *30"* XSUR. However since RB pressure is greater than 3 psig SG level should be controlled manually at the acc value of 60" XSUR. This is because of the error in the SG level as a result of the degraded RB atmosphere caused by the steam line break.

Tech Ref(;) **E OP Rule 7 (SG Feed Control)**

Proposed references to be provided to applicants during examination: None

Learning Objective: EAP-LOHT, R27

Question Source: NEW

Question History: Last NRC Exam _____

Question Cognitive Level: Memory or Fundamental Knowledge
Comprehension or Analysis

Table 1 Maximum Feed Rates When All SCMs are > 0°F		
SG Condition	**Flow Instrument**	**Maximum Feed Rate**
Dry SG w/o Heat Transfer	EFDW flow indicator	100 gpm to affected SG
	S/U FDW flow indicator	0.05 x 10^6 lbm/hr to affected SG
	SSF ASW flow indicator	100 gpm total to Unit 1
Non-dry SG **OR** Dry SG with Heat Transfer	EFDW flow indicator	1000 gpm per header
	S/U FDW flow indicator	0.5 x 10^6 lbm/hr per header
	SSF ASW flow indicator	500 gpm total to Unit 1

Table 2 Feed Rates To Be Established When Any SCM is = 0°F and Rapid Cooldown NOT in Progress			
NOTE After initial feed rates are established, flow should be throttled to maintain cooldown rate within Tech Spec limits but SG levels must continue to increase until LOSCM setpoint is reached.			
FDW source	**Flow Instrument**	**Initial Feed Rates**	
Emergency FDW	EFDW total flow indicator	1 SG	450 gpm
		2 SGs	300 gpm each
	S/U FDW flow indicator	1 SG	0.23 x 10^6 lbm/hr
		2 SGs	0.15 x 10^6 lbm/hr each
Main FDW	S/U FDW flow indicator	1 SG	0.33 x 10^6 lbm/hr
		2 SGs	0.22 x 10^6 lbm/hr each
SSF ASW **AND NO** SSF Event *	**SSFASW** flow indicator	400 gpm total to Unit 1	
SSF ASW **AND** SSF Event *	SSF ASW **flow** indicator	AP/25 controls feed rate	

*SSF activated per AP/25 with both SSF RC Makeup and SSF Aux Service Water systems required. {31}

THIS PAGE INTENTIONALLY BLANK

Table 3
Emergency FDW Pump and Header Maximum Flow Limits

		EFDW flow indicator	S/U FDW flow indicator
MDEFDWP	(suction from HW)	440 gpm/pump	0.22×10^6 lbm/hr
	(suction from UST)	600 gpm/pump	0.30×10^6 lbm/hr
TDEFDWP (any suction source)		950 gpm	0.45×10^6 lbm/hr
Emergency FDW Header Flow		1000 gpm	0.5×10^6 lbm/hr

Table 4
SG Level Control Points

Plant Condition	Main FDW Pump	EFDW Pump	SSF ASW Pump
All SCMs > 0°F AND any RCP on	25" [55" acc] S/U level	30" [60" acc] XSUR (use MFDW setpoint if feeding via S/U CVs)	30" [60" acc] XSUR
All SCMs > 0°F AND all RCPs off	50% [50% acc] Operating Range	240" [270" acc] XSUR [use MFDW setpoint if feeding via SA1 CVs)	240" [270" acc] XSUR
Any SCM = 0°F AND NO SSF Event *	95% [95% acc] Operating Range	LOSCM setpoint (Turn-on code "EFW" or Per Table 5)	LOSCM setpoint (Turn-on code "EFW" or Per Table 5)
Any SCM = 0°F AND SSF Event *	N/A	N/A	Per AP/25
Superheated with CETCs ≤ 1200°F	95% [95% acc] Operating Range	LOSCM setpoint (Turn-on code "EFW" or Per Table 5)	LOSCM setpoint (Turn-on code "EFW" or Per Table 5)
Superheated with CETCs > 1200°F	Per Encl 5.15 (ICC Full Range SG Level)	Per Encl 5.15 (ICC Full Range SG Level)	Per Encl 5.15 (ICC Full Range SG Level)

* SSF activated per AP/25 with both SSF RC Makeup and SSF Aux Service Water systems required. [31]

THIS PAGE INTENTIONALLY BLANK

NOTE

If RB Temperature indication is unavailable, utilize RB pressure on the bottom row to calculate LOSCM setpoint.

Table 5
Desired Indicated XSUR Level (inches) To Establish For LOSCM

	RB Press < 3 psig	RB Press ≥ 3 psig					
RB Temp (°F) → / SG Press (psig) ↓	N/A	> 100 to 150	> 150 to 200	> 200 to 250	> 250 to 300	> 300 to 350	> 350
0 to < 50	360	370	375	385	388	388	388
50 to < 100	345	355	360	370	380	388	388
100 to < 150	340	345	350	360	370	380	388
150 to < 200	330	340	345	355	365	375	385
200 to < 300	325	335	340	350	360	370	380
300 to < 400	320	325	335	340	350	360	375
400 to < 500	310	320	325	335	345	355	365
500 to < 600	305	310	320	325	335	350	360
600 to < 700	300	305	315	320	330	345	355
700 to < 800	295	300	310	315	325	335	350
800 to < 900	290	295	305	310	320	330	345
900 to < 1000	285	290	300	305	315	325	340
1000 to < 1100	280	285	295	300	310	325	335
≥ 1100	275	280	290	295	305	320	330
SG Press (psig) ↑ / RB Press (psig) →	N/A	3.0 to 5.0	> 5.0 to 15.0	> 15.0 to 35.0	> 35.0 to 72.5	> 72.5 to 140.0	> 140.0

THIS PAGE INTENTIONALLY BLANK

13.1 Recognize that degraded HPI cooling may require feeding the SGs with lake water from either the SSF-ASWP of the Station ASWP.

14. Given plant conditions, determine appropriate actions based on Enclosure 5.8 (Feeding SGs with Station ASW). (R31)

15. Recognize that if there are **NO HPIPs** AND **NO** FDW available (from any source) that the PORV **must** be manually cycled (to conserve RCS inventory), and **RCPs** secured to have 1 RCP/loop (to reduce RCS heat input). Efforts must continue to restore HPIPs or the ability to feed the SG(s). (R20)

16. Given plant conditions, determine appropriate actions based on Rule 7 (SG Feed Control). (R27)

17. Given plant conditions, determine appropriate actions based on "Loss of Heat Transfer" tab of the EOP. (R22)

1 POINT

Question 12

Unit 1 plant conditions:

Time = 0200
- Power = 100%

Time = 0202
- '1A' SG pressure = 100 psig
- '1B' SG pressure = 810 psig
- RB pressure = 11 psig
- PZR level = 9" and decreasing
- RCS pressure = 1610 psig and decreasing
- CETCs = 520°F and decreasing.

Which ONE of the following is correct?

A _____ has occurred and _____

ASSUME NO OPERATOR ACTION

A. Small break LOCA / ES Channels 3 and **4** should have actuated

B. Small break **LOCA** / ES Channels 3 and **4** should have NOT actuated

C. Main FDW line break / AFIS should have secured the Main FDW pumps

D. Main FDW line break / **AFIS** should NOT have secured the Main FDW pumps

Think about.

Question 12
T1/G1

054AK1.01, Loss of Main Feedwater,
Knowledge of the operational implications of the following concepts as they **apply to Loss of Main Feedwater** (MFW): MFW line break depressurizes the S/G **(similar to a steam line break)** (4.1/4.3)

Answer: C

A. Incorrect- High containment pressure would be reached over a period of time, depending on break size. Pressurizer level would decrease due to the leak. RCS pressure would also decrease based on the leak. CETC's would not decrease based *on* ***a*** small break LOCA. RCS **is** not saturated. Second part correct. **ES** channels 3 and **4** should have actuated on RB pressure > 3 psig.

B. Incorrect- High containment pressure would be reached over a period of time, depending on break size. Pressurizer level would decrease due to the leak. RCS pressure would also decrease based on the leak. CETC's would not decrease based on a small break LOCA. RCS *is* not saturated. Second part incorrect. ES channels 3 and 4 should have actuated on RB pressure > 3 psig. Would not have actuated on low RCS pressure.

C. Correct- Indications are present that indicate an Excessive heat transfer which is resulting in an overcooling event. A FDW line break in the RB would result in a plant response similar to a Main Steam Line break. **AFIS** will actuate which will secure both Main FDW pumps.

D. Incorrect- first part correct. Indications are present that indicate an Excessive heat transfer which is resulting in an overcooling event. A FDW line break in the RB would result in a plant response similar to a Main Steam Line break. **AFIS** will actuate which will secure both Main FDW pumps.

Technical Reference(s):

Proposed references to be provided to applicants during examination: None

Learning Objective: **EAP-EHT, R01;** CF-FDW, R43

Question Source: Bank # EAP081401 (modified)

Question History: Last NRC Exam _____

Question Cognitive Level: Memory or Fundamental Knowledge
Comprehension or Analysis

OBJECTIVES

TERMINAL OBJECTIVE

1. Describe the use of Excessive Heat Transfer (EHT) of the EQP in order to perform the required actions of a Control Room Operating crew during an event involving an excessive heat transfer transient and provide the operators guidance to properly use and understand the steps within the EHT section of the EOP. (T1)

ENABLING OBJECTIVES

1. Describe the conditions that would require entry into EHT. (R1)
2. Discuss the overall mitigation strategy of EHT. (83)
3. Recognize that pressurized thermal shock conditions may develop if HPI flow is not appropriately throttled during an overcooling event. (R2)
4. Recognize that a transfer to Loss of Subcooiing Margin section, following an excessive heat transfer event, is made per the parallel actions step if any SCM is reading 0°F and HPI forced cooling is NOT in progress. (R6)
5. Explain the possible personnel safety hazard involved with reestablishing feedwater to a SG with a MS line leak; discuss the precautions that should be taken before feeding the SG. (R4)
6. Explain the concern involved with reestablishing feedwater to an intact SG that is dry. (R5)
7. Describe the bases for securing the RBS System when RB pressure <10 psig if the Reactor Building radiation levels are normal. (R7)
8. Explain the basis for cautions, notes and major steps in EHT. (R8)
9. Given plant conditions, determine appropriate actions based on EHT section of the EOP. (R13)
10. Given plant conditions, determine appropriate actions based on Rule 5 (MSLB). (R14)
11. Define "Pressurized Thermal Shock". (R10)
12. Explain why the NDT curve does not have to be violated to run the risk of brittle fracture to the reactor vessel. (RI1)
13. Given plant conditions, demonstrate the ability to determine any Rule 8 (PTS) requirements. (R12)

1. INTRODUCTION

1.1 Excessive Heat Transfer (EHT) is entered when excessive primary to secondary heat transfer is or has been apparent as indicated by low SG pressure or decreasing RCS temperature and pressure.

EHT would apply if MSLB occurs or cooldown has been excessive due to reduced SG pressure or excessive FDW / EFDW flow.

1.2 (Obj. R1) Entry into EHT can be from:

A. Parallel Actions pages

B. Subsequent Actions diagnostics steps transfer

C. Loss of Subcooling Margin section

1.3 (Obj. R3) Overall Mitigation Strategy

A. Terminate the cause of the overcooling transient.

B. Restore controlled primary to secondary heat transfer.

C. Stabilize RCS pressure and temperature.

D. Backup SG heat removal by establishing HPI cooling if required.

1.4 Concerns

Excessive primary to secondary heat transfer is always caused by a failure in the control of secondary side parameters. This failure manifests itself as a loss of steam pressure, excessive steam flow, excessive FDW flow, or perhaps a combination of both. An extended overcooling is a severe shock to the plant and requires quick and effective action by the operator to mitigate the transient. There are several concerns as follows:

A. Loss of Pzr level

An extended overcooling can result in a loss of Pzr level. This, in turn, causes a loss of RC pressure control. An extended overcoding can empty the surge line, which results in the RCS becoming saturated.

B. Saturated RCS with Extended Overcooling

A large steam line break or extended overcooling (Le., continued FDW with small steam line break) can result in a saturated RCS. This requires treatment of the higher priority symptom, which is a loss of SCM. After treating the loss of SCM (e.g., tripping RCPs and initiating HPI), the excessive overcooling should be treated.

14. State the setpoints and automatic actions that occur based on FDWP discharge pressure and FDWPP hydraulic oil pressure. (R29)

15. Given a set of conditions, determine proper operation of the FDWP Seal Injection System. (R30, R31)

16. Describe the purpose of the Automatic Feedwater Isolation system. (R34)

17. Describe the instrumentation, statalarms and computer points associated with the AFIS modification. (R42)

18. Given a set of conditions, verify proper operation of AFIS. (R43)

19. Discuss when AFIS is placed in and out of service. (R44)

20. Given a copy of ITS / SLC's and associated Bases, analyze a given set of plant conditions for applicable ITS / SLC LCO's. (R11)

21. Apply all ITS / SLC rules to determine applicable Conditions and Required Actions for a given set of plant conditions. (R39)

22. Compute the maximum Completion Time allowed for all applicable Required Actions to ensure compliance with ITS / SLC's. (R40)

23. Given a set of conditions, analyze FDW System operation to determine system status and any required actions / corrective actions. (R37)

24. Draw a basic one-line diagram of the Feedwater System including all major components and valves. (R36)

D. (Obj. R43) AFIS Operation (FDW-07)

1. Isolation of Main Feedwater and Tripping of the TDEFDWP

a) A low steam generator pressure of 550 psig for 2 seconds on at least two out of four steam generator specific pressure transmitters will:

1) Trip both MFDWP's.

2) Close MS-93 trip the TDEFDWP (if it is running) or prevent it from starting automatically. Also closes TO-145 to redundantly trip the pump by closing MS-95.

3) Close the main and startup feedwater block valves on the affected steam generator.

4) After five seconds, dose the main and startup feedwater control valves on the affected steam generator.

5) If later during the event it becomes necessary to use any main or startup valves to feed a steam generator, AFIS will have to be reset prior to using the valves by taking the ENABLE/OFF switch to the OFF position.

NQTE: Due to potential spurious actuation problems with AFES a trip confirm is required prior to the actual actuation of AFIS. This requires a STAR and a Trip Confirm STAR module of a digital channel to trip prior to actual actuation of the circuit. This now requires a 2 out of four times 2 logic to trip AFIS.

b) A QA-1 solenoid valve (TO-145) will be added into the hydraulic oil supply to MS-95. (AFIS6.vsd)

1) This will provide redundancy for MS-93.

2) If a MSLB were to occur in either SG the solenoid valve will energize and block the hydraulic oil supply to MS-95.

3) A limit switch from TO-145 will provide input to the controller for MS-87, which will prevent lifting of the relief valve following actuation of the MS-95 trip.

4) Power for the solenoid will be from KVIC, which is diverse from the MS-93 power supply.

5) A coil monitor relay will alarm on the OAC to indicate electrical problems. A local test switch will be installed to allow testing of TQ-145.

c) The TDEFWP control switch will be modified to add the AFIS ovenide interlock for TO-145. This will allow the operator to restart the TDEFWP as necessary to feed Steam Generators without resetting the AFIS signal.

Question 152 EAP081401 EAP081401

Unit 1 plant conditions:

Time = 0200
- Power = 100%

Time = 0202
- '1A' SG pressure = 100 psig
- '1B' SG pressure = 810 psig
- RB pressure = 11 psig
- PZR level = 5 9 and decreasing rapidly
- RCS pressure = 1400 psig and decreasing rapidly
- CETCs = 520°F and decreasing.

Which ONE of the following events will most likely result in the above indications?(.25)

A) Steam line break

B) Small break LOCA

C) PZR steam space break

D) Steam generator tube rupture

Answer 152
A)

A) Correct- Indications are present that indicate an Excessive heal transfer which is resulting in an overcooling event.
B) Incorrect- High containment pressure would be reached over a period of time, depending on break size. Pressurizer level would decrease due to the leak. RCS pressure would also decrease based on the teak. CETC's would not decrease based on a small break LOCA.
C) Incorrect - Should have high containment pressure over time. The Operator would not see a rapid change in CETC's. Pzr level would increase due to the steam space break. RCS pressure would decrease due to the insurge into the Pressurizer. RCS temperature would not decrease.
D) Incorrect- High containment pressure would not exist. A rapid change in CETC's would not be observed. Pzr level would decrease based on leak size. RCS pressure would not rapidly decrease.

1 POINT

Question 13

Which ONE of the following describes the reason a natural circulation cooldown is **NOT** initiated during a Station Blackout?

A. Station Batteries only provide 4 hours of backup power.

B. Voiding in the hot legs could block reactor coolant flow.

C. Voiding in the Reactor Vessel head area could occur.

D. RCS pressure and temperature instrumentation will be unavailable.

BACKWARDS LOGIC (NOT)

Question 13
T1/G1
055EK3.02, Station Blackout
Knowledge of the reasons for the following responses as the apply to the Station Blackout: Actions contained in EOP for loss of offsite and onsite power (4.3/4.6)

Answer: C

A. Incorrect. While the statement is true, it is not the reason a cocldown is not initiated since by design, power would be restored in < 4 hours.

B. Incorrect. Establishing the correct SG levels based on SCM can ensure SG cooling with voids in the hot legs.

C. Correct. Since head vents can not be opened, voiding in the head area could occur and eventually block Natural Circ flow.

D. Incorrect. All PAM instrumentation would still be available.

Technical Reference(s): EAP-BO

Proposed references to be provided to applicants during examination: None

Learning Objective: EAP-BO, R5

Question Source: Bank # EAP230501

Question History: Last NRC Exam _____

Question Ccgnitive Level: Memory or Fundamental Knowledge
Comprehension or Analysis

JECTI\

Terminal Objective

1. Demonstrate the ability *to* utilize the Blackout section of the EOP **to** mitigate a **loss** of all AC power.
2. Be able to explain the bases behind or reasons for steps performed in the Blackout Section of the EOP.

Enabling Objectives

1. Identify plant conditions that would require entry into the Blackout section **of** the EOP. (R1)
2. **List** the five major functions provided by the Blackout section *of* the EOP. (R2)
3. Analyze station conditions to determine the preferred source **of** coaling water for the Steam Generators. (R3)
4. Describe actions expected for steps directing the operator to "Initiate feeding and steaming available SG's as necessary to stabilize RCS P/T". (R4)
5. **Discuss the reason a natural circulation cooldown is not performed during blackout conditions. (R5)**
6. Analyze station conditions to determine the preferred source of **AC** power utilized by Enclosure 5.38, Restoration of Power to attempt to energize ES Switchgear. (R6)
7. Discuss the operational significance behind energizing Standby Bus #1 once it has been determined that power can not be restored to any ES Switchgear. (R7)
8. Discuss the operational significance behind shutting down the KI, KU, KX, & KOAC Inverters during a station blackout. (R8)
9. Discuss the operational significance behind shutting down the MFWP and Main Turbine EBOP's once they are no longer needed during a station blackout. (R9)
10. Explain why CC-8 is failed closed during a station blackout. (R10)
11. Identify instrumentation in the Control Room that would be utilized to determine the availability of the BWST **as** a suction source for an HPI Pump during blackout conditions. (R11)
12. Recognize that once an HPIP is aligned to the ASW switchgear, no amp or breaker indications will be available in the Control Room. (R12)

B. ***(Obj R5) A cooldown during a blackout would require a natural circulation cooldown. Doing a natural circulation cooldown would require opening the head vents. Since there is no power avaiiabie to the head vents during a blackout a Natural Circulation cooldown can not be performed therefore direction is given to stabilize RCS temperature and pressure.***

C. ***IF** the affected **units** TDEFWP is not available, the next choice **is** an alternate **units** EFDW system. Since this section of the EOP could be entered due to a blackout on this unit only, it is possible fhat another unit could provide EFDW.*

2.12 **IAAT** EFDW *form* any *source* **is** insufficient to *maintain stable* RCS P/T, ***THEN*** notify SSF *operator that feeding* SGs *with* **SSF ASW is** *required.*

A. ***As** MS **pressure** decreases with decay heat load, fhe availabie flow from **the** TDEFWP will also decrease. Once MS pressure reaches 250 psig, the **TDEFWP** may not be able **to** provide sufficient flow. Once sufficient **flow** is no longer available, guidance is given to utilize SSF **ASW** since **it is** the next most preferred source of water for the SGs.*

2.13 *Verify* Encl *5.38 (Restoration* of Power) *in progress or complete.*

RNO:

Notify *an* RO *to perform* Encl *5.38 (Restoration* of *Power).*

A. *The highest priority* of *actions at this time is to perform Enclosure 5.38 (Restoration of Power). If only one CRO **is** available, that CRO must perform **Encl.** 5.38 per the RNO. **If** 2 CROs are available then **Encl.** 5.38 can be performed in conjunction with additional actions required.*

INSTRUCTOR NOTE: Refer To Attachment #1 (Enclosure 5.38, Restoration of Power)

2.14 **IAAT** all 4160V **SWGR** (1TC, 1TD, 1TE) *are de-energized,* **AND** *Standby* **Bus #1** *is energized,* ***THEN GO TO*** *Step 15*

RNO:

GO TO *Step 78.*

IAAT all 4160V **SWGR** (1TC, 1TD, 1TE) *are de-energized for* 1.5 hours, **THEN** *dispatch an operator to perform* **End.** *5.17 (Generator Emergency Hydrogen Purge).*

A. *This step provides **a** method to depressurize and purge the generator during a station blackout prior to a **loss** of Seal Oil that would occur at the **4** hour mark.*

1 POINT

Question 14

Unit 3 plant conditions:

INITIAL CONDITIONS:
- Reactor power = 100%
- Pressurizer (PZR) bevel 1 selected
- 3HP-120 (RC Volume Control) in AUTOMATIC
- SASS in MANUAL

CURRENT CONDITIONS:
- ICCM Train "A" experiences a total loss of power

Which ONE of the following is correct?

PZR level indication _____, 3HP-120 _____, and _____.

A. fails low / fully opens / both PZR level High/Low and Emergency Hi/Low statalarms actuate.

B. fails as is / controls level as demanded by the failed instrument / the PZR level Emergency High/Low statalarm is inoperable.

C. swaps to Instrument #3 / controls level at setpoint / the PZR level Emergency High/Low statalarm remains operable.

D. stays selected to Instrument #1 / swaps to Manual / the PZR level Emergency HighlLow statalarm is inoperable.

Change Initial Conditions

Question 14
T1/G1

057AA2.12, Loss of Vital AC Instrument Bus:
Ability to determine and interpret the following as they apply to the boss of Vital AC Instrument Bus: PZR level controller, instrumentation, and heater indications
(3.5/3.7)

Answer: A

A. Correct - for power failure to ICCM train with SASS in manual.

B. Incorrect - would be correct for internal failure / testing of an ICCM train with SASS in manual.

C. Incorrect - SASS is in manual will not select another channel; does try to control level at setpoint (HP-120 fully opens); stated Statalarm actuates as it should.

D. Incorrect - does not swap to Manual; and Statalarms are still operable (are actuated; responding as they should)

Technical Reference(s):

Proposed references to be provided to applicants during examination: **None**

Learning Objective: **PNS-PZR, R35**

Question Source: **Bank # PNS143503**

Question History: Last NRC Exam _____

Question Cognitive bevel: Memory or Fundamental Knowledge
Comprehension or Analysis

12. Explain the operation of the Pressurizer Water Space Saturation Recovery Circuit. (R29)

13. Discuss the operation of the pressurizer heaters including: (R7)

    13.1 Three purposes of pressurizer heaters.

    13.2 Purpose and level of interlock associated with pressurizer heaters

14, Describe the physical operation of the PORV including what causes the Pilot Valve to operate and how this causes the PORV to open or close. (R8)

15. Explain the purpose of the two opening setpoints associated with the PORV. (R9)

16. Explain how to manually operate the PORV. (R37)

17. Given a set of conditions, determine operability of the PORV following a loss of power. (R30)

18. Discuss the reason for the pressurizer safeties and their setpoint. (812)

19. Given a set of plant conditions, determine the response of Pressurizer level. (R14)(R15)

20. Explain the operation of SASS as it relates to pressurizer Bevel control. (R31)

21. Given a set of conditions, determine how pressurizer level control/indication is affected by a loss of SASS andlor ICCM. (R35)

22. Discuss the use of Pressurizer Saturation Pressure Indication by the operator. (R16)

23. Discuss the forming of a pressurizer steam bubble including any precautions to be taken during the evolution. (R17)

24. Given a completed copy of PT/0/A/201/04 _RC66 Stroke Test apply compare data taken to acceptance criteria to determine PORV operability. (R10)(R11)

25. Differentiate between a pressurizer steam space leak and a water space leak. (R32)

26. Given a set of plant conditions, determine the position of the PORV. (813)

27. Given a set of conditions, calculate the expected PORV discharge temperature. (R34)

28. Given a copy of a Limit and Precaution from OP/A/1103/05, Pressurizer Operation, be able to state the reason for that limit and precaution. (818)

29. Apply ITS/SLC's rules to determine applicable Conditions and Required actions for a given set of Pressurizer conditions. (R24)

3. (OBJ.R35) Since the pressurizer levels deed through ICCM and the failure of an ICCM train can occur with SASS out of service (i.e., in manual), the operator must know how a failure of an ICCM train will affect pressurizer level control.

   a) boss of power (Data Link Failure indicated) with the selected pressurizer level feeding from the failed train and SASS unavailable.

      1) Plasma display indicates DATA LINK FAILURE.

      2) Indicated pressurizer level fails to zero.

      3) Pressurizer heaters cut off on low level.

      4) HP-120 opens.

      5) Pressurizer Emergency High/Low statalarm actuates (bow).

      6) Pressurizer HighlLow statalarm actuates (Low).

      7) Aux. Shutdown Panel pressurizer level indicates zero.

   b) Internal failure of ICCM or removal from service (testing) by I&E, with the selected pressurizer level feeding from the affected train and *SASS* unavailable.

      1) Plasma display indicates DATA LINK FAILURE.

      2) Pressurizer level "fails as is / freezes".

      3) Pressurizer heater low level cut off is inoperable.

      4) HP-120 responds to the error (may or may not open) between failed (as is) pressurizer level and pressurizer level setpoint.

      5) Pressurizer Emergency HighlLow statalarm is inoperable.

      6) ASDP pressurizer level failed as is.

   c) Pzr Heater Bank 2 -Group B Bank 2 heaters are operable when (1)(2)(3) XSF is powered from the SSF. But if (1)(2)(3) XSF is powered from (1)(2)(3)X8 (which it normally is), the pressurizer low level cut off will prevent operation (assuming the selected pressurizes level is from a failed ICCM Train).

      1) When powered from the SSF, BK2/Grp B will cutoff at 105.

Question 270 PNS143503 PNS143503Unit 3 plant conditions:

INITIAL CONDTIONS:

- Reactor power = 100%
- Pressurizer (PZR) Level 1 selected
- 3HP-120 (RC Volume Control) in AUTOMATIC
- SASS in MANUAL

CURRENT CONDITIONS:

- ICCM Train "A" experiences a total loss ad power

Which ONE of the following is correct? (.25)

PZR level indication _____, 3HP-120 _____, and _____.

A) fails low / fully opens / both PZR level HighlLow and Emergency Hi/Low statalarms actuate.

B) fails as is / controls level as demanded by the failed instrument / the PZR level Emergency High/Low statalarm is inoperable.

C) swaps to Instrument#3 / controls level at setpoint / the PZR level Emergency HighlLow statalarm remains operable.

D) stays selected to Instrument#1 / swaps to Manual / the PZR level Emergency High/Low statalarm is inoperable.

Answer 270
A

A. Correct - for power failure to ICCM train with SASS in manual.
B. Incorrect - would be correct for internal failure / testing of an ICCM train with SASS in manual.
C. Incorrect - SASS is in manual will not select another channel; does try to control level at setpoint (HP-120 fully opens); stated statalarm actuates as it should.
D. Incorrect - does not swap to Manual; and statalarms are still operable (are actuated; responding as they should)

1 POINT

Question 15

Plant conditions:

INITIAL CONDITIONS:

- Unit 1,2,&3 DC systems have been separated using OP/0/A/1107/08, Isolation of DC Systems Between Units

CURRENT CONDITIONS:

- 1CA Battery charger fails

Which ONE of the following will supply power to 1DIA panelboard?

ASSUME **NO** OPERATOR ACTIONS

A. 1CA Battery

B. 1CS Battery Charger

C. 1DCB bus

D. Unit 2 DC bus

Replace

Question 15
T1/G1

058AA1.03, Loss of DC Power
Ability to operate and / or monitor the following as they apply to the Loss of DC Power: Vital and battery bus components (3.1/3.3)

Answer: A

A. Correct, when the charger fails the 1CA battery will supply the 1DIA panelboard.

B. Incorrect. 1CS Battery Charger is not normally aligned to the buses. Would be true if the 1CA charger was out of service.

C. Incorrect. The vital panelboards are not aligned to the units opposite DC bus.

D. Incorrect. With the Unit 1,2,&3 DC systems separated, Unit 2 is unable to supply power to Unit 1

Technical Reference(s):

Proposed references to be provided to applicants during examination: **None**

Learning Objective: **EL-DCD, R4**

Question Source: **Bank # EL020406**

Question History: bast NRC Exam _____

Question Cognitive bevel: Memory or Fundamental Knowledge
Comprehension or Analysis

5. Briefly discuss the Vital DC Instrument and Control System operation including: (R4)

   5.4 Purpose of the System

   5.2 Six typical loads

   5.3 The way power is normally supplied to the buses

   5.4 How power is supplied in the event of a charger failure.

   5.5 How power may be supplied from another unit.

   5.6 Reason for tying DCA and DCB buses together before removing a battery from service

   5.7 The power supplies to Vital I&C Battery Chargers.

   5.8 How to perform a battery ground test.

   5.9 Separating buses between units for ground location.

   5.10 Location of the batteries, battery chargers, distribution centers, DC panelboards and Isolating Diode Assemblies.

6. Briefly describe the Essential DC Power System operation including: (R6)

   6.1 The normal source of power to the system.

   6.2 Two alternate sources of power to each bus.

   6.3 The loads supplied by the system.

   6.4 Location of the Isolating Diode Assemblies

7. Briefly discuss the Power Battery System Operation including: (R7)

   7.1 Purpose of the system

   7.2 Battery bank and distribution network

   7.3 How 250 VDC is achieved on the system.

   7.4 Ten loads supplied from the system.

   7.5 The location of the battery banks and chargers

   7.6 Taking a power battery bank out of service, and the considerations involved.

8. Briefly describe the 230 KV Switchyard DC Power System, including: (R8)

   8.1 Purpose of the system

   8.2 Batteries, chargers and distribution network

Question 37 EL020406 EL020406

Plant conditions:

INITIAL CONDITIONS:

- Unit 1,2,&3 DC systems have been separated using OP/0/A/1107/08, Isolation of DC Systems Between Units

CURRENT CONDITIONS:

- 1CA Battery charges fails

Which ONE of the following will supply power to 1DIA panelboard? (.25)

(Assume no operator actions)

A. 1CA Battery

B. 1CS Battery Charges

C. 1DCB bus

5. Unit 2 DC bus

Answer 37
A
A. Correct
B. Incorrect. 1CS Battery Charger is not normally aligned to the buses.
C. Incorrect. The vital panelboards are not aligned to the units opposite DC bus.
D. Incorrect. With the Unit 1,2,&3 DC systems separated, Unit 2 is unable to supply power to Unit 1

1 POINT

Question 16

Unit 1 plant conditions:

INITIAL CONDITIONS:
- Reactor power = 100%

CURRENT CONDITIONS:
- Reactor power = 40% decreasing
- "1A" Main Steam Line Pressure = 950 psig and slowly decreasing
- "1B" Main Steam Line Pressure = 105 psig and decreasing
- BOTH Main FDW pumps tripped
- RCS Temperature = 505°F and decreasing
- Core SCM = 0°F
- OATC is performing Immediate Manual Actions (IMAs)
- BOP is performing a Symptoms Check

Which ONE of the following is correct?

The BOP operator should perform _____ and the OATC should _____

A. Rule 1 (ATWS/Unanticipated Nuclear Power Production) / complete IMAs

B. Rule 2 (Loss of SCM) / Rule 1 (ATWS/Unanticipated Nuclear Power Production)

C. Rule 3 (Loss of Main or Emergency FDW) / Rule 1 (ATWS/Unanticipated Nuclear Power Production)

D. Rule 5 (Main Steam Line Break) / complete IMAs

Question 16
T1/G1

BE10EA2.1, Post-Trip Stabilization
Ability to operate and / or monitor the following as they apply to the (Post-Trip Stabilization): Facility conditions and selection of appropriate procedures during abnormal and emergency operations. (2.5/4.0)

Answer: B

A. Incorrect, although Rule 1 has the highest priority at this time, it will be performed by the OATC. Completing IMAs would be correct if the reactor was shut clown.

B. Correct, the BOP should determine that boss of SCM is the highest priority symptom at this time (other than ATWS which will be performed by the OATC). During performance of IMAs the OATC should determine that the reactor has not tripped. He should then perform Rule 1(ATWS/Unanticipated Nuclear Power Production)

C. Incorrect, Rule 3 (Loss of Main or Emergency FDW) would be correct if SCM was not zero and EFDW was also lost. The second part is correct.

D. Incorrect, Rule 5 (Main Steam Line Break) would be correct if SCM was not zero. Completing IMAs would be correct if the reactor was shut down.

Technical Reference(s):

Proposed references to be provided to applicants during examination: None

Learning Objective: EAP-EOP - R20, R27

Question Source: NEW

Question History: Last NRC Exam _____

Question Cognitive bevel: Memory or Fundamental Knowledge
Comprehension or Analysis

2. **List the specific crew responsibilities/functions for each position in the Control Room during EOP usage. (R20)**

   2.1 **Operations Shift Manager**

   2.2 **STA**

   2.3 **Control Room SRO/Procedure Director**

   2.4 **Additional licensed SRO personnel**

   2.5 **Reactor Operator**

      A. **OATC**

      B. **BOP**

   2.6 **NEOs**

   2.7 **All licensed operators**

3. **Describe the conditions required for the PD to deviate from approved procedure when using the EQP or an AP. (R30)**

4. **Describe how "Rules", are performed. (R27)**

5. Discuss the use of Parallel Actions when making transfers based on symptoms that occur when plant conditions change. (R21)

6. Demonstrate the ability to property sequence the EOP Sections based on their EOP mitigating hierarchy or priority. (R26)

7. Evaluate a set of plant conditions and determine if an EOP transfer should take place based on the Parallel Actions guidance. (R22)

8. Describe the required actions and options in priority the PD can use if plant conditions significantly change during EQP usage. (R29)

9. Evaluate "IF/THEN" conditional statements and "AND/OR" logic statements and determine which ones are applicable during progression through the EOP. (R8)

10. Describe how "IF AT ANY TIME" conditional statements are performed. (R9)

11. Describe how "WHEN, THEN" hold statements are performed. (R28)

12. Compare the use of a "NOTE to that of a "CAUTION" statement. (R10)

13. Describe how "Perform", "Initiate", and "GO TO" statement are performed. (R11)

2) If 10 CFR 50.54(x) is invoked:

(a) A Unit Log entry shall be made to document the actions taken and the existence of the conditions requiring the actions.

(b) Notify the NRC Operations Center per 10 CFR 50.72 within 1 hour per OMP 2-14, Notifications.

3) Actions implemented from Oconee Severe Accident Guideline (OSAG) require invoking 10 CFR 50.54(x).

12. Ensure Abnormal/Emergency conditions are announced on the P.A. system using Plant Announcement if resources are availabie.

13. The PD does not assume any other duties and shall not operate controls.

D. Additional Licensed SRO Personnel

1. The Plant SRO, Work Control Center SRO and any other On-shift, or Off-shift SROs report to the OSM or PD on the affected unit for assignment.

2. If the OSM or STA is performing the OVERSIGHT function, the Plant SRO may assist in plant operations as directed by the OSM or PD.

3. The Plant SRO shall not operate controls or acknowledge alarms if he/she is the only person performing the OVERSIGHT function on a unit.

4. Individuals who do not have a current or active license shall not be assigned licensed operator tasks or duties.

E. Reactor Operators

1. Operator-at-the-Controls (OATC)

a) Perform all Immediate Manual Actions and any contingency actions following a reactor trip from memory.

b) **Perform SYMPTOM CHECKS, applicable Rules, and licensed operator memory items as needed after reactor trip Immediate Manual Actions are verified.**

c) Maintain in-progress EOP Rules/Enclosures in the appropriate CR binder to facilitate STNSRO review.

d) Identify applicable IAAT steps (circle IAAT step number) on the colored AP/EOP IAAT sheets.

e) Monitor for conditions of applicable IAAT steps and inform the PD if conditions are met.

9 Monitor plant parameters during ABNORMAUEMERGENCY EVENTS.

2. Balance-Of-Plant (BOP) operator

   a) **Perform SYMPTOM CHECKS, applicable Rules, and licensed operator memory items as needed after a reactor trip.**

   b) Maintain in-progress EOP Rules/Enclosures in the appropriate CR binder to facilitate STA/SRO review.

   c) Identify applicable IAAT steps (circle IAAT step number) on the colored AP/EOP IAAT sheets.

   d) Monitor for conditions of applicable IAAT steps and inform the PD if conditions are met.

F. Nuclear Equipment Operators

   a) Report to the Control Room:

      1) Upon entry into specified APs

      2) Upon entry into the EOP

      3) When directed by the PD during an ABNORMAL EVENT

   b) Limit individual exposures during a LOCA or SGTR to the Emergency Worker Exposure Limits.

G. All Licensed Operators

   1. All licensed operators are expected to memorize the Licensed Operator Memory Items contained in OMPI-I&2 Attachment A.

2.3 EOP layout:

A. Entry Conditions

B. Automatic Actions

C. Immediate Manual Actions

D. Subsequent Actions

E. Diagnostic Tabs (8) - Diagnostic section that stabilizes the plant and diagnoses the problem.

   1. Unanticipated Nuclear Power Production (UNPP)

   2. Blackout (BO)

   3. Inadequate Core Cooling (ICC)

   4. Loss of Subcooling Margin (LSCM)

   5. Loss of Heat Transfer (LHT)

   6. Excessive Heat Transfer (EHT)

   7. Steam Generator Tube Rupture (SGTR)

   8. Turbine Building Flood (TBF)

1 POINT

Question 17

Unit **1** plant conditions:

INITIAL CONDITIONS:
- Reactor power = 100%
- "1B" Main steam line break in reactor building

CURRENT CONDITIONS:
- "1A" Main Steam Line Pressure = 950 psig and slowly decreasing
- "1B" Main Steam Line Pressure = 105 psig and slowly increasing
- BOTH Main FDW pumps tripped
- 1A MD EFDWP operating
- 1B MD EFDWP tripped
- TD EFDWP operating
- Pzr level = 0"
- Condenser vacuum = 5" Hg and stable
- RCS pressure = 2535 psig and decreasing
- RCS Temperature = 505°F and decreasing

Which ONE of the following is correct?

RCS overcooling_____ been stopped and the _____

A. has NOT / the TD EFDWP should be tripped

B. has NOT / the 1A MD EFDWP should be tripped

C. has / TBVs should be adjusted to maintain CETCs constant

D. has / ADVs should be adjusted to maintain CETCs constant

Question 17
T1/G1
BE05EA1.3, Excessive Heat Transfer
Ability to operate and / or monitor the following as they apply to the (Excessive Heat Transfer): Desired operating results during abnormal and emergency situations. (3.8/4.2)

Answer: A

A. Correct, the overcooling has NOT been stopped as indicated by RCS pressure and temperature decreasing. The TD EFDWP should be tripped. AFIS should have tripped the TD.

B. Incorrect, first part correct. The overcooling has NOT been stopped as indicated by RCS pressure and temperature decreasing. The A MD EFDWP should NOT be tripped. It is feed the intact SG. This would correct if the steam line break was in the "B" SG.

C. Incorrect, first part incorrect. The overcooling has NOT been stopped as indicated by RCS pressure and temperature decreasing. Second part would be correct if condenser vacuum was greater than 7" Hg.

D. Incorrect, first part incorrect. The overcooling has NOT been stopped as indicated by RCS pressure and temperature decreasing. Second part is correct. Since condenser vacuum is less than 7" Hg SG pressure will be controlled with the ADVs.

Technical Reference(s):

Proposed references to be provided to applicants during examination: None

Learning Objective: EAP-EHT, R14

Question Source: NEW

Question History: bast NRC Exam _____

Question Cognitive Level: Memory or Fundamental Knowledge
Comprehension or Analysis

OBJECTIVES

TERMINAL OBJECTIVE

1. Describe the use of Excessive Heat Transfer (EHT) of the EOP in order to perform the required actions of a Control Room Operating crew during an event involving an excessive heat transfer transient and provide the operators guidance to properly use and understand the steps within the EHT section of the EOP. (T1)

ENABLING OBJECTIVES

1. Describe the conditions that would require entry into EHT. (R1)

2. Discuss the overall mitigation strategy of EHT. (83)

3. Recognize that pressurized thermal shock conditions may develop if HPI flow is not appropriately throttled during an overcooling event. (R2)

4. Recognize that a transfer to Loss of Subcooling Margin section, following an excessive heat transfer event, is made pes the parallel actions step if any SCM is reading 0°F and HPI forced cooling is NOT in progress. (R6)

5. Explain the possible personnel safety hazard involved with reestablishing feedwater to a SG with a MS line leak; discuss the precautions that should be taken before feeding the SG. (84)

6. Explain the concern involved with reestablishing feedwater to an intact SG that is dry. (R5)

7. Describe the bases for securing the RBS System when RB pressure <10 psig if the Reactor Building radiation levels are normal. (R7)

8. Explain the basis for cautions, notes and major steps in EHT. (R8)

9. Given plant conditions, determine appropriate actions based on EHT section of the EQP. (813)

10. Given plant conditions, determine appropriate actions based on Rule 5 (MSLB). (R14)

11. Define "Pressurized Thermal Shock". (R10)

12. Explain why the NDT curve does not have to be violated to run the risk of brittle fracture to the reactor vessel. (R1 1)

13. Given plant conditions, demonstrate the ability to determine any Rule 8 (PTS) requirements. (R12)

1 POINT

Question 18

Unit 1 plant conditions:

INITIAL CONDITIONS:
- Reactor power = 100%

CURRENT CONDITIONS:
- Loss of Main FDW
- Loss of ALL EFDW

Which ONE of the following is correct concerning the first hour of this event?

ASSUME NO OPERATOR ACTIONS TAKEN

A. PZR level will initially decrease and then stabilize at approximately 220".

B. Decay heat will initially be removed via TBVs and then by the PORV cycling.

C. RCS pressure will initially decrease and then stabilize at approximately 2155 psig.

D. ES channels 1 and 2 will initially actuate on low RCS pressure and eventually ES channels 3-6 may actuate on high RB pressure.

Look at closer

Question 48
T1/G1

BE04EA1.1, Inadequate Heat Transfer
Ability to operate and / or monitor the following as they apply to the (Inadequate Heat Transfer): Components, and functions of control and safety systems, including instrumentation, signals, interlocks, failure modes, and automatic and manual features. (4.4/4.2)

Answer: B

A. Incorrect, PZR level will initially decrease on the reactor trip. After the trip the RCS will heat up due to no water feeding the SGs. This will cause PZR level to increase, eventually going solid.

B. Correct, decay heat will initially be removed via TBVs and then by the BQRV cycling. Until the existing water is steamed from the SGs the TBVs will remove core heat. After the SGs are dry the RCS will heat up and pressurize until the PORV lifts. The PORV will continue to cycle removing decay heat until RCS inventory is depleted.

C. Incorrect, RCS pressure will initially decrease on the reactor trip due to PZR level decreasing. After the trip the RCS will heat up due to no water feeding the SGs. This will cause PZR level Io increase, eventually going solid. As a result RCS pressure will also increase.

D. incorrect, although RCS pressure will initially decrease on the reactor trip it will not decrease to the ES channel 1&2 actuation setpoint. Eventually while the PORV is cycling the QT will rupture and which will put steam in the RB. RB pressure may increase to the ES 1-6 actuation setpoint on high RB pressure.

Technical Reference(s):

Proposed references to be provided to applicants during examination: None

Learning Objective: EAP-LOHT, R24

Question Source: NEW

Question History: Last NRC Exam _____

Question Cognitive Level: Memory or Fundamental Knowledge
Comprehension or Analysis

OBJECTIVES

TERMINAL OBJECTIVE

1. Describe the use of Loss of Heat Transfer tab of the Emergency Operating Procedure in order to perform the required actions of a Control Room operating crew in an event involving a loss of heat transfer. (TI)

ENABLING OBJECTIVES

1. Describe the conditions that would require entry into LWT. (R23)
2. Discuss the overall mitigation strategy of LHT. (R24)
3. Explain the basis for cautions, notes and major steps in LHT. (R25)
4. Given plant conditions, determine appropriate actions based on Rule 3 (Loss of Main or EFBW). (R26)
5. Given plant conditions, determine appropriate actions based on Enclosure 5.27 (Alternate Methods For Controlling EFBW Flow). (R30)
6. Given plant conditions, determine appropriate actions based on Enclosure 5.26 (Manual Start of the TDEFDWPT). (R29)
7. Describe, in general, the correct method for establishing SG feed supplied by the CBPs in order to maintain system temperatures until EFDW can be restored. (R6)

   7.1 Recognize that "CBPs available" implies that CBPs should be started (if not already running) if system conditions allow.

8. Explain why an excessive RCS cooldown would result when feeding SGs with the CBPs if a level were established. (R7)
9. State when and how HPI forced cooling should be initiated following a loss of all sources of feedwater. (R1)
10. Given plant conditions, determine appropriate actions based on Rule 4 (Initiation of HPI Forced Cooling). (R28)
11. Recognize that limiting the number of running RCPs to one per loop can reduce heat input to the RCS. (R2)
12. Describe the basis for securing all but one RCP when in the HPI forced cooling mode. (R10)
13. Explain why the RCS high point vents must be opened if HPI cooling is not effective. (R19)

1 POINT

Question 19

Unit **1** plant condition:

INITIAL CONDITIONS:
- Withdrawing Control Rods (CRs) to ECP

CURRENT CONDITIONS:
- 1SA-02/B-7 (NI 2 Rod Withdrawal Inhibit)

Which ONE of the following is correct?

This alarm actuates at _____ DPM startup rate and the operator is required to_____

A. **1** / initiate emergency boration

B. 2 **/** initiate emergency boration

C. **1** **/** insert CRs until alarm clears

D. 2 / insert CRs until alarm clears

Rewrite

Question 19
T1/G2

001AG2.4.31, Continuous Rod Withdrawal
Knowledge of annunciations alarms and indications and use of the response instructions. (3.3/3.4)

Answer: D

A. Incorrect, first part incorrect. Rod Withdrawal Inhibit Statalarm comes in at 2 DPM. 1 DPM is the procedural SUR limit. Second part incorrect. Emergency boration is not required. Rule 1 (ATWS/Unanticipated Nuclear Power Production) does require emergency boration.

B. Incorrect, first part correct. Second part incorrect. Emergency boration is not required. Rule 1 (ATWS/Unanticipated Nuclear Power Production) does require emergency boration.

C. Incorrect, first part incorrect. Rod Withdrawal Inhibit Statalarm comes in at 2 DPM. Second part correct. 1 DPM is the procedural SUR limit. Alarm Response Guide directs the operator to insert CR to clear the alarm.

D. Correct, Rod Withdrawal Inhibit Statalarm comes in at 2 DPM. Alarm Response Guide directs the operator to insert CR to clear the alarm.

Technical Reference(s):

Proposed references to be provided tu applicants during examination: **None**

Learning Objective: **IC-NI, R12**

Question Source: **NEW**

Question History: Last NRC Exam _____

Question Cognitive Level: **Memory or Fundamental Knowledge**
Comprehension or Analysis

ARA-2

TRAINING OBJECTIVES

TERMINAL OBJECTIVE

At the completion of this lecture the student will be able to explain the principles of operation, the output functions and the components used in operating the out of core Nuclear Instruments.

ENABLING OBJECTIVES

1. Describe the purposes of Nuclear Instrumentation. (R1)

2. Explain the TWO neutron reactions utilized at ONS for detection of thermal neutrons, and why these reactions with "target nuclei" are necessary in order to monitor neutron flux. (R2)

3. Identify the TWO adverse environmental conditions the Gamma-Metics NIs are designed to withstand. (R3)

4. Discuss the ranges of the Source and Wide Range detectors and the location of the detectors with respect to the care. (R4)

5. Explain the type of detector utilized by the Source and Wide Range, including how these detectors operate. (R5)

6. Explain how sensitivity is increased in the Source Range Instruments. (R6)

7. Identify the fact *that* at ≈ 4E-3% power, the Wide Range circuitry "swaps over" from a "pulse counting" mode to the Campbelling mode of operation in order to derive Reactor power and explain why this is necessary. (R7)

8. Explain why the Source range detector is NOT de-energized during power operation when the Source Range is overranged. (R8)

9. Discuss the fact that alpha, gamma, and neutron pulses are produced in an Uncompensated Fission chamber and explain how and why the circuitry distinguishes between these sources. (R9)

10. Identify the outputs from the Source and Wide Range Signal Processor. (R10)

11. Concerning the High Startup Rate Rod Withdrawal Inhibit:

    11.1 List the source(s) which may provide input to the Inhibit circuitry. (R11)

    11.2 The setpoint associated with the Inhibit, including the point at which the signal resets. (R12)

    11.3 The function provided by the Inhibit. (R13)

(1) Dixon's will indicate power level and Rate of Change (-1 to +7 DPM) for NI-1,2,3,& 4 SR and WR.

(i) NI-1,2,3,& 4 SR meters are grouped together and NI-12,3,& 4 WR meters are grouped together.

(ii) NI-1,2,3,& 4 Wide Range meters are designated as PAM indication.

(iii) The signal from NI-3 WR is also fed to a new safety related chart recorder on VB2

(d) Chessell Recorder on UB1

(e) Scalar output (random pulse) to Refueling Booth area

(f) Provides for the following control functions:

(1) (Obj. R11,12,13)High Startup Rate Rod Withdrawal Inhibit which stops outward rod motion in the event a SUR ≥ 2 DPM. (resets at .5 DPM.) (Refer to Handout *OC-IC-NI-7*)

- this will occur anytime regardless of power level
- fed from any Wide Range SUR
- causes statalarm

(2) gives red indicator light on Wide Range Monitor section of respective RPS cabinet (AI, BI, C1, D1)

1. (Obj. R14)Input to Rx Building Evacuation Alarm (from all four SR level signals). Alarm is adjustable by I&E and is normally set at 1/2 decade above background. (Also gives red indicator light on Wide Range Monitor section of respective RPS cabinet (A1, B1,C1,D1)).

d) (Obj. R16) Isolator

1) All outputs from the Signal Processor pass thru an Isolator. The purpose of the Isolator is to isolate the Signal Processor from a "downstream" fault in one of the output devices.

2.3) (Obj. R5) Power Range Instrument Channels(NI-5, 6, 7, 8 & 9) (Refer to *OC-IC-NI-8*)

A. The Power Range covers over two decades from 1% to 125% power.

B. Four identical, independent channels to provide redundancy for input to the reactor protective system.

1 POINT

Question 20

Unit 1 plant conditions:

INITIAL CONDITIONS:
- Reactor power = 100%

CURRENT CONDITIONS:
- Reactor power = 3% decreasing 1%
- Rod *6* Group **4** indicates 63% withdrawn
- All other Control Rods indicate fully inserted

The reactor operator should perform which ONE of the following required actions?

A. Notify the SRO to **GO TO** UNPP Tab.

B. Insert regulating rods to the IN LIMIT.

C. Open 1HP-24/25 (1A/1B HPI BWST SUCTION).

D. Dispatch an operator to open 600V CRD breakers.

Question 20
T1/G2
005AG2.4.6, Inoperable/Stuck Control Rod
Know
Knowledge symptom based EOP mitigation strategies. (3.1/4.0)

Answer: C

A. incorrect, if reactor power was > than 5% the OATC would perform Rule 1, which would have the OATC "Notify the SRO to **GO TO** UNPP Tab". Because reactor power is < 5% Rule 1 is not performed.

B. Incorrect, if reactor power was ≥ than 5% the OATC would perform Rule 1, which would have the OATC "Insert regulating rods to the IN LIMIT". Also the RNO step for Step 1 of Subsequent Actions would perform this step if the CRDs are energized.

C. Correct, the first step of subsequent actions will direct the opening of 1HP-24/25 if all control rods are not fully inserted. Rule 1 is not entered because reactor power is less than 5%.

D. Incorrect, if reactor power was ≥ than 5% the OATC would perform Rule 1, which would have the OATC "Dispatch an operator to open 600V CRD breakers". Also the RNO step for Step 1 **of** Subsequent Actions would perform this step if the CRDs are energized.

Technical Reference(s): **EQP, Subsequent Actions**

Proposed references to be provided to applicants during examination: **None**

Learning Objective: **EAP-SA, R1**

Question Source: **NEW**

Question History: bast NRC Exam _____

Question Cognitive Level: Memory or Fundamental Knowledge
Comprehension or Analysis

OBJECTIVES

TERMINAL OBJECTIVES

1. Be able to describe how to properly perform or verify each step in Immediate Manual Actions and Subsequent Actions of the EOP.

2. Be able to explain the bases behind specified steps contained in Immediate Manual Actions and Subsequent Actions, of the EOP.

ENABLING OBJECTIVES

1. State the initiating events or entry conditions which the EOP is designed to provide the guidance for placing and maintaining the reactor in a safe condition following that event, i.e., the purpose of the EOP (R21)

2. Be familiar with the Automatic Systems Actions listed in the EOP. (R23)

3. Recognize that the Immediate Manual Actions and Symptom Checks of the EOQ shall be performed from memory and be able to state these actions. (R24)

4. Given a set of conditions be able to determine: (R1)

   4.1 If the reactor is properly shutdown

   4.2 Operator actions to be taken if reactor power is > 5%

   4.3 Operator actions to be taken if a stuck rod has occurred

   4.4 When RCS boration from the BWST can be secured when the reactor was not properly shutdown

5. Describe the following: (R2)

   5.1 Operator action to trip the Main Turbine and how to determine the Main Turbine has actually tripped.

   5.2 How to remove the Main Turbine from operation if all the stop valves don't close upon trip actuation

   5.3 The significance of ensuring that the Main Turbine and Generator trips for "Normal" post trip mitigation of a reactor trip

6. Given a set of conditions determine if ICS is properly controlling Main FDW following a reactor trip. (R4)

7. Explain why the flow rate to establish the usual post trip SG level setpoint for natural circ. could be too high, what indications would alert the operator to this condition; and for given plant conditions explain the proper actions that should be taken. (R6)

3.6 IMA's

A. Depress the REACTOR TRIP pushbutton

1. The operator will depress the manual reactor trip pushbutton even if the reactor is already tripped and observe PI indication to ensure that the rods have inserted.

B. (OBJ R1)Verify reactor power < 5% FP and decreasing

1. NI's are checked to perform this step

2. If *ANY* Power Range NI is > 5% then perform the RNQ

RNO: GO TO Rule 1 (ATWS/Unanticipated Nuclear Power Production).

a) (OBJ R1) After the UNPP section is complete a transfer back to SA will occur.

Question:

When can boratisn of the RCS be stopped following an ATWS, or if a reactor trip has occurred and all rods are not inserted but reactor power is < 5%?

ANSWER:

During an ATWS When PR NIs are not ≥ 5% or an unexpected increase in neutron flux is not observed a maximum addition of boron to the RCS is performed. WHEN ≥ 1% SDM is established, THEN stop boron addition. (Step 14 of Rule 1)

During an ATWS when PR NIs are ≥ 5% a manual rod insertion is begun and emergency boratisn commenced. The RO will direct the PD to enter the UNPP tab. The UNPP tab will allow throttling of HPI per Rule 6, (HPI Throttling Limits) if all of the following criteria are met:

Rx power is < 1%
Core SCM > 0
Pzr level > 100" [180" acc]

During a stuck rod event, a maximum boration is started. Step 4.14 of the SAs in the RNO column will direct the operator to Encl 5.5 Pzr and LDST Level control where step 12 will allow the boration to stop if all of the following criteria are met::

Makeup from the BWST is NOT required
LDST level is > 55 inches
All control rods inserted
Cooldown plateau NOT being used
Then 1HP-24 and 1HP-25 can be closed

1 POINT

Question 21

Which ON€ of the following **is** correct?

_____ decade(s) of overlap between the Source Range (SR) and Wide Range (WR) is required before the SR is _____

A. One / overranged

B. One / de-energized

C. Two / overranged

D. Two / de-energized

Correct

Question 21
T1/G2

032AA2.04, Loss of Source Range Nuclear Instrumentation
Ability to operate and / or monitor the following as they apply to the Loss of Source Range Nuclear Instrumentation: Satisfactory source-range/intermediate-ranae overlap (3.1/3.5)

Answer: A

A. Correct, one decade of overlap between the Source Range (SR) and Wide Range (WR) is required before the SR is over ranged.

B. Incorrect, first part is correct. Second part was correct for the old NIs. The new NIs do not require the SR to be de-energized at high power.

C. Incorrect, first part incorrect. Two decades were required between the SR and IR before the new NIs were installed. Second part is correct.

D. Incorrect, first part incorrect. Two decades were required between the SR and IR before the new NIs were installed. Second part is incorrect. Second part was correct for the old NIs. The new NIs do not require the SR to be de-energized at high power.

Technical Reference(s): **PT/0600/030**

Proposed references to be provided to applicants during examination: **None**

Learning Objective: **RT-CM02, R5**

Question Source: **NEW**

Question History: Last NRC Exam _____

Question Cognitive Level: **Memory or Fundamental Knowledge**
Comprehension or Analysis

OBJECTIVES

Terminal Objective

1. Utilizing Operating Procedures, discuss a reactor startup from subcritical with all Safety Rods withdrawn to power operation of approximately 3% rated power.

Enabling Objectives

1. Explain the requirements for making MODE changes during the startup. (R1)

2. Discuss the requirements and roles and responsibilities as specified in OP/0/A/1102/26, Pre-job Briefing, enclosure: Pre-job Brief for Reactor Startup. (R2)

3. Explain the use of a 1/M plot conducted per the Reactivity Balance Procedure from the point of alt Safety Rods out to close-out of the 1/M plot. (R3)

4. Explain how the regulating control rods are withdrawn to achieve criticality in accordance with OP/1/A/1102/01, Controlling Procedure for Unit Startup. (R4)

   4.1 State the proper actions that should be taken in the event the SRO becomes unavaitabte during the approach to criticality.

   4.2 Recognize that the RO is required to announce all manual reactivity changes (rods, water, acid, etc.) to the SRO and receive repeat-back prior to making the reactivity change.

   4.3 State the proper actions that should be taken in the event that a stable SUR of 1 DPM is exceeded.

   4.4 State the proper actions that should be taken in the event criticality cannot be achieved within ± 0.75% AWK of the ECP.

5. Discuss the use of control room instrumentation to achieve criticality in accordance with OP/1/A/1102/01, Controlling Procedure for Unit Startup. (R5)

   5.1 Verify proper overlap between the operating rod groups (Regulating Rod Groups 5-7) while on the approach to criticality using the OAC and the Control Rod Position Indication Panel.

   5.2 Recognize instrument responses that indicate criticality has been achieved.

   5.3 Verify proper overlap between Source Range Indication and the Wide Range Indication while on the approach to criticality.

6. Discuss the recording of Critical data per Operating Procedures. (R6)

   6.1 Why critical data is recorded.

   6.2 Why the data is recorded at .01% power.

1 POINT

Question 22

Unit 1 plant conditions:

- 1SA-3/B6 (FIRE ALARM) actuates
- Operator responds to the fire alarm cabinet:
  - ACKNOWLEDGE switch **is** depressed
  - Alarm remains in the alarm state

Which ONE of the following describes the operator's FIRST (next) response?

A. Dispatch an operator to the location of the alarm.

B. Dispatch the Fire Brigade to the location of the alarm

C. Notify the OSM and STA *to* report to *the* control *room*

D. Refer to the Fire Plan and RP/1000/29, Fire Brigade Response.

Look @ Further

ASK Gauge

Question 22

T1G2
067A
Know
Fire c

067AK3.04, Plant Fire on Site:
Knowledge of the reasons for the following responses as they apply to the Plant Fire on Site: Actions contained in EOP for plant fire on site (3.3/4.1)

Answer: A

A. Correct - the first response of the RO after acknowledging the fire alarm cabinet is to dispatch an operator to the location of the alarm and verify the validity of the alarm.

B. Incorrect - This is an action but not the first action

C. Incorrect - This is an action but not the first action

D. Incorrect - This is an action but not the first action

Technical Reference(s): 1SA-3/B6 FIRE ALARM

Proposed references to be provided to applicants during examination: None

beaming Objective: IC-FDS, R06

Question Source: Bank # IC040606

Question History: Last NRC Exam _____

Question Cognitive Level: Memory or Fundamental Knowledge
Comprehension or Analysis

TRAINING OBJECTIVES

TERMINAL OBJECTIVE

1. Describe the basic design and operation of the fire detection systems used at Oconee Nuclear Station.

2. Describe proper response of a non-licensed or a licensed operator following the receipt of a fire alarm.

ENABLING OBJECTIVES

3. State the purpose of the plant, SSF and KHS fire detection systems. (R1)

4. Briefly describe the two types of detectors utilized in the ONS fire detection system, including: (R2)

   4.1 The advantages and disadvantages of the ionization type fire detectors

5. Briefly describe the design and operation of the plant fire detection system. (R3)

   5.1 The operation of the neon bulbs located in the ionization type fire detectors.

6. List the general types of areas in the plant that are covered by the plant fire detector system. (R4)

7. Briefly discuss the proper actions of the operator sent to investigate a fire alarm on the plant fire detector system. (R5)

8. **Discuss briefly the proper actions and the reasons for these actions of the control room operator, should the fire alarm annunciator in the control room sound. (R6)**

9. State the location of the SSF Fire Alarm Control Unit. (R7)

10. State the eight zone locations monitored by the SSF fire detection system. (R8)

11. Briefly describe the design and operation of the SSF fire detection system. (R9)

12. Describe how to determine the location of a fire from the SSF Fire Alarm Control Unit. (R10)

13. Briefly describe the design and operation of the Keowee Hydro Station fire detection system. (R11)

1) Reactor Building (RCP oil flash point is below RCS temperature)
2) Operator Kitchens
3) Laundry
4) MTOT

c). Is Normally Unoccupied
1) Chemical storage
2) Storage areas.

d) Areas specifically required to be monitored by NRC regulations.

E. (Obj R5, R6) Operator Alarm Response

1. Fire Alarm is received in the control room via 1(3) SA-03 / B-6, FIRE ALARM.
   a) No automatic actions associated with the alarm actuation itself.
2. Monitor the alarm cabinet to determine the cause of the alarm.
3. Push the ACKNOWLEDGE switch at the fire alarm cabinet to silence the audible alarm.
4. If more than one alarm or trouble condition exists, use the PREVIOUS/NEXT switch to scroll through ail alarms to determine the affected areas or detectors.
5. If one or more detectors are in alarm, dispatch an operator to survey the immediate area to determine the cause of the alarm.

NOTE: The operator should be aware that since the system uses particle of combustion detectors, there may not be "visible" smoke if a fire exists (in the incipient phase). Therefore, if no cause for the alarm is readily apparent, someone should remain in the area for sufficient time to assure that no fire exists.

6. If a fire does exist, the operator will notify the Control Room and/or perform actions to mitigate the situation that can be safely accomplished.
7. Control Room Operator Action after local status report of a fire / valid alarm:
   a) Notify the Control Room Supervisor.
   b) Refer to RP/0/A/1000/01 (Emergency Classification Procedure).
   c) Refer to the Fire Plan for specific information concerning the fire location.

Question 95 IC040606 IC040606

Unit 1 plant conditions:

- 1SA-3/B6 FIRE ALARM, actuates
- Operator responds to the fire alarm cabinet:
  - ACKNOWLEDGE switch is depressed
  - Alarm remains in the alarm state

Which ONE of the following describes the operators FIRST (next) response? (.25)

A. Dispatch an operator to the location of the alarm.

B. Dispatch the Fire Brigade to the location of the alarm

C. Notify the OSM and STA to report to the control room.

D. Refer to the Fire Plan and RP/1000/29, Fire Brigade Response.

Answer 95
A
A. Correct - the first response of the RO after acknowledging the fire alarm cabinet is to dispatch an operator to the location of the alarm and verify the validity of-the alarm.
B. Incorrect - This is an action but not the first action
C. Incorrect - This is an action but not the first action
D. Incorrect - This is an action but not the first action

1 POINT

Question 23

Unit 1 plant conditions:

INITIAL CONDITIONS:
- Reactor power = 100%

CURRENT CONDITIONS:
- Hazardous material release requires Control Room evacuation

Which ONE of the following is correct?

Borated water from the _____ is added to the RCS to ensure adequate shutdown margin while _____ at the ASDP.

A. SFP / cooling down to 532°F

B. BWST / cooling down to 532°F

C. SFP / maintaining normal post trip conditions

D. BWST / maintaining normal post trip conditions

change to match

Question 23

T1/G2

068AK3.17, Control Room Evacuation:
Knowledge of the reasons for the following responses as they apply to the **Control Room** Evacuation: Injection of boric acid into the RCS (3.7/4.0)

1

Answer: **D**

A. Incorrect, SFP is not used when controlling from the ASDP. This would be correct for controlling from the SSF. Second part is incorrect. A cooldown should not be initiated from the ASDP.

B. Incorrect, first part correct. Second part is incorrect. A cooldown should not be initiated from the ASDP.

C. incorrect, SFP is not used when controlling from the ASDP. This would be correct for controlling from the SSF. Second part is correct.

D. Correct, AP/08 (Control Evacuation) directs that 1HP-24 be opened to borate the RCS from the BWST to ensure adequate SDM. AP/8 directs the operator to maintain normal post trip conditions for the ASDP. A cooldown should not be initiated from the ASDP.

Technical Reference(s): AP/08 (Loss of Control Room)

Proposed references to be provided to applicants during examination: None

Learning Qbjective: EAP-APG, R91

Question Source: NEW

Question History: Last NRC Exam _____

Question Cognitive bevel: Memory or Fundamental Knowledge
Comprehension or Analysis

Could not write a discriminating question based on *this* KA. The sequence of steps in the *Loss of* Control AQ is not significant. Randomly picked another *KA* from applicable AK3 *KAs.* Contacted Gerry Laska on 4/5/04 to discuss the selected KA. *Mr.* Laska was satisfied with *our* randomly selected *KA.*

G. Locate and identify the answers to specific questions on applicable limits, cautions, notes, etc., within the procedures

3.5 In addition, become familiar with the content of each so as to be able to answer questions relating to general systems alignments, available operator controls and instrumentation, and the bases for specific actions.

4. Given a copy of AP/*/A/1700/05, 06, 08, 10, 11, 13, 14, 16, 19, 22, 23, 24, 25, 27, and 2000/02, walkthrough steps, locate equipment, instrumentation and controls outside the Control Room referred to in the AP. Especially address those devices, which require manual operation. (R5)

5. Explain the basis for limits, cautions, notes and major steps in the AP. (R6)

6. Given a set of parameters, determine if immediate Rx trip criteria is met for applicable AP's and QMP guidance. (R7)

7. Discuss major mitigation strategy associated with each AP. (R8)

8. Without the use of reference, when an AP is required to be utilized by the operator be able to demonstrate the following: (R9)

8.1 State the Entry Conditions and Immediate Manual Actions in the AP.

8.2 Explain the basis for limits, cautions, notes and major steps In the AP.

8.3 Based on plant data received, summarize proper operator actions and strategies required in the AP to mitigate the abnormal plant condition.

8.4 Utilizing available operator controls and Instrumentation both inside and outside the control room interpret the indications and take proper actions per the AP that should mitigate the abnormal condition.

8.5 Provide proper directions to operators and supporting groups performing actions of the AP outside the control room.

1 POINT

Question **24**

Unit 3 plant conditions:

- Reactor power = 3%
- Shutdown in progress

Which ONE of the following is required if IA is valved into the RB?

An operator must be stationed in_____ and constant communication with the Control Room _____

A. the immediate vicinity of the outside RB isolation valve / is NOT required.

B. a low **dose** waiting area just outside the East Penetration Room / is NOT required.

C. the immediate vicinity of the outside RB isolation valve / **is** required.

D. a low dose waiting area just outside the East Penetration Room / is required.

Question 24
T1/G2

069AG2.1.2, boss of Containment Integrity
Knowledge of operator responsibilities during all modes of plant operation.
(3.0/4.0)

Answer: C

A. Incorrect, first part correct. Second part incorrect. The operator is required to be stationed near the valve in constant communication with the Control Room.

E. Incorrect, both parts incorrect. The operator is required to be stationed near the valve in constant communication with the Control Room.

C. Correct, IA may be valved in at this time if compensatory actions are taken per TS 3.6.3 and Compressed Air procedure. The operator is required to be stationed near the valve in constant communication with the Control Room.

D. Incorrect, first part incorrect. Second part correct. The operator is required to be stationed near the valve in constant communication with the Control Room.

Technical Reference(s): **OP/0/A/1106/027** [Compressed Air) **Encl.** 4.2 (Valving IA To RB While Containment Integrity Is Required)

Proposed references to be provided to applicants during examination: None

Learning Objective: SSS-IA, R14

Question Source: Bank **# SSS041402**

Question History. Last NRC Exam _____

Question Cognitive Level: Memory or Fundamental Knowledge
Comprehension or **Analysis**

10. For PT/0/B/0170/012 Primary Instrument Air System Air Quality Test, describe: (R49).
    - 10.1 Test purpose
    - 10.2 Test performance

11. Given a copy of PT/0/B/0170/012 PIA System Air Quality Test, and a set of data, determine if acceptance criteria is met. (R50)

12. When given the position of the Unloading Valves and Discharge Feather Valves determine whether a Worthington Backup IA compressor is running loaded or unloaded. (R2)

Z3. Describe the normal and alternate cooling water supplies to the Backup IA Compressors. (R3)

14. Explain the purpose of the Backup IA aftercoolers in the IA System. (R4)

15. Identify the cooling water supply to the Backup IA Compressor aftercoolers. (R5)

16. Explain the purpose of the air receiver tanks in the IA System, and why it is important to periodically blow down the receiver banks. (R6)

17. Explain the purpose of the air dryers in the IA System. (R7)

4 8. Discuss the Backup IA Compressor operation for the following switch positions: (R8)
    - 18.1 BASE
    - 18.2 OFF
    - 18.3 STANDBY-1
    - 18.4 STANDBY-2

19. Locate the three alarms on the Backup IA Compressor Control Panel, and explain, what each means. (R9)

20. Describe the two functions of the reset button on the Backup IA Compressor Control Panel. (R10)

21. Explain the function of the transfer switch on the Backup IA Compressor Control Panel. (R11)

22. **Discuss any precautions that must be exercised when IA is valved into the Reactor Building, if containment integrity is required. (R14)**

23. Explain the purpose for the Auxiliary Instrument Air System.(R37)

24. Explain how the AIA system is protected against leaks, which may occur on the original IA system. (R38)

3. (Obj. R14) Valving in IA to RB (when containment integrity required)

   a) Any time IA is valved into RB (IA-90 & IA-91 opened), when containment operability is required (MODE 1,2,3 & 4), an operator must be stationed at or near IA-90 to close the valve, if ES actuation occurs. Constant communication with the control room is required.

      1) When necessary to open these valves Condition A of T.S. 3.6.3 will be entered prior to the opening of IA-91 when Containment Operability is required. When the inside Containment Isolation valve is open and a person is stationed at the outside Containment Isolation valve in constant communication with the control room the condition is limited to < 4 hours. The condition will be exited after IA-91 has been closed.

   b) When IA needs in RB have ended, both valves must be closed.

   c) When valving in IA to RB, valve in slowly to prevent causing a sudden drop in Aux. Bldg. IA pressure.

2.2 Auxiliary Instrument Air (AIA) System

A. (Obj. R37) The AIA system provides a reliable source of instrument air to selected components during a loss of IA. The components selected are based on maintaining operations, which minimize operator burden and Unit transients while reaching, and maintaining a safe shutdown.

   a) Phis system was designed to maintain a supply of instrument air to components during two basic failure modes involving the IA System: (OC-SSS-IA-8)

      1) bine breaks with demands which exceed the IA System capacity, and

      2) Load shedding of IA System equipment's electrical power supplies.

B. Load Shed (Protection from loss of AC power)

   1. The compressors are powered from non-load shed power supplies:

      a) Unit 1 compressor from 1XP

      b) Unit 2 compressor from 2XP

      c) Unit 3 compressor from 3XP

   2. The air dryers are also powered from non-load shed sources:

      a) Unit 1 from 1KC

      b) Unit 2 from 2KC

      c) Unit 3 from 3KC

Question 43 SSS041402 SSS041402

Unit 3 plant conditions:

- Reactor power = 3%
- Shutdown in progress

Which ONE of the following is correct for the above conditions? (.25)

IA may...

A. not be valved into the RB at this time.

B. not be valved into the RB until MODE 4 is reached.

C. be valved into the RB for up to twelve hours if an operator is stationed near the outside RB isolation valve and in constant communication with the Control Room.

D. be valved into the RB for up to four hours if an operator is stationed near the outside RB isolation valve and in constant communication with the Control Room.

Answer 43
D

A. Incorrect, see D.
B. Incorrect, see D.
C. Incorrect, , IA may be valved in at this time if compensatory actions are taken per TS 3.6.3 and R&R procedure. It can be in this configuration for up to 4 hours not 12..
D. Correct, IA may be valved in at this time if compensatory actions are taken per TS 3.6.3 and R&R procedure. It can be In this configuration for up to 4 hours.

1 POINT

Question 25

Unit 1 plant conditions:

- Reactor power = 100%
- EFPD = 138

Which ONE of the following can the operator use as an indication *of failed* fuel?

A. Increase in RCS DEI

B. Increase in RCS Tritium

C. Decrease in Xenon 133/135 ratio

D. *Decrease* in Iodine 1311133 ratio

NOT conclusive

Question 25

T1/G2

076AA1.04, High Reactor Coolant Activity:
Ability to operate andlor monitor the following as they apply to the High Reactor Coolant Activity: Failed fuel-monitoring equipment (3.2/3.4)

Answer: A

A. Correct, Iodine 131/133 ratio will increase with clad failure and total Iodine activity will increase. This will result in an increase in DEI.

B. Incorrect, The majority of Tritium in the RCS results from B-10 and Li-7 reactions. These reactions are external to **the** fuel.

C. Incorrect, Xenon 1331135 ratio will increase with clad failure. . Xe^{133} and Xe^{135} show a spiking characteristic similar to Iodine during RCS transients. This relationship will provide indication of fuel condition prior to Iodine presence in the RCS.

D. Incorrect, Iodine 131/133 ratio is not used to determine failed fuel

---

Technical Reference(s):

Proposed references to be provided to applicants during examination: **None**

Learning Objective: **CH-RC, R6, 7, and 10**

Question Source: **NEW**

Question History: Last NRC Exam _____

Question Cognitive bevel: **Memory or Fundamental Knowledge**
Comprehension or Analysis

TRAINING OBJECTIVES

TERMINAL OBJECTWE

The student will be able to describe the various sources of and radiations emitted by radionuclide at Oconee Nuclear Site, and to recognize the various radiochemical analyses used to detect their presence and quantity.

ENABLING OBJECTIVES

1. State the three (3) principle radionuclide formed by activation of makeup water components and describe how they are formed. (R2)

2. Describe the production, decay, and concerns of Nitrogen-16. (R1)

3. State the two (2) primary sources of and four (4) concerns associated with Tritium. (R3)

4. State the two (2) radionuciide which present the principal concern to RB entry during shutdown and describe the s o m e of each. (R4)

5. State five (5) principle radionuclide produced by the fission process and explain why each is a concern. (615)

6. **Explain why iodine ratio can be used to verify the presence of fuel cladding leaks. (R6)**

7. **Define Dose Equivalent Iodine (DEI) and state when it can become a concern. (R7)**

8. State where procedural guidance can be found concerning DEI. (R8)

9. Define E-bar, and explain why it is determined. (R9)

10. **Concerning AP/1700/21, High Activity in the RCS: (R10)**

    10.1 State the Entry Conditions and immediate Manual Actions in the AP.

    10.2 Explain the **basis** for limits, cautions, notes and major steps in the AP.

    15.3 Based on plant data received, summarize proper operator actions and strategies required in the AP to mitigate the abnormal plant condition.

    10.4 Utilizing available operator controls and instrumentation both inside and outside the control room interpret the indications and take proper actions per the AP that should mitigate the abnormal condition.

    10.5 Provide proper directions to operators and supporting groups performing actions of the AP outside the control room.

4) Iodine is hazardous because it is selectively absorbed by and concentrated in the thyroid.

5) Analyses of the iodine concentrations in the RCS can also be used to determine or verify fuel clad failure.

(a) Radioiodine enter the RCS from either the fission of tramp uranium, from clad defects, or by diffusion through the cladding.(recoil)

(b) I^{131} and I^{133} are the two longest-lived iodine isotopes (respectively, 8 days and 21 hours) and will rapidly build to equilibrium values if there are no clad failures.

(c) Clad failures cause the activity level to be considerably higher than the equilibrium value.

(d) I^{133} has a shorter half-life (21 hours) than ^{131} (8 days). The I^{131}/I^{133} ratio for no defects is about 0.06. The higher the ratio, the laager the defect.

INSTRUCTOR NOTE: No Defect. It's simply the ratio of the fission yields of the two Iodine isotopes the recoil into the RCS (≈0.06). Realistically, tight fuel at Oconee has an equilibrium ratio value of ≈ 0.1

(e) The Iodine ratio is but one indicator of fuel clad failure.

(1) Clad defects will be indicated not only by a higher 131/133 ratio, but also by an increase in total iodine activity, and by iodine activity "spikes" during RCS upsets. If the iodine concentration doesn't return to its 'pre-spike' level, additional clad defects can be assumed to exist. Spiking occurs due to power changes andlor RCS pressure drops.

e) Cesium

1) Cs^{137} and Cs^{134} are the isotopes of interest since the other isotopes are short-lived.

2) Cs^{137} is the major isotope of concern bemuse of its high production yield and long half-life (30 years).

3) Cs^{137} is a major component of the station's contamination and a major environmental concern. It reaches the general population through vegetables, meat, and milk.

4) Since Cs^{134} has a shorter half-life (2.06 years) than Cs^{137}, they are used in a ratio (like I^{131}/I^{133}) to determine fuel leaks.

(a) This ratio is used to identify which batch of fuel contains a *leaking rod* when performed *immediately* following a

E. Tritium Analysis

1. The RCS is sampled for tritium on a monthly basis when the reactor is above cold shutdown.
2. A monthly sample for tritium in the liquid wastes (LHST, #3 CTP, etc.) is required by SLCs.
3. GWD Tanks and RB purges are measured for tritium levels prior to each release pes SLCs.

F. $\bar{E}$ Determination

1. E-bar is the average beta and gamma energies, in MeV, per disintegration, weighted in proportion to the contribution to the total activity of the sample from each radionuclide with a half-life longer than 30 minutes.
2. E-bar determination is made with a quantitative measurement of 95% of the radionuclides in the RCS with half-lives greater than 30 minutes.
   a) The following analyses are used in E-bar determination:
      1) Gross gamma liquid pressurized
      2) Tritium
      3) Gas Gamma Isotopic
3. (OBJ R9) E-bar is used to set the limit on total allowable activity of the RC System (<100/$\bar{E}$) when the reactor is critical.
   a) The total activity limit is based on limiting the dose at the site boundary for a steam generator tube rupture to < 25 Rem whole body (TEDE) per 10CFR100 limits.
4. E-bar determination is required periodically by Tech. Specs 3.4.11.

2.3 (OBJ R10) Concerning AP/1700/21, High Activity in the RCS:

A. State the Entry Conditions and immediate Manual Actions in the AP.

1. Entry Conditions:

a) ≥ 0.25 mCi/gm or ≥ 0.25 mCi/ml DEI activity In the RCS.

2. IMA:
   a) None
3. Automatic Actions:
   a) None

B. Explain the basis for limits, cautions, notes and major steps in the AP.

I. Subsequent Actions - NOTE: The unit of measure µCi/ml may be used interchangeably with µCi/gm when comparing chemistry sample results with Tech Spec limits and conditions of this procedure.

b) Only about 1% of the tritium produced from ternary fission diffuses through an intact Zr-4 clad.

c) Most of the tritium from ternary fission is retained in the cladding by chemical hydriding with Zirconium.

4. Xe, Kr, I, and Cs are of importance for normal RCS radiochemical analyses because they comprise the majority of the total RCS activity. All of these radionuclide's concentrations trend up when a fuel clad leak occurs.

a) Xe^{133}

1) Phis is one of the most abundant fission products.

2) Significant concentrations exist in the RB during operation because of small leaks in the RCS.

3) Xe^{133} diffuses easily through the clad or small clad defects.

4) Xe^{133} is a whole body external radiation hazard since it is inert.

5) RIA-32 and RIA-39 are calibrated for Xe^{133} because of its abundance and high activity. It would be one of the earliest indication of an RCS leak into the auxiliary building.

6) Like most fission gases, Xe^{133} is a beta-emitter.

b) Xe^{135}

1) The most important consideration of Xe^{135} is its core reactivity effect.

2) Xe^{133} and Xe^{135} show a spiking characteristic similar to Iodine during RCS transients. This relationship will provide indication of fuel condition prior to Iodine presence in the RCS.

c) Kr^{85}

1) This is the major Krypton isotope, and one of the major fission products.

2) This inert gas is a major constituent of waste gas releases from the station since it cannot be removed from the release and has a 10.3 year half life.

d) (OBJ R6 and 7) Iodine

1) The radioiodine have a high production probability and may occur as gases or as particulate (halogen).

2) Most iodine's that escape from the RCS are removed from gaseous waste by particulate and charcoal filters.

3) I^{131} is the most environmentally important isotope because its 8-day half-life is the longest of the Iodine isotopes normally detected.

1 POINT

Question 26

Unit 1 plant conditions:

- SBLOCA in progress
- All SCMs = 0°F
- Reactor power = 0%
- BOP is performing Rule 2 (LOSCM):
  - Both MD EFDWPs operating
  - 1FDW-315 (1A SG EFDW Control) has failed closed and will not open in auto or manual

Which ONE of the following actions should the BOP perform **next?**

A. Continue in Rule 2 (LOSCM) until directed to ensure Rule 3 (boss of Main or Emergency FDW) in progress.

B. Exit Rule 2 (LOSCM) and initiate Enclosure 5.27 (Alternate Methods for Controlling EFDW Flow).

C. Request permission to allow the TDEFDWP to continue operation per OMP 2-18 guidance.

D. Request permission to allow the Main FDW pumps to continue operation per OMP 1-18 guidance.

Question 26

T1/G2

BE13EK1.2, EOP Rules
Knowledge of the operational implications of the following concepts as they apply to the (EOP Rules): Normal, abnormal and emergency operating procedures associated with (EOP Rules). (3.0/3.6)

Answer: A

A. Correct: Rule 2 should be continued. Step 37 will ensure Rule 3 in progress or complete. Rule 3 will initiate Enclosure 5.27 for establishing an alternate EFDW flow path due to FDW-315 failure.

B. Incorrect: Immediately initiating Enclosure 5.27 is on procedure based. Rule 2 must be continued until appropriate direction is provided.

C. Incorrect: TDFEFDW operation is not required and will not resolve failure. Rule 2 should be continued. Would be correct if a MDEFDW pump had failed to start.

D. Incorrect: Main FDW pumps should be tripped as directed. Continued operation is not required. An EFBW flow path will be established by Enclosure 5.27.

Technical Reference(s): EOP Rule 2

Proposed references to be provided to applicants during examination: None

Learning Objective: EAP-LOSCM, R12

Question Source: Bank # EAP130422

Question History: Last NRC Exam _____

Question Cognitive Level: Memory or Fundamental Knowledge
Comprehension or Analysis

Objs. R: 42, 43, 44, 45 Covered in Rule 3 Training-

2. Explain how a single MBEFDWP is aligned to both SGs. **(R42)**

3. Explain why operation of the condensate system is preferred during extended EFDW operation. **(R43)**

4. Describe actions taken per enclosure 5.9, Extended EFDW Operation to maintain UST inventory. **(R44)**

5. Explain the actions required to establish suction source to the EFDW pumps from the Hotwell. **(R45)**

Objs. To Be Covered in LOSCM Tab and Encl. 5.12 Training

6. Recognize that, provided HPI/LPI is operating, subcooling margin should be restored within ~10 minutes unless a large break LOCA has occurred. **(R11)**

7. **Given a set of plant conditions determine** the **correct actions to take using LOSCM (Loss of Subcooling Margin) section of the EOP. (R12)**

8. Explain why HPI piggyback operation may be required during SBLOCAs. **(R16)**

9. State when the LOSCM section should be entered. **(R1)**

10. Explain the reason for determining if the cause of LOSCM is due to over-cooling. **(R5)**

11. State the symptom in the EOP that is used to determine that SG heat removal will not be required during a LOCA. **(R10)**

12. Given a copy of Figure 1, Total Required HPI Flow, be able to determine, for a given set of conditions, whether a Rapid RCS Cooldown is required. **(R17)**

13. Describe the two (2) actions taken to cool and depressurize the RCS if total HPI flow is not adequate or if it cannot be established to each header. **(R18)**

44. Discuss the reasons for not attempting to depressurize the RCS to LPI conditions by opening the PORV when SCM is lost and HPI is not available. **(R19)**

15. Describe the basis for swapping LPI and RBS suction to the RBES when the BWST level decreases to 19 feet. **(R20)**

16. Given a set of system failure conditions, assess the situation and determine the correct contingency actions. **(R34)**

17. Describe the differences in actions taken to swap suction to the RBES between a SBLOCA and a LBLOCA. **(R21)**

18. Explain the actions taken to control HPIP recirc flow. **(R29)**

Question 226 EAP130422 EAP130422

Unit conditions:

- SBLOCA in progress
- All SCMs = 0°F
- Reactor power = 0%
- Rule 2 (LOSCM) in progress
- All EFDW pumps are in service
- The operator performing Rule 2 is at step 19
- The operator determined IFDW-315 (1A SG EFDW Control) has failed closed and would not open in auto or manual

Which ONE of the following actions should the operator perform next? (.0.25)

A. Continue in Rule 2.

B. Immediately initiate Enclosure 5.27 (Alternate Methods for Controlling EFDW Flow).

C. Request a procedure deviation to allow the TDEFDWP to continue operation.

D. Request a procedure deviation for allowing the Main FDW pumps to continue operation until 1FDW-315 failure is resolved.

Answer 226
A
A. Correct: Rule 2 should be continued. Step 24 will ensure Rule 3 in progress or complete. Rule 3 will initiate Enclosure 5.27 for establishing an alternate EFBW flow path due to 1FDW-315 failure.
B. Incorrect: Immediately initiating Enclosure 5.27 is on procedure based. Rule 2 must be continued until appropriate direction is provided.
C. Incorrect: TDFEFDW operation is not required and will not resolve failure. Rule 2 should be continued.
D. Incorrect: Main FDW pumps should be tripped as directed. Continued operation is not required. An EFDW flow path will be established by Enclosure 5.27.

1 POINT

Question 27

Unit 2 plant conditions:

INITIAL CONDITIONS:
- Reactor power = 100%
- Both Main FDW pumps trip

CURRENT CONDITIONS:
- 2FDW-316 (1B SG EFDW Control) failed closed

Which ONE of the following is the correct operator action?

Use…

A. Rule **4** (Initiation of HPI Forced Cooling) to initiate HPI forced cooling.

B. Rule 3 (Loss of Main or Emergency FDW) to feed the SGs with Condensate Booster Pumps.

C. EOP Enclosure 5.27 (Alternate Methods for Controlling EFDW Flow) to control EFBW flow through the 2FDW-44 (2B Startup FDW Control).

D. EOP Enclosure 5.27 (Alternate Methods for Controlling EFDW Flow) to control EFDW flow through 2FDW-316 (25 EFDW Control). Look at

Look at the Confusion

Question 27
T1/G2

BE14EK2.1, EOP Enclosures
Knowledge of the interrelations between the (EOP enclosures) and the Following: Components, and functions of control and safety systems, including instrumentation, signals, interlocks, failure modes, and automatic and manual features. (3.6/3.4)

Answer: C

A. Incorrect, primary to secondary heat removal still exists. **Could** be true if FDW flow was lost to both SGs.

5. Incorrect, CBP feed is not necessary because EFDW flow to one SG **still** exists.

C. Correct, with **2FDW-316** failed closed, EOP Enclosure 5.27 (Alternate Methods for Controlling EFDW Flow) will be used to establish and control EFDW flow through the 2A S/U Control Valve.

D. Incorrect, with 2FDW-316 failed closed, EOP Enclosure 5.27 (Alternate Methods for Controlling EFDW Flow) will be used to establish and control EFBW flow through the 2A S/U Control Valve. Could be true **if** 2FDW-316 **was** failed open.

Technical Reference(s): EOP Enclosure 5.27 (Alternate Methods For Controlling EFDW Flow)

Proposed references to be provided to applicants during examination: None

Learning Objective: EAP-LOHT, **R30**

Question Source: **NEW**

Question History: Last NRC Exam _____

Question Cognitive bevel: Memory or Fundamental Knowledge
Comprehension or Analysis

OBJECTIVES

TERMINAL OBJECTIVE

1. Describe the use of Loss of Heat Transfer tab of the Emergency Operating Procedure in order to perform the required actions of a Control Room operating crew in an event involving a Boss of heat transfer. (T1)

ENABLING OBJECTIVES

1. Describe the conditions that would require entry into LHT. (R23)
2. Discuss the overall mitigation strategy of LHT. (R24)
3. Explain the basis for cautions, notes and major steps in LHT. (R25)
4. Given plant conditions, determine appropriate actions based on Rule 3 (Loss of Main or EFDW). (R26)
5. Given plant conditions, determine appropriate actions based on Enclosure 5.27 (Alternate Methods For Controlling EFDW Flow). (R30)
6. Given plant conditions, determine appropriate actions based on Enclosure 5.26 (Manual Start of the TDEFDWPT). (R29)
7. Describe, in general, the correct method for establishing SG feed supplied by the CBPs in order to maintain system temperatures until EFDW can be restored. (R6)
   7.1 Recognize that "CBPs available" implies that CBPs should be started (if not already running) if system conditions allow.
8. Explain why an excessive RCS cooldown would result when feeding SGs with the CBPs if a level were established. (R7)
9. State when and how HPI forced cooling should be initiated following a loss of all sources of feedwater. (R1)
10. Given plant conditions, determine appropriate actions based on Rule 4 (Initiation of HPI Forced Cooling). (R28)
11. Recognize that limiting the number of running RCPs to one per loop can reduce heat input to the RCS. (R2)
12. Describe the basis for securing all but one RCP when in the HPI forced cooling mode. (R10)
13. Explain why the RCS high point vents rnust be opened if HPI cooling is not effective. (R19)

1 POINT

Question 28

Which ONE of the following is correct?

1A Component Cooling Pump **is** powered from _____

A. 1XN

B. 1XS1

C. 1XGA

D. 1KVIA

Take to Generic about 1XL

replace C & D

Question 28
T2/G1
003K2.02, **Reactor Coolant Pump System**
Knowledge of bus power supplies to the following: CCW pumps (2.5*/2.6*)

Answer: A

A. Correct, 1XN supplies the 1A Component Cooling Bump.

B. Incorrect, 1XS1 does not supply the 1A Component Cooling Pump

C. Incorrect, 1XGA does not supply the 1A Component Cooling Pump.

D. Incorrect, 1KVIA does not supply the 1A Component Cooling Pump.

Technical Reference(s):

Proposed references to be provided to applicants during examination: **None**

Learning Objective: **None**

Question Source: **NEW**

Question History: Last NRC Exam _____

Question Cognitive Lever: **Memory or Fundamental Knowledge**
Comprehension or Analysis

b) Tube Side

Design Pressure	150 psig
Design Temperature	300° F
Inlet Temperature	75" F
Outlet Temperature	106" F
Tube/Tube Sheet Material	Alloy

B. Component Cooling Pumps

1. Purpose

The purpose of the component cooling pumps is to deliver the necessary flow to the letdown coolers, reactor coolant pump seal coolers, quench tank cooler, and control rod drive cooling coils.

2. Description

a) Two 100% capacity CC pumps, located in parallel, are provided for each unit. Only one pump per unit normally operates with the other pump acting as a spare.

b) The CC pumps are vertical, single stage, centrifugal pumps that are powered by 60 hp, 600 VAC electric motors. Pump vents and drains are routed to the component cooling drain tank.

c) The suction of the CC pumps is connected to the discharge of the CC coolers and the discharge of the CC pumps is connected to the reactor building supply header.

d) Local indication of individual CC pump discharge pressure is provided.

e) The CC pumps are powered from XL and XN motor control centers.

3. Specifications:

Design Pressure	125 psig
Design Temperature	350° F
Design Flow	766 gpm
Material	Carbon Steel (casing)
	Cast Iron (impeller)

C. Component Cooling Surge Tank

1. Purpose

The purpose of the component cooling surge tank is to provide for thermal expansion and contraction of the CC water in the closed loop system, to ensure adequate CC pump NPSH, and to provide a location for DW makeup and chemical addition to the system.

1 POINT

Question 29

Unit **1** plant conditions:

- Reactor power = 100%
- 1HP-5 failed CLOSED

Which ONE of the following is correct?

1HP-5 should be manually opened to establish normal letdown flow of _____ gpm and the reactor should be manually tripped if pressurizer level reaches _____ inches.

A. 20 / 260

B. 20 / 375

C. 70 / 260

D. 70 / 375

Question 29

T2/G1

004A1.08, Chemical and Volume Control System

Ability to predict andlor monitor changes in parameters (to prevent exceeding design limits) associated with operating the CVCS controls including: Normal operating band for letdown flow rate (2.7/2.9)

Answer: D

A. Incorrect, first part incorrect. Would be correct for the letdown flow initially established with 1HP-7. Second part would be correct if asked at what level a rapid unit shutdown would be required.

B. Incorrect, first part incorrect. Would be correct for the letdown flow initially established with 1HP-7. Second part is correct.

C. Incorrect, first part correct. Second part would be correct if asked at what level a rapid unit shutdown would be required.

D. Correct, normal letdown flow Is 70 gpm. A reactor trip is required IAAT PZR level reaches *395".*

Technical Reference(s):

Proposed references to be provided to applicants during examination: **None**

Learning Objective: **PNS-HPI, R7; ADM-OMP, R1**

Question Source: **NEW**

Question History: Last NRC Exam _____

Question Cognitive Level: **Memory or Fundamental Knowledge**
Comprehension or Analysis

5. Explain the purpose for each HPI system interlock and when given plant conditions: (R5, R8, R11, W12, R39, R16, R20, R22)

   5.1 Predict system/component indication &/or response to HPI system interiock actuation.

   5.2 Describe necessary actions and/or plant status required to return system/component indication to normal operating status.

6. Determine when HP-42 must be opened. (R6)

9. State what action may have to be taken when increasing letdown flow significantly > 70 gpm. (R7)

8. Describe manual operation of HP-5 and requirement to ensure proper response following manual operation. (R9)

9. Predict plant response (control rod, etc.) to placing a demineralizer in service which has not been boron saturated and explain the concern. (R10)

10. State the purpose of maintaining hydrogen overpressure on the LDST and the consequences of not maintaining the proper hydrogen overpressure on the LDST. (R13)

11. List the four possible sources of highly borated water that can be used for normal makeup. (R14)

12. List the two possible sources of Bow borated water that can be used for normal makeup. (R15)

13. Briefly explain why the Seal Return Coolers are designed for 250 gpm flow rate while actual seal return flow is much lower. (R17)

14. Summarize the effects of not maintaining 2.7 gpm warming line flow on the "A" loop injection nozzles. (818)

15. Explain why the use of the "B" HPI injection nozzles with RCS temp. > 250°F must be documented in the Unit log. (R19)

16. Summarize the effects of restarting an HPIP following a total loss of HPI flow, prior to closing HP-31. (R21)

17. State two purposes for aligning pressurizer auxiliary spray during a normal shutdown. (R24)

18. Explain the thermal stress concern that can be involved with the use of pressurizer auxiliary spray. (R25)

19. Explain how to regain operator control of the HPI pumps after resetting ES channels 1 and 2. (R27)

3. Letdown Flow Control

a) Letdown flow control is achieved by use of a block orifice which reduces letdown pressure from 2155 psig to 100 psig and a bypass around the block orifice.

b) The block orifice will allow 40 gprn flow when HP-5 and HP-6 are opened. To increase letdown flow HP-7 can be throttled open as necessary.

- Procedural guidance for increasing letdown flow is directed in the HPI Startup enclosure. The guidance is very general: "If required...adjust HP-7 as needed to maintain letdown flow as RCS pressure increases". Operators should ensure proper CC conditions before increasing letdown Row. Before increasing letdown flow the operators can refer to the OAC CC display which gives them the cooler inlet and outlet temperatures. The operators can and should also monitor letdown temperature.
- The relief valves on the letdown line and the demineralizers lift around 145-150 psig. Operators must be careful not to lift these reliefs during periods when makeup and letdown are being changed or during evolutions such as placing demineralizers &/or letdown filters in or out of service.
- The computer alarm setpoint for High Pressure in the Letdown Bine on all 3 units alarms at 130 psi. This gives the operator time to respond to the alarm and take action to prevent lifting the letdown line relief valves.

c) (Obj R6) During Bow pressure conditions, such as unit S/U or S/D, it may be necessary to use the manual bypass (HP-42) located in the seal supply filter room, if HP-7 is unable to pass the required flow. Key is required for lock. Do not exceed 120 psig at local gauge.

d) (Obj R7) Normal letdown flow is approximately 70 gpm. If increased significantly above this value, an additional CC pump may be placed in service. Procedures direct to run both CC pumps during heat-up. When Unit is at normal operating temperature and pressure the heat removal capabilities are checked and the second CC Pump stopped.

1) When removing a UD cooler from service or placing a L/D cooler in service, enclosure Operation Of Letdown Coolers should be followed. (Refer to Component Boron Log 02-2537)

2) Events have resulted in flashing of the CC system, a result of inadequate flow balancing of CC, at a letdown flow of 88 gpm. A separate endosure of the Component Cooling procedure now provides direction for Letdown Cooler flow balance setup.

3) Letdown flow should be limited to 120 gprn with 1 letdown cooler in service

2. Be able to recite, from memory, any required procedure or administrative items as detailed in OMP 1-18, Licensed Operator Memory items Attachment: (R1)

   2.1 The student is not required to be able to list each item in the attachment from memory.

   2.2 The student Is expected to be able to recall from memory those actions or statements listed in the attachment as they relate to the specific task or evolution being performed.

3. When given a copy of the Operations Manual, or portions thereof, be able to demonstrate an understanding of the guidance or rules within specific OMP's by locating the answer to or interpreting required responses for a given situation. (R2)

4. The operator will become well versed in the requirements set forth in the following OMP's, in order to meet the expectations of Operations Management and conduct safe reliable operations of all Oconee units at all times. The operator will comprehend and exercise the OMP as it relates to the following conditions:

   4.1 OMP 1-2, Rules of Practice (R3)

   A. Acceptable means of operator conduct and operational practices.

   B. Limits for acceptable work schedules.

   C. Minimum shift staffing requirements.

   4.2 OMP 1-9, Use of Procedures (R4)

   A. Provide guidance to the operator in the following areas concerning procedures:

   - establish consistent methods for using procedures
   - control of approved procedures
   - use of approved procedures
   - completion of procedures
   - control of procedure changes
   - deviation from approved procedures

   4.3 OMP 1-12, NRC License Maintenance (R27)

   A. Requirements for maintaining an active NRC license.

   B. Methods for restoring an inactive license to active staters.

1 POINT

Question *30*

Unit 1 plant conditions:

- LOCA in progress
- RCS pressure = 1310 psig and slowly decreasing
- BOP is performing Encl. **5.1,** ES Actuation

Which ONE **of** the following is correct?

Securing the LPI pumps is _____ and the _____

A. desired / SRO must give permission prior to securing LPI pumps

B. desired / OATC and BOP must concur prior to securing the LPI pumps

C. NOT desired / SRO must give permission prior to securing LPI pumps

D. NOT desired / OATC and BOP must concur prior to securing the LPI pumps

Question 30

T2/G1

005A4.01, Residual Heat Removal System (RHRS)

Ability to manually operate andlor monitor in the control room: Controls and Indication *for* RHR pumps (3.6*/3.4)

Answer: A

A. Correct: LPI pumps should be secured because RCS pressure *is* above LPI pump discharge head. SRQ permission is required prior to securing LPI Pumps.

5. Incorrect: first part correct. Second part incorrect. SRO permission is required prior to securing LPI Pumps.

C. Incorrect: first part incorrect. LPI pumps should be secured because **RCS** pressure is above LPI pump discharge head. Second part correct.

D. Incorrect: first part incorrect. LPI pumps should be *secured* because RCS pressure is above LPI pump discharge head. Second part incorrect. SRO permission is required prior to securing LPI Pumps.

Technical Reference(s):

Proposed references to be provided to applicants during examination: **None**

Learning Objective: **EAP-ESA, 812**

Question Source: **Bank # EAP181201**

Question History: Last NRC Exam _____

Question Cognitive Level: **Memory or Fundamental Knowledge**
Comprehension or Analysis

OBJECTIVES

TERMINAL OBJECTIVE

Describe the use of Encl.5.1 (ES Actuation) of the Emergency Operating Procedure in order to perform the required actions for an Engineered Safeguards System actuation.

ENABLING OBJECTIVES

1. Distinguish between a MSLB, SBLOCA, or LBLOCA as the cause of the ES actuation.(R14)
2. State when Encl.5.1 of the EOP should be performed, and by whom it should be performed. (R1)
3. Recognize that if Encl.5.1 has been performed and AC power is lost and then regained, Encl.5.1 should be performed again. (R8)
4. State the bases for the "Sequencing" of the major steps in Encl.5.1. (R13)
5. Explain how proper ES actuation is verified following automatic initiation of an ES channel. (R2)
6. Describe the required action(s) if it is discovered that an ES channel failed to properly actuate when the actuation setpoint was reached. (R9)
7. Identify when RCP support systems are re-established following ES actuation. (R5)
8. Compare the difference in operator actions if ES channels 1 & 2 have actuated and the following conditions exist: (R10)
   - Both (HP-24 & 25 HPI BWST Suction) fail to open.
   - Only one of (HP-24 & HP-25 HPI BWST Suction) fails to open.
9. Recognize that HPI flow (including RCP seal injection) must be added to the indicated LPI flow when aligned in piggyback to determine actual LPI flow. (R11)
10. Demonstrate the proper use of the "Required HPI Flow per Header" curve. (R3)
11. Explain how Encl.5.1 provides LPI pump suction line overpressure protection in the event that one of the LPI pumps fails during ES actuation. (R16)
12. **Recognize that SRO discretion is applied prior to securing LPI pumps following ES actuation, and that the crew should be notified of this action. (R12)**

Question 270 EAP181201 EAP181201

Unit 1 plant conditions:

- LOCA in progress
- RCS pressure = 1310 psig and slowly decreasing
- BOP is performing Enci. 5.1, ES Actuation

Which ONE of the following is correct? (.25)

A) SRO gives permission to secure the LPI Pumps

B) BOP secures the LPI pumps and notifies the SRO

C) OATC and BOP concur, then the BOP secures the LPI pumps

D) BOP secures LPI pumps, notifies the OATC, and continues the enclosure

Answer 270
A

A) Correct: SRO discretion needed to secure LPI Ps at shutoff head
B) Incorrect: BOP must get permission from SRO prior to securing LPIPs
C) Incorrect: BOP get permission first, then notifies the crew that LPIPs are secured
D) Incorrect: IAAT step says that at the SRO's discretion LPIPs may be secured to provide shutoff head protection

1 POINT

Question 31

Unit 1 plant conditions:

- SBLOCA in progress
- BWST level = 18.5 feet and slowly decreasing
- LPI/HPI Piggyback alignment in progress in preparation for taking suction from the RBES
- 1LP-15 ("1A" LPI to HPI) **cannot** be opened from the control room

Which ONE of the following statements is correct concerning HPI operation?

A. 1A HPI train CANNOT be operated in piggyback until 1LP-15 can be opened.

B. 1A HPI train CAN be operated in piggyback as long as RBS flew in the 1A header is throttled back.

C. Both trains of HPI CANNOT be operated in piggyback, unless two LPIPs are operating to provide adequate suction flow.

D. Both trains of HPI CAN be operated in piggyback, provided total HPI flow is limited when suction is swapped to the RBES.

Question 31
T2/G1

006K6.01, Emergency Core Cooling System (ECCS)
Knowledge *of* the effect *of* a loss or malfunction *of* the following will have *on* the ECCS: BIT/borated water sources (3.4/3.9)

Answer: D

A. Incorrect; both trains of HPI may be used if flow is limited (<750 gprn total)

B. Incorrect: throttling back on BS **flow** is not a requirement for flow in the 1A HPI header

C. Incorrect: only one LPIP is required to provide adequate suction to the HPI pumps.

D. Correct: both HPI headers can be operated *in* piggyback as *long* as total HPI flow is limited to <750 gpm total (NPSH to the HPIPs)

Technical *Reference(s)*:

Proposed references to be provided lo applicants during examination: **None**

Learning Objective: **EAP-LQSCM, R40**

Question Source: **Bank # EAP064002**

Question History: Last NRC Exam _____

Question Cognitive Level: Memory or Fundamental Knowledge
comprehension or Analysis

18.1 Explain the new restrictions that are placed on HPIP flow as a result of these actions.

19. Discuss the actions taken to prevent overpressurizing the LDST. **(R25)**

20. Compare different LPI flow conditions and determine which ones meet the LPIP minimum flow requirements. **(R26)**

21. **Evaluate** different **LPI to HPI piggyback alignments and** determine **which ones require total HPI Row to be limited to <750 gpm. (R40)**

22. Explain the requirement for a total LPI flow of <3000 gpm when in LPI/HPI piggyback. **(R39)**

23. Explain the reason for closing HP-23, 24, and 25 when swapping to RBES during a **SBLOCA. (R41)**

24. Discuss the alignment of **LPSW** to the LPI coolers including the three possible conditions the enclosure covers. **(R28)**

2%. Explain why it is desirable to operate valves, which can't be operated remotely, early in the swap from the BWST to the RBES. **(R22)**

26. Explain why LP-19 and LP-20 are opened simultaneously. **(R33)**

27. Explain why enclosure 5.12, **ECCS** Suction Swap to RBES verifies BWST level continuing to decrease. **(R35)**

27.1 Which level should be used to make this determination?

28. Explain why the BWST outlet valves (LP-21 & LP-22) are not closed until BWST level reaches 6 ft. **(R36)**

29. Predict the results of having LP-19 and LP-21, or LP-20 and LP-22 open at the same time **for the** following conditions: **(R23)**

29.2 High (>10 psig) Reactor Building pressure conditions

29.2 Low (<10 psig) Reactor Building pressure conditions

30. Discuss the seasons for closing LP-28. **(R37)**

31. Given different LPI system alignments predict whether the LPIP suctions will be overpressurized for each alignment. **(R24)**

32. Explain why BS-1 and BS-2 are opened prior to aligning C LPI Pump to an LPI header. **(R27)**

2.8 Step 8: __ Verify total HPI flow including **seal** injection is >500 gpm.

RNO: __ IF both of the following exist:

__ NO flow on the LPI FLOW TRAIN A

__ NO flow on the LPI FLOW TRAIN B

THEN perform the following:

A. __ Secure one LPI pump due to low flow conditions.

B. __ GO TO Step **11.**

A. Per the CAUTION, if HPI flow with 2 LPIPs is >500 gpm **total,** then there is no possibility of minimum flow damage to the LPIPs.

B. RNO: However, if both trains of LPI show no flow (RCS pressure foe high for LPI) AND total HPI flow IS <500 gpm, then LPIP minimum flow damage is **possible.** Secure one of the LPIPs and follow routing steps for 1LPIP.

2.9 Step 9: Simultaneously open the following:

__ 1LP-15

__ 1LP-16

RNO: __ Limit total HPI flow to < 750 gpm including Seal injection.

A. Phis is the normal consistent methodology for LPI/HPI piggyback.

B. (OBJ. **R40) RNO: If only one LPI/HPI flowpath available (LP-15 or 16 did not open), total HPI flow must be limited to <750 gpm** to ensure adequate **NPSH** for the **HPIPs when the RBES Is the suction** source.

See Role 6 – HPI, HPIP Throttling Limits

2.10 Step 10: __ **GO TO** Step 14.

A. Routing step if 2 LPIPs are operating

NOTE

Total LPI flow = LPI header flow + HPI header flows + seal injection

2.11 Step 11: __ Maximize total LPI flow < 3000 gpm **by** throttling HPI flow.

A. See Step 73 - A

2.12 Step **12:** __ Limit total HPI flow to < 750 gpm including seal injection.

A. See Step 13 – A

1 POINT

Question 32

Unit 1 plant conditions:

INITIAL. CQNDITIONS:
- Reactor power = 100%

CURRENT CONDITIONS:
- 1RC-66 (PORV) failed open
- Quench Tank (QT) temperature increasing

What is the maximum temperature (°F) that the QT will reach?

ASSUME NO OPERATOR ACTIONS

A. ≈180

B. ~287

C. ≈ 296

D. ≈ 303

313 COR @ [illegible]

Question 32
T2/G1

087A1.03, Pressurizer Relief Tank/Quench Tank System (PRTS)
Ability to predict andlor monitor changes in parameters (to prevent exceeding design limits) associated with operating the PRTS controls including: Monitoring quench tank temperature (2.6/2.7)

Answer: D

A. Incorrect, this is the procedural maximum QT temperature per OP/1104/017 (QT Operation) Limits and Precautions.

B. Incorrect, this is the temperature that will result if 55 psig not converted to psia.

C. Incorrect, this is the equivalent temperature for the procedural maximum QT pressure of 49 psig (converted to **64** psia) per OP/1104/017 (QT Operation) Limits and Precautions.

D. Correct, QT rupture disk is set to rupture at 55 psig. This corresponds to ≈ 70 psia. The saturation temperature for 70 psia is ≈ 303°F.

Technical Reference(s): **OP/1104/017 (QT Operation)**

Proposed references to be provided to applicants during examination: **None**

Learning Objective: **PNS-CS, R7**

Question Source: **NEW**

Question History: bast NRC Exam _____

Question Cognitive Level: Memory or Fundamental Knowledge
Comprehension or Analysis

10. Describe the basic operation of the Quench Tank (QT) and QT Cooler including: (R7)

    10.1 Purpose during normal and abnormal operating conditions

    10.2 Limits on QT pressure and level, the reasons for these limits, and how QT pressure and level are regulated

    10.3 The primary purpose for the QT Cooler and haw it is placed in operation

    10.4 The general list of components that discharge to the QT

11. Briefly describe the general purpose of the Component Drain Header. (R11)

12. List the six major uses for the Component Drain Pump. (R8)

13. Describe the basic operation of the Deborating Demineralizers to include: (R10)

    13.1 Primary purpose

    13.2 When the Deborating Demineralizers are used

14. Briefly describe the test method of the: (R9)

    14.1 PT/0/A/150/53, Coolant Storage System Leakage Test

    14.2 PT/0/A/251/08, CS-73 Functional Test

15. For PT/0251/003, CBAST Pump Test, describe: (R14)

    15.1 The purpose

    15.2 How the test is performed

16. Given a copy of PT/0251/003, CBAST Pump Test, and a set of data, evaluate if the acceptance criterion is being met. (R15)

17. For PT/0251/017, RC BTP Pest, describe: (R16)

    17.1 The purpose

    17.2 How the test is performed

18. Given a copy of PT/0251/017, RC BTP Test, and a set of data, evaluate if the acceptance criterion is being met. (R17)

1 POINT

Question 33

Which ONE of the following describes normal CC System parameters?

Normal CC Surge **Tank** level is _____ inches and minimum CRD return flow is _____ gpm.

A. 28 – 30 / 138

B. 18 – 30 / 575

C. 80-90 / 138

D. 80 – 90 / 575

Look at Fill chart

Question 33
T2/G1

008A4.07, Component Cooling Water System (CCWS)
Ability to manually operate andlor monitor in the control room: Control of minimum level in the CCWS surge tank (2.9*/2.9)

Answer: A

A. Correct, normal CC Surge Tank is 18 - 30 inches and minimum CRD return flow is 138 gpm.

B. Incorrect, first part correct. Second part incorrect. This is the total CC flow required to start the standby CC pump.

C. Incorrect, first part incorrect. This is the normal level for the RCW Tank, QT and LDST. Second part correct.

D. Incorrect, first part incorrect This is the normal level for the RCW Tank, QT and LDST. Second part incorrect. This is the total CC flow required to start the standby CC pump.

Technical Reference(s):

Proposed references to be provided to applicants during examination: **None**

Learning Objective: **PNS-CC, R9 and R15**

Question Source: **NEW**

Question History: Last NRC Exam _____

Question Cognitive Level: **Memory or Fundamental Knowledge**
Comprehension or Analysis

OBJECTIVES

TERMINAL OBJECTIVE

Upon completion of this lesson, the student will be able to describe the purpose, operation, and response of the Component Cooling System during normal and abnormal plant conditions

ENABLING OBJECTIVES

1. Control Rod Drive Filters
2. Return Penetration Block Valves, CC-7 and CC-8.
3. Drain Tank and Pump
4. RIA-50
5. Describe the corrosion inhibitor used in the CC System, how it protects the system, and its associated hazard to personnel. (R6)
6. List the CC System controls and indications available to the operator in the control room. (R8)
7. **Describe briefly the steps involved in startup of the CC System. (R9)**
8. Describe the sequence and precautions necessary while valving in the spare CC cooler.
9. Explain the reason for draining the CRD service structure prior to pulling the reactor vessel head prior to refueling. (R11)
10. Describe the method of draining the CRD service structure. (R12)
11. Explain how CC-8 failing closed at power affects plant operation. (R13)
12. Describe briefly the steps involved in reopening CC-8 after the valve has failed closed because of a loss of Instrument Air. (R14)
13. **Describe the six (6) interlocks and/or automatic actions associated with the CC System. (R15)**
14. Explain why the CC System must be in operation: (R16)

    14.1 Before letdown is established if RCS temperature is > 120° F

E. High Letdown temperature effects on the RCS

1. As Letdown temperature increases, the demineralizer in service will tend to release boron into the system. This will add negative reactivity to the core, resulting in an RCS temperature decrease and/or outward rod motion to maintain the same reactor power level.

2. If temperature reaches 135°F, HP-5, Letdown Isolation will automatically close to protect the downstream demineralizers.

a) When HP-5 closes and letdown isolates, pressurizer level will begin to increase. This causes the RCS volume control valve (HP-120) to close to maintain RCS level.

b) Although letdown and makeup are now essentially stopped, there will remain a net increase in RCS volume (pzr increases) due to the continued flow of seal injection into the RCS.

c) Unit 1 will see an RCS volume increase of ~26 gpm (6.5 gpm/pump of seal flow enters RCS) while Units 2&3 will be ~ 36 gpm (9 pm/pump enters RCS).

d) The operator will utilize AP/*/1700/32, Loss of Letdown, to re-establish proper makeup flow. If this cannot be accomplished, guidance will be given to shutdown.

1) If a shutdown is required, the rate of shutdown will have to be fast enough to reach 15% and begin cooling the RCS before the pressurizer tills, causing RCS pressure control problems and potentially challenging the PORV.

2.6 (OBJ R15) Interlocks Associated With the CC System

A. If in AUTO, the standby CC Pump starts at 575 GPM flow.

B. If de-energized, the CRDs cannot be energized if CC flow is less than 138 GPM to the CRDs.

C. A reactor coolant pump cannot be started if CC Row is less than 575 GPM. Low CC flow will not affect a running RCP.

D. Letdown cooler CC inlet valve CC-1 (CC-2) must be open before letdown cooler inlet valve HP-1 (HP-2) will open.

E. CC-7 and 8 close on actuation of ES Channels 5 and 6 (respectively)

F. If CC-7 or CC-8 goes closed, the CC pumps will trip and automatically restart when CC-7 and CC-8 are reopened.

G. Up on receiving a MFBMP (both MFB's de-energized for ≥ 20 seconds); both CC pumps will receive a start signal.

6. CC RCP Clr Out Temp

2.5 System Operations

A. (OBJ R9) System Startup

1. System is filled and vented with 30 inches established in the CC surge tank. Discharge valve on CC pump to be started is throttled to 1/4 turn open.
2. An operator is stationed at the CC surge tank to maintain 18 - 30 inches tank level.
3. A second operator is stationed at the CC pump discharge valve to throttle it as necessary to prevent losing CC surge tank level as CC system voids fill.
4. One CC pump is started and the operator slowly throttles the pump discharge valve open. The standby pump is placed in AUTO after system flow stabilizes.
5. PT/O/A/251/13 (CC Check Valve Functional Test) is performed.
6. RIA inlet valve is throttled to allow 3 gpm flow through RIA-50.

B. (OBJ R10) Placing the Spare CC Cooler Into and Out of Service

1. It is desired to increase letdown flow for a prolonged period of time or it is desired to isolate the in-service component cooler.

   Note: It is acceptable to increase letdown flow without placing a second CC Cooler in service for a short period of time.
2. The CC cooler LPSW inlet valve is opened and then the CC inlet valve is opened on the cooler to be placed in service.
3. The CC (shell) side of the cooler is vented.
4. The second cooler is then placed in service by simultaneously opening the LPSW and CC cooler outlet valves to prevent upsets in CC temperature.
5. If desired, the standby CC pump is started after verifying that a level of ≥ 18 inches is available in the CC surge tank.
6. To isolate the in-service cooler:
   a) The LPSW and CC cooler outlet valves are closed simultaneously to prevent upsets in CC temperature.
   b) The cooler CC inlet valve is closed.
   c) The cooler LPSW inlet valve is then closed.
   d) The standby CC pump is secured.

1 POINT

Question 34

Unit 1 plant conditions:

INITIAL CONDITIONS:
- Reactor power = 100%
- All systems are in automatic
- A FDW transient occurs

CURRENT CONDITIONS:
- PZR level = 300 inches
- PZR temperature = 644" F
- RCS pressure = 2212 psig

Which ONE of the following correctly describes PZR heater and spray valve status?

A. Htr bank #1 OFF, Htr bank #2 OFF, spray valve OPEN

B. Htr bank #1 ON, Htr bank #2 ON, spray valve CLOSED

C. Htr Bank #1 OFF, Htr Bank #2 ON, spray valve OPEN

D. Htr bank #1 ON, Htr bank #2 OFF, spray valve CLOSED

010K5.01, Pressurizer Pressure Control System
Knowledge of the operational implications of the following concepts as they apply to the PZR PCS: Determination of condition of fluid in PZR, using steam tables (3.5/4.0)

A. Incorrect, first and third part correct. Second part incorrect. Would be true if PZR saturated.

B. Incorrect, first and third part incorrect. Second part correct.

C. Correct, PZR HTR Bank #1 is OFF because RC pressure is > 2155 psig. PZR HTR Bank #2 is energized because PZR is subcooled. (Tsat for ~2200 psia is ~650°F. Psat for 644°F is ~ 2103 psig, but actual RCS (P) is 2200 psig.) Spray valve is open because RCS pressure is above its opening setpoint.

D. Incorrect, all three parts incorrect.

Technical Reference(s):

Proposed references to be provided to applicants during examination: None

Learning Objective: PMS-PZR, R5, 22, 27, 29

Question Source: Bank # PNS140501

Question History: Last NRC Exam _____

Question Cognitive Level: Memory or Fundamental Knowledge
Comprehension or Analysis

TRAINING OBJECTIVES

TERMINAL OBJECTIVE

1. Upon completion of this lesson, the student will demonstrate an understanding of the components, indications, controls and operation of the Pressurizer. The student will be abte to assess the status of the Pressurizer during normal, abnormal and emergency conditions and determine corrective actions for improper system operation. The student will also be able to apply any ITS/SLC Conditions and Required Actions associated with the Pressurizer (T1).

ENABLING OBJECTIVES

1. Explain the design basis of the pressurizer. (R21)

2. Describe pressurizer response during load or RCS temperature changes. (R1)(R2)(R3)

3. Given a set of conditions, calculate the change in pressurizer level for a change in RCS temperature. (R33)

4. Explain what is meant by a "subcooled" pressurizer and how to determine if the pressurizer is in a subcooled condition.(R22)(R27)

5. Explain what is meant by a pressurizer "hard bubble" and describe the adverse effects of a "hard bubble" on plant operation, (R23)

8. Identify the source of pressurizer spray for each unit. (R4)

7. Discuss the automatic setpoints and any interlocks associated with pressurizer instrumentation. (R5)

8. Explain the operation of the ICS RC pressure signal median select function as it relates to RC pressure control including: (R28)

   8.3 How median select chooses the'controlling signal

   8.2 Which pressurizer components receive a median selected RC pressure signal.

9. Given a set of conditions, determine which RC pressure signal has been selected for control by the ICS RC pressure signal median select function. (R36)

10. Discuss the reasons for bypass flow around the pressurizer spray valve during normal operation. (R6)

11. Evaluate plant response to a failed open pressurizer spray valve without operator action. (R20)

12. Explain the operation of the Pressurizer Water Space Saturation Recovery Circuit. (R29)

13. Discuss the operation of the pressurizer heaters including: (R7)

    13.1 Three purposes of pressurizer heaters.

    13.2 Purpose and level of interlock associated with pressurizer heaters.

14. Describe the physical operation of the PORV including what causes the Pilot Valve to operate and how this causes the PQRV to open or close. (R8)

15. Explain the purpose of the two opening setpoints associated with the PORV. (R9)

16. Explain how to manually operate the PORV. (R37)

17. Given a set of conditions, determine operability of the PQRV following a loss of power. (R30)

18. Discuss the reason for the pressurizer safeties and their setpoint. (R12)

19. Given a set of plant conditions, determine the response of Pressurizer level. (R14)(R15)

20. Explain the operation of SASS as it relates to pressurizer level control. (R31)

21. Given a set of conditions, determine how pressurizer Bevel controllindication Is affected by a loss of SASS and/or ICCM. (R35)

22. Discuss the use of PressurizesSaturation Pressure Indication by the operator. (R16)

23. Discuss the forming of a pressurizer steam bubble including any precautions to be taken during the evolution. (R17)

24. Given a completed copy of PT/0/A/201/04 _RC66 Stroke Test apply compare data taken to acceptance criteria to determine PQRV operability. (R10)(R11)

25. Differentiate between a pressurizer steam space leak and a water space leak. (R32)

26. Given a set of plant conditions, determine the position of the PQRV. (813)

27. Given a set of conditions, calculate the expected PORV discharge temperature. (R34)

28. Given a copy of a Limit and Precaution from OP/A/1103/05, Pressurizer Operation, be able to state the reason for that limit and precaution. (R18)

29. Apply ITS/SLC's rules to determine applicable Conditions and Required actions for a given set of Pressurizer conditions. (R24)

3. An outsurge also occurs during a power increase when >15% power. RCS hot leg temperature will increase. but cold lea temperature will decrease. Since there is more total cold leg volume than hot leu volume in the RCS, the overall coolant volume will decrease resulting in an outsurge. However, this relatively small outsurge will be masked bv the action of the pressurizer level controller to increase HPI makeup to the RCS.
4. A more rapid outsurge can occur due to an upset in the primary/secondary system heat balance, (i.e., main steam line rupture) that can result in the rapid contraction of RCS volume.

C. **Subcooled** Pressurizer **(OBJ.R22, R27)**

1. The contents of the pressurizer are normally maintained at the saturation temperature for the desired RCS pressure. This corresponds to a pressurizer temperature of ~ 648" F for an RCS pressure of 2155 psig.
2. A condition referred to as a subcooled pressurizer can occur following a rapid and/or substantial increase in pressurizer volume (i.e., insurge).
3. The insurge of relatively cooler water (604° F vs. 648° F) decreases the temperature of the pressurizer and results in a corresponding decrease in the saturation pressure.
4. Initially, indicated RCS pressure may be increasing due to the compression of the steam bubble by the increasing level in the pressurizer.
5. However, once the level in the pressurizer has been stabilized, RCS pressure will begin to slowly decrease towards its new saturation temperature as the steam bubble condenses and contracts.
6. It is important for the operator to both recognize that subcooled conditions exist in the pressurizer and understand the potential implications associated with this condition.
   a) Following a transient at power, a pressurizer temperature of 620° F would result in an RCS pressure of ~ 1772 psig which, in turn, would result in an RCS low pressure reactor trip.
   b) Following a post reactor trip transient, a pressurizer temperature of 600° F would result in an RCS pressure of ~ 1535 osig which, in turn, would result in ES actuation.
7. Following a transient which results in a subcooled pressurizer. the operator should determine what the new saturation pressure will be for the existing pressurizer temperature. If this pressure is below the RPS low pressure trip setpoint or ES actuation setpoint, the operator may be required to slowly increase pressurizer level in an attempt to maintain RCS pressure constant until the pressurizer heaters can restore normal pressurizer temperature.

2. Per Technical Specification 3.4.9, the maximum allowable pressurizer level is ≤ 285" in MODES 1.2 and 3 with RCS temperature ≥ 325° F. This maximum level is based on a startup accident and a loss of MFW. Per an engineering calculation that includes instrument error, Ops has determined that the TS will be entered at 260" increasing Pzr level.

E. Since all sources of heat in the system, i.e., core, pressurizer heaters, and reactor coolant pumps, are interconnected by the reactor coolant piping with no intervening isolation valves, system pressure relief protection is provided OR the pressurizer. Overpressure protection consists of two code safety valves and one electromatic relief valve

2.4 Component Description

(Instructor Note: The non-nuclear instruments (NNI) inputs that are used in the control of pressurizer level, temperature and pressure are also inputs to the digital Integrated Control System (ICS). NNI inputs to pressurizer level, temperature and pressure control may be modified by ICS. As such, pressurizer level, temperature and pressure control can be considered to be a sub-function of ICS. Operation of NNI is addressed in the Reactor Coolant Instrumentation (RCI) lesson plan and operation of the ICS is addressed in the Integrated Control System lesson plan.)

A. Pressurizer Spray (PNS-PZR-1, 3, 4 & 15)

1. **(OBJ.R14)** The pressurizer spray line originates at the discharge of the A I RCP for Unit 1, and B1 RCP on Units 2 & 3.
2. Spray flow is caused by the difference in pressure between RCP discharge and vessel outlet due to head losses as the coolant flows through the vessel.
3. Pressurizer spray flow is controlled by a DC solenoid operated valve, RC-1, which responds to a manual open/close signal from the operator or automatically from the opening and closing pressure set points.
   a) **(OBJ.R5)** RC-1 opens at 2205 psig increasing pressure and doses at 2155 psig decreasing pressure.
   b) **(OBJ.R28)** RC-1 is controlled by the ICS median selected narrow range (NR) RCS pressure signal.
      1) The inputs to the ICS RC pressure signal median select function are:
         a. RC pressure #1 on RCS loop A (input to RPS chan. A)
         b. RC pressure #2 on RCS loop B (input to RPS chan. E)
         c. RC pressure #3 on RCS loop A (input to RPS chan. B)
      2) Median select refers to the mathematical technique of selecting the middle of three signals as an output.

6. Pressurizer Heater Bank 2 -can be controlled from each unit's Aux Shutdown Panel

   a) OFF / NORMAL / ON – switch positions are selected; in NORMAL control can only be from the Control Room

7. Pressurizer Heater Bank 2- Group B- not only can be controlled from the ASP (when all of Bank 2 is being operated), but it can also be operated from the SSF.

   a) Group B is normally powered from MCC 1, 2, 3XSF, which is normally fed from load center 1, 2, 3X8.

   b) However when powered from the SSF diesel, Group B can only be controlled from the SSF unit control board controls.

      1) Low level heater cutoff -105" SSF Pzr level-uncompensated

8. The pressurizer heaters for each unit are normally supplied from non-safety related motor control centers **(MCCs)** XH, XI, XJ, and XK. The pressurizer heaters are divided among the three 4160 volt ES buses such that the **loss** of one entire 4160 volt bus will not preclude the capability to supply sufficient pressurizer heaters to maintain natural circulation in MODE 3.

9. Pressurizer Water Space Saturation Recovery Circuit

   In addition to being controlled by the ICS median selected narrow range (NR) RCS pressure signal, Pressurizer Heater Bank #2 also receives a controlling signal from the Pressurizer Water Space Saturation Recovery Circuit.

   a) The purpose of this circuit is to automatically detect subcooled conditions in the pressurizer and energize a limited number of heater assemblies in order to reestablish saturated conditions (for the current RCS pressure).

   b) Pressurizer temperature 'C' is applied to a function generator to predict the corresponding saturation pressure (i.e., the predicted RCS saturation pressure for the current pressurizer temperature).

   c) If the predicted saturation pressure for the current pressurizer temperature is significantly below the actual RCS pressure, heater bank 2 is in AUTO, and control is from the control room, the circuit will energize heater bank #2 in order to reestablish saturated conditions for the current RCS pressure.

   d) A 20 psig dead band is applied to minimize cycling of the heater bank.

10. Pzr bow Level Heater Cutoff - 80" (compensated Pzr level) interiock deenergizes the heaters to prevent damage while they are uncovered

Question 257 PNS140501 PNS140501

initial plant conditions:

- Unit #3 is operating at 100% power
- Ail systems are in automatic

A FDW transient has occurred.

Current RCS conditions:

- PZR level = 300 inches
- PZR temperature = 644° F
- RCS pressure = 2212 psig

Which ONE of the following correctly **describes** PZR heater and spray valve status? (.25)

A) Htr bank #1 OFF, Hts bank #2 OFF, spray valve OPEN

B) Htr bank #1 **ON,** Htr bank #2 ON, spray valve CLOSED

C) Htr Bank #1 OFF, Htr Bank #2 ON, spray valve OPEN

D) Htr bank #1 ON, Htr bank #2 OFF, spray valve **CLOSED**

Answer 257

C.

-RC pressure is > 2155 psig so PZR HTR Bank #1 is OFF.

-PZR Water Space Saturation Recovery circuitry senses the PZR is subcooled for an RCS pressure of 2210 psig so PZR HTR Bank #2 is energized. Tsat for –2200 psia is –650°F. Psat for 644°F is ~ 2103 psig, but actual RCS (P) is 2200 psig.

-RC pressure of 2210 is ≥ RC-1 setpoint so spray valve is open.

1 POINT

Question 35

Unit 1 plant conditions:

INITIAL CONDITIONS:
- Reactor power = 20%
- Unit startup in progress
- All RCPs operating

CURRENT CONDITIONS:
- Reactor tripped
- Reactor power = 1% and decreasing
- RCS pressure = 1950 psig and decreasing
- Condenser vacuum = 19 inches and decreasing
- 1A2 RCP tripped

Which ONE of the following is the cause of the reactor trip?

A. bow RCS pressure.

B. Power to flow to imbalance.

C. Main turbine anticipatory trip.

D. Loss of feedwater anticipatory trip.

Question 35
T2/G1

012K1.08, Reactor Protection System
Knowledge of the physical connections and/or cause effect relationships between the RPS and the following systems: MFW (2.9*/3.1)

Answer: D

A. Incorrect, RCS pressure > 1810 psig.

B. Incorrect, Rx power < minimum flux/flow/imb trip setpoint. Would trip from 100% power.

C. Incorrect, Rx power < 27.75% and decreasing, turbine anticipatory trip bypassed.

D. Correct, Operating MFDWP tripped on low vacuum.

Technical Reference(s):

Proposed references to be provided to applicants during examination: **None**

Learning Objective: **IC-RPS, R3**

Question Source: **Bank # IC090301**

Question History: Last NRC Exam _____

Question Cognitive Level: Memory or Fundamental Knowledge
Comprehension or Analysis

OBJECTIVES

TERMINAL OBJECTIVES

1. Describe the function and correct operation of the Reactor Protective System during all modes of plant operation, including specific limits or precautions associated with the particular component or operation. (T1)

2. Discuss all inputs and signals used in the RPS that affect the specific operation-related functions associated with the RPS. (T2)

3. Describe or identify the purpose of each indicator, control, and indicating light in the RPS that provides operator-related information. (T3)

4. Evaluate normal and off normal system operation and predict RPS and plant response to specific degraded components within the RPS, OF components or power supplies that feed the RPS. Analyze the status of the RPS and the plant and develop a plan to return the system to normal. (T4)

ENABLING OBJECTIVES

1. List the two general components that the RPS is designed to protect. (R1)

2. List the two basic methods employed by the RPS to protect the fuel rod clad and RCS. (R2)

3. List all eleven variables in RPS that will initiate a reactor trip, and where applicable, the maximum or minimum allowable setpoint at which trig will occur. (R3)

4. For each trip, choose which of the two general components (fuel dad or RCS) each of the tripping parameters in RPS is designed to protect, and be able to describe the basis of the protection afforded by each. (R4)

Question 193 IC090301 IC090301

Unit 1 conditions:

INITIAL CONDITIONS:

- Reactor power = 20%
- Unit startup in progress
- All **RCPs** operating

CURRENT CONDITIONS:

- Reactor tripped
- Reactor power = 1% and decreasing
- RCS pressure = 1950 psig and decreasing
- Condenses vacuum = 19 inches and decreasing
- 1A2 RCP tripped

Which ONE of the following is the cause of the reactor trip? (.25)

A. Low RCS pressure.

B. Power to flow to imbalance.

C. Main turbine anticipatory.

D. Loss of feedwater anticipatory trip.

Answer 193
D
A. Incorrect - RCS pressure > 1810 psig.
B. Incorrect - Rx power < min. flux/flow/imb trip setpoint
C. Incorrect- Rx power < 27.75% and decreasing, turb. anticipatory trip bypassed.
D. Correct -

1 POINT

Question 36

Unit 1 plant conditions:

INITIAL CONDITIONS:
- Main Steam leak in the Reactor Building
- ES Channels 1 - 6 have actuated

CURRENT CONDITIONS:
- The Main Steam leak has been isolated
- Reactor Building pressure is 1 psig and slowly decreasing

Which ONE of the following describes the proper method for returning **ES** channels 5 and 6 (RB cooling and essential isolation) to normal?

Depress the…

A. yellow MANUAL pushbutton for each component on Channel 5 & 6 RZ modules, place components in Non-ES state; then depress the blue AUTO pushbutton on the RZ module.

B. yellow MANUAL pushbutton for each component on Channel 5 & 6 RZ modules; place components in NON-ES state; then depress the blue RESET switches for ES Digital Channels 5 & 6.

C. red output state reset switch on the RB pressure 3# trip bistable in each Analog Cabinet; then depress the blue RESET switches for **ES** Digital Channels 5 & 6.

D. red output state reset switch on the RB pressure 3# trip bistable in each Analog Cabinet; then depress the blue AUTO pushbuttons on the RZ module.

Question 36
T2/G1

013K4.02, Engineered Safety Features Actuation System (ESFAS)
Knowledge of ESFAS design feature(s) and/or interlock(s) which provide for the following: Containment integrity system reset (3.9/4.2)

Answer: C

A. Incorrect- Depressing the yellow manual pushbutton on the RZ module gives control of the components to the control room operators. When the blue AUTO pushbutton is depressed the component will return to its ES state.

B. Incorrect- depressing the yellow manual pushbuttons gives the operator control of the component. The individual analog bistables have to be reset by depressing the red output state reset switch.

C. Correct- depressing the red output state reset switch will reset the analog bistable and the blue reset switch will reset the digital channels.

D. Incorrect- the red output state reset switch will reset the RB 3# bistable; however it is not necessary to depress the blue AUTO pushbuttons on the RZ module.

Technical Reference(s):

Proposed references to be provided to applicants during examination: **None**

Learning Objective: **IC-ES. R13**

Question Source: **Bank # IC031302 (modified)**

Question History: Last NRC Exam _____

Question Cognitive Level: **Memory or Fundamental Knowledge**
Comprehension or Analysis

12.1 Analog channels

12.2 Digital channels

12.3 Analog and Digital channels simultaneously

13. Explain the actions necessary to manually trip andlor reset an analog or **digital** ESG channel. **(R13)**

14. Predict the emergency operation of the ESG analog and digital channels in response to a LOCA that results in RCS pressure gradually decreasing to ≈100 psig accompanied by a gradual increase in Reactor Building pressure to ≈15 psig. (R14)

15. Discuss the proper operation of all RZ Module controls and indications located on a unit's vertical control board in the Control Room. **(R15)**

16. Discuss and properly apply the guidance associated with repositioning ES equipment following an ES actuation. (RIB)

17. Describe the actions necessary to properly return HPI pumps. Reactor Building Coding Units and Keowee Hydro Units to normal operation following ES actuation. . **(R17)**

18. Discuss and properly apply the limits and precautions associated with the ESG System. (R18)

3. Manual Trip and Reset of ES Channels **(OBJ. R13)**

a) Analog channels

1) Individual portions, HPI, LPI and RB pressure (4 psig), can be manually tripped by taking the rotary switch on the associated Pressure Test Module to the "Test Operate" position. There is one test module for WR RC pressure which will trip both the HPI and LPI bistables, and a separate test module for NR RIB pressure which will trip the 3 psig RB pressure bistable.

2) Located in each Analog channel are the RC Pressure bistable modules (one for 1600# and one for 550#) and the Reactor building pressure trip bistable module.

If tripped, these three modules, and thus the channel, can be reset by depressing the "output state" toggle switch (located on each bistable module) for each bistable that has tripped, when WC pressure is > 1600# (HPI), > 550# (LPI), or RB pressure < 3#.

3) As stated earlier, no action is required to reset analog channel outputs feeding channels 7 & 8. When RB pressure is < 10 psig the output signal will clear.

b) Digital channels

1) Can be manually tripped at the manual trip/reset panel in control room.

Refer to OC-IC-ES-10

2) Channels 1-6 can be reset at same location if at least 2 out of 3 analog channels are reset.

3) Channels 7 & 8 can be reset at same location when RB pressure switches have reset (RIB pressure < 10 #).

NOTE: At one time, it was thought thaf if portions of an ES channel were in manual and in their Non-ES positions, the components could be returned to their ES positions by depressing the manual digital channel reset buttons and then releasing them. This was incorrect. If individual components have been selected to manual, their respective RZ Module "AUTO" pushbuttons must be depressed in order to automatically reposition those components with the ES signal unless the ES signal is completely cleared (analog and digital) and reinitiated.

Question 78 IC031302 IC031302

Plant conditions:

- ES Channels 1 and 2 have actuated on low RCS pressure as a result of a main steam leak outside of the reactor building.
- The Main Steam leak has been isolated.
- RCS temperature and pressure have been stabilized at ≈ 555°F and 2155 psig.

Which ONE of the following describes the proper method for returning ES to normal? (.25)

A) Depress the yellow MANUAL pushbutton for each component on Channel 1 & 2 RZ modules, place components in Non-ES state; then depress the blue AUTO pushbutton on the RZ module.

B) Depress the yellow MANUAL pushbutton for each component on Channel 1 & 2 RZ modules; place components in NON-ES state; then depress the blue RESET switches for ES Digital Channels 1 & 2.

C) Depress the red output state reset switch on the 1600# (HPI) trip bistable in each Analog Cabinet; then depress the blue AUTO pushbuttons on the RZ module.

D) Depress the red output state reset switch on the 1600# (HFI) trip bistable in each Analog Cabinet; then depress the blue RESET switches for ES Digital Channels 1 & 2.

Answer 78
D

A. Incorrect-Depressing the yellow manual pushbutton on the RZ m dule gives control of the components to the control room operators. When the blue AUTO pushbutton is depressed the component will return to its ES state.
B. Incorrect-depressing the yellow manual pushbuttons gives the operator control of the component. The individual analog bistables have to be reset by depressing the red output state reset switch.
C. Incorrect-the red output state reset switch will reset the 1600# bistable; however it is not necessary to depress the blue AUTO pushbuttons on the RZ module.
D. Correct- depressing the red output state reset switch will reset the analog bistable and the blue reset switch will reset the digital channels.

1 POINT

Question 37

Which ONE **of** the following is the **actual setpoint** for starting the Reactor Building Cooling Units?

A. RCS pressure = 1600 psig

B. RCS pressure = 550 psig

C. Reactor Building pressure = 10 psig

D. Reactor Building pressure = 3 psig

Same condition that would start the

Question 37

T2/G1

022A3.01, Containment Cooling System (CCS)
Ability to monitor automatic operation of the CCS, Including: Initiation of safeguards mode of operation (4.1/4.3)

Answer: D

A. Incorrect, setpoint for High Pressure Injection, Keowee Emerg. Start and RB Non-Essential Isolation.

B. Incorrect, setpoint for **Low** Pressure Injection and LPSW.

C. Incorrect, setpoint for Reactor Building Spray. This **is** the setpoint not will it actuate at this pressure.

D. Correct, setpoint for Reactor Building Cooling, Penetration Room Ventilation and RB Essential Isolation.

Technical Reference(s):

Proposed references to be provided to applicants during examination: **None**

Learning Objective: **IC-RPS, R3**

Question Source: **NEW**

Question History: Last NRC Exam _____

Question Cognitive Level: **Memory or Fundamental Knowledge**
Comprehension or Analysis

OBJECTIVES

TERMINAL OBJECTIVE

1. Properly describe the operation of all components of the ESG system during normal, inadvertent, and emergency operations. (T1)

ENABLING OBJECTIVES

1. State the purpose of the Engineered Safeguards System. (R1)

2. List the input signals and the sources of power for the Engineered Safeguards analog subsystem. (R2)

3. **State the function of the following components located in the ES analog cabinets including any associated setpoints: (R3)**

   3.1 RC Pressure Trig Bistable Modules (HPI and LPI)

   3.2 RC Pressure inhibit Bistable Modules (HPI and LPI)

   3.3 RC Pressure Test Module

   3.4 RB Pressure Trip Bistable Module

   3.5 RB Pressure Test Module

   3.6 High RB Pressure Contact Buffers

4. Diagnose the status of an ESG Analog channel from the indicating lights provided above each ESG cabinet. (R4)

5. List the input signals and the sources of power for the Engineered Safeguards digital subsystem. (R5)

2. LECTURE PRESENTATION

2.1 System Overview

A. The Engineered Safeguards System monitors selected plant parameters that are indicative of the occurrence of a major loss-of coolant accident (LOCA). These parameters are reactor coolant system pressure and reactor building pressure. If these parameters reach trip setpoints, associated subsystems are actuated.

B. Protective Actuation Functions and Associated Setpoints

Listed below are the general protective actuation functions that are initiated by the ES system:

Refer to OC-IC-ES-18

	TS Setpoint	Actual Setpoint
High Pressure Injection, Keowee Emerg. Start and RB Non-Essential Isolation	RCS ≥ 1590 psig OK RB ≤ 4 psig	RCS 1600 psig OR RB 3.0 psig
Low Pressure Injection and LPSW	RCS ≥ 500 psig OR RB ≤ 4 psig	RCS 550 psig OR RB 3.0 psig
Reactor Building Cooling, Penetration Room Ventilation and RB Essential Isolation	RB 6 4 psig	RB 3.0 psig
Reactor Building Spray	RB ≤ 15 psig	RB 10 psig

These functions are discussed in the following sections.

1. HPI, Keowee Emergency Start and Reactor Building Non-Essential Isolation

   The purpose of HPI system initiation is to assure that sufficient water from the **BWST** flows into the RCS to control reactor coolant inventory and to provide core cooling during certain LOCAs. HPI system initiation will **also** help control core reactivity through injection of boron into the RCS.

1 POINT

Question 38

Unit **1** plant conditions:

INITIAL CONDITIONS:
- SBLQCA
- RCS pressure = 1059 psig
- RB pressure = 23 psig
- Enclosure 5.12 (ECCS Suction Swap to RBES) in progress

CURRENT CONDITIONS:
- RCS pressure = 972 psig
- RB pressure = 18 psig
- BWST level = 8.5 feet
- 1LP-19 fails to open

Which ONE of the following is correct?

ASSUME 1LP-19 REMAINS CLOSED

Stop the…

A. 1A LPI immediately.

B. 1A RBS and 1A LPI immediately.

C. 1A RBS pump and when BWST level is ≤ 6 feet stop 1A LPI pump.

D. 1A LPI pump and when BWST level is ***I 6*** feet stop 1A RBS pump.

Question 38
T2/G1

02682.07, Containment Spray System (CSS)
Ability to (a) predict the impacts of the following malfunctions or operations on the CSS; and (b) based on those predictions, use procedures to correct, control, or mitigate the consequences of those malfunctions or operations: Loss of containment spray pump suction when in recirculation mode, possibly caused by clogged sump screen, pump inlet high temperature exceeded cavitation, voiding, or sump level below cutoff (interlock) limit (3.6/3.9)

Answer: C

A. Incorrect, 1A LPI pump is not stopped until BWST level < 6 feet. Water still needs to be used from the BWST.

B. Incorrect, both pumps are not stopped immediately. The LPI pump remains in operation to use more BWST water. 1A LPI pump is not stepped until BWST level < 6 feet.

C. Correct, the RBS pump is initially stopped. The LPI pump continues to operate to ensure adequate water is removed from the BWST. The LPI pump is stopped at ≤ 6 feet if 1LP-19 is not opened.

D. Incorrect, the order is reversed. The RBS pump is initially stopped. The LPI pump continues to operate to ensure adequate water is removed from the BWST. The LPI pump is stopped at ≤ 6 feet if 1LP-19 is not opened.

Technical Reference(s):

Proposed references to be provided to applicants during examination: None

Learning Objective: EAP-LQSCM, R34

Question Source: NEW

Question History: Last MRC Exam _____

Question Cognitive Level: Memo9 or Fundamental Knowledge
Comprehension or Analysis

Objs. R: 42, 43, 44, 45 Covered in Rule 3 Training-

2. Explain how a single MBEFBWP is aligned to both SGs. **(R42)**

3. Explain why operation of the condensate system Is preferred during extended EFDW Operation. **(R43)**

4. Describe actions taken pes enclosure 5.9, Extended EFDW Operation to maintain UST inventory. **(R44)**

5. Explain the actions required to establish suction source to the EFDW pumps from the Hotwell. **(R45)**

Objs. To Be Covered in **LOSCM** Tab and **Encl. 5.12** Training

6. Recognize that, provided HPI/LPI is operating, subcooling margin should be restored within –10 minutes unless a large break LOCA has occurred. **(R11)**

7. Given a set of plant conditions determine the correct actions to take using LOSCM (Loss of Subcooling Margin) section of the EOP. **(R12)**

8. Explain why **HPI** piggyback operation may be required during SBLOCAs. **(R16)**

9. State when the LOSCM section should be entered. **(R1)**

10. Explain the reason for determining if the cause of LOSCM is due to over-cooling. **(R5)**

11. State the symptom in the EOP that is used to determine that SG heat removal will not be required during a LOCA. **(R10)**

1%. Given a copy of Figure 1, Total Required HPI Flow, be able to determine, for a given set of conditions, whether a Rapid WCS Cooldown is required. **(R17)**

13. Describe the two (2) actions taken to mol and depressurize the RCS if total HPI flow is not adequate or if it cannot be established to each header. **(R18)**

24. Discuss the reasons for not attempting to depressurize the RCS to LPI conditions by opening the **PORV** when SCM is lost and HPI is not available. **(R19)**

15. Describe the basis for swapping LPI and RBS suction to the RBES when the BWST level decreases to 19 feet. **(R20)**

16. Given a set of system failure conditions, assess the situation and determine the correct contingency actions. **(R34)**

f7. Describe the differences in actions taken to swap suction to the RBES between a SBLOCA and a LBLOCA. **(R21)**

18. Explain the actions taken to control HPIP recirc flow. **(R29)**

2.25 *Step 24:* __ **WHEN** *BWST level is* ≤ **9', AND** *RB level is rising, THEN continue in this enclosure.*

A. *Hold* **step** *to wait for a BWST level of 9 feet and a rising Reactor Building level.*

1. *UFSAR guidance says fhat we begin the swap when the BWST low Level alarm is received.*
2. *The alarm actuates at 9 feet.*
3. *Guidance is given to comply with the UFSAR.*
4. *The requirement for the RB level increasing ensures fhat the water is going to the Reactor Building and is available for taking suction.*
5. **(OBJ. R22)** *Assures time is available to complefe required valve manipulations prior to BWST depletion.*

B. *Waif here until conditions ob continue are met*

2.26 Step 26: *Simultaneously open the following:*

__ 1LP-19

__ 1LP-20

RNO: 1. __ **IF** 1LP-19 **fails** *to open, THEN* **stop** *the* 1A RBS *Pump*

2. __ **IF** *1LP-20 fails to open, THEN* **stop** *the* 1B RBS *Pump*

A. *Guidance is given to simultaneously open LP-19 and 20 (RBES Suction Valves).*

1. **(OBJ. R33)** *Valve stroke time for these valves is > I minute.*
2. *Stroke time must be taken* **into** *consideration when making the swap from the BWST to the RBES.*
3. *Opening these valves simultaneously means that the stroke times are in parallel rather than series.*
4. *If these valves are stroked and one appears to have a burned* **out** *fight buib do not take the dime to change the light bulb.*
   a) *Monitor the progress of the valve with the good position indication.*
   b) *When the valve with good position indication opens fully, allow a few more seconds for the valve in question to open.*
   c) *If the valve in question does not indicate open, loses power, or fails to operate, then perform the contingency actions.*
5. *The intent of this step is to attempt to open bofh valves* **at** *the same time to save dime in the swap to the RBES.*

B. ***RNO: Contingency actions. Stopping** the **RBS pump will slow down the rate of level decrease while waiting on < 6' In the BWST.***

2.27 Step 27: __ IAAT BWST is ≤ 6', THEN perform Steps 28 – 32.

RNO: __ GOTO Step 32.

A. Continue w%hthe enclosure.

4. (OBJ. R35 & 36) This is to get as much inventory out of the BWST as possible before swapping to the sump. LOCA analysis assumes 40 feet of wafer transferred from the BWST info containment Assuming TS minimum of 46 feet at beginning, must be ≤6 feet.

2. If there is a slight difference in BWST indications, use the lowest value.

a) (OBJ. R23) The condition of the BWST level at this time is dependent upon reactor building pressure.

b) If Reactor Building pressure is greater than 10 psig, the head from the RBES will be higher than the head from the BWST. At this low level, the LPIPs and RBSPs will take suction from the RBES. When fhis happens, the BWST level will stop decreasing and begins to draw a straight line.

c) When building pressure becomes less than 10 psig the head from the BWST and the RBES wiil begin to equalize and the pumps will start taking suction off of the BWST again. BWST level will begin to decrease.

d) The BWST level can begin to drop at a relatively fast rate because not only will the LPI and RBS pumps be taking suction but there will also be some gravity feed from the BWST to the RBES.

3. If BWST level is not continuing to decrease. the operator will continue to the steps that isolate the BWST suction.

B. RNO: If BWST level is < 9' but still greater than 6', continue on until IAAT for 6' is met.

2.28 Step 28: __ Verify 1LP-19 is open

RNO: __ Stop the 1A LPI Pump

2.29 Step 29: __ Verify 1LP-20 is open

RNO: __ Stop the 1B LPI Pump

2.30 Step 30: Simultaneously close the following:

__ 1LP-21

__ 1LP-22

RNO: 1. __ IF 1LP-21 fails to close, THEN stop the 1A LPI Pump and 1A RBS Pump

2. __ IF 1LP-22 fails to close, THEN stop the 1B LPI Pump and 1B RBS Pump

A. Most efficient use of valve stroke time

B. RNO: The LPIP and RBSP on the suction header with the failed valve will have to be secured. If we are unable to isolate the suction header from the BWST, the pumps will eventually draw air into their suctions as the level continues to decrease.

Later action will close the BWST outlet valve (LP-28) and return these pumps to operation.

2.31 Step 31: __ Dispatch an operator to close 1LP-28 (BWST Outlet)(East of Unit 1 BWST).

A. (OBJ. R37) This provides backup isolation for the LPIP suction from the BWST. Prevents highly activated water from leaking past check valves and increasing doses outside.

B. Any LPIPs that were secured because of the failure of the associated BWST suction valve to close will become operable when LP-28 is closed.

2.32 Step 32: __ Verify two LPIPs operating.

RNO: 1. __ Maximize total LPI flow < 3000 gpm by throttling HPI flow.

2. __ Limit total HPI flow to < 750 gprn including seal injection

A. Two LPIPs operating is preferred.

B. RNO: If only one LPIP is operating then LPI and HPI flow limits must be met.

2.33 Step 33: __ IAAT an operating LPI Pump (A or B) fails, TMEN perform Steps 34 - 42.

RNO: __ GO TO Step 43.

A. Description of Step 34 - 42: Handling of Pump Failures

1. The cross-tie mod changed the manner in which pump failures are handled. If an LPI pump is operating it is no longer necessary to cross-tie through LP-9 & 10.

2. The new arrangement checks for any pumps running, and if not, attempts to start an available A or B LPI pump. If the pump is running or started then the valve alignment is checked.

3. if A or B pump cannot be started then the alignment is made to start the C LPI pump and align its discharge to only one header through eifher LP-9 or 10.

a) LPSW is then checked to ensure cooling.

b) Step 42 ensures fhe correct flow limits are maintained for total LPI and HPI. In both cases HPI is throttled to meet the limits.

1 POINT

Question 39

Which ON€ of the following describes the design function of Main Steam Stop Valve (MSSV) #2?

MSSV #2…

A. is able to open against full Main Steam pressure due to having *a* larger EHC piston.

B. *is* the only MSSV that has an automatic steam lead drain to lower upstream pressure.

C. has an internal bypass valve to raise MS Chest pressure for lowering the delta-p across the MSSVs.

D. **has** the Master/Slave relationship with the Main Steam Control Valve #2 to allow and control steam admission to the High Pressure Turbine.

Question 39
T2/G1

03962.1.28, Main and Reheat Steam System
Knowledge of the purpose and function of major system components and controls. (3.2/3.3)

Answer: C

A. Incorrect, can open due to bypass valve.

B. Incorrect, steam lead drain is not used to **lower** upstream pressure

C. Correct, has an internal bypass valve to raise MS Chest pressure for lowering the delta-p across the MSSVs.

D. Incorrect. does not have a master/slave with the MSCV **#2.**

Technical Reference(s):

Proposed references to be provided to applicants during examination: **None**

Learning Objective: **STG-MT, R4**

Question Source: **Bank # STG160403**

Question History: Last NRC Exam _____

Question Cognitive Level: **Memory or Fundamental Knowledge**
Comprehension or Analysis

TRAINING OBJECTIVES

TERMINAL OBJECTIVES

1. At the condusion of this lecture, the student will be able to:
2. Describe the purpose and operation of the main turbine and its related components.
3. Explain the function of and purpose for the various protective actions/devices associated with the main turbine.

ENABLING OBJECTIVES

1. Describe the steam flow path from entry into the high pressure turbine to the exit of the low pressure turbine. (R1)
2. Explain what is meant by "Rouble Flow" as it relates to the main turbines at Oconee Nuclear Station. (R2)
3. Explain the two purposes of the Main Steam Stop Valves. (R3)
4. Explain why the # 2 Main Steam Stop Valve has an internal bypass valve. (R4)
5. Explain the purpose of the Control Valve above seat drains. (R5)
6. Explain the purpose of the Reheat Stop Valves. (R8)
7. Explain the purpose of the Intercept Valves. (R9)
8. Explain the purpose of the exhaust hood spray on the Low Pressure Turbines. (R10)
9. Describe the conditions that could result in high exhaust hood temperatures. (R11)
10. Discuss the consequences of high exhaust hood temperatures. (R12)
11. Identify the trip setpoint for "Low Condenser Vacuum". (R13)
12. Explain why the turbine should be placed on turning gear when it is shutdown. (R14)
13. Describe three methods of placing the turbine on turning gear. (R15)
14. Identify the cause of an auto trip of the turning gear motor. (R16)
15. Riscuss the purpose of the extraction check valves. (R17)

b) The normal valve disc is modified:

1) The top portion of the disc Is fabricated into an integral valve seat.

2) Orifices have been milled from the integral valve seat through the bottom portion of the main valve disc.

c) A smaller valve disc is attached to the normal valve stem of the #2 MSSV to mate with the integral valve seat formed into the main valve disc.

1) This smaller valve disc is called the #2 Main Stop Valve Bypass Valve.

2) When the proper *logic* (Shell Warming or Chest Warming) is selected, the operator can position the Bypass Valve disc from a fully shut to a fully open position from the EHC Control Panel in the Control Room.

3) With the Bypass Valve open, steam will flow through the main valve disc and through the orifices in the disc.

4) **The #2 MSSV Bypass Valve is used to:**

(a) (Obj. R4) Slowly warm the HP Turbine Shell prior to placing the MT in service (Shell-Warming).

(b) Slowly warm the Main Control Valve components and the below seat metal of the MSSV's (-the Steam Chest area – Chest Warming) before admitting full steam flow through these valves.

(c) Reduce the ΔP across the MSSV's to allow the valves to open. For this reason, MSSV #2 Is sometimes referred to as the "balancing" valve.

B. Main Control Valves

1. Four Main Control Valves (MS-107, MS-106, MS-109 & MS-108) are located just downstream of the four MSSV's.

2. Physically, the CV's are at the same location as the MSSV's.

3. The outlet of one MSSV is welded directly to the inlet of a CV.

a) MSSV #4 connects to CV #1.

b) MSSV #1 connects to CV #2.

c) MSSV #3 connects to CV #3.

d) MSSV #2 connects to CV #4.

4. Since the four MSSV's are interconnected below their seats, any stop valve will supply any control valve with steam, although at a more reduced rate than if the corresponding stop valve is open.

Question 324 STG160403 STG160403

Which ONE of the following describes the design function of Main Steam **Stop** Valve (MSSV) **#2?**

MSSV #2 ...

A. is able to open against full Main Steam pressure due to having a larger EHC piston.

5. is the only MSSV that has an automatic steam lead drain to lower upstream pressure.

C. has an internal bypass valve to raise MS Chest pressure for lowering the delta-p across the MSSVs.

5. **has** the Master/Slave relationship with the Main Steam Control Valve #2 to allow and control steam admission to the High Pressure Turbine.

Answer 324
C

A. Incorrect, can open due to bypass valve.
B. Incorrect, steam lead drain is not used to lower upsatream pressure
C. Correct, has an internal bypass valve to raise MS Chest pressure for lowering the delta-p across the **MSSVs.**
D. Incorrect, does not have a master/slave with the MSCV #2.

1 POINT

Question 40

Unit 1 plant conditions:

- Reactor power = 75%

Which ONE **of** the following would require entry in to Technical Specifications?

A. Upper Surge Tank level = 5.2 feet

B. "1B" Condensate Booster Pump OOS

C. "1A" Turbine Bypass Valves failed closed

D. 1V-186 (Main Condenser Vacuum Breaker) breaker tagged open

Question 40

T2/G1

056G2.1.33, Condensate System
Ability to recognize indications for system operating parameters which are entry-level conditions for technical specifications. (3.4/4.0)

Answer: A

A. Correct, UST level required to be > 6 feet.

B. Incorrect, although can feed the SGs when main and emergency feedwater is lost, CBPs are not TS required.

C. Incorrect, used to cooldown but are not required by TS.

D. Incorrect, is used to break vacuum so the Hotwell can supply suction to the EFDW pumps but is not TS required.

Technical Reference(s): **TS 3.7.6 (UST and Hotwell)**

Proposed references to **be** provided to applicants during examination: **None**

Learning Objective: **CF-C, R38**

Question Source: **NEW**

Question History: Last NRC Exam _____

Question Cognitive bevel: **Memory or Fundamental Knowledge**
Comprehension or Analysis

TRAINING OBJECTIVES **continued**

29. **(Obj. R32)**Describe the relationship between the Condensate System and **'E'**Heater Drain System, including:

30. Point in the Condensate System that 'E' Heater drains are returned.

    30.1 Approximate amount 'E' Heater drain flow adds to Condensate System flow.

    35.2 When the 'E' Heater drains are fed forward to the Condensate System.

    30.3 Effect on overall plant operation of introducing 'E' Heaters drain flow back into the Condensate System.

31. **(Obj. R33)**Describe the relationship between the Condensate System and 'D' Heater Drain System, including:

    31.1 Point in the Condensate System that 'D' Heater drains are returned.

    31.2 Approximate amount 'D' Heaters drain flow adds to Condensate System flow.

    36.3 When the 'D' Heater drains are fed forward to the Condensate System.

    31.4 Effect on overall plant operation of introducing 'D' Heaters drain flow back into the Condensate System.

32. **(Obj. R34)**Compare the relative effects on plant operation between 'E' and 'D' Heaters drain **Wows.**

33. **(Obj. R35)**Explain the purpose for the 'C' Brain Coolers.

34. **(Obj. R36)**Explain the purpose for the "Condensate Cleanup to the UST" line and when this flow path would be used.

35. **(Obj. R37)**Describe the operation of C-128, Condensate Recirc Control. and C-124, Condensate Recirc to UST, including:

    35.1 Purpose for the recirc line.

    35.2 Logic between C-124 and C-128.

    35.3 Reason C-124 is before C-128 in recirc Bine and why the opening sequence is like it is (in Auto).

36. **(Obj. R38)Explain why a required level must be maintained in the UST's during power operation.**

37. **(Obj. R43)**List the systems that discharge to and the systems or components that are supplied from the Unit UST.

b) (Obj. R38) A minimum inventory of ≥ *30,000* gallons, (5.4 feet] is required to be maintained in each unit's UST since it is the initial supply for the EFDWPs on that unit. Therefore, QA level indication is supplied for each UST.

11. (Obj. R44) Interlocks

a) A problem was identified where, during a casualty situation in which the hotwell makeup valves fail open, the UST level could decrease below the 6' level rendering the EFDWPs inoperable until their suction could be aligned to the hotwell. Even worse, there was the possibility that the UST's could drain to the hotwell followed by an auto stark of the EFDWPs.

b) The UST level control system has been modified to prevent this situation from occurring.

c) Two new QA condition 1 pressure switches have been added to the UST's that will monitor UST level. These pressure switches are set to actuate at an UST level of between 7'-0" and 7'-3".

d) Three new QA condition 1 solenoid valves have been installed between the valve positioner (which generates the loader signal to the valve) and the diaphragms for C-192, C-187, and C-176.

1) When these solenoid valves are energized, they allow the hotwell level control system to operate normally.

2) When these solenoid valves are de-energized, the air is bled off of the valve diaphragms and the valve fail closed.

e) If UST level decreases to setpoint:

1) The pressure switches will de-energize the solenoid valves allowing the air to bleed off of the diaphragms causing the hotwell makeup valves to fail closed.

2) This is a one out of two logic so only one pressure switch needs to sense a low level to actuate and de-energize the solenoid valves.

3) Statalarm "UST TO HW MAKEUP VLVS FAIL CLOSED" (SA-6/D-10) will annunciate.

Note: OP/A/1106/02, Condensate and Feedwater, provides procedural guidance on recovering from this situation

f) When level in the UST increases above the setpoint for the pressure switches, normal hotwell level control will be restored.

g) The C-152/C-153 interlock has been previously described.

V. (Obj. R39, 42) Condensate Storage Tank

1 POINT

Question 41

Unit 3 plant conditions:

INITIAL CONDITIONS:
- Reactor power = 100%
- ICS in AUTOMATIC

CURRENT CONDITIONS:
- "3A" FDW pump trips

Which ONE of the following is correct?

ASSUME THE UNIT DOES NOT TRIP OR GO INTO TRACK

The unit will runback to _____ power at _____ per minute.

A. 55% / 20%

B. 55% / 25%

C. 65% / 20%

D. 65% / 25%

Question **41**
T2/G1

059A1.03, Main Feedwater (MFW) System
Ability to predict andlor monitor changes in parameters (to prevent exceeding design limits) associated with operating the MFW controls including: Power level restrictions for operation of MFW pumps and valves. (2.7*/2.9*)

Answer: D

A. Incorrect, both parts incorrect. First part would be correct for an asymmetric rod. Second part incorrect would be correct fer a "Loss of RC flow", "Both Gen Breakers Open" runback.

B. Incorrect, first part incorrect. Would be correct for an asymmetric rod. Second part is correct.

C. Incorrect, first part correct. Second part incorrect would be correct for a **"Loss** of RC flow", "Both Gen Breakers Open" runback.

D. Correct, the unit will runback to <u>65%</u> power at <u>25%</u> per minute.

Technical Reference(s):

Proposed references to be provided to applicants during examination: **None**

Learning Objective: **STG-ICS, R3**

Question Source: **NEW**

Question History: Last NRC Exam _____

Question Cognitive bevel: **Memory or Fundamental Knowledge**
Comprehension or Analysis

OBJECTIVES

TERMINAL OBJECTIVE

1. Summarize the operational aspects of the Integrated Control System (ICS) with respect to the coordination of plant systems and controls. (T1)

2. Predict automatic actions performed by the ICS and identify corrective actions upon failure of the automatic actions. (T2)

3. Summarize the purpose and operation of the ICS indications and controls available to the operator. (T3)

ENABLING OBJECTIVES

1. Define the functions of the Core Thermal power Demand (CTPD) subsystem. (R1)

2. Given a set of conditions, determine the method to achieve a load change using the Load Control Panel (LCP) (R2)

3. Identify the operations of automatic and manual load limits including: (R3)

   3.1 LCP indications

   3.2 Load Limit values

   3.3 Runback Rates

   3.4 Over-riding conditions

4. Given a load limit condition, assess plant runback response and determine the source of any failure. (R4)

5. Define the purpose and operation of the HOLD push-button. (R5)

6. Identify the operation of the TRACKING mode including: (R6)

   6.1 Initiating conditions

   6.2 Tracking Parameters

   6.3 Operator interface

7. Describe the ICS response to a load change in the Integrated mode. (R7)

8. Describe the conditions and responses of the Integrated Master in maintaining turbine header pressure control. (R8)

2) **Loss of one FDWPT = 65% power**

(a) i.e. If only one main feedwater pump were operating, the unit would be limited to producing 65% power.....therefore 65% is the load limit.

(b) Sensed by a low hydraulic oil on the FWPT.

3) **Asymmetric rod = 55% power**

(a) Sensed by a Diamond logic for asymmetric control rod from the Absolute Position Indication system.

4) **Loss** of **RC flow = Variable with Row degradation**

(a) Sensed by the total of the two median selected Loop RC flew signals.

5) **Maximum Runback (when selected) = 15% power**

6) Both **Generator breakers** OPEN **= 20% power**

(a) Sensed from breaker auxiliary relays in generator breakers.

7) **Reactor Trip = 0% power**

(a) Sensed from Trip Confirm on Diamond Panel or DSS

d) If a load limit is reached, the appropriate tight on the LCP panel will be illuminated indicating the source of the limit. Phis light will remain on until the CTP Demand is at or below the limit value.

- The "On High" light will also be on as long as the CTP Demand is above the limit value.

e) If more than one load limit exists, the MOST LIMITING (lower limit) will be selected by ICS. If that particular limit were satisfied or no longer true, the next most limiting load limit would control.

f) **Load limits can only be applied in the Integrated Mode (automatic) of operation.**

1) Manual operation will cause Tracking, which inputs a demand signal downstream of the load limit signal input and will therefore block any load limit.

g) When a load limit is imposed to the ICS, the operator cannot adjust the ICS via the LCP.

1) Target load can be set at a desired value and, by selecting a given rate, the time interval forthe unit to receive this change can be varied.

2. The rate at which ICS implements load changes is established by one of two means:

a) Manual

1) By using the RATE SET thumbwheel the operator can select a rate of change from 0.0 to 9.9 %.

2) The scale can be selected to "% / Min" or "% / Hr" via **pushbuttons** on the LCP.

3) Above 95% increasing or anytime below 20%, the CTPD will only allow a rate between 0 - 5% / min. maximum to be used.

4) When controlling at low power with the steam generators on Low Level Limits (LLL), the maximum rate of change is limited to 1%/min.

(a) The operator can select any rate below 1%/min to maneuver the unit when on LLL. This is necessary to allow the operator control over Tave changes at low power levels.

(b) However, any **automatic** rate input **will** override the 1%/min. if it is a higher value.

(c) LLL will be discussed in the FDW subsystem section of this lesson.

5) Manual rates are over-ridden by automatic rates.

(a) Exceptions:

(1) Operator can reduce below the 1%/min on LLL.

(2) Operator can increase above the 1%/min Asym CR.

b) Automatic

1) When an automatic load limit is received which requires a power reduction, the rate of change control is taken away from the operator. The rate imposed is a function of the limiting condition.

(a) CRD asymmetric rod 1% per min. (Minimum)

- The operator may increase this rate if desired

(b) Loss of RC flow 20% pes min.

(c) Both Gen. bkrs OPEN 20% per min.

(d) Unit in Track 20% per min.

(e) Maximum Runback 20% per min.

(9 Loss of RCP's 25% per min.

(g) Loss of FWP 25% per min.

(h) Reactor Trip 600% per min.

- If multiple rates are imposed, the ICS will honor the most limiting (fastest) condition.
- The #11 transfer function processor will select the appropriate automatic rate to be inserted to the ICS (T11).

2) Rate of change for CTP Demand due to Tracking, Maximum Runback, Loss of Rc Flow, or Gen Bkrs Open (i.e. Any 20% mnback rate) is variable from 20%/min. based on neutron error signal.

(a) The Reactor Control System is the slowest system that the ICS controls in terms of rate of change capability. Both FDW and Turbine are capable of much more rapid response than the reactor.

(b) Typically, large or rapid changes in CTPB wiil ultimately result in a large neutron error (error between NI flux and reactor demand). If this error exceeds 5%, a reactor crosslimit will occur. This is an indication that reactor response is lagging behind FDW and Turbine.

(c) As a result, when neutron error exceeds 2%, the rate of change will decrease to ultimately 10%/min. at 5% neutron error.

(1) This allows the reactor to track demand more closely.

D. Verifying Proper ICS Runbacks

1. It is important that the operator verify the unit is responding properly to load limiting conditions to prevent the unit from exceeding design limits of operation.

2. The following indications should be utilized to verify proper unit response.

a) Determine limiting condition by utilizing the LCP load limit lights, Statalarms, OAC, and equipment status.

b) Verify CTP Demand follows load limit.

1) The CTPD Set (lower) window should immediately indicate the value for the load limit.

- i.e. 65% for a FWPT trip

1 POINT

Question 42

Unit 1 plant conditions:

- 1A MD EFDW pump operating
- 1FDW-315 fails closed

Which ONE of the following is correct?

1A MD EFDW pump head is affected by _____ which diverts flow to the _____

A. an Automatic Recirculation valve / Condenser

B. an Automatic Recirculation valve / UST

C. a manual Recirc lineup with orifices / Condenser

D. a manual Recirc lineup with orifices / UST

Question 42

T2/G1

061K5.03, Auxiliary / Emergency Feedwater (AFW) System
Knowledge of the operational implications of the following concepts as the apply to the AFW: Pump head effects when control valve is shut (2.6/2.9*)

Answer: B

A. Incorrect, first part correct. Second part incorrect. Suction is swapped to the condenser on low UST level.

B. Correct, 1A MD EFDW pump head is affected by an Automatic Recirculation valve with *flow to* the Upper Surge Tank.

C. Incorrect, first part incorrect. Would be correct for the TDEFDWP. Second part incorrect. Suction is swapped to the condenser on low UST level.

D. Incorrect, first part incorrect. Would be correct for the TDEFBWP pump. Second part correct.

Technical Reference(s):

Proposed references to be provided to applicants during examination: **None**

Learning Objective: **CF-EFW, R7 and R11**

Question Source: **NEW**

Question History: Last NRC Exam _____

Question Cognitive Level: **Memory or Fundamental Knowledge**
Comprehension or Analysis

TRAINING OBJECTIVES

TERMINAL OBJECTIVE

1. After this lecture, the student will have an understanding of the components, indications, controls and operation of the EFDW System. He/she will be able to relate the operation of the EFDW System to the safe operation of the plant and its impact on accident mitigation. Along with this, the student will be aware of the conditions that could possibly lead to rendering the EFBW System inoperable and what actions to take to mitigate the consequences of these situations. Identify and be able to discuss an understanding of the other systems that integrate with the EFDW System, such as, ICS, AFIS, FDW, Main Steam, Auxiliary Steam, Condensate, IA, AIA and Electrical Power. (TI)

ENABLING OBJECTIVES

1. State the purpose of the EFDW System. (R1)
2. List the cooling medium for the MBEFDWP motors. (86)
3. List the power supplies for the MDEFDWPs. (R5)
4. Describe the operation of the cooling water system for the MDEFDWP motors, including the failure mode on loss of power. (R26)
5. Describe the normal discharge flow paths for the EFDW System, include major pumps and valves. (R2)
6. Describe the alternate ICS flowpath to the SGs, using the MDEFWPs, and the TDEFDWP. (845)
7. Draw a one-line diagram of the EFDW System that indicates the normal suction and discharge flow paths (R57)
8. List the normal and alternate suction supplies to the TDEFDWP and the MDEFDWPs and describe what conditions must exist to be able to use the alternate source. (R4)
9. **Describe the minimum recirculation flow paths for the MDEFDWPs, including the function of the ARC valve, with possible failure modes and potential mitigating actions. (R7)**
10. List the normal and backup coding medium for the TDEFDWP bearing cooling jacket. (R8)

11. Describe how cooling water is established to the BDEFDWP bearing cooling jacket when the pump is started. (RIQ)

12. Describe the minimum recirculation flow path for the TDEFDWP, including the approximate flow rate. (R1 I)

13. List the sources of steam forthe TDEFDWP. (R12)

14. Describe the purpose for the Steam Admission Valve (MS-93), including a description of its operation following a normal start of the TDEFDWP. (R24)

15. Describe how to manually open valve MS-93, following a failure to open after a TDEFBWP pump start signal. (R43)

16. Explain the function of the Auxiliary Oil Pump in relationship with the operation of the Primary Relay and Operating Valve (MS-95) associated with the TDEFBWP. (R13)

17: Explain how to use the Hand-Start lever of the Primary Relay to start the BDEFDWP in the event that the Auxiliary Oil Pump does not start when MS-93 opens. (R44)

18. List the two functions of TDEFDWP Stop Valve (MS-94), including a description of manual operation of the valve. (R14)

19. Describe how to reset the MS-94 and what to look foe to verify that it is reset. (R15)

    43.1 Describe how to verify a positive latch on the Reset Mechanism.

20. Explain the purpose foe and operation of the Overspeed Governor and Emergency Relay associated with the TDEFDWP. (R16)

21. Describe how control oil and lube oil are supplied to the TDEFDWP during startup and operation. (R17)

22. List the normal and backup cooling medium for the TDEFDWP oil cooler. (R18)

23. Explain how the EFDW Systems can be moss-connected between units. (R19)

24. Describe the MANUAL and AUTOMATIC (including AUTO 1 & AUTO 2) control available for the MDEFDWPs and their purposes. (R20)

25. Describe or make a sketch of the logic/conditions that will AUTO START the MDEFDWPs when the respective control switches are in AUTO, including a description of AMSAC and DRY OUT PROTECTION (R22)

26. Describe the purpose for AMSAC/DSS, including actuating setpoints and functions they provide following actuation. (R61)

3. "B" MDEFDWP discharges through FDW-382 (MDEFDWP "B" discharge to "B" EFDW Header) to "B" SG through FDW-316 (SG "B" EFDW control valve) to "B" SG. Pes DBD, if FBW-382 is closed, "B" inoperable.
4. FDW-382 functions on the "B" train the same as FDW-372 functions on the "A" brain.
5. (OBJ. R45) On a failure of FDW-315/FDW-316 to control SG levels properly, the MDEFDWPs can be aligned to feed the SG through the Integrated Control System (ICS) Startup (SU) control valves by procedure (Rule 3 and End. 5.27 of EOP)
   a) Flow will be through FDW-374 (MDEFDWP "A" discharge to SG "A" Normal- Emergency Header) and FDW-384 (MDEFDWP "B" discharge to SG "B" Normal-Emergency Header) to the Startup Feedwater Control Valves to the SGs.
   - Per DBD, if either FDW-374 or 384 is not closed, the associated MDEFDWP is inoperable.
   - Design Engineering is concerned that FDW-372, 382, 374, and 384 may not operate against a high dP, therefore MDEFDWPs should be stopped prior to operating the valves.

D. (OBJ. R7) Recirculation Flowpath

4. The MDEFDWPs have approximately *300* gpm (per pump) recirculation flow to the UST for pump and discharge piping protection. When a MDEFDWP is started, the ARC (Automatic Recirculation Control) valve automatically provides recirculation flow.

NOTE: An event has occurred at another plant concerning this same type ARC valves. The valves failed open due to internal valve failure. Qne of €heproblems that came from this failure was the operators were not able to determine from their flow indications that these valves had failed. Some examples of what the Oconee operator might see if these MDEFDWP recirculation valves failed open follows:

- The initial assumption is that the TDEFDWP is not running. If SG pressures were at about 1000 psig and the A MBEFDWP recirculation valve failed open, there would be a mismatch between the indicated flows to each SG. This indicated flow mismatch could be as much as 300 gpm if FDW-315 & 316 were full open. The operator would see the flow mismatch and depending on decay heat could see a lower SG level on the side with the failed valve. There would not be a pump runout concern unless SG pressures were 800 psig or less and FDW-315 & 316 were full open.
- If the TDEFDWP were running, the operator would NOT see a flow mismatch on Total EFDW Flow indications but would see it on the MDEFDWP Discharge Flow gages.

2. If FDW-315/FDW-316 fails to control SG levels properly, the BBEFDWP can be aligned to deed the SGs through the Startup Feedwater Control Valves by procedure.

   a) Flow will be through normally locked closed valves FDW-94 (TDEFDWP discharge to SG A" Normal-Emergency Header) and FDW-96 (TDEFDWP discharge to SG "B" Normal-Emergency Header) to the Startup Feedwater Control Valves to the SGs.

   b) FDW-94 & FDW-96 should <u>not</u> be opened until downstream feedwater valves have been repositioned. This is to preclude their having to operate against EFDW pump shutoff head.

H. Recirculation Flowpath

1. (OBJ. R11) > 150 gpm continuous recirculation flow to the UST; limited by recirculation orifices; local flow indication only.

2. The TDEFBWP is also provided with a test line to the UST. Phis line is used for performance testing and for running the TDEFDWP in recirculation for training.

I. (QBJ. R12) Steam Supplies (Figure OC-CF-EF-2)

1. Steam is supplied from Main Steam or Auxiliary Steam.

   - Main steam via MS-82 & 84 controlled by MS-87.
   - MS-82 & 84 come from "A" & "B" main steam lines and are controlled from the unit Control Room.

2. MS-87 is operated by a MOORE controller to maintain a steam pressure setpoint of 310 psig.

   - The controller has a battery backup that will prevent MS-87 from failing open on loss of power to the controller. This is designed to last foe approx. 2 hours.
   - An alarm on SA-12 will alert the operator of such a loss of power and instruct the operator to isolate the MS supply to preclude MS-87 failure overpressurizing the line.
   - MS-87 controller is located near the valve and is programmed with no manual function.

3. MS-89 (Turbine Driven Steam Supply Block) This manual valve requires 104 turns to completely open and this valve also contains a pilot valve and a main valve. Refer to PIP 98-0444 for information on mis-operation of this valve during TDEFWP testing.

4. Auxiliary steam is supplied through block valve AS-38 which comes from the AS header.

   - The AS header is controlled at 300 pslg by regulating valves MS-126 & 129.
   - The TDEFDWP exhausts to atmosphere.

1 POINT

Question 43

Plant conditions:

TIME = 0800:00
- ACB-2 (KHU Unit 1 EMER FDR) = closed
- ACB-3 (KHU Unit 2 EMER FDR) = closed

TIME = 0800:05
- ALL 4260 volt switchgear (1TC, 1TD, 1TE) is deenergized

TIME = 0800:45 - Present Time

Which ONE of the following describes how the Keowee units' auxiliary power supplies (power to 1X and 2X switchgears) were affected?

Assume the auxiliary switchgears were initially in a normal power alignment.

Switchgear _____ lost power and _____

REFER TO ATTACHMENT

A. 2X / then regained power.

B. 1X / then regained power.

C. 2X / will NOT have regained power automatically.

D. 1X / will NOT have regained power automatically.

Question 43
T2/G1

062K3.02, AC Electrical Distribution System
Knowledge of the effect that a loss or malfunction of the ac distribution system will have on the following: ED/G (4.1/4.4)

Answer: B

A. Incorrect, 2X switchgear is being fed from the overhead via the running KHU.

B. Correct, 1X was being supplied power from CX via 1TC and will initially lose power. After 36 seconds, power will automatically swap to the 1X transformer.

C. Incorrect, first part incorrect. 2X switchgear is being fed from the overhead via the running KHU. Second part correct. After 36 seconds, power will automatically swap to the 1X transformer.

D. Incorrect, both parts incorrect. Would be correct if the other unit was tied to the underground feeder.

Technical Reference(s):

Proposed references to be provided to applicants during examination: **None**

Learning Objective: **EL-KHG, R13**

Question Source: **Bank # EL041301**

Question History: Last NRC Exam _____

Question Cognitive Level: Memory or Fundamental Knowledge
Comprehension or Analysis

Keowee Hydro Station - Emergency Start

Enclosure 6.3

KHS One-Line Diagram

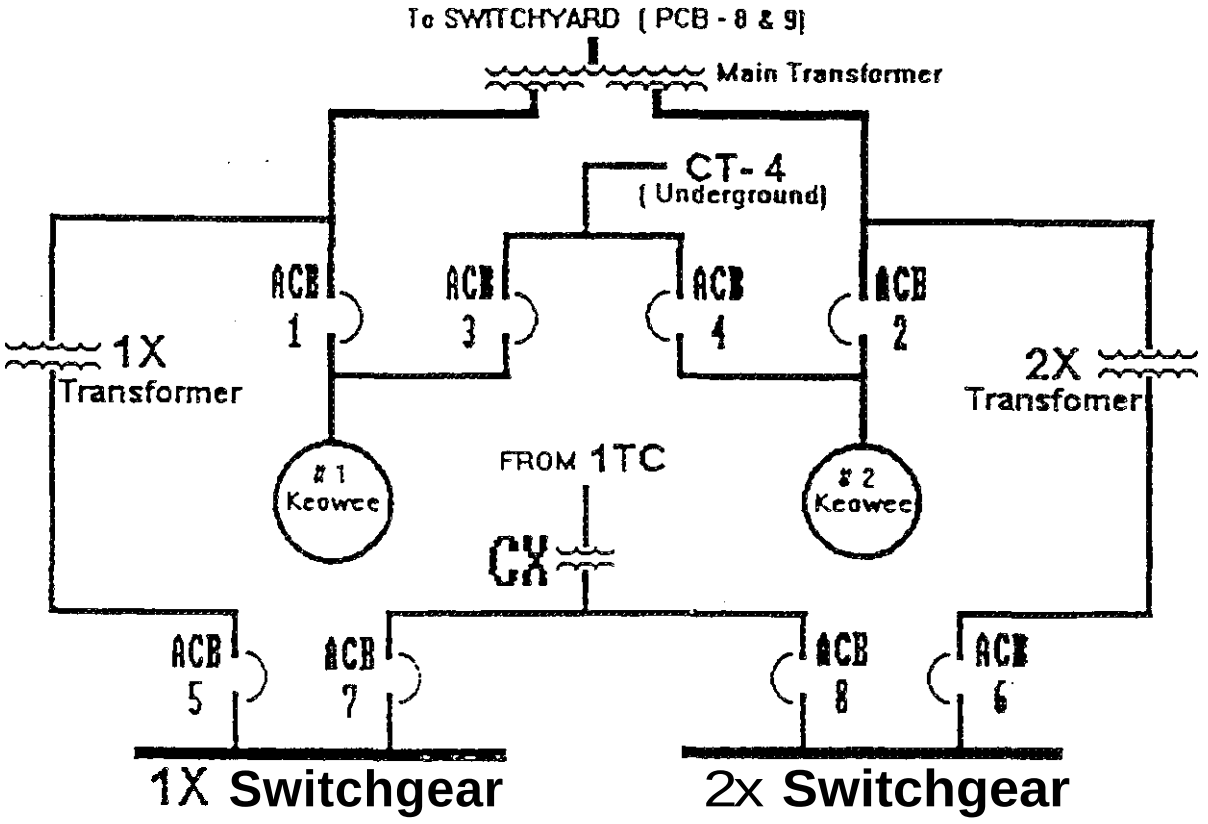

12.3 Determine actions required following an ELO or NLO. (R21)

13. Given a copy of OP/0/A/1106/19, Keowee Hydro at Oconee, verify the proper sequence of actions have occurred for: (R4)

    13.1 an automatic start of a Keowee Hydro unit.

    13.2 a manual start of a Keowee Hydro unit.

    13.3 a manual shutdown for a Keowee Hydro unit.

    13.4 an Emergency Start of a Keowee Hydro unit.

14. State the locations of the manual emergency start controls. (R6)

15. List all signals that will initiate an emergency start of a Meowee Hydro unit. (R5)

16. Given a set of conditions, verify proper sequence of actions have occurred for an Emergency Start of the Keowee Hydro Units. (R18)

17. Given a copy of AP/O/A/2000/002, KHS Emergency Start, discuss the reason for the performance of specific steps. (R14)

18. Explain the basis for the critical action steps of the following NLO JPMs associated with the KHG: (R25)

    18.1 NLO-045, Restore power to the 600 volt switchgear 1X

19. Describe how various degraded conditions of this component could affect continued safe plant operation and the impact on accident mitigation, if any. (R16)

20. Draw and explain the Electrical Distribution System of the Keowee Hydro Station dawn to the 600V load centers. (R13)

21. Given a set of conditions, diagnose the status of the KHS 600V power supply system. (R22)

22. Evaluate the consequences of granting permission to the KHS operator to perform AP/2000/003. (R29)

23. Given a copy of ITS/SLC's and associated Bases, analyze a given set of plant conditions for applicable ITS/SLC LCO's. (R26)

24. Apply all ITS/SLC rules to determine applicable Conditions and Required Actions for a given set of plant conditions. (R27)

25. Compute the maximum Completion Time allowed for all applicable Required Actions to ensure compliance with ITS/SLC's. (R28)

7. Note that planned outages of Keowee Units are not allowed if any Oconee unit is in cold shutdown with fuel in the core and RCS levels < 50" on LT-5. This is a requirement of the Shutdown Protection Plan. This requirement may be wavered by the PQRC committee.

2.6 Power Supplies

A. Normal Power (See Figure OC-EL-KHG-20)

1. Unit Aligned to the Overhead

a) From 230 KV Switchyard backcharging through Keowee main transformer

b) To transformer 1X/2X through breaker 5/6 to 600 V Auxiliary Load Centers 1X/2X

c) If the Keowee Unit is running power comes from output of Keowee Unit through transformer 1X/2X to breaker 5/6 to 600 V Aux. LC 4X/2X.

2. Unit Tied to the Underground

a) Auxiliary power is supplied to the 600V Aux. LC through CX transformer through ACB7/8.

B. Emergency Power

1. With the AUTO/MANUAL Transfer switch associated with ACBs 5 & 716 & 8 in AUTO, the auxiliary switchgears are in a normal power alignment. The Normal Power alignment being determined by the position of the Underground breaker. If the underground breaker is CLOSED, then the Normal power is from CX transformer. If the underground breaker is OPEN, then the Normal power is from the units respective 600V transformer (either 1X or 2X). During a loss of power to a unit's 600V switchgear, a 6 second timer starts. If power is restored to the Normal source within this 6 seconds, the timer resets and no breaker action occurs. When the 6 second timer times out, the Normal power supply breaker OPENS and a 30 second timer starts. If power *comes* back to the Normal source during this 30 seconds, then the normal breaker will CLOSE back in. If the 30 second timer times out, and there is power available on the Alternate source, then the alternate breaker will close in. This breaker stays closed until manually opened, unless this Alternate source loses power and the Normal source has regained power. If this occurs, the alternate breaker opens after a six (6) second timer times out. If this occurs and there is power available on the Normal source, then the normal breaker closes in immediately. If all of these actions have occurred and the unit is back on its Normal power source, then the timers are all reset and the transfer scheme is ready to begin again.

2. With the transfer switch in MAN, no automatic transfers will occur. If power is lost to either units 600V Auxiliary LC, manual action must be taken by the operator to restore power per AP/0/A/2000/002, Keowee Hydro Station - Emergency Start.
3. If power is not restored to the 600V switchgears 1X &/or 2X, then two independent sets of batteries will supply control power to operate the units. Operation in this mode is limited to ≈ 1 hour.

C. AP/2000/003, Auxiliary Power Recovery

1. This AP is run by the KHS operators during a loss of power event in which the OH path is OOS, the UG path is available, and there is no in-house power available to KHS from CX transformer.
2. AP/2000/002, Emergency Start will direct the KHS operator to ask the Unit 2 SRO for permission to run AP/2000/003. When the Unit 2 SRO gives permission to perform AP/2000/003, he is acknowledging that:
   a) ONS cannot supply power to KHS from 1TC switchgear breaker 4
   b) The OH powerpath is not going to be availabie to use
   c) if there is only one operable KHU, it is acceptable to use that unit to supply power to ONS and KHS.

2.7 Technical Specifications

A. Tech. Spec. 3.8 - Electrical Power Systems

B. UFSAR Chapter 16, Selected Licensee Commitments

1. SLC 16.8.4, Keowee Operational Restrictions.
   a) This SLC limits the commercial operation of the units based upon the total head available to an operating KHU.
   b) Operating within the boundaries of these curves ensures the unit will not Emergency Lockout on an overspeed conditions following an Emergency Start signal received during commercia! operations.
   c) The horizontal axis on this curve is an OPERATING tailrace Bevel. The Keowee operator takes this AFTER the unit has started and the tailrace level has increased.
   d) The vertical axis is the Lake Keowee level. Lake Keowee level readings are required to obtain the net operating head available to an operating KHU. The net operating head (the difference between the forebay and the tailrace) operability limit is 132 feet. Any values above this are acceptable.
   e) Normally the Keowee Lake level (forebay) is taken by the Keowee Operator at the KHS. The OPERATING tailrace level is manually taken in the same manner as the forebay.

Keowee Hydro Station -

Emergency Start

Enclosure 6.3

KHS One-Line Diagram

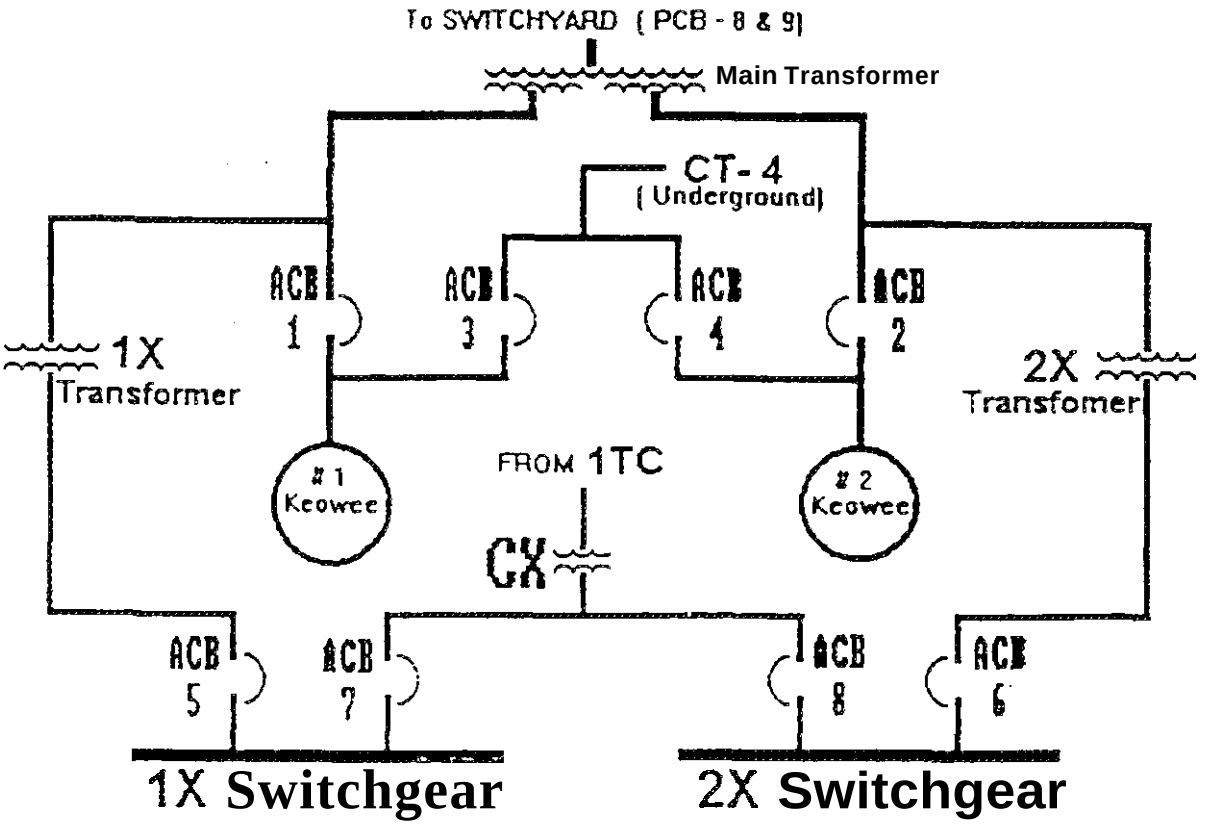

Question 101 EL042304 EL041301

Plant conditions:

TIME = 0800:00

- ACB-2 = closed
- ACB-3 = closed

TIME = 0800:05

- ALL 4460 volt load centers (ITC, 1TD, 1TE) are deenergimed

TIME = 0800:45 - Present Time

Which ONE of the following describes how the Keowee units' auxiliary power supplies (power to 1X end 2X switchgears) were affected? (.25)

(Assume the auxiliary **switchgears were initially** in a normal **power** alignment.)

Switchgear _____ lost power and _____

A. 2X then regained power.

5. 1X then regained power.

C. 2X / will NOT have regained power automatically.

D. 1X will NOT have regained power automatically.

Answer 101
B
A. Incorrect - 2X switchgear is being feed from the overhead via the running KHU.
B. Correct - 1X was'being supplied power from CX via 1TC. After 36 seconds, power will automatically swap to the 1X transformer.
C. Incorrect - See A.
D. Incorrect - See **5.**

3. Concerning 230 kV PCB operation: (R-3)

   3.1 State the purpose of the Hydraulic Operating Mechanism.

   3.2 State the purpose of the SF6 Puffer Intempter.

   3.3 Describe what effect low hydraulic system pressure (3400 psig) will have on PCB operation.

   3.4 Describe what automatic action associated with PCB operation will occur if hydraulic pressure decreases to approximately 3100 psig.

   3.5 Describe what automatic action associated with PCB operation wili occur if SF6 gas pressure decreases to approximately 103 psig.

4. Describe basically hew to manually close and how to manually trip a PCB from the associated Control Room Switch (other than the Main Generator output breakers). (R-4)

5. Concerning **6900V** and **4160V** Breaker operation **(R-5)**

   5.1 Explain how to differentiate between the "racked out", "test", and "racked in" positions.

      A. State the status of key operational contacts (primary connection & secondary connection) with the breaker in both connected and test positions.

   5.2 Describe the electrical (remote & local) operation of a **4160V** or **6900V** circuit breaker.

   5.3 Describe the manual (local) operation of a **4160V** circuit breaker.

   5.4 Describe the basic steps that **must** be taken to "rack out" & "rack in" a typical **4160V** or **6900V** circuit breaker.

2.4 (OBJ. R5) 6900V, and 4160V Breakers

Refer to Handouts [TYPICAL 4160/6900 V BREAKER POSITION OP-OC-CB-3.2.F-1 TYPICAL 4160/6900 V BREAKER PROTECTIVE RELAYING, OP-OC-CB-3.2.G-1 4160/6900 V CONTROL COMPARTMENT, OP-OC-CB-3.2.G-2 FUSE BLOCK]

A. (OBJ. R5) Breaker Cubicle Positions

1. The 6900V and 4160V Breakers are located in metal cabinets with each breaker contained within its separate cubicle. Each of these breakers is RACKED into one of the following three cubicle positions:

a) DISCONNECT the breaker is separated from the primary power supply, load, and control power supply. This isolates the breaker from the bus, load, and control power. In addition, a shutter closes to provide a barrier between the bus and breaker.

b) In TEST the primary connection (power source to load) is disconnected. The secondary connection (control power) is connected.

With the secondary connection connected and the Control power
Fuses installed, operation of the breaker without energizing or de-energizing the load can occur.

Operation of the breaker can occur by:

- Remote electrical operation (examples Control Room and Auto actuation)
- Local electrical operation (pistol grip on the breakers Cubicle and local control panel near the switchgear)

NOTE: This is the only time the pistol grip on the local Local cubicle will operate the 13.8 KV, 6900V and 4160V Breakers.

- All auxiliary contact will operate when the breaker is Operated in the TEST or CONNECT position. In addition, a shutter closes to provide a barrier between the bus and breaker.

c) CONNECT the primary and secondary connections are connected to the power bus. Operation of the breaker will energize or de-energize the loads.

1 POINT

Question 44

Which ONE of the following describes the status of a 4160 V breaker with the Control Power fuses installed and the Breaker in the TEST position?

The Primary connection of the breaker is…

A. connected to the bus and control power is available to operate the breaker.

B. connected to the bus and operation of the breaker is locally only.

C. disconnected from the bus and the breaker can be either locally or remotely operated.

D. disconnected from the bus and the breaker can be operated only locally.

Question 44

T2/G1

063A4.01, D.C Electrical Distribution

Ability to manually operate andlor monitor in the control room: Major breakers and control power fuses (2.8*/3.1)

Answer: C

A. Incorrect- the stabs of the breaker are not connected to the bus.

B. Incorrect- the stabs of the breaker are not connected to the bus and the breaker can be operated remotely.

C. Correct- the stabs of the breaker are disconnected from the bus and the breaker can be remotely or locally operated.

D. Incorrect- The stabs are disconnected, however the breaker can be remotely operated also.

Technical Reference(s):

Proposed references to be provided to applicants during examination: **None**

Learning Objective: **EL-CB, R5**

Question Source: **EL010501**

Question History: Last NRC Exam _____

Question Cognitive Level: **Memory or Fundamental Knowledge**
Comprehension or Analysis

3. Concerning 230 kV PCB operation: (R-3)

   3.1 State the purpose of the Hydraulic Operating Mechanism.

   3.2 State the purpose of the SF6 Puffer Intempter.

   3.3 Describe what effect low hydraulic system pressure (3400 psig) will have on PCB operation.

   3.4 Describe what automatic action associated with PCB operation will occur if hydraulic pressure decreases to approximately 3100 psig.

   3.5 Describe what automatic action associated with PCB operation will occur if SF6 gas pressure decreases to approximately 103 psig.

4. Describe basically how to manually dose and how to manually trip a PCB from the associated Control Room Switch (other than the Main Generator output breakers). (R-4)

5. Concerning 6900V and 4160V Breaker operation (R-5)

   5.1 Explain how to differentiate between the "racked out", "test", and "racked in" positions.

      A. State the status of key operational contacts (primary connection & secondary connection) with the breaker in both connected and test positions.

   5.2 Describe the electrical (remote & local) operation of a 4160V or 6900V circuit breaker.

   5.3 Describe the manual (local) operation of a 4160V circuit breaker.

   5.4 Describe the basic steps that must be taken to "rack out" & "rack in" a typical 4160V or 6900V circuit breaker.

2.4 (**OBJ. R5**) 6900V, and 4160V Breakers

Refer to Handouts [TYPICAL 4160/6900 V BREAKER POSITION OP-OC-CB-3.2.F-1 TYPICAL 4160/6900 V BREAKER PROTECTIVE RELAYING, OP-OC-CB-3.2.G-1 4160/6900 V CONTROL COMPARTMENT, OP-OC-CB-3.2.G-2 FUSE BLOCK]

A. (**OBJ. R5**) Breaker Cubicle Positions

1. The 6900V and 4160V Breakers are located in metal cabinets with each breaker contained within its separate cubicle. Each of these breakers is RACKED into one of the foliowing three cubicle positions:

   a) DISCONNECT the breaker is separated **from** the primary power supply, load, and control power supply. This isolates the breaker from the bus, load, and control power. In addition, a shutter doses to provide a barrier between the bus and breaker.

   b) In TEST the primary connection (power source to load) is disconnected. The secondary connection (control power) **is** connected.

   With the secondary connection connected and the Control power
   Fuses installed, operation of the breaker without energizing or de-energizing the load can occur.

   operation of the **brea**ker can occur **by:**

   - Remote electrical operation (examples Control **Room and Auto actuation)**
   - **Local electrical ope**ration (pistol grip on the **breakers** Cubicle and local control panel near the switchgear)

   NOTE: This is the only time the pistol grip on **the local Local cubicle will ope**rate the 13.8 **KV, 6900V** and **4160V Breakers.**

   - All auxiliary contact will operate when the breaker **is Operated in the TEST** or CONNECT position. In **addition, a shutter closes to** provide a barrier between the **bus and breaker.**

   c) CONNECT the primary and secondary connections are connected to the power bus. Operation of the breaker will energize or de-energize the toads.

1 POINT

Question 45

Unit 1 plant conditions:

INITIAL CONDITIONS:
- Reactor power = 100%
- ACB-4 (KHU Unit **2** EMER FDR) closed

CURRENT CONDITIONS:
- Switchyard Isolation occurred
- Keowee Unit **1** Emergency Lockout

Which ONE of the following is correct?

Load Shed _____ occur _____

A. will / to prevent overloading the Standby **Buss.**

B. will / to prevent overloading CT-4 Transformer.

C. will not / and power is restored via CT-1 and a Keowee Unit.

D. will not / and power is restored via CT-1 and the 230 Kv Switchyard.

Question **45**
T2/G1

06483.07, Emergency Diesel Generators (ED/G)
Ability to monitor automatic operation of the ED/G system, including: Load seauencina (3.6*/3.7*)

Answer: B

A. Incorrect, Load Shed protects overloading CT-4 NOT Standby Buss.

B. Correct, Load Shed protects overloading CT-4.

C. Incorrect, Load Shed will occur. The other Keowee unit would have to be tied to the UG. Would be true if ACB-3 were closed.

D. Incorrect, Load Shed wilt *occur.* If the Unit had tripped without a Switchyard Isolation then this answer would be correct.

Technical Reference(s):

Proposed references to be provided to applicants during examination: **None**

Learning Objective: **EL-PSL, R5**

Question Source: **Bank # EL050503**

Question History: Last NRC Exam _____

Question Cognitive Level: Memory or Fundamental Knowledge
Comprehension or Analysis

OBJECTIVES

Terminal Objective

1. Discuss the **EPSL,** including the various power supplies and how each power source can be aligned to supply power to ONS Units MFB during Design Bases Events. (T1)

2. For a given set of plant conditions evaluate the status of the MFB power sources including automatic system actions, time frames for reenergizing the MFB, and what contingency actions are required if automatic actions do not occur. (T2)

Enabling Objectives

1. Concerning the Design Bases for the 4KV Essential Auxiliary Power System, describe the following: (R1)

   1.1 The System Functional Design Bases

   1.2 The Design Bases Events

2. Concerning a Keowee Emergency Start, describe the following: (R2)

   2.1 Purpose

   2.2 Panel location

   2.3 Emergency Start signals

3. Describe the following for the Load Shed Logic:

   3.1 Purpose (R3)

   3.2 Panel location (R4)

   3.3 The conditions, which will initiate a load-shed signal and the logic, involved including consequences of inoperability of both load-shed signals. (R5)

   3.4 Loads which will be load shed (R6)

   3.5 How to reset a load shed signal (in the Cable Room) (R7)

   3.6 How to reset a load shed signal (R8)

   3.7 The location of the fuses for load shed in the 4160V switchgear (R9)

   3.8 How to verify power is available to the load shed trip relays (R10)

Question 118 EL050503 EL050503

Unit 1 plant conditions:

INITIAL CONDITIONS:

- Reactor power at 100%
- ACB-4 (KHU Unit 2 EMER FDR) closed

CURRENT CONDITIONS:

- Switchyard Isolation occurred
- Keowee Unit 1 Emergency Lockout

Which ONE of the following is correct? (.25)

Load Shed _____ occur _____

A. will / to prevent overloading the Standby Buss.

B. will / to prevent overloading CT-4 Transformer.

C. will not / and power is restored via CT-1 and a Keowee Unit.

D. will not / and power is restored via CT-1 and the 230 Kv Switchyard.

Answer 118
B

A Incorrect - Load Shed protects overloading CT-4 NOT Standby Buss.

B Correct - Load Shed protects overloading CT-4.

C Incorrect - Load Shed will occur. The other Keowee unit would have to be tied to the UG.

D Incorrect - Load Shed will occur. If the Unit had tripped without a Switchyard Isolation then this answer would be correct.

1 POINT

Question 46

Which ONE *of* **the** following RIAs being removed from service would require Technical Specifications or Selected Licensee Commitments entry?

A. **RIA-4** (Reactor Building Hatch)

B. RIA-I7 ("B" Main Steam bine)

C. RIA-32 (Low Pressure Service Water)

D. RIA-45 (Unit Vent-Noble Gas)

Question 46
T2/G1

073GG2.1.33, Process Radiation Monitoring (PRM) System
Ability to recognize indications for system operating parameters which are entry-level conditions for technical specifications. (3.4/4.0)

Answer: D

A. incorrect, RIA-4 (Reactor Building Hatch) is not required by Technical Specifications or Selected Licensee Commitments.

B. Incorrect, RIA-17 ("B" Main Steam Line) is not required by Technical Specifications or Selected Licensee Commitments.

C. Incorrect, RIA-31 (Low Pressure Service Water) is not required by Technical Specifications or Selected Licensee Commitments. RIA-35 *is* required by TS 16.11.3 (Radioactive Effluent Monitoring Instrumentation).

D. Correct, RIA-45 (Unit Vent-Noble Gas) is required by TS 16.11.3 (Radioactive Effluent Monitoring Instrumentation).

Technical Reference(s): **TS 16.11.3 (Radioactive Effluent Monitoring Instrumentation)**

Proposed references to be provided to applicants during examination: **None**

Learning Objective: **RAD-RIA, R9**

Question Source: **MEW**

Question History: Last NRC Exam _____

Question Cognitive bevel: **Memory or Fundamental Knowledge**
Comprehension or Analysis

14. Without the use of reference, when AP/1700/018, (Abnormal Release of Radioactivity), is required to be utilized by the operator be able to demonstrate the following: (R16)
    - State the Entry Conditions and Immediate Manual Actions in the AP.
    - Explain the basis for limits, **cautions,** notes and major steps in the AP
    - Based on plant data received, summarize proper operator actions and strategies required in the AP to mitigate the abnormal plant condition.
    - Utilizing available operator controls and instrumentation both inside and outside the control room interpret the indications and take proper actions per the AP that should mitigate the abnormal condition.
    - Provide proper directions to operators and supporting groups performing actions of the AQ outside the control room

15. Evaluate an inoperable monitor to determine *if* any required actions are necessary per TS & SLC. (R9)

16. Utilize Area and Process Radiation Monitor indications to analyze plant conditions and determine the proper course of action required to prevent the potential inadvertent release of radioactive effluent to the environment. (R15)

1 POINT

Question *47*

Unit 3 plant conditions:

INITIAL CONDITIONS:
- MODE5
- 3C LPI pump operating
- 3A LPSW pump is tagged out for bearing replacement

CURRENT CONDITIONS:
- 3B LPSW pump low discharge pressure light illuminates
- Statalarm 3SA-09/A-9 (LPSW Header A/B Pressure Low) actuates

Which ON€ of the following is correct?

A. AP/26, **Loss** of Decay Heat Removal should be used to mitigate the event by cross-connecting Unit 1&2 LPSW system with Unit 3 and starting an additional Unit 1&2 LPSW Pump.

B. AP/26, Loss of Decay Heat Removal should be used to mitigate the event by cross-connecting the LPSW system and the **HPSW** system.

C. AP/24, Loss of LPSW should be used to mitigate the event by cross-connecting Unit 1&2 LPSW system with Unit 3 and starting an additional Unit 1&2 LPSW Pump.

D. AP/24, Loss of LPSW should be used to mitigate the event by cross-connecting the LPSW system and the HPSW system.

Question 47
T2/G1

076A2.02, Service Water System (SWS)
Ability to (a) predict the impacts of the following malfunctions or operations on the SWS; and (b) based on those predictions, use procedures to correct, control, or mitigate the consequences of those malfunctions or operations: Service water header pressure (2.7/3.1)

Answer: C

A. Incorrect-first part incorrect. AP/26 mitigates the loss of DHR and will not provide actions to restore LPSW. AP/24 must be used to restore LPSW. Second part is correct but the guidance in located AP/24.

B. Incorrect - first part incorrect. AP/26 mitigates the loss of DHR and will not provide actions to restore LPSW, AP/24 must be used to restore LPSW. Second part incorrect. HPSW is no longer used to backup LPSW.

C. Correct – AP/24 contains the correct guidance. Cross connecting LPSW and starting an additional U1&2 LPSW Pump is the correct mitigation action

D. incorrect – first part correct. Second part incorrect. HPSW is no longer used to backup LPSW.

Technical Reference(s):

Proposed references to be provided to applicants during examination: None

Learning Objective: SSS-LPSW, R8

Question Source: Bank # SSS050801

Question History: Last NRC Exam _____

Question Cognitive Level: Memory or Fundamental Knowledge
comprehension or Analysis

11. Concerning Engineered Safeguards operation of the LPSW system: (R14)

    11.1 State the Engineered Safeguards signals that affect the LPSW system.

    11.2 Describe how each Engineered Safeguards signal affects operation of the LPSW system.

12. Given a copy of TS/SLCs and associated Bases, analyze a given set of plant conditions for applicable TS/SLC LCOs. (R18)

13. Apply all TS/SLC rules to determine applicable Conditions and Required Actions for a given set of plant conditions. (R19)

14. Compute the maximum Completion Time allowed for all applicable Required Actions to ensure compliance with TS/SLCs. (R20)

15. Concerning abnormal operation of the LPSW system:

    15.1 Describe the method used to supply LPSW in the event LPSW flow is lost on Unit 1&2 or Unit 3. (R15)

    15.2 Describe how degraded conditions of the LPSW system could impact accident mitigation. (R16)

    15.3 Describe how degraded conditions of the LPSW system could result from HPSW pump configuration. (R17)

16. Given a completed copy of PT/*/A/0251/001, Low Pressure Service Water Pump Test, evaluate the data and compare to acceptance criteria to determine component operability. (R21)

17. Given a completed copy of PT/*/A/0251/022, LPSW-251 and 252 Travel Stop Verification, evaluate the data and compare to acceptance criteria to determine component operability. (R22)

8. Inoperable fire hose stations in containment.
9. No filtered water makeup capability
10. No SSW flow. HPSW also supplies SSW

B. AP/*/A/1700/24, Loss of LPSW (Refer to EAP-APG lesson plan)

1. All LPSW pumps lost on Units 1 & 2 or Unit 3:

a) If a LPSW pump is cavitating the procedure has the operator DISABLE the auto start circuit prior to stopping the cavitating pump.

NOTE: The ENABLE/DISABLE switch will is located in the control room in the vicinity of the LPSW pump control switches.

b) Open unit cross-connects, LPSW-67 and LPSW-68 (enclosure 5.1).

c) Start available LPSW pumps as required.

C. AP/A/1700/11, Loss of Power

1. It is desirable to regain forced CCW to increase LPSW pump NPSH.
2. if CCW forced flow has not been restored and the forebay elevation is > 91 ft, the CCW side of the Condensate Coders is unisolated to ensure adequate suction to the LPSW pumps.

D. AP/A/1700/13, Dam Failure

1. One CCW pump is left in operation if the Intake Canal is left intact.
2. All RCPs are tripped to reduce heat input to the RCS and to prevent RC pump damage from inadequate LPSW Blow.
3. CCW forced flow is established by one unit to supply all three units' condensers and LPSW pump suction. Flow from any one of the twelve CCW pumps is split between the units and then balanced through the condensers so that each unit's TBVs can operate (> 7" condenser vacuum).
4. All HPSW Pumps are tripped.
5. All LPSW pumps on the affected unit are stopped after disabling the auto start circuitry.
6. The LPSW system is aligned to use one Unit 1&2 LPSW pump to recirculate most, but not all, LPSW flow from the CCW Inlet cross-connect header, through essential loads, to the RCW cooler discharge piping, backward through the RCW cooler controller bypass valves to the CCW Intake cross-connect header. Unit 3 LPSW system will be' cross-connected with Unit 1&2 LPSW system. There will still be inventory losses from the MDEFDWP motor coolers (if operating), the HPIP motor coolers, and makeup to the EWST system.

Alarm Response Guide 3SA-09

A-9

LPSW HEADER A/B PRESSURE LOW

1. Alarm Setpoint

1.1 70 psig decreasing

2. Automatic Action

2.1 Standby LPSW Pump starts on low pressure

3. Manual Action

3.1 Refer to AP/3/A/1700/024 (Loss of LPSW)

4. Alarm Sources and References

4.1 3PS-102 (LPSW '3A' Header)

4.2 3PS-103 (LPSW '3B' Header)

4.3 OP/3/A/1104/010 (Low Pressure Service Water)

4.4 Technical Specification 3.7.7

Question 62 SSS050801 SSS050801
Unit 3 plant conditions:

- MODE5
- 3A LPSW is tagged out for bearing replacement
- **3B** LPSW pump has just tripped

Which ONE of the following is correct? (.25)

A. Refer to AP/26, Loss of Decay Heat Removal to restore LPSW system operation to normal.

B. Refer to AP/24, **Loss** of LPSW to cross connect Unit 1&2 LPSW system with Unit 3 and maintain the current LPSW Pump combination.

C. Refer to AP/24, Loss of LPSW to cross connect Unit 1&2 **LPSW** system with Unit 3 and start an additional Unit 1&2 LPSW Pump.

D. Refer to AP/26, Loss of Decay Heat Removal to cross connect the LPSW system and the HPSW system.

Answer 62
C
A. Incorrect-AP/26 mitigates the loss of DHR and will not provide actions-to restore LPSW, AP/24 must be used to restore LPSW
B. Incorrect- **Cross** connecting LPSW alone is not a correct action
C. Correct - Cross connecting LPSW and starting an additional U1&2 LPSW Pump is the correct mitigation action
D. Incorrect - HPSW is not used to backup LPSW (procedurally)

1 POINT

Question 48

Plant conditions:

INITIAL CONDITIONS:
- "A" Service Air Compressor operating
- Normal cooling water aligned

Which ONE of the following is correct?

a loss of _____ would result is an automatic trip of the "A" Service Air Compressor and _____ could be aligned as backup cooling.

A. RCW / HPSW

B. RCW / LPSW

C. HPSW / acw

D. HPSW / LPSW

Question 48

T2/G1
078K4
078K4:03, Instrument Air System
Knowl
Knowledge of IAS design feature(s) and/or interlock(s) which provide for the following: Securing of SAS upon loss of cooling water (3.1*/3.3*)

Answer: A

A. Correct, RCW is the normal supply and if lost the compressor will trip on high temperature. The backup cooling supply is HPSW.

B. Incorrect, first part correct. Second part incorrect. HPSW is the backup cooling supply.

C. Incorrect, first part incorrect. RCW *is* the normal cooling supply. Second part incorrect. HPSW is the backup supply.

D. incorrect, first part incorrect. RCW is the normal cooling supply. Second part incorrect. HPSW is the backup supply.

Technical Reference(s):

Proposed references to be provided to applicants during examination: **None**

Learning Objective: **SSS-IA, R16**

Question Source: **NEW**

Question History: Last NRC Exam _____

Question Cognitive Level: **Memory or Fundamental Knowledge**
Comprehension or Analysis

25. Describe the automatic operation of the AIA compressors with regards to the following setpoints: (R39)

    25.1 88 PSIG

    25.2 100 PSIG

    25.3 105 PSIG

26. Explain the purpose for the filters before and after the desiccant air dryers in the AIA system. (R40)

27. When given a list of components supplied by IA, be able to identify those, which also have a supply from the AIA system. (R41)

28. If a line break occurs in the AIA system, explain how the original IA system is protected from depressurization. (R42)

29. Describe the basic principle of operation of the Sullair Service Air compressors: (R15)

30. Describe how a Service Air compressor-pumping rate is controlled. (R17)

31. Explain the purpose of the compressor blowdown valve on a Service Air compressor. (R18)

32. Explain three reasons that oil is injected into the compression chamber of a Station Air compressor. (R19)

33. Explain three purposes of the receiver tank/oil sump on the Station Air compressors. (R20)

34. **Describe the normal and alternate cooling water supplies to Service Air compressors. (R16)**

35. Explain the purpose of the oil stop valve in the Station Air Compressor. (R21)

36. Describe the Station Air compressor operation for the following switch positions: (R22)

    36.1 AUTO

    36.2 MANUAL

    36.3 STANDBY

37. Explain the purpose of the air receiver tank in the Service Air System. (R23)

38. Explain the purpose of the "Del-Tech" filters in the Service Air System. (R24)

39. Describe the operation of SA-141 (SA *to* IA Controller) including automatic operation and failure mode. (R52)

i) Compressor oil system (OC-SSS-IA-12)

1) Oil sump is the combination air receiver/oil sump.

2) Receiver contains approximately 25 gal of Texaco 10W HD URSLA mineral oil.

3) From bottom of receiver, oil pushed by pressure in receiver to main oil filter.

4) From main oil filter, goes to thermal valve.

(a) If oil temp below 125°F oil flows directly through thermal valve to compressor inlet.

(b) When oil temp rises, due to heat of compression, thermal valve begins to close, directing portion of oil through oil/water heat exchanger before it enters cornpression chamber.

5) **(Obj. R21)** Oil Stop Valve

(a) Prevents filling compression chamber with oil when unit is shut down.

(b) During operation, receiver pressure is above oil stop valve close pressure, so valve is open.

(c) When shut down, receiver pressure drops below oil stop valve close pressure so valve closes.

6) Oil flow switch

(a) Located in oil inlet line to compression chamber.

(b) Shuts unit off if no oil flow to compressor.

7) Temperature switch

(a) Located in compressor discharge line to receiver.

(b) Monitors air/oil mixture temperature.

(c) **Shuts unit off if temperature reaches 240°F.**

j) **(Obj.** R16) Compressor cooling system (OC-SSS-IA-13)

1) Oil cools the compression chamber and rotors.

2) Two water heat exchangers are supplied from the RCW system. One is used to cool the oil, and temperature is controlled by thermal valve in oil flew line. (RCW flows through tube side). The second heat exchanger cools the air before it is delivered to the system piping.

(a) **Backup cooling can be supplied from the HPSW system.**

3) A temperature regulating valve on RCW discharge doses when the compressor is shut down and oil temperature is Bow.

1 POINT

Question 49

Unit 2 plant conditions:

INITIAL CONDITIONS:
- MODE6
- De-fueling in progress

CURRENT CONDITIONS:
- Equipment hatch ***is*** opened to remove equipment

Which ONE of the following actions (if any) is required?

A. No action is required.

B. Suspend fuel movement in the Spent Fuel Pool ONLY

C. Suspend fuel movement in the Reactor Building ONLY

D. Suspend fuel movement in the Reactor Building and Spent Fuel Pool

Question 49

T2/G1

103K3.03, Containment System
Knowledge of the effect that a loss or malfunction of the containment system will have on *the* following: Loss of containment integrity under refueling operations.
(3.7/4.1)

Answer: C

A caution in *OP/1/A/1502/007* (Operations B*efueling/Re*fueling Responsibilities) Limits and Precautions states:

IF a direct *flow* pafh from the Reactor Building atmosphere *to* the outside atmosphere *is* discovered, immediately suspend all operations involving core alterations or movement of irradiated fuel in the Reactor Building.

A. Incorrect, movement of irradiated fuel in the RB must be stopped. Would be true if moving un-irradiated fuel.

B. Incorrect, stopping fuel movement in the SFP is not required.

C. Correct, movement of irradiated fuel In the RB must be stopped.

D. Incorrect, stopping fuel movement in the SFP *is* not required.

Technical Reference(s): **OP/1/A/1502/007 (Operations Defueling/Refueling Responsibilities**

Proposed references to be provided to applicants during examination: **None**

Learning Objective: **FH-FHS**

Question Source: **NEW**

Question History: Last NRC Exam _____

Question Cognitive bevel: **Memory or Fundamental Knowledge**
Comprehension or Analysis

a) If one train is inoperable, the operable train must be in operation or movement of fuel and crane operations suspended.

b) If no SFP ventilation is operable, suspend all movement of fuel within the SFP and all crane operations over the SFP until one train is in operation.

c) This will reduce the off-site dose from a duel handling accident.

4. (Obj. **R21**) ITS **3.9.4** required one DHR Loop OPERABLE and in operation when In MODE 6 with water Bevel ≥ 21.34 ft. above the reactor vessel flange. The required loop may be taken out of operation for ≤ 1 hour during an **8** hour period provided **no** operations are allowed which will reduce RCS boron concentration.

a) **A** level indication placard has been mounted on the FTC wall to indicate 26.34 ft.

b) **A** pump may be stopped temporarily for fuel assembly insertion, at the discretion of the SRO in charge of Refueling.

5. ITS **3.9.5** requires 2 BHR loops OPERABLE and one loop in operation when the water level is ≤ **21.34** ft. above the reactor vessel flange.

6. Reactor Building Containment Closure guideiines

a) **If** a direct flow path from the reactor building atmosphere to the outside atmosphere is discovered, all operations involving fuel handling must be immediately suspended.

b) Refueling RB Containment closure control enclosure of OP/1,2,3/A/1502/09 must be completed prior to the beginning of core alterations or movement of irradiated fuel assemblies within containment. (If containment OPERABILITY is maintained during the time frame between defueling and refueling, it is not necessary to run the checklists again.)

c) ITS **3.9.3** requires the reactor building purge system, including RIA-45, be tested prior to beginning core alterations or movement of irradiated fuel assemblies within containment.

1) This verifies that these components will function if a fuel handling accident were to occur.

2) An incident occurred on Unit 1 in March of **1986** during refueling. Operations allowed I&E to work on **RIA-43** during fuel movement. I&E had to cut the common pump for RIA's-43, 44, 45, 46 off to work on **RIA-43.** When they did this it took **RIA45** out of service, 4 assemblies were moved during **this** time, so Tech Specs. were violated.

d) At least one door on the personnel hatch, one door on the emergency hatch and the equipment hatch cover in place with a minimum of four bolts (90° apart) securing the cover is required during fuei handling in the reactor building.

1 POINT

Question 50

Which ONE of the following describes the operation of the Unit Vent Radiation Monitors 1RIA-45 and 1RIA-46 when the switchover acceptance range setpoint is reached?

1RIA-45 will read _____ and 1RIA-46 will provide _____

A. offscale high / only alarm and unit vent radiation level indication

B. offscale high / the same interlock functions that RIA-45 performs

C. ZERO / only alarm and unit vent radiation level indication

D. ZERO / the same interlock functions that RIA-45 performs

Question 50
T2/G1

073A4.02, Process Radiation Monitoring (PRM) System
Ability *to* manually operate and/or monitor in the control room: Radiation monitoring system control panel (3.7/3.7)

Answer: D

A. Incorrect. 1RIA-45 will read zero and KIA-46 will provide the same interlock functions as 1RIA-45 (which would include tripping Purge fans and closing Purge valves).

B. Incorrect. 1RIA- 45 will read zero. Second part correct.

C. Incorrect. 1RIA-46 will provide same interlock function **as** 1RIA-45.

D. Correct. 1RIA45 will read ZERO and 1RIA-46 will provide the same interlock functions that 1RIA45 performs.

Technical Reference(s):

Proposed references to be provided to applicants during examination: **None**

Learning Objective: **RAD-RIA, R15**

Question Source: **Bank # RAD011501**

Question History: Last NRC Exam _____

Question Cognitive Level: **Memory or Fundamental Knowledge**
Comprehension or Analysis

14. Without the use of reference, when AP/1700/018, (Abnormal Release of Radioactivity), is required to be utilized by the operator be able to demonstrate the following: (R16)
    - State the Entry Conditions and Immediate Manual Actions in the AP.
    - Explain the basis for limits, cautions, notes and major steps in the AP
    - Based on plant data received, summarize proper operator actions and strategies required in the AP to mitigate the abnormal plant condition.
    - Utilizing available operator controls and instrumentation both inside and outside the control room interpret the indications and take proper actions per the AP that should mitigate the abnormal condition.
    - Provide proper directions to operators and supporting groups performing actions of the AP outside the control room

15. Evaluate an inoperable monitor to determine if any required actions are necessary per TS & SLC. (R9)

16. **Utilize Area and Process Radiation Monitor indications to analyze plant conditions and deternine the proper course of action required to prevent the potential inadvertent release of radioactive effluent to the environment. (R15)**

H. **1, 3RIA-42** - Monitors RCW return from auxiliary building - (NaI)

1. Located in TB basement behind backwash pumps.
2. A pump on the skid ensures sufficient sample Row.
3. RIA-42 is basically the same as RIAs-31, 35 and 50 except that they have slightly different pumps.
4. Detects potential leaks in SF coolers, primary sample coolers and seal return coolers.

I. **1, 2, 3RIA-43, 44, 45, 46** - Unit Vent Monitors

1. Particulate (RIA-43), Iodine (RIA-44), Normal gas (RIA-45), High Gas (RIA-46) "PIGG"
2. RIAs-43 & 45 are plastic beta scintillation detectors.
3. RIA-44 is a NaI detector.
4. RIA-46 is a Cadmium Telluride solid state detector.
5. Located on 6th floor Auxiliary Building in the Purge Equipment room close to the Unit Vent Stack.
6. On HIGH alarm, RIA-45 will do the following:
   a) close PR-2 through PR-5
   b) trip the main and mini purges
   c) actuates statalarm "RM Reactor BLDG Purge Disch RAD Inhibit"
7. **When RIA-46 reaches the "switchover acceptance range setpoint", the following occurs:**
   a) RIA-45 will read zero
   b) RIA-46 will now perfom the same interlock functions that RIA-45 performed
   c) This provides a backup function so that in case of a failure of RIA-45 HIGH alarm, then RIA-46 HIGH alarm will actuate the required interlock functions. Normally RIA45 HIGH alarm setpoint will be reached prior to RIA-46 reaching the "switchover acceptance range setpoint".

Question 19 RAD011501 RAD011501

Which ONE of the following describes the operation of the Unit Vent Radiation Monitors RIA-45 and RIA-46 when the switchover acceptance range setpoint is reached'?(.25)

RIA45 will read _____ and RIA-46 will provide _____

A) **offscale** high / only alarm and unit vent radiation level indication.

5) offseale high / the same interlock functions that WBA-45 performs.

C) ZERO / only alarm and unit vent radiation level indication.

D) ZERO / the same interlock functions that RIA-45 performs.

Answer 19
D
A. Incorrect. WIA-45 will read zero and **WIA-46** will provide the same interlock functions as RIA-45 (which would include tripping Purge fans and **dosing** Purge valves).
B. Incorrect. RIA-45 will read zero.
C. Incorrect. RIA-46 will provide same interlock function as RIA-45.
D. correct.

1 POINT

Question 51

Which ONE of the following is used at ONS in order to provide the **greatest** radioactive iodine removal capability following a LOCA within containment?

Operating the containment spray system using..

A. high pH water from the containment sump.

B. high pH water from the BWST.

C. low pH water from the containment sump.

D. low pH water from the BWST.

Question 51
T2/G1

026K4.06, Containment Spray System
Knowtedge of CSS design features andlor interlocks which provide for the following: Iodine scavenging via the CSS (2.8/3.2)

Answer: A

A. Correct - Sodium-Hydroxide is added to the RBES to promote the reaction of iodine maintaining it in a soluble form. The addition increases the pH of the spray and makes it basic counteracting the acid of the boron from the BWST. A basic solution increases the effectiveness of the reaction.

B. Incorrect - Sodium-Hydroxide is not added to the BWST.

C. Incorrect - Sodium-Hydroxide is required to be added to the sump for better Iodine response.

D. incorrect - BWST water is very acidic which is not productive for this reaction.

Technical Reference(s):

Proposed references to be provided to applicants during examination: None

Learning Objective: TA-AM7, R5

Question Source: Bank # TA040501

Question History: Last NRC Exam _____

Question Cognitive Level: Memory or Fundamental Knowledge
Comprehension or Analysis

TRAINING OBJECTIVES

TERMINAL OBJECTIVE

Become better prepared to mitigate the consequences of possible environmental releases of fission products following a core-damaging accident by examining the probable behavior of those fission products that would likely be of most concern following an accident, and by examining some of the more likely escape routes for these nuclides. (T1)

ENABLING OBJECTIVES

1. List the four principal fission products that would likely be of most concern in regards to environmental releases following a core damaging accident. (R1)

2. List the two basic categories of events that can lead to core damage and describe the four stages of the loss of core cooling event category. (R2)

3. Recognize that the major off-site dose consequences resulting from core-damaging accidents would be from short-lived, gaseous nuclides released to the atmosphere. (R3)

4. Explain the expected behavior of the noble gas nuclides, such as Kr-85, Kr-88, Xe-131, and Xe-133, if they were released from the fuel following a core-damaging accident. (R4)

5. Describe how gaseous, elemental iodine concentrations in the RB can be reduced following a core-damaging accident; explain the relationship that the pH of the RBS water has on this process, and how RBS water pH may be controlled. (R5)

6. Explain how the reaction between elemental iodine and cesium can prove to be beneficial following a core-damaging accident. (R6)

7. List five of the more probable release paths for gaseous activity from the RB into the Auxiliary Building which can generally be readily isolated by the operator. (R7)

8. List five of the possible release paths for gaseous activity from the RB directly to the environment. (R8)

9. Describe the leak pathway to the environment for noble gases that was the most likely contributor to the offsite doses recorded for the TMI-2 accident, and explain what made this the most likely source. (R9)

10. Explain why the fission product activity in the fuel gap region consists of, for the most part, the longer-lived nuclides such as Kr-85 and Cs-137, and why this can be significant for reactor accidents. (R10)

3. Protection of the environment from iodine releases following an accident, like that for the noble gases, is dependent upon the ability to contain the nuclides within the RB until the concentrations are reduced to acceptable levels. Unlike the noble gases, though, the iodines are very volatile, meaning, that in addition to decay, steps can be taken to reduce the concentrations in the RB through additional means, too.

4. Gaseous, Elemental Iodine quickly reacts with water In the RB environment following an accident, greatly reducing the Inventory of gaseous iodine present. This reaction occurs even more readily if the water has a high pH (i.e. it is basic); sodium hydroxide would be added to the RBS water following an accident, raising the pH and helping the RBS to "scrub" gaseous iodine from the RB atmosphere. (This higher pH also would help to reduce the acidic corrosion of the metal in the RB from the boric acid spray).

5. Hypoisdous acid is formed when Elemental Iodine combines with water; a small amount of hypoiodous acid may become airborne after it is formed, and the problem with this is that the RBS entering the RB will no longer be effective in scrubbing this iodine that "got away." The small amount formed, though, will be effectively handled by the charcoal filters in the PRV System.

6. Organic iodide is believed to be formed when elemental iodine combines with organic compounds in the containment building, such as Methane or Ethylene, to form Methyl or Ethyl Iodide.

   a) Organic iodides are difficult to remove from the containment environment because they are not extremely reactive; while RBS is relatively ineffective, charcoal filtering can be acceptable if the charcoal is fresh and dry. If the charcoal is old, or if a high humidity exists, the effectiveness is greatly reduced.

   b) Fortunately, only about 2% of the total iodine released from the fuel will manifest itself as Organic Iodide.

7. (Obj. R6) Elemental Iodine produced by the fission process can quickly react with another fission product, Cesium, to form Cesium Iodide (CsI).

   a) At high temperatures (2200 ° F) CsI forms in the vapor state, but then quickly condense as Cesium Oxide particles.

   b) CsI is extremely soluble in water, so that following a LOCA, almost all of the CsI formed will be retained in solution.

   c) This high solubility should prove to be very beneficial in limiting the amount of gaseous iodine released to the environment following an accident.

Question 27 TA040501 TA040501

Which ***ONE*** of the following is used at ONS in order to provide the greatest radioactive iodine removal capability following a LOCA within containment?

Operating the containment spray system using.. .

A) high pH water from the containment sump.

B) high pH water from the BWST.

C) low pH water from the containment sump.

D) low pH water from the BWST.

Answer 27
A

A. Correct - Sodium-Hydroxide is added to the RBES to promote the reaction of Iodine maintaining it in a soluble form. The addition increases the pH of the spray and makes it basic counteracting the acid of the boron from the BWST. A basic solution Increases the effectiveness of the reaction.

B. Incorrect - Sodium-Hydroxide is not added to the BWST.

C. Incorrect - Sodium-Hydroxide is required to be added to the sump for better Iodine response.

D. Incorrect - BWST water is very acidic which is not productive for this reaction.

1 POINT

Question 52

Which ONE of the following **is** correct?

Actuation of ES channels _____ will result in RB Essential Isolation and _____ psig **will** cause actuation.

ASSUME ACTUAL SETPOINTS

A. 1 and 2 / RB pressure of 1.8

B. 1 and **2** / RCS pressure of 1120

C. 5 and *6* / **WB** pressure of 6.8

D. 5 and 6 / RCS pressure of 480

Question 52
T2/G1
193K4.06, Containment System
Knowledge of containment system design feature(s) and/or interlock(s) which provide for the following: Containment isolation system (3.1/3.7)

Answer: C

A. Incorrect, first part incorrect. ES **1** and 2 will cause RB Non-essential isolation. Second part incorrect. It would not cause ES **1** and 2 to actuate.

B. Incorrect, first part incorrect. ES **1** and 2 will cause RB Non-essential isolation. Second part incorrect. It would cause ES **1** and 2 to actuate.

C. Correct, RB Essential isolation occurs when ES channels 5 and 6 actuate which will actuate at RB pressure of 3.0 pslg.

D. Incorrect, first part correct. Second part incorrect. RCS pressure of 480 would muse ES channels 3 and **4** to actuate.

Technical Reference(s):

Proposed references to be provided to applicants during examination: **None**

Learning Objective: **IC-ES, R3**

Question Source: **NEW**

Question History: Last NRC Exam _____

Question Cognitive Level: **Memory or Fundamental Knowledge**
comprehension or Analysis

OBJECTIVES

TERMINAL OBJECTIVE

1. Properly describe the operation of all components of the ESG system during normal, inadvertent, and emergency operations. (T1)

ENABLING OBJECTIVES

1. State the purpose of the Engineered Safeguards System. (R1)

2. List the input signals and the sources of power for the Engineered Safeguards analog subsystem. (R2)

3. **State the function of the following components located in the ES analog cabinets including any associated setpoints: (R3)**

   3.1 RC Pressure Trip Bistable Modules (HPI and LPI)

   3.2 RC Pressure Inhibit Bistable Modules (HPI and LPI)

   3.3 RC Pressure Test Module

   3.4 RB Pressure Trip Bistable Module

   3.5 RB Pressure Test Module

   3.6 High RB Pressure Contact Buffers

2. LECTURE PRESENTATION

2.1 System Overview

A. The Engineered Safeguards System monitors selected plant parameters that are indicative of the occurrence of a major loss-of coolant accident (LOCA). These parameters are reactor coolant system pressure and reactor building pressure. If these parameters reach trip setpoints, associated subsystems are actuated.

B. Protective Actuation Functions and Associated Setpoints

Listed below are the general protective actuation functions that are initiated by the ES system:

Refer to OC-IC-ES-18

	TS Setpoint	Actual Setpoint
High Pressure Injection, Keewee Emerg. Start and RB Non-Essential Isolation	RCS ≥ 1590 psig **OR** RB ≤ 4 psig	RCS 1600 psig OR RB 3.0 psig
Low Pressure Injection and LPSW	RCS ≥ 500 psig OR RB ≤ 4 psig	RCS 550 psig OR RB 3.0 psig
Reactor Building Cooling, Penetration Room Ventilation and RB Essential Isolation	RB ≤ 4 psIg	RB 3.0 psig
Reactor Building Spray	RB ≤ 15 psig	RB 10 psig

These functions are discussed in the following sections.

1. HPI, Keowee Emergency Start and Reactor Building Non-Essential Isolation

The purpose of HPI system initiation is to assure that sufficient water from the BWST flows into the RCS to control reactor coolant inventory and to provide core coding during certain LOCAs. HPI system initiation

c) LPI Trip Bistable **(3.1)**

1) Receives input from WR RC pressure transmitter.

2) Will trip If RC pressure decreases below 550 psig unless bypassed.

3) Output is fed through an OR gate to digital channels 3 & 4.

4) Once tripped, must be manually reset.

d) LPI Inhibit Bistable **(3.2)**

1) Allows manually bypassing the LPI trip bistable when RC pressure is < 900 psig.

2) Bypass is automatically removed when RC pressure increases above 900 psig.

e) RC Pressure Test Module **(3.3)**

1) Used by I&E to check trip setpoints.

2) When placed in the TEST position all associated outputs go to the tripped state.

f) RB Pressure **Trip** Bistable **(3.4)**

1) Receives input from RB pressure transmitter.

2) Will trip **if RB** pressure increases above **3 psig.**

3) **Output is** fed **to** digital channels 5 & 6 and also **to** digitals **1, 2, 3** & **4** through **OR** gates.

4) Once tripped, **must** be manually reset.

g) RB Pressure Test Module **(3.5)**

1) Used by I&E to check trip setpoints.

2) When placed in the TEST position all associated outputs go to the tripped state.

h) High RB Pressure Contact Buffers **(3.6)**

NOTE: The contact Buffer Modules provide an isolating interface between input from the RB pressure switches and ESFAS.

1) Receive input from the RB pressure switches.

2) Will trip if RB pressure increases above 10 psig.

3) One provides output to digital channel 7 and the other provides output to digital channel 8.

4) Automatically reset when RB pressure decreases below 10 psig.

1 POINT

Question 53

Unit 1 plant conditions:

INITIAL CONDITIONS:
- Time = 0100
- RCS pressure = 2135 psig
- 1A Main Steam line pressure = 945 psig
- 1B Main Steam line pressure = 947 psig
- HPI forced cooling in progress
- RB pressure = 0.1 psig

CURRENT CONDITIONS:
- Time = 0125
- RCS pressure = 2045 psig
- 1A Main Steam line pressure = 901 psig
- 1B Main Steam line pressure = 906 psig
- RB pressure = 0.4 psig and slowly increasing

Which ONE of the following is correct?

The RB pressure increase is most likely a result of _____

A. Main Steam leak in containment

B. Quench Tank rupture disk blown

C. Pressurizer code safety valve lifting

D. Development of an RCS leak in containment

Question 53
T2/G1

007K1.01, Pressurizer Relief Tank/Quench Tank System (PRTS)"
Knowledge of the physical connections andlor cause-effect relationships between the PRTS and the following systems: Containment system (2.9/3.1).

Answer: B

A. Incorrect, Main Steam leak in containment would cause pressure to increase but we have no indication that this has occurred. The most likely cause is the QT relieving to containment.

B. Correct, during HPI F/C flow is directed to the QT. Over time pressure will buildup causing the rupture disk to relieve QT pressure to the containment atmosphere. This will cause RB pressure to slowly increase.

C. Incorrect, code valves lifting would cause RB pressure to increase. RCS pressure is not high enough for this to occur.

D. Incorrect, an RCS leak could cause RB pressure to increase but we have no indication *that* this has occurred.

Technical Reference(s):

Proposed references to be provided to applicants during examination: None

Learning Objective: PNS-CS, R7

Question Source: NEW

Question History: Cast NRC Exam _____

Question Cognitive Level: Memory or Fundamental Knowledge
Comprehension or Analysis

10. Describe the basic operation of the Quench Tank (QT) and QT Cooler including: (R7)

    10.1 Purpose during normal and abnormal operating conditions

    10.2 Limits on QT pressure and level, the reasons for these limits, and how QT pressure and level are regulated

    10.3 The primary purpose for the QT Cooler and how it is placed in operation

    10.4 The general list of components that discharge to the QT

11. Briefly describe the general purpose of the Component Drain Header. (R11)

12. List the six major uses for the Component Drain Pump. (R8)

13. Describe the basic operation of the Deborating Demineralizers to include: (R10)

    13.1 Primary purpose

    13.2 When the Deborating Demineralizers are used

14. Briefly describe the test method of the: (R9)

    14.1 PT/0/A/150153, Coolant Storage System Leakage Test

    14.2 PT/0/A/251/08, CS-73 Functional Test

15. For PT/0251/003, CBAST Pump Test, describe: (R14)

    15.1 The purpose

    45.2 How the test is performed

16. Given a copy of PT/0251/003, CBAST Pump Test, and a set of data, evaluate if the acceptance criterion is being met. (R15)

17. For PT/0251/017, RC BTP Test, describe: (R16)

    17.1 The purpose

    17.2 How the test is performed

18. Given a copy of PT/0251/017, RC BTP Test, and a set of data, evaluate if the acceptance criterion is being met. (R17)

E. Quench Tank and Quench Tank Cooler (OC-PNS-CS-1)

1. **(OBJ.R1 &R7)** A 780 ft^3 or ≈ **5800** gallons Quench Tank is provided for each Unit, primarily to quench the effluent from the PZR relief valves, should they lift. The tank is partially filled with water. Relief effluent enters the QT through sparger nozzles below the water level to condense the steam as it enters. The water level of the QT must be carefully controlled between **85 ±5** inches; level too low would not provide sufficient quenching of the steam relieved to it; level too high would cause the QT pressure to increase too rapidly and cause the rupture disk in the top of the tank to rupture sooner. This disk is designed to rupture at the tank design pressure of **55** psig to relieve tank pressure to the RB atmosphere.

   a) Max QT (P) = 49 psig; Max QT **(T) = 180°F,** Level **= –34.94 gals/in**

   b) A QT cooler, supplied with CC on the shell sids ,can be placed in operation to cool the tank contents by circulating it through the cooler using the Component Drain Pump or Quench Tank Drain Pump.

2. **(OBJ.R7)** The tank also acts as a collection point for all radioactive vents in the reactor building. These vents are for the following components:

   e) Pressurizer

   b) Reactor Vessel

   c) Control Rod Drives

   d) Core Flood Tanks

   e) Reactor Coolant Pumps

   f) Reactor Coolant Looos

   Most of these vents are used only during the initial filling of the Reactor Coolant System and drawina a bubble following an outage. The Quench Tank is vented to the vent header outside the Reactor Building. The water In the QT can be blanketed with nitrogen from the nitrogen supply system. Normal pressure in QT is less than 5 psig.

3. Quench Tank also acts as a collection point for Steam Generator vents when filling to Wet Lay-up.

F. Quench Tank Drain Pump

1 POINT

Question 54

Which ONE of the following ***MCCs*** supplies power ***to*** 3LP-103 (Post LOCA Boron Dilution, Normal Path)?

A. 3XL

B. 3DP

C. 3XS1

D. 3XSF

Question 54
T2/G1

005K2.03, Residual Heat Removal System (RHRS)
Knowledge of bus power supplies to the following: RCS pressure boundary motor-operated valves (2.7*/2.8*)

Answer: D

A. Incorrect, 3XL does not supply 3LP-103 but does supply other LP valves.

B. Incorrect, 3DP does not supply 3LP-103.

C. Incorrect, 3X1 does not supply 3LP-103 but does supply other LP valves.

D. Correct, 3LP-103 (Post LOCA Boron Dilution, Normal Path) is powered from 3XSF MCC.

Technical Reference(s):

Proposed references to be provided to applicants during examination: **None**

Learning Objective: **EAP-SSF, R14**

Question Source: **NEW**

Question History: **Last** NRC Exam _____

Question Cognitive Level: **Memory or Fundamental Knowledge**
Comprehension or Analysis

11.4 Precautions that must be observed when starting the RCMU Pump with the Override switch.

12. List all ES valves that have control available at the SSF. (R13)

13. Describe the consequences that swapping power supplies to ES valves from the plant to the SSF will have on the ES valves ability to respond to an ES signal. (R14)

14. State the purpose of the SSF Auxiliary Service Water System. (R15)

15. Draw a basic one-line diagram of the ASW system. (R16)

16. State the purpose of the dedicated portable submersible pump. (R18)

17. Explain why the dedicated portable submersible pump must be installed and operating within 3 hours and 20 minutes of D/G emergency start if a loss of CCW forced and siphon flow has occurred. (R19)

18. State the purpose of the ASW Suction Line Air Ejector. (R17)

19. Explain why the SSF ASW pump is started any time the D/G is emergency started in an actual SSF event. (R20)

(OBJ. R14)

2. The SSF control room operator WILL NOT have control of these valves until after 1,2,3XSF MCCs have been swapped to their alternate supply (OXSF).

   Once the power supplies to 1,2,3XSF have been swapped, the ES valves (5 listed above) that are controlled from the SSF control Mom WILL NOT receive an ES signal from the Unit ES RZ control panels.

3. The indicating tights in the Unit control room for the following valves will be lost when the MCCs have been swapped to their alternate supply:

   3.1 HP-3 (A Letdown Clr Outlet)--ES valve

   3.2 HP-4 (B Letdown Clr Outlet)--ES valve

   3.3 HP-20(RCP Seal Return)--ES valve

   3.4 RC-4 (Pzr Relief Block)--Non-ES

4. One event that the SSF is designed for is sabotage. Two LPI valves are powered from/through the SSF for this event. The intent is that these valves should be controlled such that a saboteur could not operate these valves from within the plant in the event the plant is taken over.

   4.1 1,2,3LP-2 (LPI Return Block) is powered from 1,2,3XS1 MCC. The power cables going to these valves are routed through starter breakers in the SSF. These valves are controlled from the respective unit's control room.

   4.2 1,2,3LP-103 (Post LOCA Boron Dilution, Normal Path) is powered from 1,2,3XSF MCC. These valves ere controlled from the SSF control room ONLY.

Selected Limits and Precautions--RCMU System

1. Use of RCMU Pump may affect reactivity in the RCS and SF systems.

2. Under emergency conditions SSF RC makeup pump lube oil temperatures in the gear reducer and the pump assembly may run up to 420°F for 90 hours.

3. When the SSF RC makeup pump is started in the OVERRIDE mode, the suction valves SF-82 and SF-97 interlocks are bypassed. Statalarm is provided to alert the operator if the pump is running with its suction valve(s) closed. The pump should be stopped immediately if this condition exists.

4. In RC MAKEUP PUMP OVERRIDE mode, the low flow cutout switch and the low oil pressure cutout switch are bypassed.

5. Maximum allowable suction temperature for the SSF RCMU Pump is 212°F.

1 POINT

Question 55

Unit 2 plant conditions:

- Under-voltage condition existed for 5 minutes on 2KX Inverter
- 2KX inverter has been manuatly bypassed
- Under-voltage condition has been cleared for the past 30 minutes

Which ONE of the following **is** correct?

Repositioning the Manual Bypass Switch on an essential inverter'to the Normal position will swap *toads to* the inverter output, if the ....

A. Static Transfer switch has already been manually (via push button) reset to Inverter output.

B. Manual Bypass switch was swapped before the Static Transfer switch was manually (via push button) reset to Inverter output.

C. ASCO Transfer switch has been swapped to A/C line position.

D. Inverter Bypass switches have been aligned to bypass the inverter.

Question 55

T2/G1

062A3.04, AC Electrical Distribution System
Operation of inverter (e.g., precharging synchronizing light, static transfer)
(2.7/2.9)

Answer: A

A. Correct, STS would have to have already been transferred (pb - Inverter to Load) to swap loads to Inverter output using the Man. Bypass Sw.

B. Incorrect, the STS will still be aligned to AC Line (due to the undervoltage). It must be reset (pb) to the Inverter. Without this, operation of the MBS to Normal will not restore Inverter output to the loads, and the ASCO sw will swap to AC Line

C. Incorrect, Man. Bypass Sw. will not be able *to* connect the Inverter *output* to the loads if the ASCO Sw has been swapped to AC line; (ASCO Sw is located downstream of the MBS)

D. Incorrect, if the Inv. Bypass Sws are aligned *to* bypass the inverter, then MBS operation will have no affect

---

Technical Reference(s):

Proposed references to be provided to applicants during examination:

Learning Objective: EL-VPC, R4

Question Source: Bank # EL070404

Question History: Last NRC Exam _____

Question Cognitive bevel: Memory or Fundamental Knowledge
Comprehension or Analysis

Contacted Gerry *Laska* on *4/5/04* to discuss the selected *KA*. At *ONS* the vital *AC* busses do not have automatic actions based on bus amperage. *Mr. Laska* randomly selected another *KA*. The new KA is *062A3.04.*

2.4 Explain the operation of the inverter fans and how their operation affects inverter operation.

3. Describe, or draw, the power path from the DC power bus to the KU, KOAC, KI, and KX inverters, including the backup or AC Line source. (R3)

4. Discuss the Essential inverters including: (R4)

4.1 Differences between the vital and essential inverters.

4.2 Differences between the KI, KX inverters and the KU inverter.

4.3 Demonstrate the ability to locate and explain all panel meters, lights, switches and breakers.

4.4 Discuss the operation of the essential inverters including:

A. Operation of the Manual Bypass switch.

B. Operation of the Static Transfer switch.

C. The function and operation of the ASCO Transfer switch.

D. Operation and location of the Inverter Bypass switches.

1. Explain what would happen if both SW #2 and SW #3 Bypass switches were opened.

E. Operation of the precharge switch.

1. Explain why the Precharge Light should be lit before closing the DC INPUT circuit breaker on an Essential inverter.

F. Describe the startup and shutdown of the Inverters.

G. Describe the inverter status during normal operation.

4.5 Explain the statalarms associated with the essential inverters:

A. Identify three conditions that will cause a statalarm and identify the location of the alarms.

4.6 Explain the operation of the Inverter fans and how their operation affects inverter operation.

5. Explain the difference in the switching arrangements for Inverter and AC Line between the Vital Power panelboards and the Essential Power panelboards. (R5)

6. Explain how it is possible to interrupt power to the AC power panelboard if the three switches of the Static Inverter Bypass Switch are operated incorrectly. (R6)

7. List the major loads supplied by the KI, KU, and KX inverters. (R7)

8. Describe the purpose of the KOAC inverter. (R8)

B. Essential Power System Operation (Obj. R4/R5) (Refer to OC-EL-VPC 1&6)

1. During normal system operation, each Essential Power Panelboard is energized via its associated Essential inverter. Each inverter is energized from its associated 125VDC Instrumentation and Control Power Panelboard.

2. Each 125VDC Instrumentation and Control Power Panelboard is energized from one of the unit's 125VDC Control Power buses and battery chargers through the associated set of isolating diodes.

   a) Should a problem develop with the battery charger or bus supplying an Essential inverter, whereby this source is lost, the unit's other 125VDC Control Power bus will be auctioneered to supply the inverter through the isolating diode network without an interruption in power.

3. If a problem develops with an Essential inverter, and it fails to provide power, an automatic transfer to AC line (Regulated Power) supply should occur.

4. Transfer to Regulated Power (AC bine)

   a) Unlike the Vital inverters that can only be manually transferred to Regulated Power, the Essential inverters also have automatic transfer to Regulated Power. As a matter of fact, there are three possible manual transfers and two possible automatic transfers for each Essential inverter.

   b) Automatic transfers

      ❙❯ Static Transfer switch

         (a) The static transfer switch looks at the output voltage at two different locations. If the voltage at either one of these locations is lost, the static transfer switch will automatically swap the inverter to AC line within 1/4 cycle. The static transfer switch will also swap to AC line on high current.

            (1) If the inverter voltage is restored or the high current problem is resolved within *30* seconds, €he switch will automatically swap back to the inverter. This results in uninterrupted power to the panelboard. If >39 seconds have elapsed and conditions on the inverter have been resolved, the load must be manually swapped back to the Inverter.

2) Static Transfer switch

(a) The Static Transfer switch can be forced to transfer using the pushbuttons on the front of the panel.

3) Inverter Bypass Switches (Obj. R6)

(a) An endosure that sits near the static inverter cabinet, and contains three breaker-type switches, SW-1, SW-2, and SW-3.

(b) The switches are arranged so that the inverter can be completely isolated from the AC panelboard and the Regulated Power Supply, while the Regulated Power Supply is connected directly to the AC panelboard.

(c) This arrangement allows for complete isolation of the inverter for maintenance.

(d) From the diagram of the inverter circuit (OC-EL-VPC-6), it can be seen that:

(1) Anytime SW-2 is closed, the AC panelboard is connected directly to the Regulated Power Supply.

(2) In order for the inverter automatic transfer action to function, both SW-1 and SW-3 must be closed.

(3) SW-3 must be closed to connect the output of the inverter to the AC panelboard.

(4) If both SW-2 and SW-3 are open, the AC panelboard wilt lose power.

C. Alarms (Obj. R4)

1. Each Essential inverter (KI, KU&KX) has an Inverter System Trouble statalarm that will alarm in the Control Room.
2. These alarms are fed from local panels (1) (2) (3)SA12 and (1) (2) (3)SA13 which will alarm for the following conditions:

a) Low input voltage

b) Low output voltage

c) Bypass voltage failure (Low AC Line voltage)

d) ICS/Aux. or Computer Inverter Bypass Switch/ASCO Transfer Switch

Question 248 EL070404 EL070404

Unit 2 conditions:

- Under-voltage condition existed for 5 mins. on 2KX Inverter
- 2KX Inverter has been manually bypassed
- Under-voltage condition has been cleared for the past 30 mins.

Which ONE of the following is correct? (.25)

Repositioning the Manual Bypass Switch on an essential inverter to the Normal position will swap loads to the inverter output, if the ....

A) Static Transfer switch has already been manually (pb) reset to Inverter output.

B) Manual Bypass switch was swapped before the Static Transfer switch was manually (via pb) reset to Inverter output.

C) ASCO Transfer switch has been swapped to A/C line position.

D) Inverter Bypass switches have been aligned to bypass the inverter.

Answer 148
A
A, Correct: STS would have to have already been transferred (pb - Inverter to Load) to swap loads to Inverter output using the Man. Bypass Sw.
B, Incorrect: The STS will still be aligned to AC Line (due to the undervoltage). It must be reset (pb) to the inverter. Without this, operation of the MBS to Normal will not restore Inverter output to the loads, and the ASCO sw will swap to AC Line
C, Incorrect: Man. Bypass Sw. will not be able to connect the Inverter output to the loads if the ASCO Sw has been swapped to AC line; (ASCO Sw is located downstream of the MBS)
D, Incorrect: If the Inv. Bypass Sws are aligned to bypass the inverter, then MBS operation will have no affect

1 POINT

Question *56*

Unit 1 plant conditions:

- Reactor Building Main Purge in operation

Which QNE of the following will cause the RB Purge fan to trip?

A. ES Channel 1 actuates

B. 1KIA-45 reaches ALERT setpoint

C. Suction pressure = 5 inches of water vacuum

D. Starting the Unit 1&2 SFP Filtered Exhaust Fan #1 - check damper

Question 56
T2/G2
029K4.03, Containment Purge
Knowledge of design features andlor interlocks which provide for the following:
A
Automatic purge isolation (3.2*/3.5)

Answer: A

A. **Correct, ES Channel 1 will close 1PR-1 and 1PR-6. This will cause the RB purge fan to trip.**

B. incorrect. 1RIA-45 will trip the purge when the HIGH setpoint is reached.

C. Incorrect. 9" of water vacuum is required to trip the fan.

D. Incorrect. The Main Purge Fan, if started, will trip the SFP Ventilation *Exhaust* Fan (Units 2 and 3 only). Mini Purge fans are NOT interlocked with the SFP Ventilation Exhaust Fans.

Technical Reference(s):

Proposed references to be provided to applicants during examination: **None**

Learning Objective: **FNS-RBF, R4, R5, R7**

Question Source: **NEW**

Question History: Last NRC Exam _____

Question Cognitive bevel: **Memory or Fundamental Knowledge**
Comprehension or Analysis

5. Given the enclosure for removal/restoration of the Equipment Hatch: (R6)

   5.1 Explain the personnel safety considerations that result in stopping the RB Purge fan prior to Equipment hatch removal/replacement

   5.2 Describe the purpose of the desired minimum flow limit on RB Purge flow with the Equipment hatch removed

   5.3 Describe the major difference in the enclosures for Equipment hatch removal/replacement with and without the RB Purge in operation

6. Describe the response of the RBP system to an actuation of Engineered Safeguards channels 1&2. (R7)

7. Describe the response of the RBP system to a "High" alarm on RIA-45 or RIA-46. (R5)

8. Explain €hepurpose for each RBP system interlock and when given plant conditions: (R4)

   8.1 Predict system/component/indication response to RBP system interlock actuation.

   8.2 Describe necessary actions andlor plant status required to return systemlcomponenffindication to normal operating status.

9. Given a specific RBP Limit and Precaution describe the purpose for the Limit or Precaution. (R8)

10. Given a specific set of conditions, determine if "favorable" or "unfavorable" conditions exist for a release. (R9)

11. Given a copy of ITS/SLCs and associated Bases, analyze a given set of plant conditions for applicable TS/SLC LCOs. (R11)

12. Apply all TS/SLC rules to determine applicable Conditions and Required Actions for a given set of plant conditions. (R12)

13. Compute the maximum Completion Time allowed for all applicable Required Actions to ensure compliance with TS/SLCs. (R13)

3. Equipment Hatch Replacement
   a) Secure the running Main Purge Fan.
   b) Red tag open the following breakers:
      - Main Purge Fan breaker
      - Mini Purge Fan breaker
   c) Grant permission to replace the Equipment Hatch.
   d) When the Equipment Hatch is in place, remove red tags on the Main and Mini Purge Fan breakers.
   e) Rack in the breaker on the Reactor Building Main Purge Fan.
   9 If desired, continue purge of the Reactor Building under the existing GWR and notify RP.

2.3 Abnormal Operations

A. (Obj. R7) Engineered Safeguards Qperation

1. The R.B. Purge Isolation Valves must be operable under the most severe design-basis-accident (DBA) flow-condition loading and these valves must close within their design time limit under these conditions.
   a) By meeting their operability requirements under these conditions adverse amounts of radiation will not escape the containment building, following an accident.
2. Non-essential Containment Isolation Valves must actuate immediately following any size LOCA.
   a) To achieve this actuation, low reactor coolant system pressure of 1600 psig is used as the initiating signal to actuate E.S. digital channels 1 and 2.
   b) A diverse signal will also actuate these channels. This signal is a High Reactor Building Pressure of 3 psig.
3. The R.B. Purge Isolation Valves are non-essential containment isolation valves and receive signals to isolate as follows:

Valve	Channel
PR-1	ES-1
PR-2	ES-2
PR-3	ES-2
PR-4	ES-2
PR-5	ES-2
PR-6	ES-1

- **NOTE:** PR-1 through 6 are "sealed **closed"** per ITS **3.6.3 prior** to entering **MODE** 4 from **MODE** 5.

B. (Obj. R5) Unit Vent Radiation Effluent - High

1. RIA-45 monitors the unit vent noble gas effluent.

   a) If unit vent activity exceeds allowable release limits, RIA-45 initiates a signal to close PR-2 through PR-5, and trips the Main and Mini Purge Fans.

2. RIA-46 monitors the unit vent High Gas.

   a) RIA-46 will now perfom the same interlocks that RIA-45 perfom. This provides a backup function in case of a failure of RIA45 **HIGH alarm.** Refer to Lesson Plan OP-OC-RAD-RIA for more information.

3. If the RB Purge Fan or PR-2 through 5 are closed by the RIAs reaching the HIGH alarm, the operator must "manually" restart the fan and cycle the control room switches to re-open PR-2 through 5 once the RIA alarm clears.

2.4 (Obj. R4) Reactor Building Purge Interlocks

A. Main Purge Fan

- The following interlocks must be satisfied to allow the Purge Fan to start and they will trip the Purge Fan during operation if they are not satisfied:

1. RIA-45 and RIA-46 must be reading **less** than HIGH setpoint. This allows PR-2, 3, 4, and 5 to be opened.
2. PR-1 through PR-6 must be open
3. Inlet and outlet dampers of purge fan must be open

   - **NOTE:** These dampers receive an open signal when the Main **Purge** Fan is selected to the START position; therefore, a **20-**second time delay **is built into** the start circuit to allow these dampers time to **OPEN.**

4. Vacuum on the suction piping must be less than 9 inches of water vacuum.

   a) This interlock prevents running the purge fan with inlet dampers shut, which would draw a large vacuum on the inlet duct and collapse it.

B. Mini Purge Fan

- The Main Purge Fan, if started, will trip the Mini Purge Fan.

C. Spent Fuel Pool Ventilation Exhaust Fan

- The Main Purge Fan, if started, will trip the SFP Ventilation Exhaust Fan (Units 2 and 3 only). Mini Purge fans are **NOT** interlocked with the SFP Ventilation Exhaust **Fans.**

1 POINT

Question 57

Plant conditions:

- SFP Skimmer operating
- Unit 1 BWST in Recirc (purification)

Per 1104/006A (SFP and BWST Purification), which ONE of the following is correct?

Makeup to 1&2 Spent Fuel Pool _____ allowed _____.

A. is / provided SFP level is > + 0.2 feet

B. is / provided only one SFP pump in operation

C. is NOT / to prevent BWST overflow

D. is NOT / to prevent cavitation of the SFP pumps

open valve
detrain

Question 57
T2/G2

033K1.05, Spent Fuel-Pool Cooling System
Knowledge of the physical connections andlor cause-effect relationships between the Spent Fuel Pool Cooling System and the following systems: RWST
(2.7*/2.8*)

Answer: C

A. Incorrect, first part incorrect. Makeup to the SFP is not allowed when the BWST is in recirc to prevent BWST overflow. Second part incorrect. If 2 SF Cooling Pumps are operating, SFP level should be ≥ +0.2 ft.

B. Incorrect, first part incorrect. Makeup to the SFP is not allowed when the BWST is in recirc to prevent BWST overflow. Second part incorrect. If 1 SF Cooling Pump is operating SFP level should be ≥ +0 1 ft.

C. Correct, makeup to the SFP is not allowed when the BWST is in recirc to prevent BWST overflow. If 1 SF Cooling Pump is operating, SFP level should be ≥ +0.1 ft.

D. Incorrect, first part correct. Makeup to the SFP is not allowed when the BWST is in recirc to prevent BWST overflow. Second part incorrect. Cavitation of SFP pumps is during skimmer operation.

Technical Reference(s): **OP/1&2/A/1104/06A** (SFP and BWST Purification)

Proposed references to be provided to applicants during examination: None

Learning Objective: FH-SFC, R10

Question Source: NEW

Question History: Last NRC Exam _____

Question Cognitive Level: Memo9 or Fundamental Knowledge
Comprehension or Analysis

10. Discuss the Limits and Precautions of OP/1&2/A/1104/06, Spent Fuel Cooling System. (R10)

10.1 The precaution related to preventing BWST overflow.

20.2 The reason for the special precaution related to valving the "cold" and "hot" fluids in and out very slowly for the "C" Spent Fuel Coolers.

10.3 The reason for maintaining specified spent fuel pool level, boron concentration and temperature

11. Briefly describe the Spent Fuel Cooling System flowpath including all major valves and components for the following modes of operation: (R11)

11.1 Normal operation

11.2 Refueling operation

11.3 Testing of SFC Pumps

12. Given a copy of PT/1&2, 3/A/0251/002, Spent Fuel Cooling Pump Test, and a set of data, determine if acceptance criteria is being met. (R21)

13. Explain why SF-90 should be throttled if the "C" SF Cooling System Pump is to be started. (R12)

14. Describe the effect of changes in Reactor Building pressure on Spent Fuel Pool Level. (R13)

15. State the purpose for the skimmer associated with the SF Pool. (R14)

16. Given a set of conditions and the appropriate enclosure(s), calculate the time required for boiling to occur in the SFP. (R16)

17. Describe the relationship between Spent Fuel Pool Level and Temperature, and SSF RCMU System operability. (R17)

18. Given a set of conditions and the appropriate enclosure(s), determine the required Spent Fuel Pool level. (R18)

19. Given a set of conditions and the appropriate enclosure(s), determine SSF RCMU System operability. (R19)

20. Evaluate the overall affect on plant operations from the loss of various components in the Spent Fuel Cooling System. (R20)

2.4 (**Obj. R10**) Selected Limits and Precautions compiled from the OP/1104/006 series of procedures.

A. **To** prevent **BWST** overflow:

1. **Do not** makeup to the SFP, Unit 1 **BWST** or Unit **2 BWST** with a **BWST** in recirc.
2. Do not drain the Fuel Transfer Canal to the BWST with a BWST in purification.

B. SFP level should be maintained 2 - 2.0' to meet TS 3.7.1 1 requirements.

C. Do not operate two Spent Fuel Cooling Pumps through one cooler.

D. Maintain cooling Row between 800 and 1000 GPM for single-pump operation. For A and B pump opetation, maintain SF flow between 1600 and 2000 GPM. Minimum flow for the SF Pumps is 250 GPM. Operating < 250 gpm for > 10 minutes may cause pump damage.

E. Required **SFP** level for Skimmer operation depends on number of **SF** Cooling pumps operating. These guides prevent air from causing cavitation of **SF** Cooling Pumps.

- **SFP** Skimmer should be **OOS** if the SFP level < 0' or 3 **SF** Cooling Pumps are operating.
- If 2 **SF** Cooling Pumps are operating SFP level should be **≥ +0.2 ft.**
- If 1 **SF** Cooling Pumps is operating SFP level should be **≥ +0.1 ft.**

F. The SFP boron concentration will be maintained within the range 2250 - 2950 ppm.

This specified boron concentration ensures that *the minimum* boron *concentration* required by the Core Operating ***Limits*** Report *(COLR)* is met.

G. If SFP level alarms inoperable or locked in:

- SFP level indication should be monitored once per hour
- SFP level indication should be monitored continuously during alignment changes

H. If SFP level indication inoperable:

- SFP level should be checked locally once per hour
- SFP level should be continuously monitored locally during alignment changes

I. When isolating SF Cooler "C", both fluids (RCW and SF) should be slowly isolated at the same time. Alternately isolate the hot fluid (SF) first.

This prevents pressure surges, which could damage cooler gaskets)

J. When returning the SF Cooler "C" to service after isolation, slowly open both inlet valves at the same time. Alternately, the cold fluid (RCW) should be introduced first, then the hot fluid (SF). Some leakage from the cooler is expected until full flow, temperature, and pressure are reached.

1 POINT

Question 58

Given the following:

- Unit shutdown in progress with the ICS in the Integrated Mode
- Core Thermal Power at 17% decreasing
- Turbine Master in "auto" attempting to control THP
- TBVs in "auto"

If SG outlet pressure increases 25 psi above setpoint which ONE of the following will cause the TBVs to immediately OPEN and LOWER SG pressure to setpoint?

A. Reactor Master is placed in WAND.

B. Turbine Master is placed to HAND.

C. Turbine UNLOAD button depressed.

D. Turbine LOAD button depressed.

Question **58**
T2/G2
035K4.06, Steam Generator System
Knowledge of S/GS design feature(s) andlor interlock(s) which provide for the following: *S/G* pressure (3.1/3.4)

Answer: C

A. Incorrect, no effect on TBVs or Turbine Load Status flag.

B. Incorrect, will shift only the controlling signal from THP error to SG outlet pressure error but Turbine Load Status flag remains TRUE and TBV bias shift doesn't occur.

C. Correct, UNLOAD button will set Turbine Load Status flag to FALSE removing the 50# bias from TBV control and the TBVs will control at setpoint causing them to open to lower steam pressure.

D. Incorrect, turbine already loaded or it would not be attempting to respond to the high pressure. This means that the TBVs are in overpressure protection mode with 50# bias and will not open.

Technical Reference(s):

Proposed references to be provided to applicants during examination: **None**

Learning Objective: **STG-ICS, R10**

Question Source: **Bank # STG121002**

Question History: bast NRC Exam _____

Question Cognitive Level: Memory or Fundamental Knowledge
Comprehension or Analysis

9. Identify the conditions that would shift the Turbine Master to "hand" and those exceptions *that* would defeat the shift. (R9)

10. Identify the functions of the Turbine Bypass Valves in terms of the following: (R10)

    10.1 Setpoint control

    10.2 Setpoint bias application

    10.3 Independent overpressure protection

    10.4 Control interlocks

11. Describe the operation and limitations of the Turbine Load and Unload circuit. (R11)

12. List the inputs that affect total FDW demand and identify when each is utilized. (R12)

13. Identify the conditions that will remove the control deadband from Tave error to the feedwater subsystem. (R13)

14. Explain why feedwater temperature modification to feedwater demand is necessary and the effects it has on plant efficiency. (R14)

15. Describe how loop deedwater demands are generated and the factors (Loop Tcold ratio and RC Flow ratio) which affect the balance between the two demand signals. (R15)

16. List the conditions that block the temperature initiated delta Tc modification. (R16)

17. Identify the purpose and operation of the SG high and low level limits circuits including actuating conditions and Operator over-ride capabilities. (R17)

18. Given a set of conditions, identify the position response of the following: (R18)

    18.1 Main FDW Control Valves

    18.2 Main FDW Block Valves

    18.3 Startup Control Valves

19. Explain how a feedwater runback is accomplished in the FDW subsystem if some or all of the control stations are in hand. (R19)

20. Describe how ICS feedwater pump speed signal is processed from FDW loop demands and valve differential pressure. (R20)

21. Explain how the FDW valve delta P auctioneering circuitry can prevent a unit transient for any single delta P signal failure. (R21)

Question 228 STG121002 STG121002
Given the following:

- Unit shutdown in progress with the ICS in the Integrated Mode
- Core Thermal Power at 17% decreasing
- Turbine Master in "auto" attempting to control THP
- TBVs in "auto"

If SG outlet pressure increases 25 psi above setpoint which ONE of the following will cause the TBVs to immediately OPEN and LOWER SG pressure to setpoint? (.25)

A. Reactor Master is placed in HAND.

B. Turbine Master is placed to HAND.

C. Turbine UNLOAD button depressed.

D. Turbine LOAD button depressed.

Answer 228
C

A. Incorrect: No effect on TBVs or Turbine Load Status flag.

B. Incorrect: Will shift only the controlling signal from THP error to SG outlet pressure error but Turbine Load Status flag remains TRUE and TBV bias shift doesn't occur.

C. Correct: UNLOAD button will set Turbine Load Status flag to FALSE removing the 50# bias from TBV control and the TBVs will control at setpoint causing them to open to lower steam pressure.

D. Incorrect: Turbine already loaded or it would not be attempting to respond to the high pressure. This means that the TBVs are in overpressure protection mode with 50# bias and will not open.

1 POINT

Question 59

Unit 1 plant conditions:

INITIAL CONDITIONS:
- Reactor power = 100%

CURRENT CONDITIONS:
- Turbine trip
- Reactor trip
- "Trip Confirm" signal NOT generated by the Diamond

Which ONE of the following **is** correct?

Turbine Load Status flag is _____ and the **TBVs** will control **at** _____

A. true / setpoint

B. true / setpoint + 125 psig

C. false / setpoint

D. false / setpoint + 125 psig

Question 59

Q41K6.03, Steam Bump System (SDS) and Turbine Bypass Control
Knowledge of the effect of a loss or malfunction on the following will have on the SDS: Controller and positioners, including ICS, S/G, CRDS (2.7/2.9)

Answer: C

A. Incorrect, first part incorrect. The turbine LOAD status flag is always fake below 10% CTPD. Second part is incorrect. It would be correct if the "trip confirm" signal had been generated.

B. Incorrect, first part incorrect. The turbine LOAD status flag is always false below 10% CTPD. Second part correct. Turbine Header Pressure control after a reactor trip at setpoint +125 psig when the Diamond control system receives a "trip confirm" signal from control rod drive breakers opening. Since the "Trip Confirm" signal was not generated the TBVs will control at setpoint because the Turbine Load Status flag is false.

C. Correct, the turbine LQAD status flag is always false below 10% CTPD. Turbine Header Pressure control after a reactor trip at setpoint +125 psig when the Diamond control system receives a "trip confirm" signal from control rod drive breakers opening. Since the "Trip Confirm" signal was not generated the TBVs will control at setpoint because the Turbine Load Status flag is false.

D. incorrect, first part correct. The turbine LOAD status flag is always false below 10% CTPD. Second part is incorrect. It would be correct if the "trip confirm" signal had been generated.

Technical Reference(s):

Proposed references to be provided to applicants during examination: None

Learning Objective: STG-ICS, R10; IC-CRI, R10

Question Source: NEW

Question History: bast NRC Exam _____

Question Cognitive Level: Memo9 or Fundamental Knowledge
Comprehension or Analysis

9. Identify the conditions that would shift the Turbine Master to "hand" and those exceptions that would defeat the shift. (R9)

10. Identify the functions of the Turbine Bypass Valves in terms of the following: (R10)

    10.1 Setpoint control

    10.2 Setpoint bias application

    10.3 Independent overpressure protection

    10.4 Control interlocks

11. Describe the operation and limitations of the Turbine Load and Unload circuit. (R11)

12. List the inputs that affect total FDW demand and identify when each is utilized. (R12)

13. Identify the conditions that will remove the control deadband from Tave error to the feedwater subsystem. (R13)

14. Explain why feedwater temperature modification to feedwater demand is necessary and the effects it has on plant efficiency. (R14)

15. Describe how loop feedwater demands are generated and the factors (Loop Tcold ratio and RC Flow ratio) which affect the balance between the two demand signals. (R15)

46. kist the conditions that block the temperature initiated delta Tc modification. (R16)

17. Identify the purpose and operation of the SG high and low level limits circuits including actuating conditions and Operator aver-ride capabilities. (R17)

18. Given a set of conditions, identify the position response of the following: (R18)

    18.1 Main FDW Control Valves

    18.2 Main FDW Block Valves

    18.3 Startup Control Valves

19. Explain how a feedwater runback is accomplished in the FDW subsystem if some or all of the control stations are in hand. (R19)

20. Describe how ICS feedwater pump speed signal is processed from FDW loop demands and valve differential pressure. (R20)

21. Explain how the FDW valve delta P auctioneering circuitry can prevent a unit transient for any single delta P signal failure. (R21)

9. Identify the conditions that will actuate an asymmetric alarm andlor fault. (R8)

10. Given a set of conditions, determine if an automatic asymmetric runback will occur including how the operator will verify proper runback response. (R9)

11. Concerning AP/1700/15, Dropped or Misaligned Control Rods be able to: (R25)

    11.1 State the Entry Conditions, Immediate Manual Actions, and Contingency Actions in the AP.

    112 Explain the basis for limits, cautions, notes and major steps in the AP

    11.3 Based on plant data received, summarize proper operator actions and strategies required in the AP to mitigate the abnormal plant condition.

    11.4 Describe general system alignments, available operator controls and instrumentation both inside and outside the control room.

    1 ▮5 Provide proper directions to operators and supporting groups performing actions of the AP outside the control room.

12. Concerning the CRD Diamond control panel, identify the conditions that will actuate and the resultant control actions for the following circuits: (R10)

    12.1 Trip Confirm

    12.2 Out inhibit

    12.3 Sequence Inhibit

    12.4 Auto inhibit

    12.5 Out Limit

    12.6 In Limit

13. Explain the operation of the "Safety Rods Out" relays including: (R12)

    13.1 Function of the K-39 relay (Safety Rods Out Bypass) including manual and automatic relay energizing.

    13.2 Function of the K-39A relay (Safety Rods Out)

14. Discuss the purpose and operational characteristics of the following pushbuttons and switches associated with the CRD Diamond Control Panel: (R13)

    14.1 In Limit Bypass Pushbutton/Indicator (Latch).

    14.2 Transfer Reset Pushbutton/Indicator

    14.3 Fault Reset Pushbutton/Indicator

    14.4 Trip Reset Pushbutton/Indicator

26 Diamond Control Panel

REFER to OP-OC-CRI-8 & 8a

A. (Obj. R10) Lamps and Their Functions

1. Trip Confirm Lamp

a) The proper Combination of CRD Breakers are tripped to initiate a reactor trip and insert ALL CRAs.

- AC Breakers A (Assembly 10) and B (Assembly 11)
- CB1, CB2 and the E electrical trip (contactor)
- CB3, C84 and the F electrical trip (contactor)

b) Trip confirm sends signals to:

1) Trip Turbine

2) Shift Turbine Bypass Valve Setpoint

2. Asymmetric Rod Fault

a) Indicates that one or more rods within a particular group are more than 9 inches out of alignment with the group average. (API indication)

b) If the Reactor is above 60% power an asymmetric runback will occur provided the logic is satisfied.

3. Out Inhibit

a) Indicates that the control rods will net respond to an out command.

b) Actuates if:

1) Safety rods not at the out limit and Diamond in "Auto"

2) Asymmetric fault (> 9"), power level > 60%, and Diamond in "Auto".

3) High startup rate is experienced at 2 DPM as measured by the Wide Range" Nis. (Active at all times) – Even w/ Diamond in Manual

c) Will cause the CRD Out Inhibit statalarm, 1SA2/D9.

4. Sequence Inhibit

a) A Sequence Inhibit lamp on the Diamond panel and Sequence Fault statalarm (1SA1/E1) indicates that the regulating groups are not being or cannot be withdrawn in sequence. (proper overlap not being maintained)

1 POINT

Question 60

Unit 3 plant conditions:

- Reactor trip occurred
- **OATC** is performing **IMAs** and has depressed the TURBINE TRIP pushbutton
- Main Steam Stop Valve positions indicate "OPEN"
- Generator Output breakers (PCB-58 & **59**) indicate "CLOSED"

Which ONE of the following is required by the OATC at this time? IAW IMAs

A. Open BOTH generator output breakers.

5. Place the operating EHC pump to the OFF position.

C. Place the EHC pumps control switches to the PULL-TO-LOCK position.

D. Send an operator to PULL the local turbine trip lever at the front standard.

ON Initial 2003 RO Exam

Question 60
T2/G2

045A2.17, Main Turbine Generator
Ability to (a) predict the impacts of the following malfunctions or operation on the MT/G system; and (b) based on those predictions, use procedures to correct, control, or mitigate the consequences of those malfunctions or operations: Malfunction of electrohydraulic control (2.7*/2.9*)

Answer: C

A. Incorrect, PCBs are not opened during the performance of IMAs.

B. Incorrect, this would only start the automatic pump and the **MSSVs** would remain open.

C. Correct, this action secures both EHC pumps and allows the MSSV to close

D. Incorrect, this would be a method to locally trip the turbine if C did not work but, is operator knowledge and not part of IMA's.

Technical Reference(s): **EQF IMAs**

Proposed references to be provided to applicants during examination: **None**

Learning Objective: **EAF-SA, R2**

Question Source: **Bank # EAP050201**

Question History: Last NRC Exam _____

Question Cognitive Level: Memory or Fundamental Knowledge
Comprehension or Analysis

OBJECTIVES

TERMINAL OBJECTIVES

1. Be able to describe how to properly perform or verify each step in immediate Manual Actions and Subsequent Actions of the EOP.

2. Be able to explain the bases behind specified steps contained in Immediate Manual Actions and Subsequent Actions, of the EOP.

ENABLING OBJECTIVES

1. State the initiating events or entry conditions which the EOP is designed to provide the guidance for placing and maintaining the reactor in a safe condition following that event, i.e., the purpose of the EQP (R21)

2. Be familiar with the Automatic Systems Actions listed in the EOP. (R23)

3. Recognize that the Immediate Manual Actions and Symptom Checks of the EOP shall be performed from memory and be able to state these actions. (R24)

4. Given a set of conditions be able to determine: (R1)

   4.1 If the reactor is properly shutdown

   4.2 Operator actions to be taken if reactor power is > 5%

   4.3 Operator actions to be taken if a stuck rod has occurred

   4.4 When RCS boration from the BWST can be secured when the reactor was not properly shutdown

5. **Describe the following: (R2)**

   5.1 Operator action to trip the Main Turbine and how to determine the Main Turbine has actually tripped.

   5.2 How to remove the Main Turbine from operation if all the stop valves don't close upon trip actuation

   5.3 The significance of ensuring that the Main Turbine and Generator trips for "Normal" post trip mitigation of a reactor trip

6. Given a set of conditions determine if ICS is properly controlling Main FDW following a reactor trip. (R4)

7. Explain why the flow rate to establish the usual post trip SG level setpoint for natural circ. could be too high, what indications would alert the operator to this condition; and for given plant conditions explain the proper actions that should be taken. **(R6)**

Question 84 EAP050201 EAP050201

Unit 3 plant conditions:

- Reactor trip occurred
- OATC is performing IMAs and has depressed the TURBINE **TRIP** pushbutton
- Main Steam Stop Valve positions indicate "OPEN"
- Generator Output breakers (PCB-58 & 59) indicate "CLOSED

Which ONE of the following is required by the OATC at this time? (.25)

A) Open BOTH generator output breakers.

B) Place the operating EHC pump to the OFF position

C) Place the EHC pumps control switches to the PULL-TO-LOCK position.

D) Send an operator to PULL the local turbine trip lever at the front standard.

Answer 84

C

A. Incorrect - **PCBs** are not opened during the performance of IMAs.

B. Incorrect - This would only start the automatic pump and the MSSVs would remain open.

C. Correct - This action secures both EHC pumps and allows the MSSV to close

D. Incorrect - This would be a method to locally trip the turbine if C did not work but, is operator knowledge and not part of IMA's.

1 POINT

Question 61

Unit 3 plant conditions:

INITIAL CONDITIONS:
- Reactor power = 100%
- 3RIA-40 = 2874 cpm

CURRENT CONDITIONS:
- Reactor power = 92% and decreasing
- 3RIA-40 = 354,874 cpm and slowly increasing

Per OP/3/A/1106/016, Condenser Vacuum System, Limit and Precaution; which ONE of the following describes the required position of 3V-196 (CSAE Exhaust to Stack Drain) and why?

3V-196 is locked _____ to prevent _____

A. CLOSED / a vacuum leak

B. CLOSED / a release of activity

C. OPEN / losing a loop seal

D. OPEN / decreasing CSAE efficiency

Look

Question 61

T2/G2.1.

056G2.1.32, Condenser Air Removal System
Ability to explain and apply all system limits and precautions. (3.4/3.8)

7

Answer: B

A. Incorrect, first part correct. Second part incorrect. V-296 should be LOCKED CLOSED to prevent release of activity to the basement trench.

B. Correct, when secondary activity increases V-196 should be LOCKED CLOSED to prevent release of activity to the basement trench.

C. Incorrect, both parts incorrect. When secondary activity increases V-196 should be LOCKED CLOSED to prevent release of activity to the basement trench. A loop seal is maintained between the CSAEs and the main condenser.

D. Incorrect, both parts incorrect. When secondary activity increases V-196 should be LOCKED CLOSED to prevent release of activity to the basement trench. Water does need to be drained from the air ejectors to maintain efficiency but it is not done with this drain.

Technical Reference(s):

Proposed references to be provided to applicants during examination: **None**

Learning Objective: **STG-CVS, R6**

Question Source: **Bank # STG050601 (modified)**

Question History: Last NRC Exam _____

Question Cognitive bevel: **Memory or Fundamental Knowledge**
Comprehension or Analysis

Discussed *KA with* George Hooper *on* 3/1/2004. He instructed me *to* randomly pick *an* applicable *G2.1 KA not already* used. *KA* G2.1.32 was picked.

TRAINING OBJECTIVES continued

4.8 Explain the purpose of the Vacuum Breaker.

4.9 Describe the method for startup of the Air Ejectors.

5. Describe the three main causes of Inadequate Vacuum. (R5)

6. **Describe the requirement for valve (1)(2)(3) V-196 (CSAE Exhaust to Stack Brain) if activity above background exists on the OTSG secondary side. (R6)**

7. Explain the three precautions, which must be considered prior to using butterfly valves as isolation valves in the Vacuum System. (R7)

8. **Explain** the basis of the Critical Action Steps of the following NLO JPMs associated with the Condenser Vacuum System: (R8)

   NLQ-32, "Align the Vacuum Pumps to a Unit's Vacuum System"

Question 76 STG050601 STG050601

Unit 3 plant conditions:

INITIAL CONDITIONS:
- Reactor power = 100%
- 3RIA-40 = 2874 cpm

CURRENT CONDITIONS:
- Reactor power = 92% and decreasing
- 3RIA-40 = 354,874 cpm and slowly increasing

Per OP/3/A/1106/016, Condenser Vacuum System, Limit and Precaution; which ONE of the following describes the required position of 3V-196 (CSAE Exhaust to Stack Drain)? (.25)

A) OPEN

B) Locked OPEN

C) CLOSED

D) Locked CLOSED

Answer *76*
D

D. Correct - When secondary activity increases V-196 should be LOCKED CLOSED to prevent release of activity to the basement trench.

1 POINT

Question 62

The dose rate in Sluice Pump room is at the upper limit for an area posted **as** a High Radiation Area.

Which ONE of the following is the MAXIMUM exposure an operator should receive if he/she works in Sluice Bump room for 30 minutes?

A. 50 mrem

B. 500 mrem

C. 1000 mrem

D. 250 rad

Question 62
T2/G2

068K5.03, Liquid Radwaste System
Knowledge of the operational implication of the following concepts as they apply to the Liquid Radwaste System: Units of radiation, dose, and dose rate (2.6/2.6)

Answer: B

A. Incorrect, correct for a radiation area.

B. Correct, maximum dose in a high radiation area would be 1000 mrem/hour. Stay time of 30 minutes would result in 1000 mrem X .5 hr = 500 mrem

C. Incorrect, correct for high radiation area for 1 hour.

D. Incorrect, correct for extra high radiation area.

Technical Reference(s):

Proposed references to be provided to applicants during examination: **None**

Learning Objective: **RAD-RPP, R8**

Question Source: **Bank # RAD020802**

Question History: Last NRC Exam _____

Question Cognitive Level: Memory or Fundamental Knowledge
Comprehension or Analysis

3. Define the following dose terms and discuss how use each can be used to determine if an individual is controlling his dose within applicable limits. (R25)

   3.1 Dose Equivalent

   3.2 Deep-dose Equivalent

   3.3 Shallow-dose Equivalent

   3.4 Eye-dose Equivalent

   3.5 Committed Dose Equivalent

   3.6 Total Effective Dose Equivalent

   3.7 Annual Limit on Intake (ALI)

   3.8 Derived Air Concentrations (DAC)

4. State the Annual Limit on exposure for Total Effective Dose, Eye Dose Equivalent, Shallow Dose Equivalent, minors, and declared pregnant women, as established by the NRC; state both the basic and maximum administrative limits for each, as established by Duke Power Company. (R3)

5. State the approval requirements for an individual at Duke Power Company to exceed the basic permissible exposure limit of 2.0 rem. (R4)

6. State the special dose limits established for the general public. (R5)

7. Describe the special dose control measures used to protect the fetus of a "declared" pregnant radiation worker. (R6)

8. Recognize that in "exceptional situations", it is possible to allow an adult radiation worker to receive additional exposure, apart from normal occupational exposure. **(R7)**

9. **Define and describe the specific site area for each of the following terms relating to the control do station areas: (R8)**

   9.1 Unrestricted Area

   9.2 Restricted Area

   9.3 Owner Controlled Area

   9.4 Radiation Control Area (RCA)

   9.5 Radiation Control Zone (RCZ)

   9.6 Radiation Area (RA)

   9.7 High Radiation Area (HRA)

   9.8 Extra High Radiation Area (EHRA)

9.9 Very High Radiation Area (VHRA)

9.10 Airborne Radioactivity Area

9.11 Hot spot

9.12 Significant Dose Contributor

9.13 Low Exposure waiting Area

9.14 Contaminated Area

10. Describe each of the following: (R9)

18.4 Harshaw TLD badge

A. when it must be worn
B. how it should be worn
C. types of radiation dose measured
D. how it is read
E. how often it is changed out

10.2 Merlin Gerin Electronic Dosimeter (ED or ED)

A. when it must be worn
B. type of radiation dose measured
C. how/where it is issued and returned
D. how the audible dose and dose rate alarms are set and how they can be checked
E. how it is zeroed/turned on, and how one knows that it is on and operating correctly
F. Default settings when EDC system is down
G. How to respond to ED alarms

10.3 Self Reading Pocket bosimeter (SRD or PD)

A. when it would be worn

11. Explain the purpose of the Daily Exposure Time Record Card (DETRC or dosecard) and explain the proper use of it, including: (R10)

11.1 when the DETRC would be used in lieu of the EDC System

11.2 how to properly enter name on the card.

11.3 when entries must be made on the card.

11.4 what legal record the dosecard represents.

11.5 in what increments exposure is to be recorded on the dosecard.

G. **(Obj R8)** Radiation Area

Any area in which there exists radiation levels such that a major portion of the body could be exposed to > 5 **mrem/hour** (.005 rem/hour) at **30cm** *is,* by 10CFR20, a Radiation Area.

H. **(Obj R8)** High Radiation Area (HRA)

Any accessible area to individuals, in which radiation levels could result in an individual receiving a deep dose equivalent in excess of **100 mrem in one hour, but ≤ 1000 mrem in one hour,** at **30** cm from the radiation source.

I. **(Obj R8)** Extra High Radiation Area (EHRA)

1. An area where major portions of the body may be exposed to **> 1000 mrem/hr (@ 30 cm) but≤ 500 rads in an hour** at **1** meter.
2. Some EHRA's are located within large open areas, such as the RB's, where locked access or enclosures cannot be reasonably constructed. These EHRA's will be barricaded. posted as EHRA, and a yellow flashing Bight will be activated in lieu of being locked or guarded .

J. **(Obj R8)** Very High Radiation Area (VHRA)

1. An area accessible to individuals where they could receive a dose > 500 **rads in** one **hour at** one **meter.** (RADs, which are the units of absorbed dose, are used rather than rems, which are units of equivalent dose, when doses at very high dose rates are involved).

   NOTE: At very high doses received at high dose rates units **of** absorbed dose (rads) are appropriate, rather than units of dose equivalent (rems).

2. At Oconee, some probable VHRA's. depending on operating conditions, are:
   - the reactor annulus area
   - incore wire cage area
   - fuel transfer tube areas

K. Entry Requirements for HRA's, EHRA's, and VHRA's

1. At one time, all HRA's were maintained locked, with special entry requirements and key controls. With the new EBC System and alarming ED's, HRA's are no longer required to be maintained locked. Entry into HRA's are controlled per the RWP.
2. Personnel requiring access to EHRA's and VHRA's **must** contact RP for permission, and so that RP can provide **continuous** coverage for the entry.
3. In addition to general RP permission, entries into VHRA's requires the approval of the RP Manager.

Question 30 RAD020802 RAD020802

The dose rate in Unit 3's East Penetration Koom is at the limit for an area posted as a Radiation Area.

Which **ONE** of the following is the MAXIMUM exposure (mrem) an operator should receive if he/she works in Unit 3's East Penetration Room for 30 minutes? (.25)

A) 50

5) 100

C) 500

D) 1000

Answer 30
A

A. Correct, maximum dose in a radiation area would be 100 mrem/hour. Stay time of 30 minutes would result in 100mrem X .5 hr = 50 mrem
B. Incorrect, correct for one hour.
C. Incorrect, correct for high radiation area
D. Incorrect, correct for high radiation area for one hour.

1 POINT

Question 63

Unit 1 conditions:

- Filling and Venting RCS, OP/1/A/103/002 in progress
- Encl. 4.7, "Raising RCS Loops and Initial RCS Vent" is in progress

Which ONE of the following specifically describes how the RCS *Hot* Legs are determined to be water solid?

A. All CRDs on the RV Head are vented

5. A solid stream of water is seen in the Hot Leg sight glasses

C. QT level increases >4" after each RCS High Point Vent is opened

D. 100 gallons of water is added per LPI procedure and pressurizer level increases >1 inch

Question 63
T2/G2

002K1.04, Reactor Coolant System
Knowledge of the physical connections and/or cause-effect relationships between the RCS and the following systems: RCS vent system (2.8/3.2)

Answer: C

A. Incorrect, this is performed but it doesn't conclusively prove that the hot legs are water solid.

B. Incorrect, sight glasses are not used to verify hot legs full during initial fill

C. Correct, after each High Point Vent valve is individually opened, the procedure calls for an observed level increase of >4" in QT level.

D. Incorrect, encl. "Verifying RCS Free Of Voids" verifies that the entire RCS is free of voids; also addition of 100 gal of water using the LPI procedure must verify that **PZR** level increases by >2".

Technical Reference(s):

Proposed references to be provided to applicants during examination: **None**

Learning Objective: **CP-FVP, RIO**

Question Source: **Bank # CP081001**

Question History: Last NRC Exam _____

Question Cognitive Level: **Memory or Fundamental Knowledge**
Comprehension or Analysis

8. Explain why nitrogen is added to the pressurizer after it has been filled during the RCS fill and vent process, and why 40 psig nitrogen pressure is maintained on the pressurizer until a steam bubble is formed. (R8)

9. Explain why the manual hot leg vents are used to vent the hot legs during RCS fill and vent rather than the electromatic high point vent valves. (R9)

10. State the proper disposition of the torque wrenches used for CRDM venting should venting not be completed before shift relief. (R11)

11. Describe the method used to vent the RCS Cold Leg piping. (R12)

12. Describe how to verify, during the RCS fill and vent process, that the RCS hot legs are full of water. (R10)

13. Discuss the purpose of the "Requirements to Form Pzr Steam Bubble" enclosure of the RCS Fill and Vent procedure. (R13)

14. Describe, briefly, what action should be taken by the NLO if, during CRDM venting, a knurled sleeve of a CRDM Quick Disconnect vent cap will not move when attempting to remove the top half of the Quick Connect Stem. (R14)

Question 85 CP081001 CP081001

Unit 1 conditions:

- Filling and Venting RCS, OP/1/A/103/002 in progress
- Encl. 4.7, "Raising RCS Loops and Initial RCS Vent" is in progress

Which ONE of the following specifically describes how the RCS Hot Legs are determined to be water solid? (.25)

A. All CRDs on the RV Head are vented

B. A solid stream of water is seen in the Hot Leg sight glasses

C. QT level increases >4" after each RCS High Point Vent is opened

D. 100 gallons of water is added per LPI procedure and pressurizer level increases >1 inch

Answer 85
C

A. Incorrect: This is performed but it doesn't conclusively prove that the hot legs are water solid.
B. Incorrect: Sight glasses are not used to verify hot legs full during initial fill.
C. Correct: After each High Point Vent valve is individually opened, the procedure calls for an observed level increase of >4" in QT level
D. Incorrect: Encl. Verifying RCS Free Of Voids" verifies that the entire RCS is free of voids; also addition of 100 gal of water using the LPI procedure must verify that PZR level increases by >2".

1 POINT

Question 64

Unit **1** plant conditions:

INITIAL CONDITIONS:
- ALL CRD Group 7 Rods **absolute** (API) position = 93.7% withdrawn
- CRD Group 7 Rod 6 **relative** (RPI) position = 93.6% withdrawn
- Position Select switch in Absolute

CURRENT CONDITIONS:
- CRD Group 7 Rod 6 **absolute** (API) position = 84.3% withdrawn
- CRD Group 7 Rod 6 **relative** (RPI) position = 93.6% withdrawn

Which ONE of the following is correct?

The OAC will indicate _____ withdrawn **for** CRD Group 7 Rod 6 and an Asymmetric Fault _____ occur.

A. 84.3% / will

B. 84.3% / will NOT

C. 93.6% / will

D. 93.6% / will NOT

Question 64
T2/G2

014K3.02, Rod Position Indication System (RPIS)
Knowledge of the effect that a loss or malfunction of the RPIS will have on the following: Plant computer (2.5/2.8*)

Answer: A

There *is a* "Position Select" switch which ***is*** used by the operator to select eifher the API signal or the *RPI* signal *to* be fed to:

- Position indication Panel
- Operator ***Aid*** computer

The Asymmetric *Fault* is *adjusted* for ***9*** inches deviation from the group. The *misaligned* rod is calculated in the group average as fed by *API. 740.2 ÷ 8 = 92.5 – 84.3 = 8.2%*
9" = 6%.(AP/15 (Dropped or Misaligned Control Rods) Entry *Conditions*

A. Correct, because the Position Select switch in the Absolute position the API position will be fed to the OAC. The red is misaligned 8.2% from the new group average. 6% is equal to a 9" misalignment. This will cause an Asymmetric Fault to occur.

B. Incorrect, first part correct. The Position Select switch in the Absolute position the API position will be fed to the OAC. Second part incorrect. The rod is misaligned 8.2% from the new group average. 6% is equal to a 9" misalignment. This will cause an Asymmetric Fault to occur.

C. Incorrect, first part incorrect. Would be correct **if** Relative selected. Second part correct. The rod is misaligned 8.2% from the new group average. 6% is equal to a 9" misalignment. This will cause an Asymmetric Fault to occur.

D. incorrect, first part incorrect. Would be correct **if** Relative selected. Second part incorrect. The rod is misaligned 8.2% from the new group average. 6% is equal to a 9" misalignment. Phis will cause an Asymmetric Fault to occur.

Technical Reference(s):

Proposed references to be provided to applicants during examination: **None**

Learning Objective: **IC-CRI, R6, 7, and 8**

Question Source: **NEW**

Question History: Last NRC Exam _____

Question Cognitive bevel: Memory or Fundamental Knowledge
Comprehension or Analysis

9. Identify the conditions that wili actuate an asymmetric alarm andlor fault. (R8)

10. Given a set of conditions, determine if an automatic asymmetric runback will occur including how the operator will verify proper runback response. (R9)

11. Concerning AP/1700/15, Dropped or Misaligned Control Rods be able to: (R25)

    11.1 State the Entry Conditions, Immediate Manual Actions, and Contingency Actions in the AP.

    11.2 Explain the basis for limits, cautions, notes and major steps in the AP

    11.3 Based on plant data received, summarize proper operator actions and strategies required in the AP to mitigate the abnormal plant condition.

    11.4 Describe general system alignments, available operator controls and instrumentation both inside and outside the control room.

    11.5 Provide proper directions to operators and supporting groups performing actions of the AP outside the control room.

12. Concerning the CRD Diamond control panel, identify the conditions that will actuate and the resultant control actions for the following circuits: (R10)

    12.1 Trip Confirm

    12.2 Out inhibit

    12.3 Sequence Inhibit

    12.4 Auto Inhibi?

    12.5 Out Limit

    12.6 In Limit

13. Explain the operation of the "Safety Rods Out" relays including: (R12)

    13.1 Function of the K-39 relay (Safety Rods Out Bypass) including manual and automatic relay energizing.

    13.2 Function of the K-39A relay (Safety Rods Out)

14. Discuss the purpose and operational characteristics of the following pushbuttons and switches associated with the CRD Diamond Control Panel: (R13)

    14.1 In Limit Bypass Pushbutton/Indicator (Latch).

    14.2 Transfer Reset Pushbutton/Indicator

    14.3 Fault Reset Pushbuttonllndicator

    14.4 Trip Reset Pushbuttonllndicator

OBJECTIVES

TERMINAL OBJECTIVE

Describe the operation of the Control Rod Drive Instrumentation System including Control Room Diamond Panel, PI Panel, and associated power supplies. Evaluate proper system operation in accordance with procedures and alarm response manual to ensure safe operation of the Control Rod Drive System.

ENABLING OBJECTIVES

1. Describe the purpose of the following rod groups associated with the Control Rod Drive system: (R1)

   1.1 Safety Groups 1 through 4.

   1.2 Regulating Groups 5 through 7.

   1.3 Axial Power Shaping Rods Group 8.

2. Describe basically how the sequential energizing of the six phases of a CRD stator results in movement of the control rod into or out of the reactor core. (R3)

3. Given a schematic of the CRD system power supply, identify the normal and alternate power supply paths for each Oconee unit including the purpose for the following: (R2)

   3.1 Source Interruption Device

   3.2 Auxiliary Power Supply

   3.3 Group (Regulating) Power Supply

   3.4 DC Hold Power Supply

4. Discuss the functions of the Silicon Controlled Rectifiers used in the Auxiliary and Group power supplies of the CRD system. (R4)

5. Explain the reason for a CRD to automatically step back from three stator mils energized to two stator coils energized if a CRD stops with three stators energized. (R5)

6. Given a combination of tripped CRD breakers, determine which groups of rods will be de-energized and if a reactor trip will occur. (R11)

7. Explain how each of the CRD Position Indication signals (Absolute and Relative) is derived. (R6)

8. Given an I&C output location or CRI circuit, identify whether the variable is fed by Absolute or Relative Position Indication. (R7)

1 POINT

Question 65

Unit 1 plant conditions:

INITIAL CONDITIONS:
- Reactor Power = 100%
- SASS is DEENERGIZED
- PZR LEVEL #2 selected on UB1

CURRENT CQNDITIONS:
- PZR TEMPEKATURE "A" indicates 120°F
- PZR TEMPERATURE "B" indicates 645°F

Which ONE of the following describes the effects on the ACTUAL RCS makeup flow and RCS volume?

	MAKEUP FLOW	ACTUAL PZR LEVEL
A.	Increases	Increases
B.	Decreases	Increases
C.	increases	Decreases
D.	Decreases	Decreases

Question 65

T2/G2

016K3.02, Non-nuclear Instrumentation System..
Knowledge of the effect of the loss or malfunction of the NNIS will have on the following: PZR level control system (3.4*/3.5*)

Answer: A

A. Correct - PZR Level #2 fed by Temp compensation RTD " A . As PZR temperature compensation fails low **this** decreases indicated PZR level. As indicated **PZR** level decreases an error between indicated controlling level vs. setpoint on HP-120 controller is developed causing HP-120 to open and try to raise level to setpoint. As HP-120 opens MAKEUP FLOW will increase causing **actual** PZR LEVEL RCS inventory to increase.

B. incorrect - First part of the distracter is incorrect; second part correct.

C. Incorrect - First part of the distracter is correct; second part incorrect.

D. incorrect - distractors are arranged in reverse from correct answer.

Technical Reference(s):

Proposed references to be provided to applicants during examination: None

Learning Objective: IC-RCI, R10, 22

Question Source: Bank # IC081301

Question History: Last NRC Exam Davis Besse 1995

Question Cognitive Level: Memory or Fundamental Knowledge
comprehension or Analysis

TRAINING OBJECTIVES

TERMINAL OBJECTIVES:

1. Describe how RCS temperature, pressure, level and flow measurement signals are generated, how these signals are processed, and how the indications and control functions are applied for unit operation. Be able to analyze various RCS indications and determine how changes in RCS temperature, pressure, level and flow measurement signals will affect plant control systems and operator indications. (T1, 2)

2. Describe the operation of the Reactor Vessel Level Indicating System (RVLIS) and Inadequate Core Cooling Monitor System (ICCM); how the signals used are generated, the various displays available to the operator, analyze when the indications are valid or invalid, and how to operate the system during all modes of unit operation. (T3, 4)

ENABLING OBJECTIVES

1. During all modes of operation, describe the basic operation and failure modes for the detectors used to generate control room indications for RCS temperature, pressure, level, and Blow, including the following: (R1)

   1.1 Instrument location in the RCS and range of the instrument

2. During all modes of operation, explain how the parameter controlling signal is derived via the ICS median select circuitry: (R61)

   2.1 Given a set of parameters analyze how failures of input signals to median select will affect plant operation.

3. During all operating modes when SASS is required explain the operation of SASS (Smart Automatic Signal Selector) system including the following: (R22)

   3.1 List the signals that are monitored by SASS. (R23)

   3.2 Differentiate SASS operation and response for an AUTO trip and a MISMATCH condition. (R24, 25, 26, 27, 28)

   3.3 Given a set of conditions with SASS in AUTO OR MANUAL, explain the operator indications and actions that are necessary to swap/reset the controlling signals. (R29, 30)

   3.4 During all modes of operation describe how the operator monitors proper SASS operation from the control room. (R31)

4. During all modes of operation, analyze proper operation of "Dixon" meters and differentiate between a loss of power, overranged, and underranged instrument (R21)

5. Given a set of conditions describe the required operator actions when selecting an alternate controlling signal. (R20)

6. Applying the knowledge of simplified instrumentation drawings be able to determine how various indications and control functions are processed for RCS temperature, pressure, level and Row including: (R2, 3, 62)

   6.1 Range of the indicator

   6.2 Source of the signal

7. **Given a set of conditions analyze proper operation of RCS TEMPERATURE indications that the operator uses to monitor and control unit operation including the following: (R3, 4, 5, 6, 10)**

   7.1 RCS T-hot

   7.2 RCS T-cold

   7.3 Core exit temperature (CETCs)

   7.4 **Pressurizer temperature**

8. Given a set of conditions analyze proper operation of RCS PRESSURE indications that the operator uses to monitor and control unit operation including the following: (R6, 7, 9, 63, 10)

   8.1 RCS Loops

   8.2 **ICCM** WR Pressure

   8.3 Low Range Cooldown

9. Given a set of conditions analyze proper operation of RCS LEVEL indications that the operator uses to monitor and control unit operation including the following: (R13, 15, 16, 17, 18)

   9.1 Pressurizer level and pressure

   9.2 Reactor Vessel (LT-5)

   9.3 Ultrasonic Level Indication (ULI)

   9.4 Tygon tubing

Question 165 IC081301 IC081301

Unit 1 plant conditions:

INITIAL CONDITIONS:
- Reactor Power = 180%
- SASS is DEENERGIZED
- PZR LEVEL #2 selected on UBI

CURRENT CONDITIONS:
- PZR TEMPERATURE "A" indicates 120°F
- PZR TEMPERATURE "B" indicates 645°F

Which ONE of the following describes the effects on the ACTUAL RCS makeup flow and RCS volume? (.25)

	MAKEUP FLOW	ACTUAL PZR LEVEL
A)	Increases	Increases
B)	Decreases	Increases
C)	Increases	Decreases
D)	Decreases	Decreases

Answer 165
A Ref: NRC DB95 (IC-RCI p21-23) Objective 10,11, and 13
A. Correct - PZR Level #2 fed by Temp compensation RTD "A" As PZR temperature compensation fails low this decreases indicated PZR level. As indicated PZR level decreases an error between indicated controlling level vs. setpoint on HP-120 controller is developed causing HP-120 to open and try
to raise level to setpoint. As HP-120 opens MAKEUP FLOW will increase causing actual PZR LEVEL RCS inventory to increase.
B. Incorrect - First part of the distracter is incorrect; second part correct.
C. incorrect - First part of the distracter is correct; second part incorrect.
D. Incorrect - distractors are arranged in reverse from correct answer.

1 POINT

Question **66**

Unit 1 Plant conditions:

- DATE 4/3/03 TIME: 1700
- Group 7 control rods have inserted through the Restricted Region and into the Unacceptable Region.

Which ONE of the following is correct?

A. Immediately enter LCO 3.0.3

B. Begin boration prior to 1715 on 4/3

C. Contact Reactor Engineering *to* determine SBM prior to 1800 on 4/3

D. Decrease power to ensure rods are in the acceptable region prior to 1900 on 4/3

Question 66
T3

G2.1.1 I, **Knowledge of less than one hour technical specification action statements for systems.** (3.0/3.8)

Answer: B

A. Incorrect, with the rods in the unacceptable region entering LCO 3.0.3 is not required.

B. Correct- with the rods entering the unacceptable region a boration has to be started to have the rods restored to the acceptable region within 15 minutes.

C. incorrect- with the rods in the unacceptable region the SDM *is not* acceptable. Reactor Engineering does not have to be contacted to determine this.

D. Incorrect- if power is decreased the rods will remain in the unacceptable region,

---

Technical Reference(s): **TS 3.1.1 (Shutdown Margin)**

Proposed references to be provided to applicants during examination: **None**

Learning Objective: **PNS-CRD, R12**

Question Source: **Bank # PNS081201**

Question History: bast NRC Exam _____

Question Cognitive Level: **Memory or Fundamental Knowledge**
Comprehension or **Analysis**

Discussed *KA* ***with*** **George Hooper on** ***3/1/2004.*** **He instructed** ***me to*** **randomly** ***pick*** **another applicable** ***G2.1*** *KA. KA* **G2.1.11 was selected.**

8. Given a copy of ITS/SLCs and associated Bases, analyze a given set of plant conditions for applicable ITS/SLC LCOs. (RIO)

9. Apply all ITS/SLC rules to determine applicable Conditions and Required Actions for a given set of plant conditions. (R11)

10. **Compute the maximum Completion Time allowed for all applicable Required Actions to ensure compliance with ITS/SLCs. (R12)**

Question 129 PNS081201 PNS081201

Unit 1 Plant conditions:

- **DATE 4/3/03** TIME: 1700
- Group 7 control rods have inserted through the Restricted Region and into the Unacceptable Region.

Which ONE of the following is correct? (.25)

SEE ATTACHMENT

A. Begin boration prior to 1715 on 4/3

B. Contact Reactor Engineering to determine SDM

C. Place the unit in MODE 3 within prior to 0500 hours on 414

D. Decrease power to ensure the rods enter the Restricted region

Answer 129
A
A. Correct- with the rods entering the unacceptable region a boration has to be started to have the rods restored to the acceptable region within 15 rninutes.
B. Incorrect- with the rods in the unacceptable region the SDM Is not acceptable. Reactor Engineering does not have to be contacted to determine this.
C. Incorrect- a unit shutdown is not required within 12 hours. 2 hours are allowed to restore the rods to an acceptable position.
D. Incorrect- if power is decreased the rods will remain in the unacceptable region, and a complete unit shutdown would occur.

1 POINT

Question 67

Which ONE of the following describes the purpose of the Emergency Power Switching Logic system?

A. Swap power back to CT-1 following a loss of the Standby Bus.

B. Prevent cycling of the startup breakers during a failure of a Keowee unit.

C. Ensure power to Engineered Safeguards equipment during a LOCA/LOOP.

D. Prevent overloading CT-4 or CT-5 while receiving power from the Standby Bus.

Question 67
T3
G2.1.27, **Knowledge of system purpose and or function.** (2.8/2.9)

Answer: C

A Incorrect, this is the purpose for re-transfer to Startup.

B. Incorrect, this is the purpose for the STAR relay.

C. Correct, EPSL ensures power to the Engineered Safeguards equipment during a LOCA/LOOP.

D. Incorrect, this is the purpose for Load Shed.

Technical Reference(s):

Proposed references to be provided to applicants during examination: **None**

Learning Objective: **EL-PSL, R15**

Question Source: **Bank # EL009**

Question History: Last NRC Exam _____

Question Cognitive Level: **Memory or Fundamental Knowledge**
Comprehension or Analysis

4. State the following about the Main Feeder Bus Monitor Panel Logic:

   4.1 Purpose (R11)

   4.2 Location of panel (R12)

   4.3 The conditions that will initiate a MFBMP signal. (R13)

   4.4 The events which will occur following a MFBMP actuation. (R14)

5. Concerning Emergency Power Switching Logic, state the following:

   5.1 Purpose (R15)

   5.2 Location of panel (R16)

6. Foe the Startup Breaker Anti-Recycle Relay, recall the following:

   6.f Purpose (R17) .

   6.2 The conditions that will generate a STAR relay signal. (R18)

   6.3 The events that will occur following a STAR relay actuation. (R19)

7. For the Transfer to Standby and Retransfer to Startup Logic, state the following: (R20)

   7.1 The conditions which will initiate a transfer to Standby operation.

   7.2 The conditions which will initiate a retransfer to stalaup operation.

8. Discuss the operation of the N and E breakers as they relate to power switching logic. (R28)

   8.1 Evaluate the response of the power system to N/E Auto/Manual selector switch being in the Manual position.

9. Discuss the operation of the SK breakers as they relate to power switching logic. (R21)

e) $27/B1_A$, $27B1_B$, $27B1_C$, ($27B2_A$, $27B2_B$, $27B2_C$)

1) Indicate under-voltage on associated bus.
2) Normally off
3) red lamps

2.5 Emergency Power Switching Logic (EPSL)

A. (Obj. **R15**) Purpose

1. Provide a reliable source of power to the Unit's Main Feeder Bus during a loss of power event concurrent with a LOCA.
2. During loss of coolant accidents, a concurrent loss of power would unnecessarily delay corrective actions if MFBMP actuation is required to recover power.
3. To prevent this, the EPSL will perform essentially the same functions as the MFBMP but without a 20 second delay. Even though EPSL does not send start signals to HPI & CC pumps directly, the load shed signal will cause the MFBMP to actuate which will.

B. Location

1. (Obj. **R16**) The Emergency Power Switching Logic panels are located in each Unit's Cable Room.

C. Single Failure criteria

The EPSL, which is installed for each Oconee unit, is a complex arrangement of Electro-mechanical relays which function during the design basis events to ensure the presence of 4KV essential auxiliary power at a particular time following event initiation. Compliance with the basic single failure criteria is ensured in the design of this system as follows.

1. Redundant Logic Channels

a) Two separate channels of logic for the EPSL system have been provided, the outputs of which are applied to various breaker control circuits to ensure correct functions of the 4KV Essential Auxiliary Power System following initiation of the various design basis events.

b) Outputs are such that if a complete channel or component fails, within the EPSL, energization of both main feeder busses is assured. This is accomplished by utilizing redundant and diverse components within the EPSL to generate subsequent breaker control and internal EPSL interlocking logic.

Question 6 EL009 EL009Which ON€ of the following is a purpose for having the Emergency Power Switching Logic? (.25)

A) Switch Emergency Power Sources to prevent a Reactor trip.

B) Guarantee power to the 6900 volt switchgear in case of a LOCA.

C) Emergency swap auxiliaries from I T to 1CT following a Turbine Generator Trip.

D) Ensure power to the Engineered Safeguards equipment following a loss of Normal and Startup sources during a **LOCA.**

Answer 6
D

1 POINT

Question 68

Which ONE of the following describes an acceptable method to ensure a "working copy" of a procedure **is** acceptable for use?

A Working Copy manually copied **from** the Control Copy may be used _____ and must be compared to the Control Copy every _____ days.

A. Immediately / 7

B. Immediately / 14

C. ONLY after verifying **it** is an exact copy of the Control Copy / 7

D. ONLY after verifying it is an exact copy of the Control Copy / **14**

Question 68
T3

G2.1.21, **Ability** to obtain and verify controlled procedure copy. (3.1/3.2)

Answer: D

A. Incorrect, first past incorrect. A Working Copy manually copied from the Control Copy may be not used immediately. It can only be used after verifying it is an exact copy of the Control Copy. Second part incorrect. The working copy must be compared to the Control Copy every 14 days. 7 days is correct for approval for minor procedure changes.

B. Incorrect, first part incorrect. A Working Copy manually copied from the Control Copy may be not used immediately. It can only be used after verifying it is an exact copy of the Control Copy. Second part correct.

C. Incorrect, first part correct. Second part incorrect. The working copy must be cornpared to the Control Copy every 14 days. 7 days is correct for approval for minor procedure changes.

D. Correct, a Working Copy manually copied from the Control Copy may be used ONLY after verifying it is an exact copy of the Control Copy and must be compared to the Control Copy every 14 days

---

Technical Reference(s): OMP 1-28 (Procedure Use and Adherence)

Proposed references to be provided to applicants during examination: None

Learning Objective: ADM-OMP, R4

Question Source: **NEW**

Question History: bast NRC Exam _____

Question Cognitive Level: Memory or Fundamental Knowledge
Comprehension or Analysis

2. Be able to recite, from memory, any required procedure or administrative items as detailed in OMP 1-18, Licensed Operator Memory Items Attachment (R1)

   2.1 The student is not required to be able to list each item in the attachment from memory.

   2.2 The student is expected to be able to recall from memory those actions or statements listed in the attachment as they relate to the specific task or evolution being performed.

3. When given a copy of the Operations Manual, or portions thereof, be able to demonstrate an understanding of the guidance or rules within specific OMP's by locating the answer to or interpreting required responses for a given situation. (R2)

4. The operator will become well versed in the requirements set forth in the following OMP's, in order to meet the expectations of Operations Management and conduct safe reliable operations of all Oconee units at all times. The operator will comprehend and exercise the OMP as it relates to the following conditions:

   4.1 OMP 1-2, Rules of Practice (R3)

   A. Acceptable means of operator conduct and operational practices.

   B. Limits for acceptable work schedules.

   C. Minimum shift staffing requirements.

   4.2 **OMP** 1-9, **Use of Procedures (R4)**

   A. Provide guidance to the operator in the following areas concerning procedures:

   - **establish *consistent* methods for** using **procedures**
   - **control of approved procedures**
   - **use of approved procedures**
   - **completion of procedures**
   - **control of procedure changes**
   - **deviation from approved procedures**

   4.3 OMP **1-12,** NRC License Maintenance (R27)

   A. Requirements for maintaining an active NRC license.

   B. Methods for restoring an inactive license to active status.

1 POINT

Question *69*

Unit 1 plant conditions:

- I A HPIP is OOS for motor bearing repair
- Maintenance has completed repairs
- A Tag Lift has been performed on the Breaker to check pump motor rotation (pump is uncoupled)
- Maintenance is ready to couple the pump and motor

Which ONE of the following is correct?

Prior to pump coupling, OPEN the breaker. The tag…

A. shall be cleared and reissued.

B. should be marked 'VOID', filed, and a new tag hung.

C. *may* remain lifted during the completion of the pump coupling.

D. shall be replaced on the breaker by the OCG.

Question 69
T3
G2.2.13, **Knowledge of tagging and clearance procedures.** (3.6/3.8)

Answer: D

A. Incorrect, NSB 500 allows for temporary removal of tags for testing for simple tasks (500.7.2.10).

B. Incorrect, Tag has been **used** and should NOT be voided.

C. Incorrect, Tag should be re-hung prior to continuing work.

D. Correct, NSD does allow TLFT, if documented on TLFT portion of tagging program.

Technical Reference(s): **NSD-500 (Red Tags/Configuration Control Tags)**

Proposed references to be provided to applicants during examination: **None**

Learning Objective: **ADM-SD, R9**

Question Source: **Bank # ADM060906**

Question History: Last NKC Exam _____

Question Cognitive Level: **Memory or Fundamental Knowledge**
Comprehension or Analysis

6. Referencing the following Nuclear System Directives (NSDs): (R4)
   - Discuss the purpose, Operations / individual responsibilities, and management expectations (where applicable).
   - Apply the guidance within the NSD to determine or interpret required responses for a given situation.

   6.1 NSD 202 (Reportability)

   6.2 NSD 203 (Operability)

   6.3 NSD 301 (Nuclear Station Modifications)

   A. Ops Superintendent responsibilities

   B. Determination of Minor Mod (Identification and Classification section)

   6.4 NSD 310 (Requirements for the Maintenance Rule)

   6.5 NSD 505 (Investigation of Reactor Trips or Significant Transients)

   6.6 NSD 703 (Administrative Instructions for Station Procedures)

7. Given a copy of WPM (Work Process Manual) 481, generate a work order to have problems with plant equipment corrected. (R7)

8. Per the Incident Investigation Process Manual, complete the required actions for a work related injury or non-injury incident. (R8)

9. **The operator will become <u>well versed</u> in the requirements in the following NSDs. The operator should comprehend and apply the NSD as needed. (R9)**

   9.1 NSD 500 (Safety Tags / Equipment Protection Tags)

   9.2 NSD 700 (Independent Verification)

10. The operator will become <u>well versed</u> in the requirements in the following NSDs. The operator should comprehend and apply the NSD as needed. (R10)

    10.1 NSD 304 (Reactivity Management)

    10.2 NSD 604 (Stop Work)

    10.3 NSD 704 (Technical Procedure Use and Adherence)

Question 110 ABM060906 ADM060906

Unit 1 plant conditions:

- 1A HPIP is **OOS** for motor bearing repair
- Maintenance has completed repairs
- A Tag Lift has been performed on the Breaker to check pump motor rotation (pump is uncoupled).
- Following rotation checks, pump coupling will be performed.

Which **ONE** of the following is correct? (0.25)

Prior to pump coupling, OPEN the breaker. The tag...

A) shall be cleared and reissued.

B) should be marked 'VOID', filed, and a new tag hung.

C) may remain lifted during the completion of the pump coupling.

D) shall be replaced on the breaker by the OCG.

Answer 110

D

A. Incorrect. NSD 500 allows for temporary removal of tags for testing for simple tasks (500.7.2.10).
B. Incorrect. Tag has been used and should NOT be voided.
C. Incorrect. Tag should be re-hung prior to continuing work.
D. Correct. NSD does allow TLFT, if documented on TLFT portion of tagging program.

1 POINT

Question *70*

Plant conditions:

- A portable vibration instrument has been installed on the 1A MFBW pump
- A temporary power cable has been installed per NSD-301 (Nuclear Station Modifications)

Which ON€ of the following is correct?

The power cable shall be tagged with a _____ tag and shall be documented in a log book located in the _____.

A. Red / Control Room

B. Red / Work Control Center

C. Temporary modification / Control Room

D. Temporary modification / Work Control Center

Question 70
T3

G2.2.11, **Knowledge of the process for controlling temporary changes.** (2.5/3.4*)

Answer: C

A. Incorrect, first part incorrect. A Temporary modification tag is required to be hung on the cable. Second part is correct.

5. Incorrect, first part incorrect. A Temporary modification tag **is** required to be hung on the cable. Second part incorrect. The Temporary modification log book is not kept in the WCC.

C. Correct, per NSD-302 the power cable shall be tagged with a Temporary modification tag and shall be documented in a log book located in the Control Room.

D. Incorrect, first pari correct. Second part incorrect. The Temporary modification log book **is** not kept in the WCC.

Technical Reference(s): **NSD-301 (Nuclear Station Modification)**

Proposed references to be provided to applicants during examination: **None**

Learning Objective: **ABM-SD, R4**

Question Source: **NEW**

Question History: Last NRC Exam _____

Question Cognitive Level: **Memory or Fundamental Knowledge**
Comprehension or **Analysis**

6. Referencing the following Nudear System Directives (NSDs): (R4)
   - Discuss the purpose, Operations / individual responsibilities, and management expectations (where applicable).
   - Apply the guidance within the NSD to determine or interpret required responses for a given situation.

   6.1 NSD 202 (Reportability)

   6.2 NSD 203 (Operability)

   6.3 NSD 301 (Nuclear Station Modifications)

   A. Ops Superintendent responsibilities

   B. Determination of Minor Mod (Identification and Classification section)

   6.4 NSD 310 (Requirements for the Maintenance Rule)

   6.5 NSD 505 (Investigation of Reactor Trips or Significant Transients)

   6.6 NSD 703 (Administrative instructions for Station Procedures)

7. Given a copy of WPM (Work Process Manual) 4Q1, generate a work order to have problems with plant equipment corrected. (R7)

8. Per the Incident Investigation Process Manual, complete the required actions for a work related injury or non-injury incident. (R8)

9. The operator will become well versed in the requirements in the foliowing NSDs. The operator should comprehend and apply the NSD as needed. (R9)

   9.1 NSD 500 (Safety Tags / Equipment Protection Tags)

   9.2 NSD 700 (Independent Verification)

10. The operator will become well versed in the requirements in the following NSDs. The operator should comprehend and apply the NSD as needed. (R10)

    10.1 NSD 304 (Reactivity Management)

    10.2 NSD 604 (Stop Work)

    10.3 NSB 704 (Technical Procedure Use and Adherence)

installed, and tested by an approved station procedure. Work Control must include TM work orders in the A(4) Risk Assessments per NSD 415 (innage) or NSD 403 (outage) for the duration of the TM. TM's affecting Oconee QA-5 equipment shall he treated as non-QA modifications.

301.7.4 TEMPORARY MODIFICATION LOG

Station work groups that have operational control of systems shall maintain a log of outstanding TMs. This log shall include a description of the modification, date installed, and the work order number(s).

301.7.5 TEMPORARY MODIFICATION TAG

After the TM is installed, the affected system, **structure or** component shall be tagged, if accessible. This tag shall he labeled as a "Temporary Modification" and shall identify the work order number, the name of the person who placed the tag, and the installation and estimated removal dates.

301.7.6 INDEPENDENT VERIFICATION

When applicable, independent verification of the installation and removal shall be perfoimed and documented.

301.7.7 PERIODIC REVIEWS

Periodic reviews of installed TMs shall be performed by the Engineering staff to assure that the log is up-to-date and that the TM is still required. These reviews shall ***be*** performed quarterly.

301.7.8 REMQVAL OF TEMPORARY MODIFICATIONS

The requesting group should initiate action so that the appropriate work order is used to remove TMs. The station work group that controls operation of the affected system sliall document their acceptance on this work order. The log book shall be updated and the tag removed. When applicable, independent verification of the removal **shall** he docuniented.

301.7.9 PERMANENT INSTALLATION

TMs that are to he made permanent shall be approved and documented hy either a Nuclear Station Modification or a Minor Modification.

301.7.10 EXCLUSIONS

Permanent and Temporaiy Station Procedures may **also** be used to implement TMs. 'This is typical of repetitive testing, maintenance, or operational activities. When Permanent or Teniporary Station Procedures are used to implement TMs, the specific documentation defined in this Section is **not** required provided the procedure contains equivalent controls (as defined in the Site Mod Manuals). Additional exclusions may be defined in the Site Mod Manual.

1 POINT

Question 71

Plant conditions:

- Befueling in progress

Which **ONE** of the following is correct concerning the Refueling SRO Assistant per OMP 2-1 (Duties and Responsibilities of On-Shift Operations Personnel)?

The Refueling SRO Assistant...

A. verifies that fuel-handling procedures are performed as written and may leave the Refueling Booth for short periods of time.

B. verifies reactivity changes are made with approved procedures and may leave the Refueling Booth for short periods of time.

C. ensures that all involved fuel-handling personnel are qualified and must remain in the Refueling Booth until relieved by another SRO Assistant.

D. ensures stable count rate prior to disengaging a fuel assembly and must remain in the Refueling Booth until relieved by another SRO Assistant.

Question 71
T3

G2.2.30, Knowledge of RO duties in the control room during fuel handling such as alarms from fuel handling area, communication with fuel storage facility, systems operated from the control room in support of fueling operations, and supporting instrumentation. (3.5/3.3)

Answer: D

A. Incorrect, the Refueling and RE?SRO ensure that fuel-handling procedures are performed as written.

B. Incorrect, first part is correct. Second part is incorrect.

C. Incorrect, each individual is responsible for being qualified to perform their duties.

D. Correct, the Refueling SRO Assistant ensures stable count rate prior to disengaging the fuel assembly and must remain in the Refueling Booth until relieved by another SRO Assistant.

Technical Reference(s): OMP 2-1 (Duties and Responsibilities of On-Shift Operations Personnel

Proposed references to be provided to applicants during examination: None

Learning Objective: FH-FHS, R37

Question Source: Bank # FH043701

Question History: Last NRC Exam _____

Question Cognitive bevel: Memory or Fundamental Knowledge
Comprehension or Analysis

26. Describe the potential for obtaining a critical mass with fuel assemblies during fuel handling. (R26)

27. Describe the fuel handling bridge interlocks and authorization necessary when bypassing the interlock. (836)

28. Describe the individuals' responsibilities pertaining to Refueling addressed in OMP 2-1 Roles and Responsibilities. (R37)

29. Describe those entries at a minimum that are included in the Refueling Log addressed in OMP 2-1 Roles and Responsibilities. (R38)

30. Discuss the actions which must be taken to place a fuel assembly into a location other that the one assigned by the Core Reload Sequence. (R27)

31. Describe the three Fuel Handling Accidents addressed in section 15 of the Final Safety Analysis Report. (R29)

32. Referring to NSD 104 (Housekeeping, Materiel Condition, and Foreign Material Exclusion) (830)

    32.1 States the foreign material exclusion controls associated with Level III & IV Cleanliness Zones.

    32.2 Describe the required action(s) when foreign material intrusion is detected.

    32.3 Describe the individuals' responsibilities as directed by NSD 104, Housekeeping, Material Condition, and Foreign Material Exclusion. (R30)

33. Given a copy of ITS / SLC's and associated Bases, analyze a given set of plant conditions for applicable ITS / SLC LCO's. (R32)

34. Given a summary description of any incident(s) and/or PIP(s) covered in class: (R35)

    34.1 Identify the root cause(s) of the incident.

    34.2 Discuss any corrective actions taken at Oconee as a result of the incident.

    34.3 Discuss lessons learned from the incident that could apply at Oconee.

5. **(Obj. R38)** The Refueling SRO is responsible for the Refueling Log. As a minimum, the refueling log should contain the following:
   a) Chronological sequence of the activity
   b) Abnormalities such as overload or underload conditions, equipment malfunctions and foreign material in the fuel transfer canal or spent fuel pool
   c) All re-indexing over the reactor
   d) Identification of shift change by signing the log
6. **(Obj. R27)** If it is necessary to place any fuel assembly in a location other than the on specified in the Core Reload sequence :
   a) The Reactor Engineer will document the moves in the Alternate Core Reload Enclosure.
   b) The Refueling SRO has authority to allow variation to the procedure and is responsible for the approval of the variance.

   During the 1994 Unit one refueling outage a Reactor Engineer ask the Refueling SRO to assist in obtaining data on the new NIs and the need for source rods. The RB Fuel handling crew moved several used fuel assemblies to various core locations so NI readings could be taken, but did not ungrapple the fuel assembly(s) until they were in their assigned core location as per the refueling procedure. The NRC is concerned over our lack of adequate procedure and the associated procedural review for performing this type of testing. This type of activity is not what the alternate plans for fuel assembly or component removal or insertion is designed to be used for.

   NOTE: If a new fuel assembly must be placed in a core location other than the one assigned in the Refueling Procedure, the alternate core location must first be approved by a Reactor Engineer. Placing a new fuel assembly in an alternate location, which is out of the core, does noli have to be evaluated by Rx. Engineer.
7. If a fuel assembly or component cannot be removed from or inserted into the core, the Refueling **SRO** should refer to the Overload or Underload Endosure and Alternate Core Reload Sequence Enclosure.

B. Refueling SRO Assistant

1. **Ensure no abnormal change in count rate and the count rate is stable before giving permission to disengage a fuel assembly lowered into the core.**
2. Maintains the controlling procedure and verifies the fuel handling activity agrees with the document.
3. Line of communication between the Control Room and Refueling Crew is through the SRO Assistant.

Question 33 FH043701 FH043701

Plant conditions:

- Defueling in progress

Which ONE of the following is correct concerning the Refueling SRQ Assistant per OMP 2-1 (Duties and Responsibilities of On-Shift Operations Personnel)? (.25)

The Refueling SRQ Assistant...

A. ensures that fuel-handling procedures are performed as written and may leave the Refueling Booth for short periods of time.

B. verifies reactivity changes are made with approved procedures and may leave the Refueling Booth for short periods of time.

C. ensures that all involved fuel-handling personnel are qualified and must remain in the Refueling Booth until relieved by another SRO Assistant.

D. ensure all prerequisites er met c to) change to core t and t r in in the Refueling I until relieved by another SRO Assistant.

Answer 33
D

A. Incorrect, the Refueling and RB SRQ ensure that fuel-handling procedures are performed as written.
B. Incorrect, first part is correct. Second part is incorrect.
C. Incorrect, each individual is responsible for being qualified to perform their duties.
5. Correct, The Refueling SRO Assistant ensures prerequisites are met and must remain in the Refueling Booth until relieved by another SRQ Assistant.

1 POINT

Question 72

An individual's administrative dose limit must be increased.

Which ONE of the following is correct?

The **maximum** the dose limit may be extended to **is** _____ Rem/year and the **minimum** approval required for this level **is** the _____.

A. 4.5 / Radiation Protection Manager and the Section Manages

B. 4.5 / Radiation Protection Manager and the Operations Shift Manager

C. 5.0 / Radiation Protection Manager, the Section Manager, and the Site Vice President

D. 5.0 / Radiation Protection Manager, the Station Manager, and the Site Vice President

Question 72
T3

G2.3.4, **Knowledge of radiation exposure limits and contamination control, including permissible levels in excess of those authorized.** (2.5/3.1)

Answer: D

A. Incorrect, with proper approvals an individual's dose limit may be extended to 5.0 rem/year. The Radiation Protection Manager and the Section Manager can approve extensions up to 4.5 rem/year.

B. Incorrect, with proper approvals an individual's dose limit may be extended to 5.0 rem/year.

C. Incorrect, with proper approvals an individual's dose limit may be extended to 5.0 rem/year. Phis requires' Approval from by the RP Manager, Station Manager, and Site VP.

D. Correct, with proper approvals an Individual's dose limit may be extended to 5.0 rem/year. This requires approval from by the RP Manager, Station Manager, and Site VP.

Technical Reference(s):

Proposed references to be provided to applicants during examination: **None**

Learning Objective: **RAD-RPP, R4**

Question Source: **NEW**

Question History: Last NRC Exam _____

Question Cognitive Level: **Memory or Fundamental Knowledge**
Comprehension or Analysis

5. While 10CFR20 dose limits deal with doses from "external" sources, and 40CFR190 deals with radiation doses to the public resulting from operation of the plant, period, 10CFR50 deals with radiation doses from liquid and gaseous effluents from the station. 10CFR50 limits exposures to unrestricted areas, brought about from activities in liquid effluents released from the station (ONS), to 9 mrem/year whole body, and 30 mrem/year to any organ. Dose limits resulting from gaseous activity released from the station (ONS) are limited to dose equivalents of 30 mrads for gamma, and 60 mrads for beta; and the dose to any organ from iodine activity is limited to 45 mrem/year. (These limits are listed in SLC 16.11-1 and 16.11-2)

D. Control of External Exposure

1. All dose up to 2.0 rem/yr will be controlled by the Section Manager of the group; that is, Section Managers are able to set dose targets for the individuals in their areas, up to the 2.0 rem/yr plateau, by making entries directly into the radiation monitoring and control (RM & C) computer program.

   (Obj R4) Authorization for a worker to exceed the basic permissible dose limit of 2.0 rem/yr, up to 4.5 Rem/yr, must be suppiied by the Wadiation Protection Manager and the Section Manager.

   Dose extensions in excess of 4.5 Rem/yr must be approved by the RP Manager, Station Manager, and Site VP.

2. Dose targets set by each section will be treated as dose limits, so that if a dose target for an individual is exceeded, it will be investigated by radiation protection.

3. Workers will normally be excluded from the RCA if they reach 4.5 **rem for the year.** Bo exceed 4.5 rem in a year (up to the federal limit of 5.0 rem) requires the approval of the Radiation Protection Manager, the Station Manager, and the Site Vice President. **No** worker will be allowed to exceed the NRC normal occupational exposure **limit** of 5.0 rem/year.

4. In addition to the 10% of normal limits for persons less than 18 years old (500 mredyr), minors should not be allowed into any high radiation areas.

5. **(Qbj R6)** Once a female worker declares her pregnancy (i.e., informs management) her dose should be limited to, typically, no more than 50 mrem per month, not to exceed a total of 500 mrem for the entire pregnancy. Entries into airborne radiation areas, or into high radiation areas by declared pregnant workers should be limited.

E. **(Obj R7)** Planned Special Exposure

3. Define the following dose terms and discuss how use each can be used to determine if an individual is controlling his dose within applicable limits. (R25)

   3.1 Dose Equivalent

   3.2 Deep-dose Equivalent

   3.3 Shallow-dose Equivalent

   3.4 Eye-dose Equivalent

   3.5 Committed Dose Equivalent

   3.6 Total Effective Dose Equivalent

   3.7 Annual Limit on Intake (ALI)

   3.8 Derived Air Concentrations (DAC)

4. State the Annual Limit on exposure for Total Effective Dose, Eye Dose Equivalent, Shallow Dose Equivalent, minors, and declared pregnant women, as established by the NRC; state both the basic and maximum administrative limits for each, as established by Duke Power Company. (R3)

5. State the approval requirements for an individual at Duke Power Company to exceed the basic permissible exposure limit of 2.0 rem. (R4)

6. State the special dose limits established for the general public. (R5)

7. Describe the special dose control measures used to protect the fetus of a "declared" pregnant radiation worker. (R6)

8. Recognize that in "exceptional situations", it is possible to allow an adult radiation worker to receive additional exposure, apart from normal occupational exposure. (R7)

9. Define and describe the specific site area for each of the following terns relating to the control of station areas: (R8)

   9.1 Unrestricted Area

   9.2 Restricted Area

   9.3 Owner Controlled Area

   9.4 Radiation Control Area (RCA)

   9.5 Radiation Control Zone (RCZ)

   9.6 Radiation Area (RA)

   9.7 High Radiation Area (HRA)

   9.8 Extra High Radiation Area (EHRA)

1 POINT

Question 73

An individual has accumulated the following doses:

- Committed Dose Equivalent (CDE) is 2525 mr
- Deep Dose Equivalent (DDE) is 2355 mr
- Lens Dose Equivalent (LDE) is 744 mr
- Committed Effective Dose Equivalent (CEDE) is 605 mr
- Shallow Dose Equivalent (SDE) is 435 mr

Which ON€ of the following is the individual's Total Effective Dose Equivalent (TEBE)?

A. 2790 mr

B. 2960 mr

C. 3534 mr

D. 4880 mr

Question **73**
T3
G2.3.1. Knowledge of 10CFR: 20 and related facility radiation control requirements. (2.6/3.0)

Answer: B

A. 2355 + 435 = 2790

B. Correct. TEDE = 605 (CEDE) + 2355 (DDE) = 2960

C. 2355 + 744 + 435 = 3534

D. 2525 + 2355 = 4880

Technical Reference(s):

Proposed references to be provided to applicants during examination: **None**

Learning Objective: **RAD-RPP, R25**

Question Source: **Bank #**

Question History: **Last NRC Exam QNS 2002**

Question Cognitive Level: Memory or Fundamental Knowledge
Comprehension or Analysis

3. **Define the following dose terns and discuss how use each can be used to determine if an individual Is controlling his dose within applicable limits. (R25)**

   3.1 Dose Equivalent

   3.2 Deep-dose Equivalent

   3.3 Shallowdose Equivalent

   3.4 Eye-dose Equivalent

   3.5 Committed Dose Equivalent

   3.6 Total Effective Dose Equivalent

   3.7 Annual Limit on Intake (ALI)

   3.8 Derived Air Concentrations (DAC)

4. State the Annual Limit on exposure for Total Effective Dose, Eye Dose Equivalent, Shallow Dose Equivalent, minors, and declared pregnant women, as established by the NRC; state both the basic and maximum administrative limits for each, as established by Duke Power Company. (R3)

5. State the approval requirements for an individual at Duke Power Company to exceed the **basic** permissible exposure limit of 2.0 rem. (R4)

6. State the special dose limits established for the general public. (R5)

7. Describe the special dose control measures used to protect the fetus of a "declared" pregnant radiation worker. (R6)

8. Recognize that in "exceptional situations", it is possible to allow an adult radiation worker to receive additional exposure, apart from normal occupational exposure. (R7)

9. Define and describe the specific **site** area for each of the following terms relating to the control of station areas: (R8)

   9.1 Unrestricted Area

   9.2 Kestricted Area

   9.3 Owner Controlled Area

   9.4 Radiation Control Area (RCA)

   9.5 Radiation Control Zone (RCZ)

   9.6 Radiation Area (RA)

   9.7 High Radiation Area (HRA)

   9.8 Extra High Radiation Area (EHRA)

1 POINT

Question 74

Which ONE of the following set of conditions will activate the "RC SYSTEM APPROACHING SATURATED CONDITION"(SA-18,D6) Statalarm?

NI Power at _____%, and CORE subcooling margin indication at _____°F.

A. 1 / 16

B. 1 / 12

C. 5 / 16

D. 5 / 22

Question 74
T3
G2.4.46, **Ability to verify that the alarms are consistent with the plant conditions.** (3.5/3.6)

Answer: B

A. incorrect, Power < 2% Core alarms at less than 15 degrees

B. Correct, Power < 2% Core alarms at less than 15 degrees

C. Incorrect, Power > 2% Core alarms at less than 18 degrees

D. incorrect, Power > 2% Core alarms at **less** than 10 degrees

---

Technical Reference(s):

Proposed references to be provided to applicants during examination: **None**

Learning Objective: **IC-RCI, R41**

Question Source: **Bank # IC084102**

Question History: Last NRC Exam _____

Question Cognitive Level: **Memory or Fundamental Knowledge**
Comprehension **or** Analysis

16. **Describe the purpose and the conditions that will result In a "RC Approaching Saturation Condition" statalarm and the reflash function of the alarm. (R41)**

17. Describe the temperature indication the operator will observe from the OAC subcooling margin program for subcooled, saturated, and superheated conditions of the RC loop(s) end core. (R42)

18. Given a copy of ITS/SLCs and associated Bases, analyze a given set of plant conditions for applicable ITS/SLC LCO's. (R64)

19. Apply all ITSISLC rules to determine applicable Conditions and Required Actions for a given set of plant conditions. (R65)

20. Compute the maximum Completion Time allowed for all applicable Required Actions to ensure compliance with ITS/SLC's. (R66)

1) Use of only the qualified (PAM) CETC's is not mandatory unless a hostile environment exists in the Reactor Building.

2) If NI power is < 2% then the OAC assumes a hostile environment may exist in the Reactor Building.

OAC and ICCM SCM Program Inputs	
OAC SCM	Loops - (ES Analog) WR Pressure + (ICS) WR Th RTD
	Core - Lower of the two Loop (ES Analog) WR Pressures + if NI power 2% an average of all operable 47 CETCs. If NI power < 2% for 45 seconds an average of the 5 highest of the 24 qualified CETCs (ICCM).
ICCM SCM	Loops - ICCM WR Pressure + WR (ICCM) Th RTD
(Tr A & B)	Core - ICCM WR Pressure + an average of the 5 highest of the 12 CETCs for that ICCM Train

F. Alarm Conditions -actuated from the OAC SCM program ONLY

1. A saturation condition alarm will be activated under the following conditions: "RC APPROACHING SATURATED CONDITIONS"

   a) If power >2% and Loop A Margin <15°F andlor Loop B Margin <15°F and/or Cere Margin <10°F.

   b) If power <2% and Loop A Margin <15°F or Loop B Margin <15°F or Core Margin <15°F.

   c) The alarm will reflash if any of the subcooling margins reach 5 degree F. Operator could experience multiple reflashes.

   d) An OAC alarm will alert the operator to actual saturated conditions at 0°F.

G. Indications

1. Loop and Core Margins are displayed on the 4 SCM indication windows located above the "standout" panel on UBI.

   a) Loops A and Band Core Temperature Margin

2. If the temperature margin (RC pressure/temperature combination) is >0°F (SUBCOOLED) the numerical LEDs will display solid red numbers The number will indicate the number of degrees subcooled.

3. If the temperature margin (RC pressure/temperature combination) is either on the 0°F Subcooled Curve or between this curve and the 0°F Superheat Curve the numerical LEDs will display flashing red 000's.

4. If the temperature margin (RC pressure/temperature combination) is beyond the 0°F Superheat Curve the display will indicate flashing red negative numbers. The number will indicate the number of degrees superheated.

Question 180 IC084102 IC084102

Which ONE of the following set of conditions will activate the "RC SYSTEM APPROACHING SATURATED CONDITION"(SA-18,D6) statalarm? (.25)

NI Power at _____%, and GORE subcooling margin indication at _____°F.

A) 1 / 16

B) 1 / 12

C) 10 / 26

D) 10 / 12

Answer 180
B
A. Incorrect. Power a 2% Core alarms at less than 15 degrees
B. Correct, see A above
C. Incorrect, Power > 2% Core alarms at less than 10 degrees
D. Incorrect, same as C above

1 POINT

Question 75

The following are Log entries from the Emergency Coordinator (EC/OSM) Log following an event at Oconee Unit 2.

1105 - EC/OSM declared an Alert, 6% failed fuel

1111 - Qffsite Communicator completed required notifications.

1112 – EC/OSM declared a General Emergency based on RIA-57 readings.

1117 - EC/OSM provided the following offsite protective recommendations to the Offsite Communicator:

- Evacuation of Pickens AO, A1, B1, C1, and Oconee A0, D1, E1, F1
- Shelter of Pickens A2, B2, C2, and Oconee D2, E2, 62.

1120 - EC/OSM signed message form to provide offsite recommendations.

1122 - Station Manager in the control room began turnover to TSC.

1125- Present time of day.

Which ONE of the following describes how many minutes the Offsite Communicator has to complete their notifications to State and Counties from the present time?

A. 2 minutes

B. 8 minutes

C. 10 minutes

D. 15 minutes

Question 75
T3
G2.4.29, Knowledge of the **emergency plan**. (2.6/4.0) 7

Answer: A

A. Correct, initial Emergency Notifications and classification upgrades must be provided to Qconee County, Pickens County, and SC State within 15 minutes of event declaration or upgrade. The time starts when the **EC/OSM** declared a **GE.**

B. Incorrect, time started when EC/OSM declared a GE, used time offsite protective recommendationswere given.

C. Incorrect, time started when EC/OSM declared a GE, used time EC/OSM signed the message form.

D. Incorrect, time started when EC/OSM declared a GE, used the total time allowed to make offsite notifications.

Technical Reference(s):

Proposed references to be provided to applicants during examination: None

Learning Objective: EAP-SEP, R14

Question Source: Bank **# EAP191401**

Question History: Last NWC Exam _____

Question Cognitive Level: Memory or Fundamental Knowledge
Comprehension or Analysis

Contacted Gerry Laska on 4/5/04 to discuss *the* selected *KA.* At *ONS* Reactor Operators are not on the Fire Brigade. *Mr.* Laska randomly selected another *KA. The* new *KA* is *G2.4.29.*

15. Given a reading from one of the OAC Wind Direction Instruments be able to determine the direction the wind is coming from and the direction the wind is going. (R-18)

16. Briefly describe the Alert and Notification System for Oconee Nuclear Site and the procedure for its use. (R-13)

17. Describe the dufies and responsibilities of the Control Room Offsite Communicators, (RP/0/B/1000/015A) (R-14)

    17.1 List the various communication equipment available at Oconee for making required notifications, (RP/0/B/1000/015A).

    17.2 Given an Emergency Notification Form, be able to complete the appropriate sections of the *form* for initial notifications, follow-up messages, and change of classifications.

    A. Recognize all Offsite Notifications Forms filled out that are not for an actual event will be marked "This is a DRILL".

    17.3 Be able to discuss items that should be reviewed or given to the TSC Offsite Communicator during communicator turnover.

18. Describe the duties and responsibilities of the On-shift NRC Communicator. (R-15)

    Be able to complete the notification form for initial notification.

    State the communication equipment available at Oconee for making required notification.

B. (OBJ R-14) Control Room Offsite Communicator Duties and Responsibilities

1. The Operations Offsite Communication must use the same time reference that the Emergency Coordinator (OSM) is using.

   a) We could miss the 15 minute time limit to notify the Offsite Agencies if the time reference used to log when the Emergency declaration was made and the time reference used to log when the notification to the Offsite Agencies occurred were different!

2. Refer to RP/0/B/1000/015A, Offsite Communications from the Control Room.

3. Notification of Offsite Agencies (State/County)

   a) Complete Emergency Notification Form.

CAUTION: To prevent possible communication errors with the State and County Authorities, ALL Offsite Notifications Forms filled out that are not for an ACTUAL EVENT will be marked A "This is a DRILL". This is to include all Offsite Notification Forms completed during Training, Testing, Drills, and JPMs.

1) Obtain Emergency Description/ Remarks wording from Operations Shift Manager and the Emergency Action Level Guideline Manual.

2) Obtain Plant Condition/Reactor Status information from Operations Shift Manager.

b) Provide completed form to Emergency Coordinator (Operations Shift Manager) for his review and approval on line 16.

1) initial Emergency Notifications and classification upgrades must be provided to Oconee County, Pickens County, and SC State within 15 minutes of event declaration or upgrade.

(a) The timeframe for making the required notifications *shall* start at the *time* that *the* Emergency *Coordinator/ EOF Director* determines *the* correct classification for the event. (Recorded on bine 6)

c) Use Selective Signaling to notify offsite agencies.

1) Have the Authentication Code list available prior to call offsite agencies. The Authentication Code list is located in a yellow folder in the Emergency Procedures Cart along with the Emergency Notification Forms, a copy of the Emergency Telephone Directory, and a copy of RP/O/B/1000/15A, Offsite Communications from the Control Room.

NOTE: Use alternate communications systems as needed if Selective Signaling is unavailable. Consult the Emergency Telephone Directory.

Question 302 EAP191401 EAP191401

The following are Log entries from the Emergency Coordinator (EC/OSM) Log following an event at Qconee Unit 2.

1105 - EC/OSM declared an Alert, 6% failed fuel

1111 - Offsite Communicator completed required notifications.

1112 - OSM determines a General Emergency exists based on RIA-57 readings.

1117 - EC/OSM provides the fallowing offsite protective recommendations to the Offsite Communicator:

- Evacuation of Pickens A0, A1, B1, C1, and Oconee A0, D1, E1, F1
- Shelter of Pickens A2, B2, C2, and Oconee D2, E2, F2.

1120 - EC/OSM signed message form to provide offsite recommendations.

1122 - Station Manager in the control room began turnover to TSC.

1125- Present time of day.

Which ONE of the following describes how many minutes the Offsite Communicator has to complete their notifications to State and Counties from the present time? (.25)

A) 2 minutes

B) 8 minutes

C) 10 minutes

D) 15 minutes

Answer 302

A. Correct Time started when EC/OSM declared a GE existed.

B. Incorrect Time started when EC/OSM declared a GE, used time offsite protective recommendations were given.

C. Incorrect Time started when EC/OSM declared a GE, used time EC/OSM signed the message form.

D. Incorrect Time started when EC/OSM declared a GE, used the total time allowed to make offsite notifications.

Keowee Hydro Station -

Emergency Start

Enclosure 6.3

KHS One-Line Diagram

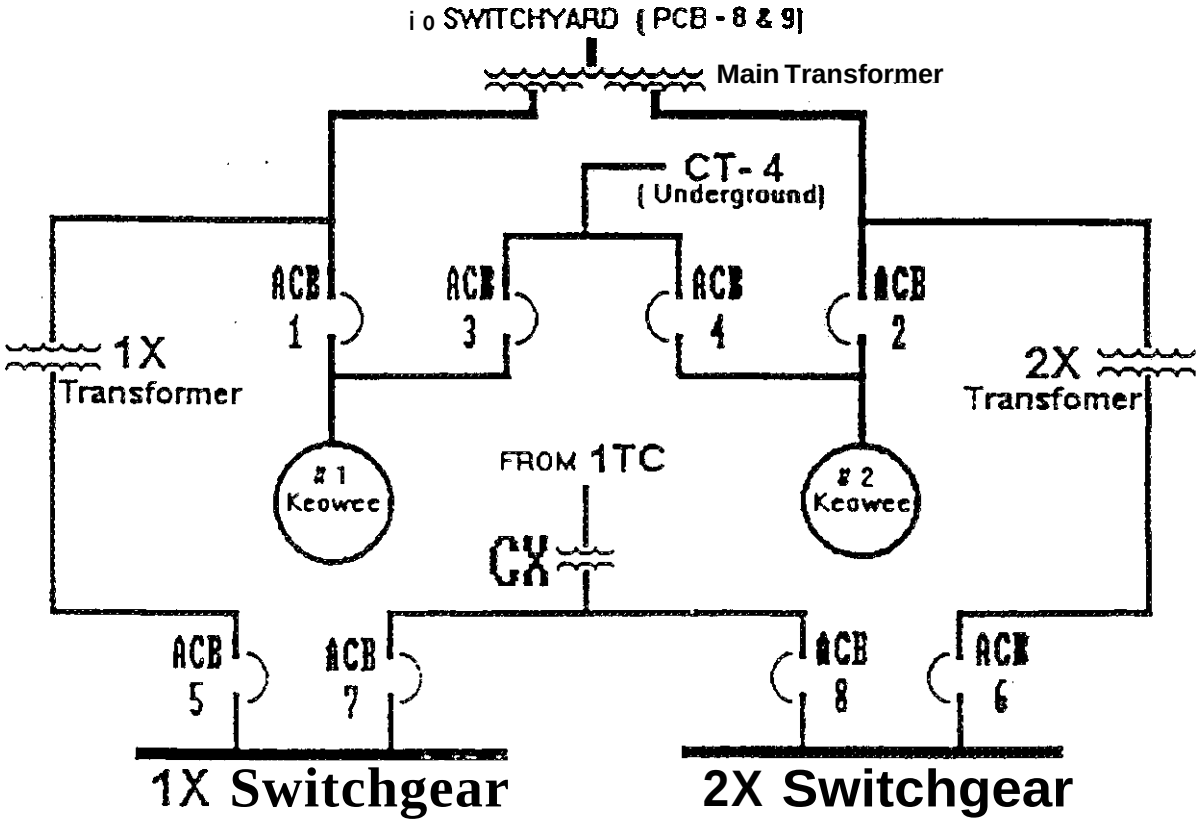

Keowee Hydro Station -

Emergency Start

Enclosure 6.3

KHS One-Line Diagram