Draft Submittal

NORTH ANNA JUNE EXAM
50-338 & 50-339/2004-301

JUNE 17 - 25,2004

1. Administrative Questions/JPMs ✓
2. In-plant JPMs ✓
3. Control Room JPMs (simulator JPMs) ✓
4. Administrative Topics Outline ES-301-1 ✓
5. Control Room Systems and Facility Walk-Through Test Outline ES-301-2 ✓

PART 1 OF 2

Facility: North Anna Power Station Exam Level (circle one): **RO** / SRO(I) / SRO(U)	Date of Examination: 6/21-7/2/2004 Operating Test **No.:** 1

Control Room Systems (8 for RO; 7 for SRO-I; 2 or 3 for SRO-U)

System / JPM Title	Type Code*	Safety Function
a. Retrieve A Dropped Rod (K/A 003AA1.02) (1-AP-1.2)	(D), (S),	1
b. Verify SI Flow (WA 006A2.52) (Alternate path to exercise attachment 6 of E-0 to establish hot leg injection)	(N), (A), (S)	2
c. Respond to a Loss of RCS Pressure (K/A 010A2.02) (R634 Mod) (1-AP-44) (Spray valve does not close. Unit will need io **be** tripped and RCP secured to stabilize pressure)	(M), (A), (S)	3
d. Respond to a Loss of **RHR** (WA 005A2.03) (10820) (4-AB-11)	(D), (A), (S), (L)	4P
e. Fill the PRT (WA 007A1.01) (R642) (2-OP-5.7) (Perform on Unit 2)	(D), (C),	5
f. Sync EDG to Emergency Bus (K/A 064A4.07) **(EDG** malfunction causes load to increase above limit requiring EDG to be shutdown whiie ioading EDG per 1-PT-82H)	(N), (A), (S)	6
g. Respond to a failure of 1-CH-PT-1145, Low Pressure Letdown Pressure Transmitter (WA 016A2.03)(Doesn't respond in manual. Needs to place excess letdown in service per 1-OP-8.5.)	(M), (A), (S)	7
h. Transfer Steam **Dumps** to Steam Pressure Mode (WA 041A4.04) (8664)	(D), (C),	45

In-Plant **Systems** (3 for RO; **3** for SRO-I; 3 or 2 for SRO-U)		
i. Aiign Service Water to **the** AFW Pumps ***(WA*** 054AA1.01) (N1528) (2-AP-22.5) (Perform on Unit **2)**	(D), (R)	4S
j. **Split** Out Component Cooling between Units 1 and 2 ***(WA*** 008A2.02) (N877) (1-AP-15)	(D), (R)	8
k. Isolate RCP Seals Locally (K/A 003A2.01) (N10) (attachment 3 of ECA 0.0)	(D), (R)	4P
* Type Codes: (D)irect from bank, (M)odified from bank, (N)ew, (A)lternate path, (C)ontrol room, (S)imulator, (L)ow-Power, (R)CA		

Facility: North Anna Power Station Exam bevel (circle one): RO / SRO(I) SRO(U)	Date of Examination: 6121-7/2/2004 Operating Test No.: 1

Control Room Systems (8 for RO; 7 for SRO-I; 2 or 3 for SRO-U)

System UPM Title	Type Code*	Safety Function
a. Retrieve A Dropped Rod (WA 003AA1.02) (1-AP-1.2)	(D), (S),	4
b. Verify SI Flow (K/A 006A2.02) (Alternate path *to* exercise attachment 6 of E-0 to establish hot leg injection)	(N), (A), (S)	2
c. Respond to a Loss *of* RCS Pressure (K/A 010A2.02) (R634 Mod) (1-AP-44) (Spray valve does not close. Unit will need to be tripped and RCP secured *to* stabilize pressure.)	(M), (A), (S)	3
d. Respond to a Loss of RHR (K/A 005A2.03) (10820) (1-AP-11)	(D), (A), (S), (L)	4P
e. Fill the PRT (K/A 007A1.01) (R642) (2-OP-5.7) (Perform on Unit 2)	(D), (C),	5
f. Sync EDG to Emergency Bus (WA 064A4.07) (EDG malfunction causes load to increase above limit requiring EDG to be shutdown while loading EDG per 1-PT-82H)	(N), (A), (S)	6
g. Respond to a failure of 1-CH-PT-1145, bow Pressure Letdown Pressure Transmitter (K/A 016A2.03) (Doesn't respond in manual. Needs to place excess letdown in service per 1-0P-8.5.)	(M), (A), (S)	7
h. Transfer Steam Dumps to Steam Pressure Mode (WA 041A4.04) (R664)	(D), (C),	4s

In-Plant Systems (3 for RO; 3 for SRO-I; 3 or 2 for SRO-U)		
i. Align Service Water to the AFW Pumps (K/A 054AA1.01) (N1528) (2-AP-22.5) (Perform on Unit 2)	(D), (R)	4S
j. Split Out Component Cooling between Units 1 and 2 (K/A 008A2.02) **(N877) (1-AP-15)**	(D), (R)	8
k. Isolate RCP **Seals Locally** (K/A 003A2.01) (N10) (attachment 3 of ECA 0.0)	(D), (R)	4P
* Type Codes: (D)irect from bank, (M)odified from bank, (N)ew, (A)lternate path, (C)ontrol room, (S)imulator, (L)ow-Power, (R)CA		

Facility: North Anna Power Station Exam Level (circle one): RO / SRO(I) / SRO(U)	Date of Examination: 6/21-7/2/2004 Operating Test No.: 1

Control Room Systems (8 for RO; 9 for SRO-I; 2 or 3 for SRQ-U)

System / JPM Title	Type Code*	Safety Function
a. Retrieve A Dropped Rod (WA 003AA1.02) (I-AP-1.2)	(D), (S)	1
b. Verify SI Flow (K/A 006A2.02) (Alternate path to exercise attachment 6 of E-0 to establish hot leg injection)	(N), (A), (S)	2
c. Respond to a Loss of RCS Pressure (WA 010A2.02) (R634 Mod) (1-AP-44) (Spray valve does not close. Unit will need to be tripped and RCP secured to stabilize pressure)	(M), (A), (S)	3
d. Respond to a Loss of RHR (WA 005A2.03) (10820) (1-AP-11)	(D), (A), (S), (L)	4P
e. Fill the PRT (WA 007A1.01) (R642) (2-OQ-5.7) (Perform on Unit 2)	(D), (C)	5
f. Sync EDG to Emergency Bus (WA 064A4.07) (EDG malfunction causes load to increase above limit requiring EDG to be shutdown while loading EDG per 1-PT-82H)	(N), (A), (S)	6
g. Respond to a failure of 1-CH-PT-1145, Low Pressure Letdown Pressure Transmitter (K/A 016A2.03)(Doesn't respond in manual. Needs to place excess letdown in service per 1-OP-8.5.)	(M), (A), (S)	7
h. Transfer Steam Dumps to Steam Pressure Mode (K/A 041A4.04) (R664)	(D), (C)	4S

In-Plant Systems (3 for RO; 3 for SRO-I; 3 or 2 for SRO-U)		
i. Align Service Water to the AFW Pumps (K/A 054AA1.01) (N1528) (2-AP-22.5) (Perform on Unit 2)	(D), (R)	4S
j. Split Out Component Cooling between Units 1 and 2 (K/A 008A2.02) **(N877) (1-AP-15)**	(D), (R)	8
k. Isolate RCP Seals Locally (K/A 003A2.01) (N10) (attachment 3 of ECA *0.0)*	(D), (R)	4P
* Type Codes: (D)irect from bank, (M)odified **from** bank, (N)ew, (A)lternate path, (C)ontrol room, (S)imulator, (L)ow-Power, (R)CA		

Draft

Facility: North Anna power Station Examination Level (circle one): RO/ SRO	Date of Examination: 6/21-7/2/2004 operating Test Number: 1

Administrative Topic (see Note)	Describe activity to be performed.
Conduct of Operations	**Evaluate 1/M for Continued Approach to Criticality. Alternate path. Criticality Imminent above ECP Upper Limit. Significantly modified. (K/A 2.1.23)**
Conduct of Operations	**Perform RCS Leakrate Hand Calculation. Modified from Bank. (K/A 2.1.20)**
Equipment Control	Review work order for attachment to existing tag out. Alternate Path. New JPM. Work Order will not have sufficient boundary and PMT requirements will not be able to be met. (K/A 2.2.17)
Radiation Control	Given an Attached Survey, Determine Entry Requirements and Stay Times Associated with a Given Work Activity. New JPM. (K/A 2.3.4)
Emergency Plan	Given a Completed Notification Form, Make Required Notifications. Alternate Path. Primary Communication Won't work and One County Will Have to be Called Separately. (K/A 2.4.43)

N M E All items (5 total) are required for SROs. RO applicants require only 4 items unless they are retaking only the administrative topics, when 5 ere required.

Draft

Facility: North Anna power Station Examination Level (circle one): RO/ **SRO**	Date of Examination: 6/21-7/2/2004 Operating Test Number: 1
Administrative Topic (see Note)	Describe activity to be performed.
Conduct of Operations	**Evaluate 1/M for Continued Approach to Criticality. Alternate path Criticality Imminent above ECP Upper Limit. Significantly modified. (K/A 2.1.23)**
Conduct of Operations	**Perform RCS Leakrate Hand Calculation. Modified from Bank. (K/A 2.1.20)**
Equipment Control	**Review** work order **for attachment** *to* **existing** tag **out. Alternate** Path. **New JPM. Work** Order will not have **sufficient boundary and PMT requirements will not be able to be met. (K/A 2.2.17)**
Radiation Control	Given an **Attached Survey, Determine Entry Requirements and** Stay Times **Associated** *with* **a Given Work Activity.** New **JPM. (K/A 2.3.4)**
Emergency Plan	**Determine EPIP Event Classification. Modified from Bank. (K/A 2.4.41)**

NOTE: All items (5 total) are required *for* SROs. RO applicants require only 4 items unless they are retaking only the administrative topics, when 5 are required.

JPM Index

Tab 1 JPM Outline
Tab 2 Retrieve A Dropped Rod
Tab 3 Verify SI Flow
Tab 4 Respond To A Loss of RCS Pressure
Tab 5 Respond To A Lass Of RHR
Tab 6 Fill The PRT
Tab 7 Sync The EDG To The Emergency Bus
Tab 8 Respond To A Failure Of 1-CH-PT-1145
Tab 9 Transfer Steam Dumps to Steam Pressure Mode
Tab 10 Align Service Water To The AFW Pumps.
Tab 11 Split Out Component Cooling Water between Units 1 And 2
Tab 12 Isolate RCP Seals Locally

Dominion
North Anna Power Station
JOB PERFORMANCE MEASURE EVALUATION

OPERATOR PROGRAM

INITIAL **CONDITIONS**

Unit 1 was at 100% steady-state operation prior to the event

Control bank A control rod P-10 is at 0 steps, as indicated by individual rod position

I-AP-I.2, "Dropped Rod," has been signed off to the point of completing the "Dropped Rod Retrieval" attachment

INITIATING CUE

You are requested to complete the "Dropped Rod Retrieval" attachment in 1-AP-1.2.

Dominion
North Anna Power Station
JOB PERFORMANCE MEASURE EVALUATION

OPERATOR PROGRAM

R476

TASK

Retrieve a dropped rod (1-AP-1.2).

TASK STANDARDS

Rod P-10 was returned to the correct height

K/A REFERENCE:

003-AA1.02 (3.4/3.4)

ALTERNATE PATH:

N/A

TASK COMPLETION TIMES

Validation Time = 15 minutes
Actual Time = _____ minutes

Start Time = _____
Stop Time = _____

PERFORMANCE EVALUATION

Rating [ ] SATISFACTORY [ ] UNSATISFACTORY

Candidate (Print) _____

Evaluator (Print) _____

Evaluator's Signature / Bate _____

EVALUATOR'S COMMENTS

_____

_____

_____

Dominion
North Anna Power Station

JOB PERFORMANCE MEASURE
(Evaiuation)

OPERATOR PROGRAM

R476

READ THE APPLICABLE INSTRUCTIONS PO THE CANDIDATE

Instructions for Simulator JPMs

I will explain the initial conditions, and state the task to be performed. All control room steps shall be performed for this JPM, including any required communications. I will provide initiating cues and reports on other actions when directed by you. Ensure you indicate to me when you understand your assigned task. To indicate that you have completed your assigned task return the handout sheet I provided you.

Instructions for In-Plant JPMs

I will explain the initial conditions, and state the task to be performed. All steps, including any required communications, shall be simulated for this JPM. Under no circumstances are you to operate any plant equipment. I will provide initiating cues and reports on other actions when directed by you. Ensure you indicate io me when you understand your assigned task. To indicate that you have completed your assigned task return the handout sheet I provided you.

INITIAL CONDITIONS

Unit 1 was at 100% steady-state operation prior to the event

Control bank A control rod P-10 is at 0 steps, as indicated by individual rod position

1-AP-1.2, "Dropped Rod," has been signed off to the point of completing the "Dropped Rod Retrieval" attachment

INITIATING CUE

You are requested to complete the "Dropped Rod Retrieval" attachment in I-AQ-I.2.

EVALUATION METHOD

Demonstration if conducted in the simulator or in a laboratory (use DEMONSTRATION cues)

Verbal-visual if conducted in the station or on a dead simulator (use VERBAL-VISUAL cues)

TOOLS AND EQUIPMENT

Copy of I-AP-1.2 signed off to the point of compieting the "Dropped Rod Retrieval" attachment

PERFORMANCE STEPS

START TIME _____

1	Verify that both group step counters for control bank "A" indicate the same value.	Procedure Step Attach. 2 step 1

SAT [ ] UNSAT [ ]

Standards	Operator verifies both Group A step counters at 228
Dead Simulator Cues	Tell the operator group step counters for control bank A indicate 228 steps.

Notes/Comments

2	**Place the control rod bank selector switch in BANK SELECT.**	**Procedure Step 2**
	Critical Step	SAT [ ] UNSAT [ ]

Standards	Rod control selector switch is in the CONTROL BANK A position

Notes/Comments

3	**Record the affected bank's group step counter reading.**	**Procedure Step 3**
		SAT [ ] UNSAT [ ]

Dead Simulator Cues	Control bank A group 2 step counter reading is [228] (value should correspond to the "fully withdrawn" position, which is cycle-dependent)

Notes/Comments

4	**Manually reset the group step counter.**	**Procedure Step 4**
	Critical Step	SAT [ ] UNSAT [ ]

Standards	Pushbutton for control bank A group 2 step counters are manually reset to zero

Notes/Comments

5	Request an extra operator to obtain the pulse-to-analog converter reading for control bank A.	Procedure Step 5

SAT [ ] UNSAT [ ]

Standards	**Backboards operator paged** to **obtain P/A reading**

Demonstration Cues	Control bank A pulse-to-analog converter reading is [228] (value should correspond to the "fully withdrawn" position, which is cycle-dependent)

Dead Simulator Cues	Control bank A pulse-to analog converter reading is [228] (value should correspond to the "fully withdrawn" position, which is cycle-dependent)

Notes/Comments

6	Record the affected bank pulse-to-analog converter reading.	Procedure Step 5

[SAT[ ] UNSAT[ ]

Standards	Operator records P/A reading as 228 **steps**

Notes/Comments

7	Request an extra operator to reset the pulse-to-analog converter for control bank A.	Procedure Step 6

SAT [ ] UNSAT [ ]

Standards	An operator is ested to reset P/A converter.

Demonstration Cues	Booth will tell the operator that the P/A for control bank A is reset to zero

Dead Simulator Cues	Tell the operator the P/A converter is reset to zero.

8	Record the IRPI identification for the dropped rod.	Procedure Step 7

SAT [ ] UNSAT [ ]

Standards	Operator records IPRI identification as P-10

Notes/Comments

9	Open all lift coil disconnect switches for the affected bank, except the switch for the dropped rod.	Procedure Step 8

Critical Step SAT [ ] UNSAT [ ]

Standards	All lift coil disconnect switches for control bank A are open except for rod P-10

Notes/Comments

10	Independently verify that all lift coil disconnect switches for the affected bank, except the switch for the dropped rod, are open	Procedure Step

SAT [ ] UNSAT [ ]

Demonstration Cues	Assume that another operator has performed this step
Dead Simulator Cues	Assume that another operator has performed this step

Notes/Comments

11	Manually withdraw the affected control rod.	Procedure Step 9/10/12

Critical Step	SAT [ ] UNSAT [ ]

Standards	Control rod P-10 is withdrawn to the value previously recorded for the group step counter (228)
Demonstration Cues	Reactor Coolant System temperature control will be accomplished by the balance-of-plant operator
Dead Simulator Cues	Reactor Coolant System temperature control will be accomplished by the balance-of-plant operator. When rod pull complete, tell the operator P-10 is at 228 steps.

Notes/Comments

12	**Record the step indicated on the affected group step counter.**	**Procedure Step I 3**

SAT [ ] UNSAT [ ]

Standards	**Operator records group step counter at** 226.

Notes/Comments

13	Verify that all rods in the affected bank are at the same height and that no rod bottom light is lit.	Procedure Step 14

[SAT [ ] UNSAT [ ]

Standards	Operator verifies all rods at 228 and no rod bottom lights lit.
Dead Simulator Cues	All rods are now at 226 no rod bottom lights are lit.

Notes/Comments

14	Close all lift coil disconnect switches.	Procedure Step 15

SAT [ ] UNSAT [ ]

Standards	All lift coil disconnect switches toggled downward.

Notes/Comments

15	Independently verify that all lift coil disconnect switches for the affected bank are closed.	Procedure Step 15

SAT [ ] UNSAT [ ]

Demonstration Cues	Assume that another operator has performed this step

Dead Simulator Cues	Assume that another operator has performed this step

Notes/Comments

16	**Reset the ROD CONTROL URGENT FAILURE alarm.**	**Procedure Step 16**

SAT [ ] UNSAT [ ]

Standards	Operator presses rod control alarm reset pushbutton.
Dead Simulator Cues	After reset has been pressed: The ROD URGENT FAILURE alarm is NOT lit.

Notes/Comments

17	Step the affected bank control rods in one step, and verify that group 2, and then group-1, are sequencing properly.	Procedure Step 17

SAT [ ] UNSAT [ ]

Standards	Operator steps rods in to 227 steps.
Dead Simulator Cues	After rods are stepped A bank is now reading 227 steps.

Notes/Comments

18	Step the affected bank control rods out one step, and verify that group 1, and then group 2, are sequencing properly.	Procedure Step 18

SAT [ ] UNSAT [ ]

Standards	Operator steps rods out to 228 steps.
Dead Simulator Cues	After rods are stepped: A bank is now reading 228 steps.

Notes/Comments

19	Verify that the pulse-to-analog converter indicated the value previously recorded.	Procedure Step N/A

SAT [ ] UNSAT [ ]

Demonstration Cues	Assume that another operator will complete the procedure
Dead Simulator Cues	Assume that another operator will complete the procedure

Notes/Comments

>>>>> END OF EVALUATION <<<<<

STOP TIME

SIMULATOR, LABORATORY, IN–PLANT SETUP
(If Required)

TODD, THESE ARE SOME STEPS FROM A RECENT SEG THAT WAS RUN. THEY MAY OR MAY NOT **BE** WHAT YOU WANT.

_____ Recall IC # for 100% power

_____ Enter malfunction RD1624 DROPPED RCCA P-10 CONTROL BANK A, Delay = 1, Trigger = I

_____ Perform necessary steps of AP-1.2 and place simulator in FREEZE.

_____ NOTE: Prior to rod retrieval ***DELETE*** malfunction RD1624 AND ENTER THE FOLLOWING:

_____ Switch Override CONTROL_BKA_GR1 Control Bank A Group 1 incrementor, Digital value = OFF, Trigger = 2

_____ Perform steps of AP-1.2 ATT 2 and 4 as requested by the crew using ROD LOGIC CONTROL-RD3 screen located on:

PNID INDEX - ROD CONTROL SYSTEM
RD3-ROD LOGIC CONTROLS
CLICK on GREEN AUTO box to shift to MANUAL – Green AUTO block will go Red and the word Yellow MANUAL will blink and switch position will change to MANUAL.

CLICK on the BANK selector switch and ensure it is pointed to " A Control Bank – The selected bank name changes to Red when active.

_____ When requested inform the Control Room the Pulse to Analog Converter reading is 228 (step 5 of AP-I.2 Att 2)

_____ NOTE: When the crew closes the Lift Coil Disconnect Switches DELETE CONTROL_BKA_GR1 Control Bank A Group 1 incrementor OVERRIDE

VIRGINIA POWER
NORTH ANNA POWER STATION
ABNORMAL PROCEDURE

NUMBER	PROCEDURE TITLE	REVISION
1-AP-1.2	DROPPED ROD (WITH FOUR ATTACHMENTS)	9
		PAGE 1 of 7

PURPOSE

To provide instructions for recovering a dropped rod.

ENTRY CONDITIONS

This procedure is entered when a rod drops, as indicated by any of the following:

- Rod bottom light is LIT.
- Rapid decrease in Tave.
- Rapid decrease in Reactor power level.
- Rapid decrease in Pressurizer pressure and level.
- Annunciator Panel "A" G-2, RPI ROD BOT ROD DROP. is LIT,
- Annunciator Panel "A" D 4, CMPTR ALARM PR TILT. is LIT.
- Annunciator Panel "A" F-1, CMPTR ALARM ROD DEV/SEQ, is LIT,
- Annunciator Panel "A" B-7. NIS PR CHNL AVE FLUX DEVIATION. is LIT,
- Annunciator Panel "A" C-7, NIS PR UP DET DEV-DEF <50%, is LIT.
- Annunciator Panel "A" B-8. NIS PR HI FLUX RATE CH I-II-III IV. is LIT, or
- Annunciator Panel "A" C-8, NIS PR LWR DET DEV-DEF <50%, is LIT.

RECOMMENDED APPROVAL:	DATE	EFFECTIVE DATE
RECOMMENDED APPROVAL - ON FILE		
APPROVAL:	DATE	
APPROVAL - ON FILE		

STEP	ACTION/EXPECTED RESPONSE	RESPONSE NOT OBTAINED
[1]__	VERIFY ONLY ONE CONTROL ROD DROPPED	GO TO 1-E-0. REACTOR TRIP OR SAFETY INJECTION.
[2]__	PLACE CONTROL ROD BANK SELECTOR SWITCH IN MANUAL	
3.__	PERFORM NOTIFICATIONS: a) Notify Shift Supervisor b) Notify Operations Manager On Call c) Notify Reactor Engineer d) Notify STA	
4.__	VERIFY REACTOR - CRITICAL AND ABOVE THE POINT OF ADDING HEAT	GO TO 1-E-0, REACTOK TRIP OR SAFETY INJECTION.
5.—	VERIFY EACH RCS LOOP AVERAGE TEMPERATURE - 541°F OR GREATER	Do either of the following within 30 minutes: • Reduce power to Mode 2 with Keff less than 1.0 OK • Increase each RCS Loop Tave to at least 541°F by diluting the RCS or reducing Turbine Loads using i-OP-2.2. Unit Power Operstion from Mode 1 *to* Mode 2.

STEP	ACTION/EXPECTED RESPONSE	RESPONSE NOT OBTAINED
	NOTE: Bank insertion limits would not normally be exceeded. unless rod operability surveillance testing was in progrecs when the rod dropped.	
6. __	VERIFY ROD BANK INSERTION LIMITS NOT EXCEEDED:	
	a) Control Rods - ABOVE INSERTION LIMIT OF 1-SC-1.7. CONTROL ROD INSERTION LIMITS VS. POWER LEVEL OR COLR	a) Enter Technical Specification 3.1.6 Action Statement.
	b) Controlling Rod Rank LO/LO-LO Limit annunciator - NOT LIT	b) Do the following until the Control Rod Bank is above the limits: • Manually withdraw Control Rods. OR • Manually reduce Turbine load **using** 1-OP-2.2. Unit Power Operation fram Mode 1 to Mode 2. OR • Manually borate the RGS.
	c) Non-controlling Banks and Shutdown Banks - FULLY WITHDRAWN	c) Fully withdraw the affected Rank.
7. __	MAINTAIN TAVE WITHIN 1.5°F OF TREF BY ADJUSTING TURBINE LOAD OR STEAM DUMPS AS NECESSARY.	

STEP	ACTION/EXPECTED RESPONSE	RESPONSE NOT OBTAINED
8.__	RECORD THE TIME THE ROD WAS DROPPED: a) Record time on Attachment 3 b) Record time in CRO log	
9.__	VERIFY ANNUNCIATOR PANEL "A" B-7, NIS PR CHNL AVE FLUX DEVIATION - NOT LIT	Do the following: a) Perform 1-PT-23, QUADRANT POWER TILT RATIO. b) Enter Technical Specification 3.2.4 Action Statement.
10.__	DETERMINE ACTIONS REQUIRED BY TECHNICAL SPECIFICATIONS: a) Affected Rod IRPI ZERO OR LESS b) Take actions required by Tech Spec 3.1.4	a) IF affected rod NOT on bottom, THEN do the following: 1) Declare the affected rod untrippable or inoperable. 2) Have the Shift Supervisor enter the following Action Statements: • Tech Spec 3.1.4 • Tech Spec 3.1.5 3) Have reactor engineer determine any required rod testing.
11.__	DETERMINE CAUSE OF DROPPED ROD	

STEP	ACTION/EXPECTED RESPONSE	RESPONSE NOT OBTAINED
12. —	CHECK REPAIRS . COMPLETED	WHEN the cause of the dropped rod is repaired. THEN GO TO Step 13.
13. —	RECORD CURRENT BOWER LEVEL: Power level: _____	
14. __	VERIFY NO NUCLEAR INSTRUMENTATION POWER RANGE NEGATIVE RATE TRIP SIGNAL · LIT	Reset negative rate trip signal.
15. —	RETRIEVE AFFECTED ROD: a) Determine maximum withdrawal rate of dropped Rod using Attachment 3 b) Retrieve dropped rod using Attachment 2, DROPPED ROD RETRIEVAL (ROD ON BOTTOM)	

STEP	ACTION/EXPECTED RESPONSE	RESPONSE NOT OBTAINED
	NOTE: The Bank Overlap Counters are located in the Rod Drive Logic Cabinet.	
16.__	VERIFY PROPER READING OF BANK OVERLAP COUNTER: a) Perform Attachment 4 b) Verify reading · CORRECT	b) Do the following: 1) Notify Instrument Department to resolve discrepancy. 2) Notify Reactor Engineer to evaluate the need to perform incore flux mapping as described by the following Technical Specifications: • 3.2.1 • 3.2.2
17.—	PLACE CONTROL ROD BANK SELECTOR SWITCK IN MANUAL	
18.__	VERIFY STEAM DUMPS NOT ARMED	Reset Steam Dump arming signal.
19.__	CHECK ALL INSTRUMENT SETPOINTS CHANGED BECAUSE OF TECHNICAL SPECIFICATION ACTION STATEMENTS - RETURNED TO NORMAL VALUES	Notify Instrument Department to reset instrument setpoints.

STEP	ACTION/EXPECTED RESPONSE	RESPONSE NOT OBTAINED
20.__	CHECK TAVE - WITHIN 1.5°F OF TREF	Restore Tave to within 1.5°F of Tref by doing the following: • Manually adjust Turbine Load using one of the following procedures: • 1 OP-2.2. Unit Power Operation from Mode 1 to Mode 2 • 1-OP-2.1. Unit Startup from Mode 2 to Mode 1 • Manually operate Control Rods. • Manually borate/dilute the RCS.
21.__	DO ONE OF THE FOLLOWING: • Place Control Rod Bank selector switch in AUTO OR • Leave Control Rod Bank selector in MANUAL - END	

- 1-E-0, REACTOR TRIP OR SAFETY INJECTION
- 1-OP-1.5. UNIT STARTUP FROM MODE 3 TO MODE 2
- 1-SC 1.7. CONTROL ROD INSERTION LIMITS VERSUS POWER LEVEL

  1-PT-23. QUADRANT POWER TILT RATIO
- Technical Specifications:

  3.1.1

  3.4.2

  3.1.4

  3.1.6

  3.2.1

  3.2.2

  3.2.4
- NE Technical Report No. 417, October 1984
- SOER 84-02. CONTROL ROD MISPOSITIONING
- CTS 02-89-2803 002
- Memo from J.O. Erb to C.G. Meyer. dated January 21. 1991
- NRC Bulletin 96 01, "Control Rod Insertion Problems" dated 3/8/96
- Virginia Power response to NRC BL 96 01, "Control Rod Insertion Problems." serial 96-135, dated 4/8/96
- ET No. NAF-970123, Rev. 0, Control Rod Withdrawal Rate Limits For Recovery Of Misaligned Control Rods During Unit Startup (Rev 5)
- 1 OP-2.1. Unit Startup From Mode 2 To Mode 1
- 1-OY-2.2. Unit Power Operation From Mode 1 To Made 2

- OE 13496. Excessive Boration For Dropped. ANO Unit 2. 11/1/2001
- DCP 01-007, Phase 2 PCS Installation and P-250 Removal - Unit 1

_____ 1 IF the dropped rod is in the controlling bank THEN position rods to place both groups in that bank at the same reading

_____ 2 Place Control Rod Bank Selector svitch In BANK SELECT Ear the bank containing the dropped rod

_____ 3 Record affected bank Group Step Counter: _____ Steps

_____ 4 Manually reset Group Step Counter for the affected group to zero.

_____ 5 Rotate the Pulse-to-Analog Converter selector switch to the AFFECTED Bank and record the affected bank reading as indicated on the Bank Position Display (located in 1-EI-CB-41B in the Instrument Rack Room): _____ Step

NOTE: When the Pulse-to-Analog Converter is pulsed to zero, then the affected bank's ROD BANK LO/LO-LO LIMIT annunciator will alarm

6 Locally reset affected bank's Pulse-to-Analog Converter In the Instrument Rack Room by doing the following

_____ a] Place the Manual/Automatic svitch in MANUAL.

_____ b) Ensure the Pulse-to-Analog Bank Selector svitch is selected to the AFFECTED bank.

_____ c) Press the Down pulse button until zero is reached as indicated an the Bank Position Display.

_____ d) Place the Manual/Automatic switch In AUTOMATIC.

_____ 7 Record the IRPI identification far the dropped rod _____

8 Do the following:

_____ a) Open all Lift Coil Disconnect switches for the AFFECTED bank, EXCEPT for the dropped rod (located behind Main Control Room Vertical Board).

_____ b) Eave a second person independently verify that all Lift Coil Disconnect switches for the AFFECTED bank except for the dropped rod, are open.

* *

CAUTION: Exceeding the maximum withdrawal rate calculated on Attachment 3 could cause fuel damage.

* *

NOTE:
- The Dropped Pod should be recovered by spacing the withdrawals evenly over the hour.
  (Example: 2 steps/hr = 1 step every 30 mins)
  (Example: 4 steps/hr = 1 step every15 mins)
- When the affected rod is withdrawn, then Annunciator Panel 'A" D-1, BOD CONTROL URGENT FAILURE, will annunciate, indicating that the affected bank lift coils are de energized
- While a dropped Control Bod is being retrieved Tave Is controlled by the Main Turbine or Steam Dump system

9 Manually withdraw the affected Control Rod by placing Rod Control lever in OUT:

_____ a) Verify the OUT direction lamp is LIT.

_____ b) Verify the affected Group Step Counter indicates outward motion.

10 **Do the following during the Pod withdrawal:**

_____ • Increase Turbine load, as required at a rate consistent with the Tave increase caused by rod withdrawal.

AND

_____ • Maintain Tave within 1.5°F of Tref by adjusting Turbine load or Steam Dumps as necessary.

* *

CAUTION: Steps 11 and 12 of this Attachment are performed to ensure proper Croup 1-Group 2 sequencing

* *

11 **IF** the dropped rod is in Group 1 of the affected bank **THEN** do the following:

_____ a) Withdraw the Control Rod until It reaches a value of one step greater than the value recorded in Step 3 of this Attachment.

_____ b) Drive the Control Rod in one step to the value recorded in Step 3 of this Attachment.

_____ 12 **IF** the dropped rod is in Group 2 of the affected bank **THEN** withdraw the Control Pod until the affected Group Step Counter reaches the value recorded In Step 3 of this attachment.

_____ 13 Record affected Group Step Counter Steps: ________________ Steps

_____ 14 Verify all rods in the affected bank are at the same height and that Rod Bottom light is **NOT** LIT. **IF** either condition is **NOT** satisfied **THEN** notify the Reactor Engineer before continuing with this procedure.

15 Do the following:

_____ a) Close all Lift Coil Disconnect switches.

_____ b) Have a second person independently verify that all lift Coil Disconnect switches art? closed

_____ 16 Reset ROD CONTROL URGENT FAILURE alarm from the control board with the Alarm Reset pushbutton.

_____ 17 Step the affected bank Control Rods in one step and verify proper Group 2-Group 1 sequencing.

_____ 18 Step the affected bank Control Rods out one step and verify proper Group 1-Group 2 sequencing.

_____ 19 Verify Pulse-to-Analog Converter reading for the AFFECTED bank as indicated on the Bank Position Display is the sane as recorded in Step 5 of this Attachment. IF NOT, TEN notify Instrument Department to resolve discrepancy.

_____ 20 Rotate the Pulse-taddog Converter selector svitch to the DISPLAY OFF position.

_____ 21 RETURN IO I-AP-1.2, DROPPED ROD. step In effect.

-END-

1. __ Time rod dropped _____

2. __ Tim rod retrieval will be performed _____

3. __ Elapsed time between Step 1 and 2 above: _____ hours

4. __ IF the elapsed time calculated in Step 3 is less than 12 hours AND Rod withdrawal rate restrictions are BOT imposed by 1-OP-2.1, Unit Startup From Mode 2 to Mode 1. THEN no maximum withdrawal rate applies.

5. __ IF the elapsed time calculated in Step 3 is less than 12 hours AND Bod withdrawal rate restrictions are imposed by 1-OP-2.1, Unit Startup From Mode 2 to Mode 1, THEN use the withdrawal rate restrictions of 1-OB-2.1.

6. __ IF the elapsed tine calculated in Step 3 is greater than 12 hours AND Rod withdrawal sate restrictions are NOT inposed by 1-OB-2.1. Unit Startup From Mode 2 to Mode I, THEN calculate the maximum withdrawal rate below

$$\text{Step Per Hour} = P^{2}$$

Where: P = fraction of rated power
(example 50% power = 0.5)

7. __ IF the elapsed time calculated in Step 3 is greater than 12 hours AND Bod withdrawal rate restrictions are imposed by 1-OP-2.1, Unit Startup From Mode 2 to Mode I. THEN use the more limiting maximum withdrawal rate as imposed by 1-OB-2.1 OB the maximum withdrawal rate calculation below

$$\text{Steps Per Hour} = P^{2}$$

Where: P = fraction of rated power
(example 50% power = 0.5)

1. ___ Record the Bank Overlap Counter value displayed in the Rod Control logic Cabinet:

   _____

2. ___ Record the step Counter value for the controlling Control Rod Bank:

   _____ Steps

3. ___ Record the difference in the values recorded in steps 1 and 2:

   _____

4. ___ Identify which Bank is controlling:

   _____ Bank

5. ___ IF D Bank is the controlling bank. THEN verify that the value recorded in step 3 is 384.

6. ___ IF C Bank is the controlling bank. THEN verify that the value recorded in step 3 is 256.

7. ___ IF B Bank is the controlling bank. THEN verify that the value recorded in step 3 is 128.

8. ___ If A Bank is the controlling bank. then verify that the value recorded in step 3 is 0.

- END -

Dominion
North Anna Power Station
JOB PERFORMANCE MEASURE EVALUATION

OPERATOR PROGRAM

INITIAL CONDITIONS

Unit 1 has experienced a large break LOCA.
The crew has completed **I-E-0,** "Reactor Trip Response" through step 12.

INITIATING CUE

You are to verify **SI** flow per step 13 of 1-E-0.

Dominion
North Anna Power Station
JOB PERFORMANCE MEASURE EVALUATION

OPERATOR PROGRAM

TASK

Verify HHSI flow.

TASK STANDARDS

Operator establishes hot leg injection flow to the core.

WA REFERENCE:

K/A 006A2.02

ALTERNATE PATH:

Yes

TASK COMPLETION TIMES

Validation Time = 17 minutes Start Time = _____
Actual Time = _____ minutes Stop Time = _____

PERFORMANCE EVALUATION

Rating [ ] SATISFACTORY [ ] UNSATISFACTORY

Candidate (Print) _____

Evaluator (Print) _____

Evaluator's Signature / **Date** _____

EVALUATORS COMMENTS

_____

_____

_____

Dominion
North Anna Power Station

JOB PERFORMANCE MEASURE
(Evaluation)

OPERATOR PROGRAM

READ THE APPLICABLE INSTRUCTIONS TO THE CANDIDATE

Instructions for Simulator JPMs

I will explain the initial conditions, and state the task to be performed. All control room steps shall be performed for this JPM, including any required communications. I will provide Initiating cues and reports on other actions when directed by you. Ensure you indicate to me when you understand your assigned task. To indicate that you have completed your assigned task return the handout sheet I provided you.

Instructions for In-Plant JPMs

I will explain the initial conditions, and state the task to be performed. All steps, including any required communications. shall be simulated for this JPM. Under no circumstances are you to operate any plant equipment. I will provide initiating cues and reports on other actions when directed by you. Ensure you indicate to me when you understand your assigned task. To indicate that you have completed your assigned task return the handout sheet I provided you.

PREREQUISITES

INITIAL CONDITIONS

Unit 1 has experienced a large break LOCA.
The crew has completed **1-E-0,** "Reactor Trip Response" through step 12

INITIATING CUE

You are to verify SI flow per step **13** of **1-E-0.**

EVALUATION METHOD

Demonstration if conducted in the sirnulator or in a laboratory (use DEMONSTRATION cues)

Verbal-visual if conducted in the station or on a dead simulator (use VERBAL-VISUAL cues)

TOOLS AND EQUIPMENT

Keys for 1 SI MOV-1 (Ke 9 1

PERFORMANCE STEPS

START TIME _____

1	Verify SI flow indicated on 1-SI-FI-1943/ 1943-1.	Procedure Step E-0 step 13

SAT [ ] UNSAT [ ]

Standards	Indicators 1 SI-1943/ 1943-1 located and flow verified to be zero.
Dead Simulator Cues	As operator verifies flow on 1 SI-1943 to zero or tell them no flow is i d. As per to ifie fl on 1 9 point to zero or tell them no flow is

Notes/Comments

2	Verify HHSI flow on 1-SI-FI-1961/ 1962/ 1963.	Procedure Step 13 RNO

SAT [ ] UNSAT [ ]

NOTE TO THE EVALUATOR	The operator should go to attachment 6 after verifying no flow on the indicators. It is permissible to tell the candidate someone else will continue with E-0 while they perform attachment 6.
Standards	Operator locates 1-SI-FI-1961, 1962, 1963 and recognizes no flow.
Dead Simulator Cues	As the operator locates flow indicators tell him the flow is zero or point to zero on the indicators.

Notes/Comments

3	Open 1 CH-MOV-1115B and 1-CH-MOV-1115D.	Procedure Step Attach. 6 step 1

SAT [ ] UNSAT [ ]

Standards	**Operator should verify 1-CH-MOV-1145B and 1-CH-MOV-1115D have red lights on.**
NOTE TO THE EVALUATOR	**These valves should already be open.**
Dead Simulator Cues	**As the operator identifies the valves tell them red light is on and green light is off.**

Notes/Comments

4	Close 1-CH-MOV-1115C and 1-CH-MOV-1115E.	Procedure Step Attach. 6 step 2

[SAT [] UNSAT [] ___

Standards	Operator should verify 1-CH-MOV-1115C and 1-CH-MOV-1115E have green lights on.
NOTE TO THE EVALUATOR	These valves should already be closed.
Dead Simulator Cues	As the operator identifies the valves tell them green light is on and red light is off.

Notes/Comments

5	Close at least one of the following: 1-CH-MOV-1289A or 1-CH-MOV-1289B.	Procedure Step Attach. 6 step 3.

SAT [] UNSAT []

Standards	Operator verifies green light on and red light off for 1-CH-MOV-1289A and 1-CH-MOV-1289B.
NOTE TO THE EVALUATOR	These valves are already closed.
Dead Simulator Cues	For each valve, tell the operator the green light is on and the red light is off.

Notes/Comments

6	Close BIT recirc valves 1-SI-TV-1884A, B, C.	Procedure Step Attach. 6 step 4

SAT [ ] UNSAT [ ]

NOTE TO THE EVALUATOR	These valves should already be closed.
Standards	Operator locates and verifies BIT recirc valves 1-SI-TV-1884A,B, and C are closed by green light on and red light off.
Dead Simulator Cues	Tell the operator green light on and red light off for each of the 3 valves as they are identified.

Notes/Comments

1

7	Open at least one valve, 1-SI-MOV-1867C or 1867D.	Procedure Step Attach. 6 step 5

SAT [ ] UNSAT [ ]

Standards	Operator takes control switches for both 1-SI-MOV-1867C/D to open. Operator calls to have valves locally opened while continuing on.
NOTE TO THE EVALUATOR	These valves are failed close to exercise alternate path. Operator should go to step 7.
Dead Simulator Cues	Tell the operator green light is still on and red light is off. Acknowledge order to locally open valves when given.

Notes/Comments

8	Verify cold leg flow on 1-SI-1943/1943-1/1961/1962/1963.	Procedure Step Attach. 6 step 7

SAT [ ] UNSAT [ ]

Standards	Operator locates 4-SI-FI-1943, 1943-, 1961, 1962, and 1963 and verifies no flow on indicators.
Dead Simulator Cues	As the operator identifies the correct flow indicator tell them flow is zero or point to zero on the indicator.

Notes/Comments

9	Turn on control power for 1-SI-MOV-1836 and take control switch to open	Procedure Step Attach 6 step 7 RNO A.

Critical Step	SAT [ ] UNSAT [ ]

NOTE TO THE EVALUATOR	This valve is failed shut to drive the operator to establish flow through 1-1869A or B.

Standards	Operator presses control power on button at 1-SI-MOV-1836 and takes control switch to open
Dead Simulator Cues	Tell the operator the control power light is on, The green valve position light is on, the red light is off.

Notes/Comments

10	Operator turns control power on and opens 1-SI-MOV-1869A or B	Procedure Step Attach 6 step 7 RNO B

Critical Step	SAT [ ] UNSAT [ ]

NOTE TO THE EVALUATOR	The operator may turn control power on and open one or both valves. This is acceptable. The keys for these valves are located outside the control room. When operator calls for the keys you will give them keys 9 and 10 that you will have in your possesion.

Standards	1-SI-MOV-1869 A and/or B is opened

Dead Simulator Cues	Tell the operator that which ever combination of correct valves they attempt to open is that red light is on and the green light is off

Notes/Comments

11	Continue attempts to align SI flow through the BIT.	Procedure Step

Demonstration Cues	Assume another operator will continue with this procedure.

Dead Simulator Cues	Assume another operator will continue with this procedure.

Notes/Comments

>>>>> END OF EVALUATION<<<<<

STOP TIME _____

SIMULATOR, LABORATORY. IN–PLANT SETUP
(If Required)

JOB PERFORMANCE MEASURE

TASK Verify SI flow Using Attachment 6 of E-O to establish hot leg injection.

CHECKLIST

_____ Recall IC 194

_____ Verify Weheaters Reset.

_____ Verify RCP's tripped

_____ Verify Switch Override/SI/MOV867D_CLOSE/ON
/MOV867C_CLOSE/ON
/MOV836_CLOSE/ON

_____ Take to freeze until exam

If needed setup is shot from IC 2
Insert Malf/RC/RC0101/SEVERITY100/ DELAY 0/ Ramp 0. And then follow setup instructions.

Instructions: 1. When paged to locally open 1867C and/or 1867D, acknowledge that you will do that as the field operator but never finish the task. The JPM is designed to use hot leg injection.

VIRGINIA POWER
NORTH ANNA POWER STATION
EMERGENCY PROCEDURE

NUMBER	PROCEDURE TITLE	REVISION
1-E-0	REACTOR TRIP OR SAFETY INJECTION (WITH SEVEN ATTACHMENTS)	32
		PAGE 1 of 22

PURPOSE

This procedure provides actions to verify proper response of the automatic protection systems following manual or automatic actuation of a Reactor trip or Safety Injection. to assess plant conditions. and to identify the appropriate recovery procedure.

ENTRY CONDITIONS

1) The following are symptoms that require a Reactor trip. if one has not occurred:
   - A Reactor protection system setpoint has been exceeded
   - A Turbine protection system setpoint with power greater than P-8 setpoint

2) The following are symptoms of a Reactor trip:
   - Any Reactor trip first out Annunciator - LIT
   - Reactor Trip and Bypass Breakers - OPEN
   - Rod Bottom Lights - LIT
   - Neutron flux - DECREASING

3) The following are symptoms that require a Reactor trip and Safety Injection. if one has not occurred:
   - Low PRZR pressure
   - High Containment pressure
   - Steamline differential pressure
   - High steamflow with lo-lo Tave
   - High steamflow with low steam pressure

4) The following are symptoms of a Reactor trip and Safety Injection:
   - Any SI first out Annunciator - LIT
   - Any Low-Head SI Pumps - RUNNING

5) Transition from another plant procedure.

RECOMMENDED APPROVAL:	DATE	EFFECTIVE DATE
RECOMMENDED APPROVAL - ON FILE		
APPROVAL:	DATE	
APPROVAL - ON FILE		

STEP	ACTION/EXPECTED RESPONSE	RESPONSE NOT OBTAINED
[1]___	VERIFY REACTOR TRIP:	IF Reactor will NOT trip. THEN GO TO 1-FR-S.l. RESPONSE TO NUCLEAR POWER GENERATION/ATWS. STEP 1.
	a) Manually Trip Reactor	
	b) Check the following: • Reactor Trip and Bypass Breakers - OPEN • Rod Bottom Lights · LIT • Neutron flux · DECREASING	
[2]___	VERIFY TURBINE TRIP:	
	a) Manually Trip Turbine	
	b) Verify all Turbine Stop Valves · CLOSED	b) Put both EHC Pumps in PTL. IF Turbine is still NOT tripped. THEN manually run back Turbine. IF Turbine cannot be run back. THEN close MSTVs and Bypass Valves.
	c) Reset Reheaters	
	d) Verify Generator Output Breaker OPEN	d) IF Generator Output Breaker does NOT open after 30 seconds. THEN manually open G-12 AND Exciter Field Breaker.

STEP	ACTION/EXPECTED RESPONSE	RESPONSE NOT OBTAINED
[3]___	VERIFY BOTH AC EMERGENCY BUSSES ENERGIZED	Do the following: a) IF no AC Emergency Bus is energized. THEN immediately restore power to at least one AC Emergency Bus. IF power cannot be restored., THEN GO TO 1-ECA-0.0, LOSS OF ALL AC POWER, STEP 1. b) Try to restore power to de-energized AC Emergency Bus using 0-AP-10, LOSS OF ELECTRICAL POWER. as time permits. Continue with Step 4.

STEP	ACTION/EXPECTED RESPONSE	RESPONSE NOT OBTAINED
[4]	CHECK SI STATUS:	
	a) Check if SI is actuated: • Low-Head SI Pumps - **RUNNING** • **Any** SI First-Out Annunciator LIT	a) Check if SI is required as indicated by any of the following: • Low PRZR pressure • High Containment pressure • Steamline differential pressure • High steamflow with either: • Lo Lo Tave OR • Low steam pressure **IF SI** required. THEN GO TO **Step 4b.** IF SI is NOT required. THEN GO TO 1-ES-0.1. REACTOR TRIP RESPONSE. STEP 1.
	b) Manually actuate SI	

STEP	ACTION/EXPECTED RESPONSE	RESPONSE NOT OBTAINED
5.__	VERIFY FEEDWATER ISOLATION: • Main Feed Reg Valves - CLOSED • Main Feed Reg Bypass Valves CLOSED • Main Feed MOVs - CLOSED • Place Standby Main Feed Pumps in PTL • Main Feed Pumps - TRIPPED • Main Feed Pump Discharge MOVs - CLOSED • Steam Generator Blowdown Trip Valves - CLOSED	Manually close valves and stop pumps.
6.__	VERIFY PHASE A ISOLATION: a) Manually initiate Phase A Isolation b) Initiate Attachment 5, VERIFICATION OF PHASE A ISOLATION	
7.__	VERIFY AFW PUMPS - RUNNING: • Motor-Driven AFW Pumps - RUNNING • Turbine-Driven AFW Pump - RUNNING	• Manually start pumps. • Manually open Turbine Driven AFW Pump Steam Supply Valves: • 1-MS TV-111A • 1-MS-TV-111B

STEP	ACTION/EXPECTED RESPONSE	RESPONSE NOT OBTAINED
8. __	VERIFY SI PUMPS - RUNNING: • Charging Pumps - RUNNING AND • Low-Head SI Pumps - RUNNING	Manually start pumps
9. __	VERIFY FOUR SERVICE WATER PUMPS - RUNNING	Manually start pumps. IF less than 4 Service Water Pumps are running. THEN ensure Unit 2 Operator initiates 0-AP-47. UNIT OPERATION DURING OPPOSITE UNIT EMERGENCY.
10. __	CHECK IF MAIN STEAMLINES SHOULD BE ISOLATED:	
	a) Check the following: • Annunciator Panel "D" E-3 LIT OR • Containment pressure - HAS EXCEEDED 18 PSIA	a) GO TO Step 13.
	b) Verify MSTVs and Bypass Valves - CLOSED	b) Manually close valves.

STEP	ACTION/EXPECTED RESPONSE	RESPONSE NOT OBTAINED
*11.	CHECK IF CDA IS REQUIRED:	
	a) Containment pressure - HAS EXCEEDER 28 PSIA	a) GO TO Step 12.
	b) Manually actuate CDA	
	c) Verify CC Pumps - TRIPPED	c) stop CC Pumps.
	d) Stop all RCPs	
	e) Verify QS Pumps - RUNNING	e) Manually start QS Pumps.
	f) Verify QS Pump Discharge MOVs - OPEN • 1-QS-MOV-101A • 1-QS MOV-101B	f) Manually open valves.
	g) On the Unit 1 Ventilation Panel. verify 1-SW TV-101A&B SERVICE WATER SUPPLY & RETURN TO RECIRC AIR FANS - SWITCH IN CLOSE POSITION	g) Place switch in CLOSE
	h) Initiate Attachment 2, VERIFICATION OF PHASE B ISOLATION	
	i) Initiate Attachment 3, PRIMARY PLANT VENTILATION ALIGNMENT	
	j) GO TO Step 13	

STEP	ACTION/EXPECTED RESPONSE	RESPONSE NOT OBTAINED
12.___	CHECK IF QUENCH SPRAY IS REQUIRED:	
	a) Verify BOTH of the following: • Containment pressure - HAS EXCEEDED 20 PSIA • All SG pressures stable or under operator control	a) GO TO Step 13.
	b) Manually start Quench Spray:	
	1) Open the following valves: • 1-QS-MOV-101A • 1-QS-MOV 101B	1) Locally open valve.
	2) Start the following pumps: • 1-QS-P-1A • 1-QS-P-1B	
	3) Open Chemical Addition Tank Outlet Valves: • 1-QS-MOV-102A • 1-QS-MOV-102B	3) Locally open valves.

STEP	ACTION/EXPECTED RESPONSE	RESPONSE NOT OBTAINED
13.__	VERIFY SI FLOW:	
	a) VERIFY HIGH-HEAD COLD LEG SI FLOW - INDICATED: • 1-SI FI-1943 • 1-SI-FI-1943-1	a) Verify High-Head flow indicated on the following: • 1-SI-PI-1961 (NQ) • 1-SI-FI-1962 (NQ) • 1 SI-FL-1963 (NQ) IF High Head flow is NOT indicated, THEN immediately initiate Attachment 6. MANUAL VERIFICATION OF SI FLOWPATH. to restore High-head SI flow, while continuing with this procedure.
	b) Check RCS pressure - LESS THAN 225 PSIG [450 PSIG]	b) GO TO Step 14.
	c) Low-Head SI Pump flow INDICATED: • 1-SI-FI-1945 • 1-SI-FI-1946	c) Manually start pumps and align valves as necessary.

4

STEP	ACTION/EXPECTED RESPONSE	RESPONSE NOT OBTAINED
14.__	**VERIFY AFW FLOW:**	
	a) **AFW** flow to all **SGs INDICATED**	a) Manually align **AFW** valves and start pumps. as necessary.
	b) Verify total **AFW** flow **GREATER THAN 340 GPM**	b) IF narrow range level is greater than 11% [22%] in amy SG. THEN control **feed** flow to maintain narrow range level **GO TO** Step 15. IE narrow range level is less than 11%[22%] in all SGs, THEN manually start pumps and align valves to establish at least **340** gpm **AFW** flow. IF **APW** flow greater than 340 gpm cannot be established. THEN **GO TO 1-FR-H.1,** RESPONSE **TO LOSS OF SECONDARY HEAT SINK. STEP 1.**

STEP	ACTION/EXPECTED RESPONSE	RESPONSE NOT OBTAINED
"15.	CHECK RCS AVERAGE TEMPERATURE: • STABLE AT 547°F OR • TRENDING TO 547°F	IF temperature is less than 547°F AND decreasing. THEN do the following: a) Stop dumping steam. b) IF cooldown continues. THEN Adjust total AFW flow to 340 gpm until at least one SG narrow range level is greater than 11% [22%]. c) IF cooldown continues. THEN close MSTVs and Bypass Valves. IF temperature is greater than 547°F and increasing. THEN do the following: • Dump steam to the Condenser OR • Dump steam using SG PORVs OR • Dump steam using Decay Heat Release Valve: a) Locally open I-MS 20, Decay Heat Release Valve Upstream Isolation Valve. b) Manually open I-MS HCV-104, Decay Heat Release Valve.

STEP	ACTION/EXPECTED RESPONSE	RESPONSE NOT OBTAINED
16.__	CHECK PRZR PORVs AND SPRAY VALVES:	
	a) Check PORVs - CLOSED: • 1-RC-PCV-1455C • 1-RC-PCV-1456	a) IF PRZR pressure less than 2335 psig, THEN manually close PORVs. IF any PORV cannot be closed. THEN manually. close the associated Block Valve. IF the Block Valve cannot be closed. THEN GO TO 1 E-1, LOSS OF REACTOR OR SECONDARY COOLANT. STEP 1.
	b) Check PRZR Spray Valves CLOSED: • 1-RC PCV-1455A • I-RC-PCV-1455B	b) IF PRZR pressure less than 2235 psig. THEN manually close valves. IF valves cannot be closed. THEN stop RCPs supplying failed Spray Valves: • 1 RC-P-1A (1 RC-PCV-1455A) • 1-RC P-1C (1-RC PCV 1455B)
	c) Check PRZR PORV Block Valves - AT LEAST ONE OPEN: • 1 RC-MOV-1536 (1-RC-PCV-1455C) • 1-RC MOV 1535 (1-RC-PCV-1456)	c) Open at least one Block Valve unless both are closed to isolate open or faulty PRZR PORVs.

STEP	ACTION/EXPECTED RESPONSE	RESPONSE NOT OBTAINED
17.__	CHECK RCP TRIP AND CHARGING PUMP RECIRC CRITERIA:	
	a) RCS subcooling based on Core Exit TCs - LESS THAN 25°F [85°F]	a) GO TO Step 18.
	b) Charging Pumps - AT LEAST ONE RUNNING AND FLOWING TO RCS	b) GO TO Step 18.
	c) Stop all RCPs	
	d) Check if Charging Pump Recirc Valves should he closed:	
	1) RCS pressure - LESS THAN 1275 PSIG 11475 PSIG]	1) GO TO Step 18.
	2) Close Charging Pump Recirc Valves: • 1-CH-MOV-1275A • 1 CH-MOV-1275B • 1 CH-MOV-1275C	2) Close 1-CH-MOV-1373. Charging Pump Recirc Header Isolation Valve.
18 __	**CHECK SGs - NOT FAULTED:** • All SG pressures - GREATER THAN 80 PSIG • All SG pressures - UNDER CONTROL OF OPERATOR	GO TO 1-E-2. FAULTED STEM GENERATOR ISOLATION. STEP 1

STEP	ACTION/EXPECTED RESPONSE	RESPONSE NOT OBTAINED
19	CHECK TEAT SG TUBES AWE NOT RUPTURED:	
	a) Level in any SG - INCREASING IN AN UNCONTROLLED MANNER	a) GO TO Step 19c.
	b) GO TO 1-E-3, STEAM GENERATOR TUBE RUPTURE. STEP 1	
	c) Check Radiation Monitors - NORMAL:	c) GO TO 1-E 3, STEAM GENERATOR TUBE RUPTURE. STEP 1.
	• SG Blowdown radiation last known valid indication	
	• Condenser Air Ejector radiation last known valid indication	
	• SG Main Steamline radiation	
	• Terry Turbine AFW Pump exhaust radiation	
20	CHECK IF RCS IS INTACT INSIDE CONTAINMENT:	GO TO 1 E-1, LOSS OF REACTOR OR SECONDARY COOLANT, STEP 1.
	• Containment pressure - NORMAL	
	• Containment Recirc Spray Sump level NORMAL	
	• Containment radiation - NORMAL	

STEP	ACTION/EXPECTED RESPONSE	RESPONSE NOT OBTAINED
21	CHECK IF SI SHOULD BE REDUCED:	
	a) RCS subcooling based on Core Exit TCs - GREATER THAN 25°F	a) GO TO Step 29.
	b) Secondary heat sink: • Total AFW flow to SGs - GREATER THAN 340 GPM OR • At least one SG narrow range level - GREATER THAN 11%	b) GO TO Step 29.
	c) RCS pressure . STABLE OR INCREASING	c) GO TO Step 29.
	d) PRZR level GREATER THAN 21%	d) Try to stabilize RCS pressure with normal PRZR spray. RETURN TO Step 21a.
22.	RESET BOTH TRAINS OF SI	
23.	STOP ALL BUT ONE CHARGING PUMP AND PUT IN AFTER-STOP	
24	CHECK RCS PRESSURE - STABLE OR INCREASING	GO TO PES-1.2. POST LOCA COOLDOWN AND DEPRESSURIZATION. STEP 1.

STEP	ACTION/EXPECTED RESPONSE	RESPONSE NOT OBTAINED

* *

CAUTION: To provide adequate Charging Pump cooling, either the Charging Pump recirc alignment must be established or Charging flow must he maintained at least 60 gpm.

* *

25. __ ISOLATE BIT:

a) Check the following:

1) 1 CH-MOV-1373, Charging Pump Recirc Header Isolation Valve · OPEN

2) Charging Pump Recirc Isolation Valves OPEN:

- 1-CH-MOV-1275A
- 1-CH-MOV 1275B
- 1 CH-MOV-1275C

a) IF Charging Pump Recirc can NOT be manually aligned. THEN do the following:

1) Verify 1-CH HCV-1311, Auxiliary Spray Valve is closed.

2) Upen Normal Charging Line Isolation Valves:

- 1-CH-HCV-1310
- 1-CH-MOV-1289A
- 1-CH-MOV-1289B

3) Open 1-CH-FCV-1122 in Manual to establish 60 gpm Charging flow.

4) Close BIT Inlet Isolation Valves:

- 1-SI-MOV-1867A
- 1-SI-MOV-1867B

5) Close BIT Outlet Isolation Valves:

- 1-SI-MOV-1867C
- 1-SI-MOV 1867D

(STEP 25 CONTINUED ON NEXT PAGE)

STEP	ACTION/EXPECTED RESPONSE	RESPONSE NOT OBTAINED
25.	ISOLATE BIT (Continued):	
		6) IF any of the following valves are open. THEN place control power on AND close: • 1 SI-MOV-1836 • 1-SI MOV-1869B • 1-SI-MOV-1869A 7) Establish and maintain greater than 60 gpm Charging flow using 1-CH-FCV 1122 in MANUAL. 8) GO TO Step 27.
	b) Close BIT Inlet Isolation Valves: • 1-SI-MOV-1867A • 1-SI-MOV-1867B	
	c) Close BIT Outlet Isolation Valves: • 1-SI-MOV 1867C • 1 SI-MOV-1867D	
	d) Verify the following valves CLOSED: • 1-SI MOV-1836 • 1 SI-MOV-1869B • 1-SI-MOV-1869A	d) Place control power on AND close valves.

STEP	ACTION/EXPECTED RESPONSE	RESPONSE NOT OBTAINED
26. __	ESTABLISH CHARGING:	
	a) Put controller €or 1-CB-FCV-1122 in MANUAL and close	
	b) Verify 1-CH-HCV-1311, Auxiliary Spray Valve · CLOSED	b) Manually close valve.
	c) Open Normal Charging Line Isolation Valves: • 1-CH-HCV-1310 • 1 CH-MOV-1289A • 1-CH MOV-1289B	
	d) Open 1-CK-PCV-1122 to establish 25 gpm charging flow	
	e) Maintain seal injection flow to each RCP between 6 gpm and 8 gpm	
27. __	CONTROL CHARGING FLOW TO MAINTAIN PRZR LEVEL	IF PRZR level continues to decrease. THEN do the following: a) Manually start Charging Pumps and align BIT as necessary. b) GO TO 1 ES-1.2. POST LOCA COOLDOWN AND DEPRESSURIZATION. STEP 1.
28. —	GO TO 1-ES 1.1, SI TERMINATION. STEP 7	
29. __	INITIATE MONITORING OF CRITICAL SAFETY FUNCTION STATUS TREES	

STEP	ACTION/EXPECTED RESPONSE	RESPONSE NOT OBTAINED
30	**CHECK FOR OUTSIDE CONTAINMENT INVENTORY LOSS:** a) Auxiliary Building radiation NORMAL: • 1-RMS-RM-154 • MGP Vent Stack A: • 1-VG-RI-179-3 • 1-VG-RI-179-1 • 1-VG-RI-179-2 b) Safeguards radiation (MGP Vent Stack B) - NORMAL: • 1-VG-RI-180-3 • 1-VG-RI-180-1 • 1-VG-RI-180-2 c) Safeguard Area Sump level annunciators - NOT LIT: • Annunciator Panel "A" C-1 • Annunciator Panel "E" F-8 d) Auxiliary Building Sump level NORMAL: • 1-DA-LI-111A • 1-DA-LL-1118	Determine cause of abnormal conditions. IF cause is a loss of RCS inventory outside Containment. THEN GO TO 1 ECA-1.2, LOCA OUTSIDE CONTAINMENT, STEP 1.

STEP	ACTION/EXPECTED RESPONSE	RESPONSE NOT OBTAINED
31.	CHECK SG LEVELS:	
	a) Narrow range level - GREATER THAN 11%	a) Maintain total AFW flow greater than 340 gpm until narrow range level is greater than 11% in at least one SG.
	b) Control feed flow to maintain narrow range level between 23% and 50%	b) IF narrow range level in any SG continues to increase in an uncontrolled manner. THEN GO TO 1-E-3. STEAM GENERATOR TUBE RUPTURE. STEP 1.
32.	RESET BOTH TRAINS OF SI	
33.	RESET ISOLATION SIGNALS:	
	a) Reset both Trains of Phase A Isolation	
	b) Reset both Trains of Phase B Isolation. if actuated	
34.	ESTABLISH INSTRUMENT AIR TO CONTAINMENT:	
	a) Verify at least one Air Compressor is supplying Instrument Air System	a) Start at least one Air Compressor.
	b) Verify Containment Instrument Air Trip Valves OPEN: • 1-IA TV-102A • 1 IA-TV-102B	b) Manually open valves.

STEP	ACTION/EXPECTED RESPONSE	RESPONSE NOT OBTAINED
35.	CHECK SECONDAKY RADIATION:	
	a) Reset AMSAC	
	b) Check Condenser Air Ejector radiation - NORMAL	b) GO TO 1-E-3. STEAM GENERATOR TUBE RUPTURE. STEP 1.
	c) Check SG Main Steamline radiation . NORMAL	c) GO TO I-E-3. STEAM GENERATOR TUBE RUPTURE. STEP 1.
	d) Verify all SG narrow range levels - GREATER THAN 23%	d) WHEN SG levels are greater than 23%. THEN do Step 35e to place SG Blowdown Radiation Monitors in service. Continue with Step 35f.
	e) Initiate Attachment 1, RESTORING BLOWDOWN RADIATION MONITORS. to place SG Blowdown Radiation Monitors in service	
	f) Check SG surface samples as required:	
	1) Open the following SG Sample Trip Valves: • 1-SS-TV 112A • 1-SS-TV-112B	
	2) Have Chemistry sample SGs	
	3) Verify radiation from SG samples - NORMAL	3) GO TO 1-E-3, STEM GENERATOR TUBE RUPTURE. STEP 1.
36.	CHECK PRT CONDITIONS - NORMAL	Evaluate abnormal conditions as a possible source of RCS inventory loss.

STEP	ACTION/EXPECTED RESPONSE	RESPONSE NOT OBTAINED

* *

CAUTION: If RCS pressure decreases in an uncontrolled manner to less than 225 psig. then the Low-Head SI Pumps should be manually restarted to supply water to the RCS.

* *

37. —	CHECK IF LOW-HEAD SI PUMPS SHOULD BE STOPPED:	
	a) Check RCS pressure:	
	1) Pressure - GREATER THAN 225 PSIG	1) GO TO 1 E-1. LOSS OF REACTOR OR SECONDARY COOLANT. STEP 1.
	2) Pressure - STABLE OR INCREASING	2) RETURN TO Step 15.
	b) Stop Low-Head SI Pumps and put in AUTO-STANDBY	
38.__	RETURN TO STEP 15	

- END

1. ___ Put all Main Feed Pumps in PTL.

2. Open one Main Feed Pump Recirc Valve:

   ___ • 1 FW-FCV-150A

   ___ • 1-FW FCV-150B

   ___ • 1-FW-FCV-150C

3. ___ Locally rack both breakers for one Kain Feed Pump to TEST using o OP-26.9. 4160-VOLT BREAKER OPERATION.

4. Close the associated Main Feed Pump Discharge MOV for pump racked to TEST:

   ___ • 1-FW-MOV-150A

   ___ • 1-FW-MOV-150B

   ___ • 1-FW-MOV-150C

5. ___ Close both Main Peed Pump breakers that were racked to TEST.

6. ___ Place control switches for 1-MS-TV-111A and 1 MS-TV-111B to the required position:

   a. 1-MS-TV-111A:

   ___ • IE 1-MS-TV-111A indicates OPEN. THEN place 1-MS-TV-111A control switch in OPEN.

   ___ • IF 1-MS-TV-111A indicates CLOSED. THEN place 1-MS-TV-111A control switch in CLOSE.

   b. 1-MS TV-111B:

   ___ • IE 1 MS-TV-111B indicates OPEN. THEN place 1-MS-TV-111B control switch in OPEN.

   ___ • IF 1-MS-TV 111B indicates CLOSED, THEN place 1-MS-TV-111R control switch in CLOSE.

   ___ c. Place control switches for 1-MS TV-111A and 1-MS-TV-111B in AUTO.

7. Do the following for the High Capacity SG Blowdown System:

   __ a. Ensure closed 1-BD-1005, SG BD Flash Tk to SG BD Flash Tk Drn Clrs Isol Vv.

   b. Close Steam Gen Blwdn Header To Recovery Tank Isol Valve(s):

   __ • 1-BD 57 (A SG)

   __ • 1 BD-58 (B SG)

   __ • 1-BD-59 (C SG)

8. __ Open SG Blowdown Trip Valves.

9. __ Check SG Blowdown radiation - NORMAL. IF NOT. THEN GO TO 1-E-3, STEM GENERATOR TUBE RUPTURE. STEP I.

1. __ VERIFY THE FOLLOWING AUTOMATIC OPERATIONS ON THE "H" SAFEGUARDS PANEL:

a) Verify Phase B isolation valves (located on the lower right corner of the panel) - CLOSED: — Manually close valves.

TRIP VALVES (TV) - CLOSED (GREEN)

__CC-105A	__CC-102A	__CC-104A 1	__CC-101A
__CC-105B	__CC-102C	__CC-104B 1	__CC-103A
__CC-105C	__CC-102E	__CC-104C 1	__IA-102A

NOTE: 1-QS-MOV 102A, CHEMICAL ADDITION TANK A OUTLET VALVE, opens following a 5-minute time delay.

b) Verify Quench Spray ALIGNED AND RUNNING: — Manually do operations as indicated.

RUNNING (RED)	OPEN (RED)
__1 QS-P-1A	__1 QS MOV 101A
	__1-QS MOV 100A
	__1-QS MOV 102A

c) Verify Service Water - ISOLATED TO CC HEAT EXCHANGERS: — Manually close valve.

CLOSED (GREEN)

__1-SW-MOV-108A

d) Verify Service Water - ALIGNED TO RECIRC SPRAY HEAT EXCHANGERS: — Manually align valves.

OPEN (RED)	OPEN (RED)	OPEN (RED)	OPEN (RED)
__1-SW-MOV-103A	__1-SW-MOV-103D	__1-SW-MOV-104A	__1-SW-MOV-104D
__1-SW-MOV-101A	__1-SW-MOV-101C	__1-SW-MOV-105A	__I-SW-MOV-105C

1. VERIFY THE FOLLOWING AUTOMATIC OPERATIONS ON THE "H" SAFEGUARDS PANEL (Continued):

NOTE: Time delays are provided for the automatic starting of Rccirc Spray Pumps.

e) Verify Recirc Spray - ALIGNED AND RUNNING — Manually do operations as indicated.

RUNNING (RED)	RUNNING (RED)	OPEN (RED)
__1-RS P-1A (6 2/3 min.T.D.)	__1-RS-P-2A (3 1/2 min.T.D.)	__1-RS MOV-156A
		__I-RS-MOV-155A

f) Verify Casing Cooling - ALIGNED AND RUNNING — Manually do operations as indicated.

RUNNING (RED)	OPEN (RED)	OPEN (RED)
__1 RS-P-3A	__1-RS-MOV lOOA	__1 RS-MOV 101B

2. __ STOP 1-IA-C-2A, A CONTAINMENT INSTRUKENT AIR COMPRESSOR. BY PRESSING OFF BUTTON

3. __ VERIFY THE FOLLOWING AUTOMATIC OPERATIONS ON THE "J" SAFEGUARDS PANEL:

a) Verify Phase B isolation valves (located on the lower right corner of the panel) - CLOSED: — Manually close valves.

TRIP VALVES (TV) - CLOSED (GREEN)

CC-100A	CC-102B	CC-104A-2	CC-101B
CC-100B	CC-102D	CC-104B-2	CC-103B
CC-100C	CC-102F	CC-104C-2	IA-102B

NOTE: 1-QS-MOV-102B, CHEKICAL ADDITION TANK B OUTLET VALVE. opens following a 5-minute time delay.

b) Verify Quench Spray - ALIGNED AND RUNNING: — Manually do operations as indicated.

RUNNING (RED)	OPEN (RED)
__1-QS-P-1B	__1-QS-MOV-101B
	__1-QS-MOV-100B
	__1-QS-MOV-102B

c) Verify Service Water - ISOLATED TO CC HEAT EXCHANGERS: — Manually close valve.

CLOSED (GREEN)

__1-SW-MOV-108B

d) Verify Service Water - ALIGNED TO RECIRC SPRAY HEAT EXCHANGERS: — Manually align valves.

OPEN (RED)	OPEN (RED)	OPEN (RED)	OPEN (RED)
__1-SW-MOV-103B	__1-SW-MOV-103C	__1-SW-MOV-104B	__1-SW-MOV-104C
__1-SW-MOV-101B	__1-SW-MOV-101D	__1-SW-MOV-105B	__I-SW-MOV 105D

3. VERIFY THE FOLLOWING AUTOMATIC OPERATIONS ON THE "J" SAFEGUARDS PANEL (Continued):

NOTE: Time delays are provided for the automatic starting of Recirc Spray Pumps.

e) Verify Recirc Spray - ALIGNED AND RUNNING — Manually do operations as indicated.

RUNNING (RED)	RUNNING (RED)	OPEN (RED)
		__1 RS-MOV-156B
__1-RS P 1B (6 2/3 min.T.D.)	__1-RS-P-2B (3 1/2 min.T.D.)	__1-RS-MQV-155B

f) Verify Casing Cooling ALIGNED AND RUNNING — Manually do operations as indicated.

RUNNING (RED)	OPEN (RED)	OPEN (RED)
__1-RS P 3B	__1 RS MOV-100B	__1 RS MOV 101A

4. __ VERIFY THE FOLLOWING AUTOMATIC OPERATIONS ON THE UNIT 1 VENTILATION PANEL:

Manually do operations as indicated.

a) Verify all Containment Air Recirc Fans - STOPPED:

__1-HV-F-1A __1-HV-F-1C __1-HV-F-1B __1-HV-F-1C

b) Verify all CRDM fans - STOPPED:

__1-HV-F-37A __1-HV-F-37B __1-HV-F-37C __1-HV-F-37D __1-HV-F-37E __1-HV-F-37F

c) Verify Service Water Supply and Return for Recirc Air Coolers CLOSED (GREEN):

CLOSED (GREEN)	CLOSED (GREEN)
__1-SW-TV-101A 1	__1-SW-TV-101A-2
__1-SW-TV-101B-1	1-SW-TV-101B-2

d) Verify Iodine Filter Banks - IN SERVICE FOR SAFEGUARDS VENTILATION:

FILTER (RED)	FILTER (RED)
(H Train)	(J Train)
__1-HV-AOD-107A-1, 2, 3, & 4	__1-HV-AOD-107B-1, 2. 3, 6 4

5. VERIFY SAFEGUARDS VENTILATION DAMPERS 1-HV-AOD-128-1. 2, 3. & 4 DIVERTED TO THE IODINE FILTER USING PCS AS FOLLOWS:

__ a) Select "By Point ID" from the "Points" pull down menu.

__ b) Type X1HV01* AND Enter.

c) Verify Point values as follows:

Place BOTH SFGDS U-l control switches for 1-HV-AOD-128-1.2.3.4 to the FILTER position.

__ • X1HV012D - PULL CLD

__ • X1HV014D - FULL CLB

__ • X1HV015D - FULL OPN

__ • X1HV017D - FIJLL OPN

6. __ VERIFY AT LEAST ONE SAFEGUARDS EXHAUST FAN RUNNING:

Manually start one fan.

- 1-HV-F-40A
- 1-HV-F-40B

NOTE: The sample pumps automatically start following a 2-minute time delay. The Low Flow Alarm is enabled after an additional 30 seconds.

7. __ VERIFY THE FOLLOWING SAMPLE PUMP RED LOW FLOW LIGHTS NOT LIT ON THE UNIT 1 RADIATION MONITORING PANEL:

Notify SRO.

NOT LIT	NOT LIT	NOT LIT	NOT LIT
__1 SW-P-5	__1-SW-P 8	__1-SW-P-6	__1-SW-P-7

8. __ VERIFY 1-SW-15 CLOSED TO SECURE SERVICE WATER DISCHARGE TO LIQUID WASTE	Do the following: a) Close 1-SW-15, Service Wtr Sply Hdr No 1 to Liq Waste sys Isol Vv. b) Secure discharge alignment using 0-CP-22.17. Discharging Service Water To Lake Anna Via The Liquid Waste System. as time permits.

1 Check Unit 1 Safeguards Area alignment by doing the following:

a) Ensure only ONE of the following Unit 1 Safeguards Area Exhaust Fans is running. Mark secured fan N/A:

_____ • 1-HV-F-40A

_____ • 1-HV-F-40B

b) Place BOTH of the following control switches far the Iodine Filter Banks in FILTER:

_____ • 1-HV-AOD-107A-1,2,3,&4, for 1-HV-FL-3A

_____ • 1-HV-AOD-107B-1,2,3,&4, for 1-HV-FL-3B

_____ c) Place BOTH control switches for 1-HV-AOD-128-1,2,3,&4, UNIT 1 SFGD AREA EXH FILTER SWITCH, in FILTER.

_____ d) Place 1-HV-HV-4, SFGD AREA SUPPLY FAN in OFF.

2 Secure Fuel Building Ventilation by doing the following:

_____ a) Stop all Fuel movement in the Fuel Building.

b) Place the following Fuel Building Supply fans in OFF:

_____ • I-HV-F-6

_____ • 1-HV-F-39

c) Place the following Fuel Building Exhaust Fans in OFF:

_____ • 1-HV-F-7A

_____ • 1-HV-F-7B

_____ d) Place BOTH control switches for 1-HV-AOD-107-1,2,3,&4, FUEL BLDG EXH FILTER SWITCH, in BYPASS.

3 Secure Decon Building Ventilation by doing the following:

_____ a) Place 1-HV-HV-5, Decon Building Supply Fan. in OFF.

_____ b) Place 1-HV-HV-6. Waste **Solids** Bldg Supply Fan. in OFF.

c) Place the following Decon Building Exhaust **Fans** in OFF:

_____ • 1-HV-F-56A

_____ • 1-HV-F-56B

_____ d) Place BOTH control switches for 1-HV-AOD-113-1,2,3,&4, DECON BLDG EXH FILTERS SWITCH. in BYPASS.

4 Secure Auxiliary Building General Ventilation by doing the following:

a) Place the following Auxiliary Building Supply Fans in OFF:

_____ • 1-HV-F-60A

_____ • 1-HV-F-60B

b) Place the following Auxiliary Building General Exhaust **Fans** in OFF:

_____ • I-HV-F-9A

_____ • 1-HV-F-9B

_____ • 1-HV-F-9C

_____ c) Place BOTH control switches for 1-HV-AOD-102-1,2,3,&4, AUX BLDG GEN FXHAUST FILTER SWITCH. in BYPASS.

5 IF Unit 2 is in Mode 5 or 6, THEN do the Following:

_____ a) Stop all core alterations and Fuel movement in the Unit 2 containment Building.

b) Place the following Containment Purge Supply Fans in OFF:

_____ • 1-HV-F-4A

_____ • 1-HV-F-4B

c) Place the following Containment Purge Exhaust Fans in OFF:

_____ • I-HV-F-5A

_____ • 1-HV-F-55

d) Close the following Purge Supply and Exhaust MOVs:

_____ • 2-HV-MOV-200A

_____ • 2-HV-MOV-2005

_____ • 2-HV-MOV-200C

_____ • 2-HV-MOV-2000

_____ • 2-HV-MOV-201

_____ ■ 2-HV-MOV-202

_____ e) Place BOTH control switches for 1-HV-AOD-104-1,2,3,&4, CONT PURGE FILTER SWITCH. in BYPASS.

6 Align Unit 2 Safeguards Ventilation by doing the following:

a) Ensure only ONE of the following Safeguards Area Exhaust Fans is running. Mark secured fan N/A:

_____ • 2-HV-F-40A

_____ • 2-HV-F-40B

_____ b) Place 2-HV-HV-4, SFGD AREA SUPPLY FAN in OFF.

_____ c) Place BOTH control switches for 2-HV-AOD-228-1,2,3,&4, SFGD AREA EXH FILTER SWITCH. in FILTER.

7 Check Auxiliary Building Iodine Filter alignment:

NOTE: Two Central Exhaust Fans are preferred to **be** in service.

a) IF BOTH Auxiliary Building Iodine Filters are in service. THEN do the following:

- Ensure at least ONE (hut NOT greater than two) of the following Central Exhaust Fans are running. Mark fan(s) secured MIA:

_____ • 1-HV-F-8A

• 1-HV-F-8B

_____ e 1-HV-F-8C

b) IF only ONL Auxiliary Building Iodine Filter **is** in service. THEN do the following:

- Ensure only ONE of the following Central Exhaust Fans is running. Mark fan(s) secured N/A:

_____ • 1-HV-F-8A

_____ • 1-HV-F-8B

_____ • 1-HV-F-8C

_____ c) Place BOTH control switches for 1-HV-AOD-103-1,2,3,&4, AUX ELOG CENTRAL CXHAUST FILTER **SWITCH.** in FILTER.

8 Verify Unit 1 Safeguards Exhaust Damper alignment. as time permits:

a) Do the following using the PCS:

_____ 1) Select "By Point ID" from the "Points" pull-down menu.

_____ 2) Type X1HV04* AND Enter.

_____ b) IF 1-HV-F-40A is running, THEN verify the following Cxhaust Damper positions:

PID/Name	Description	Value/Position
X1HV045D	1-HV-UDMP-3A DAMPER POSTN	NOT FULL CLD
X1HV046D	1-HV-UDMP-3A DAMPER POSTN	FULL OPEN
X1HV047D	1-HV-UDMP-3B DAMPER POSTN	FULL CLOSED
X1HV048D	1-HV-UDMP-3B DAMPER POSTN	NOT FULL OPEN

_____ c) IF 1-HV-F-40B is running. THEN verify the following Exhaust Damper positions:

PID/Name	Description	Value/Position
X1HV045D	1-HV-UDMP-3A DAMPER POSTN	FULL CLOSED
X1HV046D	1-HV-UDMP-3A DAMPER POSTN	NOT FULL OPEN
X1HV047D	1-HV-UDMP-38 DAMPER POSTN	NOT FULL CLD
X1HV048D	1-HV-UDMP-3B DAMPER POSTN	FULL OPEN

_____ d) IF Unit 1 Safeguards Exhaust Dampers are NOT in the correct positions, THEN consult TSC or Plant Staff for further actions.

-END-

STEP	ACTION/EXPECTED RESPONSE	RESPONSE NOT OBTAINED

* *

CAUTION: Emergency Diesel Generator Normal Stop. Emergency Stop. and Start pushbuttons are NOT located in the same places on Unit 1 and Unit 2 EDG Control Panels. Proper self-checking MUST be used when starting or stopping an EBG to ensure the desired buttons are pressed.

* *

1.__ CHECK 1J EMERGENCY DIESEL GENERATOR - UNLOADED	WHEN 1J Emergency Diesel Generator is unloaded, THEN perform Step 2. Continue with Step 3.
2.__ STOP 1J EMERGENCY DIESEL GENERATOR:	
a) SRO approval to stop 1J Emergency Diesel Generator - YES	a) WHEN SRO approval is obtained. THEN complete Step 2. GO TO Step 3.
b) Request SRO to have both trains of SI reset	
c) Place 1J Emer Diesel Generator Mode Selector Switch to MAN-REMOTE	
d) Verify Annunciator Panel H-A7 LIT	d) WHEN time permits. THEN submit a Work Request, Continue with Step 2e.
e) Simultaneously push both 1J Emer Diesel Generator Normal Stop buttons	
f) Place 1J Emer Diesel Generator Mode Selector Switch to AUTO-REMOTE	
g) Verify Annunciator Panel H-A7 - NOT LIT	g) WHEN time permits. THEN suhmit a Work Request. Continue with Step 3.

STEP	ACTION/EXPECTED RESPONSE	RESPONSE NOT OBTAINED
3.__	CHECK 1H EMERGENCY DIESEL GENERATOR - UNLOADED	WHEN 1H Emergency Diesel Generator is unloaded. THEN perform Step 4. Continue with Srep 5.
4.__	STOP 1H EMERGENCY DIESEL GENERATOR:	
	a) SRO approval to stop 1H Emergency Diesel Generator - YES	a) WHEN SRO approval is obtained. THEN complete Step 4. GO TO Step 5.
	b) Request SRO to have both trains of SI reset	
	c) Place 1H Emer Diesel Generator Mode Selector Switch to MAN REMOTE	
	d) Verify Annunciator Panel H A6 - LIT	d) WHEN time permits. THEN submit a Work Request. Continue with Step 4e.
	e) Simultaneously push both 1H Emer Diesel Generator Normal Stop buttons	
	f) Place 1H Emer Diesel Generator Mode Selector Switch to AUTO-REMOTE	
	g) Verify Annunciator Panel H-A6 - NOT LIT	g) WHEN time permits. THEN submit a Work Request. Continue with Step 5.
5.__	CHECK EITHER EMERGENCY DIESEL GENERATOR - STOPPED	WHEN either Emergency Diesel Generator is stopped. THEN continue with Step 6.

STEP	ACTION/EXPECTED RESPONSE	RESPONSE NOT OBTAINED
6.	PREPARE EMERGENCY DIESEL GENERATORS FOR OPERATION USING 1-OP 6.5A, 1H AND 1J EMERGENCY DIESEL GENERATOR POST OPERATIONAL CHECK, AS DIRECTED BY THE SRO	

- END -

1. ___ VERIFY CHARGING PUMP VALVE ALIGNMENT:

a) Charging Pump Suction From RWST Isolation Valves - OPEN:

- 1-CH-MOV-1115B
- 1 CH-MOV-1115D

a) Manually open valves. as directed by Unit SKO.

b) Charging Pump Suction From VCT Isolation Valves - CLOSED:

- 1-CH-MOV-1115C
- 1 CH-MOV 1115E

b) Manually close valves. as directed by Unit SRO.

c) Normal Charging Isolation Valves - CLOSED:

- 1-CH-MOV-1289A
- 1-CH-MOV-1289B

c) Manually close valves. as directed by Unit SRO.

2. ___ VERIFY LETDOWN ISOLATION:

a) Letdown Orifice Isolation Valves CLOSED:

- 1-CH-HCV 1200A
- 1-CH-HCV-1200B
- 1-CH-HCV-1200C

a) Manually close valves. as directed by Unit SRO.

b) Letdown Isolation Valves - CLOSED:

- 1-CH-LCV-1460A
- 1-CH-LCV 1460B

b) Manually close valves. as directed by Unit SRO.

3. ___ VERIFY LOW-HEAD SI ALIGNMENT:

a) Low-Head SI Pump Discharge Valves - OPEN:

- 1-SI-MOV 1864A
- 1 SI-MOV-1864B

a) Manually open valves. as directed by Unit SRO.

b) Low-Head SI Pump Cold Leg Injection Valves - OPEN:

- 1-SI-MOV-1890C
- 1 SI-MOV-1890D

b) Manually open valves. as directed by Unit SRO.

4. __ ALIGN MSR VENTS TO MAIN CONDENSER:

a) Open MSR Vent To Condenser:

- 1-SV TV-101A
- 1-SV-TV-101B
- 1 SV-TV 101C
- 1-SV TV-101D

b) **Close** MSR Vent To 1st Pt Htr:

- 1-SV-TV 100A
- 1-SV-TV-100B
- 1 SV-TV 100C
- 1-SV-TV-100D

5. __ VERIFY ADEQUATE HP TURBINE GLAND STEAM PRESSURE ON 1-MS-PI-131

Throttle 1-MS-MOV 106. GLAND STEM DUMP BYPASS VALVE.

6. __ VERIFY THE FOLLOWING AUTOMATIC OPERATIONS ON THE "H" SAFEGUARDS PANEL:

Manually do operations as indicated. as directed by Unit SRO.

CLOSED (GREEN)	OPEN (RED)			
__1-SI TV-1884C	__1 SI-MOV-1867C	OPEN (RED)	OPEN (RED!	CLOSED (GREEN)
__1-SI-TV 1884A	__1-SI-MOV 1867A	__1-SW-MOV 121A	__1-SW-MOV 122A	__1 SW-MOV 123A

OFF (GREEN)	CLOSED (GREEN!
__1-CV-P-3A	__1-CH MOV-1380

Trip Valve (TV) - CLOSED (GREEN)

BD- __100A	CV- __150A	DA- __100A	LM __100C	LM- __101A&C	RM __100A	SI- __100A	SS- __100A	SS- __103A	SS- __112A
BD __100C	CV- __150C	DG __100A	LM __100E	VG- __100A	RM- __100B	MS- __109A	SS- __101A	SS- __104A	
BD- __100E	SI- __ 101	LM __100A	LM- __100G	MS- __110A	CH __1204A	SI- —1859	SS- __102A	SS- __106A	RC __1519A
							SV __102-1	SV- — 102-2	

7. __ VERIFY THE FOLLOWING AUTOMATIC OPERATIONS ON THE "J" SAFEGUARDS PANEL:

Manually do operations as indicated. as directed by Unit SRO.

CLOSED (GREEN) OPEN (RED)

__1-SI-MOV-1867D OPEN (RED) OPEN (RED) CLOSED (GREEN)

__1-SI TV 1884B __1-SI-MOV-1867B __1-SW-MOV-121B __1-SW-MOV-122B __1-SW MOV-123B

OFF (GREEN) CLOSED (GREEN)

__1-CV-P-3B __1-CH MOV-1381

Trip Valve (TV) · CLOSED (GREEN)

BD-100B	CV 150B	DA 100B	LM 100D	LM 101B&D	RM-100C	si-100B	SS-100B	SS-103B	SS-112B
BD-100D	CV-150D	DG-100B	LM-100F	VG 100B	RM-100D	MS-109B	SS-101B	SS 104B	
BD-100F	HCV-1936	LM-100B	LM-100H	MS-110B	CH-1204B	SI-1842	SS 102B	SS-106B	
								SV-103	

8. __ VERIFY THE FOLLOWING VALVES ON THE POST-ACCIDENT MONITORING PANEL - CLOSED:

Close the valves

CLOSED (GREEN) CLOSED (GREEN)

__1 DA-TV 103B __1-DA-TV-103A

9. — VERIFY AUTOMATIC INITIATION OF BOTTLED FRESH AIR SUPPLY TO THE CONTROL ROOM (Located behind the Unit 1 Post-Accident Monitoring Panel):

Manually initiate bottled air dump to Control Room.

__1-HV-PI-1311

__2-HV-PI-2311

10. __ VERIFY HYDROGEN ANALYZER IN SERVICE:

- 1-HC-H_2A-101
  OR
- 2-IIC H_2A-201

Place Hydrogen Analyzer in service using 1-OF-63.2. CONTAINMENT HYDROGEN ANALYZER.

11. __ VERIFY THE FOLLOWING AUTOMATIC OPERATIONS AT THE BOTTOM OB THE UNIT 1 VENTILATION PANEL:

Manually do operations as indicated.

CLOSED (GREEN)	OFF (GREEN)	CLOSED (GREEN)
__ 1-HV-AOD-161-1	__ I-HV-F-15	__ 1-HV-AOD-160-1

12. __ VERIFY 1-HV F-41. CONTROL ROOM EMERGENCY VENTILATION FAN, AUTOMATICALLY STARTS AT THE UNIT 1 VENTILATION PANEL

Manually start 1-HV-F-41. IF 1-HV-F-41 cannot be started. THEN place 2-HV-P-41 in service on recirc using 0 OP-21.7. MAIN CONTROL ROOM AND RELAY ROOM EMERGENCY VENTILATION OPERATION.

13. __ SECIJRE WASTE GAS RELEASES:

a) Verify 1 GW-FCV-101 - CLOSED

b) Inform unaffected unit to secure Containment purge or hogging operations.

a) Manually close 1-GW-FCV 101.

14. __ VERIFY THE FOLLOWING AUTOMATIC OPERATIONS AT THE BOTTOM OF THE UNIT 2 VENTILATION PANEL:

Manually do operations as indicated.

CLOSED (GREEN)	CLOSED (GREEN)
__ 1-HV AOD-161 2	__ 1-HV-AOD 160-2

NOTE: The heat tracing automatically energizes following a 5-minute time delay.

15. __ VERIFY THE FOLLOWING AUTOMATIC OPERATIONS ON THE UNIT 2 SAFEGUARDS PANELS:

Manually do operations as indicated.

H Panel RUNNING (RED)	J Panel RUNNING (RED)
__2-SW-P-1A	__2-SW-P-1B
ON (RED)	ON (RED)
__H_2 Analyzer Heat Tracing Train A	__H_2 Analyzer Heat Tracing Train B

NOTE: Upon restoration of AC Emergency Busses. the fallowing equipment may be manually loaded as required: CRDM Fans. Containment Air Recirc Fans. and PRZR Heaters.

16. __ CHECK IF EMERGENCY DIESEL GENERATORS SHOULD BE STOPPED:

a) Verify AC Emergency Busses · ENERGIZED BY OPFSITE POWER POWER

a) Initiate 0-AP-10, LOSS OF ELECTRICAL POWER, to restore offsite power.

b) Initiate Attachment 4 for stopping Emergency Diesel Generators

17. __ SEND AN OPERATOR TU THE UNIT 1 AUXILIARY SHUTDOWN PANEL TU VERIFY 1 HV-F-42, CONTROL ROOM EMERGENCY VENTILATION FAN. AUTOMATICALLY STARTS

Locally start 1-HV-F-42. IF 1 HV-F-42 cannot be started. THEN place 2 IIV-F 42 in service on recirc using 0-OP 21.7. MAIN CONTROL ROOM AND RELAY ROOM EMERGENCY VENTILATION.

18. ___ VERIFY CONTROL ROOM ENVELOPE DIFFERENTIAL PRESSURES:

- Have an Operator check Aux Shutdown Panels Relay-Room Turbine Bldg differential pressures 20.05 inches H2O:
  - 1-HV-PDI-101 (Unit 1 Panel)
  - 2 HV-PDI-201 (Unit 2 Panel)
- Check Control Room differential pressures 20.05 inches H2O:
  - 1 HV-PDI-109, MCR/Cable Vault 1
  - 1-HV-PDI-110. MCR/Cable Spreading 1
  - 1 HV-PDI-100, CR/TB
  - 2 HV-PDI-200, CR/TB
  - 1-NV PDI-107, MCR/Cable Spreading 2
  - 1-HV PDI-108, MCR/Cable Vault 2

Adjust adjacent area ventilation, as required to restore differential pressure to 20.05 inches H2O. Reference 0-OP-21.12. CONTROL ROOM PRESSURE ENVELOPE VENTILATION TROUBLESIIOOTING. *as* applicable.

19. ___ SEND AN OPERATOR TO THE TSC EMERGENCY VENTILATION PANEL TO VERIFY THE FOLLOWING AUTOMATIC OPERATIONS:

a) 1-HV AOD-1101 · OPEN
b) 1 HV-AOD-1102 · OPEN
c) 1-HV-F-150 · RUNNING
d) 1-IN AC-150A · RUNNING
e) 1-HV-F 151 · RUNNING

Place the TSC Emergency Ventilation System in service using 1-OP-21.10, TSC EMERGENCY VENTILATION.

20. ___ NOTIFY CHEMISTRY TO ISOLATE ALL SECONDARY SYSTEM CONTINUOUS SAMPLE POINTS INCLUDING THE ON LINE CONTINUOUS MONITORING SYSTEM

21. — NOTIFY THE STA TO REVIEW 1.97 VARIABLES PROM PCS GROUP DISPLAY MENU

22. ___ VERIFY HIGH VOLUME BLOWDOWN OF SERVICE WATER RESERVOIR · SECURED

Secure high volume blowdown of Service Water Reservoir in accordance with 0 OF-49.7, High Volume Blowdown Of The Service Water Reservoir.

STEP	ACTION/EXPECTED RESPONSE	RESPONSE NOT OBTAINED
1.___	OPEN CHARGING PUMP SUCTION FROM RWST ISOLATION VALVES: • 1-CH-MOV-1115B • 1-CH-MOV-1115D	Locally open at least one valve. WHEN at least one valve is open. THEN GO TO Step 2.
2.___	CLOSE CHARGING PUMP SUCTION FROM VCT ISOLATION VALVES: • 1-CH-MOV-1115C • 1-CH-MOV-1115E	Locally close at least one valve before continuing with Step 3.
3.___	CLOSE AT LEAST ONE NORMAL CHARGING ISOLATION VALVE: • 1-CH-MOV 1289.4 • 1 CH-MOV 1289B	Place 1-CH-FCV-1122 in MANUAL and close.
4.___	CLOSE BIT RECIRC VALVES: • 1-SI-TV-1884A • 1-SI-TV 1884B • 1-SI TV-1884C	IF both of the following valves will NOT close. THEN locally close 1-SI-71. BIT Outlet Hdr To Boric Acid Tank Isol Valve. • 1-SI-TV-1884.4 • 1-SI-TV-1884B Continue with Step 7.
5.___	OPEN AT LEAST ONE BIT OUTLET VALVE: • 1 SI MOV 1867C • 1 SI-MOV-1867D	Locally open at least one valve while continuing with Step 7.
6.___	OPEN AT LEAST ONE BIT INLET VALVE: • 1-SI-MOV-1867A • 1-SI-MOV-1867B	Locally open at least one valve while continuing with Step 7.

STEP	ACTION/EXPECTED RESPONSE	RESPONSE NOT OBTAINED
7.	VERIFY COLD LEG SI FLOW INDICATED: • 1-SI-FI-1943 • 1-SI-FI-1943-1 • 1-SI-FI-1961 (NQ) • 1 SI-FI-1962 (NQ) • 1-SI-FI-1963 (NQ)	IF Cold Leg SI flow is NOT indicated, THEN do the following: a) Turn on control power to AND open 1-SI-MOV-1836, SI COLD LEG INJECTION ALTERNATE HDR ISOLATION. b) IF 1-SI-MOV-1836 will NOT open. THEN turn on control power to AND open one of the following valves (Key Required): • 1-SI-MOV-1869B, SI Hot Leg Injection Normal Header Isolation • 1-SI-MOV-1869A, SI Hot Leg Injection Alternate Header Isolation c) Continue attempts to align SI flow through the BIT while continuing with this procedure. IF SI flow through the BIT is established. THEN ensure the following valves are closed AND turn off control power: • 1-SI-MOV-1836 • 1-SI-MOV-1869B • 1-SI-MOV-1869A
8.	RETURN TO PROCEDURE AND STEP IN EFFECT	

END

Continuous Action Page Steps are listed on the back of this page.

NOTE: The following conditions support or indicate natural circulation flow.

NATURAL CIRCULATION VERIFICATION

- RCS subcooling based on Core Exit TCs - GREATER THAN 25°F
- SG pressures - STABLE OR DECREASING
- RCS Hot Leg temperatures - STABLE OR DECREASING
- Core Exit TCs - STABLE OR DECREASING
- RCS Cold Leg temperatures AT SATURATION TEMPERATURE FOR SG PRESSURE

PCS Natural Circulation Display: Select from Group Display Menu

RED PATH SUMMARY

a. SUBCRITICALITY - Power Range greater than 5%
[Gamma-Metrics Wide-Range Power Level greater than 5 x 10]

b. CORE COOLING - Core Exit TCs greater than 1200°F
OR
- RCS Subcooling based on TCs less than 25°F [75°F] AND
- Core Exit TCs greater than 700°F AND
- RVLIS Full Range less 48% with no RCPs running

c. HEAT SINK - Marrow Range level in ALL SGs less than 11% [22%] AND total Feedwater flow less than 340 gpm

d. INTEGRITY - Cold leg temperature decrease greater than 100°F in last 60 minute minutes AND
ALL RCS Cold leg temperatures less than Curve Limit

e. CONTAINMENT - Containment pressure greater than 60 psia

Continuous Action Page Steps are listed on the back of this page.

NOTE: The following conditions support or indicate natural circulation flow.

NATURAL CIRCULATION VERIFICATION

- RCS subcooling based on Core Exit TCs - GREATER THAN 25°F
- SG pressures - STABLE OR DECREASING
- RCS Hot Leg temperatures STABLE OR DECREASING
- Core Exit TCs - STABLE OR DECREASING
- RCS Cold Leg temperatures - AT SATURATION TEMPERATURE FOR SC PRESSURE

PCS Natural Circulation Display: Select from Group Display Menu

RED PATH SUMMARY

a. SUBCRITICALITY Power Range greater than 5% [Gamma-Metrics Wide-Range Power Level greater than 5 x 10]

b. CORE COOLING Core Exit TCs greater than 1200°F
OR
- RCS Subcooling based on TCs less than 25°F [75°F] AND
- Core Exit TCs greater than 700°F AND
- RVLIS Full Range less 48% with no RCPs running

c. HEAT SINK Narrow Range level in ALL SGs less than 11% [22%] AND total Feedwater flow less than 340 gpm

d. INTEGRITY - Cold leg temperature decrease greater than 100°F in Last 60 minute minutes AND
ALL RCS Cold leg temperatures less than Curve Limit

e. CONTAINMENT Containment pressure greater than 60 psia

Continuous Action Page Steps are listed on the back of this page.

NOTE: The following conditions support or indicate natural circulation flow.

NATURAL CIRCULATION VERIFICATION

- RCS subcooling based on Core Exit TCs - GREATER THAN 25°F
- SG pressures - STABLE OR DECREASING
- RCS Hot Leg temperatures - STABLE OR DECREASING
- Core Exit TCs - STABLE OR DECREASING
- RCS Cold Leg temperatures AT SATURATION TEMPERATURE FOR SG PRESSURE

PCS Natural Circulation Display: Select from Group Display Menu

RED PATH SUMMARY

a. SUBCRITICALITY - Power Range greater than 5%
[Gamma-Metrics Wide-Range Power Level greater than 5 x 10⁻⁶]

b. CORE COOLING Core Exit TCs greater than 1200°F
OR
- RCS Subcooling based on TCs less than 25°F [75°F] AND
- Core Exit TCs greater than 700°F AND
- RVLIS Pull Range less 48% with no RCPs running

c. KEAT SINK - Narrow Range level in ALL SGs less than 11%[22%] AND total Feedwater flow less than 340 gpm

d. INTEGRITY - Cold leg temperature decrease greater than 100°F in last 60 minute minutes AND
ALL RCS Cold leg temperatures less than Curve Limit

e. CONTAINMENT - Containment pressure greater than 60 psia

CONTINUOUS ACTION PAGE FOR 1-E-0

1. ADVERSE CONTAINMENT CRITERIA
   - IF either of the following conditions exist. THEN use setpoints in brackets:
     - 20 psia Containment pressure. OR
     - Containment radiation has reached or exceeded 10^5 R/hr (70% on High Range Recorder).

2. SI FLOW CRITERIA
   IF SI is actuated AND Nigh-Head Cold Leg SI flow is NOT indicated. THEN initiate Attachment 6, MANUAL VERIFICATION OF SI-FLOWPATH.

3. RCP TRIP CRITERIA
   IF both conditions listed below exist, THEN trip all RCPs:
   - Charging Pumps - AT LEAST ONE RUNNING AND FLOWING TO RCS. AND
   - RCS subcooling based on Core Exit TCs - LESS THAN 25°F [85°F].

4. CHARGING PUMP RECIRC PATH CRITERIA
   - IF RCS pressure decreases to less than 1275 psig [1475 psig] AND RCPs tripped. THEN close Charging Pump Recirc Valves.
   - IF RCS pressure increases to 2000 psig. THEN open Charging Pump Recirc Valves.

5. ECST LEVEL CRITERIA
   WHEN the ECST level decreases to 40%. THEN initiate 1 AP 22.5. LOSS OF EMERGENCY CONDENSATE STORAGE TANK 1-CN-TK-1.

6. CDA ACTUATION CRITERIA
   IF Containment pressure exceeds 28 psia. THEN do the following:

   a) Manually actuate CDA.
   b) Ensure CC Pumps STOPPED.
   c) Stop all RCPs.
   d) Ensure QS Pumps RUNNING.
   e) Ensure QS Pump Discharge MOVs OPEN.
   f) Initiate Attachment 2. VERIFICATION OF PHASE B ISOLATION.
   g) Initiate Attachment 3. PRIMARY PLANT VENTILATION ALIGNMENT.

7. CONTAINMENT RECIRC MODE CRITERIA
   To prevent possible radioactive release from the RWST. VCT level should be maintained greater than 12%.

8. RCP CRITERIA
   Seal injection flow should be maintained to all RCPs.

9. REACTIVITY CONTROL CRITERIA
   An Operator should be sent to locally close and lock 1-CH-217. PG to Blender Isolation Valve.

Dominion
North Anna Power Station
JOB PERFORMANCE MEASURE EVALUATION

OPERATOR PROGRAM

INITIAL CONDITIONS

Unit 1 was at 100% steady-state operation prior to the event.

Reactor **Coolant** System pressure is 2,200 psig and **slowly** decreasing

PWZR HIGH-LOW PRESSURE annunciator (1B-F7) has alarmed.

INITIATING CUE

You are requested to respond to the event in accordance with 1-AP-44, "Loss of Reactor Coolant System Pressure." Immediate actions are to be performed from memory.

Dominion
North Anna Power Station
JOB PERFORMANCE MEASURE EVALUATION

OPERATOR PROGRAM

TASK

Respond to a loss of Reactor Coolant System pressure (1-AP-44).

TASK STANDARDS

The reactor is tripped and I-RC-P-IC **RCP** is secured.

WA REFERENCE:

K/A 010A2.02

ALTERNATE PATH:

Yes

TASK COMPLETION TIMES

Validation Time = 7 minutes
Actual Time = _____ minutes

Start Time = _____
Stop Time = _____

PERFORMANCE EVALUATION

Rating [ ] SATISF CTORY [ ] UNSATISF CTOR`

Candidate (Print) _____

Evaluator (Print) _____

Evaluator's Signature / Bate _____

EVALUATOR'S COMMENTS

_____

_____

_____

Dominion
North Anna Power Station

JOB PERFORMANCE MEASURE
(Evaluation)

OPERATOR PROGRAM

READ THE APPLICABLE INSTRUCTIONS TO THE CANDIDATE

Instructions for **Simulator JPMs**

I will explain the initial conditions, and state the task to be performed. All control room steps shall be performed for this JPM, including any required communications. I will provide initiating cues and reports on other actions when directed by you. Ensure you indicate to me when you understand your assigned task. To indicate that you have completed your assigned task return the handout skeet I provided you.

Instructions for In-Plant **JPMs**

I will explain the initial conditions, and state the task to be performed. All steps, including any required communications, shall be simulated for this JPM. Under no circumstances are you to operate any plant equipment. I will provide initiating cues and reports on other actions when directed by you. Ensure you indicate to me when you understand your assigned task. To indicate that you have completed your assigned task return the handout sheet I provided you.

INITIAL CONDITIONS

Unit 1 was at 100% steady-state operation prior to the event.

Reactor Coolant System pressure is 2,200 psig and slowly decreasing.

PRZR HIGH-LOW PRESSURE annunciator (1B-F7) has alarmed.

INITIATING CUE

You are requested to respond to the event in accordance with 1-AP-44, "Loss of Reactor Coolant System Pressure."

EVALUATION METHOD

Demonstration if conducted in the simulator or in a laboratory (use DEMONSTRATION cues)

Verbal-visual if conducted in the station or on a dead simulator (use VERBAL-VISUAL cues)

TOOLS AND EQUIPMENT

None

PERFORMANCE STEPS

STARTTIME _____

1	Verify that the pressurizer power-operated relief valves (1-RC-PCV-1455C and 1456) are closed.	Procedure Step 1

SAT [ ] UNSAT [ ]

NOTE TO EVALUATOR	The steps up through tripping the RCP are immediate actions.

Standards	Pressurizer PORV Control Switches located and valves verified closed.
Dead Simulator Cues	When correct switch located tell the operator the PORV's are closed or tell them green light is on and red light is off for each PORV. PORV's are already closed.

Notes/Comments

2	Determine if the master pressure controller has failed.	Procedure Step 2

SAT [ ] UNSAT [ ]

Standards	Operator determines master pressure controller operating properly.
Dead Simulator Cues	Master pressure controller is operating correctly or tell the operator controller demand is 25% and decreasing in response to lowering pressure.

Notes/Comments

3	Determine if the pressurizer spray valves(1-RC-PCV-1455A and 1455B) are closed.	Procedure Step 3

SAT [ ] UNSAT [ ]

Dead Simulator Cues	1-RC-PCV-1455A is closed or tell the operator demand indicates zero. 1-RC-1455B is open or tell the operator demand is 100%.

Notes/Comments

4	**Close the "B" pressurizer spray valve.**	**Procedure Step 3 RNO**

Critical Step	SAT [ ] UNSAT [ ]

Standards	Controller for 1-RC-PCV-1455B is in MANUAL, and the LOWER push-button is depressed to reduce controller demand.
Dead Simulator Cues	1-RC-PCV-1455B does not close or tell the operator demand on 1-RC-PCV-1455B is still at 100%.
NOTE TO EVALUATOR	The following 4 steps are the immediate actions of 1-E-0.

Notes/Comments

5	**Take the reactor trip switch to trip and verify the reactor tripped.**	**Procedure Step 3 RNO for step 3 - E-0 step 1**

Critical Step	SAT [ ] UNSAT [ ]

Standards	Reactor trip switch is used to open the reactor trip breakers.
Dead Simulator Cues	Tell the operator the reactor is tripped or tell them Reactor trip breaker light indication is green. All rod bottom lights are on and IRPI's are at zero. Neutron flux is decreasing.

Notes/Comments

6	Verify turbine tripped.	Procedure Step E-0 step 2

Standards	Turbine stop valves closed, reheaters reset, and generator output breaker open.

Dead Simulator Cues	Tell the operator all turbine stop valves are closed, reheaters reset, 2nd green lit is on and red light is off for the generator output breaker.

Notes/Comments

7	Verify power to both AC emergency buses.	Procedure Step E-0 step 3

SAT [ ] UNSAT [ ]

Standards	Voltage verified on H and J emergency buses.

Dead Simulator Cues	Tell the operator bus voltage on both emergency buses is between 4150 and 4200 volts.

Notes/Comments

8	Verify SI has not actuated and is not needed.	Procedure Step E-0 step 4

SAT [ ] UNSAT [ ]

Standards	No first outs verified and low head SI pumps are not running
Demonstration Cues	Once the examinee has verified that SI has not actuated, give the following cue: Assume another operator will continue with E-0. You are to continue with 1-AP-44.
Dead Simulator Cues	Green light on and red light off of low head SI pumps. No SI first out annunciators are lit. Once the examinee has verified that Si has not actuated, give the following cue: Assume another operator will continue in E-0. You are to continue with 1-AP-44.

Notes/Comments

9	Stop 1-RC-P-1C.	Procedure Step AP 44 Step 3 RNO

Critical Step SAT [ ] UNSAT [ ]

Standards	Control switch for 1-RC-P-1C is taken to stop.
Dead Simulator Cues	Tell the operator C RCP is stopped or tell them green light is on and red light is off. RCS flow in the C loop is trending to zero.

Notes/Comments

10	Verify all pressurizer heaters on.	Procedure Step 4

SAT [ ] UNSAT [ ]

NOTE TO EVALUATOR	The examinee will now need to have 1-AP-44 in hand.

NOTE TO THE EVALUATOR	When performed on the simulator the examinee may or may not have to turn on back up heaters depending on pressure. Pressure is dependent on how well the unit is stabilized in 1-E-0.

Standards	Verify all pressurizer heaters are on.

Dead Simulator Cues	Tell the operator all heaters are on or tell them all heater red lights are on.

Notes/Comments

11	Verify 1-CH-HCV-1311 closed.	Procedure Step 5

SAT [ ] UNSAT [ ]

Standards	Operator locates indication and determines 1-CH-HCV-1311 is closed.

Dead Simulator Cues	Tell the operator 1-CH-HCV-1311 is closed or tell them green light is on and red light is off.

Notes/Comments

12	Determine if the pressurizer safety valves and PORVs are open.	Procedure Step 6

SAT [ ] UNSAT [ ]

Standards	Operator locates indication and determines PORV's and safety valves are closed.

Dead Simulator Cues	All pressurizer safety valves and PORVs are closed or tell the operator green light on and red light off for PORV's. Tell them all pressurizer safety and PORV temperatures indicate normal.

Notes/Comments

13	Determine if Reactor Coolant System pressure is stable or increasing.	Procedure Step 7

SAT [ ] UNSAT [ ]

Standards	Operator checks RCS pressure trend.

Dead Simulator Cues	Reactor Coolant System pressure is slowly increasing.

Notes/Comments

[illegible]	Procedure Step 8

SAT [ ] UNSAT [ ]

Demonstration Cues	Assume another operator will continue with the procedure.

Dead Simulator Cues	Assume another operator will continue with the procedure.

Notes/Comments

>>>>> END OF EVALUATION <<<<<

STOP TIME _____

SIMULATOR, **LABORATORY, IN--PLANT SETUP**
(If Required)

SIMULATOR SETUP

JOB PERFORMANCE MEASURE
R634

TASK

Respond to a loss of Reactor Coolant System pressure (1-AP-44).

CHECKLIST

_____ **Recall IC 195**

_____ **Ensure malfunction RC4602, time delay = 0, ramp = 0, degradation = 1.0%**

Ensure Controller Override CRCPCV455B_RAISE=ON

_____ **Place simulator in RUN until the low-pressure alarm is received**

_____ **Place the simulator in FREEZEIf needed recall IC 2 and follow setup instructions above.**

VIRGINIA POWER
NORTH ANNA POWER STATION
ABNORMAL PROCEDURE

NUMBER	PROCEDURE TITLE	REVISION
1-AP-44	LOSS OF REACTOR COOLANT SYSTEM PRESSURE (WITH ONE ATTACHMENT)	16
		PAGE 1 of 4

PURPOSE

To provide operator guidance in the event of a decreasing Pressurizer pressure. but not necessarily a decreasing Pressurizer level

ENTRY CONDITIONS

This procedure is entered when the following conditions exists:

- Annunciator Response "B" Panel F-7, PRZR HIGH-LOW PRESSURE
- Annunciator Response "C" Panel D-1, PRZR SAFETY VALVE OR PORV OPEN
- Reactor Coolant System Pressure less than 2335 psig and PZR PORV open

RECOMMENDED APPROVAL:	DATE	EFFECTIVE DATE
RECOMMENDED APPROVAL - ON FILE		
APPROVAL:	DATE	
APPROVAL - ON FILE		

STEP	ACTION/EXPECTED RESPONSE	RESPONSE NOT OBTAINED

* *

CAUTION: If RCS pressure is less than 1890 psig any time during this procedure, then 1-E-0. REACTOR TRIP OR SAFETY INJECTION. must be initiated while continuing with this procedure.

* *

[1]__	CHECK PRZR PORVs - CLOSED: • 1-RC-PCV-1455C • 1-RC-PCV-1456	Close the PORVs. IF any PORV cannot be closed, THEN manually close the associated Block Valve. IF any PORV is open AND the associated Block Valve will not close. THEN GO TO 1 E-0, REACTOR TRIP OR SAFETY INJECTION. while continuing with this procedure.
[2]__	CHECK MASTER PRESSURE CONTROLLER CONTROLLING PROPERLY	Put the controller in MANUAL and adjust as required to stabilize and restore pressure.
[3]__	CHECK PRZR SPRAY VALVES - CLOSED: • 1 RC-PCV-1455A • 1-RC-PCV-1455B	Manually close valves. IF PRZR Spray Valve is open AND will not close, THEN do the following: a) GO TO 1 E-0, REACTOR TRIP OR SAFETY INJECTION, while continuing with this procedure. b) Stop the associated RCP: • 1-RC-P-1A for 1-RC-PCV-1455A • 1 RC-P-1C for I-RC-PCV-1455B

STEP	ACTION/EXPECTED RESPONSE	RESPONSE NOT OBTAINED
4.__	VERIFY ALL PRZR HEATERS - ENERGIZED	Manually energize PRZR heaters as required to maintain desired PRZR pressure.
5.__	CHECK 1-CH-HCV-1311. AUXILIARY SPRAY VALVE - CLOSED	
6.__	CHECK STATUS OF PRZR SAFETY VALVES AND PORVS:	
	a) PRZR Safety Valves - CLOSED	a) Notify SRO of open PRZR Safety Valves.
	b) PRZR PORVS - CLOSED OR ISOLATED	b) IF the Block Valve for an open PRZR PORV cannot be closed. THEN send an operator to locally place the NITROGEN and PRZR PWR RV Isolation switches for the affected PORV in DISABLE (Located in Unit 1 Emergency Switchgear Room, behind the Auxiliary Shutdown Panel in Appendix R Cabinet key required).

STEP	ACTION/EXPECTED RESPONSE	RESPONSE NOT OBTAINED
7.__	VERIFY RCS PRESSURE STABLE OR INCREASING	Evaluate for other causes of decreasing pressure. IF a PRZR Spray Valve is failed open. THEN evaluate securing additional RCPs to reduce back flow to spray from the other loops: a) Stop the following running RCP: • 1-RC-P-1A OR • 1-RC-P 1C b) IF RCS pressure continues to decrease. THEN stop 1-RC-P 1B. RETURN TO Step 1.
8.—	VERIFY RCS PRESSURE NORMAL	Adjust PRZR heaters or spray as required to restore pressure.
9.—	EVALUATE MALFUNCTION: a) Determine cause of the malfunction b) Submit Work Requests	
10.__	RESTORE NON-AFFECTED EQUIPMENT TO NORMAL OPERATION	
11.__	REFER TO TECIINICAI, SPECIFICATIONS FOR ANY INOPERATIVE EQUIPMENT	

- END

- UFSAR 5.2.2.1
- UFSAR 15.2.12
- 1-E 0, REACTOR TRIP OR SAFETY INJECTION
- INPO Significant Event Notification SEN 230 (Rev 16)

Dominion
North Anna Power Station
JOB PERFORMANCE MEASURE EVALUATION

OPERATOR PROGRAM

INITIAL CONDITIONS

Unit1 is in mode 4.

Annunciator 1E-A8, RHR SYSTEM LOW FLOW, has just lit.

Residual Heat Removal System flow indication has just indicated zero.

Pressurizer bevel, VCT bevel, and Containment Sump Level are all Stable

INITIATING CUE

You are requested to respond to a loss of the Residual Heat Removal System and lo restore residual heat removal flow to approximately 3,200 gpm using 1-AP-11.

Dominion
North Anna Power Station
JOB PERFORMANCE MEASURE EVALUATION

OPERATOR PROGRAM

10820

TASK

Running WHR pump has a sheared shaft

TASK STANDARDS

1-RH-P-1B was stopped and 1-RH-P-1A was started with flow restored to 3000-4000 gpm.

K/A REFERENCE:

K/A 005A2.03

ALTERNATE BATH:

Yes

TASK COMPLETION TIMES

Validation Time = 9 minutes
Actual Time = _____ minutes

Start Time = _____
Stop Time = _____

PERFORMANCE EVALUATION

Rating [ ] SATISFACTORY [ ] UNSATISFACTORY

Candidate (Print) _____

Evaluator (Print) _____

Evaluator's Signature / Bate _____

EVALUATOR'S COMMENTS

_____

_____

_____

Dominion
North Anna Power Station

JOB PERFORMANCE MEASURE
(Evaluation)

OPERATOR PROGRAM

10820

READ THE APPLICABLE INSTRUCTIONS TO THE CANDIDATE

Instructions *for* Simulator JPMs

I will explain the initial conditions, and state the task to be performed. All control room steps shall be performed for this JPM, including any required communications. I will provide initiating cues and reports on other actions when directed by you. Ensure you indicate to me when you understand your assigned task. To indicate that you have completed your assigned task return the handout sheet I provided you.

Instructions for In-Plant JPMs

I will explain the initial conditions, and state the task to be performed. All steps, including any required communications, shall be simulated for this JPM. Under no circumstances are you to operate any plant equipment. I will provide initiating cues and reports on other actions when directed by you. Ensure you indicate to me when you understand your assigned task. To indicate that you have completed your assigned task return the handout sheet I provided you.

INITIAL CONDITIONS

Unit1 is in mode 4.

Annunciator 1E-A8, RHR SYSTEM LOW FLOW, has just lit.

Residual Heat Removal System flow indication has just indicated zero.

Pressurizer Level, VCT Level, and Containment Sump Level are all Stable

INITIATING CUE

You are requested to respond to a loss of the Residual Heat Removal System and to restore residual heat removal flow to approximately 3,200 gpm using 1-AP-11.

EVALUATION METHOD

Demonstration if conducted in the simulator or in a laboratory (use DEMONSTRATION cues)

Verbal-visual if conducted in the station or on a dead simulator (use VERBAL-VISUAL cues)

TOOLS AND EQUIPMENT

None

PERFORMANCE STEPS

START TIME _____

1	Check if Reactor Coolant System level is decreasing.	Procedure Step 1
		SAT [ ] UNSAT [ ]

Standards	Pressurizer level, RCS makeup rate, containment sump and PDTT pumping frequency are verified unchanged.
Dead Simulator Cues	No change is indicated tor pressurizer level RCS makeup rate containment sump or ..... T pumping frequency.

Notes/Comments

2	Verify that the Residual Heat Removal System isolation valves are open.	Procedure Step 5 A

SAT [ ] UNSAT [ ]

Standards	RHR inlet valves 1-RH-MOV-1700 and 1701 are verified open.
Dead Simulator Cues	1-RH-MOV-1700 ... 1701 red lights are lit and green lights are NOT lit.

Notes/Comments

3	**Verify that at least one Residual Heat Removal System outlet valve is open.**	Procedure Step 5 B

Standards	RHR outlet valve 1-RH-MOV-1720B is verified open.
Dead Simulator Cues	1-RH-MOV-1720B red light is lit and green light is NOT lit.
Bead Simulator Cues	**1-RH-MOV-1720A** red **light is** NOT lit **and green light** is lit.

Notes/Comments

4	Check that at least one residual heat removal pump is running.	Procedure Step 6 SAT [] UNSAT []

Standards	1-RH-P-1B is verified running with low amps, 1-RH-P-1A is verified not running.
Dead Simulator Cues	1-RH-P-1B has red light on and indicates 10 amps. 1-RH-P-1A red and amber lights are NOT lit, green light is lit, and the amperage reading is 0 amps.

Notes/Comments

5	If the other RHR pump is available, stop any degraded residual heat removal pump.	Procedure Step 6 RNO

Critical Step	SAT [] UNSAT [] 1

Standards	Control switch for 1-RH-P-1B is placed in STOP.
Dead Simulator Cues	1-RH-P-1B red light is NOT lit. green light is lit, and the amperage reading is 0 amps.

Notes/Comments

6	If a degraded residual heat removal pump is running and the other pump is not available, go to step 7.	Procedure Step RNO C

SAT [ ] UNSAT [ ]

Standards	Operator proceeds to step 6. CRNO.
Demonstration Cues	1-RH-P-1A is available for use.
Dead Simulator Cues	1-RH-P-1A is available for use.

Notes/Comments

7	If electrical power is available, do the following.	Procedure Step 6 RNO C.

SAT [ ] UNSAT [ ]

Standards	4160-volt emergency bus 1H is verified energized
Dead Simulator Cues	4160-volt emergency bus 1H indicates 4300 volts and 60 Hz.

Notes/Comments

8	Manually close Residual Heat Removal System flow control valves 1-RH-FCV-1605 and 1-RH-HCV-1758.	Procedure Step 6 RNO C1

Critical Step	SAT [ ] UNSAT [ ]

Standards	1-RH-HCV-1758 control knob is rotated in the counter-clockwise direction until its output demand indicates zero.
	1-RH-FCV-1605 controller **MANUAL** pushbutton is depressed, then **DECREASE** button is depressed until the controller output demand indicates zero.
Dead Simulator Cues	**1-RH-HCV-1758 demand is zero and 1-RH-FCV-1605 demand is zero.**

Notes/Comments

9	If an RHR pump was stopped due to air entrainment, locally vent both RHR pumps.	Procedure Step 6 RNO C2

SAT [ ] UNSAT [ ]

Standards	Operator proceeds to step 6.C.3 RNO.

Notes/Comments

10	If both RHR pumps are stopped, start one RHR pump.	Procedure Step 6 RNO C3

Critical Step	SAT [ ] UNSAT [ ]

Standards	Control switch for the residual heat removal pump 1-RH-P-1A is placed in START.
Dead Simulator Cues	1-RH-P-1A red light is lit and green light is NOT lit, and the amperage reading is 37.

Notes/Comments

11	**Restore Residual Heat Removal System** flow.	**Procedure Step 6** RNO C4

[Critical step	SAT [ ] UNSAT [ ]

Standards	1-RH-FCV-1605 controller **INCREASE** button is depressed
	1-RH-FCV-1758 control knob is rotated in the clockwise direction to stabilize temperature if needed.
	RHR flow is verified indicating approximately 3,300 gpm (3,000 - 4,000).

Dead Simulator Cues	**Residual heat removal flow indicates 3,300 gpm.**

Notes/Comments

12	If an RHR pump has been started, go to step 7.	Procedure Step 6 RNO C5

SAT [ ] UNSAT [ ]

Standards	Operator proceeds to step 7

Notes/Comments

13	Verify that the RHR system is normal	Procedure Step 7

SAT [ ] UNSAT [ ]

Standards	RHR flow and motor amps are verified normal, RCS temperature is verified stable.
Dead Simulator Cues	RHR flow is stable at 3,300 gpm, motor amps are stable at 37, RCS temperature is stable at 310.°F

Notes/Comments

14	Check service water to CC heat exchangers.	Procedure Step _____

SAT [ ] UNSAT [ ]

3	Operator states that the task is complete
Demonstration Cues	Assume that another operator will complete the procedure
Dead Simulator Cues	Assume that another operator will complete the procedure

Notes/Comments

>>>>> END OF EVALUATION <<<<<

STOP TIME _____

SIMULATOR, LABORATORY, IN--PLANT SETUP
(If Required)

SIMULATOR SETUP

JOB PERFORMANCE MEASURE
10820

TASK

Running RHR pump has a sheared shaft

CHECKLIST

_____ Recall mode 4 IC. (IC 185)

_____ Verify "B" RHR pump is running with return aligned to "B" loop.

_____ Verify 1-RH-MOV-1700, 1701, 1720A and 1720B all energized.

_____ Enter malfunction RH0702, 0-sec. TD, for sheared shaft on "B" RHR pump.

_____ Verify pressurizer level trend is stable or increasing.

_____ Go to run, acknowledge alarms.

_____ Freeze simulator.

_____ Place simulator in run when directed by the examiner.

NUMBER	PROCEDURE TITLE	REVISION
1-AP-11	LOSS OF RHR (WITH ELEVEN ATTACHMENTS)	19
		PAGE 1 of 20

PURPOSE

To provide instructions for maintaining Core Cooling and protecting the Reactor Core in the event that RHR Cooling is lost.

ENTRY CONDITIONS

This procedure is entered when RHR is required for Core Cooling and any of tho following conditions exist:

- Air-binding of operating RHK pumps **as** indicated by:
  - Flow oscillations. or
  - Motor amps fluctuating. or
  - Excessive pump noise.
- Annunciator "E" Panel A 6. RHR PP 1A AUTO TRIP. is LIT. or
- Annunciaror "E" Panel A-7, RKR PP 1B AUTO TRIP. is LIT, or
- Annunciator "E" Panel A-8. RHR SYSTEM LO FLOW. is LIT. or
- Loss of RHR pumps due to loss of power. or
- Failure of RHR system to control RCS temperature due to loss of CC or valve failures. or
- Loss of Service Water System with RKR System in service. or
- Loss of Component Cooling System with RHR System in service.

RECOMMENDED APPROVAL: RECOMMENDED APPROVAL - ON FILE	DATE	EFFECTIVE DATE
APPROVAL: APPROVAL - ON FILE	DATE	

STEP	ACTION/EXPECTED RESPONSE	RESPONSE NOT OBTAINED

* *

CAUTION:
- RCS make-up concentration MUST be greater than or equal To current Shutdown Margin and Boron concentration requirements of the COLR.
- Changes in RCS pressure due to boiling in the core can result in Reactor Vessel water level changes that may not show on RCS standpipe level indicator 1-RC-LI 103.

* *

1.— CHECK RCS LEVEL - DECREASING — GO TO Step 5.

- RCS standpipe level - DECREASING

  OR

- RCS ultrasonic level indicator - DECREASING

  OR

- PRZR level - DECREASING

  OR

- RCS makeup rate - INCREASING

  OR

- Containment Sump pumping frequency - UNEXPLAINED INCREASE

  OR

- PDTT pumping frequency - UNEXPLAINED INCREASE

2.___ INCREASE RCS MAKEUP FLOW

STEP	ACTION/EXPECTED RESPONSE	RESPONSE NOT OBTAINED
3.	ISOLATE RCS DRAIN PATHS:	
	a) Check the following Letdown Isolation Valves - CLOSED: • 1-CH-HCV-1200A • 1-CH-HCV-1200B • 1-CH-HCV-1200C • 1-CH-LCV-1460A • 1-CH-LCV-1460B	a) Manually close valves.
	b) Check 1-CH-HCV-1142, RHR System to Letdown Isolation Valve - CLOSED	b) Manually close valve.
	c) Check loop drains - CLOSED: • 1-RC-HCV-1557A • 1-RC-HCV-1557B • 1-RC-HCV-1557C	c) Manually close valves.
	d) While continuing with procedure. verify the following valves - LOCKED CLOSED: • 1-RH-36, Residual Heat Removal to RWST Isolation Valve (Containment) • 1-RH-34, Residual. Heat Removal Supply to RP (Containment.)	d) Ensure valves are closed.
	e) Close any known RCS drain paths	
	f) Initiate actions to stop level decreases due to maintenance covered by 0-GOP-13.3, ASSESSMENT OF MAINTENANCE ACTIVITIES FOR POTENTIAL LOSS OF REACTOR COOLANT INVENTORY	

STEP	ACTION/EXPECTED RESPONSE	RESPONSE NOT OBTAINED

* *

CAUTION:
- RHR flow less than the design flow indicated by Attachment 3 may cause RCS temperature to increase.
- Changes in RCS pressure can result in Reactor Vessel water level changes that may not show on RCS level indicator 1-RC-LI-103.

* * . *

STEP	ACTION/EXPECTED RESPONSE	RESPONSE NOT OBTAINED
4.__	VERIFY ADEQUATE RCS MAKEUP FLOW:	
	a) Check RCS level - STABLE OR INCREASING	a) Ensure the keylock switch for 1-RC-LI-105, Independent RCS Level Indicator, is in ENABLE. GO TO appropriate procedure: • 1-AP-17, SHUTDOWN LOCA OR • 1-AP-52, LOSS OF REFUELING CAVITY LEVEL DURING REFUELING
	b) Check RHR flow - LESS THAN OR EQUAL TO DESIGN FLOW OF ATTACHMENT 3 • 2 RHR HXs in use - Page 1 of 2 • 1 RHR HX in use - Page 2 of 2	b) Reduce RHR flow to design flow rate of Attachment 3.
	c) Check RCS level - GREATER THAN MINIMUM FOR INDICATED FLOW OF ATTACHMENT 2	c) Do the following: 1) Continue RCS makeup. 2) Stop RHR Pumps. 3) GO TO Step 11.
	d) Check RCS level - AT LEAST +10 INCHES ABOVE CENTERLINE	d) Increase RCS level to greater than +10 inches above centerline. IF level cannot be increased to greater than +10 inches above centerline, THEN GO TO 1-AP-17, SHUTDOWN LOCA.

STEP	ACTION/EXPECTED RESPONSE	RESPONSE NOT OBTAINED
5.—	VERIFY RHR ISOLATION VALVES - OPEN:	
	a) RHR Inlet Isolation Valves - OPEN • 1 RH-MOV 1700 • 1 RH-MOV 1701	a) Do the following: 1) Stop REIR Pump(s). 2) Reduce RCS pressure as necessary. 3) WHEN RCS pressure is less than 418 psig. THEN open valves.
	b) AT least one RHR Outlet Isolation Valve - OPEN • 1-RH-MOV-1720A • 1-RH-MOV-1720B	b) Open at least one RNR Outlet Isolation Valve.

* *

CAUTION: RHR flow less than minimum requirements may cause RCS temperature to increase.

* *

NOTE:
- Operating at low RRR system flow rates during reduced inventory operations greatly reduces the risk of air entrainment (vortexing).
- Indications of a pump sheared shaft are low flow and low motor amps. A degraded pump or a pump with a sheared shaft is to be considered as NOT running.

6.—	CHECK ONE RHR PUMP - RUNNING:	Do the following: a) IF the other RHR pump is available. THEN stop any degraded RHR pump.

(STEP 6 CONTINUED ON NEXT PAGE)

STEP	ACTION/EXPECTED RESPONSE	RESPONSE NOT OBTAINED
6.	CHECK ONE RHR PUMP - RUNNING (Continued):	
		b) IF a degraded RHR pump is running AND the other RHR pump is NOT available, THEN GO TO Step 7.
		c) IF electrical power is available. THEN do the following: 1) Manually close 1-RH-PCV-1605 and 1-RH-HCV-1758. 2) IF an RHR Pump was previously stopped due to air entrainment. THEN locally vent both RHR Pumps. 3) IF both RHR pumps are stopped. THEN start one RHR pump. 4) Restore RHR flow by repositioning the following RHR Control Valves: ■ 1-RH-HCV-1758 • 1-RH-FCV-1605 5) IF an RHR Pump has been started. THEN GO TO Step 7. IF no RHR Pump can be started. THEN GO TO Step 11.
		d) IF electrical power is NOT available. THEN do the following: 1) Initiate 0-AP-10, LOSS OF ELECTRICAL POWER. 2) GO TO Step 11.

STEP	ACTION/EXPECTED RESPONSE	RESPONSE NOT OBTAINED
7.	VERIFY RHR SYSTEM - NORMAL: • RHR flow - NORMAL • RHR flow - STABLE • RHR Motor amps - STABLE • RCS temperature - STABLE	Do the following: a) IF RHR Pump is vortexing. THEN do the following: 1) Start increasing RCS level to at least +10 inches above centerline by increasing charging flow. 2) Check RHR flow - less than or equal to design flow of Attachment 3. • 2 RHR HXs in use - Page 1 of 2 • 1 RHR HX in use - Page 2 of 2 IF RHR flow is greater than the design flow-rate of Attachment 3, THEN reduce flow to the design flowrate using: • 1-RH-HCV-1758 • 1-RH-FCV-1605 3) Check RCS level- Greater than minimum for indicated flow of Attachment 2. • IF RCS level is not greater than minimum for indicated flow of Attachment 2, THEN STOP the RHR Pumps and go to Step 11. 4) Send an Operator to locally check pump operation: • RHR pump noise • RHR pump seals • RHR pump vibration b) IF the running RHR pump is degsaded AND the other RHR pump is mailable. THEN RETURN TO Step 6. c) IF RHR System cannot be stabilized. THEN stop running RHR Pump AND GO TO Step 11.

STEP	ACTION/EXPECTED RESPONSE	RESPONSE NOT OBTAINED
8.	CHECK SERVICE WATER TO CC HEAT EXCHANGER - AVAILABLE	
	a) Verify Service Water System IN SERVICE	a) IF Service Water flow is NOT available, THEN initiate the following while continuing with this procedure: • 0-AP-12, LOSS OF SERVICE WATER • 1-AP-15, LOSS OF COMPONENT COOLING GO TO Step 11.
	b) Verify Service Water Supply Valves to CC System - OPEN • 1-SW-MOV-108A • 1-SW-MOV-108B	b) Open Service Water Supply Valves to CC System: • 1-SW-MOV-108A • 1-SW-MOV-108B
	c) Locally check Service Water to CC Heat Exchanger ΔP - NORMAL	c) GO TO Step 11.

STEP	ACTION/EXPECTED RESPONSE	RESPONSE NOT OBTAINED
9.	CHECK CC FLOW TO RHR HEAT EXCHANGERS - NORMAL: • 1-CC-FI 132A • 1 CC-FI 132B	Do the following: a) Open CC valves for in service CC Heat Exchanger: • 1-CC-TV-103A, A RHR Heat Exchanger Return Isolation • 1-CC-TV-103B, B RHR Heat Exchanger Return Isolation • 1-CC-MOV-100A, A CC Heat Exchanger Outlet Isolation • 1-CC-MOV-100B, B CC Heat Exchanger Outlet Isolation b) IF either of the following trip valves can NOT be opened. THEN close the RHR CC MOV. 1-CC-MOV-100A OR 1 CC-MOV-100B, associated with the closed trip valve: • 1-CC-TV-103A • 1-CC-TV-103B c) IF CC flow is restored. THEN GO TO Step 10. d) IF CC is NOT restored. THEN initiate 1-AP-15. LOSS OF COMPONENT COOLING, while continuing with this procedure. e) GO TO Step 11.
10.	RETURN TO PROCEDURE AND STEP IN EFFECT	

STEP	ACTION/EXPECTED RESPONSE	RESPONSE NOT OBTAINED

* *

CAUTION: If RCS boiling is determined to exist. then non-essential personnel should be evacuated from the Containment.

* *

11. __ INITIATE PERSONNEL PROTECTIVE ACTIONS:

a) Record most recent time to boiling estimate from 1-GOP-13.0. ALTERNATE CORE COOLING METHOD ASSESSMENT:

- Time (minutes): _____

b) Evaluate need to implement EPIP-1.01, EMERGENCY MANAGER CONTROLLING PROCEDURE

c) Monitor Containment Radiation:

- 1 €3-REIS-159
- 1-RM RMS-160

12. __ INITIATE ATTACHMENT 11, CONTAINMENT CLOSURE. WHILE CONTINUING WITH THIS PROCEDURE

13. — VERIFY 1 RC-LI 105. INDEPENDENT RCS LEVEL INDICATOR · ENERGIZED

Place the keylock switch for I-RC-LI-105 in ENABLE.

14. __ START AVAILABLE CONTAINMENT AIR RECIKC FANS USING 1-OP-21.1. CONTAINMENT VENTILATION

STEP	ACTION/EXPECTED RESPONSE	RESPONSE NOT OBTAINED
	NOTE: If RCPs are stopped. then Attachment 10, NATURAL CIRCULATION should be used to establish and maintain natural circulation.	
15.	MAINTAIN CORE COOLING USING FORCED CIRCULATION:	
	a) Verify at least one RCP RUNNING	a) GO TO Step 16.
	b) Stabilize RCS temperature by dumping steam using either of the following: • Condenser Steam Dumps OR • SG PORVs	
	c) Maintain SG narrow range levels between 23% and 75% using any of the following: • Auxiliary Feedwater OR • Main Feedwater OR • Condensate	
	d) GO TO Step 18	

STEP	ACTION/EXPECTED RESPONSE	RESPONSE NOT OBTAINED
16.___	CKECK IF THE RCS SHOULD BE COOLED WITH SPENT FUEL POOL COOLING:	
	a) Verify Reactor Cavity - FLOODED	a) GO TO Step 17.
	b) Verify Spent Fuel Pit level - NORMAL	b) Initiate 0-AP-27, MALFUNCTION OF SPENT FUEL PIT SYSTEM. AND GO TO Step 17.
	c) Initiate Attachment 9, COOLING THE RCS USING SFP COOLERS	
	d) GO TO Step 18	

* *

CAUTION:
- Personnel working in Containment should be warned before the RCS is refilled to avoid contamination of personnel near any RCS openings.
- Only borated water should be added to the RCS to maintain adequate shutdown margin.
- Differences exist in RCS levels between active and inactive cold and hot legs during reduced inventory operations. At saturated conditions. the hot and cold leg levels can differ by several feet.

* *

NOTE: The alternate cooling method priority is obtained from 1-GOP-13.0. ALTERNATE CORE COOLING METHOD ASSESSMENT.

*17.___ DETERMINE APPROPRIATE ALTERNATE CORE COOLING METHOD:

- Natural Circulation . Initiate ATTACHMENT 10, NATURAL CIRCULATION. while continuing with this procedure

OR

(STEP 17 CONTINUED ON NEXT PAGE)

STEP	ACTION/EXPECTED RESPONSE	RESPONSE NOT OBTAINED
"17.	DETERMINE APPROPRIATE ALTERNATE CORE COOLING METHOD (Continued):	
	• Reflux Boiling - Initiate ATTACHMENT 8, REFLUX BOILING. while continuing with this procedure	
	OR	
	• Hot Leg Injection Forced Feed and Spill - Initiate ATTACHMENT 5. HOT LEG INJECTION FORCED PEED AND SPILL. while continuing with this procedure	
	OR	
	• Cold Leg Injection Forced Feed and Spill - Initiate ATTACHMENT 6. COLD LEG INJECTION FORCED FEED AND SPILL, while continuing with this procedure	
	OR	
	• Gravity Feed and Spill - Initiate ATTACHMENT 4, GRAVITY FEED AND SPILL. while continuing with this procedure	

STEP	ACTION/EXPECTED RESPONSE	RESPONSE NOT OBTAINED

* *

CAUTION: If the Containment has been previously closed out using Attachment 11, CONTAINMENT CLOSURE, then personnel should not re-enter without first contacting Health Physics.

* *

18.__ CONTINUE ATTEMPTS TO RESTORE RHR SYSTEM:

a) Vent RHR System as necessary:

1) Maintain RCS level while venting RHR by increasing makeup flow to RCS

2) Locally vent RHR System

(STEP 18 CONTINUED ON NEXT PAGE)

STEP	ACTION/EXPECTED RESPONSE	RESPONSE NOT OBTAINED
18.	CONTINUE ATTEMPTS TO RESTORE RHR SYSTEM (Continued):	
	b) Establish conditions to start RHR Pumps:	
	1) Verify RHR Pumps . SECURED	1) GO TO Step 19.
	2) Check RCS Level · AT LEAST +10 INCHES ABOVE CENTERLINE	2) Increase RCS level to greater than +10 inches above centerline. IF level cannot be increased to greater than +10 inches above centerline. THEN GO TO 1-AP-17, SHUTDOWN LOCA.
	3) Check RHR Pump · AVAILABLE	3) Try to get an RHR Pump available.
	4) Check RHR Inlet Isolation Valves OPEN: • 1-RH-MOV 1700 • 1-RH-MOV-1701	4) Manually open valves
	5) Check RHR Outlet Isolation Valves. Disch to Cold Legs OPEN: • 1-RH-MOV-1720A ("B" Cold Leg) OR • 1-RH MOV-1720B ("C" Cold Leg)	5) Manually open desired valve.
	6) Check 1-RH HCV-1758 CLOSED	6) Manually close valve.
	7) Check I-RH FCV-1605 · CLOSED	7) Manually close valve.

STEP	ACTION/EXPECTED RESPONSE	RESPONSE NOT OBTAINED
19.__	CONTINUE ATTEMPTS TO RESTORE RHR HEAT SINK AS NECESSARY: a) Restore Service Water using 0-AP-12. LOSS OF SERVICE WATER b) Restore CC System using 1-AP-15, LOSS OF COMPONENT COOLING	
20.__	CHECK SERVICE WATER TO CC BEAT EXCKANGER - AVAILABLE:	
	a) Verify Service Water System - IN SERVICE	a) IF Service Water flow is NOT available. THEN continue attempts to restore Service Water using the following while continuing with this procedure: • 0 AP 12. LOSS OF SERVICE WATER • 1-AP-15. LOSS OF COMPONENT COOLING RETURN TO Step 18.
	b) Verify Service Water Supply Valves to CC System - OPEN • 1-SW-MOV-108A • 1-SW-MOV-108B	b) Open Service Water Supply Valves to CC System: • 1-SW-MOV-108A • 1-SW-MOV-108R
	c) Locally check Service Water tu CC Heat Exchanger ΔP - NORMAL	c) RETURN TO Step 18.

STEP	ACTION/EXPECTED RESPONSE	RESPONSE NOT OBTAINED
21.__	CHECK CC TO RHR HEAT EXCHANGERS AVAILABLE:	
	a) Verify CC System - IN SERVICE	a) IF CC flow is NOT available. THEN continue attempts to restore GC using 1-AP-15, LOSS OF COMPONENT COOLING. while continuing with this procedure. RETURN TO Step 18.
	b) Check CC flow to RHR Heat Exchangers . NORMAL: • I-CC-FI-132A • 1-CC-FI 132B	b) Do the following: 1) Open CC valves for in service CC Heat Exchanger: • 1-CC-TV-103A, A RHR Heat Exchanger Return Isolation • 1-CC-TV-103B, B RNR Heat Exchanger Return Isolation • 1-CC-MOV-100A. A CC Heat Exchanger Outlet Isolation • 1-CC-MOV-100B, B CC Heat Exchanger Outlet Isolation 2) IF CC flow is restored. THEN GO TO Step 22. 3) IF CC is NOT restored. THEN continue attempts to restore CC using 1-AP-15. LOSS OF COMPONENT COOLING. while continuing with this procedure. 4) RETURN TO Step 18.

STEP	ACTION/EXPECTED RESPONSE	RESPONSE NOT OBTAINED

* *

CAUTION:
- During RHR flow restoration. flow must start at a lower rate to Limit the initial sudden cooldown and to minimize level loss caused by collapsing voids.
- If the RHR System was not satisfactorily vented, then entrained air can be swept from the system by raising flow to 3300 gpm. This method could cause water hammer or pump damage.

* *

STEP	ACTION/EXPECTED RESPONSE	RESPONSE NOT OBTAINED
22.___	RESTORE RHR FLOW:	
	a) Close the following valves: • 1 RH-HCV-1758 • 1 RH-FCV-1605	
	b) Start one RHR Pump	b) RETURN TO Step 18
	c) Maintain RCS level within acceptable region of Attachment 2	
	d) Restore RHR flow by repositioning the following RHR Control Valves: • 1-RH-HCV-1758 • 1 RH-FCV-1605	

STEP	ACTION/EXPECTED RESPONSE	RESPONSE NOT OBTAINED
23.	VERIFY RHR SYSTEM - NORMAL: • RHR flow - NORMAL • RHR flow - STABLE • RHR Motor amps - STABLE • RCS temperature - STABLE	Do the following: a) IF RHR Pump is vortexing. THEN do the following: 1) Start increasing RCS level to at least +10 inches above centerline by increasing charging flow. 2) Check RHR flow - less than or equal to design flaw of Attachment 3. • 2 RHR HXs in use Page I of 2 • 1 RHR HX in use Page 2 of 2 IF RHR flow is greater than the design flow rate of Attachment 3. THEN reduce flow to the design flowrate using: • 1-RH-HCV-1758 • 1-RH-FCV-1605 3) Check RCS level- Greater than minimum for indicated flow of Attachment 2. • IF RCS level is not greater than minimum for indicated flow of Attachment 2, THEN STOP the RHR Pumos and RETURN TO Step 18. 4) Send an Operator to locally check pump operation: • RHR pump noise • RHR pump seals • RHR pump vibration b) IF RHR System cannot be stabilized. THEN stop running RHR Pump AND RETURN TO Step 18.
24.	COOL DOWN THE RCS AT LESS THAN OR EQUAL TO 50°F/HR	

STEP	ACTION/EXPECTED RESPONSE	RESPONSE NOT OBTAINED
25.__	CHECK IF RCS MAKEUP SHOULD BE REDUCED:	
	a) RCS Temperature - LESS THAN 200°F	a) Continue cooldown with RHR.
	b) RCS Level - STABLE OR INCREASING	b) GO TO Step 26.
	c) Check Low Head SI Pump Suctions From Containment Sump - CLOSED: • 1-SI-MOV-1860A • 1-SI-MOV-1860B	c) GO TO Step 25e.
	d) Stop any running Low Head SI Pump.	
	e) Control RCS level using makeup and letdown as required	
26.__	CHECK RCS TEMPERATURE . LESS THAN 140°F	Continue cooldown with RHR. RETURN TO Step 24.
27.__	RETURN TO PROCEDURE AND STEP IN EFFECT	

- END -

- Generic Letter 87-12, Loss of Decay Heat Removal
- Generic Letter 88 17, Loss of Decay Heat Removal
- NUREG-1410. Loss of Vital AC Power and the Residual Heat Removal System During Mid Loop Operations at Vogtle Unit 1 On March 20, 1990
- Background information for WOG Abnormal Response Guideline ARG-I. LOSS OF RHR WHILE OPERATING AT MID-LOOP CONDITIONS, Rev 0, March 15. 1990.
- NE Technical Report 825, EVALUATION AND DEVELOPMENT OF SETPOINTS FOR ABNORMAL RESPONSE GUIDELINE ARG-1 LOSS OF RHR WHILE OPERATING AT MIDLOOP CONDITIONS NORTH ANNA POWER STATION UNITS 1 AND 2, February 1991
- NE Technical Report 865. ENSURING ADEQUATE DECAY HEAT REMOVAL WITH RCS LOOP STOP VALVES CLOSED. December 6. 1991
- NE Technical Report 865. Revision 2, BACKGROUND AND GUIDANCE FOR ENSURING ADEQUATE DECAY HEAT REMOVAL FOLLOWING LOSS OF RHR SURRY AND NORTH ANNA POWER STATIONS. April 1995
- NSA-92180. NE TECHNICAL REPORT 865, REVISION 1. SUPPLEMENTAL INFORMATION. October 9. 1992
- NAF ET-95030. Updated Time to Boiling Curves. 2/28/95
- 11715-FM-94A. RIIR
- 11715-FM-88A, Fuel Pit Cooling
- 11715 FM 93A. Reactor Coolant
- 11715-FM-96A and B, Safety Injection
- Tech Spec 3.7.9 (ITS TRM 3.7.8)
- OP 95-1148, Incorporate TR 865 Rev 2 into procedures
- CTS 02-89-1750-003, 007, 036
- CTS 02-95-0001 004, Revise procedures to place ultrasonic level in service
- CTS 02-95-0001 012. Revise procedures for new time to boil curves

- 0-GOP-13.3. ASSESSMENT OF MAINTENANCE ACTIVITIES FOR POTENTIAL LOSS OF REACTOR COOLANT INVENTORY
- 0-MCM-1204-3, EMERGENCY INSTALLATION OF THE EQUIPMENT DOOR AND ESCAPE LOCK
- 0 MCM-1204-5. EMERGENCY INSTALLATION OF EQUIPMENT DOOR AND TEMPORARY PENETRATION PLATE
- 0-AP-10, LOSS OF ELECTRICAL POWER
- 0 AP 12, LOSS OF SERVICE WATER
- 1-AP-15, LOSS OF COMPONENT COOLING
- 1-AP-17, SHUTDOWN LOCA
- 1 AP 52. LOSS OF REFUELING CAVITY LEVEL DURING REFUELING
- 1 OP 5.2. REACTOR COOLANT PUMP STARTUP AND SHUTDOWN
- 1 OF-7.1. RECIRC OF RWST USING LOW HEAD SAFETY INJECTION PUMPS
- 0-OP-16.1. SPENT FUEL PIT COOLING AND PURIFICATION SYSTEM
- 1-OP 21.1. CONTAINMENT VENTILATION
- 1-OP-21.5. OPERATION OF AUXILIARY BUILDING IODINE FILTERS
- 1 GOP-13.0. ALTERNATE CORE COOLING METHOD ASSESSMENT
- EPIP-1.01. EMERGENCY MANAGER CONTROLLING PROCEDURE
- The following EOP references this procedure:

  1 FR C.3, RESPONSE TO SATURATED CORE COOLING
- DCP 01 140, Boron Concentration Increase in RWST. CCT. SFP. SIA's/NAPS/Unit 1 & 2. associated with Tech Spec Change Request 375
- Tech Spec Change 385. Revised Containment Analysis

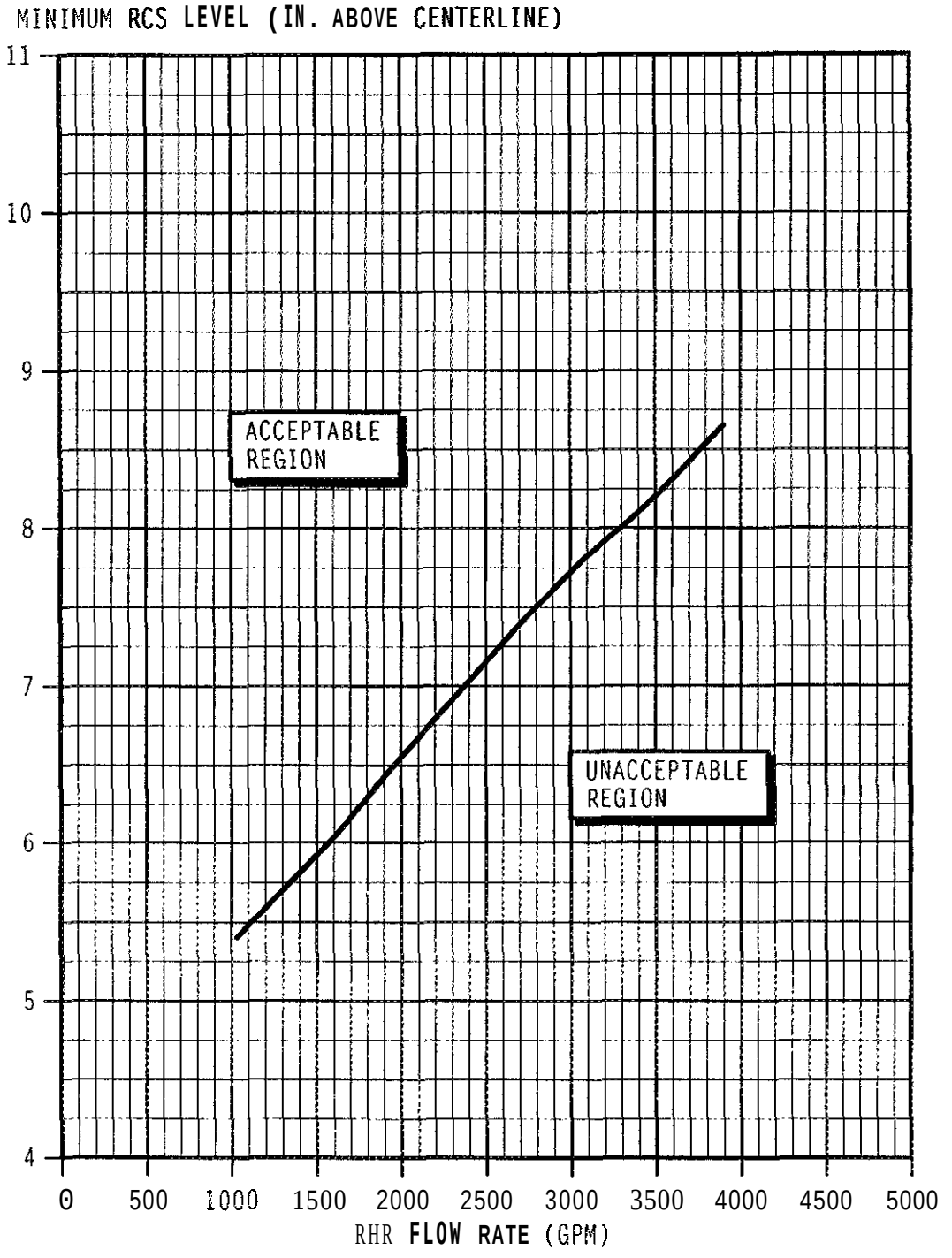
MINIMUM RCS LEVEL (IN. ABOVE CENTERLINE)
11
10
9
8
7
6
5
4
ACCEPTABLE REGION
UNACCEPTABLE REGION
0
500
1000
1500
2000
2500
3000
3500
4000
4500
5000
RHR FLOW RATE (GPM)

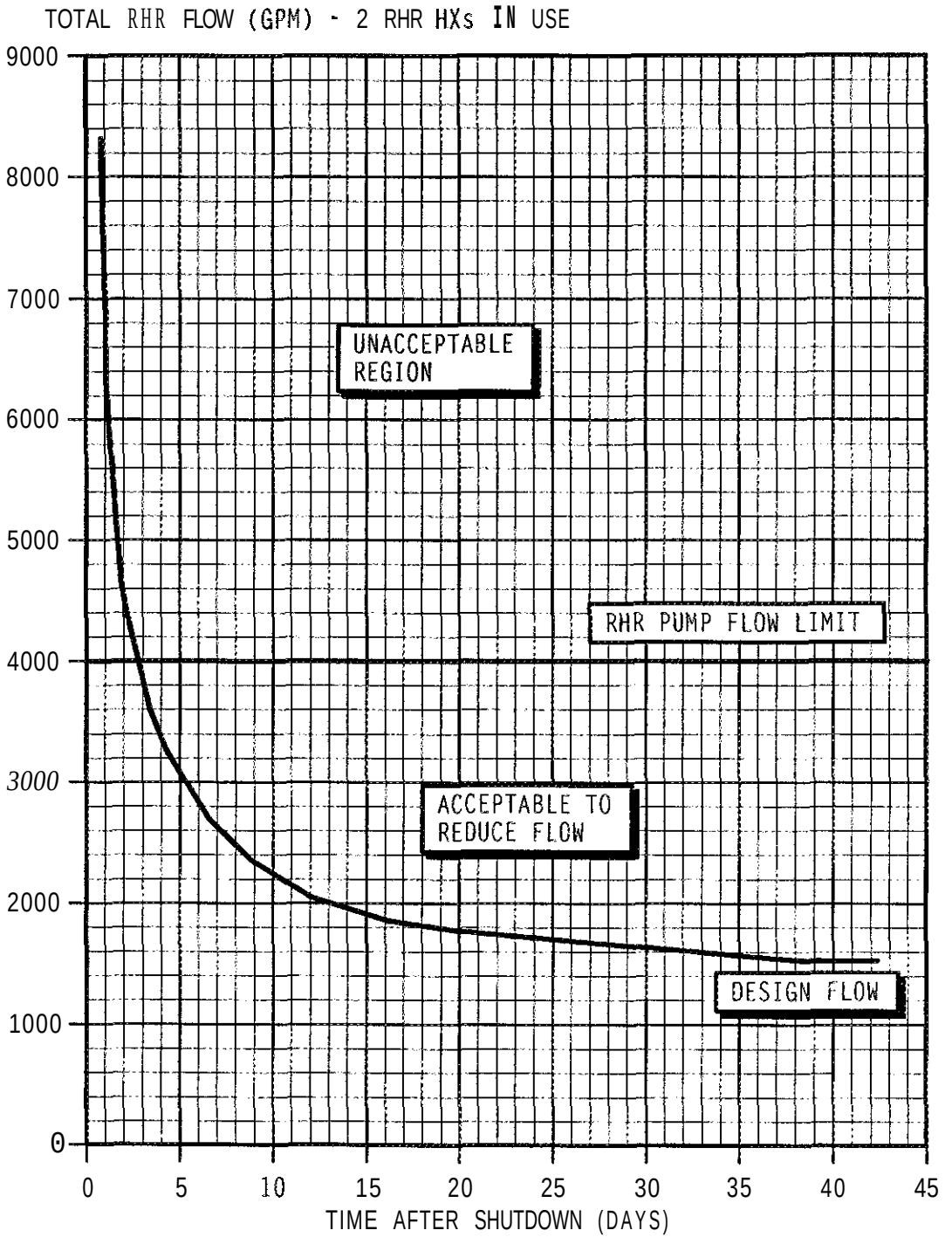
TOTAL RHR FLOW (GPM) - 2 RHR HXs IN USE
9000
8000
7000
6000
5000
4000
3000
2000
1000
0
UNACCEPTABLE REGION
RHR PUMP FLOW LIMIT
ACCEPTABLE TO REDUCE FLOW
DESIGN FLOW
0
5
10
15
20
25
30
35
40
45
TIME AFTER SHUTDOWN (DAYS)

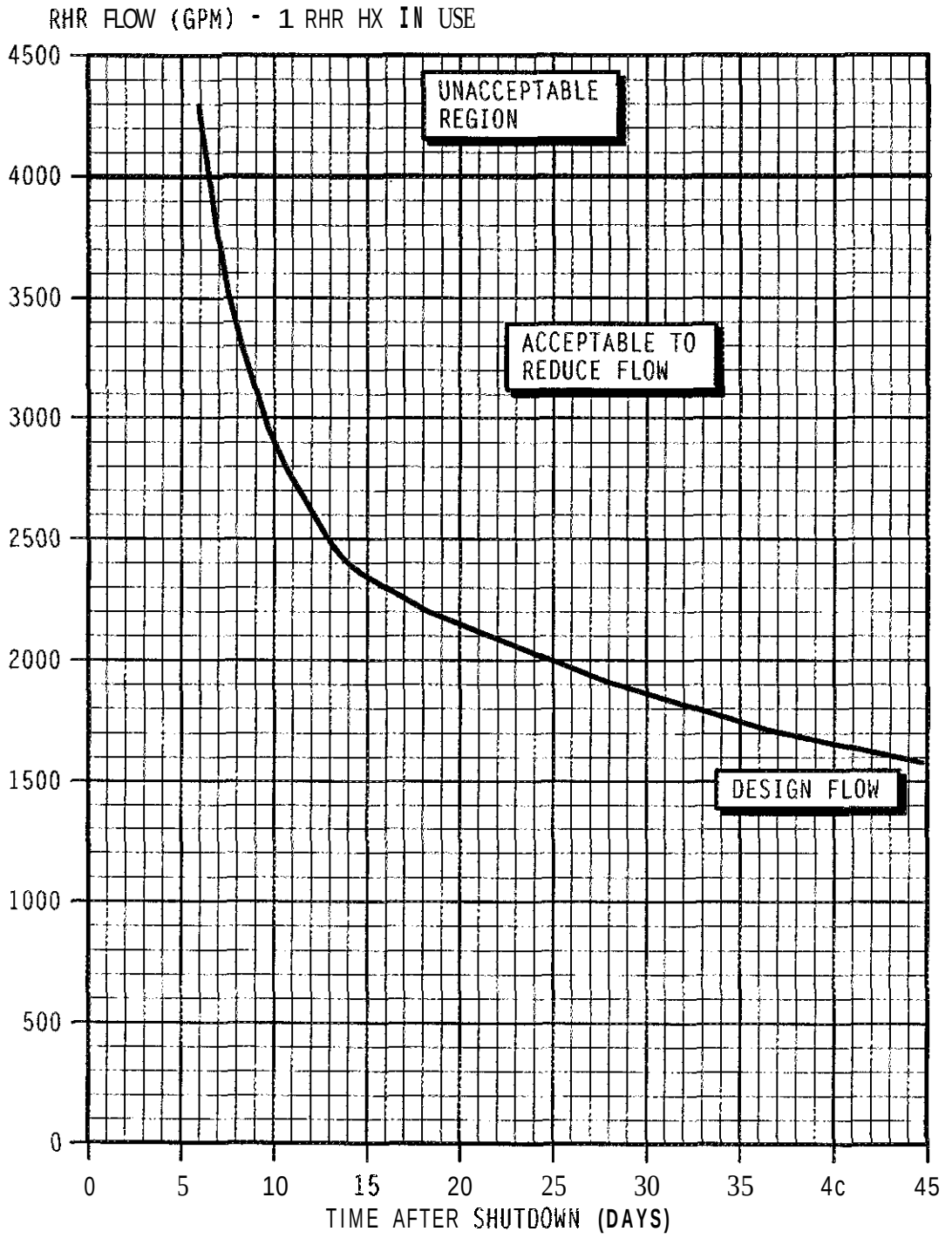
RHR FLOW (GPM) - 1 RHR HX IN USE
4500
4000
3500
3000
2500
2000
1500
1000
500
0
UNACCEPTABLE REGION
ACCEPTABLE TO REDUCE FLOW
DESIGN FLOW
0
5
10
15
20
25
30
35
4c
45
TIME AFTER SHUTDOWN (DAYS)

* *

CAUTION:
- This mode of heat removal and inventory makeup cannot be used when RCS pressures exceed about 20 psig.
- Personnel working in Containment should be warned before the RCS is refilled to avoid inadvertent contamination of personnel near any RCS opening.
- Depending on equipment and RCS conditions. boiling in the core may lead to PRZR surge line flooding and cause RVLIS and RCS Standpipe level indications to read higher than actual.

* *

NOTE:
- If there are no cold leg openings. then cold leg injection is preferable. If there are cold leg openings. then hot leg injection should be used.
- Using this method of core cooling should suppress boiling for at least one hour following initiation of Gravity Feed and Spill.

1 IF desired to conserve Containment Sump inventory for RCS recirculation. THEN place the following Containment Sump Pumps in OFF:

_____ • 1-DA-P-4A

_____ • 1-DA-P-4B

2 Using available plant equipment. align RWST rater to the RCS using one of the following flowpaths:

_____ • 1-SI-P-1A, A Low-Head SI Pump. hot leg injection flow path

_____ • 1-SI-P-1R. B Low-Head SI Pump, hot leg injection flow path

_____ • 1-SI-P-1A, A Low-Head SI Pump, cold leg injection flow path

_____ • 1-SI-P-1B, B Law-Head SI Pump. cold leg injection flow path

_____ • Charging Pump(s) hot leg injection flow path

_____ • Charging Pump(s) cold leg injectfon flow path

_____ • Charging Pump(s) normal charging flow path

_____ • Charging Pump(s) alternate charging flow path

_____ 3 Verify at least one PRZR Safety Valve is removed. **IF NOT. THEN** open both PRZR PORVs and PRZR PORV Block Valves.

NOTE: If forced feed capability is restored. then Attachment 5 **OR** Attachment 6, should be used for core cooling.

_____ 4 Continue attempts to restore forced cooling to RCS.

_____ 5 Return to 1-AP-11. LOSS OF RHR. step in effect.

END-

* *

CAUTION:

- If the RCS is vented to the PRT. then PRT pressure indication should be monitored as an indication of RCS pressure. Changes in RCS pressure can result in Reactor Vessel water level changes that may not show on RCS standpipe level indicator 1-RC-LI-103.
- Depending on equipment and RCS conditions. boiling in the core may lead to PRPR surge line flooding and cause RVLIS and RCS Standpipe level indications to read higher than actual.
- If RYST level decreases to 23%. then the SI System should be aligned for recirculation using Attachment 7. ALIGNING SI SYSTEM FOR RECIRC. to provide long-term cooling.
- If RWST level decreases to less than 3%. then an alternate water source will be necessary in order to prevent loss of LHSI Pump or Charging Pump suction.

* *

NOTE: Hot leg injection using this Attachment is the preferred method of RCS makeup for forced feed and spill operations. If hot leg injection is not available. then Attachment 6, COLD LEG INJECTION FORCED FEED AND SPILL should be used.

1 IF desired to conserve Containment Sump inventory for RCS recirculation. THEN place the following Containment Sump Pumps in OFF:

_____ • 1-DA-P-4A

_____ • 1-DA-P-4B

_____ 2 Verify a Charging Pump is available and is specified for RCS makeup by the Alternate Core Cooling Method Assessment. IF a Charging Pump is NOT available. THEN GO TO Step 5.

_____ 3 Verify a Charging Pump flow path to the RCS hot legs is available IF a Charging Pump flow path is NOT available. THEN GO TO Step 5.

4 Align a Charging Pump to make up to the RCS as follows:

a) Open Charging Pump Suction from RWST Isolation Valves:

_____ • 1-CW-MOV-11155

_____ • 1-CH-MOV-1115D

b) Close Charging Pump Suction from VCT Isolation Valves:

_____ • 1-CH-MOV-1115C

_____ • 1-CH-MOV-1115E

_____ c) **Open** 1-CH-MOV-1373, Charging Pump Recirc Header Isolation Valve.

d) Open the Charging Pump Recirc Valves:

_____ • 1-CH-MOV-1275A for 1-CH-P-1A

_____ • 1-CH-MOV-1275B for 1-CH-P-1B

_____ • 1-CH-MOV-1275C for 1-CH-P-1C

_____ e) Start one Charging Pump.

f) Close the Normal Charging Isolation Valves:

_____ • 1-CH-MOV-1289A

_____ • 1-CH-MOV-1289B

g) Align one **of** the following hot leg injection flow paths as desired:

_____ • 1-SI-MOV-1869B

OR

_____ • 1-SI-MOV-1869A

(STEP 4 CONTINUED ON NEXT PAGE)

h) Close the **Charging** Pump Recirc Valves:

_____ • 1-CH-MOV-1275A for 1-CH-P-1A

_____ • 1-CH-MOV-1275B for 1-CH-P-16

• 1-CH-MOV-1275C for 1-CH-P-1C

i) Check the following to determine **if** charging flow *is* adequate:

_____ • RCS level **is** stable or increasing

_____ • **RCS** temperature **is** stable or decreasing

_____ j) IF charging flow is adequate, THEN GO TO Step 6. IF charging flow is NOT adequate. THEN GO **TO** Step 5 to align a Low-Head SI Pump.

5 Align a Low-Head SI Pump to make up to the RCS as follows:

a) Open the desired Low-Head SI Pump Suction From RWST Suction Valve:

_____ • 1-SI-MOV-1862A

OR

_____ • I-SI-MOV-18625

b) Close both of the ow-Head SI Pump Discharge Isolation Valves to the Cold Legs:

_____ • 1-SI-MOV-189OC

_____ • 1-SI-MOV-1890D

c) Close both of the Low-Head SI Pump Discharge Isolation Valves:

_____ ■ 1-SI-MOV-1864A

_____ • 1-SI-MOV-1864B

d) Start the desired Low-Head SI Pump:

_____ • 1-SI-P-1A

OR

_____ • 1-SI-P-IB

e) Open the desired Low-Head SI Pump Discharge Isolation Hot Ley Injection Valve:

_____ • 1-SI-MOV-1890A

OR

_____ • 1-SI-MOV-1890B

6 Establish RCS bleed path using one of the following methods:

- Verify at least one PRZR Safety Valve is removed

OR

- Use PRZR PORVs:

a) Verify power is available or restore power to PRZR PURV Block Valves.

b) Open both PRZR PDRV Block Valves.

c) Upen bath PRZR PORVs.

7 Maintain RCS makeup and heat removal:

a) Maintain Charging OF Low-Head SI flow.

b) Maintain RCS bleed path.

c) WHEN RWST level decreases to 23%. THEN initiate Attachment 7, ALIGNING SI SYSTEM FOR RECIRC.

* E WHEN RHR OR other means of decay heat removal is established. THEN consult TSC or Plant Staff to determine if SI flow can be stopped. WHEN SI flow can be stopped. THEN continue with Step 9.

9 IF both of the following Low-Head SI Containment Suction Valves are closed. THEN GO TO Step 11. IF either valve is open. THEN GO TO Step 10:

- 1-SI-MOV-1860A
- 1-SI-MOV-1860B

* *

CAUTION: To provide adequate Charging Pump cooling. Charging flow must be maintained at least 60 gpm. During SI Recirculation Mode the Charging Pump recircs must remain closed to prevent lifting the Seal Water return relief valve.

* *

10 IF a bow Head SI Pump is aligned to supply Charging Pump suction in the SI Recirculation Mode, THEN have TSC or plant staff ensure the following is the desired Recovery method. IF NOT the desired Recovery method. THEN GO TO Step 14:

_____ a) Verify 1-CH-HCV-1311. Auxiliary Spray Valve is closed.

b) Open Normal Charging Line Isolation Valves:

_____ • 1-CH-HCV-1310

_____ • 1-CH-MOV-1289A

_____ • 1-CH-MOV-12898

_____ c) Open 1-CH-FCV-1122 in Manual to establish 60 gpm Charging flow.

d) Close the following hot leg injection valves:

_____ • 1-SI-MOV-18695

_____ • 1-SI-MOV-1869A

_____ e) Establish and maintain greater than 60 gpm Charging flow using 1-CH-FCV-1122 in MANUAL.

_____ f) Have TSC or plant staff provide guidance on realigning systems for recovery.

_____ g) GO TO Step 14.

11 ISOLATE HOT LEG INJECTION:

a) 00 the following:

_____ 1) Open 1-CH-MOV-1373. Charging Pump Recirc Header Isolation Valve.

2) Open Charging Pump Recirc Valves:

_____ • 1-CH-MOV-1275A for 1-CH-P-1A

_____ • 1-CH-MOV-1275B for 1-CH-P-1B

_____ • **1-CH-MOV-1275C** for **1-CN-P-1C**

b) Close the following hot leg injection valves:

_____ • 1-SI-MOV-1869B

_____ • 1-SI-MOV-1869A

12 Establish normal Charging and Letdown:

_____ a) Put controller for 1-CH-FCV-1122, Normal Charging **Flow** Control Valve, in MANUAL and close.

_____ b) Verify 1-CH-MCV-1311, Auxiliary Spray Valve. is closed.

c) Open Normal Charging Line Isolation Valves:

_____ • 1-CH-HCV-1310

_____ • 1-CH-MOV-1289A

_____ • 1-CH-MOV-1289B

_____ d) Open 1-CH-FCV-1122, Normal Charging Flow Control Valve. to establish desired flow.

(STEP 12 CONTINUED ON NEXT PAGE)

e) Establish Letdown:

_____ 1) Verify at least one CC Pump is running. IF NOT, THEN start at least one CC Pump using 1-OP-51.1. COMPONENT COOLING SYSTEM OR 1-AP-15. LOSS OF COMPONENT COOLING.

_____ 2) Put 1-CH-PCV-1145 in MANUAL and open to 100%.

3) Open the following:

_____ e 1-CH-TV-1204A

_____ ■ 1-CH-TV-1204B

4) Place desired Letdown path in service:

_____ • Open I-CH-HCV-1142. RHR TO LETDOWN ISOL VALVE, to establish Letdown from RHR.

• 00 the following to establish Letdown from RCS:

a) Open the following:

_____ • 1-CH-LCV-1460A

_____ • 1-CH-LCV-1460B

b) Open at least one of the following Letdown Orifice Valves:

• 1-CH-HCV-1200A

_____ • 1-CH-HCV-1200B

_____ • 1-CH-HCV-1200C

_____ 5) Adjust 1-CH-PCV-1145 in MANUAL or AUTO to establish desired letdown pressure.

(STEP 12 CONTINUED ON NEXT PAGE)

f) Check VCT makeup control system. as follows:

_____ 1) Verify one Boric Acid Transfer Pump is aligned to Unit I blender. IF NOT. THEN align one Boric Acid Transfer Pump using the applicable 0-OP-8 series procedure.

_____ 2) Verify at least one PG Pump is running. IF NOT. THEN start one PG Pump.

3) Set makeup concentration at greater than 2600 ppm, as follows:

_____ a) Set Boric Acid Controller to 8.25 (16.5 gpm)

_____ b) Set PG Controller to 4.25 (65 gpml

_____ 4) Place Blender control in AUTOMATIC.

g) Align Charging Pump suction to VCT. as follows:

_____ 1) Verify VCT level is greater than 22%. IF NOT. THEN, WHEN VCT level is greater than 42%. THEN do Step 12.g.2 below:

2) Do the following:

a) Open Charging Pump Suction From VCT Isolation Valves:

_____ • 1-CH-MOV-1115C

_____ * 1-CH-MOV-1115E

b) Close Charging Pump Suction From RWST Isolation Valves:

_____ • 1-CH-MOV-1115B

_____ • I-CH-MOV-11150

13 SECURING LOW-HEAD SI PUMP:

a) Close Low-Head SI Pump Discharge to Hot beg Injection Valves:

_____ • 1-SI-MOV-1890A

_____ • 1-SI-MOV-18906

_____ b) Stop Low-Head SI Pump.

14 Do the following:

_____ a) Continue alignment of Charging and Low-Head SI Systems as directed by the Station Emergency Manager.

_____ b) RETURN TO 1-AP-11. LOSS 0F RHR. step in effect.

-END-

* *

CAUTION:

- If the RCS is vented to the PRT, then PRT pressure indication should be monitored as an indication of RCS pressure. Changes in RCS pressure can result in Reactor Vessel water level changes that may not show on RCS standpipe level indicator 1-RC-LI-103.
- Depending on equipment and RCS conditions. boiling in the core may lead to PRZR surge line flooding and cause RVLIS and RCS Standpipe levcl indications to read higher than actual.
- If RWST level decreases to 23%. then the SI System should be aligned for recirculation using Attachment 7, ALIGNING SI SYSTEM FOR RECIRC. to provide long-term cooling.
- If RWST level decreases to less than 3%.then an alternate water source will be necessary in order to prevent loss of LHSI Pump or Charging Pump suction.

* *

NOTE: Hot leg injection using Attachment 5, COLD LEG INJECTION FORCED FEED AND SPILL is the preferred method of RCS makeup for forced feed and spill operations. If hot leg injection is not available. then this Attachment should be used.

1 IF desired to conserve Containment Sump ,inventory for RCS recirculation. THEN place the following Containment Sump Pumps in OFF:

_____ • 1-DA-P-4A

_____ • 1-DA-P-4B

_____ 2 Verify a Charging Pump is available and is specified for RCS makeup by the Alternate Core Cooling Method Assessment. IF a Charging Pump is NOT available, THEN GO TO Step 5.

_____ 3 Verify a Charging Pump flow path to the RCS cold legs is available. IF a Charging Pump flow path is NOT available, THEN GO TO Step 5.

4 Align a Charging Pump to make up to the RCS as follows:

a) Open Charging Pump Suction from RWST Isolation Valves:

_____ • 1-CH-MOV-1115B

_____ • 1-CH-MOV-1115D

b) Close Charging Pump Suction from VCT Isolation Valves:

_____ • 1-CH-MOV-1115C

_____ • 1-CH-MOV-1115E

_____ c) Open 1-CH-MOV-1373, Charging Pump Recirc Header Isolation Valve.

d) Open the Charging Pump Recirc Valves:

_____ • 1-CM-MOV-1275A for 1-CH-P-1A

_____ • 1-CN-MOV-12758 for 1-CH-P-18

_____ • 1-CH-MOV-1275C for 1-CH-P-1C

_____ e) Start one Charging Pump.

f) Close the Normal Charging Isolation Valves:

_____ • 1-CH-MOV-1289A

_____ • 1-CH-MOV-1289B

(STEP 4 CONTINUED ON NEXT PAGE)

g) Align one of the following cold leg injection Flow paths as desired:

- BIT injection flow path:
  1) Close BIT Recirc Valves:

_____ • 1-SI-TV-1884A

_____ • 1-SI-TV-1884B

_____ • 1-SI-TV-1884C

  2) Open BIT Outlet Valves:

_____ • 1-SI-MOV-1867C

_____ • 1-SI-MOV-18670

  3) Open BIT Inlet Valves:

_____ • I-SI-MOV-1867A

_____ • 1-SI-MOV-1867B

OR

_____ • Open 1-SI-MOV-1836. BIT Bypass Valve.

h) Close the Charging Pump Recirc Valves:

_____ • 1-CH-MOV-12758 for 1-CH-P-1A

_____ • 1-CH-MOV-1275B for 1-CH-P-1B

_____ • 1-CH-MOV-1275C for 1-CH-P-1C

i) Check the fallowing to determine if charging flow is adequate:

_____ • RCS level is stable or increasing

_____ • RCS temperature is stable or decreasing

_____ j) IF charging flow is adequate, THEN GO TO Step 6. IF charging flow is NOT adequate. THEN GO TO Step 5 to align a Low-Head SI Pump.

5 Align a bow-Head SI Pump to make up to the RCS as follows:

a) Open the desired Low-Head SI Pump Suction From RWST Suction Valve:

_____ • 1-SI-MOV-1862A

OR

_____ • 1-SI-MOV-18628

b) Close both of the Low-flead SI Pump Discharge Isolation Valves to the Hot Legs:

_____ • 1-SI-MOV-1890A

_____ • 1-SI-MOW-18908

c) Open the desired Low-Head SI Pump Discharge Isolation Valve:

_____ • 1-SI-MOV-1864A

OR

_____ • 1-SI-MOV-1864B

d) Start the desired Low-Head SI Pump:

_____ ■ 1-SI-P-1A

OR

_____ ■ 1-SI-P-1B

e) Open the desired Low-Head SI Pump Discharge Isolation Valve to the Cold Legs:

_____ • 1-SI-MOV-189OC

OR

_____ • 1-SI-MOV-1890D

6 Establish RCS bleed path using one of the following methods:

_____ • Verify at least one PRZR Safety Valve is removed

OR

• Use PRZR PORVs:

_____ a) Verify power is available or restore power to PRZR PORV Block Valves.

_____ b) Open both PRZR PORY Block Valves.

_____ c) Open both PRZR PORVs.

7 Maintain RCS makeup and heat removal:

_____ a) Maintain Charging or Low-Head SI flow.

_____ b) Maintain RCS bleed path.

_____ c) WHEN RWST level decreases to 23%. THEN initiate Attachment 7. ALIGNING SI SYSTEM FOR RECIRC.

_____ * 8 WHEN RHR OR other means of decay heat removal is established. THEN consult TSC or Plant Staff to determine if SI flow can be stopped. WHEN SI flow can be stopped, THEN continue with Step 9.

_____ 9 IF both of the following Low-Head SI Containment Suction Valves are closed. THEN GO TO Step 11. IF either valve is open, THEN GO TO Step 10:

- 1-SI-MOV-1860A
- 1-SI-MOV-1860B

* *

CAUTION: To provide adequate Charging Pump cooling. Charging flow must be maintained at least 60 gpm. During SI Recirculation Mode the Charging Pump recircs must-remain closed tu prevent lifting the Seal Water return relief valve.

* *

10 IF a Low Head SI Pump is aligned tu supply Charging Pump suction in the SI Recirculation Mode, THEN have TSC or plaflt staff ensure the following is the desired Recovery method. IF NOT the desired Recovery method. THEN GO TO Step 14:

_____ a) Verify 1-CH-NCV-1311. Auxiliary Spray Valve is closed.

b) Open Normal Charging Line Isolation Valves:

_____ • 1-CH-HCV-1310

_____ • 1-CH-MOV-1289A

_____ • 1-CH-MOV-1289B

_____ c) Open 1-CH-FCV-1122 in Manual to establish 60 gpm Charging flow.

d) Close BIT Inlet Isolation Valves:

_____ • 1-SI-MOV-1867A

_____ • 1-SI-MOV-18678

e) Close BIT Outlet Isolation Valves:

_____ • 1-SI-MOV-1867C

_____ • 1-SI-MOV-18670

_____ f) IF 1-SI-MOV-1836 is open, THEN place control power on AND close.

_____ g) Establish and maintain greater than 60 gpm Charging flow using 1-CH-FCV-1122 in MANUAL.

_____ h) Have TSC or plant staff provide guidance on realigning systems for recovery.

_____ i) GO TO Step 14.

11 ISOLATE BIT:

a) Do the following:

_____ 1) Open 1-CH-MOV-1373. Charging Pump Recirc Header Isolation Valve.

2) Open Charging Pump Recirc Valves:

_____ • 1-CH-MOV-1275A for I-CH-P-1A

_____ • 1-CH-MOV-1275B for 1-CH-P-IB

_____ • 1-CH-MOV-1275C for 1-CH-P-1C

b) Close BIT Inlet Isolation Valves:

_____ • 1-SI-MDV-1867A

_____ • 1-SI-MOV-18678

c) Close BIT Outlet Isolation Valves:

_____ ■ 1-SI-MOV-1867C

_____ • 1-SI-MOV-1867D

_____ d) IF I-SI-MOV-1836 is open. THEN place control power on AND close.

12 Establish normal Charging and Letdown:

_____ a) Put controller for 1-CH-FCV-1122, Normal Charging Flow Control Valve. in MANUAL and close.

_____ b) Verify 1-CH-HCV-1311, Auxiliary Spray Valve. is closed.

c) Open Normal Charging Line Isolation Valves:

_____ ■ 1-CH-NCV-1310

_____ 1-CH-MOV-1289A

_____ • 1-CH-MOV-1289B

_____ d) Open 1-CH-FCV-1122. Normal Charging Flow Control Valve, to establish desired flow.

(STEP 12 CONTINUED ON NEXT PAGE)

e) Establish Letdown:

_____ 1) Verify at least one CC Pumo is running. IF NOT, THEN start at least one CC Pump using' 1-OP-51.1. COMPONENT COOLING SYSTEM OR 1-AP-15, LOSS OF COMPONENT COOLING.

_____ 2) Put 1-CH-PCV-1145 in MANUAL and open to 100%.

3) Open the following:

_____ • 1-CH-TV-1204A

_____ • 1-CH-TV-12048

4) Place desired Letdown path in service:

_____ • Open 1-CH-HCV-1142, RHR TO LETDOWN ISOL VALVE, to establish Letdown from RHR.

• Do the following to establish Letdown from RCS:

a) Qpen the following:

_____ • 1-CH-LCV-1460A

_____ • 1-CH-LCV-1460B

b) Open at least one of the following Letdown Orifice Valves:

_____ • 1-CH-HCV-1200A

_____ • 1-CH-HCV-1200B

_____ • 1-CH-HCV-1200C

_____ 5) Adjust 1-CH-PCV-1145 in MANUAL or AUTO to establish desired letdown pressure.

(STEP 12 CONTINUED ON NEXT PAGE)

f) Check VCT makeup control system. as follows:

_____ 1) Verify one Boric Acid Transfer Pump is aligned to Unit 1 blender. IF NOT, THEN align one Boric Acid Transfer Pump using the applicable 0-OP-8 series procedure.

_____ 2) Verify at least one PG Pump is running. IF NOT, THEN start one PG Pump.

3) Set makeup concentration at greater than 2600 ppm, as follows:

_____ a) Set Boric Acid Controller to 8.25 (16.5 gpm)

b) Set PG Controller to 4.25 (65 gpm)

_____ 41 Place Blender control in AUTOMATIC.

g) Align Charging Pump suction to VCT, as follows:

_____ 1) Verify VCT level is greater than 22%. IF NOT. THEN, WHEN VCT levcl is greater than 42%. THEN do Step 12.g.2 below:

2) Do the following:

a) Open Charging Pump Suction From VCT Isolation Valves:

_____ • 1-CH-MOV-1115C

_____ • I-CH-MOV-1115E

b) Close Charging Pump Suction From RWST Isolation Valves:

_____ • 1-CH-MOV-1115B

_____ • 1-CW-MOV-11150

13 SECURING LOW-HEAD SI PUMP:

a) Close Low-Head SI Pump Discharge to Cold Legs Valves:

_____ • 1-SI-MOV-1864A

_____ • 1-SI-MOV-1864B

_____ b) Stop Low-Head SI Pump.

14 Do the following:

_____ a) Continue alignment of Charging and Low-Head SI Systems as directed by the Station Emergency Manager.

_____ b) RETURN TO 1-AP-11, LOSS OF RHR, step in effect.

-END-

* *

CAUTION: To prevent possible radioactive release from the RWST, VCT level should be maintained greater than 12%.

* *

NOTE: Unit 2 RWST can provide an alternate water source through the RP system. The Casing Cooling Tank may also be available as an alternate water source.

_____ 1 IF Containment Sump level is greater than 2 feet-8 inches, THEN GO TO Step 2. IF sump level is less than 2 feet-8 inches. THEN consult TSC or Plant Staff for guidance to provide an alternate water source.

* *

CAUTION: During SI Recirculation Mode the Charging Pump recircs must remain closed to prevent lifting the Seal Water return relief valve.

* *

NOTE: If an SI signal is present. then the SI System will automatically align for recirculation at an RWST level of 19%.

2 Monitor RWST level. WHEN level decreases to 23%. THEN do the following:

_____ a) Verify a Low-llead SI Pump is running. IF no Low-Head SI Pump is running, THEN start one Low-Head SI Pump on recirc using **1-OF-7.1.** RECIRC **OF** RWSP **USING** LOW HEAD SAFETY INJECTION PUMPS.

_____ b) Reset both trains of SI **if** necessary.

_____ c) Stop all but one Charging Pump and place in PTL.

_____ d) Open 1-CH-MOV-1373. Charging Pump Recirc Header Isolation Valve.

(STEP 2 CONTINUED **OM NEXT PACE)**

e) Open the Charging Pump Recirc Valves:

____ 1-CH-MOV-1275A for 1-Ctl-P-1A

____ • 1-CH-MOV-1275B for 1-CH-P-1B

____ • 1-CH-MOV-1275C for 1-CH-P-1C

f) Close the Normal Charging Isolation Valves:

____ o 1-CH-MOV-12898

____ • 1-CH-MOV-1289B

(STEP 7 CONTINUED ON NEXT PAGE)

g) ensure one of the following Charging Pump flow paths is aligned to the RCS. IF NOT. THEN manually align one desired flowpath:

- BIT injection flow path:

  1) BIT Recirc Valves - CLOSED:

  ____ e 1-SI-TV-1884A

  ____ • 1-SI-TV-18848

  ____ • 1-SI-TV-1884C

  2) At least one BIT Outlet Valve OPEN

  ____ • 1-SI-MOV-1867C

  ____ • 1-SI-MOV-1867D

  3) At least one BIT Inlet Valve - OPEN

  ____ • 1-SI-MOV-1867A

  ____ • I-SI-MOV-1867B

  OR

  ____ I-SI-MOV-1836, BIT Bypass Valve - OPEN

  OR

- One of the following hot leg injection Valves - OPEN:

  ____ • 1-SI-MOV-18698

  OR

  ____ • 1-SI-MOV-1869A

(STEP 2 CONTINUED ON NEXT PAGE)

h) Do the following:

_____ 1) Close 1-CH-MOV-1370, Seal Injection Isolation Valve.

2) IF 1-CH-MOV-1370 cannot be closed, THEN do the following:

_____ a) Close 1-CH-HCV-1186. RCPs Seal Water Flow Control.

b) Energize and close the RCP Seal Water Injection Isolation Valve. as time permits:

_____ 1. Close 1-EE-BKR-1H1-2S K1.

_____ 2. Close 1-CH-MOV-1370.

i) Close the Charging Pump Recirc Valves:

_____ • 1-CH-MOV-1275A for 1-CH-P-1A

_____ • 1-CH-MOV-1275B for 1-CH-P-1B

_____ • 1-CH-MOV-1275C for I-CH-P-1C

j) Open Low-Head SI Discharge To Charging Pumps Valves:

_____ • 1-SI-MOV-1863A

_____ • 1-SI-MOV-18636

k) Close Low-Head SI Recirc Valves:

_____ • 1-SI-MOV-1885A

_____ • 1-SI-MOV-1885B

_____ • 1-SI-MOV-1885C

_____ • 1-SI-MOV-1885D

l) Open Low-Head SI Containment Suction Valve:

_____ • 1-SI-MOV-1860A

_____ • 1-SI-MOV-1860B

(STEP 2 CONTINUED ON NEXT PAGE)

m) Verify closed or close Low-Head SI Suction Valve from RWST:

___ o 1-SI-MOV-1862A

___ • 1-SI-MOV-18625

n) Close Charging Pump Suction From RWST Isolation Valves:

___ • 1-CH-MOV-1115B

___ • 1-CH-MOV-1115D

o) Close Charging Pump Suction From VCT Isolation Valves:

___ • 1-CH-MOV-1115C

___ • 1-CH-MOV-1115E

3 IF Recirc Spray is available and required to provide a heat sink. THEN obtain Station Emergency Manager direction to initiate Recirc Spray and do the following:

___ a) Evaluate Unit 2 Service Water System operability.

___ b) Manually place one Recirc Spray Heat Exchanger in service.

___ c) Manually start the associated Recirc Spray Pump.

___ d) IF a CRA occurs on Unit 2, THEN terminate Service Water to Unit 1 CC Heat Exchangers.

___ 4 Continue alignment of Charging and Low-Head SI Systems as directed by the Station Emergency Manager.

___ 5 RETURN TO 1-AP-11, LOSS OF RHR, step in effect.

-END-

* *

CAUTION: If the RCS is vented to the PRT. then PRT pressure indication should be monitored as an indication of RCS pressure. Changes in RCS pressure can result in Reactor Vessel water level changes that may not show on RCS standpipe level indicator 1-RC-CI-103.

* *

NOTE:
- When RHR is restored, then the TSC or Plant Staff should be consulted to determine if Reflux Boiling should be terminated.
- Stable Reflux Boiling can be maintained when RCS level is kept above the core and below the top of the hot leg piping. Reflux Boiling can be effective regardless of the initial RCS level.
- RCS temperature will increase to saturation during establishment of Reflux Boiling. RCS pressure could increase to a positive pressure of as much as 20-50 psig. These are expected and necessary conditions during Reflux Boiling.

1 Maintain SG narrow range levels between 23% and 75% using any of the following:

_____ • Auxiliary Feedwater

_____ • Main Feedwater

_____ • Condensate

2 Dump steam using either of the following:

_____ • Fully open two Condenser Steam Dump Valves

OR

_____ • Fully open SG PORVs on all available SGs

3 Verify effective Reflux Boiling by monitoring the following:

_____ • Core exit TCs - STABLE

_____ • Core Exit TCs - AT SATURATION TEMPERATURE FOR RCS PRESSURE

_____ • RCS hot leg temperatures - AT SATURATION TEMPERATURE FOR RCS PRESSURE

_____ • RCS pressure - STABLE AND ABOVE ATMOSPHERIC PRESSURE

NOTE: RVLIS may not be an accurate indication *of* actual **RCS** level during Reflux Boiling. but RVLIS may be used to trend RCS level

_____ 4 Attempt to maintain RCS level once RCS temperature and pressure are stabilized.

_____ 5 Monitor Core Exit TCs - STABLE

_____ 6 Maintain stable plant conditions.

_____ 7 GO TO 1-AP-11, LOSS OF RHR. step in effect

-END-

1. As required. fill the Reactor Cavity to normal refueling level (water level at Reactor Cavity Skimmers):

   a) Align one Low-Head SI Pump to fill the Reactor Cavity:

      1) 1 SI-P-1A:

      ___ • Open 1-SI-MOV-1862A, Low-Head SI Pump A Suction.

      ___ • Open 1-SI-MOV-1864A, Low-Head SI Pump A Discharge.

      OR

      2) 1-SI-P-1B:

      ___ • Open 1-SI-MOV-1862B. Low-Head SI Pump B Suction.

      ___ • Open 1-SI-MOV-1864B. Low-Head SI Pump B Discharge.

   b) Open either of the following Low-Head SI to Cold Leg MOVs:

   ___ • 1-MOV-SI-1890C

   OR

   ___ • 1-MOV SI-1890D

   c) Start the Low-Head SI Pump that was aligned:

   ___ • 1-SI-P-1A

   OR

   ___ • 1-SI-P 1B

2. WHEN the Reactor Cavity is full. THEN do the following:

   ___ a) Stop the Low Head SI Pump.

   b) Close Low-Head SI Pump Discharge Valve:

   ___ • 1 SI-MOV-1864A for 1-SI-P-1A

   ___ • 1-SI-MOV-1864B for 1-SI-P-1B

   ___ c) Open the SFP gate valve.

3. Align the RP system to pump from the SFP to the Reactor Cavity:

___ a) Stop running RP Pumps.

b) Align the RP valves in Containment as follows:

___ 1) Close 1-RP 1. Reactor Cavity Drain/R.P. Suction Isolation Valve.

___ 2) Close 1-RP-3. 1A Reactor Cavity Skimmer To RP Pumps Isol Valve.

___ 3) Open 1-RP-28. Refuel Prfcn Filter to Reactor Cavity Isol Valve.

c) Close the following RP valves in the Auxiliary Building basement:

___ • 1 RP-10, 1A RP Skimmer Assembly To RP Pps Suct Hdr Isol Vv

___ • 1-RP-11, Unit 1 RWST To RP Pumps Suction Hdr Isol Valve

___ • 1-RP 52. 1B RP Skimmer Assembly To RP Pps Suct Hdr Isal Vv

___ • 1 RP 53. Unit 2 RWST To RP Pumps Suction Hdr Isol Valve

___ • 1-RP-80. Refuel Prfcn Filters to Spent Fuel Pit Isol Vv

d) Close the following RP valves in Unit 2 Penetration Area:

___ • 1-RP-134, Refuel Purification Fltrs To Unit 2 RWST Isol Valve.

___ • 1 RP 84, Refuel Purification Fltrs To Reac Cavity Isol Vv.

e) Align the following RP valves in Unit 1 Penetration Area:

___ 1) Close 1 RP-24. Refuel Purification Fltrs To Unit 1 RWST Isol Vv

___ 2) Open 1-RP-26. Refuel Purification Fltrs To Reac Cavity Isol Vv.

f) Open the following RP valves in the Auxiliary Building basement:

___ • 1-RP-79, Refuel Purification Fltrs Outlet Hdr Xconn Isol Vv.

___ • 1-RP-78. Refuel Purification Fltrs Outlet Hdr Xconn Isal Vv.

___ • 1-RP 30. Spent Fuel Pit Coolers to RP Pps Suct Hdr Isol Vv.

4. Open the following valves to align the RP Filters:

   ___ • 1 RP-18. 1A Refueling Purification Filter Inlet **Isol** Valve.

   ___ • 1-RP 23. 1A Refueling Purification Filter Outlet Isol Valve.

   ___ • 1-RP-60. 1B Refueling Purification Filter Inlet Isol Valve.

   ___ • 1-RP 65, 1B Refueling Purification Filter Outlet Isol Valve.

   ___ • 1-RP 77. 1B Refueling Purification Filter Outlet Isol Valve.

   ___ • 1-RP-17. 1-RP-FL-1B And 1-RP-I-1 Bypass Isol Valve.

   ___ • 1-RP 39, Refuel Purification Pumps Disch Hdr Xconn Isol Vv.

   ___ • 1-RP-40. Refuel Purification Pumps Disch Hdr Xconn Isol Vv.

   ___ • 1-RP-41, 1B Refuel Purification Filter Bypass Valve.

   ___ • 1 RP-42. Refuel Purification Pumps Disch Hdr Xconn Isol Vv.

5. Close the following valves to isolate the RP Ion Exchanger:

   • 1-RP-68. Refueling Purification Ion Exch Inlet Isol Valve.

   ___ • 1-RP-74, Refuel Prfcn Ion Exch to 1A RP Filter Isol Valve.

6. Open the valves for the desired RP Pump(s):

a) 1-RP-P-1A:

___ • 1-RP-12. 1A Refueling Purification Pump Suction Isol Valve.

___ • 1-RP-16, 1A Refueling Purification Pump Disch Isol Valve.

b) 1-RP-P-1B:

___ • 1-RP 32. Refuel Purification Pps Suct Bdr Xconn Isol Valve.

___ • 1-RP-34. 1B Refueling Purificatian Pump Suction Isol Valve.

___ • 1 RP-38. 1B Refueling Purification Pump Disch Isol Valve.

c) 1-RP-P-1C:

___ • 1-RP 32. Refuel Purification Pps Suct Hdr Xcann Isol Valve.

___ • 1-RP 33. Refuel Purification Pps Suct Hdr Xconn Isol Valve.

___ • 1-RP-55. 1C Refuel Purification Pump Suction Isol Valve.

___ • 1-RP-119, 1C Refuel Purification Pump Disch Isol Valve.

7. ___ Place the SFP Cooling System in service using 0-OP-16.1, SPENT FUEL PIT COOLING AND PURIFICATION SYSTEM.

8. ___ Start the RP Pump(s) that were aligned.

9. ___ Throttle the following valves as necessary to maintain RP filter differential pressures less than or equal to 45 psid:

- 1-RP-23. 1A Refueling Purification Filter Outlet Isol Valve.
- 1-RP 65. 1B Refueling Purification Filter Outlet Isol Valve.

10. — RETURN TO 1-AP-11, LOSS OF RHR, step in effect.

* *

CAUTION: If the RCS is vented ta the PRT, then PRT pressure indication should be monitored as an indication of RCS pressure. Changes in RCS pressure can result in Reactor Vessel water level changes that may not show on RCS standpipe level indicator 1-RC-LI-103.

* *

NOTE:
- o Ta increase RCS subcooling, it is desirable to have the PRZR PORVs closed.
- When RHR is restored, then SG feed and bleed may be secured.

1 Stablize RCS temperature by dumping steam. using either of the following:

_____ • Candenser Steam Dumps

OR

_____ • SG PORVs

2 Maintain SG narrow range levels between 23% and 75% using any of the fallowing:

_____ • Auxi1iary Feedrater

_____ • Main Feedwater

_____ • Condensate

3 Verify Natura? Circulation by monitoring the following:

_____ • RCS subcooling based on Core Exit TCs - GREATER THAN 35°F

_____ • SG pressures - STABLE OR DECREASING

_____ • RCS temperatures - STABLE OR DECREASING

_____ • RCS cold leg temperatures - AT SATURATION TEMPERATURE FOR SG PRESSURE

_____ • RCS pressure - GREATER THAN 50 PSIG

_____ 4 IF Natural Circulation was NOT verified, THEN increase dumping steam.

5 IF RCPs are available, THEN do the following:

_____ a) Start one RCP using 1-OP-5.2. REACTOR COOLANT PUMP STARTUP AMD SHUTDOWN.

_____ b) GO TO 1-AP-11, LOSS OF RHR. Step 15.

_____ 6 Maintain stable plant conditions.

_____ 7 GO TO 1-AP-11. LOSS OF RHR. step in effect.

-END-

1 Evacuate all personnel from Containment not required for closure:

_____ a) Notify Health Physics that Containment evacuation is required.

_____ b) Sound the Containment Evacuation alarm for about 15 seconds and make the following announcement:

"ATTENTION UNIT ONE CONTAINMENT. CONTAINMENT CLOSURC IS RCQUIRED. ALL PERSONNEL NUT REQUIRED TO CLOSE CONTAINMENT EXIT CONTAINMENT IMMEDIATELY."

_____ c) Sound the Containment Evacuation alarm for about 15 seconds and make the following announcement:

"ATTENTION UNIT ONE CONTAINMENT, CONTAINMENT CLOSURE IS REWIRED. ALL PERSONNEL NUT REQUIRED TO CLOSE CONTAINMENT EXIT CONTAINMENT IMMEDIATELY."

_____ 2 Verify or place Unit I Containment Purge Exhaust through the Iodine filters using 0-CP-21.5, OPKRATION OF AUXILIARY BUILDING IODINE FILTERS.

3 IF RCS level is greater than 42 inches above centerline, THEN do the following:

_____ a) Verify the Temporary Penetration Plate is installed. IF NCT. THEN install the Equipment Door and Temporary Penetration Plate using 0-MCM-1204-05. EMERGENCY INSTALLATION OF EQUIPMENT DOOR AND TEMPORARY PENETRATION PLATE.

_____ b) Close at least one door on the Personnel Hatch.

_____ c) GO TO Step 5

NOTE: The trolley hoist must remain attached to the hatch without any change in load distribution on the hoist.

4 IF **RCS** level is 42 inches or less above centerline. THEN do the following:

_____ a) Verify the Equipment Hatch **is** installed. IF NOT. THEN install the Equipment Hatch with at least 10 bolts torqued to 280 ft-lb using 0-MCM-1204-03, EMERGENCY INSTALLATION OF THE EQUIPMENT DOOR **AND** ESCAPE LOCK.

b) Close at least one door on each hatch:

_____ • Personnel Hatch

_____ • Equipment Hatch

_____ 5 IF any other penetration is open for maintenance OR Testing. THEN initiate the required contingency actions.

_____ 6 Place Containment ventilation and Containment cooling in service using 1-OP-21.1, CONTAINMENT VENTILATION.

_____ 7 Verify Containment evacuation is complete.

-END-

Dominion
North Anna Power Station
JOB PERFORMANCE MEASURE EVALUATION

OPERATOR PROGRAM

INITIAL CONDITIONS

Unit 2 Pressurizer Relief Tank low level alarm has annunciated.
PRT level is 67%

INITIATING CUE

You are requested to raise pressurizer relief tank level to 70% to clear the alarm in accordance with 2-OP-5.7, "Operation Of The Pressurizer Relief Tank."

Dominion
North Anna Power Station
JOB PERFORMANCE MEASURE EVALUATION

OPERATOR PROGRAM

R642

TASK

Fill the pressurizer relief tank in accordance with 2-OPd.7, " Operation Of The Pressurizer Relief Tank

TASK STANDARDS

Task was performed as directed by the procedure referenced in the task statement within parentheses

K/A REFERENCE:

K/A 007A1.01

ALTERNATE PATH:

N/A

TASK COMPLETION TIMES

Validation Time = 10 mins. Start Time = _____

Actual Time = _____ minutes Stop Time = _____

PERFORMANCE EVALUATION

Rating [ ] SATISFACTORY [ ] UNSATISFACTORY

Candidate (Print) _____

Evaluator (Print) _____

Evaluator's Signature / Date _____

EVALUATOR'S COMMENTS

_____

_____

_____

Dominion
North Anna Power Station

JOB PERFORMANCE MEASURE
(Evaluation)

OPERATOR PROGRAM

R642

READ THE APPLICABLE INSTRUCTIONS TO THE CANDIDATE

Instructions for Simulator JPMs

I will explain the initial conditions, and state the task to be performed. All control room steps shall be performed for this JPM, including any required communications. I will provide initiating cues and reports on other actions when directed by you. Ensure you indicate to me when you understand your assigned task. To indicate that you have completed your assigned task return the handout sheet I provided you.

instructions for In-Plant JPMs

I will explain the initial conditions, and state the task to be performed. All steps, including any required communications, shall be simulated for this JPM. Under no circumstances are you to operate any plant equipment. I will provide initiating cues and reports on other actions when directed by you. Ensure you indicate to me when you understand your assigned task. To indicate that you have completed your assigned task return the handout sheet I provided you.

INITIAL CONDITIONS

Unit 2 Pressurizer Relief Tank low level alarm has annunciated.
PRT level is 67%

INITIATING CUE

You are requested to raise pressurizer relief tank level to 70% to clear the alarm in accordance with 2-OP-5.7, "Operation Of The Pressurizer Relief Tank."

-".- **EVALUATION METHOD**

Demonstration if conducted in the simulator or in a laboratory (use DEMONSTRATION cues)

Verbal-visual if conducted in the station or on a dead simulator (use VERBAL-VISUAL cues)

TOOLS AND EQUIPMENT

None

PERFORMANCE STEPS

STARTTIME _____

1	Review initial conditions, precautions, and limitations.	Procedure Step 5.2.1/2

SAT [ ] UNSAT [ ]

Standards	Initial conditions are verified and precautions and limitations are reviewed.

Notes/Comments

2	Open reactor containment primary grade water supply isolation valve 2-RC-TV-2519A.	Procedure Step 5.2.3

Critical Step	SAT [ ] UNSAT [ ]

Standards	2-RC-TV-2519A is open.

Dead Simulator Cues	Red light is on and green light is off for 2-RC-TV-2519A.

Notes/Comments

3	Close pressurizer relief tank drain isolation valve 2-RC-HCV-2523.	Procedure Step 5.2.4

SAT [ ] UNSAT [ ]

Standards	2-RC-HCV-2523 is closed.

Dead Simulator Cues	Green light is on and red light is off for 2-RC-HCV-2523.

Notes/Comments

4	Open pressurizer relief tank makeup water supply isolation valve 2-RC-TV-2519B.	Procedure Step 5.2.5

Critical Step	SAT [ ] UNSAT [ ]

Standards	2-RC-TV-2519B is open.

Dead Simulator Cues	Red light is on and green light is off for 2-RC-HCV-2519B.

Notes/Comments

5	Stop filling the pressurizer relief tank.	Procedure Step 5.2.6/7

Critical Step	SAT [ ] UNSAT [ ]

Standards	Desired level (70%) is reached in the Pressurizer Relief Tank, and either or both of the • 2-RC-TV-2519B is closed.

Dead Simulator Cues	2-RC-TV-2519A green light on and red light off. 2-RC-TV-2519B green light on and red light off.

Notes/Comments

>>>>> END OF EVALUATION <<<<<

STOP TIME _____

SIMULATOR, **LABORATORY, IN–PLANT SETUP**
(Required)

JOB PERFORMANCE MEASURE

Fill **the PRT to 70% using 2-OP-5.7.**

CHECKLIST

____ **Recall** IC **196.**

_____ **Ensure** PRT bo **bevel Alarm is illuminated.**

Instructions: If **needed recall IC 2 and drain the PRT until the low level alarm comes in.**

VIRGINIA POWER	PROCEDURE NO: 2-OP-5.7	
NORTH ANNA POWER STATION	UNIT NO: 2	REVISION NO: 11
PROCEDURE TYPE: OPERATING	EFFECTIVE DATE: ON FILE	EXPIRATION DATE: N/A

PROCEDURE TITLE

OPERATION OF THE PRESSURIZER RELIEF TANK (PRT)

REVISION SUMMARY:

- Revised to incorporate OP 02-0378 to prevent RCS dilution in the DEGAS mode. Added new Step 5.1.3 to verify the Unit is not in the DEGAS mode. Added Step 5.1.3 Caution and Precaution and Limitation Step 4.4 to address that the Unit must not be in DEGAS mode during PRT draining to the PDTT because PDTT discharge will be aligned to the Gas Stripper in the DEGAS mode and will cause an RCS dilution.

Writer: Julius Coppa	**Reviewer:** Ben Spencer

ELECTRONIC DISTRIBUTION — APPROVAL ON FILE

PROBLEMS ENCOUNTERED: ☐ Yes ☐ No **NOTE:** If yes, note problems in Remarks.

REMARKS:

(use back for additional space)

SHIFT SUPERVISOR DATE

1.0 PURPOSE

This procedure provides instructions for performing the following actions with the Pressurizer Relief Tank (PRT):

- Draining the PRT.
- Filling the PRT.
- Venting the PRT to the Gas Strippers.
- Adding Nitrogen to the PRT.
- Venting PRT to Process Vents via Sample Sink.
- Using "C" Safety Injection Accumulator to supply Nitrogen to the PRT during RCS draiidown using a procedurally controlled Temporary Modification.

The following synopsis is designed as an aid to understanding the procedure, and is not intended to alter or take the place of the actual purpose, instructions or text of the procedure itself. This procedure provides instructions for performing operations on the PRT. If purging the PRT to the Process Vents via the Vent Pot is desired, the operator should refer to 2-OP-5.1, Filling and Venting the Reactor Coolant System.

In previous Unit 1 outages, an additional controlled source of nitrogen to blanket the PRT has been required due to flow restrictions existing in the installed N_2 supply line. A jumper was installed from the "C" Safety Injection Accumulator vent to a drain for the RHR relief valve discharge line. A section of this procedure will now provide instructions for installation, use, and removal of this jumper.

2.0 REFERENCES

2.1 Source Documents

2.1.1 UFSAR Chapter 5, Reactor Coolant System

2.2 Technical Specifications

None

2.3 Technical References

2.3.1 11715-FM-89D, Unit 1 Sample System

2.3.2 11715-FM-97B, Gaseous Waste Disposal System

2.3.3 12050-FM-89B, Unit 2 Sample System

2.3.4 12050-FM-93B, Reactor Coolant System

2.3.5 12050-FM-94A, Residual Heat Removal System

2.3.6 12050-FM-95C, Chemical and Volume Control System

2.3.7 DCP 95-114, Nitrogen System Pressure Change

2.3.8 2-OP-5.4, Draining the Reactor Coolant System

2.3.9 Temporary Modification N1-1680, Point to point jumper from 1-SI-119 to 1-RH-58

2.3.10 Plant Issue N-2000-0667, When gassing PRT with N2, the Pressure Increases Very Slow

2.3.11 Safety Evaluation 00-SE-PRQC-19, SI Accumulator to PRT N2 Jumper

2.3.12 Safety Evaluation 01-SE-PROC-05, Operation of the Pressurizer Relief Tank (PRT)

2.4 Commitment Documents

None

3.0 INITIAL CONDITIONS

Review the equipment status to verify station configuration supports the performance of this procedure.

4.0 PRECAUTIONS AND LIMITATIONS

4.1 Comply with the following guidelines when marking steps N/A:

- IF the conditional requirements of a step do not require the action to be performed, THEN mark the step N/A.
- IF any other step is marked N/A, THEN have the Shift Supervisor (or designee) approve and justify the N/A on the Procedure Cover Sheet.

4.2 PRT pressure should be maintained between 8 and 12 psig during normal operations.

4.3 PRT pressure should be maintained at least 3 psig while draining.

4.4 Unit 2 MUST NOT be in DEGAS mode during PKT draining to the PDTT. The PDTT discharge will be aligned to 1-BR-EV-2B, Gas Shipper in the DEGAS mode and will cause an RCS dilution.

Init **Verif**

5.0 INSTRUCTIONS

5.1 Draining the PRT

______ 5.1.1 Verify Initial Condition is satisfied,

______ 5.1.2 Review Precautions and Limitations.

* *

CAUTION: Unit 2 MUST NOT be in DEGAS mode during PRT draining to the PDTT. The PDTT discharge will be aligned to 1-BR-EV-2B, Gas Stripper in the DEGAS mode and will cause an RCS dilution.

* *

______ 5.1.3 Verify Unit 2 is NOT in the DEGAS mode.

______ 5.1.4 Verify a positive pressure is present in the PRT. IF NOT, THEN establish a positive pressure using Subsection 5.4 before continuing.

______ 5.1.5 Open 2-RC-HCV-2523, PZR RELIEF TK DRAIN VV, to drain the PRT.

______ 5.1.6 Monitor PDTT level on LI-DG-201, PRIM DR TK LVL.

______ 5.1.7 WHEN the desired level is obtained, THEN close 2-RC-HCV-2523, PZR RELIEF TK DRAIN VV.

Completed: ________________________ Date: __________

5.2 Filling the PRT

5.2.1 Verify Initial Condition is satisfied.

_____ 5.2.2 Review Precautions and Limitations.

_____ 5.2.3 Open 2-RC-TV-2519A, CNTMT PG WATER SUPPLY ISOL.

NOTE: Filling the PRT will greatly increase PG header flow. The standby PG Pump should be available for AUTO-START.

_____ 5.2.4 Close 2-RC-MCV-2523, PRZ RELIEF TK DRAIN VV.

_____ 5.2.5 Open 2-RC-HCV-2519B, PRZ RELIEF TANK PG MAKE-UP ISOL, to fill the PRT.

_____ 5.2.6 WHEN the desired level is reached, THEN close 2-RC-HCV-2519B, PRZ RELIEF TANK PG MAKE-UP ISOL.

_____ 5.2.7 IF desired, THEN close 2-RC-TV-2519A, CNTMT PG WATER SUPPLY ISOL.

Completed: _____ Date: _____

5.3 Venting the PRT

_____ 5.3. I Verify Initial Condition is satisfied.

_____ 5.3.2 Review Precautions and Limitations.

5.3.3 Open the following valves:

_____ • 2-VG-TV-200A, CNTMT GAS VENT HDR OUTSIDE ISOL

_____ • 2-VG-TV-200B, CNTMT GAS VENT KDR INSIDE ISOL

_____ 5.3.4 Notify Backboards operator to monitor Gas Stripper pressure.

_____ 5.3.5 Open 2-RC-HCV-2549, PRZ RELIEF TANK VENT ISOL,, to vent the PRT.

_____ 5.3.6 WHEN the desired PRT pressure is obtained, THEN close 2-RC-HCV-2549, PRZ RELIEF TANK VENT HSOL.

5.3.7 IF desired, THEN close the following valves:

_____ • 2-VG-TV-200A, CNTMT GAS VENT HDR OUTSIDE ISOL

_____ • 2-VG-TV-200B, CNTMT GAS VENT HDR INSIDE ISOL

Completed: _____ Date: _____

5.4 Adding Nitrogen **to** the **PRT**

_____ 5.4.1 Verify **Initial** Condition is satisfied.

_____ 5.4.2 Review Precautions **and** Limitations.

_____ 5.4.3 Verify nitrogen is aligned to the supply header.

_____ 5.4.4 **Reduce demand on** 2-SI-HIC-200, CNTMT NITROGEN SUPPLY HEADER, to 0 percent.

NOTE: To open 2-SI-TV-200, the pushbuttons on both the H Safeguards Panel (2-SI-TV-200A) AND the J Safeguards Panel (2-SI-TV-200B) must be used.

_____ 5.4.5 open 2-SI-TV-200, NITROGEN SUPPLY TO CNTMT.

_____ 5.4.6 Open 2-RC-HCV-2550, PRZ RELIEF TANK NITROGEN ISOL.

_____ 5.4.7 Open 2-SI-HCV-2898, NITROGEN TO PRT ISOLATION VALVE.

5.4.8 WHEN the desired pressure is obtained in the PRT, THEN do the following:

_____ a. Close 2-SI-HCV-2898, NITROGEN TO PRT ISOLATION VALVE.

_____ b. Close 2-RC-HCV-2550, PRZ RELIEF TANK NITROGEN ISOL.

NOTE: To close 2-SI-TV-200, the pushbutton on either the H Safeguards Panel (2-SI-TV-200A) or the J Safeguards Panel (2-SI-TV-200B) may be used. If desired, both pushbuttons may be used.

c. IF the N_2 System is NOT supplying the PORV N_2 Accumulators, THEN do the following:

_____ 1. Close 2-SI-TV-200, NITROGEN SUPPLY TO CNTMT.

_____ 2. Raise output of 2-SI-HIC-200, CNTMT NITROGEN SUPPLY HEADER, to 100 percent.

_____ d. IF the N_2 System is supplying the PORV N_2 Accumulators, THEN lower output of 2-SI-HIC-200, CNTMT NITROGEN SUPPLY HEADER, to 0 percent.

Completed: _____ Date: _____

5.5 Venting PRT to Process Vents via Sample Sink

_____ **5.5.1** Verify Initial Condition is satisfied.

_____ **5.5.2** Review Precautions and Limitations.

_____ **5.5.3** Initiate a Miscellaneous Gas Release Form for the PRT and forward to Health Physics.

_____ **5.5.4** Ensure no Waste Gas Decay Tank release is in progress.

5.5.5 WHEN the Miscellaneous Gaseous Release Form is approved, THEN verify the following valves are open:

_____
- 1-GW-289, PRT Purge Hdr To Wst Gas Regen Hx Shell Side Isol (near Process Vent Refilter)
- **1-SS-161,** Waste Gas Charcoal Filters Inlet Isol Valve (Primary Sample Room behind sink at far corner)

5.5.6 Verify the following valves are closed:

_____
- **1-SS-160,** PRT Bas Space Sample Charcoal Filters Isol Vv (Primary Sample Room above sink)

_____
- **1-SS-159,** Waste Gas Charcoal Filters Hose Conn Isol Vv (Primary Sample Room inside sink)

_____
- 2-SS-96, Primary Sample Sink To H2 Contam Gas Purge Hdr (primary Sample Room inside sink at far left)

_____
- **2-SS-1017,** PRT Gas Space Sample Line Drain Connection Isol Vv (Primary Sample Room above sink)

* *

CAUTION: IF Process Vent flow is lost anytime while venting the PRT, THEN the vent flowpath must be secured to prevent buildup of hydrogen inside the Process Vent system.

* *

5.5.7 Open the following trip valves:

______ • **2-SS-TV-204A,** PRT Bas Space Inside Isol

______ • **2-SS-TV-204B,** PRT Gas Space Outside Isol

______ 5.5.8 Statt venting the PRT by throttling open 2-SS-95, PRT Gas Space Samp Line To H2 Contam Gas Purge (Primary Sample Room above sink).

______ 5.5.9 Monitor PRT pressure while venting.

______ 5.5.10 Monitor Process Vent Radiation Monitors while continuing to throttle open 2-SS-95 until fully open.

______ 5.5.11 Maintain PRT pressure between 8 psig and 12 psig by adding nitrogen using Subsection 5.4, Adding Nitrogen to the PRT.

5.5.12 WHEN venting is complete, THEN close the following valves:

______ • ***2-SS-95,*** PRT Gas Space Samp Line To H2 Contam Gas Purge

______ • **2-SS-TV-204A,** PRT Gas Space Inside Isol

______ • **2-SS-TV-204B,** PRT Gas Space Outside Isol

______ 5.5.13 Have Chemistry sample the PRT.

5.5.14 IF sample results **are** NOT satisfactory, THEN repeat Steps 5.5.7 through 5.5.13 as required.

5.5.15 WHEN venting is complete, THEN have an independent verifier check the following valves closed:

_____ • 2-SS-95, PRT Gas Space Samp Line To H2 Contam Gas Purge

_____ • 2-SS-TV-204A, PRT Gas Space Inside Isol

_____ • 2-SS-TV-204B, PRT Gas Space Outside Isol

Completed: _____ Date: _____

5.6 Instructions for Installation, Use, and Removal of a Jumper to Allow the "C" Safety Injection Accumulator to Supply Nitrogen to the PRT

_____ 5.6.1 Verify Initial Condition is satisfied

_____ 5.6.2 Review Precautions and **Limitations.**

5.6.3 IF Jumper is **being** installed **for** RCS Draindown, THEN verify the following:

_____ • **Unit** 2 is shutdown in Mode 5.

_____ • At least one Pressurizer PORV and associated block valve **are** open.

_____ • Performance of 2-OP-5.4, Draining the Reactor Coolant System, is anticipated or in progress.

_____ 5.6.4 Obtain Shift Supervisor concurrence for jumper installation.

5.6.5 Verify that pressure in 2-SI-TK-IC **is** ≤ 50 **psig** as indicated on the following gauges:

_____ • 2-SI-PI-2929, C **SI** Accumulator Pressure Ch I

• 2-SI-PI-2931, C SI Accumulator Pressure Ch II

_____ **5.** 6 Verify that 2-SI-179, 1C SI Accum Relief Valve Inle Heade Vent Valv **is** closed.

_____ 5.6.7 Have the Maintenance Department remove the blank flange downstream of 2-SI-179 **and** install **a flange** with **a 3/4** inch nipple and a hose fitting.

_____ **5.6.8** Verify that 2-RH-54, Residual HT Removal **Pumps** to PRZR Relief Tk Dr Vv, is closed.

_____ 5.6.9 Remove the pipe cap downstream of **2-RH-54** and install **a** hose fitting.

_____ **5.6.10** Connect a red rubber hose from 2-SI-179 to 2-RH-54 with a check valve installed as to prevent flow from the PRT to the Accumulator. This check valve must be installed at 2-RH-54.

_____ **5.6.11** Open 2-SI-179 to pressurize the jumper.

_____ **5.6.12** Leak test the jumper and fix any leaks.

_____ SS **5.6.13** Notify the Shift Supervisor that the jumper is installed from 2-SI-179 to 2-RH-54.

5.6.14 IF the temporary modification will be installed for more than one shift, THEN have the SRO do the following:

_____ SRO
- Enter the jumper in the Temporary Modification Log.

_____ SRO
- Place completed Attachment 3 of VPAP-1403, Temporary Modifications, in the Temporary Modification Log.

_____ SRO **5.6.15** Enter the temporary modification in the Action Statement Log to remove jumper prior to Mode 4 entry.

_____ **5.6.16** Initiate a 1-LOG-14 to check pressure in 2-SI-TK-IC is ≤ 50 psig as indicated on 2-SI-PI-2929, C SI Accumulator Pressure Ch I, or 2-SI-PI-2931, C SI Accumulator Pressure Ch II, at least once every 6 hours.

NOTE: A request to initiate nitrogen supply to the PRT using the jumper should be in conjunction with performance of 2-OP-5.4, Draining the Reactor Coolant System.

_____ **5.6.17** WHEN requested by the Unit 2 OATC to initiate nitrogen supply to the PRT using the jumper, THEN open 2-RH-54, Residual HT Removal Pumps to PRZR Relief Tk Dr Vv.

_____ 5.6.18 WHEN requested by the Unit 2 QATC to terminate nitrogen supply to the PRT using the jumper, THEN close 2-RH-54, Residual HT Removal Pumps to PRZR Relief Tk Dr Vv.

_____ 5.6.19 REPEAT Steps 5.6.17 and 5.6.18 as directed by the Unit 2 OATC.

5.6.20 WHEN the jumper is no longer required, THEN do the following to remove the jumper:

_____ a. Ensure that 2-RH-54, Residua! HT Removal Pumps to PRZR Relief Tk Dr Vv, is closed.

_____ b. Ensure that 2-SI-179, 1C SI Accum Relief Valve Inlet Header Vent Valve, is closed.

_____ c. Remove the Rose from between 2-SI-179 and 2-RH-54.

_____ d. Install the pipe cap on 2-RH-54.

_____ e. Have the Maintenance Department remove the flange with a 3/4 inch nipple and a hose fitting downstream of 2-SI-179 and re-install the blank flange.

f. Have a second person independently verify that the blank flange downstream of 2-SI-149 has been installed.

_____ SS g. Notify Shift Supervisor that the Temporary Modification has been removed.

_____ SRO h. Remove the temporary modification from the Action Statement Log.

i. IF the temporary nidification was installed for more than one shift, THEN have the SRO do the following:

_____ SRO
- Clear the temporary modification entry in the Temporary Modification Log.

_____ SRO
- Remove the associated Attachment 3 of VPAP-1403, Temporary Modifications, from the Temporary Modification Log.

_____ j. Terminate the 1-LOG-I4 to check pressure in 2-SI-TK-IC.

Completed. _____ Date: _____

Dominion
North Anna Power Station
JOB **PERFORMANCE** MEASURE **EVALUATION**

OPERATOR PROGRAM

INITIAL CONDITIONS

The monthly surveillance of the 1H-EDG is being performed.

1-PT-82H is completed through step 6.2.12.
The operator at the EDG has notified you the EDG is at the high speed stop.
The 1H EDG EMERG DIESEL GENERATOR MODE SELECTOR SWITCH is in MAN REMOTE.
EDG frequency meter is installed and an operator and electrician are standing by to report frequency and remove meter when requested.

INITIATING CUE

You have been directed to sync the iH EDG to the H Emergency Bus and increase EDG load to 2500-2600 KW using 1-PT-82H.

Dominion
North Anna Power Station
JOB PERFORMANCE MEASURE EVALUATION

OPERATOR PROGRAM

TASK

Sync the 1H EDG to the H Emergency Bus using 1-PT-82H and load the EDG to 2500 –2600 KW.

TASK STANDARDS

1H EDG is loaded 2500-2600KW and the EDG is shutdown when load cannot be kept below 2600 KW.

K/A REFERENCE:

K/A 064A4.07

ALTERNATE PATH:

Yes

TASK COMPLETION TIMES

Validation Time =30 mins.
Actual Time = _____ minutes

Start Time = _____
Stop Time = _____

PERFORMANCE EVALUATION

Rating [ ] SATISFACTORY [ ] UNSATISFACTORY

Candidate (Print) _____

Evaluator (Print) _____

Evaluator's Signature / Date _____

EVALUATOR'S COMMENTS

_____

_____

_____

Dominion
North Anna Power Station

JOBPERFORMANCEMEASURE
(Evaluation)

OPERATOR PROGRAM

READ THE APPLICABLE INSTRUCTIONSTO THE CANDIDATE

Instructions for Simulator JPMs

I will explain the initial conditions, and state the task to be performed. All control room steps shall be performed for this JPM, including any required communications. I will provide initiating cues and reports on other actions when directed by you. Ensure you indicate to me when you understand your assigned task. To indicate that you have completed your assigned task return the handout sheet I provided you.

Instructions for In-Plant JPMs

I will explain the initial conditions, and state the task *to* be performed. All steps, including any required communications. shall be simulated for this JPM. Under no circumstances are you to operate any plant equipment. I will provide initiating cues and reports on other actions when directed by you. Ensure you indicate *to* me when you understand your assigned task. To indicate that you have completed your assigned task return the handout sheet I provided you.

PREREQUISITES

None

INITIAL CONDITIONS

The monthiy surveillance of the 1H-EDG is being performed

1-PT-82H is completed through step 6.2.12.
The operator at the EDG has notified you the EDG is at the high speed stop.
Th 1H EMER DIESEL GENERATOR MODE SELECTOR SWITCH is in MAN REMOTE.

EDG frequency meter is installed and an operator and electrician are standing by to report frequency and remove meter when requested.

EVALUATION METHOD

Demonstration if conducted in the simulator or in a laboratory (use DEMONSTRATION cues)

Verbal-visual if conducted in the station or on a dead simulator (use VERBAL-VISUAL cues)

TOOLS AND EQUIPMENT

Sync key

PERFORMANCE STEPS

START TIME _____

1	Turn the sync switch for 15H2 clockwise to the ON position.	Procedure Step 6.2.13
	Critical Step	SAT [ ] UNSAT [ ]
	Standards	Sync switch inserted and turned in the clockwise direction.
	Dead Simulator Cues	If asked tell the operator the sync scope needle is moving slowly counter clockwise..
	Notes/Comments	

2	Record frequency on the procedure and verify between 59.5 and 60.5 Hz.	Procedure Step 6.2.14/15

SAT [ ] UNSAT [ ]

Standards	Frequency is written in procedure step and verified between 59.5 and 60.5 Hz.

Demonstration Cues	Tell the operator frequency is 60.1.

Dead Simulator Cues	Tell the operator frequency is 60.1 Hz.

Notes/Comments

3	Record voltage in the procedure and verify it is 107 to 130 volts.	Procedure Step 6.2.16/17

SAT [ ] UNSAT [ ]

Standards	Voltage is written in the procedure and verified to be between 107 and 130 volts.

NOTE TO THE EVALUATOR	A voltage between 107 volts and 130 volts corresponds to an actual EDG voltage between 3740 volts and 4580 volts.

Dead Simulator Cues	Tell the operator voltage is 120 volts.

Notes/Comments

4	EMER GEN 1H SPEED/LOAD CONTROL switch used to adjust frequency.	Procedure Step 6.2.18

SAT [ ] UNSAT [ ]

Standards	SPEED/LOAD CONTROL switch moved while frequency change verified.

Dead Simulator Cues	When operator turns the switch clockwise tell him diesel speed went up. If switch moved counter-clockwise tell the operator diesel speed went down.

Notes/Comments

5	O erator ; electricians to remove frequency meter.	Procedure Step 6.2.19

SAT [ ] UNSAT [ ]

Standards	Communication to electricians made. It is permissible to delegate that communication to a supervisor or someone else on the crew.
Demonstration Cues	Tell the operator electricians notified and they will remove frequency meter.

Notes/Comments

6	The operator uses SPEED/LOAD switch to match EDG and Bus frequency.	Procedure Step 6.3.1

SAT [ ] UNSAT [ ]

Standards	Bus frequency and EDG frequency are matched. This is verified by syncroscope not moving.
Dead Simulator Cues	Starting Point: Syncroscope is moving slowly in the fast direction. After adjustment downward is made tell the operator the Syncroscope needle has stopped.

Notes/Comments

7	Adjust EDG voltage 1-2 volts higher than bus voltage using EMER GEN 1H EXCITER VOLTAGE CONTROL Switch	Procedure Step 6.3.2

SAT [ ] UNSAT [ ]

Standards	EDG voltage adjusted. 1-2 volts higher than bus voltage.

Dead Simulator Cues	The operator will need a starting point. Tell them EDG voltage is 120 and bus voltage is 126. After adjustment upward tell them it is now 127 volts.

Notes/Comments

8	Adjust speed control so synchroscope goes slowly in the fast direction.	Procedure Step 6.3.3

Critical Step	SAT [ ] UNSAT [ ]

Standards	Snychroscope moves slowly in the clockwise direction.

Dead Simulator Cues	The operator will need a starting point. Tell them synchroscope is moving slowly in the counter clockwise direction. After adjustment upward tell the operator the syncroscope is moving slowly in the fast direction.

Notes/Comments

9	Close EDG output breaker 15H2 by taking the breaker switch in the clockwise position when the synchroscope is approximately 12 o'Clock. Record time breaker closed in procedure.	Procedure Step 6.3.4

Critical Step	SAT [ ] UNSAT [ ]

Standards	15H2 breaker is closed. Time breaker closed written in the procedure.

Dead Simulator Cues	Tell operator red light on and green light off for the EDG output breaker.

Notes/Comments

10	Load EDG to 500-1000 KW using EMER GEN 1H SPEED/LOAD CONTROL Switch and adjust KVAR to zero using VOLTAGE CONTROL Switch	Procedure Step 6.3.5

Critical Step	SAT [ ] UNSAT [ ]

Standards	EDG load 500KW-1000KW. KVAR at zero.

Dead Simulator Cues	After load adjusted up, tell the operator load is 700KW and KVARS are 350 out. After voltage adjustment down tell the operator KVARS are zero.

Notes/Comments

11	Turn the sync switch for 1H2 counter-clockwise to off.	Procedure Step 6.3.6

[SAT[] UNSAT [ ]

Standards	Sync switch placed in off.

Notes/Comments

12	Load EDG to 1650-1750 KW using EMER GEN IH SPEEDLOAD CONTROL Switch.	Procedure Step 6.3.7

Critical Step	SAT [ ] UNSAT [ ]

Standards	EDG load 1650KW-1750KW.

Dead Simulator Cues	Tell the operator load is 1700 KW.

Notes/Comments

13	Adjust KVARS to zero using VOLTAGE CONTROL SWITCH.	Procedure Step 6.3.8

Critical Step	SAT [ ] UNSAT [ ]

Standards	KVAR at zero.

Demonstration Cues	It is acceptable to tell the operator that the 5-minute hold at this power level required by the procedure is complete and they may continue.

Dead Simulator Cues	Tell the operator KVARS are 50 out. After adjustment downward on voltage tell them KVARS are zero. It is acceptable to tell the operator that the 5-minute hold at this power level required by the procedure is complete and they may continue.

Notes/Comments

14	Load EDG to 2050-2150 KW using EMER GEN 1H SPEED/LOAD CONTROL SWITCH.	Procedure Step 6.3.9

Critical Step	SAT [ ] UNSAT [ ]

Standards	EDG load 2050KW-2150 KW.

Dead Simulator Cues	Tell the operator load is 2100 KW.

Notes/Comments

15	Adjust KVARS to zero using V	CONTROL.SWITCH.	Procedure Sep 6.3.10

Critical Step	SAT [ ] UNSAT [ ]

standards	**KVAR at zero.**

Demonstration Cues	It is acceptable to tell the operator that the 5-minute hold at this power level required by the procedure is complete and they may continue.

Dead Simulator Cues	Tell the operator KVARS are 50 out. After adjustment downward on voltage tell them KVARS are zero. It is acceptable to tell the operator that the 5-minute hold at this power level required by the procedure is complete and they may continue.

Notes/Comments

16	Load EDG to 2500-2600 KW using EMER GEN 1H SPEED/LOAD CONTROL SWITCH	Procedure Step 6.3.11

Critical Step	SAT [ ] UNSAT [ ]

Note to Evaluator:	When EDG load gets to 2500 KW a malfunction causes the EDG to continue increasing load. The operator will not be able to adjust load down and needs to open the output breaker.

Standards	EDG loaded to 2500 KW. As load continues to increase the operator opens the EDG output breaker or shuts down the EDG.

Dead Simulator Cues	Tell the operator load is increasing 2600, 2650,2700, 2750, and continue cueing that load is going up until the EDG is shutdown.

Notes/Comments

>>>>> END OF EVALUATION <<<<<

STOP TIME _____

SIMULATOR, LABORATORY, IN--PLANT SETUP
(If Required)

SIMULATOR SETUP

JOB PERFORMANCE MEASURE

TASK

Sync 1H EDG to the bus and load to 2500-2600 KW. Speed control fails high.

CHECKLIST

_____ Recall IC 193

_____ Verify 1H EDG Mode Selector Switch in MAN-REMOTE.

_____ Verify 1H EDG running unloaded

_____ Enter Switch Override- EG1H_SC_RAISE (Emer Gen 1H Speed Control)/ON, Delay time = 5, Trigger =1

_____ Set up event trigger 1 as edgh_mw>=2.5

_____ Take to freeze until exam

If needed setup is shot from IC 2

Insert Remote Function/ EG1H_INST_START(1H EDG Local Start Signal)/ INST VARIABLE/TRUE. Then fellow setup instructions above.

Booth Operator Communications and Instructions:

- When paged for removal of frequency meter, tell the operator electrical will remove the meter.
- When Operator adjusts KVARS after reaching rated load verify trigger 1 has been inserted to fail speed control high.

Dominion	PROCEDURE NO: 1-PT-82H
NORTH ANNA POWER STATION	REVISION NO: 31
PROCEDURE TYPE: OPERATIONS PERIODIC TEST	UNIT NO: 1

PROCEDURE TITLE:

1H EMERGENCY DIESEL GENERATOR SLOW START TEST

TEST FREQUENCY:	UNIT CONDITIONS REQUIRING TEST:
31 Days	At All Times

SPECIAL CONDITIONS: 1-PT-82J, 2-PT-82H, and 2-PT-82J can not be performed during the performance of this procedure.

SURV REQ		EQ				PMT

REVISION SUMMARY

- FrameMaker Template Rev. **030.**
- Incorporated lessons learned from previous EDG Monthly PTs as follows: added new Step **6.4.13** if EDG Room door not blocked open to record time EDG **is** available in Narrative Log; relocated old Step 6.4.13 and associated substeps to Step 1 of Attachment 5; changed Step 6.4.14.a to initiate Attachment **5**; and added new Step **6.4.14.b** to record *in* Narrative Log that EDG Room door closed and EDG is available.
- Corrected speed control switch name in Steps 6.3.1 and 6.3.3.
- Corrected level indicator mark numbers for the underground fuel **oil** storage tanks in Step 6.5.
- Changed "speed diesel" to "diesel speed" in Step **2.7** of Attachment 2.

REASON FOR TEST (CHECK APPROPRIATE BOX):

☐ Surveillance ☐ Post-Maintenance Work Order Number (Post-Maintenance Only): _____

TEST PERFORMED BY (SIGNATURE):	DATE STARTED:	DATE COMPLETED:

TEST RESULT (CHECK APPROPRIATE BOX): ☐ Satisfactory ☐ Unsatisfactory ☐ Partial	WORK REQUEST NUMBERS AND DATE:

THE FOLLOWING PROBLEM(S) WERE ENCOUNTERED AND CORRECTIVE ACTIONS TAKEN:

_____

_____

_____

_____

_____ (Use back for additional remarks.)

COGNIZANT SUPERVISOR or DESIGNEE:	DATE:
ADDITIONAL REVIEWS. Diesel Engineer:	DATE

TABLE OF CONTENTS

Section		Page
1.0	PURPOSE	3
2.0	REFERENCES	3
3.0	INITIAL CONDITIONS	8
4.0	PRECAUTIONS AND LIMITATIONS	9
5.0	SPECIAL TOOLS AND EQUIPMENT	11
6.0	INSTRUCTIONS	12
6.2	Starting the EDG	13
6.3	Loading the EDG	15
6.4	Unloading the EDG	17
7.0	FOLLOW-ON	20
ATTACHMENTS		
1	EDG Pre-Operational Check (EDG Room Operator)	23
2	EDG Preparation And Start (EDG Room Operator)	27
3	Rolling 1H EDG With Air	32
4	EDG Operation (EDG Room Operator)	36
5	EDG Post-Operational Check (EDG Room Operator)	38
6	1H Diesel Relay Identification And Position	44
7	EDG Post-Operational Check (Control Room)	46
8	Synchroscope Closing Angle Indication	48
9	Frequency Meter Installation / Removal	49

1.0 PURPOSE

1.1 To provide instructions for verifying the operability of the 1H Emergency Diesel Generator (EDG), the associated Fuel Transfer Pumps, and the Air Start Flow Path per Tech Spec SR 3.8.1.2, SR 3.8.1.3, SR 3.8.1.4, SR 3.8.1.6, SR 3.8.3.1, SR 3.8.2.1, and Basis **3.8.1.**

1.2 To provide instructions for verifying Fuel Oil Pump Discharge Check Valves 1-EG-254 and 1-EG-278 partially open per Tech Spec 5.5.7.

The following synopsis is designed as an aid to understanding this procedure and **is** not intended to alter **or** take the place of the actual purpose, instructions, **or** text of the procedure itself.

This procedure is designed to slow-start 1H EDG, load 1H EDG for at least one hour, unload 1H EDG, and secure 1H EDG. Verify the level of fuel in the fuel oil day tank and both fuel oil storage ***tanks.*** Verify that at least one fuel oil transfer pump can transfer oil from the fuel oil storage tanks to the fuel oil day tank. Verify that 1-EG-254 and 1-EG-278 opened and allowed partial flow. Verify Start-Air tank **pressure** is lower after 1H EDG start.

When paralleling the EDG with a Bus, the EDG voltage is to he adjusted to 1 to 2 volts higher than the Bus voltage. This slightly higher voltage setting is needed to compensate for the mismatch in the potential transformers. **(Reference 2.3.12)**

2.0 REFERENCES

2.1 Source Documents

2.1.1 UFSAR Section 8.1.2

2.1.2 UFSAR Seetion 8.3.1.1.1

2.1.3 UFSAR Section 8.3.1.1.2.1

2.1.4 UFSAR Section 9.5.4

2.1.5 UFSAR Section 9.5.5

2.1.6 UFSAR Section 9.5.6

2.1.7 UFSAR Section 9.5.7

2.1.8 UFSAR Section 9.5.8

2.1.9 UFSAR Section Table 1.3-7

2.1.10 UFSAR Section Table 9.5-2

2.1.11 NRC Reg Guide 1.108

2.2 **Technical Specifications**

2.2.1 Tech Spec 3.8.1

2.2.2 SR 3.8.1.2

2.2.3 **SR3.8.1.3**

2.2.4 SR 3.8.1.4

2.2.5 SR 3.8.1.6

2.2.6 Tech Spec Bases 3.8.1

2.2.7 Tech Spec 3.8.2

2.2.8 SR 3.8.2.1

2.2.9 Tech Spec Bases 3.8.2

2.2.10 SR 3.8.3.1

2.2.11 Tech Spec 5.5.7

2.2.12 TRM TR 7.1.2

2.2.13 TRM TR 7.2

2.2.14 TRM TR 12.2

2.3 Technical References

2.3.1 Maintenance and Surveillance Testing Program for Model 38TD8-1/8 Standby Units, dated OS-2846

2.3.2 1-ST-61, Starting Procedure, dated 02-12-85, Fairbanks Morse Comments by E.D. Green, dated 08-28-86

2.3.3 1-LOG-12, Emergency Diesel Generator Log (Operating)

2.3.4 0-PT-82.7, Emergency Diesel Generator Failure Record

2.3.5 0-OP-49.6, Service Water System Throttling Alignment

2.3.6 1-SC-5.13, Underground Fuel Oil Storage Tanks I-EG-TK-2A and I-EG-TK-2B

2.3.7 Inservice Inspection Manual, Section XI Programs

2.3.8 0-PT-80, AC Sources Operability Verification

2.3.9 DCP 94-212, Modification of EDG Room Doors

2.3.10 Memo to R. A. Bergquist from D. L. Biers, North Anna EDG Synchronization (Rev 13 - P2)

2.3.11 Engineering Transmittal ET No. SE 98-074, Evaluation of EDG Operability Based on Previous Monthly Surv Testing

2.3.12 Memo from D. Driver to J. Hayes on Manual Synchronizing

2.3.13 Colt Industries Diesel Tech Manual

2.3.14 11715-ESK-8AC, Emergency Diesel Gen Protection

2.3.15 11715-ESK-11C, Emer Diesel Gen 1H

2.3.16 11715-FM-107A, Emergency Diesel Air Service System

2.3.17 11715-LSK-22-12 Series

2.3.18 ET **N-03-0159,** Reduction Of Oil Leakage And Elimination Of Exhaust Fires

2.3.19 **0-GOP-5.5, EDG Hot** Weather Operations

2.3.20 Memo from A. Dowell to L. Lane, Recommended Actions for EDG Lube Oil Strainer Outlet Temperatures Below **110°F** NAPS/Unit **1** and **2,** dated **4-10-2000** (See **1-OP-6.6A,** Rev. 17)

2.4 Commitment **Documents**

2.4.1 NRC Generic Letter No. **89-04,** Guidance on Developing Acceptable Inservice Testing Program

2.4.2 DR **N-90-2670**

2.4.3 CTS Assignment **02-91-2149,** Commitment **31,** Prelube until a needle deflection is seen or for **2** minutes

2.4.4 CTS Assignment **82-91-1808,** Commitment **003,** Added (old) Tech Spec 3.7.4.2 and changed the applicability to (old) Tech Spec 3.7.4.1

2.4.5 CTS Assignment **02-92-1804,** Commitment 003, Tech Spec Amendment 156/138

2.4.6 CTS Assignment **02-88-2235,** Stuck Louvers

2.4.7 SQER 80-1, **Loss** of Redundant Emergency Diesel Generator Starting Air System

2.4.8 SOER **83-01,** Vibration Analysis

2.4.9 CTS **02-95-2289-002,** Unintentionally Starting of Unit **2** EDG

2.4.10 CTS **02-95-4009-001,** TRM Revision 11, Section **12.2:** EQ Doors

2.4.11 CTS **02-94-2229-079,** EDG steady-state frequency criteria of 60 Hz ± **0.5** Hz

2.4.12 CTS Assignment **02-96-2219,** Commitment **001,** Revise EDG Related Procedures to Improve VAR Control

2.4.13 Tech Spec Change **No. 324,** EDG Fuel Oil

2.4.14 OP **97-0727,** Add Step to Perform Second **PT-80**

2.4.15 CTS Assignment **02-98-2280,** Commitment **003,** Revise procedures for TRM Change Request **26**

2.4.16 Plant Issue N-2000-1061-E1, Category 1 Root Cause Evaluation: 1H Emergency Diesel Generator Failure To Start Due To Hydraulic Lock

2.4.17 ET N **01-110,** Rev. 0, Emergency Diesel Generator Pre-lubrication Practices **North** Anna Power Station - Units 1 and **2**

2.4.18 Plant Issue **N-2003-0959,** EDG Operability In Modes **5,** 6, and During Movement Of Recently Irradiated Fuel Assemblies

2.4.19 CTS Assignment **02-91-0513,** Commitment **019,** IR **91-14** Resident Monthly from 6/16/91-7/20/91

2.4.20 CTS Assignment **02-95-2278-002,** Standby Lube Oil Circulating Pump Repair/Replace Timer

2.4.21 DR **N-99-0838.** Failure of 2H EDG to **Start** for Maintenance Run

2.4.22 Plant Issue **N-2001-1029,** Diesel Exhaust Manifold Fire

2.4.23 DR **N-97-1879,** Addressing Simultaneous Verification **Of** Diesel Engine stop Buttons

2.4.24 Plant **Issue N-2003-4398,** OE 17358: During **A** Diesel Generator Monthly Operability Surveillance, The Field **Amps** Exceeded Nameplate Data

Init Verif

3.0 INITIAL CONDITIONS

3.1 The Unit can be in any Mode.

3.2 Verify Unit 1 is stable with no anticipated large load changes.

3.3 Verify at least one of the following conditions is met:

- The 1J EDG is Operable.

- This procedure is being performed to verify the 1H EDG is Operable OR the 1H EDQ is inoperable and this PT is being performed to return the 1H EDG to Operable condition.

3.4 Verify the Keep-Warm System has a lube oil temperature of greater than 90°F and a water temperature of greater than 105°F.

3.5 Verify an Operator is dedicated to the EDG Control Panel in the Control Room for the duration of this test.

3.6 Establish communications between the Control Room and the Diesel Room

3.7 IF the 1H Diesel Room is vitalized AND the diesel room door is to be blocked open, THEN notify Security that their assistance will be required.

3.8 IF available, THEN notify Predictive Analysis Department that vibration readings may he required to be obtained. (Reference 2.4.8)

3.9 Notify System Operator that this PT will be performed. (Reference 2.4.24)

4.0 PRECAUTIONS AND LIMITATIONS

_____ 4.1 Comply with the following guidelines when marking steps N/A:

- IF the conditional requirements of a step do not require the action to be performed, THEN mark the step N/A.
- IF this test is being performed as a Partial PT or Post-Maintenance Test, THEN mark inappropriate steps N/A.
- IF any other step is marked N/A, THEN have the SRO approve the N/A and submit a Procedure Action Request (PAR).

_____ 4.2 Do not perform testing on components undergoing maintenance.

_____ 4.3 IF a step cannot be performed OR the required action is not achieved, THEN stop the test and notify the SRO.

_____ 4.4 IF this test is being performed for surveillance, THEN record in the Action Statement Status Log any component NOT tested and the PT to be completed before returning the component to service.

_____ 4.5 Record any component NOT tested and the reason on the Cover Sheet.

_____ 4.6 Observe standard safety precautions. Comply with the Virginia Power Accident Prevention Manual.

_____ 4.7 IF "C" RSS Transformer is being supplied from Bus No. 3 AND 1H EDG is paralleled to the bus, THEN DO NOT switch Reactor Shunt Bank No. 1 in or out of service.

_____ 4.8 Monitor EDG load carefully to make sure that the load does not exceed 3000 KW.

_____ 4.9 No-Load Operation of the EDG should he minimized. The desired maximum limit is approximately 5 minutes of No-Load Operation at ≥ 900 RPM per occurrence. The time limit is intended as a conservative guideline for routine operations used to increase the life of the blower. If the EDG is run unloaded over 5 minutes at ≥ 900 RPM, the unloaded run time will be noted on the cover sheet and on I-LOG-12, which is routed to the System Engineer.

_____ 4.10 IF an emergency start signal is received while the EDG is in MAN LOCAL, THEN the EDG will NOT automatically start and load. The Speed Control Vernier should be placed at the high speed stop AND the Diesel Mode Selector Switch should be restored to MAN REMOTE or AUTO REMOTE for auto-start capability.

_____ 4.11 WHEN the Diesel Room door is blocked open, THEN a Fire Watch, who with SRO permission may be assigned concurrent duties, must be stationed in accordance with the requirements of Technical Requirements Manual, TK 7.2.

_____ 4.12 IF the EDG fails to start or trips at any time during the performance of this procedure, THEN ensure 0-PT-82.7, Emergency Diesel Generator Failure Record, is completed.

_____ 4.13 WHEN paralleling the EDG with a Bus, THEN the EDG voltage is to be adjusted to 1 to 2 volts higher than the Bus voltage. This slightly higher voltage setting is needed to compensate for the mismatch in the potential transformers. **(Reference 2.3.12)**

_____ 4.14 During hot weather conditions consideration should be given to leave the diesel room door unblocked since the hotter Turbine Building air may cause the diesel to operate at higher than desired temperatures.

_____ 4.15 IF 1-EG-TI-615H, 1H Emer Diesel Gen Lube Oil Str Outlet Temp Indr, indicates less than 110°F, THEN notify System Engineering. **(Reference 2.4.16)**

_____ 4.16 WHEN the 1H EDG is paralleled to the Emergency Bus, THEN the Load Shed and Load Sequencing timers, required by Tech Spec, are defeated, therefore the 1H EDG is inoperable. **(Reference 2.4.18)**

4.17 **IF** either Unit is in Mode 1 through 6 **OR** during the movement of recently irradiated fuel assemblies, **THEN** consult the following Tech Specs for applicability:

- Tech Spec 3.8.1, AC Sources - Operating
- Tech Spec 3.8.2, AC Sources - Shutdown

4.18 The steps regarding the elimination of water and /or oil in the cylinders may be marked N/A if the Engine Jacket Coolant Expansion Tank level has **NOT** changed in the previous 48 hours **AND** Lube Oil Strainer outlet temperature is > 110°F. **(Reference 2.3.18)**

4.19 Lube oil strainer outlet temperature below 110°F could cause the upper crankcase to flood, potentially causing exhaust stack fires or hydraulically Locking the engine. **(Reference 2.4.22)**

5.0 SPECIAL TOOLS AND EQUIPMENT

- Fluke, Model 8060A Multi-meter or equivalent (NQC data recorded on Attachment 9)
- Pressure gauges

NQC No.: _____ Cal Due Date: _____

NQC No.: _____ Cal Due Date: _____

6.0 INSTRUCTIONS

6.1 Do the following:

_____ **6.1.1** Record the reason for this test on the Cover Sheet. IF this test is being performed as a Post-Maintenance Test, THEN record the Work Order number on the Cover Sheet.

_____ **6.1.2** IF desired to use NQC gauges for the discharge pressure of one or both of the fuel oil transfer pumps? THEN install appropriate NQC gauge(s) on the discharge side of fuel oil transfer pumps 1-EG-P-1HA and/or 1-EG-P-1HB, as applicable. Ensure NQC data is recorded in Section 5.0.

6.1.3 Have Electricians connect a frequency meter in 1-EI-CB-8A in accordance with Attachment 9, Frequency Meter Installation/ Removal.

_____ **6.1.4** Dispatch an Operator to the Diesel Room With the following:

- Attachment 1, EDG Pre-Operational Check (EDG Room Operator), of this procedure
- Attachment 2, EDG Preparation And Start (EDG Room Operator), of this procedure
- Attachment 3, Rolling 1H EDG With Air, of this procedure
- Attachment 4, EDG Operation (EDG Room Operator), of this procedure
- Attachment 5, EDG Post-Operational Check (EDG Room Operator), of this procedure
- Attachment 6, 1H Diesel Relay Identification And Position, of this procedure
- 1-LOG-12, Emergency Diesel Generator Log (Operating)
- Admin Key for 1-EB-1000, 1H Bmer Diesel Gen Casing Starting Air Isol Valve (Reference 2.4.17)

6.2 Starting the EDG

NOTE: 0-PT-80 must be performed within one hour of an EDG becoming inoperable and every eight hours thereafter until the EDG has been declared operable.

_____ 6.2.1 Complete Attachment 1, EDG Pre-Operational Check (EDG Room Operator). Record on the Procedure Cover Sheet any discrepancies identified when performing Attachment 1 and any associated Work Request numbers.

_____ 6.2.2 Initiate and complete 0-PT-80, AC Sources Operability Verification, prior to EDG being declared inoperable.

_____ U1 SRO _____ U2 SRO 6.2.3 Have the Unit 1 SRO and Unit 2 SRO enter the appropriate Action of Tech Spec 3.8.1 or 3.8.2, as applicable, for an inoperable 1H EDG.

_____ 6.2.4 Place the 1H EMER DIESEL GENERATOR MODE SELECTOR SWITCH in the MAN LOCAL position.

_____ 6.2.5 Verify Annunciator Panel "H" A-6, EMER DG #1H SWITCH NOT IN AUTO REMOTE is LIT.

_____ 6.2.6 Initiate and complete 0-PT-80, AC Sources Operability Verification, within 1 hour of EDG being declared inoperable. (Reference 2.4.14)

_____ 6.2.7 Have the Operator in the Diesel Room perform Steps 1.1, 1.2, I.3, and 1.4 of Attachment 2, Section 1, Before Starting of Diesel.

NOTE: WHEN the Diesel Room door is blocked open, THEN a Fire Watch, who with SRO permission may be assigned concurrent duties, must be stationed in accordance with the requirements of TRM TR 7.2.

6.2.8 IF 1H EDG Room door is to he blocked open, THEN do the following:

SRO a. Verify another EQ barrier is NOT breached.

_____ b. IF the 1H Diesel Room is vitalized, THEN notify Security that the door is being blocked open.

_____ c. Post a Fire Watch in accordance with TRM 7.1.2 and 7.2.

_____ d. Block open the door.

_____ 6.2.9 Have the Operator in the Diesel Room perform Steps 1.5 through 1.7 of Attachment 2, Section 1, Before Starting of Diesel.

_____ 6.2.10 WHEN the Operator in the Diesel Room notifies the Control Room that the EDG is ready to start, THEN authorize the Operator to perform Attachment 2, Section 2, Starting The Diesel.

NOTE: No-Load Operation of the EDG should be minimized. The desired maximum limit is approximately 5 minutes of No-Load Operation at ≥ 900 RPM. The unloaded period starts when the EDG initially reaches 900 RPM. The time limit is intended as a conservative guideline for routine operations used to increase the life of the blower.

_____ 6.2.11 WHEN notified that the EDG has reached 900 RPM, THEN record the time:

Time diesel reached 900 RPM: _____

_____ 6.2.12 WHEN notified that the EDG has reached its high speed stop, THEN place the 1H EMER DIESEL GENERATOR MODE SELECTOR SWITCH in the MAN REMOTE position.

_____ 6.2.13 WHEN at least 3 seconds has passed, THEN turn synchronizer switch for 15H2, 4160V EMER BUS 1H FEED FROM EMER GEN 1H, to ON.

_____ 6.2.14 Record 1H EDG frequency displayed on the frequency meter below:

1H EDG frequency: _____ Hz

_____ 6.2.15 Verify that the frequency in Step 6.2.14 is between 59.5 Hz and 60.5 Hz. IF NOT, THEN notify the Unit 1 SRO. **(Reference 2.4.11)**

NOTE: A voltage between 107 volts and 130 volts in Step 6.2.16 corresponds to an actual EDG voltage between 3740 volts and 4580 volts.

6.2.16 Record 1H EDG voltage below:

1H EDG voltage: _____ volts

_____ 6.2.17 Verify that the voltage in Step 6.2.16 is between 107 volts and 130 volts. IF NOT, THEN notify the Unit 1 SRO.

_____ 6.2.18 Verify the EMER GEN 1H SPEED/LOAD CONTROL switch in the Control Room is functioning by adjusting the EDG frequency.

_____ 6.2.19 While continuing with this procedure, have Electricians remove the frequency meter from I-EI-CB-8A in accordance with Attachment **9.**

6.3 Loading **the EDG**

_____ 6.3.1 Adjust the EDG speed with the EMER GEN 1H SPEEDLOAD CONTRQL switch until the EDG frequency matches bus frequency.

_____ 6.3.2 Adjust 1H EDG (incoming) voltage to 1 to 2 volts higher than bus (running) voltage by adjusting the EMER GEN 1H EXCITER VOLTAGE CONTROI switch. **(Reference 2.3.12)**

_____ 6.3.3 Adjust the EMER GEN 1H SPEEDLOAD CONTROL switch so that the synchroscope moves slowly in the fast direction and completes one rotation in 20 seconds or longer. **(Reference 2.3.10)**

(CAUTION

KVAR will need to be controlled at a power factor of 1.0 (0 KVAR) when 1-EE-BKR-15H2 is closed **(Reference 2.4.12)**

_____ 6.3.4 WHEN the synchroscope needle reaches 1 minute to 12 o'clock as illustrated on Attachment 8, Synchroscope Closing Angle Indication, THEN close 15H2, 4160V EMER BUS 1H FEED FROM EMER GEN 1H, and record the time below: **(Reference 2.3.10)**

Time diesel loaded: _____

_____ 6.3.5 Do the following until KW and KVAR control is stable: **(Reference 2.4.12)**

- Using the EMER GEN 1H **SPEEDLOAD** CONTROL switch, load the 1H EDG to between 500 and 1000 KW.
- Adjust power factor to 1.0 (0 KVAR).

_____ 6.3.6 WHEN the KW and KVAR control is stable, THEN place synchronizer switch for 15H2, 4160V EMER BUS 1H FEED FROM EMER GEN 1H, in OFF. **(Reference 2.4.12)**

6.3.7 Over a 2- to 3-minute period, load the EDG between 1650 KW and 1750 KW.

6.3.8 Adjust the power factor to 1.0 (0 Kvar) and hold between 1650 KW and 1750 KW for 5 minutes.

6.3.9 Over a 2- to 3-minute period, load the EDG to between 2050 KW and 2150 KW.

6.3.10 Adjust the power factor to 1.0 (0 Kvar) and hold between 2050 KW and 2150 KW for 5 minutes.

NOTE: The load range given below is provided as a guide to avoid routine overloading of the EDG. Loads in excess of this range, for special testing purposes or because of fluctuations caused by changing bus loads, do not invalidate this test.

_____ 6.3.11 Over a 2- to 3-minute period, load the EDG to between 2500 KW and 2600 KW.

_____ 6.3.12 Record the time that loading is complete: _____

_____ 6.3.13 Adjust the output voltage for approximately 50 KVAR out.

_____ 6.3.14 IF available, THEN have Predictive Analysis Department obtain vibration readings. **(Reference 2.4.8)**

_____ 6.3.15 Run the EDG at a load between 2500 KW and 2600 KW for at least 60 minutes from the time recorded in Step 6.3.12.

_____ 6.3.16 Have the Operator in the Diesel Room complete Attachment 4

6.4 **Unloading the EDG**

_____ 6.4.1 Record the time load reduction begins: _____

_____ 6.4.2 Over a 2- to 3-minute period, reduce the load on the EDG to between 1650 KW and 1750 KW.

_____ 6.4.3 Adjust the power factor to 1.0 (0 Kvar) and hold between 1650 KW and 1450 KW for 5 minutes.

_____ 6.4.4 Over a 2- to 3-minute period, reduce the load on the EDG to below 100 KW.

_____ **6.4.5** Open 15H2, 4160V EMER BUS 1H FEED FROM EMER GEN 1H, and record time:

Time diesel unloaded: _____

_____ **6.4.6** Turn synchronizer switch for 15H2, 4160V EMER BUS 1H FEED FROM EMER GEN 1H, to ON.

6.4.7 Set EDG speed to approximately 900 rpm.

NOTE: The voltage in Step 6.4.8 corresponds to an actual Bus voltage between **4160** volts and 4200 volts.

_____ 6.4.8 Set incoming voltage to **119** volts to **120** volts.

_____ **6.4.9** Turn synchronizer switch for 15H2, 4160V EMERBUS 1H FEED FROM EMER GEN 1H, to OFF.

NOTE No-Load Operation of the EDG should be minimized. The desired maximum limit **is** approximately 5 minutes **of** No-Load Operation at ≥ 900 RPM. The unloaded period starts when the EDG output breaker is opened. The time limit **is** intended **as a** conservative guideline for routine operations used to increase the **life of** the blower.

6.4.10 **Let** EDG **run 3** to 5 minutes to cool. The cool-down period begins at the time recorded in Step **6.4.5.**

CAUTION

EDG Normal Stop, Emergency Stop, and Start pushbuttons **are** NOT located in the same places on Unit 1 and Unit 2 EDG Control Panels. WHEN starting or stopping the EDG, THEN it is important to use proper Self-Checking to ensure that the desired pushbuttons are pressed. (Reference **2.4.9)**

_____ 6.4.11 Press both NORMAL STOP pushbuttons **and** verify that the rpm readings have decreased to zero.

_____ **6.4.12** Record the time that the EDG was shut down: _____

NOTE: Performing the following steps will minimize the EDG unavailability time.

_____ 6.4.13 IF the EDG Room door was NOT blocked open, THEN record in the Narrative Log that the 1H EDG is available.

6.4.14 While continuing with this procedure, align the EDG to provide standby power as follows:

_____ a. Have the Operator in the Diesel Room initiate Attachment 5, EDG Post-Operational Check (EDG Room Operator).

_____ h. IF the EDG Room door was blocked open AND when notified that the EDG door is closed, THEN record in the Narrative Log the time that the door was closed and that the 1H EDG is available.

_____ c. WHEN Annunciator Panel J-B7, EMER DG 1H INTLKS NOT RESET, is received, THEN log in the Narrative Log that 1H EDG is unavailable.

_____ d. WHEN notified that Attachment 5 and Attachment 6 are completed, THEN perform Attachment 7, EDG Post-Operational Check (Control Room).

6.5 Record the following fuel levels:

_____ _____ • 1-EG-LG-106A, 1H Emergency Generator Day Tank Level Glass: ____ gal

_____ _____ • 1-EG-LI-100A for 1-EG-TK-2A, Underground Fuel Oil Storage Tank: ____ ft

_____ _____ • 1-EG-LI-100B for 1-EG-TK-2B, Underground Fuel Oil Storage Tank: ____ ft

_____ 6.6 IF the EDG load exceeded 3,000 KW, THEN initiate an Engineering Evaluation to determine the effect on the EDG.

_____ 6.7 IF installed, THEN while continuing with this procedure, remove NQC gauge(s) installed on the discharge side of fuel oil transfer pumps 1-EG-P-1HA and/or 1-EG-P-1HB, as applicable.

7.0 FOLLOW-ON

7.1 Acceptance Criteria

_____ 7.1.1 **Fuel** level in Day Tank 1-EG-TK-1H is at least 450 gallons as recorded in Step ***6.5.***

_____ 7.1.2 **Amount** of fuel in Storage Tank I-EG-TK-2A is at least 9.41 feet as recorded in Step 6.5 (corresponds to 45,000 gallons).

_____ 7.1.3 Amount of fuel in Storage Tank 1-EG-TK-2B is at least 9.41 feet as recorded in Step ***6.5*** (corresponds to 45,000 gallons).

7.1.4 One of the following conditions was met. **Mark** non-applicable condition N/A.

_____ • BOTH Fuel Oil Pumps were operable and transferred oil to the Day Tank as indicated **in** Attachment 4.

_____ • ~~ONLY ONE~~ **Fuel** Oil Pump was operable and transferred **oil to** the Day Tank as indicated in Attachment 4.

_____ 7.1.5 The EDG started and gradually accelerated to 900 rpm in Attachment 2.

_____ 7.1.6 The EDG voltage was between 107 volts and 130 volts as recorded in Step 6.2.16.

_____ 7.1.7 The EDG frequency was between 59.5 Hz and 60.5 Hz as recorded in Step 6.2.14. **(Reference 2.4.11)**

_____ 7.1.8 The EDG was gradually loaded to between 2500 KW and 2600 KW and **ran** at that load for at least 60 minutes as indicated in Steps 6.3.7 through 6.3.15.

_____ 7.1.9 The fuel level in the Day Tank was observed to increase as indicated in Attachment 4, Step 4, demonstrating 1-EG-254 opened and allowed partial flow.

_____ 7.t. 10 The fuel level in the day tank was observed to increase as indicated in Attachment 4, Step 8, demonstrating 1-EG-278 opened and allowed partial flow.

_____ 7.1.11 The pressure in the Start-Air Tanks was greater before the start of the engine than after as compared in Attachment 2, Section 2, Step 2.10, demonstrating 1-EB-15 and 1-EB-65 opened and allowed partial flow.

_____ 7.1.12 The Diesel engine started and the pressure in the Start-Air Tanks was greater before the start of the engine than after the engine was started as compared in Attachment 2, Section 2, Step 2.10, demonstrating 1-EG-SOV-600HA and 1-EG-SOV-600HB opened and allowed sufficient flow AND that 1-EG-SOV-601HA operated satisfactorily.

_____ 7.1.13 The following attachments were completed and the 1H EMER DIESEL GENERATOR MODE SELECTOR SWITCH is in AUTO REMOTE demonstrating the EDG is aligned to provide standby power:

- Attachment 5, EDG Post-Operational Check (EDG Room Operator)
- Attachment 6, 111 Diesel Relay Identification And Position
- Attachment 7, EDG Post-Operational Check (Control Room)

7.2 **Follow-On Tasks**

7.2.1 IF any of Steps 7.1.1 through 7.1.13 cannot be satisfied, THEN do the following:

_____ a. Declare the appropriate component(s) inoperable.

_____ b. Submit a Plant Issue.

_____ c. Record the component(s) in the Action Statement Status Log.

_____ d. Issue a Work Request for the inoperable component(s) and record the Work Request number on the Cover Sheet.

_____ e. Record the reason the step cannot be satisfied on the Cover Sheet.

U1 SRO U2 SRO f. Have the Unit 1 SRO and Unit 2 SRQ ensure the appropriate Action of Tech Spec 3.8.1 or 3.8.2, as applicable, has been entered due to an INOPERABLE 1H EDG.

7.2.2 IF all of Steps 7.1.1 through 7.1.13 are satisfied, THEN do the following:

U1 SRO U2 SRO a. Have the Unit 1 SRO and the Unit 2 SRQ clear the Action of Tech Spec 3.8.1 or 3.8.2, as applicable, that was entered in Step 6.2.3.

_____ b. Suspend performance of 0-PT-80.

_____ 7.2.3 IF the EDG ran unloaded at ≥ 900 RPM for greater than 5 minutes during the diesel start, THEN note the time on the cover sheet and on 1-LOG-12.

_____ 7.2.4 IF the EDG ran unloaded at ≥ 900 RPM for greater than 5 minutes during the diesel shutdown, THEN note the time on the cover sheet and on I-LOG-12.

7.3 Completion Notification

_____ Notify the SRO that this test is complete.

Completed by: _____ Date: _____

(Page 1 of 4)

Attachment 4
€DG Pre-Operational Check (EDG Room Operator)

NOTE: Steps may be performed in any order.

1. Verify that none of the following Auxiliary Systems leak:

_____ • Fuel Oil

_____ • Lube Oil

_____ • Governor

_____ • Coolant

_____ 2. IF excessive amounts of leakage are visible around the engine, THEN clean the area AND notify the SRO.

_____ 3. Determine trend of the Engine Jacket Coolant Expansion Tank level by checking Safeguards Logs for at least the previous 48 hours. IF level is trending down, THEN perform the following:

_____ 3.1 Notify the SRO.

_____ 3.2 Inspect the engine piping, radiators, injection compartments, exhaust piping, and coolers area to determine if leakage is external.

_____ 3.3 IF inspection identifies the leak problem, THEN submit a Work Request to have repairs made.

(Page 2 of 4)

Attachment 1
EDG Pre-Operational Check (EDG Room Operator)

4. Verify the following: (check)

	Equipment	Indication/Position
_____	• 1-EG-P-1HA, 1HA Emergency Diesel Generator Fuel Oil Pump	AUTO
_____	• I-EG-P-IHB, 1HB Emergency Diesel Generator Fuel Oil Pump	AUTO
_____	• 1-EB-1000, 1H Emer Diesel Gen Casing Starting Air Isol Valve	LOCKED OPEN
_____	• Exciter Regulator MAN/AUTO select SW	AUTO
_____	• Generator Field switch	OFF
_____	• Exciter Power On light	LIT
_____	• Field Flashing Power On light	LIT
_____	• Control Room Emergency switch	NORMAL
_____	• 1-EG-LG-106A, 1H Emergency Diesel Gen Day Tank Level Glass	AT LEAST 700 GAL.
_____	• DC Aux Fuel Pump switch	**AUTO**
_____	• 1-EG-P-4H, Lube Oil Pump switch	AUTO
_____	• 1-EB-EG-1A DISC, 1H Lube Oil Heater Disconnect	ON
_____	• Electric Lube Oil Heater Control switch	ON
_____	• Control Power Available Lights	LIT
_____	• Battery Power	AVAILABLE
_____	• Aux DC FO Pump, Breaker CB #7	CLOSED
_____	• Standby Lube Oil Pump	RUNNING
_____	• Governor oil level	AT LEAST TOP LINE
_____	• Expansion Tank level	AT LEAST 1/2 FULL
_____	• Start Air pressure	AT LEAST 200 PSIG
_____	• I-EG-P-ZH, Prelube Pump	AUTO
	• Electrical Panel doors	CLOSED

(Page 3 of 4)

Attachment 1

EDG Pre-Operational Check (EDG Room Operator)

5. IF the Jacket Cooling Keepwarm System is NOT secured in accordance with 0-GOP-5.5, EDG Hot Weather Operations, THEN ensure the following conditions exist:

_____ • Control switch for 1-EG-P-3H, 1H Emer Diesel Generator Coolant Standby Circ Pp, in AUTO.

• Control switch for 1-EG-HTR-601H, 1H Emer Diesel Generator Coolant Standby Heater, in AUTO.

• 1-EG-P-3H, 1H Emer Diesel Generator Coolant Standby Circ Pp, is RUNNING.

_____ 6. IF 0-GOP-4.2, Extreme Cold Weather Operations, is NOT in effect, THEN verify the control switch for 1-HV-F-22A, 1H Emergency Diesel Gen Room Exhaust Fan, is in AUTO.

CAUTION

Lube oil strainer outlet temperature below 110°F could cause the upper crankcase to flood, potentially causing exhaust stack fires or hydraulically locking the engine. (Reference 2.3.20)

_____ 7. Record the following:

a. Lube oil temperature: _____ _____

b. Jacket Coolant temperature to engine: _____

c. Speed (Woodward Governor vernier setting): _____

d. Speed Droop (Woodward Governor setting): _____ _____

e. Load Limit (Woodward Governor setting): _____

_____ 8. IF the Lube Oil level is less than 1.5 inches above the full mark, THEN notify Maintenance Department.

(Page 4 of 4)

Attachment I

EDG Pre-Operational Check (EDG Room Operator)

_____ 9. Perform an annunciator lamp test. IF any abnormal annunciators are LIT, THEN notify the SRQ.

_____ 10. Check the Diesel Room for cleanliness. IF abnormal conditions are present, THEN notify the SRO.

(Page 1 of 5)

Attachment 2
EDG Preparation And Start (EDG Room Operator)

1. SECTION I: BEFORE START OF DIESEL

CAUTION

Severe engine damage can result if the engine is started with water and/or oil in the cylinder liners. Step 1.1 and Attachment 3, Rolling 1H EDG With Air, ensure there is no water and/or oil in cylinder liners prior to engine start. **(References 2.3.18 and 2.4.19)**

NOTE: Attachment 3, Rolling 1H ED6 With Air, will require coordination between the Control Room Operator and the Mechanical Maintenance Department.

1.1 IF *ANY* of the following apply AND the System Engineer / ED6 Component Engineer concurs that an air roll is required, THEN perform Attachment 3, Rolling 1H EDG With Air: **(Reference 2.3.18)**

- 1-EG-TI-615H, 1H Emer Diesel Gen Lube Oil Str Outlet Temp Indr, indicates ≤ **110°F.** (Attachment 1, Step 7.a)
- Engine Jacket Coolant Expansion Tank level has changed during the previous **48** hours. (Attachment 1, Step 3)

1.2 Record pressures in Start-Air Tanks:

- 1-EG-TK-1HA: _____ psig
- 1-EG-TK-1HB: _____ psig

1.3 Verify that the pressures in Start-Air Tanks are within 10 psig of each other. IF NOT, THEN do the following:

a. Start 1-EG-C-1HA or 1-EG-C-1HB by bleeding air from the sensing lines.

(Page 2 of 5)

Attachment 2
EDG Preparation And Start (EDG Room Operator)

b. Stop 1-EG-C-1HA or 1-EG-C-1HB when the pressures in the Start-Air Tanks are within 10 psig of each other.

c. Record pressures in Start-Air Tanks:

- 1-EG-TK-1HA: _____ psig

_____ - 1-EG-TK-1HB: _____ psig

1.4 Place the control switches for the following compressors in OFF:

_____ - 1-EG-C-1HA

- 1-EG-C-1HB

1.5 Record the original position of the vernier: _____

CAUTION

Stops on the Speed Control device may prohibit moving the vernier back to 4.0. Forcing the vernier may damage the stop.

1.6 Turn the vernier back to 4.0 or to the slow speed step, whichever comes first, verify that each full revolution of the knob changes the vernier indicator by one whole number.

_____ 1.7 Notify the Operator in the Control Room that the EDG is ready for start in accordance with Section 2 of this attachment.

(Page 3 of 5)

Attachment 2
EDG Preparation And Start (EDG Room Operator)

2. **SECTION II: STARTING THE DIESEL**

2.1 Observe the following precautions:

_____ **a.** Do NOT preluhe the EDG for more than **3** minutes.

b. Start EDG within 10 minutes of preluhe completion.

c. To avoid having lube oil enter the exhaust manifold, roll engine using Attachment **3,** Rolling 1H EDG With Air, if one of the following conditions exists:

- EDG prelubed for more than **3** minutes.
- EDG NOT started within 10 minutes of prelube completion

d. IF necessary, THEN adjust the vernier to ensure that lube oil pressure is greater than 17 psig within **30** seconds after **start** or the EDG will trip.

_____ e. Adjust the vernier to pass quickly through critical speeds

2.2 IF 1H Diesel HAS been started OR pre-lubed within the last **48** hours, THEN do the following: **(Reference 2.4.17)**

_____ **a.** WHEN Control Room authorization **is** made, THEN place and hold the Prelube *Pump* Control Switch in the MANUAL position.

_____ b. Continue with Step 2.4 and mark Step **2.3** N/A.

(Page 4 of 5)

Attachment 2
EDG Preparation And Start (EDG Room Operator)

2.3 IF 1H Diesel has NOT been started OR pre-lubed within the last 48 hours, THEN do the following: (Reference 2.4.17)

_____ a. Observe 1-EG-PI-608H, Lube Oil Press, and record the reading:

_____ psig (Reference 2.4.3)

b. WHEN Control Room authorization is made, THEN place and hold the Prelube Pump Control Switch in the MANUAL position WHEN one of the following occurs, THEN continue with Step 2.4 AND mark the item that does not occur N/A.

_____ 1. 1-EG-PI-608H, Lube Oil Press, indicates a slight deflection, 1 to 3 psi greater than existing pressure. (Reference 2.4.3)

_____ 2. The 2-minute time for the prelube has expired. (Reference 2.4.3)

_____ 2.4 Press and hold the START button.

_____ 2.5 WHEN the EDG speed is at least 250 rpm, THEN release the START button.

_____ 2.6 WHEN the Lube Oil pressure reaches between 5 and 10 psig, THEN release the Prelube Pump Control Switch.

NOTE: EDG should be about 945 rpm at the high speed stop.

_____ 2.7 Over a 2- to 3-minute period, return the vernier to its high speed stop. Notify the Control Room when the diesel speed reaches 900 RPM.

_____ 2.8 WHEN the vernier is at the high speed stop, THEN notify the Control Room.

(Page 5 of 5)

Attachment 2
EDG Preparation And Start (EDG Room Operator)

2.9 Record the pressures in the Start-Air Tanks:

_____ • 1-EG-TK-1HA: _____ psig

• 1-EG-TK-1HB: _____ psig

NOTE: Failure **of** one Air-Start Solenoid Valve does not *make* the EDG inoperable.

2.10 Verify that the pressures in the Start-Air **Tanks** recorded in Section 1, Step 1.2 or 1.3.c, **were** greater than the pressures recorded in Section 2, Step 2.9. IF NOT, THEN submit an Emergency **Work** Request **to** have the Solenoid Valve repaired.

2.11 Place the following air compressor Control Switches in AUTO.

_____ _____ • 1-EG-C-1HA

_____ _____ • 1-EG-C-1HB

_____ _____ 2.12 Verify pressure in Start-Air Tanks, I-EG-TK-1HA AND 1-EG-TK-IIIB **is** between 200 psig and 245 psig.

(Page 1 of 4)

Attachment 3
Rolling 1H EDG With Air

_____ 1. Have the 1H EDG Control Room Operator ensure the 1H EMER DIESEL GENERATOR MODE SELECTOR SWITCH is in MAN LOCAL.

_____ 2. Verify the Control At Engine lamp is LIT on the engine gage board.

NOTE: The ENGINE STOP pushbuttons (located on the CRE Panel) are NOT required **to** be held to prevent the EDG **from** starting.

3. Initiate an Emergency Trip signal for 1H EDG as follows:

_____ 3.1 Verify 1H EDG is NOT running.

_____ SV 3.2 Simultaneously depress and release both ENGINE STOP buttons on the CRE Panel. (Reference 2.4.23)

_____ 3.3 Verify with **the** 1H EDG Control Room Operator that Annunciator "J" Panel **B-7,** EMER DG 1H INTLKS NOT RESET, is LIT.

_____ 3.4 Verify with the 1H EDG Control Room Operator that the SHUTDOWN RELAY STATUS LIGHT is NOT LIT.

_____ 3.5 Verify that local Annunciator **A-5,** SHUTDOWN INTERLOCKS NOT RESET is LIT.

_____ 3.6 Verify the fuel rack position indicator, Percent Load (Indication Only), on the governor **is** indicating the MM FUEL position. IF NOT in the MIN FUEL position, THEN notify Engineering. (Reference 2.4.21)

_____ **4.** IF 1H Diesel **has** NOT been started OR pre-luhed within the last **48** hours, THEN place AND hold **the** Prelube Pump Control switch in **MAN** until one of the following (Reference 2.4.17)

- 1-EG-PI-608H, Lube Oil Pressure, indicates a slight deflection (1 to **3 psig** greater than existing pressure).
- The 2 minute time for prelube has expired.

(Page 2 of 4)

Attachment 3
Rolling 1H EDG With Air

_____ 5. Unlock and close 1-EB-1000, 1H Emer Diesel Gen Casing Starting Air Isol Valve. **(Reference 2.4.17)**

_____ MECH 6. Remove all 12 cylinder petcock valve safety caps.

_____ MECH 7. Open all 12 cylinder petcock valves using the Tee handle wrench or a 5/8-inch wrench or socket.

8. Determine the number of complete revolutions the 1H EDG **must** be rotated **as** follows:

_____ 8.1 IF this Attachment **is** being performed for at least one of the following reasons, THEN record **"1** to **2"** in Step **8.3:**

- 1-EG-TI-615H, 1H Emer Diesel Gen Lube Oil Str Outlet Temp Indr, indicates ≤ 110°F.
- Engine Jacket Coolant Expansion Tank level has changed during the previous **48** hours.

_____ 8.2 IF this Attachment **is** being performed for at least one of the following reasons, THEN record "5 to 7" in Step **8.3:**

- EDG prelubed for more than **3** minutes.
- EDG not started within 10 minutes of prelube completion.

_____ 8.3 Record the number of complete revolutions the 1H EDG must be rotated:

_____ complete revolutions

(Page 3 of 4)

Attachment 3
Rolling 1H EDG With Air

CAUTION

All cylinder petcocks shall **be** inspected during engine rotation for the presence of water and/or oil. IF any water is discharged from any cylinder petcock, THEN 1H EDG shall NOT BE **STARTED** and the **SRQ** and the Component Engineer should be notified immediately of **the** quantity and type of water.

NOTE: The diesel should be rotated **slowly so** that the petcocks can **be** monitored for water and/or oil escaping.

9. Slowly rotate the IH EDG with starting air as follows:

_____ 9.1 Have a second Operator observe **the** shaft for rotation

9.2 Use one of the following manual solenoid overrides to slowly rotate the 1H EDG the number of complete revolutions recorded in Step **8.3:**

- 1-EG-SOV-600HA, 1H Emergency Diesel Gen Starting Air SQV
- 1-EG-SOV-600HB, 1H Emergency Diesel Gen Starting **Air** SOV

9.3 WHEN the Operator observing the shaft rotation indicates the appropriate number of complete revolutions have occurred, THEN close **the** manual solenoid override.

_____ _____ MECH IV 10. Close all 12 cylinder petcock valves (clockwise). These valves backseat when closed and the stems will rise when closing.

_____ MECH 11. Install cylinder petcock valve safety caps finger tight (NO wrenches).

_____ _____ 12. Open and Iock 1-EB-1000, 1H Emer Diesel Gen Casing Starting Air Isol Valve. (Reference **2.4.17**)

(Page 4 of 4)

Attachment 3
Rolling 1H EDG With Air

13. **Have** the 1H EDG Control Room Operator reset the Emergency Trip signal as follows:

    13.1 Depress and **release** the EMER GEN 1H ALARM & SHUTDOWN RESET button on **the** 1H EDG Control Panel.

    13.2 Wait ***60*** seconds before continuing.

    13.3 Verify Annunciator "J" Panel B-7, EMER DG 1H INTLKS NOT RESET is NOT LIT.

    13.4 Verify that the SHUTDOWN RELAY STATUS LIGHT *is* LIT on the 1H EDG Control Panel.

14. Verify **that** local Annunciator A-5, **SHUTDOWN** INTERLOCKS NOT RESET is NOT LIT.

(Page 1 of 2)

Attachment 4
EDG Operation (EDG Room Operator]

NOTE: Readings for **1-LOG-12,** Emergency Diesel Generator Log (Operating), must **be** taken at the same **points** in the EDG *run* in order to have valid data for evaluation.

1. Complete **I-LOG-12,** Emergency Diesel Generator Log (Operating), by doing the following:

_____ 1.1 **20** minutes after reaching a load **of** between **2500** KW and **2600 KW,** take reading No. **I.**

_____ 1.2 40 minutes after reaching a load of between **2500 KW** and **2600 KW,** and **while the** EDG is still loaded to between **2500** KW and **2600 KW,** take reading **No. 2.**

_____ 2. Make a thorough inspection of the EDG during operation. IF **ANY** of the following exist, THEN notify the Unit I **SRO.**

(✓)

_____ **Unusual** vibration or noise

_____ **Fuel** or lubricating oil leaks

_____ Cooling System leaks

_____ Exhaust System leaks

_____ Starting Air System leaks

_____ Wear **or** erratic movement of injection **pump** control **racks** or governor linkage

_____ Stuck louvers

_____ 3. **Start** Fuel Oil Pump 1-EG-P-1HA.

_____ 4. Verify that the fuel level in the Day Tank is rising.

(Page 2 of 2)

Attachment 4
EDC Operation (EDG Room Operator)

_____ 5. Record the **Fuel** Oil Pump Discharge Pressure indicated by 1-EG-PI-105A or NQC gauge:

_____ psig

_____ 6. Turn the 1-EG-P-1HA Control Switch to OFF.

_____ 7. Start **Fuel** Oil Pump 1-EG-P-1HB.

_____ 8. Verify that the fuel **level** in the Bay Tank is rising.

_____ 9. Record the Fuel Oil Pump Discharge Pressure indicated by 1-EG-PI-105B or NQC gauge:

_____ psig

10. Return the following control switches to **AUTO:**

_____ _____ • I-EG-P-1HA

• 1-EG-P-1HB

11. **Notify** the Operator in the Control Room that Attachment **4** is complete.

(Page 1 *of* 6)

Attachment 5

EDG Post-Operational Check (EDG Room Operator)

1. IF the EDG Room door is blocked open, THEN do the following:

_____ **1.1** Unblock the diesel room door.

_____ **1.2** Record time EDG Room door is closed and notify Control Room that the 1H EDG is available: _____

_____ **1.3** IF the 1H Diesel Room is vitalized, THEN notify the Security Department

_____ 1.4 Discontinue fire watch.

NOTE: Steps 2 through 7 may be performed in any order.

NOTE. The Standby Lube Oil Pump should start 9 to 11 minutes after EDG shutdown. (Reference 2.4.20)

2. Verify operability of Standby Lube Oil Pump tinier as follows:

_____ **2.1** WHEN 1H EDG has been shutdown for 8 minutes, THEN verify Standby Lube Oil Pump is NOT running. IF the pump is running, THEN at completion of the post-operational checks, submit a WR that the pump started early. (Referenee 2.4.20)

_____ *2.2* WHEN 1H EDG has been shutdown for 12 minutes, THEN verify the Standby Lube Oil Pump is running. IF pump is NOT running THEN at completion of the post-operational checks, submit a WR for the pump not starting within the required time. (Reference 2.4.20)

(Page 2 of 6)

Attachment 5

EDG Post-Operational Check (EDG Room Operator)

NOTE: Performance of Step 3 should commence 15 to 30 minutes after 1H EDG has been shutdown. Subsequent steps may be performed while waiting for the EDG shut down time provided Step 3 be returned to within *30* minutes after EDG shut down. **(Reference 2.4.22)**

3. WHEN 1H EDG has been shutdown for 15 minutes, THEN remove oil from upper cylinders as follows: **(References 2.4.19, 2.4.9, and 2.4.22)**

   3.1 Unlock and close 1-EB-1000, 1H Emer Diesel Gen Casing Starting Air Isol Valve.

   3.2 Ensure the CONTROL ROOM EMERGENCY switch is in NORMAL.

   NOTE: The ENGINE STOP pushbuttons (located on the CRE Panel) are NOT required to be held to prevent the EDG from starting.

   _____ _____ SV 3.3 Simultaneously depress BOTH ENGINE STOP pushbuttons (located on the CRE Panel). **(Reference 2.4.23)**

   _____ 3.4 Have the 1H EDG Control Room Operator verify that Annunciator Panel J-B7, EMER DG 1H INTLKS NOT RESET, is LIT.

   _____ 3.5 Verify that local Annunciator A-5, SHUTDOWN INTERLOCKS NOT RESET, is LIT.

   _____ 3.6 Verify the fuel rack position indicator, Percent Load (Indication Only), on the governor is indicating the MIN FUEL position. IF NOT in the MIN FUEL position, THEN notify Engineering. **(Reference 2.4.21)**

(Page 3 of 6)

Attachment 5
EDG Post-Operational Check (EDG Room Operator)

NOTE: Adequate communications should be maintained between the Diesel Room and the Control Room.

3.9 Quickly rotate the EDG 5 to 7 revolutions using starling air as follows:

_____ a. **Have** a **second** Operator observe the shaft for rotation. (Reference 2.4.19)

b. **Use** one of the following manual solenoid overrides to quickly rotate the EDG 5 to **7** revolutions (Reference **2.4.19)**

_____ • 1-EG-SOV-600HA, 1H Emergency **Diesel** Gen Starting Air SOV

• 1-EG-SOV-600HB, 1H Emergency Diesel Gen Starting Air SOV

_____ c. WHEN the Operator observing the shaft rotation indicates 5 to 7 revolutions have occurred, THEN close the manual solenoid override.

d. Have the 1H EDG Control Room Operator do the following:

1. Place the 1H EMER DIESEL GENERATOR MODE SELECTOR SWITCH in MAN LOCAL.

2. Depress and release **the** EMER GEN 1H ALAKM & SIIUTDOWN RESET button on the 1H EDG Control Panel.

3. Wait 60 seconds before continuing

_____ 4. Verify that Annunciator Panel J-B7, EMER DG 1H INTLKS NOT RESET, is NOT **LIT.**

_____ 5. Verify that **the** white SHUTDOWN RELAY STATUS LIGHT on the 1H EDG Control Panei is LIT.

(Page 4 of 6)

Attachment 5

EDG Post-Operational Check (EDG Room Operator)

e. Verify that local Annunciator A-5, SHUTDOWN INTERLOCKS NOT RESET, is NOT LIT.

_____ _____ f. Open and lock 1-EB-1000, 1H Emer Diesel Gen Casing Starting Air Isol Valve.

g. Complete Attachment 6, 1H Diesel Relay Identification And Position, to verify relay positions.

(Page 5 of 6)

Attachment 5
EDG Post-Operational Check (EDG Roam Operator)

4. Verify the following: (check)

✔	Equipment	Indication/Position
	• CO_2 System	Normal
____	• I-EG-P-IHA, 1HA Emergency Diesel Generator Fuel Oil Pump	Auto
____	• 1-EG-P-1HB, 1HB Emergency Diesel Generator Fuel Oil Pump	Auto
____	• 1-EG-C-1HA, 1H Emergency Diesel Gen Stg Air Cprsr	Auto
____	• 1-EG-C-1HB, 1H Emergency Diesel Gen Stg Air Cprsr	Auto
____	• 1H1 and 1H1-1A 480-Volt Power	Available
____	• Exciter Regulator Man/Auto Select SW	Auto
____	• Generator Field Switch	Off
____	• 1-EG-LG-106A, 1H Emergency Diesel Gen Day Tank Level Glass	700-875 gallons
____	• DC Aux Fuel Pump	Auto
____	• 1-EG-P-4H, Lube Oil Pump	Auto
____	• 1-EE-EG-1A DISC, 1H Lube Oil Heater Disconnect	On
____	• Electric Lube Oil Heater Cantrol Switch	On
____	• Control Power Available Lights	Lit
____	• Battery Power	Available
____	• Aux DC FO Pump Breaker CB 7	On
____	• Starting Air Pressure	At least 200 psiy
____	• Lube Oil Sump Level	At least 1-1/2 inches above full mark
____	• Coolant Expansion Tank Level	At least 1/2 full
____	• Louvers on South Wall	Closed
____	• Battery Charger Voltage	> 129 volts

(Page 6 of 6)

Attachment 5

ED6 Post-Qperational Check (EDG Room Operator)

5. IF the Jacket Cooling Keepwarm System is NOT secured in accordance with 0-GOP-5.5, EDG Hot Weather Operations, THEN verify the following:

_____ • Control switch for 1-EG-P-3H, 1H Emer Diesel Generator Coolant Standby Circ Pp, in AUTO.

_____ • Control switch for 1-EG-HTR-601H, 1H Emer Diesel Generator Coolant Standby Heater, in AUTO.

_____ • 1-EG-P-3H, 1H Emer Diesel Generator Coolant Standby Circ Pp, is RUNNING.

6. IF 0-GOP-4.2, Extreme Cold Weather Operations, is NOT in effect, THEN verify the control switch for 1-HV-F-22A, 1H Emergency Diesel Gen Room Exhaust Fan, is in AUTO.

7. Do the following:

_____ 7.1 Verify that Step 3 is complete.

7.2 Check and reset the Annunciator Panel.

_____ _____ 7.3 Verify Load Limit (Woodward Governor setting) is at MAX FUEL position

_____ _____ 7.4 Verify Speed Droop (Woodward Governor setting) is at the 0 Position.

_____ 8. Verify that the required independent verifications have been completed.

9. Notify Control Room Attachment 5 and Attachment 6 are complete.

(Page 1 of 2)

Attachment 6
1H Diesel Relay Identification And Position

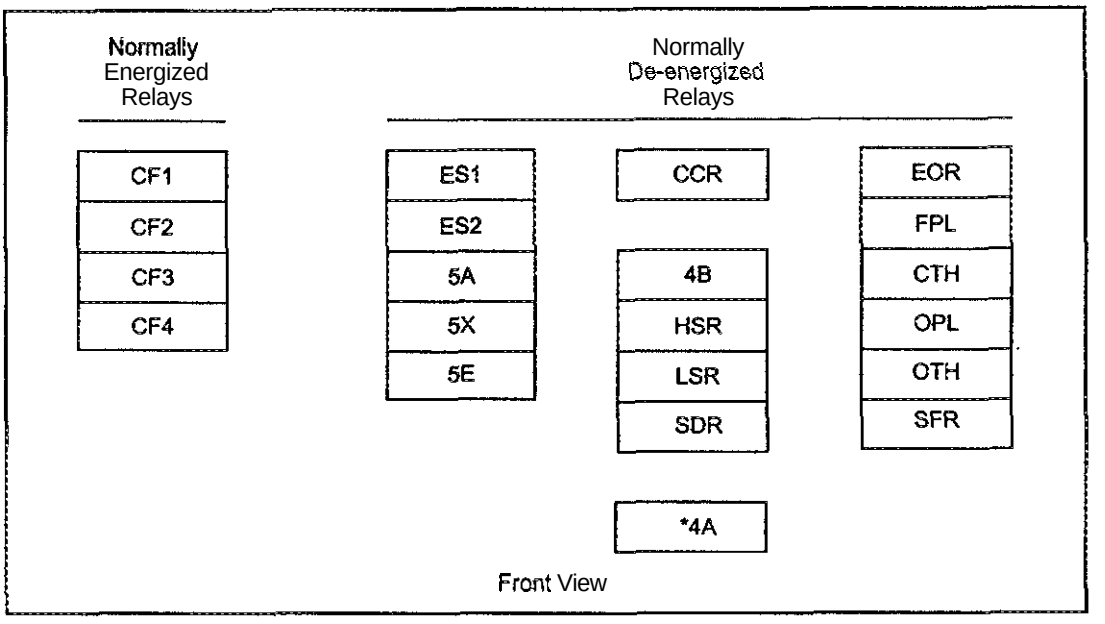

NOTE Relay 4A for 1H EDG is a different type of relay. When relay 4A is de-energized. the metal rod sticks out approximately 1/2 inch. When relay 4A is energized, a white plastic collar is exposed which is approximatley 1/2 inch in length The total length of the rod and the collar is approximately one inch when the relay is energized.

Dsenergized 4A Energized

Relay-Side View

Graphic No; SV1249

EPG RELAY CABINET–TYPICAL

(Page 2 of 2)

Attachment 6
1H Diesel Relay Identification And Position

All relays except 4A

Energized Position | Deenergized Position

Relay - Side View

Check (✔) the position of the following relays. For any relays out of position, notify the SRO immediately.

Energized		Deenergized	
_____ CF1	_____ ES1	_____ CCR	_____ EOR
_____ CF2	_____ ES2		_____ FPL
_____ CF3	_____ 5A	_____ 413	_____ CTH
_____ CF4	_____ 5x	_____ HSR	_____ OPL
	_____ 5E	_____ LSR	_____ OTA
		_____ SDR	_____ SFR
		_____ 4A	

(Page 1 of 2)

Attachment 7

EDG Post-Operational Check (Control Room)

_____ 1. IF 1H EDG was shut down by a trip signal, THEN notify the Electrical Department.

2. IF the SHUTDOWN RELAY STATUS LIGHT is NOT LIT, THEN perform the following:

_____ 2.1 Have 1H EDG Room Operator ensure the CONTROL ROOM EMERGENCY switch is in NORMAL.

_____ 2.2 Verify Annunciator "J" Panel B-7, EMER DG 1H INTLKS NOT RESET, is LIT.

_____ 2.3 Place the 1H EMER DIESEL GENERATOR MODE SELECTOR SWITCH in MAN LOCAL.

_____ 2.4 Depress and release the EMER GEN 1H ALARM & SHUTDOWN RESET button on the 1H EDG Control Panel.

_____ 2.5 Wait 60 seconds before continuing

2.6 IF Annunciator "J" Panel B-7, EMER DG 1H INTLKS NOT RESET, is LIT, THEN perform the following:

_____ a. Nave BH EDG Room Operator reset the Manual Overspeed using the red RESET LEVER on the engine above the Woodward Governor.

_____ b. Depress and release the EMER GEN 1H ALARM & SHUTDOWN RESET button on the 1H EDG Control Panel.

_____ c. Verify Annunciator "J" Panel B-7, EMER DG 1H INTLKS NOT RESET, is NOT LIT.

3. IF annunciator " H Panel H-1, EMER DIESEL GEN #1H DIFFERENTI,, is LIT, THEN perform the following:

_____ 3.1 Have 1H EDG Room Operator ensure the CONTROL ROOM EMERGENCY switch is in NORMAL.

(Page 2 of 2)

Attachment 7
EDG Post-Operational Check (Control Room)

_____ 3.2 Place the 1H EMER DIESEL GENERATOR MODE SELECTOR SWITCH in MAN LOCAL.

_____ **3.3** **Depress** and release the EMER GEN 1H EXCITER RESET button on the 1H EDG Control Panel.

_____ **3.4** Wait ***60*** seconds before continuing.

_____ **3.5** Verify Annunciator "H" Panel H-1, EMER DIESEL GEN #1H DIFFERENTL, is NOT LIT.

SRO

4. Have the SRO determine status of the 1H EDG and check (✔) applicable **status** below: Mark remaining choices N/A.

   _____ Operable

   _____ Available

   _____ NOT Operable and NOT Available

_____ _____ 5. IE the SRO determined the 1H EDG is NOT Operable **and** NOT Available, THEN ensure the 1H EMER DIESEL GENERATOR MODE SELECTOR SWITCH is in MAN LOCAL.

6. IF the SRO determined the 1H EDG is Operable OR Available, THEN do the following:

   6.1 Place the 1H EMER DIESEL GENERATOR MODE SELECPOR **SWITCH** in AUTO REMOTE.

   _____ 6.2 Verify Annunciator "H" Panel A-6, EMER DG #1H SWITCH NOT IN AUTO REMOTE, is NOT LIT.

   _____ _____ 6.3 Ensure control switch for 15H2, 4160V EMER BUS 1H FEED FROM EMBK GEN 1H, is in AUTO-AFTER-TRIP.

   _____ 6.4 Log in the Narrative Log that the 1H EDG is available.

(Page 1 of 1)

Attachment 8

Synchroscope Closing Angle Indication

(Reference 2.3.10)

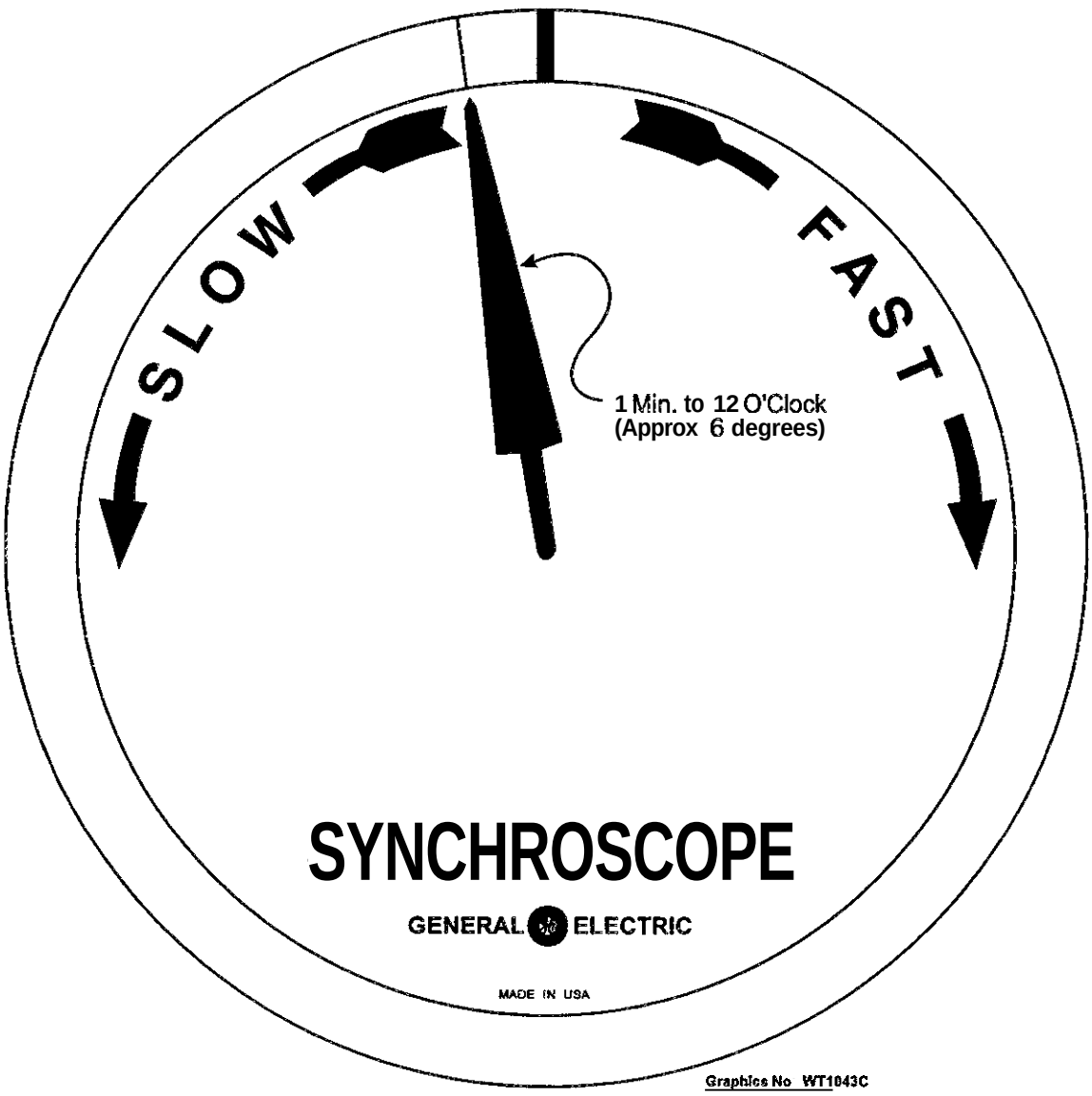

(Page 1 of 1)

Attachment 9
Frequency Meter Installation / Removal

ELEC

1. Record the following data:

   - Fluke, Model 8060A Multimeter or equivalent

NQC No.: _____ Cal Due Date: _____

ELEC SV

2. Connect a frequency meter to the following terminal points in Cabinet 1-EI-CB-8A:

   - TB 47
   - TB48

ELEC

3. WHEN frequency meter is connected, THEN notify Unit 1 SRO.

ELEC SV

4. Remove the frequency meter connected to the following terminal points in Cabinet 1-EI-CB-8A:

   - TB 47
   - TB 48

ELEC

5. WHEN frequency meter is removed, THEN notify Unit 1 SRO.

Dominion
North Anna Power Station
JOB PERFORMANCE MEASURE EVALUATION

OPERATOR PROGRAM

INITIAL CONDITIONS

Annunciator 1C-B2, LOW PRESS LETDWN **LINE HI PRESS, has** just come in.

INITIATING CUE

You are to respond to this annunciator in accordance with 1-AR-C-B2

Dominion
North Anna Power Station
JOB PERFORMANCE MEASURE EVALUATION

OPERATOR PROGRAM

R642

TASK

Respond to a LOW PRESS LETDWN LINE HI PRESS annunciator

TASK STANDARDS

Excess letdown was placed in service after determining normal letdown could not be re-established.

K/A REFERENCE:

ALTERNATE PATH:

Yes

TASK COMPLETION TIMES

Validation Time = 24 mins.
Actual Time = _____ minutes

Start Time = _____ _____

Stop Time = _____

PERFORMANCE EVALUATION

Rating [ ] SATISFACTORY [ ] UNSATISFACTORY

Candidate (Print) _____

Evaluator (Print) _____

Evaluator's Signature/ Date _____

EVALUATOR'S COMMENTS

_____

_____

_____

Dominion
North Anna Power Station

JOB PERFORMANCE MEASURE
(Evaluation)

OPERATOR PROGRAM

READ THE APPLICABLE INSTRUCTIONS TO THE CANDIDATE

Instructions for Simulator JPMs

I will explain the initial conditions, and state the task to be performed. All control room steps shall be performed fer this JPM, including any required communications. I will provide initiating cues and reports on other actions when directed by you. Ensure you Indicate to me when you understand your assigned task. Bo indicate that you have cumpleted your assigned task return the handout sheet I provided you.

Instructions for In-Plant JPMs

I will explain the initial conditions, and state the task to be performed. All steps, including any required communications, shall be simulated for this JPM. Under no circumstances are you to operate any plant equipment. I will provide initiating cues and reports on other actions when directed by you. Ensure you indicate to me when you understand your assigned task. To indicate that you have completed your assigned task return the handout sheet I provided you.

INITIAL CONDITIONS

Annunciator 1C-B2, LOW PRESS LETDWN LINE HI PRESS, has just come in.

INITIATING CUE

You are to respond to this annunciator in accordance with 1-AR-C-B2

EVALUATION METHOD

Demonstration if conducted in the simulator or in a laboratory (use DEMONSTRATION cues)

Verbal-visual if conducted in the station or on a dead simulator (use VERBAL-VISUAL cues)

TOOLS AND EQUIPMENT

None

PERFORMANCE STEPS

STARTTIME _____

1	Call up 1-AR-C-B2 on the computerized Annunciator Response Program.	Procedure Step N/A

SAT [ ] UNSAT [ ]

Standards	1-AR-C-B2 is viewed on computer terminal or a copy of the 1-AR-C-B2 is printed.

Notes/Comments

2	1-CH-PCV-1145 placed in manual and attempt to open.	Procedure Step AR step 2.1

SAT [ ] **UNSAT** [ ]

Standards	**1-CH-PCV -1145 in manual and the up arrow is pressed.**

Dead Simulator Cues	The demand meter does not move.

Notes/Comments

3	Normal letdown is secured by closing 1-CH-1460 A or B and 1-CH-LCV-1200 A,B, and C.	Procedure Step AR 2.1 RNO

(Critical Step SAT [ ] UNSAT [ ]

Standards	**Letdown penetration is isolated by closing** 1-CH-LCV-1200B **and** 1-CH-**LCV-1460A and/or** 14608

Dead Simulator Cues	As the **operator locates and closes valves tell them green light** is **on and** red light is off.

Notes/Comments

4	Obtains copy of 1-OP-8.5 verifies initial conditions met. Precautions and limitations are reviewed.	Procedure Step 5.1.1/2

SAT [ ] UNSAT [ ]

Standards	Copy of procedure obtained and initial conditions met. Precautions and limitations reviewed.

Notes/Comments

Procedure Ste 5.2.3

SAT [ ] UNSAT [ ]

Standards	Operator ensures 1G-E2 not lit.
Bead Simulator Cues	Tell the operator 1G-E2 is not lit.

Notes/Comments

6	Ensure 1-CH-HCV-1137, Excess Letdown Pressure Control Valve is closed	Procedure Step 5.1.4

SAT [ ] UNSAT [ ]

Standards	Operator verifies demand is at zero.
Dead Simulator Cues	Tell the operator demand indicates zero or say as you see it.

Notes/Comments

7	**Operator** calls **backboards** to **close 1-EP-CB26B** Bkr # **22**	**Procedure Step 5.1.5**

SAT [ ] UNSAT [ ]

Standards	**Operator makes communication** to **get 1-EP-CB26B Bkr #22 to close.**
Dead Simulator Cues	Tell the operator backboards reports 1-EP-CB26B Bkr #22 is closed.

Notes/Comments

8	Selector switch for 1-CH-HCV-1389 EXCESS LETDOWN FLOW DIVERT in VCT or PDTT position.	Procedure Step 5.1.6

SAT [ ] UNSAT [ ]

Standards	Operator [illegible] in [illegible] or [illegible]
Demonstration Cues	Tell the operator unit supervisor desires excess letdown be directed to the VCT
Dead Simulator Cues	Tell the operator unit supervisor desires excess letdown be directed to the VCT

Notes/Comments

9	Close letdown orifice isolation valves 1-CH-HCV-1200A,B, and C. Close 1-CH-LCV-1460A/B	Procedure Step 5.1.7

Critical Step SAT [ ] UNSAT [ ]

Note to the evaluator: All of these valves could have been closed earlier using the guidance of the AR. The operator needs to close valves listed that were not previously closed.

Standards	Operator closes valves not previously closed using the guidance of the AR earlier.
Dead Simulator Cues	For valves 1-CH-HCV-1200A,B, and C, tell the operator green light on and red light off for each of those they close. For valves 1-CH-LCV-1460A/B, tell the operator green light on and red light off *for* each valve closed.

Notes/Comments

10	Place 1-CH-FCV-1122, NORMAL CHARGING FLOW CONTROL VALVE in MAN and close	Procedure Step 5.1.8

Critical Step	SAT [ ] UNSAT [ ]

Standards	Operator presses manual button on 1-CH-FCV-1122 and presses down arrow until demand is zero.
Dead Simulator Cues	Demand on 1-CH-FCV-1122 indicates zero.

Notes/Comments

11	Operator opens **ONLY ONE** of the following drain valves: 1-RC-HCV-1557A,B, or C.	Procedure Step 5.1.9

Critical Step	SAT [ ] UNSAT [ ]

Standards	Operator takes control switch to open for **ONLY ONE** one of the following valves 1-RC-1557A,B, or C.
Demonstration Cues	Unit **supervisor desires you** to **use** 1-RC-1557A.
Dead Simulator Cues	Unit supervisor desires you to use 1-RC-1557A. Tell the operator red light is on and green light is off for 1557A when switch is turned to open.

Notes/Comments

12	Operator opens 1-CH-1201, EXCESS LETDOWN HX ISOL VALVE.	Procedure Step 5.1.10

Critical Step	SAT [ ] UNSAT [ ]

Standards	Operator takes demand for 1-HCV-1201 to open.
Dead Simulator Cues	Red light is on and green light is off.

Notes/Comments

13	t opens 1-CH-HCV-1137	F rocedure Step 5.1.11

SAT [ ] UNSAT [ ]

Standards	**Operator takes demand for 1-HCV-1137 towards the open position.**
Dead Simulator Cues	Demand is increasing.

Notes/Comments

13	Operator maintains pressurizer level.	Procedure Step 5.1.12

SAT [ ] UNSAT [ ]

Standards	Operator opens 1-CH-1137 until pressurizer level stops increasing. The valve may be throttled depending on where the operator thinks that level is stable.

Demonstration Cues	Assume another operator will continue with the procedure.

for

Dead Simulator Cues	Red light is on and green light is off for 1-CH-1137 Pressurizer level is now stable. Assume another operator will continue with the procedure.

Notes/Comments

>>>>> END OF EVALUATION<<<<<

STOP TIME _____

SIMULATOR, LABORATORY, IN--PLANT SETUP
(If Required)

JOB PERFORMANCE MEASURE

TASK

CHECKLIST

LOW PRESS LETDWN LINE HI PRESS	>458 psig

1.0 Probable Cause

1.1 Failure of 1-CH-PC-1145.
1.2 Failure of 1-CH-PCV-1145.
1.3 Improper valve lineup.

2.0 Operator Action

ACTION/EXPECTED RESPONSE	RESPONSE NOT OBTAINED
2.1 PLACE 1-CK-PCV-1145 IN MANUAL AND CONTROL PRESSURE.	Secure letdown, THEN place excess letdown in service.
2.2 VERIFY LETDOWN LINE-UP CORRECT.	Align system per OP-1A's.

3.0 References

3.1 W system description
3.2 11715-FM-95E and C
3.3 W precautions limitations and setpoints
3.4 NAPS instrumentation CH-080
3.5 11715-ESK-10C
3.6 W Inst and cont. DWG 6008D18

4.0 Actuation

4.1 1-CH-PT-1145
4.2 1-CH-PC-1145A (C6-430)

VIRGINIA POWER	PROCEDURE NO: 1-OP-8.5	
NORTH ANNA POWER STATION	UNIT NO: 1	REVISION NO 14
PROCEDURE TYPE: OPERATING	EFFECTIVE DATE: ON FILE	EXPIRATION DATE: N/A

PROCEDURE TITLE:

OPERATION OF EXCESS LETDOWN

				EOP AP		

REVISION SUMMARY:

- Added Step 5.1.13 to log VCT Temperature, Seal Return Meat Exchanger Outlet Hdr Temperature, and Seal Water Heat Exch CC Outlet Hdr Flow.
- Added Step 5.1.14 and 5.1.15 to check limits if CC flow through the Seal Return Heat Exchanger is throttled and adjust CC flow as required using 1-OP-51.1, Component Cooling System.

Added Step 5.2.11 that IF desired to increase RCP Seal injection temperature, THEN throttle CC flow through the Seal Water Heat Exchanger using 1-OP-51.1, Component Cooling System.

Added new Reference 2.3.22 of 1-OP-51.1, Component Cooling System and Reference 2.3.23 for 1-FR-S.l.

Writer: B. Spencer	Reviewer: Eric Vestre

ELECTRONIC DISTRIBUTION — APPROVAL ON FILE

PRCBLEMSENCOUNTERED ☐ Yes ☐ No NOTE: If yes, note problems In Remarks

REMARKS:

(use back fer additional space)

SHIFT SUPERVISOR: DATE'

TABLE OF CONTENTS

Section	Page
1.0 PURPOSE	3
2.0 REFERENCES	3
3.0 INITIAL CONDITIONS	5
4.0 PRECAIJTIONS AND LIMITATIONS	5
5.0 INSTRUCTIONS	6
5.1 Shifting from Normal Letdown to Exsess Letdown	6
5.2 Shifting from Exsess Letdown to Normal Letdown	11

1.0 PURPOSE

1.1 To direct shifting from Normal Letdown to Excess Letdown.

1.2 To direct shifting from Excess Letdown to Normal Letdown.

2.0 REFERENCES

2.1 Source Documents

2.1.1 DCP 84-57-1, Containment Isolation Vaive Position Indication Modification, Unit 1, Procedure Book No. 1

2.1.2 UFSAR Ch 9.3.4

2.2 Technical Specifications

None

2.3 Technical References

2.3.1 11715-FM-93A, Reactor Coolant System—Sheet 1, 2 and 3

2.3.2 11715-FM-94A, Residual Heat Removal System, Sheets 1 and 2

2.3.3 11715-FM-95C, Chemical And Volume Control System, Sheets 1 and 2

2.3.4 1-ES-1.1, SI Termination

2.3.5 1-E-3, Steam Generator Tube Rupture

2.3.6 1-ECA-0.1, Loss of All AC Power Recovery Without SI Required

2.3.7 1-ECA-2.1, Uncontrolled Depressurization of All Steam Generators

2.3.8 1-FR-P.1, Response to Imminent Pressurized Thermal Shock Condition

2.3.9 1-FR-I.1, Response to High Pressurizer Level

2.3.10 1-FR-I.3, Response to Voids in Reactor Vessel

2.3.11 Westinghouse Startup Manual

2.3.12 NAPS PLS Document

2.3.13 1-ECA-3.3, SGTR Without Pressurizer Pressure Control

2.3.14 0-AP-48, Charging Pump Cross-Connect

2.3.15 1-AP-5, Unit 1 Radiation Monitoring System

2.3.16 1-AP-15, Loss of Component Cooling

2.3.17 1-AP-16, Increasing Primary Plant Leakage

2.3.18 1-AP-49, Loss of Normal Charging

2.3.19 Surry Power Station RCE 96-07

2.3.20 NRC IN 98-45, Cavitiation Erosion of Letdown Orifices

2.3.21 0-AP-10, Loss of Electrical Power

2.3.22 I-OP-51.1, Component Cooling System

2.3.23 1-FR-S.1, Response. to Nuclear Power Generation/ ATWS

2.4 **Commitment Documents**

2.4.1 DR N-98-0361 **Bypassing** Safety Injection Flow to Intact RCS Loops in Mode **1-4**

3.0 INITIAL CONDITIONS

Charging System is in operation.

4.0 PRECAUTIONS AND LIMITATIONS

4.1 Comply with the following guidelines when marking steps N/A:

- IF the conditional requirements **of** a step do not require the action to be performed, THEN mark the **step** N/A.
- IF any other step is marked N/A, THEN have the Shift Supervisor (or designee) approve the N/A and justify the N/A on the Procedure Cover Sheet.

4.2 IF Component Cooling **is lost,** THEN immediately stop primary flow through the Excess Letdown Heat Exchanger.

4.3 WHEN excess letdown flow **is** aligned to the PDTT instead of to the VCT, THEN inventory will be lost from the RCS/CVCS.

4.4 The design flow from the Excess LTDN HX is 7500 lbm/hr, sized to compensate for RCP **seal** injection **if** normal **letdown** is lost.

4.5 Only **one** loop drain valve may be open in Modes **1-4,** to prevent the possibility of bypassing **SI** flow to the two intact **loops** in a Design Basis Accident, due to loop cross-connect through the drain header. **(Reference 2.4.1)**

4.6 WHEN RCS pressure is greater than 300 psig, THEN Normal Letdown pressure should be at least 300 psig to prevent cavitation erosion of **the** letdown orifices. Operating with Letdown pressure less than 300 psig is acceptable for short durations. **(References 2.3.19 and 2.3.20)**

Init Verif

5.0 INSTRUCTIONS

5.1 Shifting from Normal Letdown to Excess Letdown

_____ 5.1.1 Verify Initial Condition is satisfied.

_____ 5.1.2 Review Precautions and Limitations.

_____ 5.1.3 Verify sufficient Component Cooling Water is supplied to Excess Letdown Heat Exchanger by observing that "G" Panel E-2, EXC LTDN HX CC OUT LO FLOW, is NOT LIT.

_____ 5.1.4 Close 1-CH-HCV-1137, EXCESS LETDOWN PRESSURE CONTROL VALVE.

_____ 5.1.5 Close 1-EP-CB-26B Bkr #22 to energize the following drain valves:

- 1-RC-HCV-1557A, A LOOP DRAIN HDR ISOL VALVE
- 1-RC-HCV-1557B, B LOOP DRAIN HDR ISOL VALVE
- 1-RC-HCV-1557C, C LOOP DRAIN HDR ISOL VALVE

* *

CAUTION: IF Excess Letdown to Primary Drain Transfer Tank is required, THEN the letdown flow rate must be restricted to maintain Excess Letdown Heat Exchanger outlet temperature at 195' F or less.

CAUTION: WHEN excess letdown flow is aligned **to** the PDTT instead of to the VCT, THEN inventory will be lost from the RCS/CVCS.

* *

5.1.6 Place selector switch for 1-CH-HCV-1389, EXCESS LETDOWN FLOW DIVERT, in one of the following positions:

______
- VCT
- PDTT

5.1.7 IF normal **letdown** is in service, THEN close the following valves:

a. **Close** the letdown orifices:

______ • 1-CH-HCV-1200A, A LETDOWN ORIFICE ISOL VALVE

______ • 1-CH-HCV-1200B, B LETDOWN ORIFICE ISOL VALVE

______ • 1-CH-HCV-1200C, C LETDOWN ORIFICE ISOL VALVE

b. Close the letdown isolation valves:

______ • 1-CH-LCV-1460A, LETDOWN ISOL VALVE

______ • 1-CH-LCV-1460B, LETDOWN ISOL VALVE

______ 5.1.8 Place 1-CH-FCV-1122, NORMAL CHARGING FLOW CONTROL VALVE, in MAN and **close.**

* *

CAUTION: Only one loop drain valve may be open in Modes 1-4, to prevent the possibility **of** bypassing SI flow to the **two intact loops** in a Design Basis Accident, due to loop cross-connect through the drain header. **(Reference 2.4.1)**

* *

5.1.9 Align the loop drains, as follows: **(Reference 2.4.1)**

a. IF in Modes 1-4, THEN **open ONLY** one **of the** following RCS Drain Valves. Mark valves not used N/A:

_____ • 1-RC-HCV-1557A, **A** LOOP DRAIN HDR ISOL VALVE

_____ • 1-RC-HCV-1557B, B LOOP DRAIN HDR **ISOI,** VALVE

_____ • 1-RC-HCV-1557C, C LOOP DRAIN HDR ISOL VALVE

b. IF in Mode 1-4, THEN verify the two RCS **Drain** Valves NOT opened in **Step** (a), are closed. Mark valve opened in Step (a) N/A:

_____ • 1-RC-HCV-1557A, **A** LOOP DRAIN HDR ISOL VALVE

_____ • 1-RC-HCV-1557B, B LOOP DRAIN HDR ISOL VALVE

_____ • 1-RC-HCV-1557C, C LOOP DRAIN HDR ISQL VALVE

c. IF in Modes 5, 6, or Defueled, THEN open at least ***one*** **of** the following RCS Drain Valves: Mark valves not used N/A:

_____ • 1-RC-HCV-1557A, **A** LOOP DRAIN HDR ISOL VALVE

_____ • 1-RC-HCV-1557B, B LOOP DRAIN HDR ISOL VALVE

• 1-RC-HCV-1557C, C LOOP DRAIN HDR ISOL VALVE

_____ 5.1.10 Open 1-CH-HCV-1201, EXCESS LETDOWN HX ISOL VALVE.

* *

CAUTION: The Excess Letdown pressure as indicated on 1-CH-PI-1138 must NOT exceed 130 psig.

CAUTION: VCT pressure as indicated on 1-CH-PI-1117 must NOT exceed 75 psig.

* *

______ 5.1.11 SLOWLY open 1-CH-HCV-1137, EXCESS LETDOWN PRESSURE CONTROL VALVE, to heat up system and avoid thermal shack.

* *

CAUTION: RCP Seal Injection Flow Must be maintained between 7 and 10 gpm to each RCP that is running.

* *

______ 5.1.12 Maintain Pressurizer level using the following valves:

- 1-CH-HCV-1137, EXCESS LETDOWN PRESSURE CONTROL VALVE
- 1-CH-FCV-1122, NORMAL CHARGING FLOW CONTROL VALVE
- 1-CH-HCV-1186, RCP'S SEAL WATER FLOW CONTROL

5.1.13 Log the following:

______
- VCT Temperature (Control Room)
  1-CH-TI-1116 ____________________

______
- Sed Return Heat Exchanger Outlet Hdr Temperature (local)
  1-CH-TI-1136 ____________________

______
- Seal Water Heat Exch CC Outlet Hdr Flow (local)
  1-CC-FI-102 ____________________

5.1.14 IF CC flow through the Seal Return Heat Exchanger is throttled to increase seal injection temperarure, THEN ensure that the following limits are not exceeded:

_____ • AT between Seal Return Heat Exchanger Outlet and the Volume Control Tank less than 5 °F

_____ • CC flow greater than or equal to 75 gpm.

_____ • CC flow less than or equal to 210 gpm.

_____ • VCT temperature less than 115 "F.

_____ 5.1.15 IF desired to increase CC flow through the Sed Return Heat Exchanger, THEN adjust flow as required using 1-QP-51.1, Component Cooling System.

Completed _____ Date: _____

5.2 Shifting from Exsess Letdown to Normal Letdown

______ 5.2.1 Review Precautions and Limitations.

______ 5.2.2 Ensure 1-CH-TV-1204A, LETDOWN ISOL VALVE, is open.

______ 5.2.3 Ensure 1-CH-TV-1204B, LETDOWN ISOL VALVE, is open.

5.2.4 Ensure the following valves are open:

______ • 1-CH-LCV-1460A, LETDOWN ISOL VALVE

______ • 1-CH-LCV-1460B, LETDOWN ISOL VALVE

* *

CAUTION: IF excess letdown was diverted to the PDTT, THEN VCT boron concentration may not be the same as RCS boron concentration. When returning to normal letdown, boration or dilution may be required to maintain desired RCS temperature and reactor power level.

* *

______ 5.2.5 Using I-CH-FCV-1122, NORMAL CHARGING FLOW CONTROL VALVE, establish a charging flow of 25 to 30 gpm.

______ 5.2.6 Ensure I-CH-PCV-1145, LETDOWN PRESSURE CONTROL VALVE, is in MAN, then raise output to 100%.

NOTE: When Letdown temperature decreases, the Mixed Bed IX will absorb boron. When Letdown temperature increases, the Mixed Bed IX will release boron. Therefore, Letdown temperature should be held constant by adjustment of the TCV or manual valve.

5.2.7 Open the required Letdown Orifice Isolation Valve(s).

_____ • 1-CH-HCV-1200A, A LETDOWN ORIFICE ISOL VALVE

_____ • 1-CH-HCV-1200B, B LETDOWN ORIFICE ISOL VALVE

_____ • 1-CH-HCV-1200C, C LETDOWN ORIFICE ISOL VALVE

_____ 5.2.8 Establish letdown pressure at approx. 300 psig using I-CII-PCV-1145, LETDOWN PRESSURE CONTROL VALVE, then place in AUTO. **(References 2.3.19 and 2.3.20)**

5.2.9 Secure Excess Letdown as follows:

_____ a. Close 1-CH-HCV-1137, EXCESS LETDOWN PRESSURE CONTROL VALVE.

_____ b. Close 1-CH-HCV-1201, EXCESS LETDOWN HX ISOL VALVE.

c. Close the following Reactor Coolant System Drain Valves:

_____ • 1-RC-HCV-1557A, A LOOP DRAIN HDR ISOL VALVE

_____ • 1-RC-HCV-1557B, B LOOP DRAIN HDR ISOL VALVE

_____ • 1-RC-HCV-1557C, C LOOP DRAIN RDR ISOI, VALVE

_____ d. Place selector switch 1-CH-HCV-1389, EXCESS LETDOWN DIVERT VALVE, in VCT.

____ e. Establish normal pressurizer level using I-CH-FCV-1122, NORMAL CHARGING FLOW CONTROL VALVE, then place in AUTO.

_____ SV

5.2.10 Open 1-EP-CB-26B Bkr #22 to de-energize the following Reactor Coolant System Rain Valves:

- 1-RC-HCV-1557A, A LOOP DRAIN HDR ISOL VALVE
- 1-RC-HCV-1557B, B LOOP DRAIN HDR ISOL VALVE
- 1-RC-HCV-1557C, C LOOP DRAW HDR ISOL VALVE

5.2.11 IF desired to increase RCP Seal injection temperature, THEN throttle CC flow through the Seal Water Heat Exchanger using 1-OP-51.1, Component Cooling System.

Completed: _____ Date: _____

Dominion
North Anna Power Station
JOB PERFORMANCE MEASURE EVALUATION

OPERATOR PROGRAM

INITIAL CONDITIONS

Unit 1 turbine has been tripped

Unit 1 is operating at 10% power

INITIATING CUE

You are requested to transfer the steam dumps to the steam-pressure mode in accordance with 1-AP-2.1

Dominion
North Anna Power Station
JOB PERFORMANCE MEASURE EVALUATION

OPERATOR PROGRAM

R664

TASK

Transfer the steam dumps to the steam-pressure mode following a turbine trip without a reactor trip (1-AP-2.1).

TASK STANDARDS

Steam dumps were transferred to steam-pressure mode IAW 1-AP-2.1 (bump-less transfer)

WA REFERENCE:

041-A4.04 (2.7/2.7)

ALTERNATE BATH:

N/A

TASK COMPLETION TIMES

Validation Time = 8 minutes Start Time = _____
Actual Time = _____ minutes Stop Time = _____

PERFORMANCE EVALUATION

Rating [ ] SATISFACTORY [ ] UNSATISFACTORY

Candidate (Print) _____

Evaluator (Print) _____

Evaluator's Signature / Date _____

EVALUATOR'S COMMENTS

_____

_____

_____

Dominion
North Anna Power Station

JOB PERFORMANCE MEASURE
(Evaluation)

OPERATOR PROGRAM

R664

READ THE APPLICABLE INSTRUCTIONS TO THE CANDIDATE

Instructions for Simulator JPMs

I will explain the initial conditions, and state the task to be performed. All control room steps shall be performed for this JPM, including any required communications. I will provide initiating cues and reports on other actions when directed by you. Ensure you indicate to me when you understand your assigned task. To indicate that you have completed your assigned task return the handout sheet I provided you.

Instructions for In-Plant JPMs

I will explain the initial conditions. and state the task to be performed. All steps, including any required communications, shall be simulated for this JPM. Under no circumstances are you to operate any plant equipment. I will provide initiating cues and reports on other actions when directed by you. Ensure you indicate to me when you understand your assigned task. To indicate that you have completed your assigned task return the handout sheet I provided you.

INITIAL CONDITIONS

Unit 1 turbine has been tripped

Unit1 is operating at 10% power

INITIATING CUE

You are requested to transfer the steam dumps to the steam-pressure mode in accordance with 1-AP-2.1.

EVALUATION METHOD

Demonstration if conducted in the simulator or in a laboratory (use DEMONSTRATION cues)

Verbal-visual if conducted in the station or on a dead simulator (use VERBAL-VISUAL cues)

TOOLS AND EQUIPMENT

Nons

PERFORMANCE STEPS

START TIME _____

1	Place the steam dump controller in the MANUAL position	Procedure Step 18A
		SAT [ ] UNSAT [ ]
	Standards	Manual pushbutton on controller is pressed.
	Notes/Comments	

2	Adjust steam dump controller's output indicator to match the steam dump demand as indicated on TI-1408.	Procedure Step 18B

Critical Step	SAT [ ] UNSAT [ ]

Standards	Steam dump controller's output indication is within ± 5% of the steam dump demand indicated on TI-1408

Notes/Comments

3	Place the steam dump mode selector switch in the STEAM PRESSURE position.	Procedure Step 18C

(Critical Step	**(SAT[ ]**UNSAT [ ]

Standards	Steam dump mode selector switch is placed in the STEAM PRESSURE position

Notes/Comments

4	Manually control steam flow using the steam dump controller.	Procedure Step 18D

SAT [ ] UNSAT [ ]

Dead Simulator Cues	Steam flow is responding to the steam dump controller adjustments

Notes/Comments

>>>>> END OF EVALUATION <<<<<

STOP TIME _____

SIMULATOR, LABORATORY, IN--PLANT SETUP
(If Required)

SIMULATOR SETUP

JOB PERFORMANCE MEASURE
R664

TASK

Transfer the steam dumps to the steam-pressure mode following a turbine trip without a reactor trip (1-AP-2.1)

CHECKLIST

_____ Recall the IC # for 15% power

_____ Enter malfunction MTU01, time delay = 0

_____ Place simulator in RUN

Perform steps of 1-AP-2.1 up to transferring the steam dumps to the steam pressure mode

_____ Place the sirnulator in FREEZE

NUMBER	PROCEDURE TITLE	REVISION
1-AP-2.1	TURBINE TRIP WITHOUT REACTOR TRIP REQUIRED (WITH ONE ATTACHMENT)	9
		PAGE 1 of 8

PURPOSE

To provide the necessary instructions to control the plant following a Turbine trip without a Reactor trip required.

ENTRY CONDITIONS

This procedure is entered when Reactor Power is less than 30% and any of the following conditions exist:

- Any Turbine Trip First Out Annunciator is LIT. or
- 4/4 Turbine Stop Valves closed, or
- 2/3 Auto Stop Oil low pressure. or
- Transition from another plant procedure.

RECOMMENDED APPROVAL:	DATE	EFFECTIVE DATE
RECOMMENDED APPROVAL - ON FILE		
APPROVAL:	DATE	
APPROVAL - ON FILE		

STEP	ACTION/EXPECTED RESPONSE	RESPONSE NOT OBTAINED

* *

CAUTION: Reactor power reductions may cause SG levels to decrease resulting in a Reactor trip.

* *

NOTE: If at any time during the performance of this procedure a Reactor trip occurs. then 1-E 0. REACTOR TRIP OR SAFETY INJECTION. should be performed.

STEP	ACTION/EXPECTED RESPONSE	RESPONSE NOT OBTAINED
1.___	MANUALLY TRIP TURBINE:	
	a) Simultaneously push both Turbine Trip pushbuttons	
	b) Verify all Turbine Stop Valves - CLOSED	b) Put both EHC Pumps in PTL.
	c) Verify Generator Output Breaker - OPEN	c) IF Generator Output Breaker does NOT open within 30 seconds. THEN manually open 6-12 and the Exciter Field Breaker.
• 2.___	VERIFY AT LEAST ONE MAIN FEED PUMP RUNNING	GO TO 1-E-0, REACTOR TRIP OR SAFETY INJECTION.
* 3.___	VERIFY STEAM DUMPS AVAILABLE:	GO TO 1-E-0. REACTOR TRIP OR SAFETY INJECTION.
	• Annunciator Panel "A" G 1, CNDSR LO VAC C 9 PERM NOT AVAIL, is NOT LIT	

STEP	ACTION/EXPECTED RESPONSE	RESPONSE NOT OBTAINED
4. __	VERIFY MAIN FEED FLOW **TO** ALL SGs - INDICATED	Do the following to restore Main Feedwater to affected SGs: a) Manually close Main Feed Reg Bypass Valves. b) Push both FW Bypass Valve Reset pushbuttons. c) Use Main Feed Reg Bypass Valves to restore flow. d) IF Main Feedwater cannot be restored, THEN GO TO 1-E-0. REACTOR TRIP OR SAFETY INJECTION.
5. __	CONTROL FEED PLOW TO MAINTAIN SG NARROW RANGE LEVELS BETWEEN 23% AND 50%	
6. __	CHECK RCS AVERAGE TEMPERATURE STABLE	Do the following: a) Place Rod Control Selector switch in MANUAL. b) Position Rods as required to control RCS average temperature. c) Verify proper operation of Steam Dumps.
7. __	CHECK PRZR LEVEL - UNDER CONTROL OF OPERATOR	Control charging and letdown to maintain level on program. IF level cannot be maintained. THEN GO TO 1-E-0. REACTOR TRIP OR SAFETY INJECTION.

STEP	ACTION/EXPECTED RESPONSE	RESPONSE NOT OBTAINED
8. ___	CHECK PRZR PRESSURE - STABLE AT OR TRENDING TO 2235 PSIG	IF pressure decreasing in an uncantrolled manner. THEN initiate 1-AP-44. LOSS OF REACTOR COOLANT SYSTEM PRESSURE. IF pressure greater than 2235 psig AND increasing, THEN: a) Verify PRZR Heaters off. IF NOT. THEN manually turn off Heaters. b) Control pressure using normal PRZR spray.
9. ___	CHECK REACTOR POWER:	
	a) Verify Reactor Power - LESS THAN 15%	a Start reducing power to less than 15% using Control Rods and Steam Dumps. WHEN Power is less than 15%, THEN continue with Step 9b.
	b) Place Control Rod Mode Selector switch in MANUAL	
	c) Verify Reactor Power - STABILIZED LESS THAN 12%	c) Reduce and stabilize power less than 12% using Control Rods and Steam Dumps.

NOTE: Pump operations are defined an ıited by the Load Shed System in accordance with 0-OP-26.7. LOAD SHED.

10. ___	VERIFY ONLY ONE MAIN FEED PUMP - RUNNING	Stop all but one Main Feed Pump using 1-OP-31.1. MAIN FEEDWATER SYSTEM.

STEP	ACTION/EXPECTED RESPONSE	RESPONSE NOT OBTAINED
11.__	TRANSFER FEEDWATER CONTROL TO MAIN FEED REG BYPASS VALVES:	
	a) Verify Main Feed Reg Bypass Valve controllers in AUTO	a) Do either of the following: • Place controllers in AUTO. OR • Manually control Main Feed Bypass Valves.
	b) Verify Main Feed Reg Valves CLOSED	b) Do the following: 1) Place controllers in MANUAL. 2) Slowly close Kain Feed Reg Valves.
12.__	VERIFY AFW PUMPS - NOT RUNNING: • I-FW-P-2 • 1-FW-P-3A • 1-FW P-38	Stop AFW Pumps and place in AUTO.
13.__	VERIFY ALL TURBINE DRAIN VALVES OPEN: • 1-SD-MOV 100A • 1-SD-MOV-100B • 1-SD MOV-100C • 1-SD-MOV 100D • 1-SD-MOV 101 • I-SD-MOV 102A • 1-SD MOV-102B • 1 SD-MOV 102C • 1 SD-MOV 102D	Manually open valves.
14.__	DETERMINE: IF AUXILIARY STEAM SHOULD BE TRANSFERRED FROM UNIT 1	GO TO Step 16.

STEP	ACTION/EXPECTED RESPONSE	RESPONSE NOT OBTAINED
15. —	TRANSFER AUXILIARY STEAM TO ONE OF THE FOLLOWING: • Unit 2 Main Steam OR • Unit 2 Second Point Extraction OR • Auxiliary Boilers	
16. —	DETERMINE IF REHEATER STEAM SYSTEM SHOULD BE REMOVED FROM SERVICE	GO TO Step 18.
17. —	REMOVE REHEATER STEAM SYSTEM FROM SERVICE AS FOLLOWS: a) Slowly decrease the Manual Valve Positioner knob to ZERO b) Push the Reset button c) Verify the following valves CLOSED: • 1-MS-FCV-104A • 1-MS-FCV-104R • 1 MS FCV-104C • 1 MS FCV-104D d) Start aligning Moisture Separator Reheaters for startup using 1-OP-28.3. OPERATION OF THE MOISTURE SEPARATOR REHEATERS	c) Locally close valves.

STEP	ACTION/EXPECTED RESPONSE	RESPONSE NOT OBTAINED

* *

CAUTION: Changing modes of operation of Steam Dumps may cause an undesired reduction in steam flow.

* *

18. — TRANSFER CONDENSER STEAM DUMPS TO STEM PRESSURE MODE:

a) Put Steam Dump controller to MANUAL

b) Match Steam Dump controller setpoint to demand indicated on TI-1408

c) Put Mode Selector switch to STEAM PRESS

d) Manually control steam flow using Steam Dump controller

19.__ INITIATE 0-OP-26.7. LOAD SHED

20.__ DETERMINE IF CHEMISTRY MUST BE NOTIFIED:

ACTION/EXPECTED RESPONSE	RESPONSE NOT OBTAINED
a) Check Reactor power - DECREASED MORE THAN 15% IN 1 HOUR	a) GO TO Step 21.
b) Notify Chemistry to do an Isotopic Analyis of the RCS within the next 6 hours	

21.__ DETERMINE CAUSE OF TURBINE TRIP

STEP	ACTION/EXPECTED RESPONSE	RESPONSE NOT OBTAINED
22.	VERIFY NOTIFICATIONS: • Operations Manager On Call NOTIFIED • STA - NOTIFIED	Make required notifications.
23.	ESTABLISH DESIRED PLANT CONDITIONS:	
	a) Reactor shutdown - DESIRED	a) Do the following: 1) Stabilize Unit at desired power level. 2) GO TO 1-OP-2.1, UNIT STARTUP FROM MODE 2 TO MODE 1.
	b) Reduce Reactor power to less than 5% using Control Rods and Steam Dumps.	
	c) Select the highest reading Power and Intermediate Range Channels on NR-45	
	d) GO TO 1-OP-3.1. UNIT SHUTDOWN FROM MODE 2 TO MODE 3	

END

- LER N2/90-010, Reactor Trip from 9% Power Due to Loss of Normal Feedwater
- DCP 88-03-1, TURBINE TRIP - REACTOR TRIP. Setpoint Change to P-8
- 1 AP 44, LOSS REACTOR COOLANT SYSTEM PRESSURE
- 1-OP 2.1. UNIT STARTUP FROM MODE 2 MODE 1
- 1-OP-3.1. UNIT SHUTDOWN FROM MODE 2 TO MODE 3
- Θ OP 26.7. LOAD SHIED
- 1-OP-28.3. OPERATION OF THE MOISTURE SEPARATOR REHEATERS
- 1-OP-31.1. MAIN FEEDWATER SYSTEM

The following EOPs are referenced in this procedure:

- 1-E-0, REACTOR TRIP OR SAFETY INJECTION

Dominion
North Anna Power Station
JOB PERFORMANCE MEASURE EVALUATION

OPERATOR PROGRAM

INITIAL CONDITIONS

The emergency condensate storage tank **is** intact, but normal makeup is unavailable

Both service water headers are in service with one pump running on each header.

The QATC **has** reset **SI** and **AMSAC,** and stopped AFW pumps.

INITIATING CUE

You are requested to align service water to supply suction to the unit-2 auxiliary feedwater pumps in accordance with **2-AP-22.5.** Assume you already have an admin key and pipe wrench.

Dominion
North Anna Power Station
JOB PERFORMANCE MEASURE EVALUATION

OPERATOR PROGRAM

N1528

TASK

Align service water to the auxiliary feedwater pump suction (2-AP-22.5).

TASK STANDARDS

Service water is aligned to the auxiliary feedwater pump suction and the pumps have been vented.

Work was performed in compliance with the Radiation Work Permit; exposure to surface and airborne contamination was minimized; and ALARA principles were applied.

WA REFERENCE:

054-AA1.01 (4.5/4.4)

ALTERNATE PATH:

N/A

TASK COMPLETION TIMES

Validation Time = 33 minutes Start Time = _____
Actual Time = _____ minutes **Stop** Time = _____

PERFORMANCE EVALUATION

Rating [ ] SATISFACTORY [ ] UNSATISFACTORY

Candidate (Print) _____

Evaluator (Print) _____

Evaluator's Signature / Date _____

EVALUATOR'S COMMENTS

_____

_____

_____

Dominion
North Anna Power Station

JOB PERFORMANCE MEASURE
(Evaluation)

OPERATOR PROGRAM

N1528

READ THE APPLICABLE INSTRUCTIONS TO THE CANDIDATE

Instructions for Simulator JPMs

I will explain the initial conditions, and state the task to be performed. All control room steps shall be performed for this JPM, including any required communications. I wiil provide initiating cues and reports on other actions when directed by you. Ensure you indicate to me when you understand your assigned task. To indicate that you have completed your assigned task return the handout sheet I provided you.

Instructions for In-Plant JPMs

I will explain the initial conditions, and state the task to be performed. All steps, including any required communications, shall be simulated for this JPM. Under no circumstances are you to operate any plant equipment. I will provide initiating cues and reports on other actions when directed by you. Ensure you indicate to me when you understand your assigned task. To indicate that you have completed your assigned task return the handout sheet I provided you.

INITIAL CONDITIONS

The emergency condensate storage tank is intact, but normal makeup is unavailable

Both service water headers are in service with one pump running on each header

The OATC has reset SI and **AMSAC,** and stopped AFW pumps

INITIATING CUE

You are requested to align service water to supply suction to the unit-2 auxiliary feedwater pumps in accordance with 2-AP-22.5. Assume you already have an admin key and pipe wrench.

EVALUATION METHOD

Demonstration if conducted in the simulator or in a laboratory (use DEMONSTRATION cues)

Verbal-visual if conducted in the station or on a dead simulator (use VERBAL-VISUAL cues)

TOOLS AND EQUIPMENT

Administrative key

Pipe wrench

PERFORMANCE STEPS

START TIME _____

1	Complete attachment to align AFW pumps to alternate suction header.	Procedure Step Attachment 3

Standards	Operator continues with attachment

Notes/Comments

2	Unlock and close turbine-driven auxiliary feedwater pump normal suction valve.	Procedure Step attachment 3 step 1a

Critical Step	SAT [ ] UNSAT [ ]

Standards	2-FW-145 is unlocked and closed
Verbal-Visual Cues	2-FW-145 stem is fully inserted and the valve stops turning.

Notes/Comments

3	Unlock and close 3A motor-driven auxiliary feedwater pump normal suction valve.	Procedure Step attachment 3 step 1b

Standards	2-FW-162 is unlocked and closed
Verbal-Visual Cues	2-FW-162 stem is fully inserted and the valve stops turning.

Notes/Comments

4	Unlock and close 3B motor-driven auxiliary feedwater pump normal suction valve.	Procedure Step attachment 3 step 1c

Critical step	SAT [ ] UNSAT [ ]

Standards	2-FW-180 is unlocked and closed
Verbal-Visual Cues	2FW-180 stem is fully inserted and the valve stops turning.

Notes/Comments

5	Close fire main supply header tell-tale drain valve.	Procedure Step attachment 3 step 1d

Critical Step	SAT [ ] UNSAT [ ]

Standards	2-FW-176 is closed. This valve is under grating.
Verbal-Visual Cues	2-FW-176 handwheel stops turning and the stem is inserted

Notes/Comments

6	Close service water supply header tell-tale drain valve.	Procedure Step attachment 3 step 1e

Critical step	SAT [ ] UNSAT [ ]

Standards	2-FW-203 is closed. This valve is under the grating.
Verbal-Visual Cues	2-FW-203 stops turning.

Notes/Comments

7	Open turbine-driven auxiliary feedwater pump alternate header suction valve.	Procedure Step attachment 3 step 1f

Standards	2-FW-147 is opened
Verbal-Visual Cues	2-FW-147 stem is fully extended and the valve stops turning.

Notes/Comments

8	Open 3A motor-driven auxiliary feedwater pump alternate header suction valve.	Procedure Step attachment 3 step 1g

Critical step	SAT [ ] UNSAT [ ]

Standards	2-FW-164 is opened
Verbal-Visual Cues	2-FW-164 stem is fully extended and the valve stops turning.

Notes/Comments

9	Open 3B motor-driven auxiliary feedwater pump alternate header suction valve.	Procedure Step attachment 3 step 1h

[CriticalStep	SAT [ ] UNSAT [ ]

Standards	2-FW-182 is opened
Verbal-Visual Cues	2-FW-182 stem is fully extended and the valve stops turning.

Notes/Comments

10	Unlock and open AFW pumps recirc header to ECST isolation valve.	Procedure Step Attachment 3 step 1i

Critical Step	SAT [ ] UNSAT [ ]

Standards	2-FW-625 is unlocked and opened
Verbal-Visual Cues	2-FW-625 stem is fully up as indicated by anti-rotation device.

Notes/Comments

11	Open turbine-driven AFW pump recirc header isolation valve to four turns open.	Procedure Step attachment 3 step 1j1

Critical Step	SAT [ ] UNSAT [ ]

Standards	2-FW-623 is opened four turns
Verbal-Visual Cues	Tell the operator the valve handwheel has turned counter clockwise 4 full rotations.

Notes/Comments

12	Open 3A motor-driven AFW pump recirc header isolation valve to four turns open.	Procedure Step attachment 3step 1j2

[CriticalStep	SAT [] **UNSAT [ ]**

Standards	2-FW-626 is opened four turns
Verbal-Visual Cues	Tell the operator the valve handwheel has turned counter clockwise 4 full rotations.

Notes/Comments

13	Open 3B motor-driven AFW pump recirc header isolation valve to four turns open.	Procedure Step Attach 3 step 1j3

Critical Step	SAT [ ] UNSAT [ ]

Standards	2-FW-628 **is opened** four turns
Verbal-Visual Cues	Tell the operator the valve handwheel has turned counter clockwise 4 full rotations.

Notes/Comments

14	Notify the control room that the alignment has been completed and request further instructions.	Procedure Step attachment 3 step 2

SAT [ ] UNSAT [ ]

Standards	Control room is informed that attachment is complete
Verbal-Visual Cues	Control room directs you to continue with the procedure

Notes/Comments

15	Determine if fire protection should be used to supply AFW suction.	Procedure Step procedure step 6

SAT [ ] UNSAT [ ]

Standards	Operator proceeds to RNO go to step 11

Notes/Comments

16	Ensure "B" SW header available.	Procedure Step 11A

SAT [ ] UNSAT [ ]

Standards	"5" service water header is verified available

Notes/Comments

17	Ensure AFW pump emergency suction isolation is open.	Procedure Step 11b

SAT [ ] UNSAT [ ]

Standards	2-SW-71 is opened
Verbal-Visual Cues	2-SW-71 stem is fully extended

Notes/Comments

48	Manually open one of the "B" service water header *to* RSHX inlet isolations.	Procedure Step 11c

Critical Step	SAT [ ] UNSAT [ ]

Standards	Control room operator is requested to open 2-SW-MOV 201D
Verbal Cues	Control room operator has opened 2-SW-MOV-201C or 201D as determined by trainee.

Notes/Comments

19	Locally unlock and open **2-FW-202,** service water to AFW pumps isolation valve.	Procedure Step 11d

[Critical Step	**SAT [ ] UNSAT [ ]**

Verbal-Visual Cues	2-FW-202 **stem** is fully extended and the valve stops turning.

Notes/Comments

20	Vent the turbine-driven auxiliary feedwater pump.	Procedure Step 12

Critical Step	SAT [ ] UNSAT [ ]

Standards	Pipe caps are removed from 2-FW-P-2 casing vents.
	Casing vent valves 2-FW-250 and 1-FW-614 are opened.
	Casing vent valves 2-FW-250 and 1-FW-614 are closed.
Verbal-Visual Cues	(Read cue AFTER vent valves are opened): A solid stream of water is n flowing from the casing vents

Notes/Comments

21	Vent the 3A motor-driven auxiliary feedwater pump.	Procedure Step 12

Critical Step	SAT [ ] UNSAT [ ]

Standards	Pipe caps are removed from 2-FW-P-3A casing vents.
	Casing vent valves 2-FW-252 and 1-FW-615 are opened
	Casing vent valves 2-FW-252 and 1-FW-615 are closed
Verbal-Visual cues	(Read cue AFTER vent valves are opened): A solid stream of water is now flowing from the casing vents.

Notes/Comments

22	Vent the 3B motor-driven auxiliary feedwater pump.	Procedure Step 12

Critical Step	SAT [ ] UNSAT [ ]

Standards	Pipe caps are removed from 2-FW-P-3B casing vents.
	Casing vent valves 2-FW-254 and 1-FW-616 are opened
	Casing vent valves 2-FW-254 and 1-FW-616 are closed

Verbal-Visual Cues	(Read cue AFTER vent valves are opened): A solid stream of water is now flowing from the casing vents.

Notes/Comments

23	Start the required auxiliary feedwater pumps.	Procedure Step 13

SAT [ ] UNSAT [ ]

Standards	Control room operator is informed that the AFW pumps are ready to be started

Verbal-Visual Cues	Control room acknowledges the AFW pumps are ready to be started. Assume that another operator will complete the procedure

Notes/Comments

>>>>> END OF EVALUATION<<<<<

STOP TIME _____

SIMULATOR, LABORATORY, IN--PLANT SETUP
(If Required)

SIMULATOR SETUP

JOB PERFORMANCE MEASURE
N1528

TASK

Align service water to the auxiliary feedwater pump suction (2-AP-22.5).

CHECKLIST

_____ Sign-off a copy of 2-AP-22.5 through stopping AFW pumps

VIRGINIA POWER
NORTH ANNA POWER STATION
ABNORMAL PROCEDURE

NUMBER	PROCEDURE TITLE	REVISION
2-AP-22.5	LOSS OF EMERGENCY CONDENSATE STORAGE TANK 2-CN-TK-I (WITH THREE ATTACHMENTS)	7 PAGE 1 of 11

PURPOSE

To provide instructions to feed the Steam Generators when the normal suction supply to the AFW Pumps is not available.

ENTRY CONDITIONS

This procedure is entered when any of the following conditions exist:

- ECST level is less than 40%. or
- Annunciator Panel "F" E-8. AFW SUPPLY 20 MIN WATER REMAINING, is LIT. or
- AFW Pump suction pressure is 4 psig or less.

RECOMMENDED APPROVAL:	DATE	EFFECTIVE DATE
RECOMMENDED APPROVAL - ON FILE		
APPROVAL:	DATE	
APPROVAL - ON FILE		

STEP	ACTION/EXPECTED RESPONSE	RESPONSE NOT OBTAINED
1.	CHECK STATUS OF ECST: • ECST - INTACT • Normal makeup supply to ECST AVAILABLE	GO TO Step 4.
2.	MAKE UP TO ECST USING **2-OP-31.2.** STEAM GENERATOR AUXILIARY FEEDWATER SYSTEM	
3.	RETURN **TO** PROCEDURE AND STEP IN EFFECT	
4.	STOP AFW PUMPS: a) Reset both trains of SI b) Reset AKSAC c) Place Motor-Driven APW Bumps in PTL: • 2-FW-P-3A • 2 FW P-3B d) Manually close Steam Supply Valves to Turbine-Driven AFW Pump (Terry Turbine): • 2 MS-TV-211A • 2-MS-TV-211B	
	NOTE: The APW lineup drawings **of** Attachment **3** should be retained in the Control Room to provide Control Room personnel with a graphical representation of the AFW lineup.	
5.	DO ATTACHMENT 3 TO ALIGN AFW PUMPS TO ALTERNATE SUCTION HEADER	

STEP	ACTION/EXPECTED RESPONSE	RESPONSE NOT OBTAINED

NOTE:
- Because of the chemistry of the Service Water Reservoir, the Fire Main water from the lake is the preferred source of alternate makeup water.
- Because of the poor quality of the alternate makeup sources, adequate time should be scheduled to allow cleanup of the Steam Generators after the alternate source is no longer needed. The Chemistry Department should be contacted for guidance.
- 1-FP-P-2. Diesel-Driven Fire Pump. takes suction on the Service Water Reservoir.

6. __	DETERMINE IF FIRE PROTECTION SYSTEM SHOULD BE USED TO SUPPLY AFW PUMP SUCTION	GO TO Step 11
7. __	START 1-FP-P-1, MOTOR-DRIVEN FIRE PUMP	Do the following: a) Locally start either of the Warehouse 5 Fire Pumps: • 1-FP-P-10. Diesel-Driven Warehouse 5 Fire Pump OR • 1-FP-P-11. Motor Driven Warehouse 5 Fire Pump b) Open 1-FP-246, Southeast Protected Area Fire Prot Loop Isol Valve (Cross-tie with Warehouse 5 Fire Pumps. Post Indicator Valve located in the SE comer of the yard) IF Warehouse 5 Fire Pumps are not available, THEN start 1-FP-P-2. Diesel-Driven Fire Pump.
8. __	LOCALLY OPEN 1-FP-84, UNIT 2 AUX FEED WTR PUMPS FIRE WTR MAKEUP ISOL VV (POST INDICATOR VALVE)	

STEP	ACTION/EXPECTED RESPONSE	RESPONSE NOT OBTAINED
9.___	LOCALLY UNLOCK AND OPEN 2-FW-175. FIREMAIN SUPPLY HEADER TO APW PUMPS ISOLATION VALVE (LOCATED UNDER 2-IA-TK-4G)	
10.___	GO TO STEP 12	

STEP	ACTION/EXPECTED RESPONSE	RESPONSE NOT OBTAINED
11.	ALIGN SERVICE WATER TO SUPPLY AFW PUMP SUCTION AS FOLLOWS:	
	a) Ensure "B" SW header available - AT LEAST ONE SW PUMP SUPPLYING "B" HEADER	a) IF "A" SW header is available. THEN align SW flow from "A" SW header as follows (valves located in QSPH Basement): 1) Close 2-SW-71. Aux Feed Pump Emergency Suct Header SW Isol Valve 2) Open 2-SW-69. Aux Feed Pump Emergency Suct Header SW Isol Valve 3) Manually open one of the "A" SW header RSHX Inlet Isolation Valves: • 2-SW-MOV-201A OR • 2-SW-MOV-201B 4) Locally unlock and open 2-FW-202. Service Water to AEW Pumps Isolation Valve (located under 2-FW-FT-200A) 5) GO TO Step 12.
	b) Ensure 2-SW-71. Aux Feed Pump Emergency Suct Header SW Isol Valve is open (located in QSPH Basement)	
	c) Manually open one of the following RSHX Inlet Isolation Valves: • 2-SW-MOV-201C OR • 2-SW-MOV-201D	
	d) Locally unlock and open 2-FW-202. Service Water to AFW Pumps Isolation Valve (located under 2-FW-FT-200A)	

STEP	ACTION/EXPECTED RESPONSE	RESPONSE NOT OBTAINED

NOTE: A pipe wrench is needed to remove pipe caps.

12. — LOCALLY VENT AFW PUMPS USING THE FOLLOWING VENT VALVES UNTIL A SOLID STREAM OF WATER FLOWS:

- 2-FW-250 and 2 PW-614 for 2-FW P 2
- 2-FW-252 and 2-FW-615 for 2-FW-P-3A
- 2-FW 254 and 2-FW-616 €or 2-FW-P-3B

* *

CAUTION: When flow to "A" SG is being reduced. 2-FW-MOV-200D should bc slowly throttled to prevent relief valve 2-FW-RV-200 from lifting.

* *

13. __ START REQUIRED AFW PUMPS:

a) Start Turbine Driven AFW Pump:

1) Open 2-FW-MOV-200D, TURBINE DRIVEN AFW PUMP TO A SG

2) Start Turbine Driven AFW Pump by placing Steam Supply Valves to open:

- 2-PIS TV 211A
- 2 MS-TV-211B

b) Start Motor-Driven AFW Pumps:

- 2-FW-P-3A
- 2-FW-P 3B

STEP	ACTION/EXPECTED RESPONSE	RESPONSE NOT OBTAINED
14.__	LOCALLY THROTTLE THE AFW PUMP RECIRC HDR INLET ISOLATION VALVES TO ACHIEVE THE DESIRED FLOW TO SGs WHILE LIMITING AFK PUMP DISCHARGE PRESSURE TO LESS THAN 1400 PSIG • 2-FW-623 for 2-FW-P-2 • 2 FW 626 for 2-FW-P-3A ■ 2-FW-628 for 2-FK-P-3B	
15. —	CONTROL AFW FLOW TO MAINTAIN SG LEVELS BETWEEN 23% AND 50% USING: • 2-FW-MOV-200D for "A" SG • 2-FW-MOV-200B for "B" SG • 2-FW-HCV-200C for "C" SG	
16. —	DETERMINE IF ALTERNATE SUPPLY TO AFW PUMPS CAN BE SECURED: • Normal makeup available to ECST OR ■ AFW System no longer required	WHEN alternate supply to AFW Pumps can be secured. THEN GO TO Step 17.
17.__	RAISE SG NARROW RANGE LEVELS TO 45% TO 50%	

STEP	ACTION/EXPECTED RESPONSE	RESPONSE NOT OBTAINED
18.__	STOP AFW PUMPS: a) Reset both trains of SI b) Reset AMSAC c) Place Motor Driven AFW Pumps in PTL: • 2-FW-P-3A • 2-FW-P 3B d) Manually close Steam Supply Valves to Turbine-Driven AFW Pump (Terry Turbine): • 2 MS-TV-211A • 2 MS-TV-211B e) Close AFW valves: • 2-FW-MOV 200D • 2-FW MOV-200B • 2 FW-HCV-200C	
19.__	VERIFY THE FOLLOWING RSHX INLET ISOLATION VALVES · REMAINED CLOSED: • 2 SW-MOV-201A • 2-SW MOV-201B • 2-sw MOV-201C ■ 2-SW-MOV-201D	Do the following: a) Manually close valves. b) Drain RSHX SW Header using 2-PT-62.2.1. RSHX SW INLEAKAGE.
20.__	VERIFY ECST LEVEL · GREATER THAN 40%	Make up to the ECST using 2 OP 31.2. STEAM GENERATOR AUXILIARY FEEDWATER SYSTEM.

STEP	ACTION/EXPECTED RESPONSE	RESPONSE NOT OBTAINED
	NOTE: The AFW lineup drawing of Attachment 2 should be retained in the Control Room to provide Cantrol Room personnel with a graphical representation of the AFW lineup.	
21. __	DO ATTACIIMENT 2 TO ALIGN AFW PUMPS TO NORMAL SUCTION HEADER	
22. __	DETERMINE IF AFW FLOW - REQUIRED	IF it is desired to place the AFW Pumps in Auto-Standby, THEN GO TO Step 26. IF it is desired to maintain the AFW System secured, THEN GO TO Step 27.
23. __	START REQUIRED AFW PUMPS: • 2-FW-P-2 • 2-FW-P-3A • 2-FW P 3B	
24. __	CONTROL AFW FLOW TO MAINTAIN SG LEVELS BETWEEN 23% AND 50% USING: • 2-FW-MOV-200D for "A" SG • 2 FW-MOV-200B fur "B" SG • 2-FW-HCV-200C fur "C" SG	
25. —	DETERMINE IF AFW FLOW - NO LONGER REQUIRED	Maintain SG levels between 23% and 50% using AFW. WHEN AFW flow is no longer required. THEN GO TO Step 26

STEP	ACTION/EXPECTED RESPONSE	RESPONSE NOT OBTAINED

26.__ RETURN AFW PUMPS TO AUTO STANDBY:

a) Place Motor-Driven AFW Pump control switches to AUTO:

- 2 FW P-3A
- 2-FW-P-3B

bf Place Steam Supply Valves for Turbine-Driven AFW Pump (Terry Turbine) in AUTO:

- 2-MS-TV-211A
- 2-MS-TV 211B

c) Open AFW valves:

- 2-FW MOV-200D
- 2 FW MOV-200B
- 2-FW-HCV-ZOOC

STEP	ACTION/EXPECTED RESPONSE	RESPONSE NOT OBTAINED

NOTE: If the AFW System is not in Auto-Standby. then some annunciators may be lit.

27.—	VERIFY THE FOLLOWING ANNUNCIATORS NOT LIT: • Panel "F" A-8. AFW PUMP DISCH FW-MOV-200B/D NOT FULL OPEN • Panel "F" B-8, AFW PUMP BISCH FW-MOV-200A/C NOT FULL CLOSED • Panel "F" C-5, AUX FD PP 3A-3B AUTO TRIP • Panel "F" C-6. AFW PUMP DISCH FW-HCV-2006 MOT FULL OPEN • Panel "F" C-7. AFW PUMP DISCH FW-HCV-200A/B NOT FULL CLOSED • Panel "F" C-8, AFW PUMP DISCH FW-PCV-259A/B NOT FULL OPEN • Panel "F" D-5. AUX FD PP LOCAL CONTROL • Panel "F" D-6, TURBINE DRIVEN AFW PUMP TRAIN A NON-AUTO CONT • Panel "F" D-7. TURBINE DRIVEN AFW PUMP TRAIN B NON-AUTO CONT • Panel "F" D-8. TURBINE DRIVEN AFW PUMP TROUBLE OR LUBE OIL TRBL	Refer to the applicable annunciator response procedure.
28.__	DO APPLICABLE PORTIONS OF 2-OP-31.2A, VALVE CHECKOFF AUXILIARY FEEDWATER	
29.—	RETURN TO PROCEDURE IN EFFECT	

END

- UFSAR
- 12050-FM-74A
- 11715-FB-101A
- Safety System Functional Inspection on Auxiliary Feedwater System at North Anna Power Station. May 20. 1987
- Response to IEB 88-04. Potential Safety Related Pump **Loss** (10-C-1)
- CTS 02-89-1365-007
- CTS 02-94-2229 073. Revise procedures to reflect 2-SW-69 normally closed
- 2-OP-31.2. STEAM GENERATOR AUXILIARY FEEDWATER SYSTEM
- DR N-93-1078, Potential to Overpressurize AFW Pump Discharge Piping
- DCP 92-004 2. Annunciator Windows Engraving and Relocation
- The following EOPs reference this procedure:

  2 E-0. REACTOR TRIP OR SAFETY INJECTION
  2-ES-0.0. RE-DIAGNOSIS
  2-ES 0.1. REACTOR TRIP RESPONSE
  2-ES-0.2A, NATURAL CIRCULATION COOLDOWN WITH CRDM FANS
  2-ES-0.2B, NATURAL CIRCULATION COOLDOWN WITHOUT CRDM PANS
  2 ES 0.3. NATURAL CIRCULATION COOLDOWN WITH STEAM VOID IN VESSEL (WITH RVLIS)
  2-ES 0.4, NATURAL CIRCULATION COOLDOWN WITH STEAM VOID IN VESSEL (WITHOUT RVLIS)
  2-E-1, LOSS OF REACTOR OR SECONDARY COOLANT
  2-ES-1.1, SI TERMINATION
  2-ES 1.2. POST-LOCA COOLDOWN AND DEPRESSURIZATION
  2-E-2. FAULTED STEAM GENERATOR ISOLATION
  2-E-3. STEAM GENERATOR TUBE RUPTURE
  2 ES-3.1. POST-SGTR COOLDOWN USING BACKFILL
  2-ES-3.2. POST-SGTR COOLDOWN USING BLOWDOWN
  2-ES-3.3. POST-SGTR COOLDOWN USING STEAM DUMP
  2-ECA-0.0, LOSS OF ALL AC POWER
  2-ECA-0.1. LOSS OF ALL AC POWER RECOVERY WITHOUT SI REQUIRED
  2-ECA-0.2. LOSS OF ALL AC POWER RECOVERY WITH SI REQUIRED
  2 ECA-2.1. UNCONTROLLED DEPRESSURIZATION OF ALL STEAM GENERATOKS
  2-ECA-3.1. SGTR WITH LOSS OF REACTOR COOLANT SUBCOOLED RECOVERY DESIRED
  2 ECA 3.2. SGTR WITH LOSS OF REACTOR COOLANT - SATURATED RECOVERY DESIRED
  2 ECA-3.3. SGTR WITHOUT PRESSURIZER PRESSURE CONTROL
  2-FR-C.l. RESPONSE TO INADEQUATE CORE COOLING
  2-FR-C.2. RESPONSE TO DEGRADED CORE COOLING
  2 FR-H.1, RESPONSE TO LOSS OF SECONDARY HEAT SINK

1. Locally stop any Fire Pump running to supply firemain to AFW Pump suction that is not needed for any other purpose.

   ___ • 1-FP-P-1. Motor-Driven Fire Pump

   ___ • 1-FP-P-2, Diesel-Driven Fire Pump

   ___ • I-FP-P-10. Diesel-Driven Warehouse 5 Fire Pump

   ___ • 1-FP-P-11. Motor-Driven Warehouse 5 Fire Pump

2. ___ IF opened to supply AFW Pump suction. THEN close 1-FP-246. Southeast Protected Area Fire Prot Loop Isol Valve (Cross-tie with Warehouse 5 Fire Pumps. Post Indicator Valve located in the SE corner of the yard).

NOTE: Some of the AFW System valves have admin locks.

3. Locally perform the following valve lineup (located in the Motor-Driven AFW Pumphouse):

   ___ a) Close 2-FW-147. Turbine Driven AFW Pump Firemain Suct Isol Valve.

   ___ b) Close 2-FW-164. Firemain to 3A Mtr Drvn AFW Pump Suct Isol Valve.

   ___ c) Close 2-FW-182. Firemain to 3B Mtr Drvn APW Pump Suct Isol Valve.

   ___ d) Close and lock 2 FW-625, AFW Pumps Recirc Hdr To ECST Inlet Isol Valve.

   ___ e) Close 2-FW-623. Turbine Driven AFW Bump Recirc Hdr Isol Valve.

   ___ f) Close 2-PW-626. 3A Motor Driven AFW Pump Recirc Hdr Isol Valve.

   ___ g) Close 2-FW-628. 3B Motor Driven AFW Pump Recirc Hdr Isol Valve.

   ___ h) Open and. lock 2-FW-145. Turbine Driven AFW Pump Suction Isolation Valve.

   ___ i) Open and lock 2-FW-162, 3A Motor Driven AFW Pump Suction Isolation Valve.

(STEP 3 CONTINUED ON NEXT PAGE)

3. Locally perform the following valve lineup (located in the Motor-Driven APW Pumphouse)(Continued):

   ___ j) Open and lock 2-FW-180. 3B Motor Driven AFW Pump Suction Isolation Valve.

   ___ k) Close 1-FP-84. Unit 2 Aux Feed Wtr Pumps Fire Wtr Makeup Isol Vv (Post Indicator Valve located outside of the Motor-Driven AFW Pumphouse).

   ___ l) Close and lock 2-FW-202. Service Water to AFW Pumps Isolation Valve (located under 2-FW-FT-200A).

   ___ m) Open 2-FW-176. Firemain Supply Header to AFW Pumps Drain Valve (located underneath the grating and below 2-IA-TK-4H).

   ___ n) Open 2 FW 203. Service Water Header Tell Tale Isolation Valve (located underneath the grating and below 2-FW-FT-200A).

   ___ o) Close and lock 2-FW-175. Firemain Supply Header to AFW Pumps Isolation Valve (located under 2-IA-TK-4G).

4. ___ Notify the Control Room that Attachment 2 is complete and to return to 2-AP-22.5. step in effect.

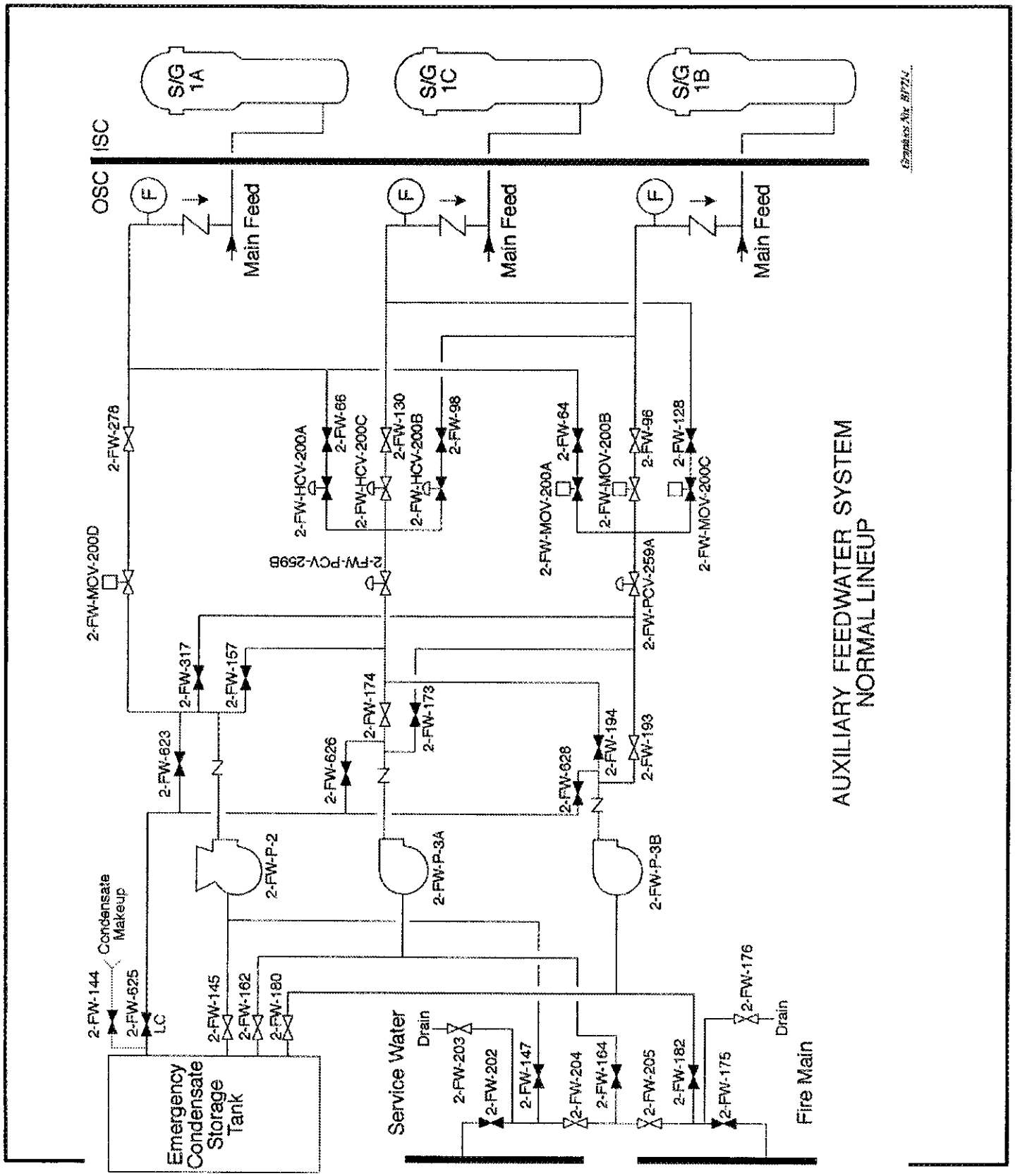
AUXILIARY FEEDWATER SYSTEM
NORMAL LINEUP
S/G 1A
S/G 1C
S/G 1B
ISC
OSC
Main Feed
Main Feed
Main Feed
2-FW-278
2-FW-MOV-200D
2-FW-HCV-200A
2-FW-66
2-FW-HCV-200C
2-FW-130
2-FW-HCV-200B
2-FW-98
2-FW-PCV-259B
2-FW-MOV-200A
2-FW-64
2-FW-MOV-200B
2-FW-96
2-FW-PCV-259A
2-FW-128
2-FW-MOV-200C
2-FW-317
2-FW-157
2-FW-623
2-FW-174
2-FW-173
2-FW-626
2-FW-194
2-FW-193
2-FW-628
2-FW-P-2
2-FW-P-3A
2-FW-P-3B
Condensate Makeup
2-FW-144
2-FW-525
LC
2-FW-145
2-FW-162
2-FW-180
Emergency Condensate Storage Tank
Service Water
Drain
2-FW-203
2-FW-202
2-FW-147
2-FW-204
2-FW-164
2-FW-205
2-FW-182
2-FW-175
2-FW-176
Drain
Fire Main

NOTE:
- A complete copy of this AP should be taken for reference when locally operating valves directed by the body of this AP.
- Some of the AFW System valves have admin locks.
- A pipe wrench is needed to remove pipe caps of the vent valves operated by Step 12 of this AP.

1. Locally perform the following valve lineup (located in the Hotor-Driven AFW Pumphouse):

___ a) Unlock and close 2 FW-145, Turbine Driven AFW Pump Suction Isolation Valve.

___ b) Unlock and close 2-FW-162, 3A Motor Driven AFW Pump Suction Isolation Valve.

___ c) Unlock and close 2-FW-180. 3B Motor Driven AFW Pump Suction Isolation Valve.

___ d) Close 2-FW-176. Firemain Supply Header to AFW Pumps Drain Valve (located underneath the grating and below 2-IA-TK-4H).

___ e) Close 2-FW-203. Service Water Header Tell Tale Isolation Valve (located underneath the grating and below 2-FW-FT-200A).

___ f) Open 2-FW-147. Turbine Driven AFW Pump Firemain Suct Isol Valve.

___ g) Open 2-FW 164, Firemain to 3A Mtr Drvn AFW Pump Suct Isol Valve.

___ h) Open 2 FW-182, Firemain to 3B Mtr Drvn AFW Pump Suct Isol Valve.

___ i) Unlock and open 2-FW-625, AFW Pumps Recirc Hdr to ECST Inlet Isol Valve.

j) Unlock and open the following valves to 4 turns open:

___ 1) 2 FW-623. Turbine Driven AFW Pump Recirc Hdr Isol Valve.

___ 2) 2-FW-626. 3A Motor Driven AFW Pump Recirc Hdr Isol Valve.

___ 3) 2-FW 628. 3B Motor Driven AFW Pump Recirc Hdr Isol Valve.

2. ___ Notify the Control Room that Attachment 3 is complete and to return to 2-AP 22.5. step in effect. Request further instructions.

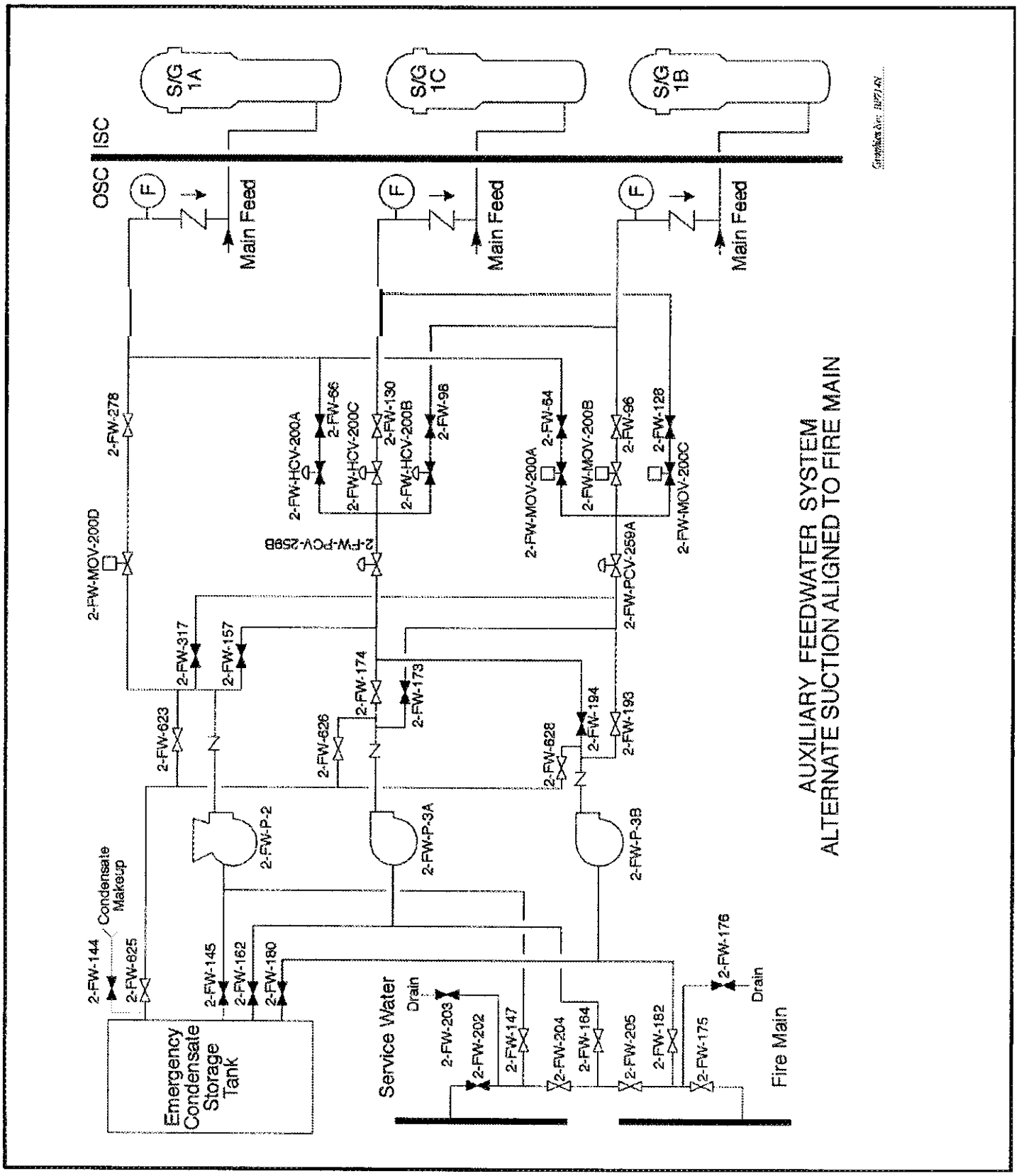
S/G 1A
S/G 1C
S/G 1B
ISC
OSC
Main Feed
Main Feed
Main Feed
2-FW-278
2-FW-MOV-200D
2-FW-HCV-200A
2-FW-66
2-FW-HCV-200C
2-FW-130
2-FW-HCV-200B
2-FW-98
2-FW-64
2-FW-MOV-200A
2-FW-MOV-200B
2-FW-96
2-FW-128
2-FW-MOV-200C
2-FW-PCV-259B
2-FW-PCV-259A
2-FW-317
2-FW-157
2-FW-174
2-FW-173
2-FW-623
2-FW-626
2-FW-628
2-FW-194
2-FW-193
2-FW-P-2
2-FW-P-3A
2-FW-P-3B
Condensate Makeup
2-FW-144
2-FW-825
2-FW-145
2-FW-162
2-FW-180
Emergency Condensate Storage Tank
Service Water
Drain
2-FW-203
2-FW-202
2-FW-147
2-FW-204
2-FW-164
2-FW-205
2-FW-182
2-FW-175
2-FW-176
Drain
Fire Main
AUXILIARY FEEDWATER SYSTEM
ALTERNATE SUCTION ALIGNED TO FIRE MAIN

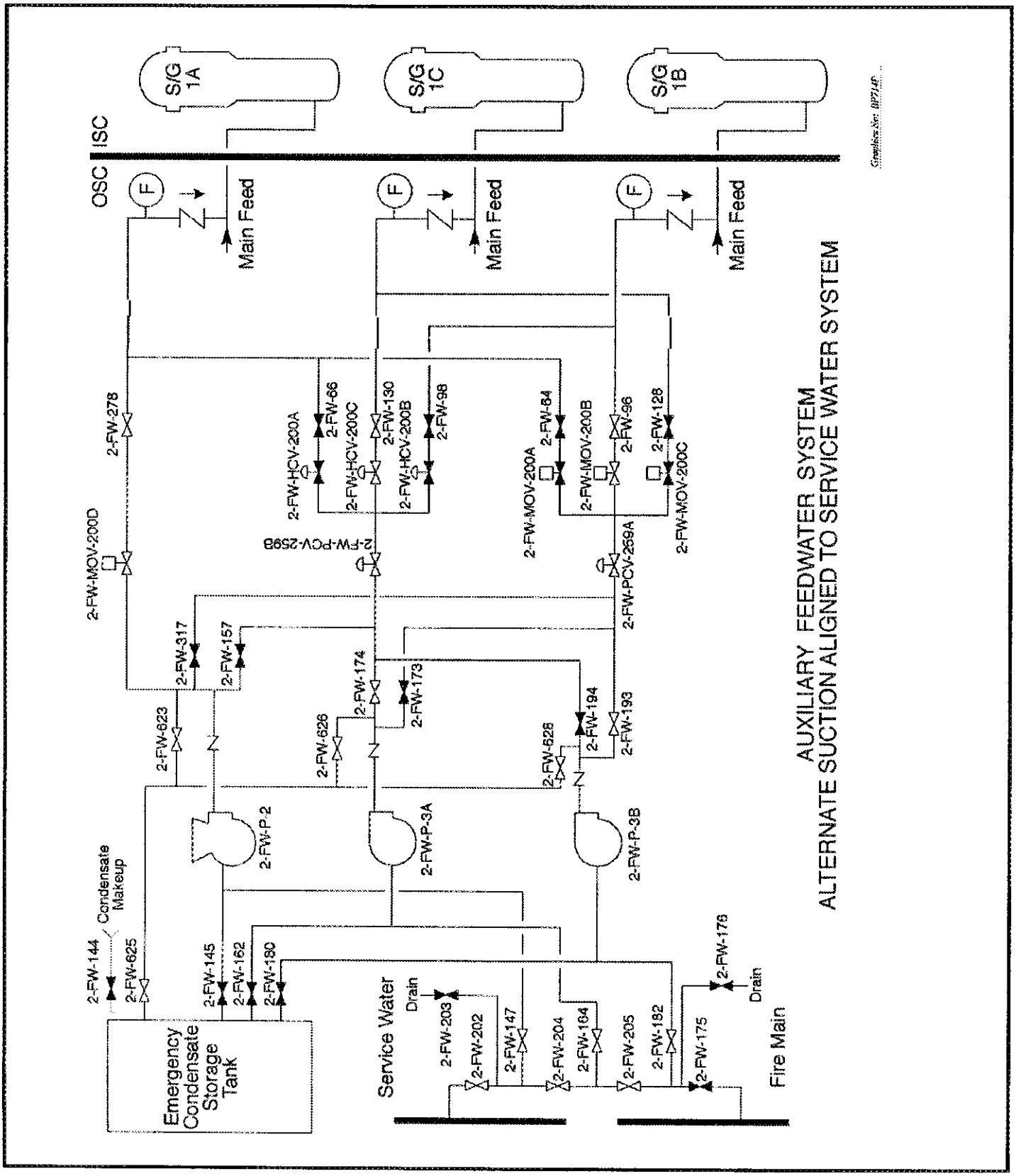
S/G 1A
S/G 1C
S/G 1B
ISC
OSC
Main Feed
Main Feed
Main Feed
2-FW-278
2-FW-MOV-200D
2-FW-HCV-200A
2-FW-66
2-FW-HCV-200C
2-FW-130
2-FW-HCV-200B
2-FW-98
2-FW-64
2-FW-MOV-200A
2-FW-MOV-200B
2-FW-96
2-FW-128
2-FW-MOV-200C
2-FW-PCV-259B
2-FW-PCV-259A
2-FW-317
2-FW-157
2-FW-623
2-FW-626
2-FW-174
2-FW-173
2-FW-628
2-FW-194
2-FW-193
2-FW-P-2
2-FW-P-3A
2-FW-P-3B
Condensate Makeup
2-FW-144
2-FW-625
2-FW-145
2-FW-162
2-FW-180
Emergency Condensate Storage Tank
Service Water
Drain
2-FW-203
2-FW-202
2-FW-147
2-FW-204
2-FW-164
2-FW-205
2-FW-182
2-FW-175
2-FW-176
Drain
Fire Main
AUXILIARY FEEDWATER SYSTEM
ALTERNATE SUCTION ALIGNED TO SERVICE WATER SYSTEM

Dominion
North Anna Power Station
JOB PERFORMANCE MEASURE EVALUATION

OPERATOR PROGRAM

INITIAL CONDITIONS

Component Cooling Water Systems are cress-tied

Only unit-1 CC system is intact and available

INITIATING CUE

You have been requested to perform the attachment of 1-AP-15 to split out the CC system between units 1 and 2.

Dominion
North Anna Power Station
JOB PERFORMANCE MEASURE EVALUATION

OPERATOR PROGRAM

N877

TASK

Split out the unit-I and unit-2 Component Cooling Water Systems (I-AP-15, 1-OP-51.1).

TASK STANDARDS

Component Cooling Water System has been split out between Unit 1 and Unit 2.

WA REFERENCE:

026-AA2.03 (2.6/2.9)

ALTERNATE PATH:

N/A

TASK COMPLETION TIMES

Validation Time =28 mins. Start Time = _____

Actual Time = _____ minutes Stop Time = _____

PERFORMANCE EVALUATION

Rating [ ] SATISFACTORY [ ] UNSATISFACTORY

Candidate (Print) _____

Evaluator (Print) _____

Evaluator's Signature / Date _____ _____

EVALUATOR'S COMMENTS

_____

_____

_____

Dominion
North Anna Power Station

JOB PERFORMANCE MEASURE
(Evaiuation)

OPERATOR PROGRAM

N877

READ THE APPLICABLE INSTRUCTIONS TO THE CANMDATE

Instructions for Simulator JPMs

I will explain the initial conditions, and state the task to be performed. All control room steps shall be performed for this JPM, including any required communications. I will provide initiating cues and reports on other actions when directed by you. Ensure you indicate to me when you understand your assigned task. To indicate that you have completed your assigned task return the handout sheet I provided you.

Instructions for In-Plant JPMs

I will explain the initial conditions, and state the task to be performed. All steps, including any required communications, shall be simulated for this JPM. Under no circumstances are you to operate any plant equipment. I will provide initiating cues and reports on other actions when directed by you. Ensure you indicate to me when you understand your assigned task. To indicate that you have completed your assigned task return the handout sheet I provided you.

INITIAL CONDITIONS

Component Cooling Water Systems are cross-tied

Only unit-1 CC system is intact and available

INITIATING CUE

You have been requested to perform the attachment of 1-AP-15 to split out the CC system between units 1 and 2.

EVALUATION METHOD

Demonstration if conducted in the simulator or in a laboratory (use DEMONSTRATION cues)

Verbal-visual if conducted in the station or on a dead simulator (use VERBAL-VISUAL cues)

TOOLS AND EQUIPMENT

Ladder

PERFORMANCE STEPS

START TIME _____

1	Close the suction header cross-connect between unit-I and unit-2 CC pumps.	Procedure Step 1

Critical Step	SAT [ ] UNSAT [ ]

Standards	1-CC-40 closed.
Verbal-Visual Cues	i-CC-40 stem indicator rotates 90 degrees and points to closed.

Notes/Comments

2	Close the discharge header cross-connect between unit-1 and unit-2 CC pumps.	Procedure Step 2

Critical Step	SAT [ ] UNSAT [ ]

Standards	1-CC-49 is closed
Verbal-Visual Cues	1-CC-49 stem has rotated clockwise and brought the ends together. This is a butterfly valve.

Notes/Comments

3	Close the CC cross-connect between unit-1 and unit-2 CC heat exchangers.	Procedure Step 3

SAT [ ] UNSAT [ ]

Standards	1-CC-57 is closed or verified closed. This is a chain operated valve.
Verbal-Visual Cues	1-CC-57 stem indicator points to closed. Chain will not move.

Notes/Comments

4	Ensure common loads return to unit-1 CC pumps is open.	Procedure Step 4A1

SAT [ ] UNSAT [ ]

Standards	1-CC-15 is verified open. This is a chain operated valve.
Verbal-Visual Cues	Stem is fully extended. The chain does not turn.

Notes/Comments

5	Ensure the unit-1 CC supply header isolation is open.	Procedure Step 4A2

SAT [ ] UNSAT [ ]

Standards	1-CC-59 is verified open
Verbal-Visual Cues	Stem is fully extended. The valve does not turn.

Notes/Comments

6	Close the unit-:! CC supply header isolation.	Procedure Step 4A3
	Critical step	SAT [ ] UNSAT [ ]
	Standards	2-CC-36 is closed. This is a chain operated valve.
	Verbal-Visual Cues	Stern is inserted and the valve stops turning.
	Notes/Comments	

7	Close the common load return to the unit-2 CC pumps.	Procedure Step 4A4
	Critical Step	SAT [ ] UNSAT [ ]
	Standards	1-CC-14 is closed. This is a chain operated valve.
	Verbal-Visual Cues	Stem is inserted and the valve stops turning.
	Notes/Comments	

8	Notify the control room that the attachment is complete.	Procedure Step 5

SAT [ ] UNSAT [ ]

Standards	Control room is notified that CC is split out
Verbal-Visual Cues	The control room acknowledges that the CC system has been split cut between unit 1 and unit 2

Notes/Comments

>>>>> END OF EVALUATION <<<<<

STOP TIME _____

SIMULATOR, LABORATORY, IN–PLANT SETUP
(If **Required)**

NOTE: A ladder is required to operate 1-CC-40, Suction Header Cross-Connect Isolation Valve Between 1-CC-P-1B and 2-CC-P-1A.

1. __Close 1-CC-40. Unit 1 to Unit 2 CC Pumps Suct Hdr Xconn Isol Vv. (Overhead. near 1-CC-P-1B motor)

2. __Close 1-CC-43. Unit 1 to Unit 2 CC Pumps Disch Hdr Xconn Isol Vv. (Over 1-CC-P-1B suction piping)

3. __Close 1-CC-57, Unit 1 to Unit 2 CC Heat Exchangers Xconn Isol Vv. (In overhead north of 2-CC-E-1A)

4. Align CC Common Loads to intact unit:

   a) IF Unit 1 intact and available. THEN do the following:

   __ 1) Ensure 1-CC-15, Common CC Load Return to Unit 1 CC Pumps Isol Vv, OPEN. (Chain operated valve at 1-CC-P-1A)

   2) Ensure 1-CC-59, Component Cooling Supply Header Isolation Valve. OPEN. (2nd floor. north of 1-CC-E-1A)

   __ 3) Close 2-CC-36. Component Cooling Supply Header Isolation Valve. (2nd floor. north of 2-CC-E-1B)

   __ 4) Close 1-CC-14. Common CC Load Return to Unit 2 CC Pumps Isol Vv. (Chain operated valve at 2-CC-P-1B)

   b) IF Unit 2 intact and available, THEN do the following:

   __ 1) Ensure 1-CC-14. Common CC Load Return to Unit 2 CC Pumps Isol Vv, OPEN. (Chain operated valve at 2-CC-P-1B)

   __ 2) Ensure 2-CC-36, Component Cooling Supply Header Isolation Valve. OPEN. (2nd floor. north of 2-CC-E-1B)

   __ 3) Close 1-CC-59, Component Cooling Supply Header Isolation Valve. (2nd floor. north of 1-CC-E-1A)

   __ 4) Close 1-CC-15, Common CC Load Return to Unit 1 CC Pumps Isol Vv. (Chain operated valve at 1-CC-P-1A)

5. — Notify the Control Room that this attachment is complete.

- END -

Dominion
North Anna Power Station
JOB PERFORMANCE MEASURE EVALUATION

OPERATOR PROGRAM

INITIAL CONDITIONS

AC power has been lost

1-ECA-0.0 has been entered due to a loss of all AC power

INITIATING CUE

You are requested to isolate reactor coolant pump seals locally in accordance with I-ECA-0.0, Attachment **3.**

Dominion
North Anna Power Station
JOB PERFORMANCE MEASURE EVALUATION

OPERATOR PROGRAM

N10

TASK

Isolate the reactor coolant pump seals locally (I-ECA-0.0, 1-ECA-0.2, 1-AP-33.2).

TASK STANDARDS

Seal Injection, Seal Return, and Component Cooling return from the thermal barrier heat exchanger, **have** been isolated

Work was performed in compliance with the Radiation Work Permit; exposure to surface and airborne contamination **was** minimized; and ALARA principles were applied

K/A REFERENCE:

003A201 (3,5.3.9)

ALTERNATE PATH:

N/A

TASK COMPLETION TIMES

Validation Time = 30 minutes Start Time = _____
Actual Time = _____ minutes Stop Time = _____

PERFORMANCE EVALUATION

Rating [ ] SATISFACTORY [ ] UNSATISFACTORY

Candidate (Print) _____

Evaluator (Print) _____

Evaluator's Signature / Date _____

EVALUATOR'S COMMENTS

_____

_____

_____

Dominion
North Anna Power Station

JOB PERFORMANCE MEASURE
(Evaluation)

OPERATOR PROGRAM

N10

READ THE APPLICABLE INSTRUCTIONS TO THE CANDIDATE

Instructions for Simulator JPMs

I will explain the initial conditions, and state the task to be performed. All control room steps shall be performed for this JPM, including any required communications. I will provide initiating cues and reports on other actions when directed by you. Ensure you indicate to me when you understand your assigned task. To indicate that you have completed your assigned task return the handout sheet I provided you.

Instructions for In-Plant JPMs

I will explain the initial conditions, and state the task to be performed. All steps, including any required communications. shall be simulated for this JPM. Under no circumstances are you to operate any plant equipment. I will provide initiating cues and reports on other actions when directed by you. Ensure you indicate to me when you understand your assigned task. To indicate that you have completed your assigned task return the handout sheet I provided you.

INITIAL CONDITIONS

AC power has been lost

1-ECA-0.0 has been entered due to a loss of all AC power

INITIATING **CUE**

You are requested to isolate reactor coolant pump seals locally in accordance with 1-ECA-0.0, Attachment 3.

EVALUATION METHOD

Demonstration if conducted in the simulator or in a laboratory (use DEMONSTRATION cues)

Verbal-visual if conducted in the station or on a dead simulator (use VERBAL-VISUAL cues)

TOOLS AND EQUIPMENT

Administrative key

PERFORMANCE STEPS

START TIME _____

1	Unlock and close the reactor coolant pump seal injection throttle valves.	Procedure Step Attach 3 step1

Critical Step	SAT [ ] UNSAT [ ]

Note to Evaluator	Seal injection supply throttle valves have a red cover installed over the valve handwheel. The operator will have to unlock red cover and remove it. They will then need to back off a lock nut with a wrench that is staged next to the valve. The valve's have T-handles that will need to be turned clock-wise to close.

Standards	Seal injection supply throttle valves 1-CH-318, 1-CH-314, and 1-CH-310 are unlocked and closed

Verbal-Visual Cues	As each valve is closed tell the operator the handwheel stops turning and the stem is inserted.

Notes/Comments

2	Close the reactor coolant pump thermal barrier component cooling water return valve.	Procedure Step Attachment 3 step 2

Critical step	SAT [ ] UNSAT [ ]

Verbal-Visual Cues	Tell the operator the handwheel stops turning and the stem is inserted.

Standards	RCP thermal barrier return valve 1-CC-757 is closed

Notes/Comments

3	Close the reactor coolant pump seal water return isolation motor-operated valve.	Procedure Step Attachment 3 step 3

Critical Step	SAT [ ] UNSAT [ ]

Standards	RCP seal leak-off valve 1-CH-MOV-1381 is closed

Verbal-Visual Cues	1-CH-MOV-1381 stem inserts and handwheel stops turning.

Notes/Comments

4	Notify the control room operator that the reactor coolant pump seals are isolated.	Procedure Step Attachment 3 step 4

SAT [ ] UNSAT [ ]

Standards	Control room is informed that the unit 1 RCP seals are isolated

Notes/Comments

>>>>> END OF EVALUATION <<<<<

STOP TIME _____

SIMULATOR, LABORATORY, IN–PLANT SETUP
(If Required)

NOTE: An Admin Key is required for performance of this attachment.

1. ___ ISOLATE SEAL INJECTION TO ALL RCPs BY CLOSING THE FOLLOWING VALVES (LOCATED IN UNIT 1 PENETRATION AREA):

   - 1-CH-318 (A RCP Seal Injection Isolation Valve)
   - 1-CH-314 (B RCP Seal Injection Isolation Valve)
   - 1-CH 310 (C RCP Seal Injection Isolation Valve)

2. ___ CLOSE 1-CC-757 (CC RETURN FROM RCP THERMAL BARRIER) (LOCATED AT PENETRATION 8).

3. ___ LOCALLY CLOSE 1-CH-MOV-1381 (SEAL WATER RETURN MOV) (LOCATED BEHIND THE BIT).

4. ___ NOTIFY THE CONTROL ROOM THAT ATTACHMENT 3 IS COMPLETE.