Tennessee Valley Authority, Post Office Box 2000, Decatur, Alabama 35609-2000

July 2, 2004

BFN-TS-405

10 CFR 50.90

U.S. Nuclear Regulatory Commission
ATTN: Document Control Desk
Mail Stop: OWFN, P1-35
Washington, D.C. 20555-0001

Gentlemen:

In the Matter of	)	Docket Nos. 50-259
Tennessee Valley Authority	)	50-260
		50-296

BROWNS FERRY NUCLEAR PLANT (BFN) - UNITS 1, 2, AND 3 - RESPONSE TO REQUEST FOR ADDITIONAL INFORMATION (RAI) RELATED TO TECHNICAL SPECIFICATIONS (TS) CHANGE NO. TS-405 - ALTERNATIVE SOURCE TERM (AST) (TAC NOS. MB5733, MB5734, MB5735)

This letter provides additional information requested by NRC in support of TS-405. TS-405, which was submitted on July 31, 2002, requested a license amendment and TS changes for application of AST methodology for BFN Units 1, 2, and 3.

NRC provided the RAI on June 21, 2004. The questions were discussed with the staff in teleconferences on June 15, and 21, 2004. Enclosure 1 provides TVA's response to each of the staff's questions.

The AST Loss-of-Coolant Accident (LOCA) analysis assumes an alternative leakage treatment pathway to the main condenser as a dose mitigation feature. Establishing this pathway requires a seismic ruggedness evaluation and

D030

Printed on recycled paper

possible modifications to the main steam system piping. During a June 15, 2004, teleconference NRC requested that TVA provide the Unit 1 seismic ruggedness evaluation for review as part of the approval of the Unit 1 AST LOCA analysis.

Enclosure 2 provides the Unit 1 MSIV Seismic Ruggedness Evaluation consisting of the "MSIV Seismic Ruggedness Verification for Browns Ferry Nuclear Plant Unit 1," and TVA's, "Seismic Evaluation Report." The evaluation is based on General Electric NEDC-31858, "BWROG Report For Increase In The MSIV Leakage Rate Limits and Elimination of Leakage Control System. Main steam line ruggedness provides an alternate leakage pathway to the main condenser as a dose mitigation feature and is required to support Unit 1 AST LOCA analysis.

NRC intends to complete the review of the Unit 1 MSIV Seismic Ruggedness Evaluation in time to support the approval of TS-405. However, if for some unforeseen reason, the review of the seismic ruggedness evaluation cannot be completed to support issuance of the Safety Evaluation, TVA proposes the following Unit 1 license condition.

> TVA has performed an analysis showing the main steam line seismic ruggedness and has submitted the results of the analysis to NRC. The analysis is based on General Electric NEDC-31858, "BWROG Report For Increase In The MSIV Leakage Rate Limits and Elimination of Leakage Control System." TVA will not implement Unit 1 Loss-of-Coolant Accident (LOCA) analysis portion of the Unit 1 AST analysis until NRC completes review of the seismic ruggedness evaluation.

There are no regulatory commitments contained in this letter. If you have any questions about this, please telephone me at (256) 729-2636.

Pursuant to 28 U. S. C. § 1746 (1994), I declare under penalty of perjury that the foregoing is true and correct. Executed on July 2, 2004.

Sincerely,

T. E. Abney
Manager of Licensing
and Industry Affairs

Enclosures

1. Response To The June 21, 2004, Request For Additional Information (RAI) Relating To Technical Specifications Change No. TS-405 Alternative Source Term (AST)
2. BFN Unit 1 MSIV Seismic Ruggedness Evaluation

Enclosures
cc (Enclosures):

State Health Officer
Alabama State Department of Public health
RSA Tower – Administration
Suite 1552
P.O. Box 30310
Montgomery, Alabama 36130-3017

U.S. Nuclear Regulatory Commission
Region II
Sam Nunn Atlanta Federal Center
61 Forsyth Street, SW, Suite 23T85
Atlanta, Georgia 30303-3415

Mr. Stephen J. Cahill, Branch Chief
U.S. Nuclear Regulatory Commission
Region II
Sam Nunn Atlanta Federal Center
61 Forsyth Street, SW, Suite 23T85
Atlanta, Georgia 30303-8931

NRC Senior Resident Inspector
Browns Ferry Nuclear Plant
10833 Shaw Road
Athens, AL 35611-6970

Kahtan N. Jabbour, Senior Project Manager
U.S. Nuclear Regulatory Commission
(MS 08G9)
One White Flint, North
11555 Rockville Pike
Rockville, Maryland 20852-2739

Eva A. Brown, Project Manager
U.S. Nuclear Regulatory Commission
(MS 08G9)
One White Flint, North
11555 Rockville Pike
Rockville, Maryland 20852-2739

ENCLOSURE 1

TENNESSEE VALLEY AUTHORITY
BROWNS FERRY NUCLEAR PLANT
UNITS 1, 2, AND 3

RESPONSE TO THE JUNE 21, 2004, REQUEST FOR ADDITIONAL INFORMATION (RAI) RELATING TO TECHNICAL SPECIFICATIONS (TS) CHANGE No. TS-405 ALTERNATIVE SOURCE TERM (AST)

This enclosure provides additional information requested by NRC in support of TS-405. NRC provided the RAIs on June 21, 2004. These were discussed with the staff in teleconferences on June 15, and 21, 2004.

NRC Request 1

At the bottom of Page 5 of the replacement pages for Enclosure 2, there is a reference to a "new control room X/Q value associated with an instantaneous ground level puff release." A similar reference occurs on page 36, paragraph 3.1.1.2, and in Table 3-5. These references were present on the original pages as well. In a letter dated March 26, 2003, Tennessee Valley Authority (TVA) agreed to use the current licensing basis X/Q value rather than pursuing the new instantaneous puff model. Please confirm that this is still the position of TVA and that failure to remove these references in the updated pages was an oversight.

TVA Response 1

Failure to remove reference to the instantaneous puff release was not an oversight on TVA's part. TVA will continue to use the current X/Q licensing basis rather than pursuing the instantaneous puff model shown on page 5 of the Safety Assessment.

In the March 26, 2003 letter (Reference 1), TVA indicated the new puff release X/Q dose is conservative when compared to a calculation based on the current Updated Final Safety Analysis Report (UFSAR) and the existing UFSAR X/Q would continue to be the licensing basis for the main steam line break accident. In Enclosure 5 of the TS-405 submittal (Reference 2), TVA proposed changes to the UFSAR associated with the implementation of AST, which included the use of the puff model X/Q. However, following approval of AST by NRC, the final changes to the UFSAR will not include discussions of the new Main Steam Line Break puff release dispersion X/Q values, but rather will retain the current UFSAR X/Q values.

NRC Request 2

Please discuss the status of the regulatory commitment made in your letter dated December 9, 2002, regarding the seismic ruggedness analyses and modifications for Unit 1 alternative main steam isolation valve (MISV) leakage treatment path. When would this analysis be available for staff review?

TVA Response 2

The seismic ruggedness analysis for the Unit 1 MSIV leakage treatment pathway is complete. The Unit 1 MSIV Seismic Ruggedness Evaluation consisting of the "MSIV Seismic Ruggedness Verification At Browns Ferry Nuclear Plant Unit 1," and TVA's, "Seismic Evaluation Report" are provided in Enclosure 2. Required modifications to Unit 1 will be implemented prior to restart from its extended outage that began in March of 1985.

NRC Request 3

The original submittal requested, in part, cancellation of License Condition 2.C.(4) for Units 2 and 3. However, by submitting the updated analyses the condition was satisfied. The May 17, 2004, letter did not request that the condition also be cancelled for Unit 1, now that the Unit 1 analyses have been submitted. Thus, it is the staff's understanding that the license condition remains effective for Unit 1. Please confirm the staff's understanding.

TVA Response 3

Unit 1 License Condition 2.C.(4) continues to remain in effect. The subject matter of the Unit 1 License Condition 2.C.(4) and the Units 2 and 3 License Condition 2.C.(4) are not related. The Units 2 and 3 License Condition 2.C.(4) was issued as part of Amendment 254, Power Uprate (Reference 3). The condition required TVA to perform analysis of the design basis loss-of–coolant accident (LOCA), confirm off-site and on-site dose limits, obtain NRC approval of the results and make necessary modifications. In response to this license condition, by letter dated March 30, 1999 (Reference 4), TVA forwarded the results of the LOCA analysis. By letter dated August 3, 1999 (Reference 5), NRC stated that TVA had resolved the portion of the condition which required TVA to submit the dose consequences for a LOCA, however; the condition would remain open until the required modifications are completed. These modifications were completed as required by the license condition. Accordingly, the original TS 405 submittal requested deletion of License Condition 2.C.(4) for Units 2 and 3.

Unit 1 License Condition 2.C.(4) was issued as part of Amendment 234, "Request To Convert To Improved Standard Technical Specifications Consistent With NUREG-1433," to allow approval of Amendment 234 without all the supporting analysis complete for Unit 1. The TS 405 submittal referenced the

Unit 1 License Condition 2.C.(4) that would allow approval of AST for Unit 1 without the supporting analysis. These supporting analyses were submitted in Enclosure 3 of TVA's May 17, 2004 letter (Reference 6). As such, Unit 1 License Condition 2.C.(4) no longer needed to allow approval of AST.

Since all of the analyses associated with Amendment 234 that were the subject of Unit 1 License Condition 2.C.(4) have not been submitted, it remains effective. TVA proposed a plan for resolution of Unit 1 License Condition 2.C.(4) in a letter dated June 16, 2004 (Reference 12).

NRC Request 4

Please confirm that, for Browns Ferry Units 1, 2, and 3, all equipment required to meet Title 10, *Code of Federal Regulations* (10 CFR), Section 50.49, are qualified to total radiation dose expected during normal operation over the installed life of the equipment, and the radiation environment associated with the most severe design-basis accident during or following which the equipment is required to remain functional, including the radiation resulting from recirculating fluids for equipment located near the recirculating lines and including the dose-rate effects pursuant to 10 CFR 50.49(e)(4). Alternatively, either, (a) confirm the radiation doses used for the environmental qualification analyses at both current licensed thermal power and extended power uprate conditions have been adjusted upward to include the increased radiation doses resulting from the proposed alternative source term (AST), or (b) describe the new method (versus type testing) for demonstrating components are qualified pursuant with the requirements of 10 CFR 50.49 and provide justification that components are qualified for the increased radiation doses resulting from the proposed AST pursuant with the requirements of General Design Criteria 4 of 10 CFR Part 50, Appendix A and 10 CFR 50.49.

TVA Response 4

As previously provided in our March 26, 2003 (Reference1), reply to the October 15, 2002, RAI, TVA has elected to retain the TID-14844 assumptions for performing the required environmental qualification (EQ) analyses. The radiation doses used for the EQ analyses at both current licensed thermal power and Extended Power Uprate (EPU) conditions are adjusted upward from the original values based on the determined source terms of the ORIGEN computer code for the respective power level. The BFN AST analysis considers the source term from the Fission Product Inventory shown on Table 2-2 of the Safety Assessment. A reactor thermal power of 4031 MWt (102 percent of 3952 MWt) is also used.

Regulatory Guide 1.183, "Alternative Radiological Source Terms for Evaluating Design Basis Accidents at Nuclear Power Reactors," Section 1.3.5, states that licensees may use either the AST or the TID-14844 assumptions for performing the required EQ analyses. It further states that no plant modifications are

required to address the impact of the difference in source term characteristics (i.e., AST vs TID 14844) on EQ doses pending the outcome of the generic issue. The issue was subsequently evaluated by Generic Safety Issue 187. Supplement 25 to NUREG-0933, "A Prioritization of Generic Safety Issues," dated June 30, 2001, provides the resolution of Generic Issue 187, "The Potential Impact of Postulated Cesium Concentration on Equipment Qualification." The supporting description states that the Sandia National Laboratories' report, "Evaluation of Radiological Consequences of Design Basis Accidents at Operating Reactors Using the Revised Source Term," dated September 28, 1998, showed that 1) for equipment exposed to the containment atmosphere, the TID-14844 source term and the gap and in-vessel releases in the AST produced similar integrated doses, and 2) for equipment exposed to suppression pool water, the integrated doses calculated with the AST remain enveloped by those calculated with TID-14844 for the first 145 days post accident for a BWR, including the 30 percent vs. 1 percent release of cesium. There are no instruments in the suppression pool that are within the EQ program.

The BFN EQ program is based on qualification for 100 days post accident. Based on the above, the continued use of the TID-14844 source term provides integrated doses for equipment which envelope those that would be calculated using AST. Therefore, following implementation of AST, BFN will continue to meet their commitment to 10 CFR 50.49 by using a radiation environment associated with the most severe design basis accident.

With regard to the BFN EQ program qualification time of 100 days post accident. An internal memo issued in January 1983, established a maximum post accident operating time of 100 days within TVA. This is publicized in various correspondences with NRC. Enclosure 3 of a May 20, 1983, letter (Reference 7) that provided a Justification For Continued Operation for various equipment indicated a maximum post LOCA operating time of 100 days. In a meeting with NRC on September 16, 1985, as shown in October 9, 1985, NRC meeting summary (Reference 8), TVA stated the EQ program is based on 100 days post LOCA operation. In NRC inspection reports for the Browns Ferry EQ program dated September 1, 1988 (Reference 9), and December 14, 1990 (Reference 10), the inspectors reviewed areas such as required post-accident operating time compared to the duration of time equipment was qualified and determined that the EQ program meets the requirements of 10 CFR 50.49.

TVA has subsequently submitted other TS changes, including Power Uprate, using 100 days qualification post accident as a basis for the EQ program (Reference 3).

NRC Request 5

In TVA's December 9, 2002 letter, TVA responded to staff questions regarding assumptions used in assessing MSIV leakage deposition (NRC request 5, page

E1-17). Please confirm that the responses provided, including piping length, surface areas, etc., are valid for BFN Unit 1 as well.

TVA Response 5

The Unit 1 configuration including piping length, surface areas etc., are the same as the Units 2 and 3 configuration. Therefore, the TVA response to NRC Request 5 in TVA's December 9, 2002 letter (Reference 11), is applicable to the Unit 1 configurations.

NRC Request 6

In the response to NRC Request 3 page E1-8 of the May 17, 2004 letter, the licensee stated:

> "The CS [core spray] ECCS [emergency core cooling system] injection flow delivered to the reactor vessel mixes with the sodium pentaborate (SP) and spills from the reactor vessel through the recirculation line break flushing SP to the suppression pool."

The pH control of the suppression pool is dependent on the transfer of a quantity of SP to balance the acids produced by radiolytic action and other sources. From the information provided, it appears that the SP is mixed primarily in the core region and lower head regions of the vessel, although it is unclear what degree of mixing of water containing SP with injected water would be required to assure that sufficient SP is transported out the break and to the suppression pool. The following questions are related to this concern:

NRC Request 6.a

In the event that both low pressure coolant injection (LPCI) trains are operating, does the core level remain essentially at the top of the jet pumps with the LPCI water being spilled into the annulus from the top of the jet pumps and out the break with no mixing with the SP containing water?

TVA Response 6.a

For a large break LOCA of the BFN recirculation system piping, there will always be one loop (two pumps) of the CS system available for ECCS injection flow, both short term ($\leq$ 10 minutes) and long term (> 10 minutes). In the BFN LOCA analysis, a large break LOCA of the recirculation system piping with the limiting single failure constitutes the maximum loss of ECCS makeup capacity. As a consequence of the single failure, a complete train each of Residual Heat Removal (RHR) Low Pressure Coolant Injection (LPCI) and CS ECCS injection capability is lost. This results in one loop (two pumps) of CS and one loop (two pumps) of RHR LPCI remaining available. However, the remaining available loop of RHR LPCI flow is assumed lost directly through the break.

In the event that RHR LPCI flow exists in the short term (≤ 10 minutes), the RHR LPCI flow would contribute to core reflood, and then overflow the jet pumps, enter the annulus, and exit the vessel through the break. BFN Updated Final Safety Analysis Report (UFSAR) Section 14.6.3.3.2.1 states that the RHR pumps are switched from the LPCI mode to the containment cooling mode at 10 minutes. Therefore, in the long term, RHR flow has no influence on the CS ECCS injection capability to maintain water level and continue the flushing action of SP to the suppression pool. However, although LOCA containment analysis dictates redirection of available LPCI capacity to containment cooling in the long term, LPCI flow would assist in providing core reflood with the resulting contribution to the lower head region of the reactor vessel providing additional flow for the lower head mixing and vessel coolant exit through the break as discussed in the response to RAI-6.c.

NRC Request 6.b

In the event that one train of LPCI is operating (through single failure or isolation) is the momentum of injection capable of forcing flow into the lower head region and out the non active jet pumps in the reverse direction? Are controls needed to isolate one LPCI after SLC injection since it would promote mixing and sweeping of SP water from the vessel?

TVA Response 6.b

No controls are needed for the isolation of RHR LPCI injection in the event it should be operating since it does not substantially affect the mixing and sweeping SP from the vessel as credited in the analysis. As stated in the response to RAI-6.a, in the event that RHR LPCI flow exists in the short term (≤ 10 minutes), the RHR LPCI flow would contribute to core reflood, and then overflow the jet pumps, enter the annulus, and exit the vessel through the break. BFN UFSAR Section 14.6.3.3.2.1 states that the RHR pumps are switched from the LPCI mode to the containment cooling mode at 600 seconds, or 10 minutes. Since LPCI is a short term operation in LOCA analyses, no controls are needed to isolate RHR LPCI flow in the event it should be operating. The CS ECCS capability to maintain water level and continue the flushing of SP to the suppression pool long term are discussed in the response to RAI-6.c.

NRC Request 6.c

The addition of core spray water would force some SP mixed water out of the jet pumps, but steaming due to decay heat could reduce this. What is the amount of SP mixed water that is removed from the vessel by CS ECCS operation? If this is the only mixing process, how long would it take to transport sufficient SP to the suppression pool? Would substantial SP remain in the vessel and be unavailable for pH control in the suppression pool? Does the chemical analysis

need to assume a quantity of SP remains in the vessel as part of its balance with the acid producing mechanisms?

TVA Response 6.c

The attached figure is a simplified representation of the BFN reactor vessel and internal components.

For a large break LOCA of the BFN recirculation system piping, there will always be one loop (two pumps) of the CS system available for ECCS injection flow at an assumed LOCA analysis flow rate of 5,600 gpm. This post LOCA CS ECCS injection takes suction from the suppression pool and discharges directly above the active reactor core region inside the core shroud. Based upon the design basis Reactor Core Isolation Cooling (RCIC) system flow rate of 600 gpm to offset maximum decay heat (by steaming), the net CS ECCS injection liquid flow rate is effectively 5,000 gpm immediately after the event. This net injection rate will be conservatively used throughout the event.

The free fluid volume of the entire reactor vessel and the recirculation system is approximately 109,300 gallons of liquid. With a net CS ECCS injection rate of 5,000 gpm, this volume would be refilled approximately every 22 minutes.

The free fluid volumes of the reactor vessel lower plenum and lower head zones are Zone A – 5,199 gallons, Zone B – 12,440 gallons, and Zone C – 8,468 gallons, for an approximate total of 26,107 gallons. At a net CS ECCS injection rate of 5,000 gpm, the lower plenum and lower head liquid volume would be displaced approximately every 5.2 minutes.

The Standby Liquid Control (SLC) system differential pressure and liquid control line (shown in the attached figure as Detail A) serves a dual function within the reactor vessel to inject SP solution into the coolant stream and to sense the differential pressure across the core support assembly during normal operation. The line enters the reactor vessel at a point below the core shroud as two concentric pipes. In the lower plenum, the two pipes separate, with the inner pipe being the SP injection line. As shown, this pipe is a vertical perforated sparger that disperses the SP in the lower shroud immediately below the reactor core plate and above the jet pump outlets.

Considering the Technical Specification minimum SLC single pump flow rate of 39 gpm, the credited AST SP volume of 4,000 gallons will be injected in less than two hours. The injection of the SP is concurrent with the CS ECCS injection occurring in reverse flow through the active core region to the lower plenum and lower head zones. The flow path of least resistance for the two flows is to travel axially along the guide tubes in Zones C and B until reaching the region below the guide tubes where the control rod drive mechanism housings are located (Zone A). There, the much smaller diameter of the drive mechanism housings

provides a radial flow path with a significantly larger flow area and lower losses than the guide tube region of the lower plenum. It is not expected that substantial radial flow would occur across the guide tubes.

The colder SP water has a slightly higher density than the CS ECCS water in the lower plenum and head (specific gravity of about 1.1). As a result, the SP water would fall or be entrained with the CS ECCS flow from the injection point to the region below the jet pump outlet. Here it would either mix with the CS ECCS water that is flowing radially across this region and be drawn upward into the jet pumps or be drawn off via the reactor vessel bottom head drain line.

The BFN reactor pressure vessel (RPV) includes a two inch bottom head drain line that is designed to provide a constant flow of reactor coolant from the RPV bottom head to the Reactor Water Cleanup System during reactor operation to obtain a representative temperature measurement in the bottom region of the RPV and for removal of cold water accumulation from the control rod drive system in-leakage from the bottom region of the RPV. The active flow path of this line is from the vessel bottom head to the Reactor Water Cleanup (RWCU) system that takes suction from recirculation loop A. The BFN large recirculation break LOCA analysis includes this bottom head drain line as a contribution to break flow during the LOCA event and this flow path remains active post LOCA for continued flow to the break. This lower vessel head flow path will provide additional assurance that SP will not stagnate in the lower head, but will be flushed out of the break to the suppression pool.

The suppression pool pH analysis for BFN shows that no credit for suppression pool buffering is required until greater than 12 hours post-LOCA. Prior to this time, the acid added to the suppression pool from radiolysis of water and radiolysis of cable is not enough to neutralize the CsOH that will exist. Based on this analysis, BFN conservatively assumes that SP injection will occur no later than two hours after accident initiation and adequate mixing occurs prior to 12 hours. In accordance with the AST pH analysis, an amount of SP would remain in the reactor vessel (and recirculation system) in equilibrium with the suppression pool SP concentration. The BFN suppression pool pH chemical analysis volumetric determination of pH conservatively includes the initial maximum volume of the suppression pool as well as the reactor coolant inventory to be borated to arrive at the final equilibrium SP concentration of the pool to be considered for pH control.

Because of the configuration of the RPV, the path CS ECCS injection takes through the RPV, and the configuration of the SLC injection piping the post LOCA flow through the lower head zone provides adequate volume turnover along with flushing of the SP out of the lower head zone to the suppression pool through either the jet pumps into the annulus or through the bottom head drain.

NRC Request 7

The staff considers the Administrative controls to restore isolation of the secondary containment and to terminate venting in the event of a refueling accident as an important defense in depth measure. In what document will these administrative controls be located? Other licensees have indicated that (1) designated personnel will be aware of which openings would require closure, (2) specific responsibilities for closure would be assigned, and (3) obstructions that could prevent closure would be easily removable. In some cases, licensees have specified a time to achieve closure and have added the administrative control definition to their technical specifications. Please provide the staff with additional information as to the content of the administrative controls.

TVA Response 7

The three BFN Units share a common secondary containment. BFN TS 3.6.4.1 and 3.6.4.2 require the secondary containment and the associated isolation valves to be operable in Modes 1, 2, and 3. Therefore, all three BFN Units would need to be in Modes 4 or 5 for secondary containment not to be operable. Additionally, the AST analyses do not take credit for secondary containment during the movement of irradiated fuel and during core alterations. TS-405 shows offsite doses following a refueling accident to be well below regulatory limits.

As a defense in depth measure, TVA plans to revise the following procedures:

The BFN General Operating Instruction for fuel movements during refueling will be revised to verify that prior to moving irradiated fuel, if secondary containment is not required to be operable, that it can be reestablished.

The BFN Technical Instruction for secondary containment penetration breach analysis currently contains actions to be taken in the event secondary containment cannot be maintained due to a breech exceeding the available margin. These steps include stationing an Auxiliary Unit Operator at the breach location that is responsible for closing the breach if instructed by the control room. This instruction will be revised to require calculating the size of the breaches in secondary containment even when the TSs do not require secondary containment.

The BFN Abnormal Operating Instruction for fuel damage during refueling provides the symptoms, automatic actions and operator actions for a fuel damage accident, including a dropped fuel bundle. Steps will be added to this instruction to ensure that secondary containment is intact or promptly restored following a postulated fuel handling accident.

References:

1. TVA letter to NRC dated March 26, 2003. "Browns Ferry Nuclear Plant (BFN) Units 1, 2, and 3 Response to Request for Additional Information Relating to Technical Specifications Change No. TS-405 – Alternative Source Term."

2. TVA letter to NRC dated July 31, 2002, "Browns Ferry Nuclear Plant (BFN) – Units 1, 2, and 3 – License Amendment – Alternative Source Term."

3. NRC letter to TVA dated September 8, 1998, "Issuance of Amendments RE: Power Uprate – Browns Ferry Plant, Units 2, and 3."

4. TVA letter to NRC dated March 30, 1999, "Browns Ferry Nuclear Plant (BFN) – Resolution of Control Room Emergency Ventilation (CREV) System Issues with Regard to License Condition Associated with Units 2 and 3 Power Uprate Operating License Amendments 254 and 214."

5. NRC letter to TVA dated August 3, 1999, "Safety Evaluation Supplement, Browns Ferry Nuclear Plant Units 2 and 3 - Radiological Dose Calculations Associated with Power Uprate License Amendment Nos. 254 and 214."

6. TVA letter to NRC dated May 17, 2004, "Browns Ferry Nuclear Plant (BFN) – Units 1, 2, and 3 – Response to Request for Additional Information and Unit 1 Analysis Results Related to Technical Specifications Change No. TS-405 – Alternative Source Term."

7. TVA letter to NRC dated May 20, 1983, This letter provided TVA's response to NRC regarding the Environmental qualification of equipment required by 10 CFR 50.49(g) for Browns Ferry Nuclear Plant.

8. NRC letter to TVA dated October 9, 1985, "Summary of Meeting On Environmental Qualifications of TVA Plants."

9. NRC letter to TVA dated September 1, 1988, "Environmental Qualification (10 CFR 50.49) Inspection (50-259, 260, 296/88-11)."

10. NRC letter to TVA dated December, 14, 1990, "Environmental Qualification (10 CFR 50.49) Inspection (50-259, 260, 296/90-22)."

11. TVA letter to NRC dated December 9, 2002, "Browns Ferry Nuclear Plant (BFN) – Units 1, 2, and 3 – Response to Request for Additional Information Relating to Technical Specifications Change No. TS-405 alternative Source Term."

References:

12. TVA letter to NRC dated June 16, 2004, "Browns Ferry Nuclear Plant (BFN) – Unit 1 – Plan for Satisfying License Condition 2.C.(4)."

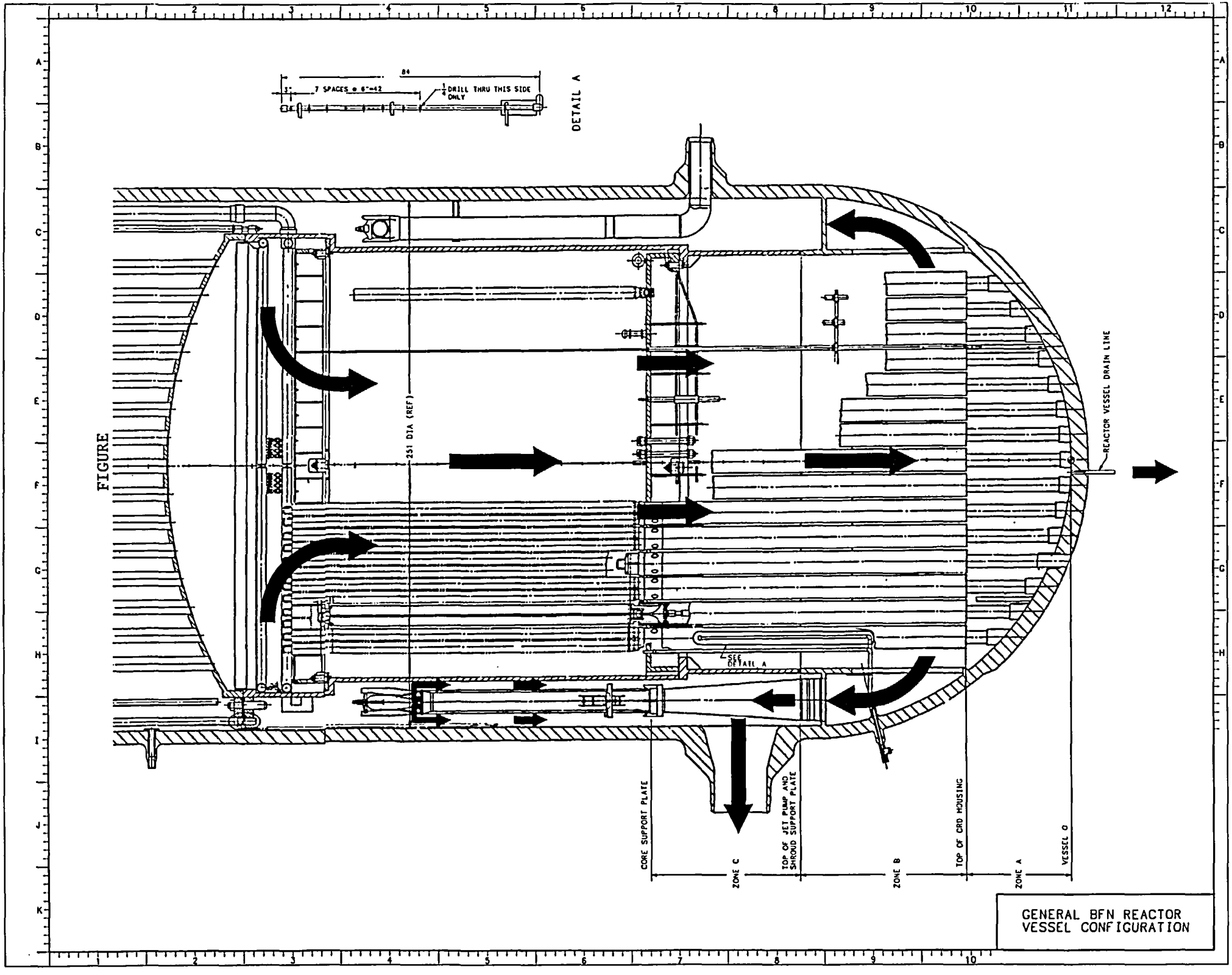

GENERAL BFN REACTOR VESSEL CONFIGURATION

ENCLOSURE 2

TENNESSEE VALLEY AUTHORITY
BROWNS FERRY NUCLEAR PLANT
UNIT 1

BFN UNIT 1 MSIV SEISMIC RUGGEDNESS EVALUATION

- MSIV Seismic Ruggedness Verification At Browns Ferry Nuclear Plant,
- Seismic Evaluation Report

MSIV SEISMIC RUGGEDNESS VERIFICATION AT BROWNS FERRY NUCLEAR PLANT UNIT 1

May 2004

Prepared for:

BROWNS FERRY UNIT 1 RESTART PROJECT

Prepared by:

FACILITY RISK CONSULTANTS, INC.

EXECUTIVE SUMMARY

This report summarizes the seismic ruggedness verification program for increasing the Main Steam Isolation Valve (MSIV) leakage rate limits at Browns Ferry Nuclear Plant Unit 1 (BFN-1). Key engineering attributes of the seismic verification program consisted of the following:

- Review of the MSIV seismic verification boundaries;
- In-plant screening walkdown evaluations and identification of potential outliers;
- Further evaluations and resolution of potential outliers;
- Recommendations for plant modifications to resolve outliers;
- Work order requests to address general maintenance and housekeeping items.

BFN-1 MSIV seismic ruggedness verification program was performed in accordance with the recommendations of the General Electric BWR Owners Group Report for Increasing MSIV Leakage Rate Limits and Elimination of Leakage Control Systems. MSIV leakage boundaries were established to ensure that the main steam piping from the outboard MSIV's to the turbine stop valves and the main steam drain line from the outboard MSIV's to and including the condenser itself are capable of being a pressure retaining boundary following a Design Basis Earthquake (DBE).

In-plant screening walkdown evaluations of piping and associated components within the seismic verification boundaries were performed in accordance with Walkdown Instruction WI-BFN-0-CEB-07, *"Engineering Walkdown Instruction for MSIV Seismic Ruggedness Verification."* A total of 15 subsystems within the seismic boundaries were included. Screening evaluations focused on key design attributes and seismic issues such as pipe spans and support integrity; seismic interaction issues including proximity impact and falling concerns; differential displacement of structures, equipment and piping; performance of seismic verification boundary components, among others. Screening tools such as seismic deflection estimates and charts for various plant features; pipe flexibility and seismic anchor movement evaluation charts; support and anchorage capacity screening charts; and others were used in the in-plant screening walkdown evaluations. Certain configurations identified during the in-plant screening walkdowns as not meeting the screening criteria were documented in the Potential Outlier Sheet (POS) as potential

outliers and for further evaluation and disposition. Walkdown results, including a total of 54 potential outliers identified, are documented in the Walkdown Data Packages (WDP's) for the respective subsystems.

Potential outliers identified during the in-plant screening walkdowns were further evaluated to the acceptance criteria of TVA Design Criteria BFN-50-C-7306, *"Qualification Criteria for Seismic Class II Piping, Pipe Supports, and Components."* Further evaluations and bounding analyses of these potential outliers consisted of hand calculations using basic engineering mechanics techniques for simple configurations, and rigorous piping analyses (TPIPE computer program) for more complex piping configurations. A total of 15 outliers were found to have not met the acceptance criteria. Plant modifications were designed and several Design Change Notices (DCN's) were issued to implement the changes so that all of these concerns were resolved. Furthermore, 15 maintenance and/or housekeeping items were also identified for corrective actions. Maintenance work order requests were issued to address these items.

Overall program results for the MSIV seismic ruggedness verification program for Browns Ferry Unit 1 are summarized in the following table:

Sub-system No.	Subsystem Description	No. of Potential Outliers	No. of Design Mods	No. of Maint. Items
1	MS Drain Line – Turbine Bldg. Main Steam Tunnel	4	0	0
2	MS Lines – Turbine Bldg.	2	0	1
3	MS Drain Line – Reactor Bldg. Main Steam Vault	2	0	0
4	HPCI/RCIC/Aux. Boiler Drains	8	2	1
5	MS Pressure Transmitters PT 1-72, 76, 82, 86 & 93	6	4	2
6	MS Sample Lines to Sampling Station	4	2	2
7	MS Bypass	1	0	0
8	MS Stop Valve Above Seat Drains	3	0	3
9	MS to Steam Seal Regulator	6	1	1
10	Steam Supply to RFP Turbines	6	1	2

Sub-system No.	Subsystem Description	No. of Potential Outliers	No. of Design Mods	No. of Maint. Items
11	Steam Supply to Steam Jet Air Ejectors (SJAE's)	6	2	1
12	Steam Supply to Off-Gas Preheaters	1	1	0
13	SJAE's Drain to Condenser	1	1	0
14	MS Drain Line (Turbine Bldg.) to Condenser	3	1	2
15	Condenser	1	0	0
	Total	**54**	**15**	**15**

TABLE OF CONTENTS

	Page
Executive Summary	i
1. INTRODUCTION	1-1
1.1 Report Organization	1-1
2. PROGRAM SCOPE	2-1
2.1 Seismic Verification Boundary	2-1
2.2 Seismic Walkdown Scope	2-2
3. SEISMIC VERIFICATION WALKDOWN	3-1
3.1 Seismic Verification Review Guidelines	3-2
3.2 Piping, Pipe Support and Equipment Attributes	3-2
3.2.1 Piping and Pipe Support Design Attributes	3-3
3.2.2 Vulnerable Pipe Joints	3-3
3.3.3 Other Potential Seismic Vulnerabilities	3-3
3.3 Equipment Design Attributes	3-4
3.4 Anchorage Design Attributes	3-5
3.4.1 Expansion Anchor Bolts Review Guidelines	3-5
3.4.2 Welded Anchorage Review Guidelines	3-5
3.5 Seismic Anchor Movement	3-6
3.6 Seismic Interaction Review (II/I and Proximity)	3-6
3.7 Seismic Verification Boundary Valves	3-7
3.8 Walkdown	3-8
3.9 Documentation	3-8
4. WALKDOWN OPEN ITEMS	4-1
4.1 Main Steam Drain Line – Turbine Bldg. Main Steam Tunnel	4-1
4.2 Main Steam – Turbine Bldg.	4-2
4.3 Main Steam Drain Line – Reactor Bldg. Main Steam Vault	4-3

TABLE OF CONTENTS (CONT'D)

		Page
4.4	HPCI/RCIC/Aux. Boiler Drains	4-4
4.5	Main Steam Pressure Transmitters PT 1-72, 76, 82, 86 & 93	4-5
4.6	Main Steam Sample Lines to Sampling Station	4-6
4.7	Main Steam Bypass	4-7
4.8	Main Steam Stop Valve Above Seat Drains	4-7
4.9	Main Steam to Steam Seal Regulator	4-8
4.10	Steam Supply to RFP Turbines	4-8
4.11	Steam Supply to Steam Jet Air Ejectors (SJAE's)	4-9
4.12	Steam Supply to Off-Gas Preheaters	4-10
4.13	SJAE's Drain to Condenser	4-11
4.14	MS Drain Line (Turbine Bldg.) to Condenser	4-11
4.15	Condenser	4-12
4.16	Summary of MSIV Seismic Walkdown Evaluations	4-13
5.	POTENTIAL OUTLIER RESOLUTION	5-1
5.1	Outlier Evaluation Guidelines	5-1
	5.1.1 Seismic Demand	5-1
	5.1.2 Equipment Anchorage Acceptance Criteria	5-2
	5.1.3 Pipe Support Acceptance Criteria	5-2
	5.1.4 Pipe Stress Acceptance Criteria	5-3
5.2	Outlier Evaluation Results	5-3
6.	SUMMARY AND RECOMMENDATIONS	6-1
6.1	Plant Modifications	6-1
6.2	Maintenance and Housekeeping Items	6-1
7.	REFERENCES	7-1

TABLE OF CONTENTS (CONT'D)

APPENDICES

		Page
APPENDIX A:	BFN-1 MSIV Seismic Ruggedness Verification Walkdown Data Packages	A-1
APPENDIX B:	BFN-1 MSIV Seismic Ruggedness Verification Outlier Resolution Calculation Packages	B-1
APPENDIX C:	BFN-1 MSIV Seismic Ruggedness Verification Plant Modification Design Calculation Packages and Maint. Work Orders	C-1

FIGURES

2-1	BFN-1 MSIV Seismic Verification Boundary	2-6
2-2	BFN-1 MSIV Seismic Walkdown by Subsystems – Package 1	2-7
2-3	BFN-1 MSIV Seismic Walkdown by Subsystems – Package 2	2-8
2-4	BFN-1 MSIV Seismic Walkdown by Subsystems – Package 3	2-9
2-5	BFN-1 MSIV Seismic Walkdown by Subsystems – Package 4	2-10
2-6	BFN-1 MSIV Seismic Walkdown by Subsystems – Package 5	2-11
2-7	BFN-1 MSIV Seismic Walkdown by Subsystems – Package 6	2-12
2-8	BFN-1 MSIV Seismic Walkdown by Subsystems – Package 7	2-13
2-9	BFN-1 MSIV Seismic Walkdown by Subsystems – Package 8	2-14
2-10	BFN-1 MSIV Seismic Walkdown by Subsystems – Package 9	2-15
2-11	BFN-1 MSIV Seismic Walkdown by Subsystems – Package 10	2-16
2-12	BFN-1 MSIV Seismic Walkdown by Subsystems – Package 11	2-17
2-13	BFN-1 MSIV Seismic Walkdown by Subsystems – Package 12	2-18
2-14	BFN-1 MSIV Seismic Walkdown by Subsystems – Package 13	2-19
2-15	BFN-1 MSIV Seismic Walkdown by Subsystems – Package 14	2-20
2-16	BFN-1 MSIV Seismic Walkdown by Subsystems – Package 15	2-21
3-1	Comparison of Database Site Spectra to BFN Design Basis Ground Spectrum	3-10

TABLE OF CONTENTS (CONT'D)

TABLES

		Page
2-1	BFN Unit 1 Mechanical Flow Diagrams	2-3
2-2	BFN Unit 1 MSIV Leakage Boundary Points	2-4
5-1	Outlier Resolution Summary for BFN-1 MSIV Seismic Ruggedness Verification Program	5-5
6-1	Summary of BFN-1 MSIV Seismic Ruggedness Verification Program	6-2
6-2	Summary of Plant Modifications, BFN-1 MSIV Seismic Ruggedness Verification Program	6-3
6-3	Summary of Misc. Maintenance & Housekeeping Items, BFN-1 MSIV Seismic Ruggedness Verification Program	6-5

1. INTRODUCTION

This report summarizes the work performed for supplemental plant-specific Main Steam Piping Seismic Verification. The verification program was performed in accordance with the recommendation of the General Electric BWR Owners Group Report for Increasing MSIV Leakage Rate Limits and Elimination of Leakage Control Systems (Reference 7-1). The objective of the supplemental plant specific walkdown verification was to identify specific design conditions associated with poor piping and component seismic performance. The walkdown was directed toward identification of the following specific phenomenon and issues:

- Piping Support Integrity Issues
- Seismic Interaction Issues of:
  - Failure and Falling (II/I Concerns)
  - Displacement and Proximity Impact Issues
- Differential Displacement of Structures, Equipment and Piping
- Performance of Seismic Verification Boundary Components

1.1 Report Organization

This report is organized as follows. Chapter 2 presents the scope of the program. Technical bases and evaluation approach for in-plant screening evaluations, including walkdown implementation, are described in Chapter 3. Summary of in-plant screening walkdowns and evaluations, including open items identified, is presented in Chapter 4, while that of potential outlier resolution is in Chapter 5. Overall summary and recommendations, including plant modifications and maintenance work orders, are provided in Chapter 6. References are listed in Chapter 7 of the report.

There are 3 appendices to this report. Appendix A contains a listing of walkdown data packages (WDP) which document the in-plant screening evaluations performed by the Walkdown Teams. Appendix B contains a list of engineering calculations which document the resolution of potential outliers by further analyses. A list of calculations

containing the engineering design of plant modifications for the resolution of BFN-1 MSIV outliers, as well as maintenance work order requests, are provided in Appendix C.

2. PROGRAM SCOPE

The walkdown scope included the drain path that will be established to convey leakage past the outboard Main Steam Isolation Valves (MSIV's) to the isolated condenser and includes piping, instrumentation, valves and equipment that would be required to maintain the drain pathway.

2.1 Seismic Verification Boundary

BFN-1 MSIV Leakage Containment Boundaries are described in Reference 7-2, and are shown in Figure 2-1. The associated flow diagrams are listed in Table 2-1, and the piping isolation boundaries defining the seismic verification boundary are shown in Table 2-2. Note that Unit 1 seismic boundaries are generally similar to those for Units 2 and 3.

The scope of the seismic verification walkdown presented in this report generally consists of the following portions of the Main Steam (MS) system beyond the outboard MSIV's:

1. Main Steam drain path to the condenser for any leakage past the isolated outboard MSIV's.
2. Main Steam piping from the outboard MSIV's to the Main Steam Stop Valves (MSV's).
3. Main Steam bypass piping from the Main Steam lines to the Bypass Valve Chest.
4. Main Condensers.
5. Additional piping and instrumentation within the Seismic Verification Boundary includes:
    - Stop Valve Above Seat Drains to Condenser
    - Steam Sample System
    - HPCI/RCIC Steam Drains to Main Steam
    - Auxiliary Boiler Drains to Main Steam
    - Main Steam Instrumentation
    - Steam to Steam Seal Regulator
    - Main Steam Supply to Reactor Feed Pumps
    - Main Steam Supply to Steam Jet Air Ejectors
    - Main Steam Supply to Off-Gas Preheaters

2.2 Seismic Walkdown Scope

The scope of the seismic verification walkdown included consideration of design conditions which in past earthquake experience have been associated with piping damage and could contribute to pressure boundary failure and inventory release. These conditions include support failure, falling of non-seismically designed plant features (II/I), proximity impact, and differential seismic anchor motion of structures, piping or equipment. The scope and extent of these conditions are consistent with the guidelines as specified in Reference 7-1 and are described in greater details in Chapters 3 and 4 of this report.

BFN-1 MSIV seismic ruggedness verification walkdowns were performed considering a total of 15 subsystems or portions within the MSIV seismic verification boundary, as follows:

1. Main Steam Drain Line – Turbine Bldg. Main Steam Tunnel
2. Main Steam – Turbine Bldg.
3. Main Steam Drain Line – Reactor Bldg. Main Steam Vault
4. HPCI/RCIC/Aux. Boiler Drains
5. Main Steam Pressure Transmitters PT 1-72, 76, 82, 86 & 93
6. Main Steam Sample Lines to Sampling Station
7. Main Steam Bypass
8. Main Steam Stop Valve Above Seat Drains
9. Main Steam to Steam Seal Regulator
10. Steam Supply to RFP Turbines
11. Steam Supply to Steam Jet Air Ejectors (SJAE's)
12. Steam Supply to Off-Gas Preheaters
13. SJAE's Drain to Condenser
14. Main Steam Drain Line (Turbine Bldg.) to Condenser
15. Condenser

Figures 2-2 to 2-16 highlight the extent of the seismic walkdown scope for each of the above 15 subsystems or portions within the BFN-1 MSIV seismic verification boundary

Table 2-1
BFN UNIT 1 MECHANICAL FLOW DIAGRAMS

Drawing Number	System Description
1-47E801-1	Main Steam
1-47E801-2	Main Steam
1-47E805-3	Heater Drains, Vents and Misc. Piping
1-47E807-1	Turbine Drains and Miscellaneous Piping
1-47E807-2	Turbine Drains and Miscellaneous Piping
1-47E812-1	High Pressure Coolant Injection System
1-47E813-1	Reactor Core Isolation Cooling System
0-47E815-1 1-47E815-3	Auxiliary Boiler System
1-47E610-43-1	Sampling and Water Quality System (Mechanical Control Diagram)

Table 2-2
BFN UNIT 1 MSIV LEAKAGE BOUNDARY POINTS

Leakage Boundary Point	Flow Diagram/ Drawing	Comment
1-FCV-1-15	1-47E801-1	Outboard MSIV for Main Steam Line A
1-FCV-1-27	1-47E801-1	Outboard MSIV for Main Steam Line B
1-FCV-1-38	1-47E801-1	Outboard MSIV for Main Steam Line C
1-FCV-1-52	1-47E801-1	Outboard MSIV for Main Steam Line D
1-FCV-1-56	1-47E801-1	Outboard containment isolation valve for Primary Containment steam drains
1-1-521 1-1-527	1-47E801-1	Normally closed Main Steam Drain manual isolation valves
1-43-631	1-47E610-43-1	Normally closed Main Steam Sample System manual isolation valve
1-43-631A	1-47E610-43-1	Normally closed Main Steam Sample System manual isolation valve
1-43-632	1-47E610-43-1	Normally closed Main Steam Sample System manual isolation valve
1-FCV-1-74	1-47E801-2	Main Turbine Stop Valve for Steam Line A
1-FCV-1-78	1-47E801-2	Main Turbine Stop Valve for Steam Line B
1-FCV-1-84	1-47E801-2	Main Turbine Stop Valve for Steam Line C
1-FCV-1-88	1-47E801-2	Main Turbine Stop Valve for Steam Line D
1-FCV-1-61 1-FCV-1-62 1-FCV-1-63 1-FCV-1-64 1-FCV-1-65 1-FCV-1-66 1-FCV-1-67 1-FCV-1-68 1-FCV-1-69	1-47E801-2	Main Steam Bypass Valve Chest
1-FCV-1-127	1-47E801-2	RFP Turbine A Stop Valve
1-FCV-1-135	1-47E801-2	RFP Turbine B Stop Valve
1-FCV-1-143	1-47E801-2	RFP Turbine C Stop Valve
1-FCV-6-153	1-47E807-2	Normally closed motor operated isolation valve – RFP Turbine A
1-FCV-6-155	1-47E807-2	Normally closed motor operated isolation valve – RFP Turbine B
1-FCV-6-157	1-47E807-2	Normally closed motor operated isolation valve – RFP Turbine C
1-FCV-6-122	1-47E807-2	Normally closed motor operated isolation valve – RFP Turbine A
1-FCV-6-127	1-47E807-2	Normally closed motor operated isolation valve – RFP Turbine B

Table 2-2 (Cont.)
BFN UNIT 1 MSIV LEAKAGE BOUNDARY POINTS

Leakage Boundary Point	Flow Diagram/ Drawing	Comment
1-FCV-6-132	1-47E807-2	Normally closed motor operated isolation valve – RFP Turbine C
1-PCV-1-151	1-47E801-2	Normally open air operated isolation valve – SJAE A
1-PCV-1-166	1-47E801-2	Normally open air operated isolation valve – SJAE A
1-6-826	1-47E805-3	Check Valve – SJAE A
1-PCV-1-153	1-47E801-2	Normally open air operated isolation valve – SJAE B
1-PCV-1-167	1-47E801-2	Normally open air operated isolation valve – SJAE B
1-6-822	1-47E805-3	Check Valve – SJAE B
1-SHV-1-741	---	New manual isolation valve for Off-Gas Preheater – per DCN 51112
1-CKV-1-742	---	New check valve for Off-Gas Preheater – per DCN 51112
1-SHV-1-743	---	New manual isolation valve for Off-Gas Preheater – per DCN 51112
1-CKV-1-744	---	New check valve for Off-Gas Preheater – per DCN 51112
1-FCV-73-6B	1-47E812-1	Normally open air operated isolation valve - HPCI
1-FCV-71-6B	1-47E813-1	Normally open air operated isolation valve - RCIC
1-12-635	1-47E815-3	Normally closed manual isolation valve - Aux. Boiler
1-12-637	1-47E815-3	Normally closed manual isolation valve - Aux. Boiler
1-12-623	1-47E815-3	Normally closed manual isolation valve - Aux. Boiler
1-12-625	1-47E815-3	Normally closed manual isolation valve - Aux. Boiler
1-12-824	0-47E815-1	Normally closed manual isolation valve - Aux. Boiler
1-FCV-1-145	1-47E807-2	Normally closed motor operated isolation valve – Steam Seal Regulator
1-FCV-1-154	1-47E807-2	Normally closed motor operated isolation valve – Steam Seal Regulator
1-PCV-1-147	1-47E807-2	Air operated pressure control valve/relief valve – Steam Seal Regulator
1-FCV-6-100	1-47E807-1	Normally closed motor operated isolation valve - Stop valve above seat drains
1-FCV-6-101	1-47E807-1	Normally closed motor operated isolation valve - Stop valve above seat drains
1-FCV-6-102	1-47E807-1	Normally closed motor operated isolation valve - Stop valve above seat drains
1-FCV-6-103	1-47E807-1	Normally closed motor operated isolation valve - Stop valve above seat drains
Condenser A	---	The condenser is the ultimate boundary for the MSIV leakage path.
Condenser B	---	The condenser is the ultimate boundary for the MSIV leakage path.
Condenser C	---	The condenser is the ultimate boundary for the MSIV leakage path.
Misc. Components	1-47E801-1 1-47E801-2	Miscellaneous test, vent, drain and instrument connections

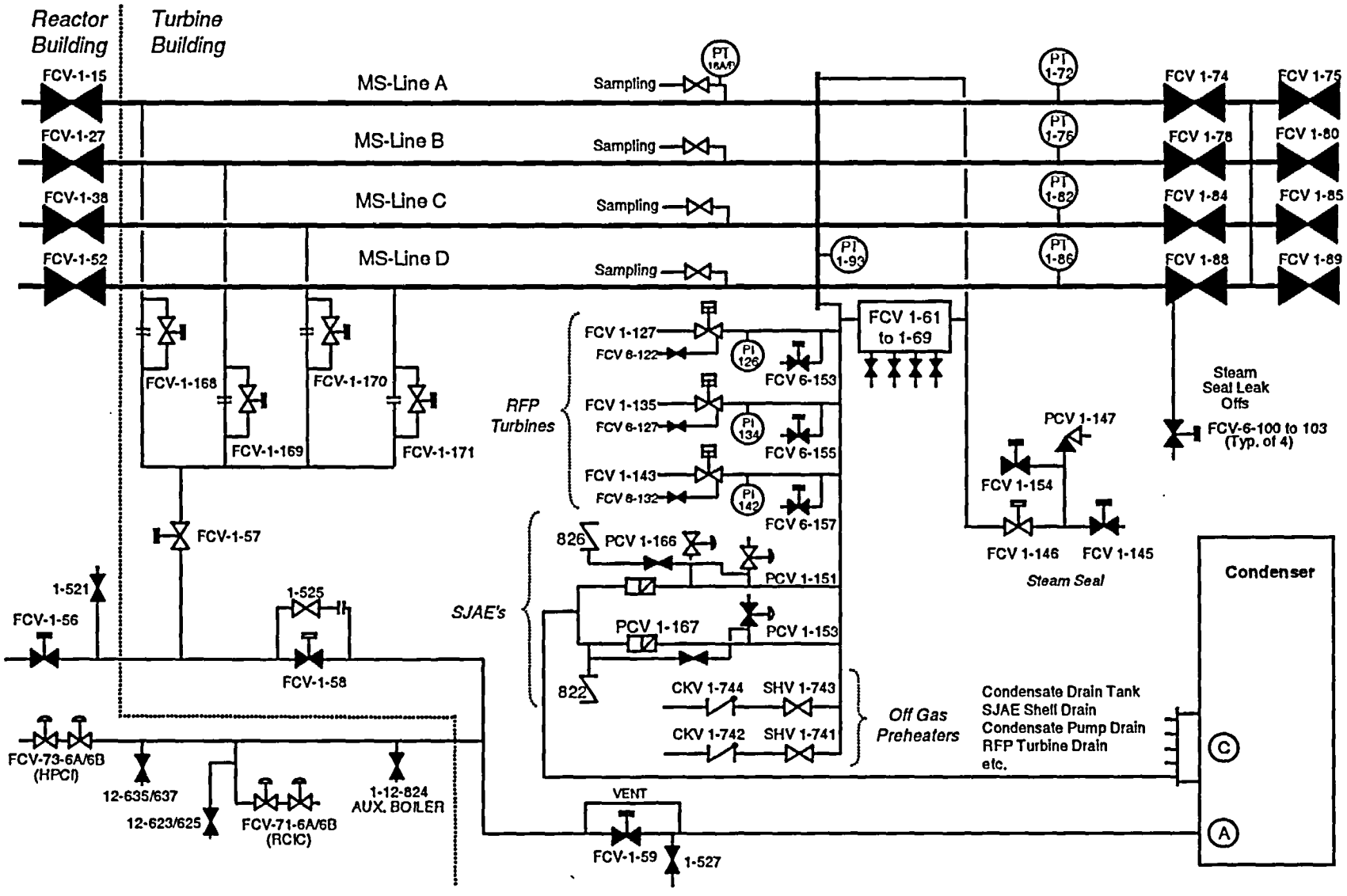

Figure 2-1: BFN Unit 1 MSIV Seismic Verification Boundary

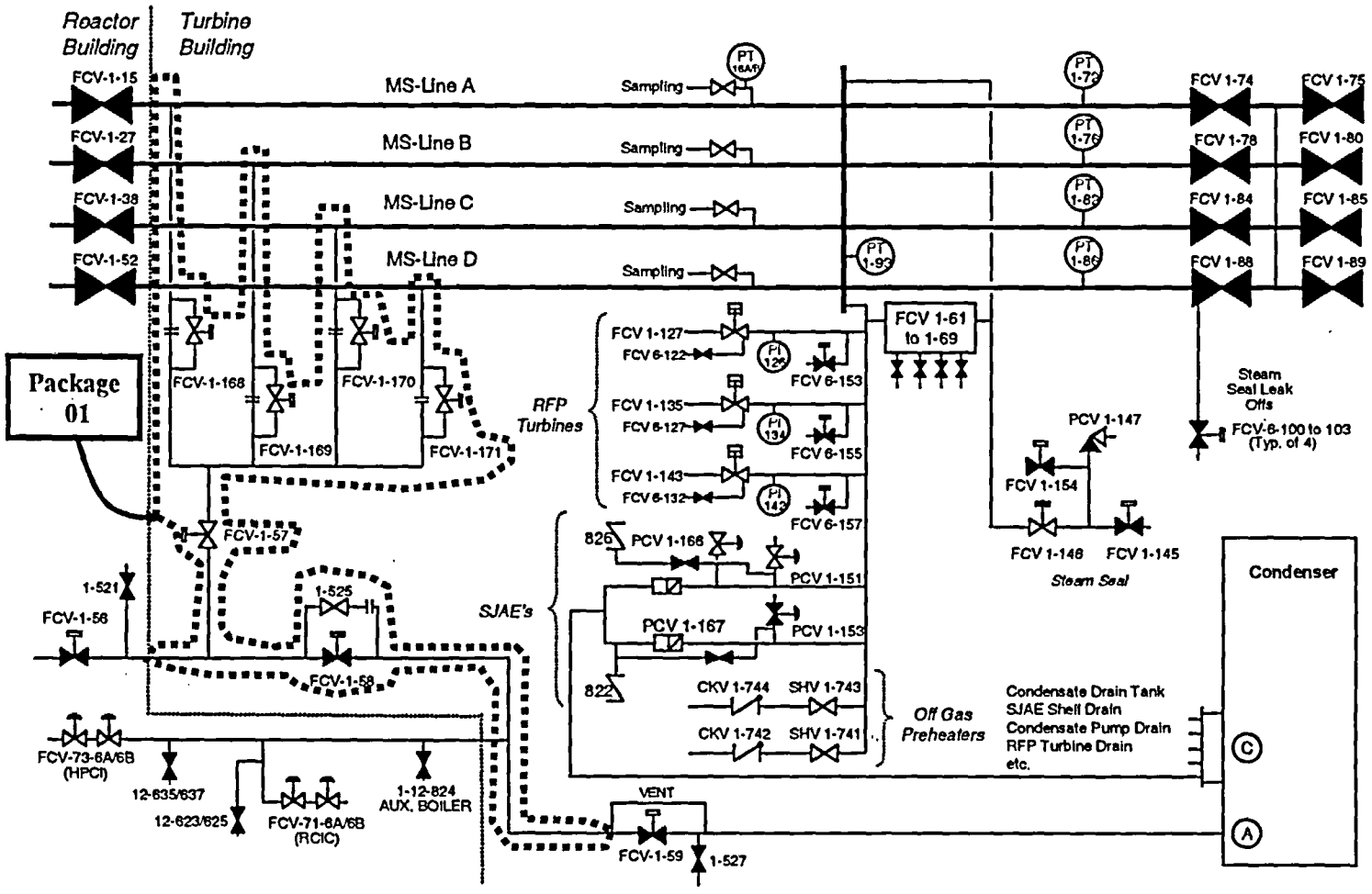

BFN UNIT 1 MSIV SEISMIC VERIFICATION WALKDOWN BOUNDARY

Figure 2-2: BFN Unit 1 MSIV Seismic Walkdown Scope by Subsystems – Package 1

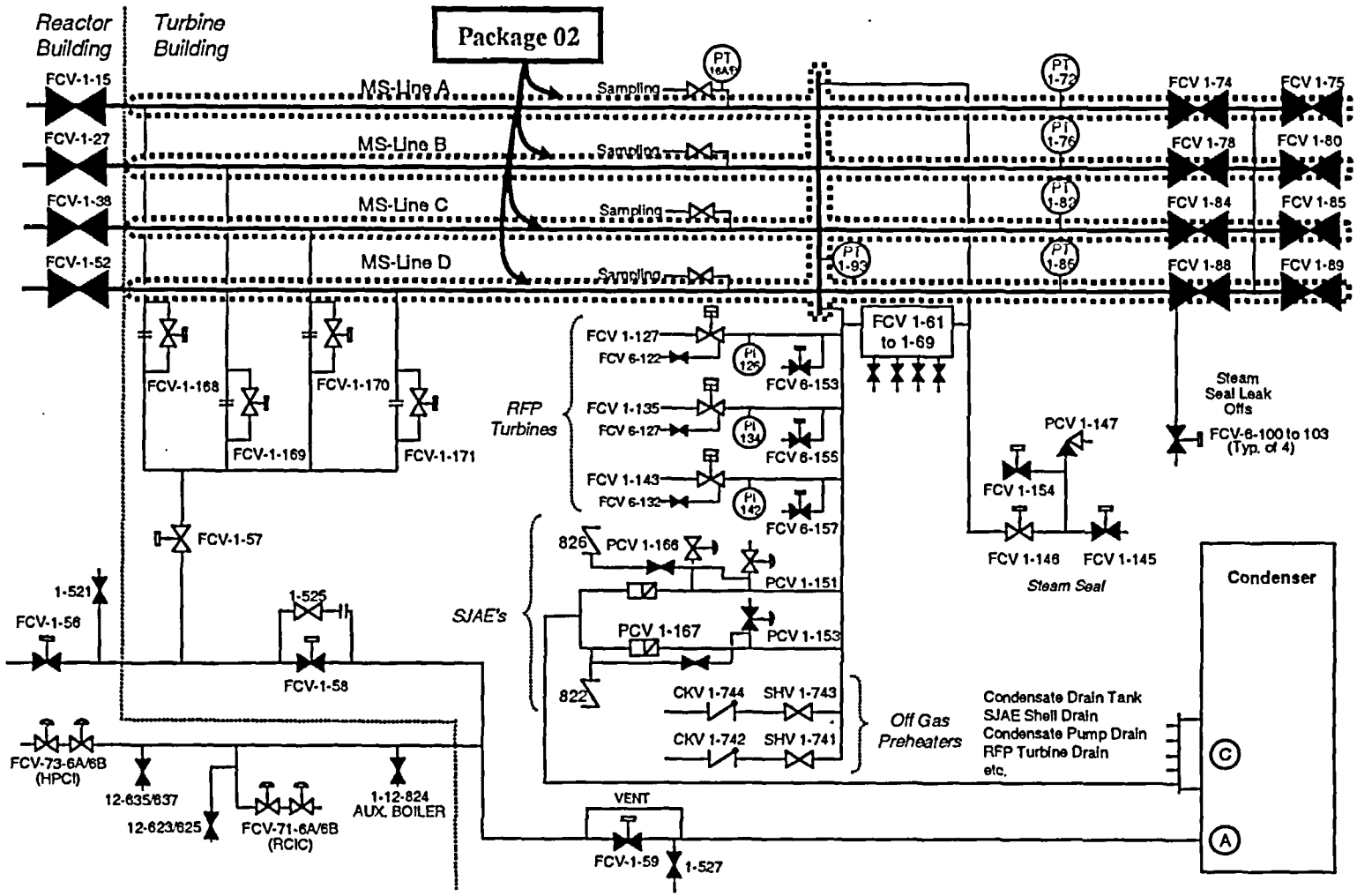

BFN UNIT 1 MSIV SEISMIC VERIFICATION WALKDOWN BOUNDARY

Figure 2-3: BFN Unit 1 MSIV Seismic Walkdown Scope by Subsystems – Package 2

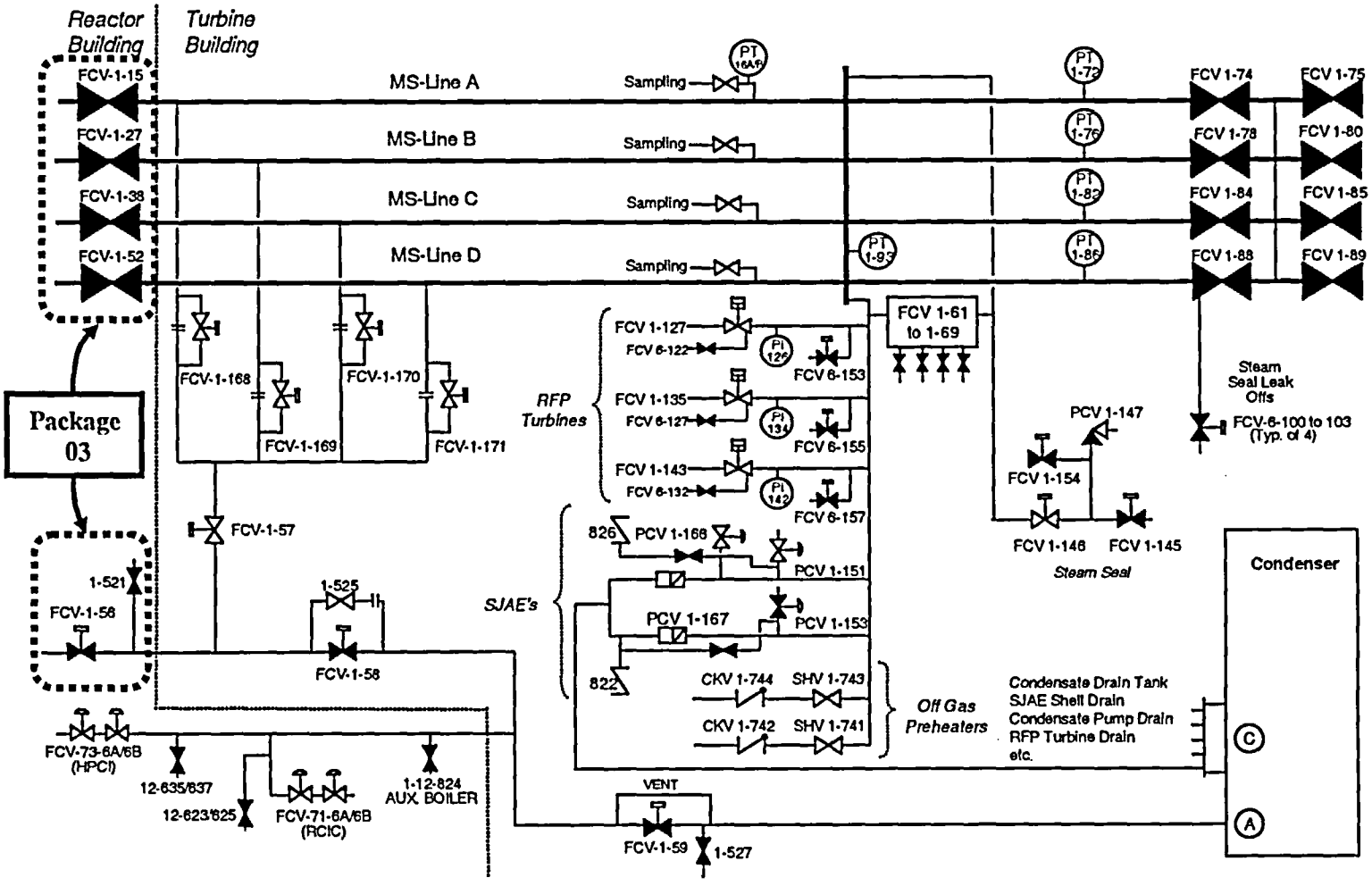

BFN UNIT 1 MSIV SEISMIC VERIFICATION WALKDOWN BOUNDARY

Figure 2-4: BFN Unit 1 MSIV Seismic Walkdown Scope by Subsystems – Package 3

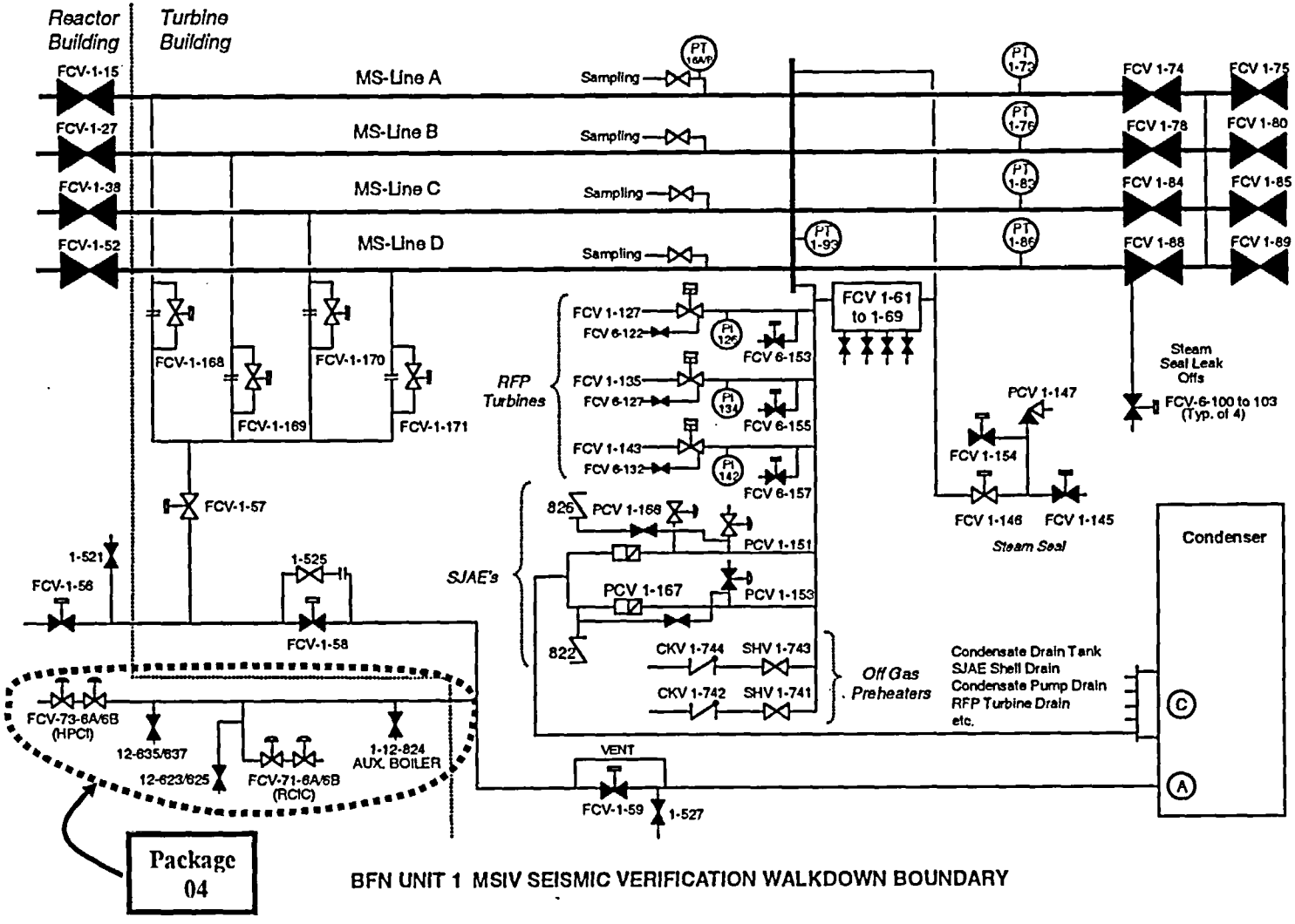

Figure 2-5: BFN Unit 1 MSIV Seismic Walkdown Scope by Subsystems – Package 4

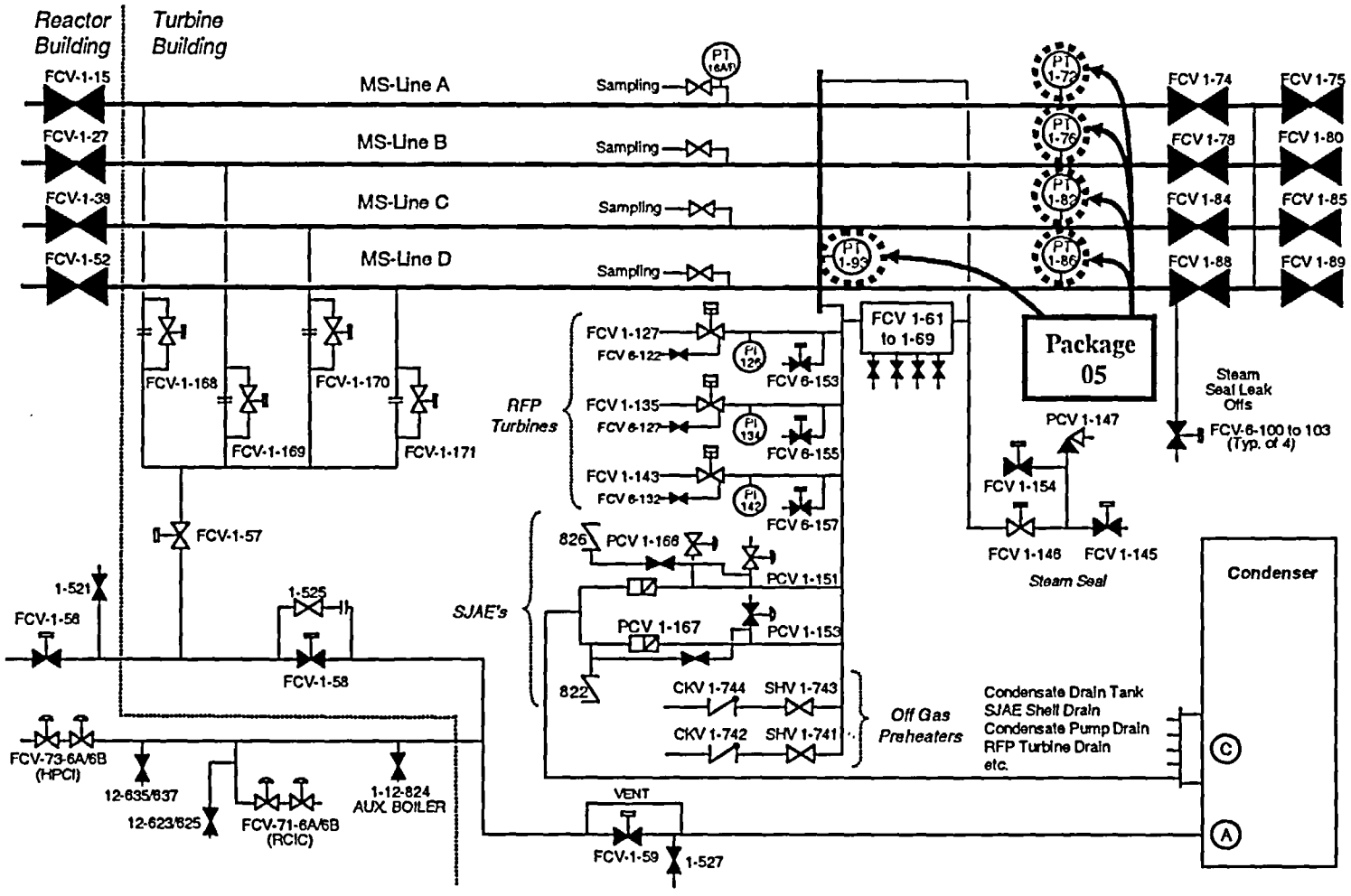

BFN UNIT 1 MSIV SEISMIC VERIFICATION WALKDOWN BOUNDARY

Figure 2-6: BFN Unit 1 MSIV Seismic Walkdown Scope by Subsystems – Package 5

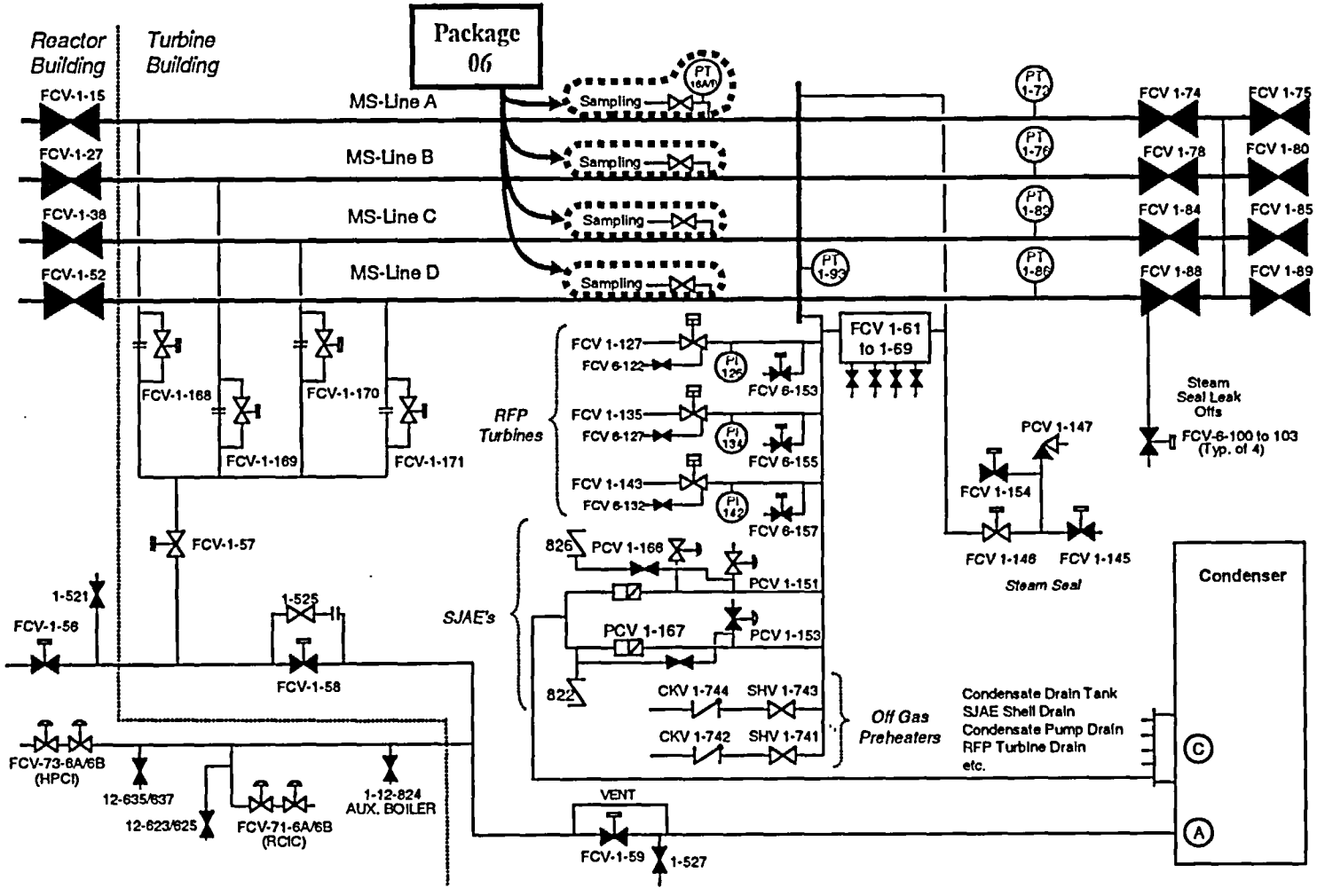

BFN UNIT 1 MSIV SEISMIC VERIFICATION WALKDOWN BOUNDARY

Figure 2-7: BFN Unit 1 MSIV Seismic Walkdown Scope by Subsystems – Package 6

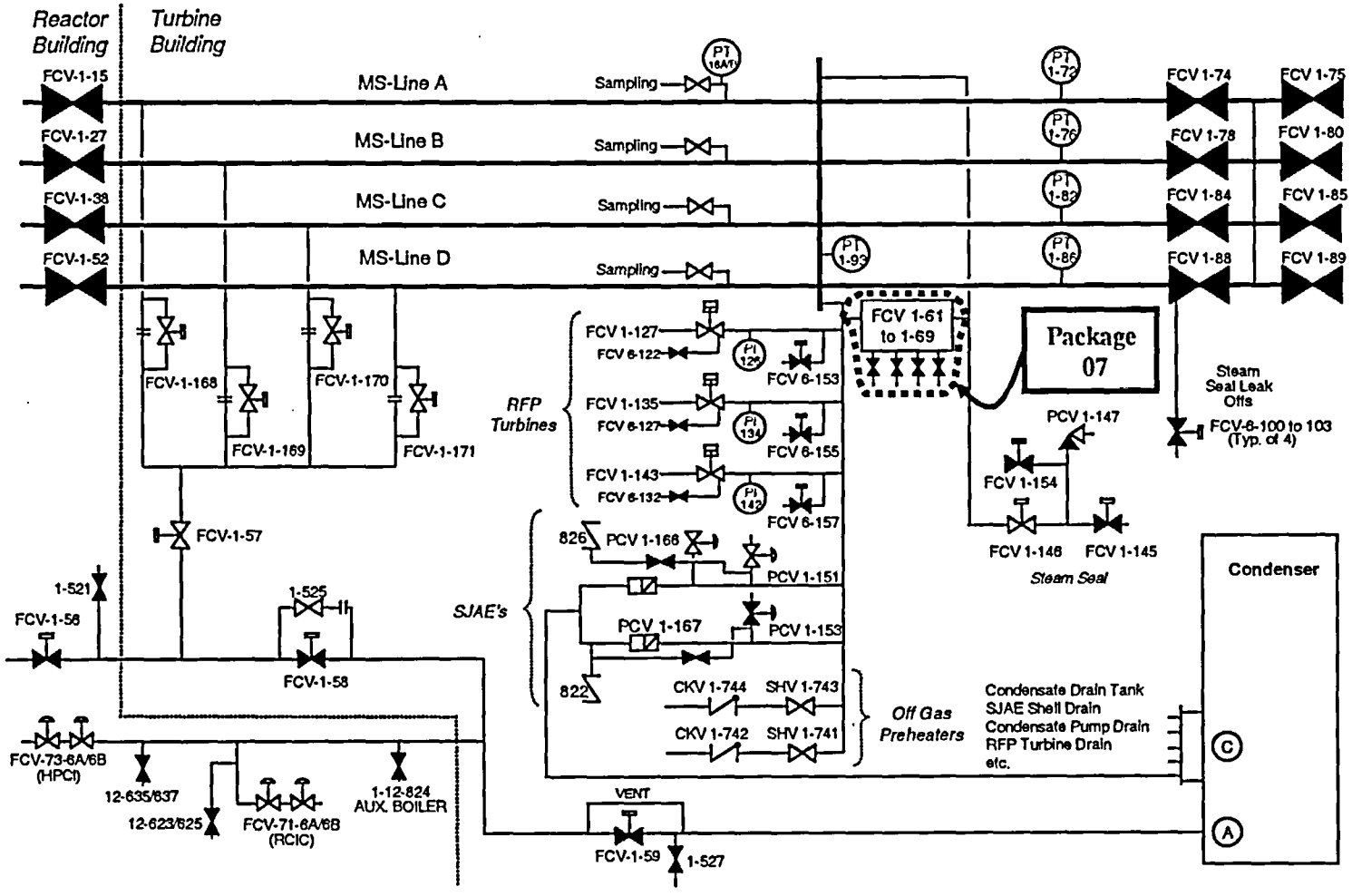

BFN UNIT 1 MSIV SEISMIC VERIFICATION WALKDOWN BOUNDARY

Figure 2-8: BFN Unit 1 MSIV Seismic Walkdown Scope by Subsystems – Package 7

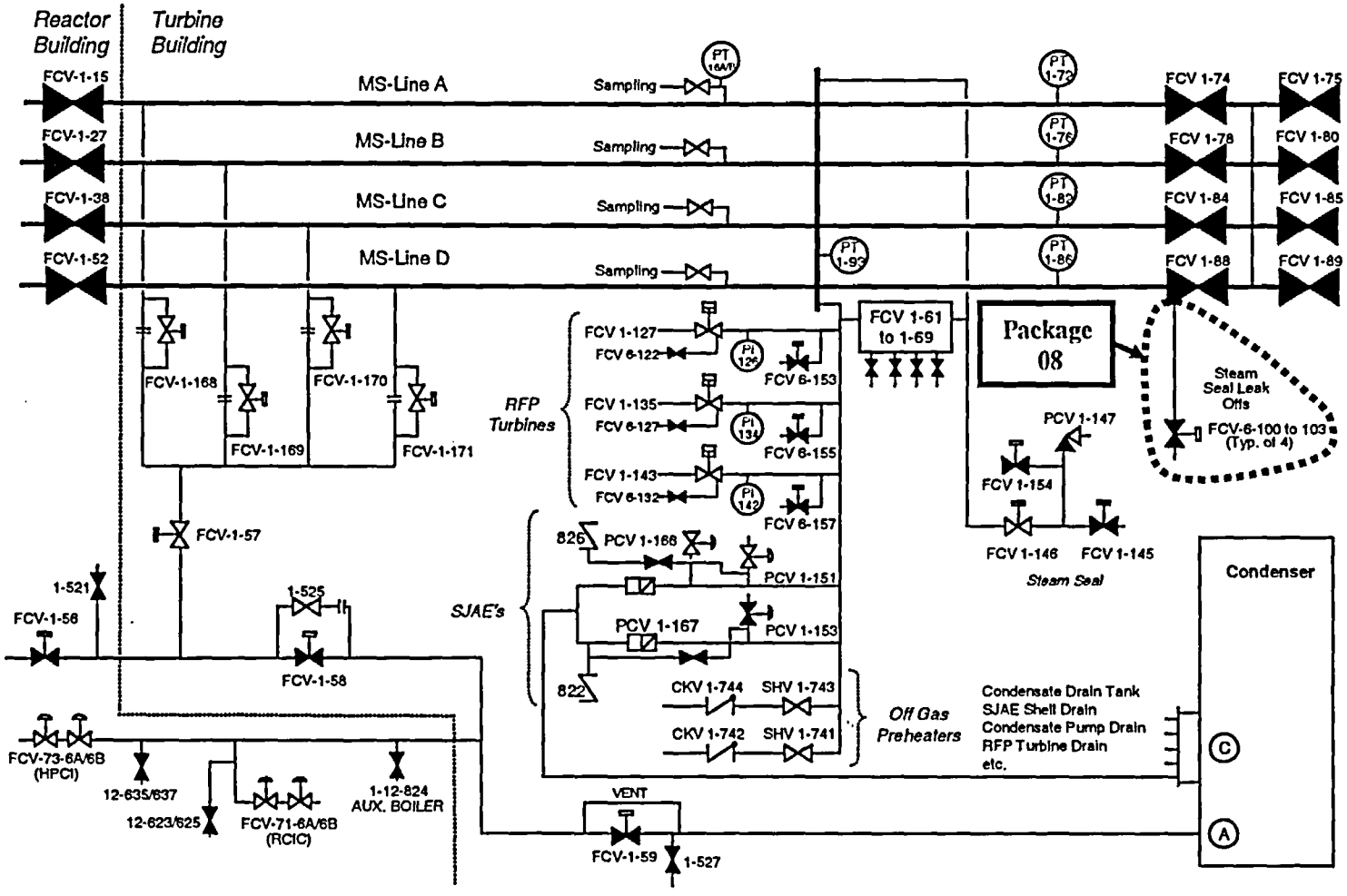

BFN UNIT 1 MSIV SEISMIC VERIFICATION WALKDOWN BOUNDARY

Figure 2-9: BFN Unit 1 MSIV Seismic Walkdown Scope by Subsystems – Package 8

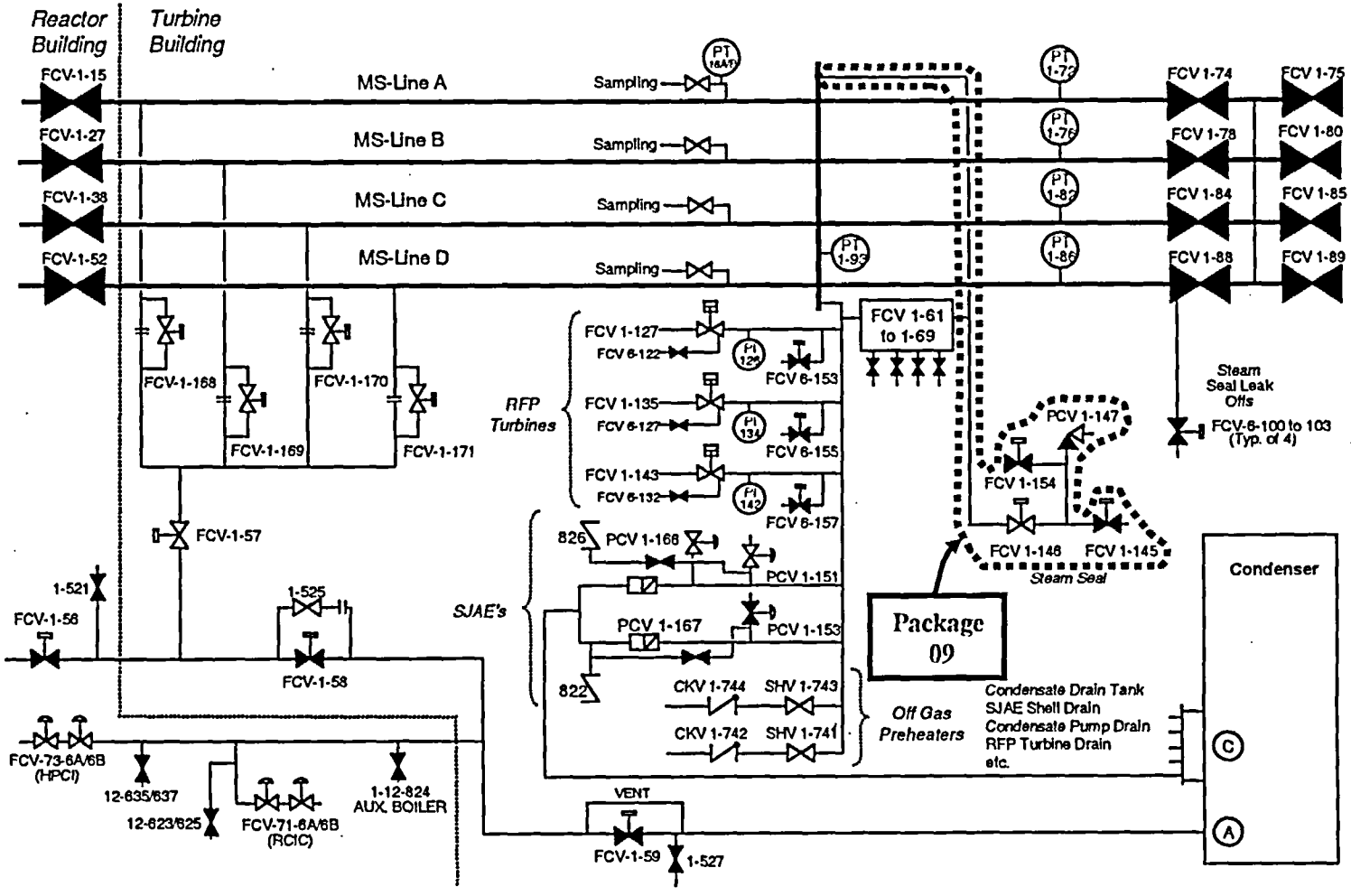

BFN UNIT 1 MSIV SEISMIC VERIFICATION WALKDOWN BOUNDARY

Figure 2-10: BFN Unit 1 MSIV Seismic Walkdown Scope by Subsystems – Package 9

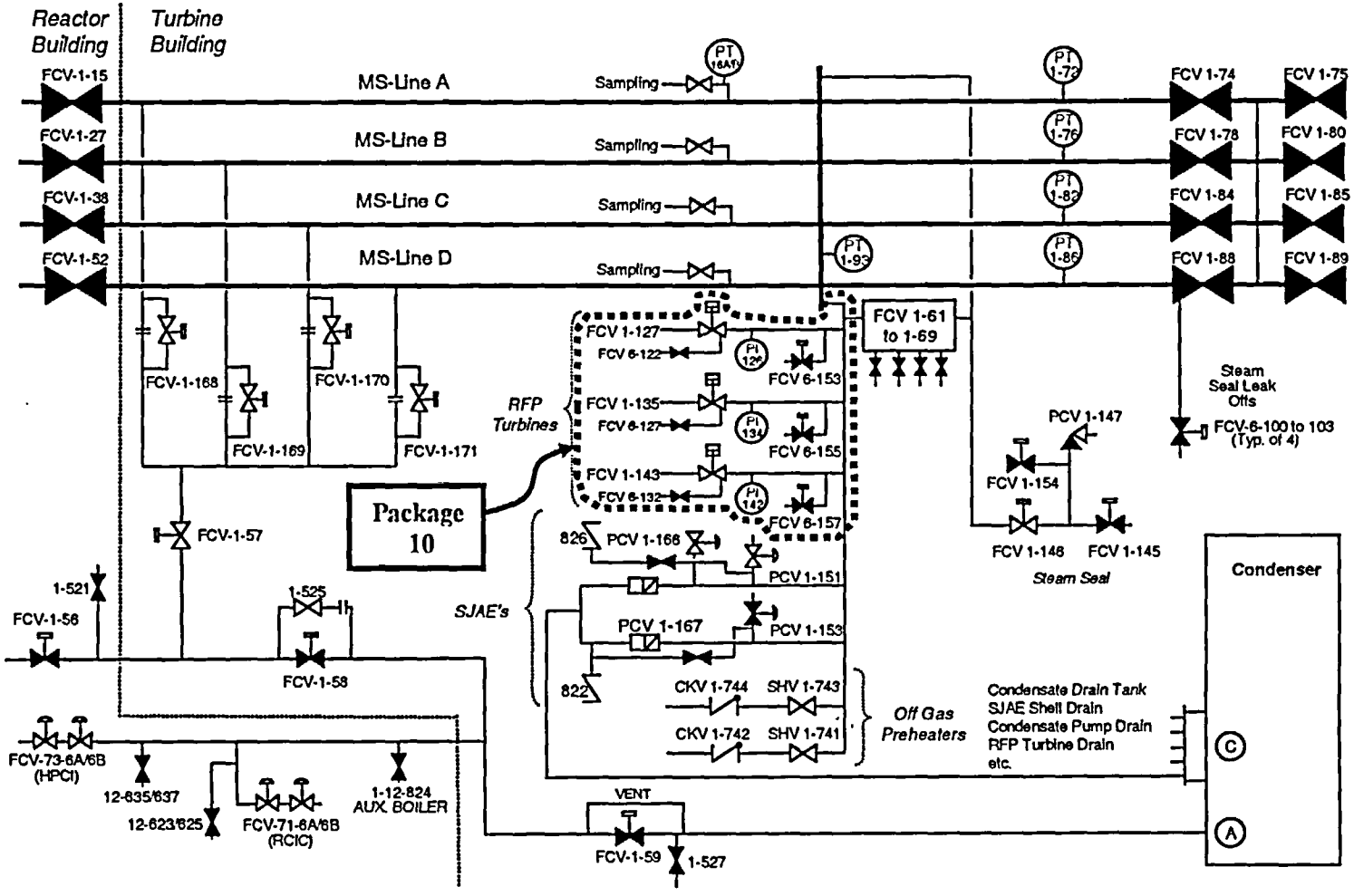

BFN UNIT 1 MSIV SEISMIC VERIFICATION WALKDOWN BOUNDARY

Figure 2-11: BFN Unit 1 MSIV Seismic Walkdown Scope by Subsystems – Package 10

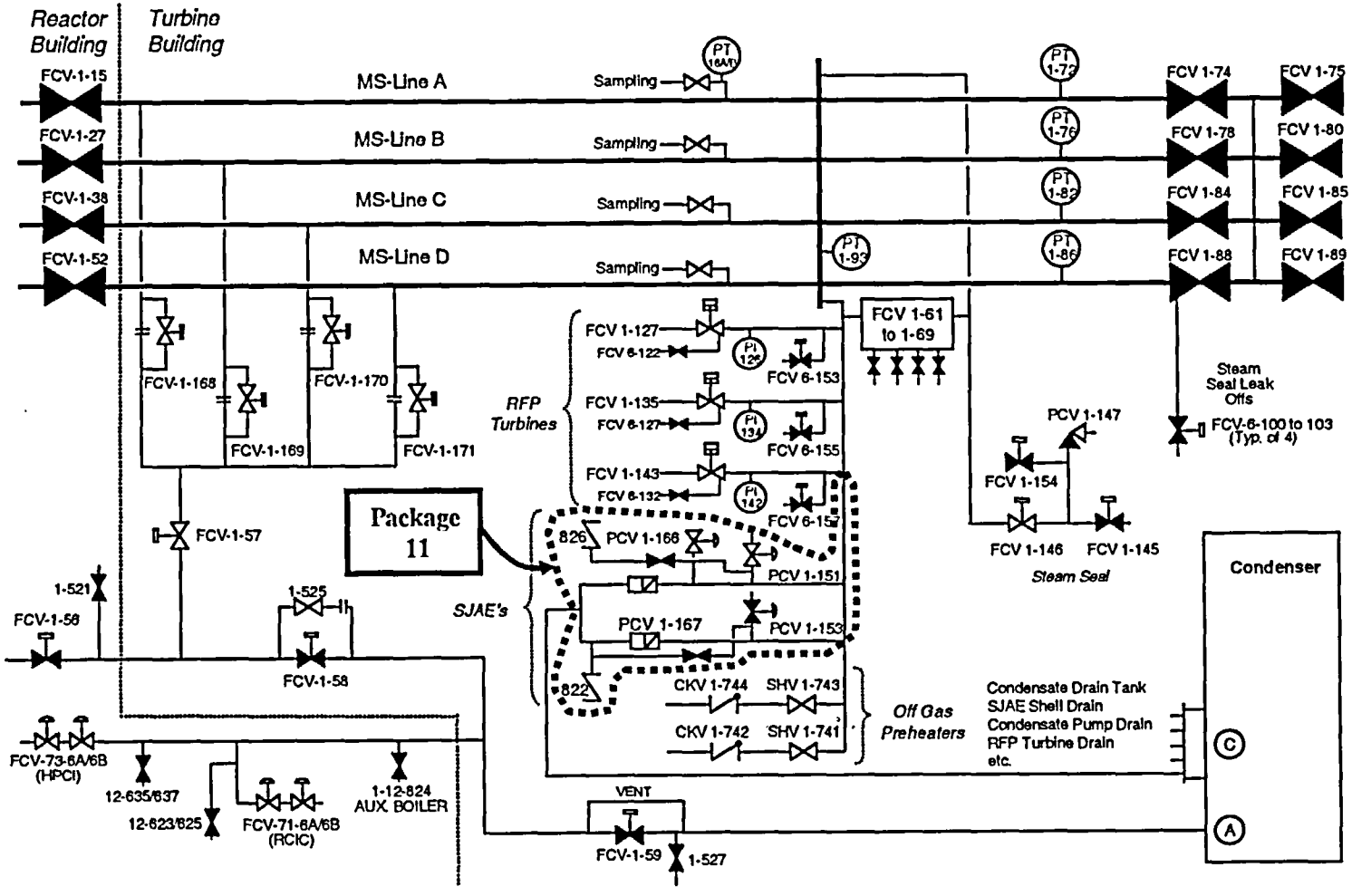

BFN UNIT 1 MSIV SEISMIC VERIFICATION WALKDOWN BOUNDARY

Figure 2-12: BFN Unit 1 MSIV Seismic Walkdown Scope by Subsystems – Package 11

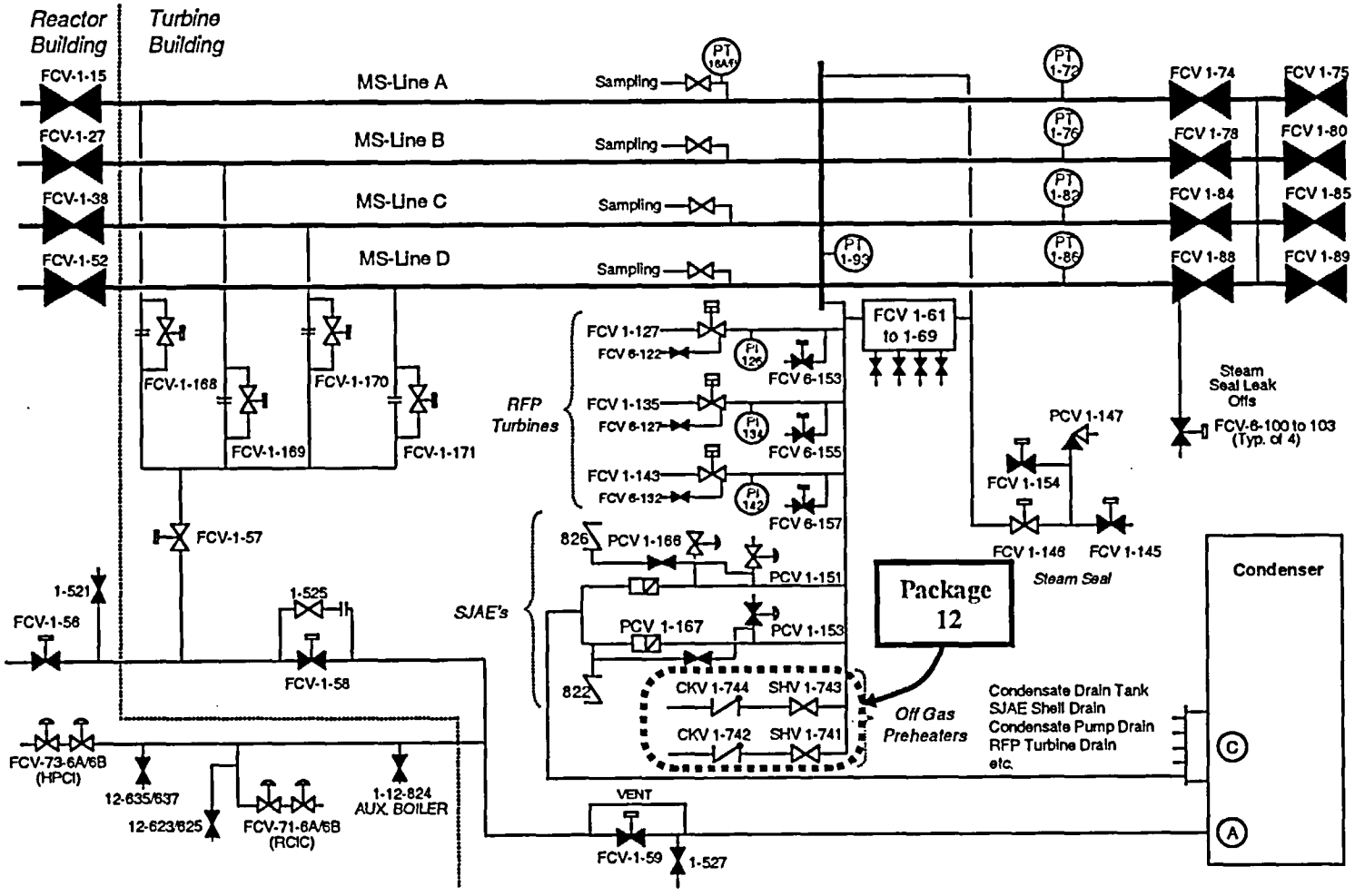

BFN UNIT 1 MSIV SEISMIC VERIFICATION WALKDOWN BOUNDARY

Figure 2-13: BFN Unit 1 MSIV Seismic Walkdown Scope by Subsystems – Package 12

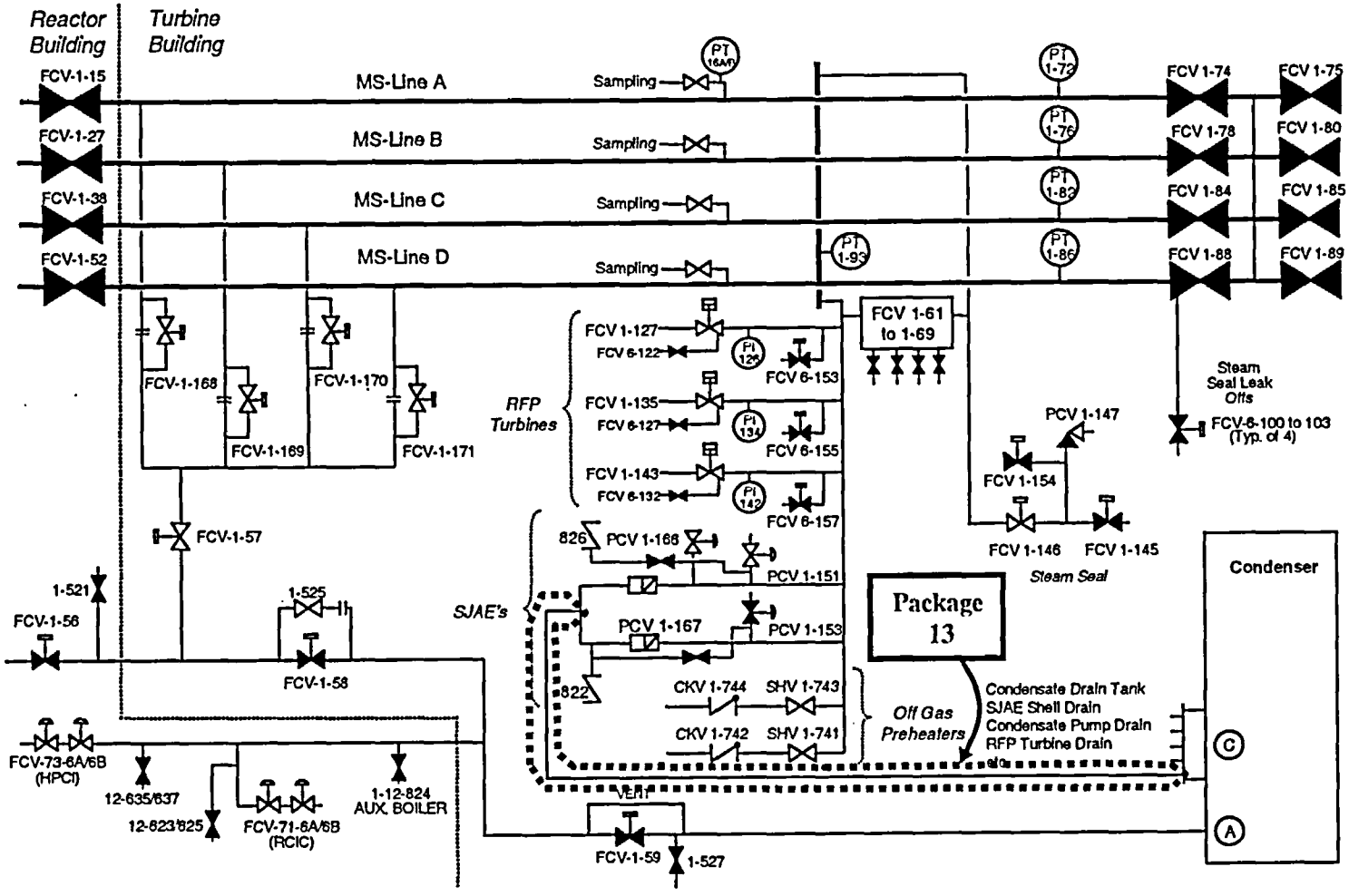

BFN UNIT 1 MSIV SEISMIC VERIFICATION WALKDOWN BOUNDARY

Figure 2-14: BFN Unit 1 MSIV Seismic Walkdown Scope by Subsystems – Package 13

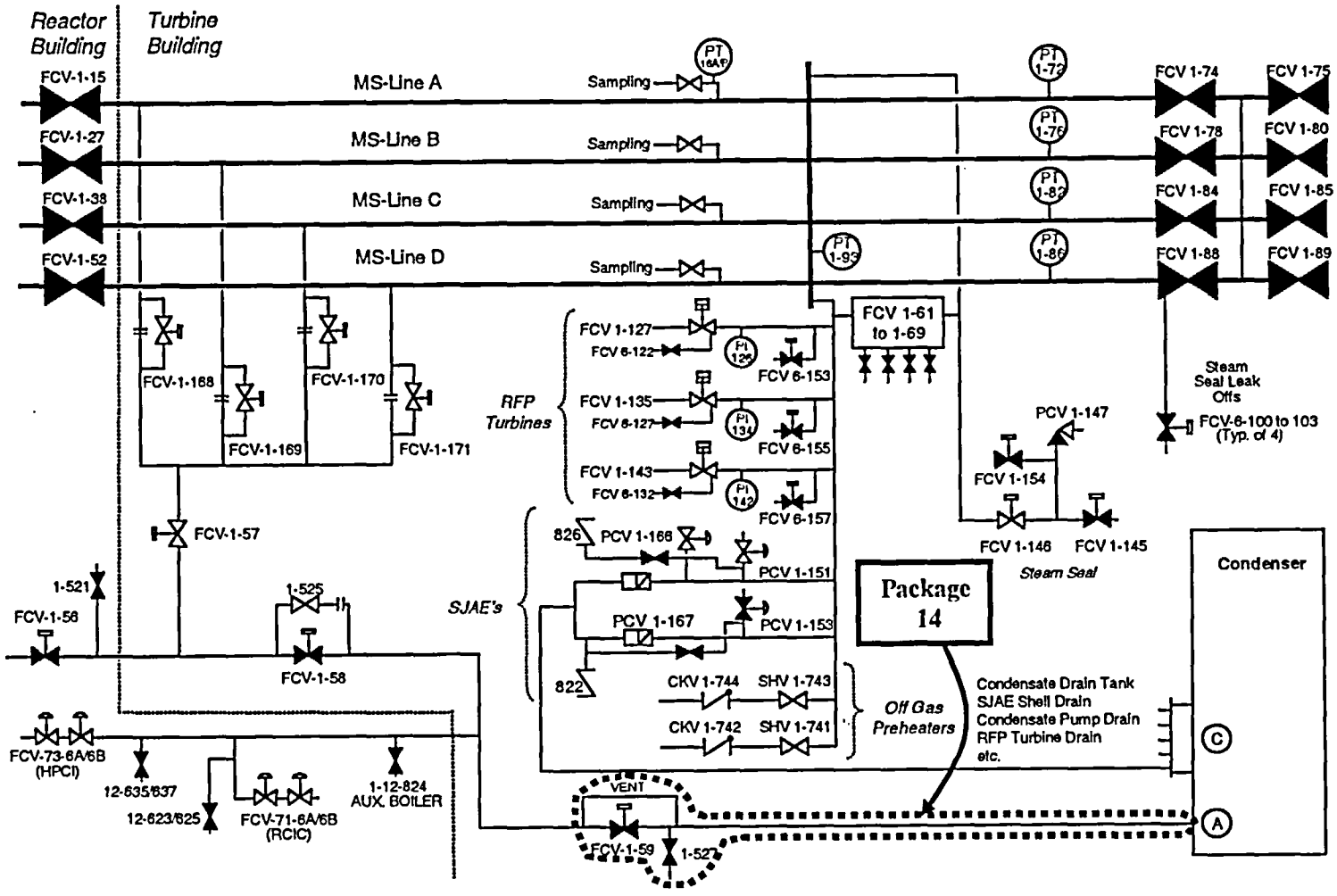

BFN UNIT 1 MSIV SEISMIC VERIFICATION WALKDOWN BOUNDARY

Figure 2-15: BFN Unit 1 MSIV Seismic Walkdown Scope by Subsystems – Package 14

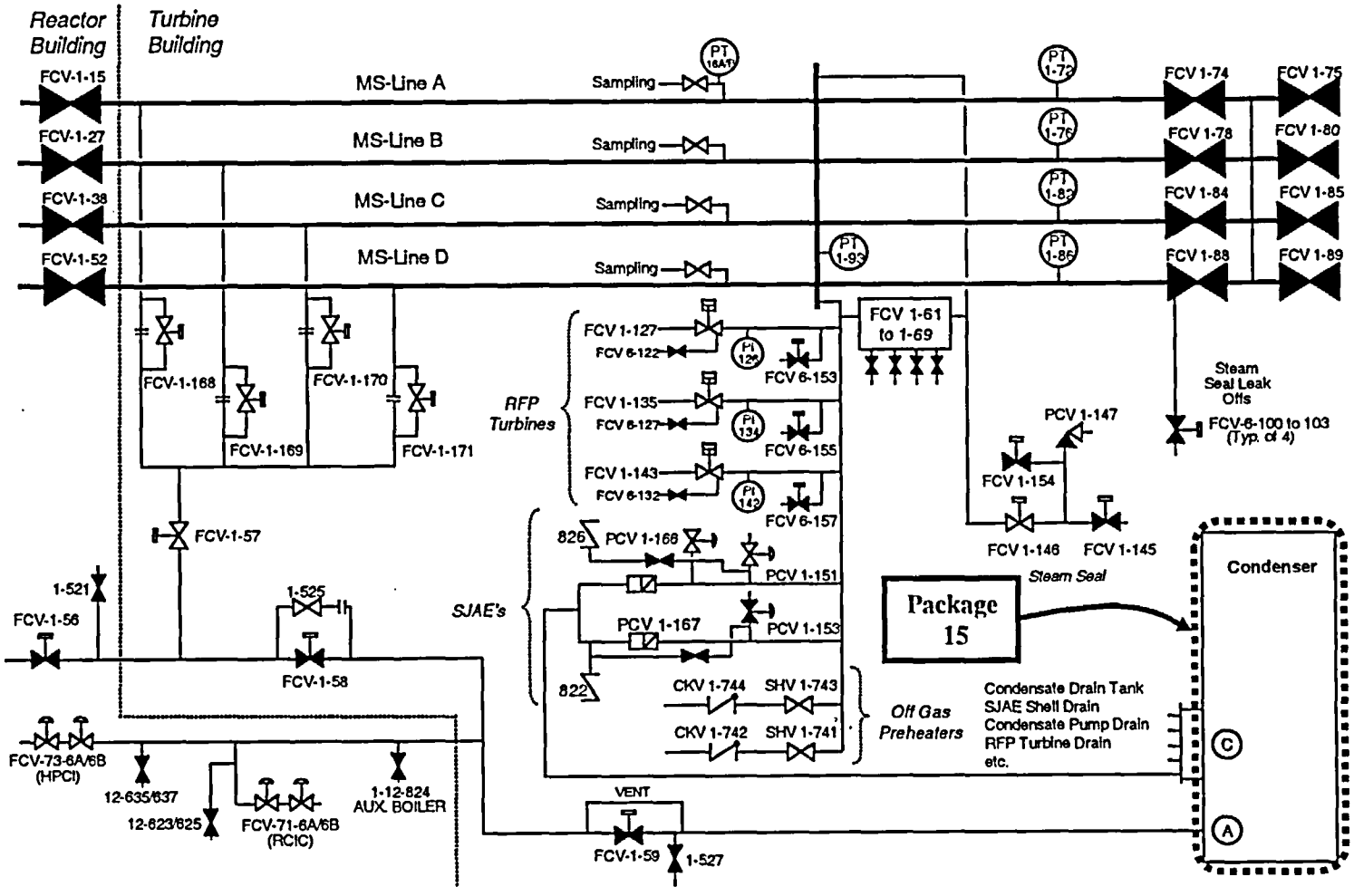

BFN UNIT 1 MSIV SEISMIC VERIFICATION WALKDOWN BOUNDARY

Figure 2-16: BFN Unit 1 MSIV Seismic Walkdown Scope by Subsystems – Package 15

3. SEISMIC VERIFICATION WALKDOWN

Very few components of nuclear plant systems are unique to nuclear facilities. Nuclear plant systems include piping, tubing, conduit, and many other items that are common components of conventional power plants and industrial facilities. Seismic experience data based methods have been developed which address the question of adequacy of seismic performance of equipment and commodities not designed, procured and installed to current nuclear seismic criteria (Reference 7-3). By reviewing the performance of facilities that contain equipment similar to that found in nuclear plants, conclusions can be drawn about the performance of nuclear plant equipment and associated components during and after earthquake events. Extensive work has been performed documenting the performance of power plant equipment and the common sources of seismic damage to equipment and piping (References 7-1, 7-4 and 7-5). These and other similar studies form the basis for the walkdown.

Equipment, piping and tubing systems in the seismic experience data base have performed very well in earthquakes, even though they were typically designed for deadweight and operating loads only, with little or no consideration for seismic loads (Reference 7-5). Earthquake experience data base methods provide the basis for review of the main steam piping and equipment.

The catalog of earthquake experience data on which the walkdown screening evaluation was based includes the El Centro Steam Plant, Valley Steam Plant, Glendale Power Plant, Burbank Power Plant, Humboldt Bay Plant, PALCO Co-generation Plant, Coolwater Plant, Ormond Beach Plant, Moss Landing Steam Plants and several other facilities affected by the 1987 Whittier earthquakes, and the 1992 Cape Mendocino (Humboldt Bay) and Landers-Big Bear earthquakes in California.

A comparison of the selected earthquake experience database site spectra with the Browns Ferry Design Basis Earthquake (DBE) ground spectrum, amplified by 1.6 to account for soil-founded structures such as the Turbine Building, is shown in Figure 3-1. The earthquake experience database plants have experienced strong motions substantially in excess of the soil-amplified Browns Ferry DBE (1.6 x DBE).

Further discussion on the appropriate seismic demand used for Turbine Building is presented in Section 5.1.1. Also, additional details regarding the earthquake experience database plants can be found in Appendix D, Section 4.1, of the BWROG Report GE NEDC-31858P (Reference 7-1).

3.1 Seismic Verification Review Guidelines

Various design attributes of the as-installed scope of equipment, piping, and tubing were reviewed and evaluated by the Seismic Walkdown Teams to insure that the BFN installations are representative of data base design practice and that components are free of known seismic vulnerabilities. Earthquake experience has identified conditions that have resulted in failure of piping and tubing systems and components. The conditions evaluated in this walkdown review included:

- Piping, Pipe Support and Equipment Design Attributes
- Seismic Anchor Motion Issues
- Seismic Interaction Issues (II/I & Proximity)
- Boundary Valve Design Attributes

3.2 Piping, Pipe Support and Equipment Attributes

Earthquake experience data base representation of the piping and tubing systems can be verified by the following design and installation attributes:

- Piping and tubing installations are in conformance with industry-standard practices (e.g., ANSI B31.1 spans for piping, standard industrial supports for piping and tubing).
- Piping or tubing system does not display known seismic vulnerabilities or exhibit seismically sensitive characteristics.

3.2.1 Piping and Pipe Support Design Attributes

The Seismic Walkdown Team reviewed the piping and tubing systems for conditions associated with past poor performance. Support failure in past earthquakes has rarely resulted in piping failure unless multiple supports over long runs fail. Support types which have demonstrated poor seismic performance include:

- One-way bracket or stanchion supports that could allow pipe to slide off the support and fall.
- Supports attached by beam clamps without restraining straps.
- Short threaded rods that are fixed against rotation may be vulnerable to low cycle fatigue.
- Other support integrity issues such as damaged, deteriorated or altered parts that could result in non-ductile behavior or significant weakness in the load path.

Rod hanger attachments that act as pinned members (e.g. clevis, eyes, etc.) and welded structural steel pipe supports have not been observed in seismic events to be vulnerable unless there are major design or construction flaws in their attachment to the supporting structure.

3.2.2 Vulnerable Piping Joints

Threaded piping connections, unsupported bellows or expansion joints and mechanical joints (e.g., mechanical type couplings, bell and spigot joints, etc.) have been observed in past earthquakes to be more vulnerable to seismic loads than welded piping joints. The Seismic Walkdown Team reviewed flexibly supported piping to identify segments which contain weak or brittle joints. Bolted flange connections have performed well and are not considered to be weak or vulnerable to seismic loads.

3.2.3 Other Potential Seismic Vulnerabilities

Other piping and tubing design attributes which are inconsistent with good design practice and which may contribute to poor seismic performance include:

- Piping with dead weight support spacing greatly in excess of ANSI/ ASME B31.1 suggested spans (Reference 7-16). Tubing with excessive sagging or support spans greatly in excess of 6'-0".

- Heavy in-line masses (e.g., valves, accumulators, filters, strainers).

- Piping inadequately restrained adjacent to expansion joints.

- Piping constructed of non-ductile materials such as cast iron or PVC.

- Non-standard fittings, such as mitered elbows or unreinforced branch connections, or unusual attachments that could cause excessive localized stresses.

- Presence of severe corrosion.

Walkdowns reviewed piping and supports to identify designs which contained any of these attributes.

3.3 Equipment Design Attributes

The equipment reviewed in the seismic verification walkdown includes the main condenser and equipment which acts as terminal anchor points for piping and tubing systems. Typical equipment components include heat exchangers, vessels and some measuring instrumentation such as transmitters, and gauges. In general the walkdown review included:

- Review the equipment for known failure modes and sources of seismic damage which may affect the seismic performance of the equipment and sub components.

- Check for unusual or non typical arrangements of the devices within the equipment or of items external to the equipment.

- Assess the anchorage and presence of an adequate load path. For instrumentation, this included evaluation of the instrument rack and/or other terminal equipment.

The details of the review varied according to the type of equipment and location within the plant. The extent of review and information gathering for evaluation of Seismic Verification Boundary components, equipment required for structural integrity, etc. were determined based on the judgment and experience of the Seismic Walkdown Team.

3.4 Anchorage Design Attributes

Anchorage of equipment and supports were reviewed for adequacy on a visual basis. Details of piping and equipment anchorage were documented in the walkdown notes only as required for review of outliers.

3.4.1 Expansion Anchor Bolt Review Guidelines

Visual review of expansion anchor bolts considered the following:

- The concrete appears sound with no significant cracks in the vicinity of the anchor bolt.
- Gaps between the equipment base and the concrete surface were negligible.
- The bolt spacing is greater than about 10 times the bolt diameter.
- The distance between the bolt and any free concrete surface is greater than approximately 10 times the bolt diameter.

3.4.2 Welded Anchorage Review Guidelines

Welded anchorages were reviewed for adequacy, good installation practices and workmanship on a visual basis. This visual review included:

- Review for weld burn-through on thin sections.
- Review of weld thickness, against the thickness of thinner part being connected.
- Review for plug welds subjected to tension loads.

3.5 Seismic Anchor Movement

The experience data base includes instances of seismic damage to piping, tubing and supports that were attributed to seismic anchor movement. Damage was the result of excessive movement of terminal end equipment, differential movement between supports in adjacent buildings, and excessive movements imposed on branch lines by flexible headers. As a result of these observed vulnerabilities, the following attributes were evaluated by the Seismic Walkdown Team during the piping walkdown:

- System configurations at building joints and between buildings were reviewed to insure adequate piping system flexibility to accommodate seismically-induced differential building movement.
- Fittings which can be adversely affected by seismically-induced differential movement (e.g., bellows, etc.) were evaluated for adequate flexibility. This included conditions with rigid connections at multiple structures.
- Piping attached to unanchored or poorly anchored equipment was considered an outlier. Stiff piping attached to flexible equipment was evaluated to verify that the piping will not act as an equipment anchorage.
- Conditions where stiffly supported branch lines were attached to flexibly-supported (e.g., rod-hung) mainlines or headers were identified as outliers. The Seismic Walkdown Team evaluated these configurations for potential damage due to seismically-induced differential movement.

3.6 Seismic Interaction Review (II/I and Proximity)

The seismic interaction review was a visual inspection of structures, piping, or equipment adjacent to the components under evaluation. The seismic interaction review identified seismically induced failures (II/I) and displacements of adjacent structures, piping, or

equipment (proximity) that could adversely affect the required seismic performance of the system and components under consideration.

The Seismic Walkdown Team identified and evaluated all credible and significant interaction hazards in the immediate vicinity of the item being evaluated. Evaluation of interaction effects considered detrimental effects on the capability of equipment and systems to function, taking into account equipment attributes such as mass, size, support configuration, and material hardness in conjunction with the physical relationships of interacting equipment, systems, and structures. In the evaluation of proximity effects involving overhead or adjacent equipment failure and interactions, the effects of intervening structures and equipment which would preclude impact were also considered.

Unusual circumstances and details have led to damaging interaction of plant features during past earthquakes. In the interaction review, the Seismic Walkdown Team looked for unusual impact situations, and lack of proper anchorage or bracing of adjacent equipment. All credible interactions that could affect the required performance of the piping, tubing and equipment reviewed were identified and documented, as appropriate.

3.7 Seismic Verification Boundary Valves

Screening guidelines are provided for valves which are either relied upon to establish, or are within the Seismic Verification Boundary. The guidelines are consistent with the SQUG Generic Implementation Procedure (GIP, Reference 7-3) and include provisions for air-operated diaphragm valves, spring-operated pressure relief valves and piston-operated valves of light-weight construction. Screening guidelines for motor-operated valves and substantial piston-operated valves are also provided. Evaluation of valves included review of power and control utilities to insure adequate slack is provided to accommodate anticipated seismic motions. Supports located on the valve operator were reviewed to insure that they were accompanied by supports on the valve body or piping adjacent to the valve body. Reviews were also performed to insure that the valve body and operator were supported by a common structure to prevent differential displacement. Piping or tubing less than 1-inch in diameter with in-line eccentric masses such as motor or air operated valves were checked for support at or near the valve.

3.8 Walkdown

BFN-1 MSIV seismic ruggedness verification boundary was divided into 15 subsystems or portions for walkdown purposes (see Section 2.2 above). Seismic verification walkdown of the main steam lines, various drain paths, and associated components and appendages within the Seismic Verification Boundary were conducted as part of BFN Unit 1 restart project, and were performed by Seismic Walkdown Teams consisted of Messrs. John O. Dizon, Stephen J. Eder, Robert D. Hookway and Michael W. Whited of ***FACILITY RISK CONSULTANTS, Inc.*** All of the MSIV Seismic Verification Walkdown Team members are degreed engineers; each has over ten to twenty years of experience in structural or mechanical engineering and/or earthquake engineering application to nuclear power plants, and is familiar with the earthquake experience methodology.

The above engineers have performed complete MSIV Seismic Verification Walkdowns in accordance with the recommendations of the BWROG Report GE NEDC-31858P at several other plants, including BFN Units 2 and 3.

3.9 Documentation

The seismic verification walkdowns and evaluations were performed in accordance with applicable Walkdown Instruction WI-BFN-0-CEB-07 (References 7-6), and following the guidelines contained in the BWROG Report GE NEDC-31858P (References 7-1). Screening evaluation guidelines were based on TVA Design Criteria BFN-50-C-7306 (References 7-7) for Class II piping and components. Walkdown evaluations utilized existing plant documentation, as available, including:

- Systems flow diagrams or P&ID's identifying piping and equipment within the verification review boundaries;
- Piping isometric drawings;
- Piping support sketches and piping layout drawings, as needed;

- In-plant screening tools such as piping deflection charts, pipe flexibility charts, standard support hardware capacities, anchorage capacities, and others (Reference 7-8), as applicable;

- Walkdown and evaluation results from previous MSIV seismic ruggedness programs conducted for BFN Units 2 and 3 (References 7-9 and 7-10).

The walkdown review of piping and supports was primarily visual for qualitative attributes of the systems. Only physical system attributes which could be visually verified with available access, and without system disassembly were reviewed. Where indicated, additional details of the system design, installation and construction were collected and are documented on piping isometrics and in walkdown field notes, as appropriate.

Conditions which did not conform to the walkdown screening guidelines or which were judged by the Seismic Walkdown Team to require further review were identified and documented as potential outliers in the Potential Outlier Sheet (POS). Some photographs were taken for informational use in subsequent evaluation phases of the project.

Results of the walkdown for each of the 15 portions or subsystems within the BFN-1 MSIV seismic verification boundary are documented in the respective walkdown data package (WDP). A listing of the walkdown data packages with unique identifier number can be found in Appendix A of this report.

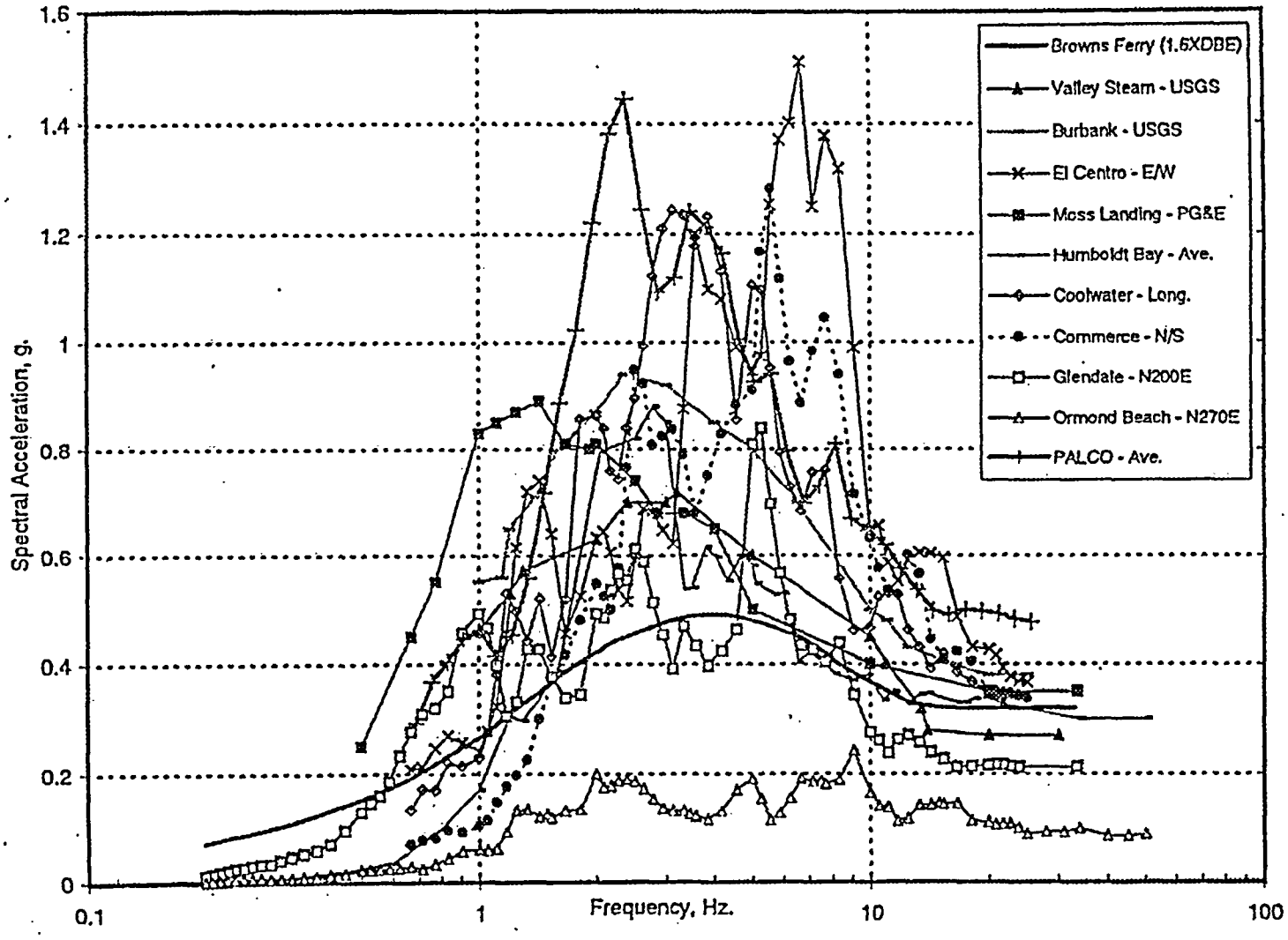

Figure 3-1 Comparisons of Database Site Spectra to Browns Ferry Design Basis Ground Spectrum

4. WALKDOWN OPEN ITEMS

Screening walkdown evaluations for the 15 subsystems or portions included in the BFN-1 MSIV Seismic Verification Boundary were performed in accordance with Walkdown Instruction WI-BFN-0-CEB-07 (Reference 7-6). Screening evaluations focused on certain key attributes of the associated piping and components, as discussed earlier in Chapter 3, to ensure pressure boundary integrity. Available screening tools (see Reference 7-8) such as seismic deflection estimates and charts for various plant features, pipe flexibility and seismic anchor movement evaluation charts, support and anchorage capacity screening charts, and others, that are developed based on the TVA Design Criteria BFN-50-C-7306 (Reference 7-7) were utilized during the walkdowns.

Results of in-plant screening walkdown evaluations for the 15 subsystems included in the MSIV seismic boundary are documented in details in the respective walkdown data packages (WDP's). Conditions which did not conform to the walkdown screening guidelines or which were judged by the Seismic Walkdown Team to require further review were identified and documented as potential outliers in the Potential Outlier Sheet (POS) which are also included in the WDP's. A listing of the walkdown data packages with unique identifier number can be found in Appendix A of this report.

The following sections provide a brief discussion of the walkdown evaluations and identified open items or potential outliers associated with each of the 15 subsystems.

4.1 Main Steam Drain Line – Turbine Bldg. Main Steam Tunnel (Pkg. 01)

The Main Steam Drain Line, which is the primary MSIV leakage drain path, originates in the Reactor Building MSIV Vault (Package 03, Section 4.3) and continues through the Turbine Building Main Steam Tunnel (Package 01, this section). The drain then enters a guard pipe which is embedded below the slab and crosses below the gap between the Steam Tunnel and the Turbine Pedestal Structure, continues into the Turbine Structure and terminates at the main condenser (Package 14, Section 4.14). The Main Steam Drain Line also has a 4-inch diameter vent line that begins in the Turbine Building Main Steam Tunnel, rises up to Elevation 593' and continues through the Turbine Structure to the south end of Condenser A where it runs down to rejoin the Main Steam Drain Line

before it enters the condenser (also included in Package 14). The lines are shown on Flow Diagram 1-47E801-1.

The portion of piping in this package included the Main Steam drain lines in the Turbine Building Steam Tunnel on Elevation 565', i.e., from the blowout panels at column line N to just north of column line K. Several potential outliers were identified, as listed below:

Subsystem Description	POS #	Description of Potential Outlier Condition
Main Steam Drain Taps	1-1	Flexibility concerns associated with the MS lines and Drains.
MOV 's 1-FCV-1-57 & 1-FCV-1-58	1-2	Excessive mass and extended valve operators.
Main Steam and HPCI Drains	1-3	Flexibility concerns associated with the MS and HPCI Drains.
Main Steam Bypass Drain	1-4	Proximity interaction concerns between bypass line and adjacent 2-way support.

4.2 Main Steam – Turbine Building (Package 02)

This package includes the four Main Steam Lines (A, B, C & D) inside the Turbine Building that penetrate from the blowout panels at column line N and terminate at the Main Steam Stop Valves 1-FCV-1-74, -78, -84 and -88, which are considered as seismic boundary valves. These lines are shown on Flow Diagrams 1-47E801-1 and 1-47E801-2. The Main Steam lines come from the outboard MSIV's and are anchored downstream inside the Reactor Building MSIV vault. These lines are vertically supported by variable springs along their length until the Stop Valves, which are supported by vertical struts.

Two (2) potential outliers were identified and are listed below:

Subsystem Description	POS #	Description of Potential Outlier Condition
MS Balancing Header	2-1	Upper pipe clamp nut is missing.
MS Turbine Stop/Control Valves	2-2	MS Stop/Control Valves are not covered in the valve screening criteria, thus, seismic adequacy of these valves needs to be verified.

4.3 Main Steam Drain Line – Reactor Building Main Steam Vault (Pkg. 03)

Included in this package are the four Main Steam Lines which originate at the containment penetrations and run to the outboard MSIV's 1-FCV-1-15, -27, -38 and -52, which are considered as seismic boundary valves. The Main Steam Lines then run to anchors (one for each line) embedded in a reinforced concrete wall. The lines continue through the MSIV Vault and enter the Turbine Building through the blowout panel wall. The Main Steam Piping is shown on Flow Diagram 1-47E801-1. The Main Steam Lines in the MSIV Vault are seismically analyzed from the containment penetrations to the anchors in the concrete wall, which are also the only supports for the lines. The Main Steam lines beyond the anchors were found to be seismically adequate. The only potential outlier identified during the walkdown relates to the seismic adequacy of the MSIV's (not bounded by seismic experience data).

Also included in this package is a single 3-inch diameter steam drain that runs from its containment penetration through an anchor and to the normally closed outboard containment isolation valve for Primary Containment steam drains, 1-FCV-1-56, which is a seismic boundary valve. The piping continues through the Reactor Building MSIV Vault and exits to the Turbine Building through the blowout panel wall at the north end of the Vault (Package 04, Section 4.4). This drain line is shown on Flow Diagram 1-47E801-1. This drain line was found to be seismically adequate.

In the Reactor Building MSIV Vault, the 3-inch diameter drain line is primarily supported on stanchion supports that provide only vertical restraint and are detailed to accommodate thermal growth of the piping. Piping and supports in this area are considered to be acceptable. Valve 1-FCV-1-56 was identified as a potential outlier due to its extended valve operator not meeting the screening criteria for operator height.

Subsystem Description	POS #	Description of Potential Outlier Condition
MSIV 's 1-FCV-1-15, -27, -38 & -52	3-1	MSIV 's are not covered in the valve screening criteria, thus, seismic adequacy of these valves needs to be verified.
MOV 1-FCV-1-56	3-2	Excessive mass and extended valve operators.

4.4 HPCI/RCIC/Aux. Boiler Drains (Package 04)

HPCI and RCIC Steam Drains route steam leakage from the HPCI and RCIC Steam Supply Lines to the Main Steam Drain Line in the Turbine Building Steam Tunnel. These line segments are shown on Flow Diagrams 1-47E812-1, 1-47E813-1, and 1-47E801-1. The RCIC Steam Drain Line originates in the Northwest corner room of the Reactor Building (Boundary valve 1-FCV-071-06B) and is routed over the top of the Torus to its connection into the HPCI Steam Drain Line just below the penetration through the floor into the MSIV Vault. The HPCI Steam Drain Line starts in the HPCI room (Boundary valve 1-FCV-073-06B) and is routed above the Torus to the point where it penetrates the floor into the MSIV Vault. Both drains have branches near their points of origin that lead from Auxiliary Boiler Drain piping. The Auxiliary Boiler piping is shown on Flow Diagrams 0-47E815-1 and 1-47E815-3. The normally closed manual isolation valves (1-12-824, 1-12-635/637 and 1-12-623/625) that serve as the seismic verification boundary for the Auxiliary Boiler drains are located in the HPCI room and the Northwest corner room of the Reactor Building. These drain lines were found to be generally well supported in these areas.

From the penetration above the Torus through the floor of the Reactor Building MSIV Vault, the HPCI piping is routed through the MSIV Vault and into the Turbine Building Steam Tunnel through the blowout panels. The HPCI Steam Drain continues alongside the Main Steam Drain to the point where it connects with the Main Steam Drain between valves 1-FCV-1-58 and -59. The HPCI piping is supported throughout the MSIV Vault and the Turbine Building Steam Tunnel on floor-mounted, custom-fabricated supports which act as horizontal and vertical rigid restraints and are detailed to accommodate thermal growth of the piping.

Several potential outliers were identified on these drain lines. Conditions include pipe overspan, support deficiencies, proximity interactions and piping flexibility issues, as listed below:

Subsystem Description	POS #	Description of Potential Outlier Condition
RCIC Drain	4-1	Excessive pipe overspan condition.
RCIC Drain	4-2	Pipe support with questionable capacity.
Aux. Steam Boiler Drain	4-3	Missing rod hanger hardware (eye nut).

HPCI Drain	4-4	Multiple pipe overspan conditions on the 1"ø drain line.
HPCI Line	4-5	Multiple pipe overspan conditions on the 2"ø line.
HPCI Line and Valve 1-73-222	4-6	Proximity interaction of the 2"ø HPCI line and the valve.
HPCI Drain	4-7	Several floor-mounted supports were noted to be damaged (potentially due to thermal effects). Also, anchor bolt spacing violations on these typical supports.
HPCI Drain	4-8	Flexibility concern on 2"ø HPCI line due to differential displacement between RB and TB

4.5 Main Steam Pressure Transmitters PT 1-72, 76, 82, 86 & 93 (Pkg. 05)

The Main Steam Pressure Transmitters which tap off from the four Main Steam Lines upstream from the Main Steam Manifold (Balancing Header) and downstream from the Stop Valves are shown on Flow Diagram 1-47E801-2. The instrument lines to the pressure transmitters are routed on 1/2-inch diameter stainless steel piping from the pipe taps off the Main Steam Lines and the Manifold passing under the steel grating at Elevation 606'-3" in the Turbine Building to a penetration through the south wall of the area. The piping then runs to Instrument Racks 1-25-112 and 1-25-113C located on the south corridor of the Turbine Building at Elevation 586'.

Support configurations underneath the steel grating are generally rigid, consisting of strut channel welded to the underside of the grating beams. As such, several potential outliers were identified on these lines, mainly due to the limited flexibility in the piping and support configuration to accommodate the Main Steam header movements, as evidenced from the loose or missing clamps on the existing strut channel supports, broken overhead welds, and bent pipes noted during the walkdown. The identified potential outliers are tabulated below.

Subsystem Description	POS #	Description of Potential Outlier Condition
SS Piping to 1-PT-1-72 & -76	5-1	Overspan conditions for both lines. Also, flexibility issue exists on piping to 1-PT-1-72.
SS Piping to 1-PT-1-82	5-2	Overspan conditions due to broken weld on the support and missing clamps.
SS Piping to 1-PT-1-86	5-3	Overspan conditions due to broken weld on the support and loose clamp.
SS Piping to 1-PT-1-86	5-4	Flexibility concern on ½"ø piping.

SS Piping to PT 1-93	5-5	Overspan condition due to broken support.
SS Piping to PT 1-93	5-6	Flexibility concern on ½"ø piping along the wall.

4.6 Main Steam Sample Lines to Sampling Station (Package 06)

The Main Steam Sample Lines tap off from each of the four Main Steam Lines upstream of the Main Steam Stop Valves. The lines are shown on Flow Diagram 1-47E801-1 and Mechanical Control Diagram 1-47E610-43-1. The sample lines begin as a 1-inch diameter piping and transition to one-half-inch diameter tubing. The tubing is routed through the Turbine Building and exits the area through the south wall to Instrument Rack 1-25-149 in the Turbine Building south corridor, Elevation 586'. On the rack, the four tubes connect into a single tube with three branches. Seismic verification boundary valves 1-43-631 and 1-43-631A terminate two of the branches on the rack. One one-quarter-inch diameter tube runs from the rack through the constant temperature bath and on to the grab sample station and normally closed valve 1-43-632. The tubing is typically supported with tubing clamps attached to strut channels mounted to the wall.

Also included in this package are the Pressure Sensing lines for PT-16A and B which tap off from the 1-inch diameter piping taps for the Steam Line A sample lines. This piping transitions to tubing and runs west into the Turbine Lube Oil Pump area. The transmitters are attached to wall-mounted steel plate bracket supports and are enclosed by a mesh cage. The tubing lines are adequately supported using U-bolts and fabricated steel angle brackets mounted to the wall with expansion anchors.

Four (4) potential outliers were identified which include unanchored terminal equipment, broken support potentially due to inadequate pipe flexibility, and support hardware deficiencies. These potential outliers are tabulated below.

Subsystem Description	POS #	Description of Potential Outlier Condition
Sample Line A	6-1	Missing tubing clamp.
Sample Station	6-2	Unanchored constant temperature bath cabinet.
Sample Line A to 1-PT-1-16A/B	6-3	Flexibility concerns on sample lines to 1-PT-1-16A/B, involving broken support.
Sample Line A to 1-PT-1-16A/B	6-4	Missing nuts on U-bolt support.

4.7 Main Steam Bypass (Package 07)

The Main Steam Bypass Valve Chest is located on a loop from the Main Steam Header upstream of the Stop Valves. The Bypass Valves and piping are shown on Flow Diagram 1-47E801-2. This package includes only the portion of Main Steam piping from the Main Steam Manifold to and including the Bypass Valve chest assembly which is a seismic boundary valve (1-FCV-1-61 to -69). The bypass valve chest is supported with trapeze spring hangers on each end of the valve assembly. An outlier pertaining to the seismic adequacy of the Main Steam Bypass Valve was identified, as listed below.

Subsystem Description	POS #	Description of Potential Outlier Condition
MS Bypass Valve Assembly	7-1	MS Bypass valve chest is not covered in the valve screening criteria, thus, its seismic adequacy needs to be verified.

4.8 Main Steam Stop Valve Above Seat Drains (Package 08)

The 1-inch diameter Main Steam Stop Valve Above Seat Drains originate at each of the four stop valves and are shown on Flow Diagram 1-47E807-1. The drains run down through the stop valve platform grating at Elevation 601'-6" and continue east to the four verification boundary valves (1-FCV-6-100 through -103) under the east end of the platform. The piping is typically supported with rod hangers attached from steel angle members welded to the platform steel. The verification boundary valves have operators which are independently supported by rod hangers to the platform supporting beam.

Several potential outliers were identified for this system; one has to do with proximity interaction concern and the rest are maintenance items. The potential outliers are tabulated below.

Subsystem Description	POS #	Description of Potential Outlier Condition
1-FCV-6-101, -102 & -103	8-1	Proximity interactions of valve yokes and beam.
SV-D Above Seat Drain Piping	8-2	Broken pipe strap on support.
1-FCV-6-100	8-3	Broken flex conduit connection to operator.

4.9 Main Steam to Steam Seal Regulator (Package 09)

Steam is taken from the west side of the Manifold between the Stop and Bypass valves and routed to the Steam Seal Feed valves. The line is shown on Flow Diagrams 1-47E801-2 and 1-47E807-2. This package includes the 4-inch diameter steam line off the Manifold to the air operated pressure control/relief valve 1-PCV-1-147 (Steam Seal Regulator) and the normally closed motor operated isolation valves 1-FCV-1-145 (Steam Seal Bypass Valve) and 1-FCV-1-154 (Aux. Steam Isolation Valve) which are all considered as seismic boundary valves. Air instrumentation line for valve 1-PCV-1-147 routed to Panel 1-25-102 located along the west corridor wall at Elevation 617' of the Turbine Building is also included in this package.

Several potential outliers were identified during the walkdown of this system, including valve performance issues, piping overspan, pipe flexibility and falling interaction concerns. The potential outliers are listed below.

Subsystem Description	POS #	Description of Potential Outlier Condition
Main Steam to 1-FCV-1-146	9-1	Overspan condition on the 4"ø MS line to the supply to steam seal MOV 1-FCV-1-146.
Main Steam to 1-FCV-1-146	9-2	Loose rod hanger eye nuts and disengaged rod.
1-PCV-1-147 Air Tubing	9-3	Inadequate flexibility for air line connected to the top of valve.
1-PCV-1-147 Instrumentation	9-4	Falling interaction concern from nearby block wall at El. 617'.
1-PCV-1-147	9-5	Extended valve operator.
1-FCV-1-146, -145 & -154	9-6	Extended valve operator, and substantial operator weight.

4.10 Steam Supply to RFP Turbines (Package 10)

Steam is taken from the east side of the Manifold between the Stop and Bypass valves and routed to the turbine drives for the Reactor Feed Pumps at Elevation 617'. The lines are shown on Flow Diagrams 1-47E801-2 and 1-47E807-2. The 6-inch pipe runs below the turbine operating deck from the Main Steam line and penetrates up through the turbine deck (El. 617') where it branches to 4-inch diameter and into the RFP rooms (A, B & C). The line reduces to 3-inch diameter and continues back down through the turbine deck floor penetration to the SJAE's (Package 11, Section 4.11) and Off-Gas Preheaters

(Package 12, Section 4.12). The line is typically supported on one-way stanchion supports which are susceptible to sliding off the supports during a DBE seismic event.

The 4-inch branch lines that enter into the RFP rooms terminate at the respective RFP Turbine HP Stop Valves, 1-FCV-6-127, -135 and -143 (RFP-A, -B and -C), which are seismic boundary valves. In addition, HP Stop Valve Above Seat Drain Valves 1-FCV-6-122, -127 and -132, as well as HP Steam Isolation Valves 1-FCV-6-153, -155 & -157 are also considered as seismic boundary valves. Instrument tubing to Panels 1-25-100A and 1-25-101B located on the turbine deck are also included in this package.

As such, several supports on the line were identified as potential outliers for further evaluation of the as-installed configuration. Other potential outliers identified include piping overspan, large in-line masses, and seismic interaction concerns. Potential outliers for this system are tabulated below.

Subsystem Description	POS #	Description of Potential Outlier Condition
Steam Supply Line	10-1	Stanchion supports for the steam supply header at El. 617 ' (Total of 6). 1 support for the 6"ø line near H/T4; 2 supports for the 3"ø line near D/T4; and 1 support for each of the 4"ø branch line to RFP Turbine compartments.
Steam Supply Line	10-2	Turbine Bldg. overhead crane.
RFP Stop Valve Above Seat Drains	10-3	Valve operators with large eccentric mass on ½"ø and ¾"ø lines.
Tubing to PI 1-134	10-4	Missing or broken clamps (2 places) on tubing to PI 1-134. Also, tubing is bent and sagging.
Steam Supply Line	10-5	Missing nut on rod hanger support.
Steam Supply Line	10-6	Overspan conditions on the 6"ø steam supply line.

4.11 Steam Supply to Steam Jet Air Ejectors (Package 11)

The Steam Supply line to the Steam Jet Air Ejectors (SJAE's) is shown on Flow Diagram 1-47E801-2. The portions of piping included in this package begin with the 3-inch Steam Supply line that drops from the turbine deck floor penetration near column lines T3 and D (past RFP rooms, refer to Section 4.10 above), runs north along the Off-Gas pipe chase,

branches eastward into the SJAE rooms and terminate at the seismic boundary valves 1-PCV-1-151 & -166 in SJAE Room A and 1-PCV-1-153 & -167 in SJAE Room B.

Potential outliers identified for this package, consist of mainly piping overspan on 1-inch diameter steam drains, are listed below.

Subsystem Description	POS #	Description of Potential Outlier Condition
SJAE 's 1A & 1B	11-1	Need to verify the seismic adequacy of SJAE anchorage.
MOV 1-FCV-6-114	11-2	Broken flex conduit connection to valve motor operator.
MS Supply to SJAE's	11-3	Overspan condition on the 3"ø supply line.
MS Supply Drain at SJAE 1B	11-4	Overspan condition on the 1"ø steam supply drain line downstream of 1-FCV-1-114.
Steam Trap Drain at SJAE 1A	11-5	Overspan condition on the 1"ø steam trap drain between 1-FCV-1-172 and 1-PCV-1-166.
Steam Trap Drain at SJAE 1B	11-6	Overspan condition on the 1"ø steam trap drain between 1-FCV-1-173 and 1-PCV-1-167.

4.12 Steam Supply to Off-Gas Preheaters (Package 12)

The Steam Supply line to the Off-Gas Preaheaters is also shown on Flow Diagram 1-47E801-2, and is a continuation of the same steam supply line from RFP's and SJAE's above. The portion of piping included in this package consists of the 2-inch diameter line (reduced from the 3-inch diameter past the SJAE's) along the Off-Gas pipe chase and enters eastward into the Off-Gas room through a masonry block wall. It is to be noted that new manual isolation valves 1-SHV-1-741 & -743 and check valves 1-CKV-1-742 & -744 will be installed in Unit 1 per DCN 51112, consistent with the modifications performed for Units 2 and 3 as part of their MSIV seismic ruggedness programs. These new sets of valves are now the boundary points for the Off-Gas Preheaters.

The only potential outlier for this package, concerning the seismic falling interaction between the piping and its components and the nearby masonry block wall, will then be resolved by this plant modification.

Subsystem Description	POS #	Description of Potential Outlier Condition
Steam Supply Lines to Off-Gas Preheaters	12-1	Lines penetrate into the Off-Gas Preheater room through masonry block wall.

4.13 SJAE's Drain to Condenser (Package 13)

The Steam Jet Air Ejectors (SJAE's) drain to Condenser is shown on Flow Diagrams 1-47E801-2 and 1-47E805-3. The drains originate in the SJAE rooms, at boundary valves 1-6-826 & 1-6-822 downstream of the SJAE's in Rooms A and B, respectively, and tie back into a single 1-1/2 inch diameter line which is routed through the Off-Gas pipe chase and connects into an 8-inch diameter collector pipe that is directly attached to the Condenser 1C shell. The collector pipe has several other drain lines attached to it, thus it was considered to be a potential outlier.

Subsystem Description	POS #	Description of Potential Outlier Condition
SJAE's Drain to Condenser 1C	13-1	Drain to condenser ties into a multi-system collector.

4.14 Main Steam Drain Line (Turbine Building) to Condenser (Pkg. 14)

This package includes the 4-inch diameter Main Steam Drain line downstream of normally closed motor operated 1-FCV-1-59 on Elevation 565' in the Steam Tunnel which is the primary drain path to the Condenser. Past valve 1-FCV-1-59, the MS drain line drops into a small pipe chase, turns north and enters an 8-inch diameter guard pipe that is embedded below the slab. The drain line and the guard pipe continue under the gap between the Steam Vault and the Turbine Structure and re-enter the Turbine Building in the Moisture Separator Level Control Reservoir Room. Since the drain line runs through the guard pipe at ground level, differential building displacements will be minor and, based on a review of drawings, adequate flexibility has been provided to accommodate the movements. The guard pipe ends at the room wall and the drain line runs through the room, exits through the north wall into the condenser bay and then enters Condenser 1A.

Also included in the package is a 4-inch vent line which branches off the above mentioned 4-inch diameter MS drain between valves 1-FCV-1-58 and -59 and rises up to Elevation 593' where it crosses the building separation between the Turbine Building Steam Vault and the Turbine Pedestal Structure. The vent line has adequate flexibility to accommodate anticipated differential seismic displacements between the two structures. The vent line continues on to the south end of Condenser 1A and runs down the gap

between the concrete structure and the condenser before connecting back to the 4-inch MS drain prior to its entering the Condenser 1A.

The above lines are shown on Flow Diagram 1-47E-801-1. Support systems for these lines in the Turbine Building are representative of commercial design practice and were determined to be adequate during the walkdown. Potential outliers associated with this package are tabulated below.

Subsystem Description	POS #	Description of Potential Outlier Condition
Main Steam Drain Line to Condenser 1A	14-1	Spring hanger rod detached from 4"ø drain line.
1-FCV-1-59	14-2	Broken flex conduit connection at base.
1-FCV-1-59	14-3	Valve operator (motor) in close proximity to the side rail of steel ladder.

4.15 Condenser (Package 15)

Condensers are the ultimate heat sink for the MSIV alternate leakage treatment drain path. The Main Condenser anchorage was reviewed during the walkdown. Each of the three Condensers is mounted on five concrete pedestals, four at the corners and one in the center of the condenser. The concrete pedestals were observed to be in good condition. Confirmation of the condenser seismic capacity and anchorage adequacy is required to ensure its structural integrity during a DBE seismic event.

Subsystem Description	POS #	Description of Potential Outlier Condition
Condensers 1A, 1B & 1C	15-1	Need to verify the seismic adequacy of the condenser and its anchorage configurations.

4.16 Summary of MSIV Seismic Walkdown Evaluations

A total of fifty-four (54) potential outliers were identified for further evaluation and resolution from the seismic walkdown of the above 15 subsystems under BFN-1 MSIV seismic ruggedness verification program.

Detailed description of the potential outlier conditions, including as-built data, sketches and/or photos are documented in the corresponding walkdown data packages (WDP's) for the respective plant areas. A listing of all walkdown data packages generated under the BFN-1 MSIV seismic ruggedness verification program is provided in Appendix A.

5. POTENTIAL OUTLIER RESOLUTION

Potential outliers identified during the in-plant screening walkdowns, as documented in the respective Potential Outlier Sheet (POS) and tabulated in Table 4-1, were further evaluated for appropriate resolution. Further evaluations and bounding analyses of these potential outliers consisted of hand calculations using basic engineering mechanics techniques for simple configurations, and rigorous piping analyses using TPIPE computer program (Reference 7-11) for more complex piping configurations.

Outlier evaluation guidelines and acceptance criteria are discussed in Section 5.1 below. Results of the outlier evaluation are summarized in Section 5.2.

5.1 Outlier Evaluation Guidelines

Conditions which do not meet the above in-plant screening guidelines or which were judged by the Walkdown Team members to require further reviews are documented as "Potential Outliers". Technical bases and methods used for further analysis and evaluation of these potential outliers are based on industry standard engineering practices, and are consistent with those recommended in BWROG Report GE NEDC-31858P (Reference 7-1), Generic Implementation Procedure (GIP, Reference 7-3) and TVA Design Criteria BFN-50-C-7306 (Reference 7-7), as applicable. Realistic effects of non-linear behavior due to design features and phenomena such as proximity impact with other plant features, interferences and small clearances to stiff structures, geometric restoring forces, wall penetration sealants, and support ductile behavior are considered in the analysis as appropriate.

5.1.1 Seismic Demand

Turbine Building at Browns Ferry Nuclear Plant is classified as a Class II structure per BFN FSAR (Reference 7-11). As such, no dynamic response analysis was performed for the building. The building below the operating floor (El. 617 ft.) is a reinforced concrete framed structure supported on steel H-piles to bedrock. The superstructure above the operating floor consists of welded steel rigid braced frames. As a Class II structure, Turbine Building was designed to seismic zone 1 and a wind speed of 100

mph per Uniform Building Code (Reference 7-13), utilizing industry-standard design guidelines such as AISC (Reference 7-14) and ACI (Reference 7-15).

Majority of the MSIV alternate leakage treatment piping and associated components within the MSIV seismic verification boundary, including the condensers, are located in the Turbine Building. Since no in-structure response spectra were available for the Turbine Building, horizontal seismic demand for components located within about 40 feet of the Turbine Building effective grade elevation (El. 568 ft.) is taken as the BFN 5% damped design basis DBE input spectrum (0.2g) scaled by 1.6 for soil amplification per BFN FSAR (Reference 7-11), and 1.5 for building amplification per GIP (Reference 7-3). For components located above 40 feet of the Turbine Building effective grade elevation, an additional amplification factor of 1.5 is conservatively applied. In the vertical direction, seismic demand is taken as 2/3 that of the horizontal direction, with a soil amplification factor of 1.1 instead of 1.6 per BFN FSAR (Reference 7-11).

5.1.2 Equipment Anchorage Acceptance Criteria

Unanchored, unrestrained, marginally or inadequately anchored equipment components identified as potential outliers are subject to further evaluations. Anchorage capacities are based on those provided in Appendix C of the Generic Implementation Procedure (GIP) for Seismic Verification of Nuclear Plant Equipment (Reference 7-3) with appropriate reduction factors as applicable. Piping and tubing attached to equipment components with flexible support systems, such as vibration isolators, are evaluated for seismic anchor movement.

5.1.3 Pipe Support Acceptance Criteria

Pipe support anchorage loads are verified against capacities as provided in Appendix C of the GIP (Reference 7-3). Support components that may exhibit non-ductile behavior are accepted based the following stress allowables:

Flexural and tensile stresses:	lesser of 0.7 S_u and 1.2 S_y
Shear stresses:	lesser of 0.42 S_u and 0.72 S_y
Bolt stresses:	greater of 0.7 S_u and minimum specified S_y

Where, S_u is the material's ultimate strength
S_y is the material's yield strength

When test data are available, acceptable loads based on test data consider mean less one standard deviation capacity.

Pipe supports not meeting the above criteria may be accepted if adjacent supports and the resulting pipe span can resist dead loads with a factor of safety of 2.0. In-plant considerations regarding other consequences of support failure such as falling and excessive deflection are made when using this provision.

5.1.4 Pipe Stress Acceptance Criteria

Pipe stresses induced by the combination of normal operating loads (dead load and pressure) and seismic loads (DBE inertial loads and DBE seismic anchor movements) are limited to 2.0 S_y.

Majority of the piping and components within the MSIV seismic verification boundary are associated with the Main Steam system which is high energy (i.e., high pressure and temperature), thus the effects from these loads may be significant. Although most piping within the seismic boundary are typically supported by rod hangers, thermal effects are included in the evaluations when judged to be significant, as in the case of rigid support systems, or when addressing proximity interaction and piping flexibility issues.

5.2 Outlier Evaluation Results

Results of further evaluations and analyses to resolve the identified potential outliers are presented in Table 5-1 by the designated subsystems. A listing of the calculation packages associated with further evaluations and bounding analyses of potential outliers identified under the BFN-1 MSIV seismic ruggedness verification program is provided in Appendix B of this report.

For those outliers not meeting the evaluation acceptance criteria as described in the above Section 5.1, plant modifications are designed in accordance with TVA Design Criteria BFN-50-C-7306 (Reference 7-7) and implemented accordingly to resolve these outlier conditions. Other miscellaneous maintenance and/or housekeeping items are resolved through the issuance of work orders. Discussions of the plant modifications

including general maintenance and/or housekeeping items are presented in Chapter 6 of this report.

TABLE 5-1

OUTLIER RESOLUTION SUMMARY

BFN-1 MSIV SEISMIC RUGGEDNESS VERIFICATION PROGRAM

System Description	Outlier		Seismic Issue*					Recommended Resolution
	No.	Description of Condition	A	F	P	D	V	
1.0 Main Steam Drain Line – Turbine Bldg. Main Steam Vault								
Main Steam Drain Taps	1-1	Flexibility concerns associated with the MS lines and Drains.				√		As-installed configurations were evaluated and found to be acceptable per calculation.
MOV 's 1-FCV-1-57 & 58	1-2	Excessive mass and extended valve operators.					√	As-installed configurations were evaluated and found to be acceptable per calculation.
Main Steam and HPCI Drains	1-3	Flexibility concerns associated with the MS and HPCI Drains.				√		As-installed configurations were evaluated and found to be acceptable per calculation.
Main Steam Bypass Drain	1-4	Proximity interaction concerns between bypass line and adjacent 2-way support.			√			As-installed configurations were evaluated and found to be acceptable per calculation.
2.0 Main Steam Lines – Turbine Bldg.								
MS Balancing Header	2-1	Upper pipe clamp nut is missing.	√					Work order 98-001447-001 has been in place. (WO)
MS Turbine Stop/Control Valves	2-2	MS stop/control valves are not covered in the valve screening criteria, thus, seismic adequacy of these valves needs to be verified.					√	Seismic adequacy of these valves is presented in a calculation.
3.0 Main Steam Drain Line – Reactor Building MSIV Vault								
MSIV 's 1-FCV-1-15, 27, 38 & 52	3-1	MSIV 's are not covered in the valve screening criteria, thus, seismic adequacy of these valves needs to be verified.					√	Seismic adequacy of these valves is presented in a calculation.
MOV 1-FCV-1-56	3-2	Excessive mass and extended valve operators.					√	As-installed configurations were evaluated and found to be acceptable per calculation.
4.0 HPCI/RCIC/Aux. Boiler Drains								
RCIC Drain	4-1	Excessive pipe overspan condition.		√				Overspan condition found to be unacceptable by calculation. Additional support to be installed per calculation. (M)
RCIC Drain	4-2	Pipe support with questionable capacity.	√					Pipe support OK per calculation.
Aux. Steam Boiler	4-3	Missing rod hanger hardware (eye nut).	√					Issue work order to re-install the missing nut. (WO)
HPCI Drain	4-4	Multiple pipe overspan conditions on the 1"ø drain line.		√				As-installed configurations were evaluated and found to be acceptable per calculation.
HPCI Line	4-5	Multiple pipe overspan conditions on the 2"ø line.		√				As-installed configurations were evaluated and found to be acceptable per calculation.
HPCI Line and Valve 1-73-222	4-6	Proximity interaction of the 2"ø HPCI line and the valve.			√			As-installed configurations were evaluated and found to be acceptable per calculation.

TABLE 5-1 (CONT'D)

OUTLIER RESOLUTION SUMMARY
BFN-1 MSIV SEISMIC RUGGEDNESS VERIFICATION PROGRAM

System Description	Outlier		Seismic Issue*					Recommended Resolution
	No.	Description of Condition	A	F	P	D	V	
4.0 HPCI/RCIC/Aux. Boiler Drains (cont'd)								
HPCI Drain	4-7	Several floor-mounted supports were noted to be damaged (potentially due to thermal effects). Also, anchor bolt spacing violations on these typical supports.	√					Existing support anchorage capacities are adequate per calculation. However, the damaged supports located just passed the blowout panel needs to be repaired and longer lugs are required to avoid pipe from sliding off the existing supports due to thermal movements. (M) *Use 3" thermal movement as a guide for the design of support mods.*
HPCI Drain	4-8	Flexibility concern on 2"ø HPCI line due to differential displacement between RB and TB				√		As-installed configurations were evaluated and found to be acceptable per calculation.
5.0 MS PT 1-72, -76, -82, -86 & -93								
SS Tubing to 1-PT-1-72 & 76	5-1	Overspan conditions for both lines. Also, flexibility issue exists on tubing to 1-PT-1-72.	√	√		√		Replace existing support at N-end with rod hanger; and add new rod hanger support at S-end. (M)
SS Tubing to 1-PT-1-82	5-2	Overspan conditions due to broken weld on the support and missing clamps.	√	√				Replace both existing supports at N- and S-ends with rod hangers. (M)
SS Tubing to 1-PT-1-86	5-3	Overspan conditions due to broken weld on the support and loose clamp.	√	√				Replace both existing supports at N- and S-ends with rod hangers. (M)
SS Tubing to 1-PT-1-86	5-4	Flexibility concern on ½"ø tubing.				√		PER 04-000616-000 was generated to identify the required work order to remove existing clamp on support. (WO)
SS Tubing to PT 1-93	5-5	Overspan condition due to broken support.	√	√				Replace existing support with rod hanger. (M)
SS Tubing to PT 1-93	5-6	Flexibility concern on ½"ø tubing along the wall.	√	.		√		PER 04-000616-000 was generated to identify the required work order to remove existing clamp on the spacer support. (WO)
6.0 Main Steam Sample Lines to Sampling Station								
Sample Line A	6-1	Missing tubing clamp.	√					PER 04-000616-000 was generated to identify the required work order to re-install the missing clamp. (WO)
Sample Station	6-2	Unanchored constant temperature bath cabinet.	√					Provide positive anchorage to the cabinet. (M)
Sample Line A to 1-PT-1-16A/B	6-3	Flexibility concerns on sample lines to 1-PT-1-16A/B, involving broken support.	√	√				Replace existing wall-mounted support with rod hangers. (M)
Sample Line A to 1-PT-1-16A/B	6-4	Missing nuts on U-bolt support.	√					PER 04-000616-000 was generated to identify the required work order to re-install the missing nuts. (WO)

TABLE 5-1 (CONT'D)

OUTLIER RESOLUTION SUMMARY
BFN-1 MSIV SEISMIC RUGGEDNESS VERIFICATION PROGRAM

System Description	Outlier		Seismic Issue*					Recommended Resolution
	No.	Description of Condition	A	F	P	D	V	
7.0 Main Steam Bypass								
MS Bypass Valve Assembly	7-1	MS Bypass valve chest is not covered in the valve screening criteria, thus, its seismic adequacy needs to be verified.					√	Seismic adequacy of the bypass valve assembly is presented in a calculation.
8.0 MS Stop Valve Above Seat Drains								
1-FCV-6-101, -102 & -103	8-1	Proximity interactions of valve yokes and beam.			√			As-installed configurations were evaluated in a calculation. Valves 101 & 102 were found to be OK as-is, but not for valve 103. Initiate work request to cope the bottom flange of the WF beam supporting the steel grating at El. 601'-6". (WO) *Note that a lateral (E-W) clearance of 3" minimum should be provided to preclude potential seismic impact between the valve and nearby platform steel.*
SV-D Above Seat Drain Piping	8-2	Broken pipe strap on support.	√					PER 04-000616-000 was generated to identify the required work order to replace broken pipe strap. (WO)
1-FCV-6-100	8-3	Broken flex conduit connection to operator.					√	PER 04-000617-000 was generated to identify the required work order to repair broken flex conduit. (WO)
9.0 Steam to Steam Seal Regulator								
Main Steam to 1-FCV-1-146	9-1	Overspan condition on the 4"ø MS line to the supply to steam seal MOV 1-FCV-1-146.	√	√				As-installed configurations were evaluated and found to be acceptable per calculation.
Main Steam to 1-FCV-1-146	9-2	Loose rod hanger eye nuts and disengaged rod.	√	√				PER 04-000616-000 was generated to identify the required work orders (2) to correct rod hanger hardware deficiencies. (WO)
1-PCV-1-147 Air Tubing	9-3	Inadequate flexibility for air line connected to the top of valve.				√		As-installed configurations were evaluated and found to be acceptable per calculation.
1-PCV-1-147 Instrumentation	9-4	Falling interaction concern from nearby block wall at El. 617'.		√	√			Re-route tubing and protect instrumentation panel, as necessary, to preclude falling interactions. (M)
1-PCV-1-147	9-5	Extended valve operator.					√	As-installed configurations were evaluated and found to be acceptable per calculation.
1-FCV-1-146, 145 & 154	9-6	Extended valve operator, and substantial operator weight.					√	As-installed configurations were evaluated and found to be acceptable per calculation.

TABLE 5-1 (CONT'D)

OUTLIER RESOLUTION SUMMARY
BFN-1 MSIV SEISMIC RUGGEDNESS VERIFICATION PROGRAM

System Description	Outlier		Seismic Issue*					Recommended Resolution
	No.	Description of Condition	A	F	P	D	V	
10.0 Steam Supply to RFP Turbines								
Steam Supply Line	10-1	Stanchion supports for the steam supply header at El. 617' (Total of 6). 1 support for the 6"ø line near H/T4; 2 supports for the 3"ø line near D/T4; and 1 support for each of the 4"ø branch line to RFP Turbine compartments.		√				Modify existing stanchion supports for the postulated DBE seismic movements. A total of 3 supports require modifications – one in the S-end (H/T4) and two in the N-end (D/T4) of the steam supply header at the Turbine deck, El. 617. Note that similar type supports inside each of the RFP Turbine rooms are OK as-is. (M)
Steam Supply Line	10-2	Turbine Bldg. overhead crane.			√			Resolved per calculation.
RFP Stop Valve Above Seat Drains	10-3	Valve operators with large eccentric mass on ½"ø and ¾"ø lines.					√	As-installed configurations were evaluated and found to be acceptable per calculation.
Tubing to PI 1-134	10-4	Missing or broken clamps (2 places) on tubing to PI 1-134. Also, tubing is bent and sagging.	√	√				PER 04-000616-000 was generated to identify the required work order to re-install tubing clamps and repair bent tubing. (WO)
Steam Supply Line	10-5	Missing nut on rod hanger support.	√					PER 04-000616-000 was generated to identify the required work order to re-install the missing nut. (WO)
Steam Supply Line	10-6	Overspan conditions on the 6"ø steam supply line.	√	√				As-installed configurations were evaluated and found to be acceptable per calculation.
11.0 Steam Supply to SJAE's								
SJAE 's 1A & 1B	11-1	Need to verify the seismic adequacy of SJAE anchorage.	√					Seismic adequacy of SJAE anchorage was verified per calculation.
MOV 1-FCV-6-114	11-2	Broken flex conduit connection to valve motor operator.					√	PER 04-000617-000 was generated to identify the required work order to repair the broken flex conduit connection to valve motor operator. (WO)
MS Supply to SJAE's	11-3	Overspan condition on the 3"ø supply line.	√	√				As-installed configurations were evaluated and found to be acceptable per calculation.
MS Supply Drain at SJAE 1B	11-4	Overspan condition on the 1"ø steam supply drain line downstream of 1-FCV-1-114.	√	√				As-installed configurations were evaluated and found to be acceptable per calculation.
Steam Trap Drain at SJAE 1A	11-5	Overspan condition on the 1"ø steam trap drain between 1-FCV-1-172 and 1-PCV-1-166.	√	√				Overspan condition was found to be unacceptable per calculation. Add a new support near T4 wall (rod hanger). (M)
Steam Trap Drain at SJAE 1B	11-6	Overspan condition on the 1"ø steam trap drain between 1-FCV-1-173 and 1-PCV-1-167.	√	√				Overspan condition was found to be unacceptable per calculation. Add a new support near T4 wall (rod hanger). (M)

TABLE 5-1 (CONT'D)

OUTLIER RESOLUTION SUMMARY
BFN-1 MSIV SEISMIC RUGGEDNESS VERIFICATION PROGRAM

System Description	Outlier		Seismic Issue*					Recommended Resolution
	No.	Description of Condition	A	F	P	D	V	
12.0 Steam Supply to Off-Gas Preheaters								
Steam Supply Lines to Off-Gas Preheaters	12-1	Lines penetrate into the Off-Gas Preheater room through masonry block wall.		√	√			Re-route pipes to preclude falling interactions. Note that pipe re-routing will be done in conjunction with the installation of new isolation valves (1-SHV-1-741 & 743 and 1-CKV-1-742 & 744) under DCN 51112. (M)
13.0 SJAE's Drain to Condenser								
SJAE's Drain to Condenser 1C	13-1	Drain to condenser ties into a multi-system collector.						Re-route drain line to achieve a direct path to condenser. (M)
14.0 Main Steam Drain Line to Condenser								
Main Steam Drain Line to Condenser 1A	14-1	Spring hanger rod detached from 4"ø drain line.	√					PER 04-000616-000 was generated to identify the required maintenance work order to re-connect the detached rod to pipe. (WO)
1-FCV-1-59	14-2	Broken flex conduit connection at base.					√	PER 04-000617-000 was generated to identify the required work order to repair broken flex conduit. (WO)
1-FCV-1-59	14-3	Valve operator (motor) in close proximity to the side rail of steel ladder.			√			As-installed configurations were evaluated and found to be unacceptable per calculation. Valve should be re-oriented with about 6" clearance to the nearest fixed structure to the north. (M) *Note that the 4"ø MS drain and vent pipes are to be replaced under DCN 51112. As such, provide 6" clearance when installing the new pipes.*
15.0 Condensers								
Condensers 1A, 1B & 1C	15-1	Need to verify the seismic adequacy of the condenser and its anchorage configurations.	√					Condenser and its anchorage configurations were evaluated and found to be acceptable per calculation.

* Seismic Issue Notations:
A = Anchorage/Support Capacity; F = Failure/Falling Interaction; P = Proximity & Impact; D = Differential Displacement; V = Valve Screening & Performance

Note: Items that require engineering design modifications are listed as (M), and are to be resolved by various DCN's.
Items that require resolution by work order requests as listed as (WO).

6. SUMMARY AND RECOMMENDATIONS

A total of fifty-four (54) potential outliers were identified in the MSIV seismic ruggedness verification walkdown for BFN-1. Majority of these potential outliers were resolved by performing further analyses and evaluations to the acceptance criteria of TVA Design Criteria BFN-50-C-7306 (Reference 7-7). For the remaining outliers that did not meet the above evaluation criteria, plant design modifications are developed for appropriate resolution. In addition, work requests are initiated for those outliers that fall into the general category of maintenance and housekeeping items, such as missing support hardware, broken parts, proximity interaction and flexibility concerns and others. Table 6-1 presents a summary of the BFN-1 MSIV seismic ruggedness verification program.

6.1 Plant Modifications

Plant design modifications are developed for outliers not meeting the acceptance requirements of TVA Design Criteria BFN-50-C-7306 (Reference 7-7). Design modifications ranged from simple support hardware modifications to addition of new pipe supports, rerouting of piping and others. A total of fifteen (15) plant design modifications were implemented for the resolution of these MSIV seismic ruggedness outliers. A brief description of each of the plant modifications is provided in Table 6-2.

Engineering designs of the plant modifications are documented in various calculation packages listed in Appendix C of this report. These plant modifications will be implemented under several Design Change Notices (DCN's 51112, 51669, and 51126).

6.2 Maintenance and Housekeeping Items

In addition to the plant modifications discussed in Section 6.1 above, a total of fifteen (15) miscellaneous maintenance and housekeeping items were identified for appropriate actions and resolution. These maintenance items, along with a brief description, are tabulated in Table 6-3. These items will be disposed through maintenance work requests.

TABLE 6-1

Summary of BFN-1 MSIV Seismic Ruggedness Verification Program

Sub-system No.	Subsystem Description	No. of Potential Outliers	No. of Design Mods	No. of Maint. Items
1	MS Drain Line – Turbine Bldg. Main Steam Tunnel	4	0	0
2	MS Lines – Turbine Bldg.	2	0	1
3	MS Drain Line – Reactor Bldg. Main Steam Vault	2	0	0
4	HPCI/RCIC/Aux. Boiler Drains	8	2	1
5	MS Pressure Transmitters PT 1-72, 76, 82, 86 & 93	6	4	2
6	MS Sample Lines to Sampling Station	4	2	2
7	MS Bypass	1	0	0
8	MS Stop Valve Above Seat Drains	3	0	3
9	MS to Steam Seal Regulator	6	1	1
10	Steam Supply to RFP Turbines	6	1	2
11	Steam Supply to Steam Jet Air Ejectors (SJAE's)	6	2	1
12	Steam Supply to Off-Gas Preheaters	1	1	0
13	SJAE's Drain to Condenser	1	1	0
14	MS Drain Line (Turbine Bldg.) to Condenser	3	1	2
15	Condenser	1	0	0
	Total	**54**	**15**	**15**

TABLE 6-2

Summary of Plant Modifications
BFN-1 MSIV Seismic Ruggedness Verification Program

Item	Ref. (1)	Description of Plant Modification	Reference DCA Drawing No. (2)
1	POS 4-1	Add one (1) new support.	1-47B456-2100 see note (3)
2	POS 4-7	Add four (4) new supports.	1-47B400-2030 to -2033
3	POS 5-1	Add two (2) new supports.	1-47B400-2026 & -2027
4	POS 5-2	Add two (2) new supports.	1-47B400-2022 & -2023
5	POS 5-3	Add two (2) new supports.	1-47B400-2024 & -2025
6	POS 5-5	Add one (1) new support.	1-47B400-2021
7	POS 6-2	Provide anchorage to the Constant Temperature Bath Cabinet.	1-48B879-1 see note (4)
8	POS 6-3	Add one (1) new support.	1-47B400-2020
9	POS 9-4	Reroute tubing to preclude seismic falling interaction.	see note (2)
10	POS 10-1	Add three (3) new supports.	1-47B400-2034-1 & -2, and 1-47B400-2035 & -2036

TABLE 6-2 (cont'd)

Summary of Plant Modifications
BFN-1 MSIV Seismic Ruggedness Verification Program

Item	Ref. (1)	Description of Plant Modification	Reference DCA Drawing No. (2)
11	POS 11-5	Add one (1) new support.	1-47B400-2028
12	POS 11-6	Add one (1) new support.	1-47B400-2029
13	POS 12-1	Reroute piping to preclude seismic falling interaction.	see note (2)
14	POS 13-1	Reroute drain line directly to the condenser.	see note (2)
15	POS 14-3	Relocate valve to preclude seismic proximity interaction.	see note (2)

(1) Detailed description and as-built information of these items, including photos and/or sketches, can be found in the Potential Outlier Sheet (POS) contained in the respective MSIV seismic ruggedness Walkdown Data Packages (WDP's).

(2) Refer to DCN 51112, unless noted otherwise.

(3) Refer to DCN 51669.

(4) Refer to DCN 51126.

TABLE 6-3

Summary of Misc. Maintenance & Housekeeping Items
BFN-1 MSIV Seismic Ruggedness Verification Program

Item	Ref.*	Description	Recommended Action
1	POS 2-1	Replace missing upper pipe clamp nut.	Work Order WO # 98-001447-001 was issued.
2	POS 4-3	Replace missing eye nut.	Work Order WO # 04-712923-000 was issued.
3	POS 5-4	Remove existing clamp on pipe support.	Work Order WO # 04-712923-000 was issued. (See also DCA 51112-131)
4	POS 5-6	Remove existing clamp on pipe support.	Work Order WO # 04-712923-000 was issued. (See also DCA 51112-132)
5	POS 6-1	Replace missing tubing clamp.	Work Order WO # 04-712923-000 was issued.
6	POS 6-4	Replace missing nut on U-bolt support.	Work Order WO # 04-712923-000 was issued.
7	POS 8-1	Cope the bottom flange of the WF beam to provide 3" clearance (E-W) to preclude seismic proximity interaction.	PIC 61400 was added to DCN 51112 to initiate the work.
8	POS 8-2	Replace broken pipe strap on support.	Work Order WO # 04-712923-000 was issued.
9	POS 8-3	Repair broken flex conduit connection.	Work Order WO # 04-712926-000 was issued.
10	POS 9-2	Replace loose rod hanger eye nuts and disengaged rod.	Work Order WO # 04-712923-000 was issued.

TABLE 6-3 (cont'd)

Summary of Misc. Maintenance & Housekeeping Items
BFN-1 MSIV Seismic Ruggedness Verification Program

Item	Ref. *	Description	Recommended Action
11	POS 10-4	Replace missing or broken tubing clamps and repair bent tubing.	Work Order WO # 04-712923-000 was issued.
12	POS 10-5	Replace missing nut on rod hanger support.	Work Order WO # 04-712923-000 was issued.
13	POS 11-2	Repair broken flex conduit connection.	Work Order WO # 04-712926-000 was issued.
14	POS 14-1	Reinstall detached rod to pipe support.	Work Order WO # 04-712923-000 was issued.
15	POS 14-2	Repair broken flex conduit connection.	Work Order WO # 04-712926-000 was issued.

* Detailed description and as-built information of these items, including photos and/or sketches, can be found in the Potential Outlier Sheet (POS) contained in the respective MSIV seismic ruggedness Walkdown Data Packages (WDP's).

7. REFERENCES

7-1 BWROG Report for Increasing MSIV Leakage Rate Limits and Elimination of Leakage Control Systems, GE NEDC-31858P, Revision 2. September 1993.

7-2 TVA calculation, "MSIV Leakage Containment System Boundaries, Physical Properties, System 001." Rev. 3.

7-3 "Generic Implementation Procedure (GIP) for Seismic Verification of Nuclear Plant Equipment", Revision 2A, March 1993. Seismic Qualification Utility Group (SQUG).

7-4 EPRI Report NP-7149. March 1991. "Summary of the Seismic Adequacy of Twenty Classes of Equipment Required for Safe Shutdown of Nuclear Plants." Electric Power Research Institute, Palo Alto, California.

7-5 EPRI Report RP-2635-1. February 1987. "Piping Seismic Adequacy Criteria Recommendation Based on Performance During and After Earthquakes." Volumes 1 and 2. Electric Power Research Institute, Palo Alto, California.

7-6 TVA Walkdown Instruction WI-BFN-0-CEB-07, "Engineering Walkdown Instruction for MSIV Seismic Ruggedness Verification." Revision 0.

7-7 TVA Detailed Design Criteria BFN-50-C-7306, "Qualification Criteria for Seismic Class II Piping, Pipe Supports, and Components." Revision 1.

7-8 TVA calculation, "In-Plant Screening Tools for Seismic II/I Spray Walkdown Evaluations." Revision 1.

7-9 TVA calculation, "Main Steam Seismic Ruggedness Verification." Revision 5.

7-10 TVA calculation, "Main Steam Seismic Ruggedness Evaluation." Revision 1.

7-11 "*TPIPE* Program User Manual." Version 16, July 1994.

7-12 TVA Browns Ferry Nuclear Plant Final Safety Analysis Report (FSAR).

7. REFERENCES (CONT'D)

7-13 Uniform Building Code.

7-14 American Institute of Steel Construction (AISC). "Manual of Steel Construction." 6th Edition.

7-15 American Concrete Institute (ACI). "Building Code Requirements for Reinforced Concrete." ACI 318-1963 Edition.

7-16 USAS B31.1.0, "Power Piping." 1967 Edition.

APPENDIX A:

BFN-1 MSIV SEISMIC RUGGEDNESS VERIFICATION

WALKDOWN DATA PACKAGES

BFN-1 MSIV Seismic Ruggedness Verification

Walkdown Data Packages

Walkdown Data Package (WDP)	Title	Rev.
BFN1-CEB-MSIV-01	MSIV Seismic Ruggedness Walkdown Screening Evaluation Documentation for BFN Unit 1 – Package 1	0
BFN1-CEB-MSIV-02	MSIV Seismic Ruggedness Walkdown Screening Evaluation Documentation for BFN Unit 1 – Package 2	0
BFN1-CEB-MSIV-03	MSIV Seismic Ruggedness Walkdown Screening Evaluation Documentation for BFN Unit 1 – Package 3	0
BFN1-CEB-MSIV-04	MSIV Seismic Ruggedness Walkdown Screening Evaluation Documentation for BFN Unit 1 – Package 4	0
BFN1-CEB-MSIV-05	MSIV Seismic Ruggedness Walkdown Screening Evaluation Documentation for BFN Unit 1 – Package 5	0
BFN1-CEB-MSIV-06	MSIV Seismic Ruggedness Walkdown Screening Evaluation Documentation for BFN Unit 1 – Package 6	0
BFN1-CEB-MSIV-07	MSIV Seismic Ruggedness Walkdown Screening Evaluation Documentation for BFN Unit 1 – Package 7	0
BFN1-CEB-MSIV-08	MSIV Seismic Ruggedness Walkdown Screening Evaluation Documentation for BFN Unit 1 – Package 8	0
BFN1-CEB-MSIV-09	MSIV Seismic Ruggedness Walkdown Screening Evaluation Documentation for BFN Unit 1 – Package 9	0
BFN1-CEB-MSIV-10	MSIV Seismic Ruggedness Walkdown Screening Evaluation Documentation for BFN Unit 1 – Package 10	0
BFN1-CEB-MSIV-11	MSIV Seismic Ruggedness Walkdown Screening Evaluation Documentation for BFN Unit 1 – Package 11	0
BFN1-CEB-MSIV-12	MSIV Seismic Ruggedness Walkdown Screening Evaluation Documentation for BFN Unit 1 – Package 12	0
BFN1-CEB-MSIV-13	MSIV Seismic Ruggedness Walkdown Screening Evaluation Documentation for BFN Unit 1 – Package 13	0
BFN1-CEB-MSIV-14	MSIV Seismic Ruggedness Walkdown Screening Evaluation Documentation for BFN Unit 1 – Package 14	0
BFN1-CEB-MSIV-15	MSIV Seismic Ruggedness Walkdown Screening Evaluation Documentation for BFN Unit 1 – Package 15	0

APPENDIX B:

BFN-1 MSIV SEISMIC RUGGEDNESS VERIFICATION

OUTLIER RESOLUTION CALCULATION PACKAGES

BFN-1 MSIV Seismic Ruggedness Verification
Outlier Resolution Calculation Packages

Title	Rev.
Main Steam Drain Line, MSIV Ruggedness Seismic Analysis – Resolution of POS 1-1, 1-3 & 1-4	0
HPCI Drain Line, MSIV Ruggedness Seismic Analysis – Resolution of POS 4-6, 4-7 & 4-8	0
Misc. Main Steam Valve Performance Issues, MSIV Ruggedness Seismic Analysis – Resolution of POS 2-2, 3-1 & 7-1	1
Misc. Extended Valve Operator Issues, MSIV Ruggedness Seismic Analysis – Resolution of POS 1-2, 3-2, 9-5, 9-6 & 10-3	0
Misc. Piping Overspan Issues, MSIV Ruggedness Seismic Analysis – Resolution of POS 4-4, 4-5, 9-1, 10-6, 11-3, 11-4, 11-5 & 11-6	0
Misc. Seismic Interaction Issues, MSIV Ruggedness Seismic Analysis – Resolution of POS 10-1, 10-2 & 11-1	0
Misc. Valve Proximity Interaction Issues, MSIV Ruggedness Seismic Analysis – Resolution of POS 8-1, 9-3 & 14-3	0
Seismic Verification of Condenser and its Anchorage, MSIV Ruggedness Seismic Analysis – Resolution of POS 15-1	0
RCIC Line, MSIV Ruggedness Seismic Analysis – Resolution of POS 4-1	1
RCIC Line, MSIV Ruggedness Seismic Analysis – Resolution of POS 4-2	0

APPENDIX C:

BFN-1 MSIV SEISMIC RUGGEDNESS VERIFICATION

PLANT MODIFICATION DESIGN CALCULATION PACKAGES AND MAINTENANCE WORK ORDERS

BFN-1 MSIV Seismic Ruggedness Verification
Plant Modification Design Calculation Packages and Work Orders

Potential Outlier No.*	Calculation or Work Order No.	Calculation Title or Description of Work Order
2-1 (W)	WO 98-001447-001	Replace missing upper pipe clamp nut
4-1 (M)	Calculation	*RCIC Line, MSIV Ruggedness Seismic Analysis – Resolution of POS 4-1, Rev. 1*
4-3 (W)	WO 04-712923-000	Replace missing eye nut
4-7 (M)	Calculation	*Main Steam Seismic Ruggedness Verification, Unit 1, Rev. 0*
5-1 (M)	Calculation	*Main Steam Seismic Ruggedness Verification, Unit 1, Rev. 0*
5-2 (M)	Calculation	*Main Steam Seismic Ruggedness Verification, Unit 1, Rev. 0*
5-3 (M)	Calculation	*Main Steam Seismic Ruggedness Verification, Unit 1, Rev. 0*
5-4 (W)	WO 04-712923-000 (see also DCA 51112-131)	Remove pipe clamp on existing support
5-5 (M)	Calculation	*Main Steam Seismic Ruggedness Verification, Unit 1, Rev. 0*
5-6 (W)	WO 04-712923-000 (see also DCA 51112-132)	Remove pipe clamp on existing support
6-1 (W)	WO 04-712923-000	Replace missing tubing clamp
6-2 (M)	Calculation	*Design of Anchorage for Bath and Circulator Cabinet for Unit 1, Rev. 0*
6-3 (M)	Calculation	*Main Steam Seismic Ruggedness Verification, Unit 1, Rev. 0*
6-4 (W)	WO 04-712923-000	Replace missing nut on U-bolt support

* (M) – Plant Modifications (W) – Work

BFN-1 MSIV Seismic Ruggedness Verification
Plant Modification Design Calculation Packages and Work Orders

Potential Outlier No.*	Calculation or Work Order No.	Calculation Title or Description of Work Order
8-1 (W)	Refer to DCN 51112 PIC 61400	Cope bottom flange of the WF beam to provide minimum of 3" clearance in the E-W direction
8-2 (W)	WO 04-712923-000	Replace broken pipe strap on the support
8-3 (W)	WO 04-712926-000	Replace broken flex conduit connection
9-2 (W)	WO 04-712923-000	Replace loose rod hanger eye nuts and the disengaged rod
9-4 (M)	Refer to DCN 51112	Reroute instrument tubing
10-1 (M)	Calculation	*Main Steam Seismic Ruggedness Verification, Unit 1, Rev. 0*
	Calculation	*Main Steam Seismic Ruggedness Verification, Units 2 & 3, Rev. 5*
10-4 (W)	WO 04-712923-000	Replace missing or broken tubing clamps and repair bent tubing
10-5 (W)	WO 04-712923-000	Replace missing nut on rod hanger support
11-2 (W)	WO 04-712926-000	Replace broken flex conduit connection
11-5 (M)	Calculation	*Main Steam Seismic Ruggedness Verification, Unit 1, Rev. 0*
11-6 (M)	Calculation	*Main Steam Seismic Ruggedness Verification, Unit 1, Rev. 0*
12-1 (M)	Refer to DCN 51112	Reroute piping
13-1 (M)	Refer to DCN 51112	Reroute drain line to condenser
14-1 (W)	WO 04-712923-000	Reinstall detached rod to pipe support
14-2 (W)	WO 04-712926-000	Replace broken flex conduit connection
14-3 (M)	Refer to DCN 51112	Relocate valve

* (M) – Plant Modifications (W) – Work Orders

QA Record

ORIGINAL

TVAN CALCULATION COVERSHEET/CCRIS UPDATE

Page i

REV 0 EDMS/RIMS NO.	EDMS TYPE:	EDMS ACCESSION NO (N/A for REV. 0)
R14 990909 102	Calculations(Nuclear)	W78 040603 067

Calc Title: **SEISMIC EVALUATION REPORT**

CALC ID	TYPE	ORG	PLANT	BRANCH	NUMBER	CUR REV	NEW REV	REVISION APPLICABILITY
CURRENT	CN	NUC	BFN	CEB	CDN0 001 99 0113	001	002	Entire calc ☐
NEW	CN	NUC	BFN	CEB				Selected pages ☒

ACTION	NEW ☐ REVISION ☒	DELETE ☐ RENAME ☐	SUPERSEDE ☐ DUPLICATE ☐	CCRIS UPDATE ONLY ☐ (Verifier Approval Signatures Not Required)	No CCRIS Changes ☐ (For calc revision, CCRIS been reviewed and no CCRIS changes required)

UNITS	SYSTEMS	UNIDS
000	001	N/A

DCN,EDC,N/A	APPLICABLE DESIGN DOCUMENT(S)	CLASSIFICATION
51112	N/A	D

QUALITY RELATED?	SAFETY RELATED? (If yes, QR = yes)	UNVERIFIED ASSUMPTION	SPECIAL REQUIREMENTS AND/OR LIMITING CONDITIONS?	DESIGN OUTPUT ATTACHMENT?	SAR/TS AFFECTED
Yes ☒ No ☐	Yes ☐ No ☒	Yes ☐ No ☒	Yes ☐ No ☒	Yes ☐ No ☒	Yes ☒ No ☐

PREPARER ID	PREPARER PHONE NO	PREPARING ORG (BRANCH)	VERIFICATION METHOD	NEW METHOD OF ANALYSIS
John O. Dizon	(256) 729-7000 x18376	CEB	Design Review	☐ Yes ☒ No

PREPARER SIGNATURE	DATE	CHECKER SIGNATURE	DATE
John O. Dizon J.O. Dizon	6/02/04	S.J. Eder	6/02/04
VERIFIER SIGNATURE	**DATE**	**APPROVAL SIGNATURE**	**DATE**
S.J. Eder	6/02/04	William V. Crouch for RDC	6/3/04

STATEMENT OF PROBLEM/ABSTRACT

This calculation documents the MSIV Seismic Ruggedness Verification for Browns Ferry Nuclear Plant, Units 1, 2 & 3 for the Increased MSIV Leakage Tech Spec Change.

MICROFICHE/EFICHE Yes ☐ No ☒ FICHE NUMBER(S)

☐ LOAD INTO EDMS AND DESTROY

☒ LOAD INTO EDMS AND RETURN CALCULATION TO CALCULATION LIBRARY. ADDRESS: BFN Calculation Library

☐ LOAD INTO EDMS AND RETURN CALCULATION TO:

TVAN CALCULATION COVERSHEET/CCRIS UPDATE

Page IA

CALC ID	TYPE	ORG	PLANT	BRANCH	NUMBER	REV
	CN	NUC	BFN	CEB	CDN0 001 99 0113	002

ALTERNATE CALCULATION IDENTIFICATION

BLDG	ROOM	ELEV	COORD/AZIM	FIRM	Print Report Yes
00	N/A	N/A	N/A	Bechtel	

CATEGORIES F06

KEY NOUNS (A-add, D-delete)

ACTION (A/D)	KEY NOUN	A/D	KEY NOUN
A	MSIV		
A	RUGGEDNESS		
A	CONDENSER		
A	ANCHORAGE		

CROSS-REFERENCES (A-add, C-change, D-delete)

ACTION (A/C/D)	XREF CODE	XREF TYPE	XREF PLANT	XREF BRANCH	XREF NUMBER	XREF REV
A	P	CN	BFN	CEB	CDN0 001 98 0038	
A	P	CN	BFN	CEB	CDN0 001 98 0039	
A	P	CN	BFN	CEB	CDN1 000 2004 0041	

CCRIS ONLY UPDATES:
Following are required only when making keyword/cross reference CCRIS updates and page 1 of form NEDP-2-1 is not included:

PREPARER SIGNATURE	DATE	CHECKER SIGNATURE	DATE
PREPARER PHONE NO.	EDMS ACCESSION NO.	W78 040603 067	

TVAN CALCULATION RECORD OF REVISION	
CALCULATION IDENTIFIER	CDN0 001 99 0113
Title	HCLPF CALCULATIONS OF SELECTED BLOCKWALLS FOR SEISMIC IPEEE PROGRAM
Revision No.	DESCRIPTION OF REVISION
000	Initial Issue **Total Number of Pages = 125**
001	Minor revision to correct Table of Contents page, change Attachment Section 11.0 to 9.0 and delete reference to Appendices and minor changes to the EQE "Seismic Evaluation Report", page A40 show valves 71-6B and 73-6B as open, and add Reference 10 on page A75 and add reference to Reference 10 to pages A44 and A46. **Total Number of Pages = 125**
002	Add pages i, iA, ii & iii; delete page 2 (previous revision log); minor revision to pages 4, 5 & 6 to reference Attachment D; and add Attachment D to this revision. The impact to the FSAR and Tech Specs has been addressed by the 10 CFR 50.59 review for DCN 51112. **Total Number of Pages = 131**

TVAN CALCULATION VERIFICATION FORM

Calculation Identifier **CDN0 001 99 0113** Revision **002**

Method of verification used:

1. Design Review ☒
2. Alternate Calculation ☐
3. Qualification Test ☐

Verifier Stephen J. Eder Date 6/02/04

Comments:

This revision of the calculation has been reviewed by the Design Review Methodology and has been determined to be technically adequate based on the design input information contained herein using accepted handbook and/or computer applications, and sound engineering practices and techniques, supplemented by applicable industry-standard guidelines.

QA Record

ORIGINAL

TVAN CALCULATION COVERSHEET

Title Seismic Evaluation Report	Plant BFN Unit 0	Page 1 of see rev. log	

Preparing Organization NE/CEB	Key Nouns (For EDM) Seismic, Component Qualification, Piping, Pipe Support		
Calculation Identifier CD-N0001-990113	Each time these calculations are issued, preparer must ensure that the original (R0) RIMS/EDM accession number is filled in.		
	Rev	(for EDM use)	EDM Accession Number
Applicable Design Document(s) BFN-50-C-7100 BFN-50-C-7107, BFN-50-C-7306	R0		R14 990909 102
	R1		R14 000613 106
UNID System(s) 001	R2		
	R3		

	R0	R1	R2	R3			
DCN, EDC, NA	N/A	T41182A, 50210A 6-8-00			Quality Related?	Yes ■	No ☐
Prepared	F Caramante 9/8/99	6/7/00			Safety related? If yes, mark Quality Related yes	Yes ☐	No ■
Checked	9/8/99	6-8-00 J.N. HUDGINS			These calculations contain unverified assumption(s) that must be verified later?	Yes ☐	No ■
Design Verified	9/8/99	6-8-00 J.N. HUDGINS			These calculations contain special requirements and/or limiting conditions?	Yes ☐	No ■
Approved	L.R. Medlin, Jr.	Ed Fowell for LRM			These calculations contain a design output attachment?	Yes ☐	No ■
Approval Date	9-9-99	6-13-00			Calculation Classification	D	
SAR Affected?	Yes ☐ No ■	Yes ☐ No ☑	Yes ☐ No ☐	Yes ☐ No ☐	Microfiche generated	Yes ☐	No ■
Revision applicability	Entire calc ■	Entire calc ☑ Selected pgs ☐	Entire calc ☐ Selected pgs ☐	Entire calc ☐ Selected pgs ☐	Number		

Statement of Problem:

The Main Steam piping downstream of the outboard MSIV's is desired to be capable of with standing an earthquake so that any leakage through the MSIV's from the Reactor side can be contained and diverted to the main condenser. This calculation supports the MSIV leakage tech spec change at BFN.

Abstract

This calculation is documents the "Browns Ferry Nuclear Plant - Increased MSIV Leakage Tech Spec Change Submittal Seismic Evaluation Report", (200918-R-002); August 1999, By EQE International, Oakland, CA. Additionally, Bounding Calculations (200918-C-002) "Seismic evaluation for the Condensers" and (200918-C-001) "Seismic verification of the main steam drain piping and supports associated with the MSIV alternate leakage treatment pathway" are contained in this calculation.

|R1 No change to abstract

☒ Microfilm and return calculation to Calculation Library. Address: POB-1A-BFN

☐ Microfilm and return calculation to:

☐ Microfilm and destroy.

TVAN CALCULATION DESIGN VERIFICATION FORM

Calculation Identifier **CD-N0001-990113** Revision 1

Method of design verification used:

1. Design Review ☒
2. Alternate Calculation ☐
3. Qualification Test ☐

Comments:

Minor changes that are not technical in nature therefore a detailed design review within a strict interpretation of the design review was not required.

6-8-00

This replaced by revision 1

TVAN CALCULATION TABLE OF CONTENTS

Calculation Identifier: CD-N0001-990113	Revision: 1	Page 4

TABLE OF CONTENTS

SECTION	TITLE	PAGE
	Coversheet	1
	Revision Log	2
	Independent Review Form	3
	Table of Contents	4
1.0	Purpose	5
2.0	Assumptions	5
3.0	Requirements/Limiting Conditions	5
4.0	References	5
5.0	Design Input Data	5
6.0	Supporting Graphics	5
7.0	Computations and Analysis	5
8.0	Summary of Results	5
9.0	Attachments	6
	"A" - Browns Ferry Nuclear Plant - Increased MSIV Leakage Tech Spec Change Submittal - Seismic Evaluation Report	75 pages
	"B" - Seismic Evaluation for the Condensers	15 pages
	"C" - Seismic Verification of the Main Steam Piping and Supports Associated with the MSIV Alternate Leakage Treatment Pathway	29 pages
	"D" - MSIV Seismic Evaluation Report Application to BFN Unit 1 MSIV Seismic Ruggedness Verification Program	3 pages

R1

2

THIS PAGE REPLACED BY REV 1

SECTION 1.0: PURPOSE

The purpose of this calculation is to document the "Browns Ferry Nuclear Plant - Increased MSIV Leakage Tech Spec Change Submittal Seismic Evaluation Report", (200918-R-002); August 1999, By EQE International, Oakland, CA. Additionally, Bounding Calculations (200918-C-002) "Seismic evaluation for the Condensers" and (200918-C-001) "Seismic verification of the main steam drain piping and supports associated with the MSIV alternate leakage treatment pathway" are contained within this calculation.

SECTION 2.0: ASSUMPTIONS:

There are no unverified assumptions in this calculation.

SECTION 3.0: REQUIREMENTS/LIMITING CONDITION:

This calculation does not generate any requirements or limiting conditions which limit system or plant operation from that currently documented in the design, place special requirements on a safety evaluation, or place special requirements on the physical configuration that are generally outside the stated purpose of the calculation.

SECTION 4.0 REFERENCES:

See Attachment A, Section 5.; Attachment B, Section 3.0 And Attachment C, Section 3.0 for references used by EQE. See also Section D.3 of Attachment D. 2

SECTION 5.0 DESIGN INPUT DATA:

See Attachment A, B, And C, design input data is identified where it has been used. See also applicable sections of the references listed in Attachment D. 2

SECTION 6.0 SUPPORTING GRAPHICS:

See Attachment A, sheet 5 TABLES and FIGURES; Attachment B, sheet 2 TABLES and FIGURES, and Attachment C, sheet 2 TABLES and FIGURES for graphics used by EQE. See also applicable tables and figures of the references listed in Attachment D. 2

SECTION 7.0 COMPUTATIONS AND ANALYSIS:

See Attachment A, Section 5. for computations and analysis performed by EQE See also applicable sections of the references listed in Attachment D. 2

SECTION 8.0 SUMMARY:

See Attachment A, Section 4.1.3, Attachment B, Section 5.0 and Attachment C, Section 5.0. See also applicable sections of the references listed in Attachment D 2

SECTION 9.0 ATTACHMENTS:

Attachment A, "Browns Ferry Nuclear Plant - Increased MSIV Leakage Tech Spec Change Submittal Seismic Evaluation Report", (200918-R-002); August 1999, By EQE International, Oakland, CA.

Attachment B, Bounding Calculation (200918-C-002) "Seismic evaluation for the Condensers"; August 1999, By EQE International, Oakland, CA.

Attachment C, Bounding Calculation (200918-C-001) "Seismic verification of the main steam drain piping and supports associated with the MSIV alternate leakage treatment pathway"; August 1999, By EQE International, Oakland, CA.

Attachment D, MSIV Seismic Evaluation Report Application to BFN Unit 1 MSIV Seismic Ruggedness Verification Program. 2

EQE INTERNATIONAL

Browns Ferry Nuclear Plant Increased MSIV Leakage Tech Spec Change Submittal

Seismic Evaluation Report

Prepared for:

TENNESSEE VALLEY AUTHORITY

EQE Job Number: 50147.16 & 200918.01

August 1999

APPROVAL COVER SHEET

Title:	Browns Ferry Nuclear Plant Increased MSIV Leakage Tech Spec Change Submittal – Seismic Evaluation Report
Report Number:	200918-R-002
Client:	Tennessee Valley Authority
Project Number:	200918.01

Revision Number	Approval Date	Prepared	Reviewed	Approved
0	8/31/99	J.O. Dizon	S.R. [illegible]	J.O. Dizon

TABLE OF REVISIONS		
Revision No.	Description of Revision	Date
0	Initial Issue	August 31, 1999

TABLE OF CONTENTS

Page

1. INTRODUCTION 8
2. SEISMIC EXPERIENCE DATABASE COMPARISONS 9
   - 2.1 Seismic Ground Motions 9
   - 2.2 Piping, Equipment, and Other Plant Features 11
3. SEISMIC VERIFICATION WALKDOWNS 24
   - 3.1 Seismic Verification Review Guidelines 24
     - 3.1.1 Piping, Pipe Support and Equipment Design Attributes 25
     - 3.1.2 Seismic Anchor Movement Issues 26
     - 3.1.3 Seismic Interaction Issues (II/I and Proximity) 26
     - 3.1.4 Valve Design Attributes 26
   - 3.2 Seismic Verification Boundary 26
   - 3.3 Walkdown Results 28
     - 3.3.1 Unit 3 Seismic Walkdown 28
     - 3.3.2 Unit 2 Seismic Walkdown 29
     - 3.3.3 Additional Seismic Walkdown 30
4. SEISMIC ASSESSMENTS 41
   - 4.1 Outlier Resolution 41
     - 4.1.1 Seismic Demand 41
     - 4.1.2 Seismic Capacity 42
     - 4.1.3 Summary of Results 42
   - 4.2 Alternate Leakage Treatment Piping and Supports 43
   - 4.3 Turbine Building 44
   - 4.4 Condenser 46
5. REFERENCES 75

TABLES

		Page
3-1	Browns Ferry MSIV Leakage Boundary Flow Diagrams	32
3-2	BFN MSIV Leakage Boundary Points	33
3-3	Browns Ferry Unit 3 MSIV Walkdown Outliers	36
3-4	Browns Ferry Unit 2 MSIV Walkdown Outliers	38
4-1	Browns Ferry Unit 2 MSIV Outliers Resolution Summary	48
4-2	Browns Ferry Unit 3 MSIV Outliers Resolution Summary	50
4-3	Design Basis for Browns Ferry ALT Related Piping and Supports	53
4-4	Seismic Experience Database Piping Data	56
4-5	Comparison of Browns Ferry and Selected Database Piping Parameter	62
4-6	Bounding Evaluation of Typical Support Configurations	63
4-7	Browns Ferry Turbine Building Design Basis	64
4-8	Comparison of Browns Ferry and Selected Database Condensers	65

FIGURES

2-1	Comparison of Browns Ferry DBE Ground Spectrum and Selected Database Site Spectra	13
2-2	Comparison of Browns Ferry DBE and Valley Steam Plant Ground Spectra	14
2-3	Comparison of Browns Ferry DBE and Burbank Power Plant Ground Spectra	15
2-4	Comparison of Browns Ferry DBE and El Centro Steam Plant Ground Spectra	16
2-5	Comparison of Browns Ferry DBE and Moss Landing Power Plant Ground Spectra	17

FIGURES (CONT.)

		Page
2-6	Comparison of Browns Ferry DBE and Humboldt Bay Nuclear Power Plant Ground Spectra	18
2-7	Comparison of Browns Ferry DBE and Coolwater Power Plant Ground Spectra	19
2-8	Comparison of Browns Ferry DBE and Commerce Refuge to Energy Plant Ground Spectra	20
2-9	Comparison of Browns Ferry DBE and Grayson Power Plant Ground Spectra	21
2-10	Comparison of Browns Ferry DBE and Ormond Beach Power Plant Ground Spectra	22
2-11	Comparison of Browns Ferry DBE and PALCO Cogeneration Plant Ground Spectra	23
3-1	Browns Ferry MSIV Seismic Verification Boundary	40
4-1	Comparison of Browns Ferry and Selected Database Piping D/t Ratios	67
4-2	Size Comparison of Browns Ferry Condenser with Selected Database Condensers	68
4-3	Weight Comparison of Browns Ferry Condenser with Selected Database Condensers	69
4-4	Height Comparison of Browns Ferry Condenser with Selected Database Condensers	70
4-5	Plan Dimension Comparison of Browns Ferry Condenser with Selected Database Condensers	71
4-6	Schematic Plan View of Browns Ferry Condenser Anchorage	72

FIGURES (CONT.)

Page

4-7 Comparison of Browns Ferry and Selected Database Condenser Anchorage to Seismic Demand for Direction Parallel to the Turbine Generator Axis 73

4-8 Comparison of Browns Ferry and Selected Database Condenser Anchorage to Seismic Demand for Direction Transverse to the Turbine Generator Axis 74

1. INTRODUCTION

This report summarizes the engineering activities performed for the supplemental plant specific Main Steam piping seismic verification to support the increased Main Steam Isolation Valve (MSIV) leakage tech spec change at Browns Ferry Nuclear Plant (BFN). The verification program was performed in accordance with the recommendations of the General Electric Boiling Water Reactor Owners Group (BWROG) Report for Increasing MSIV Leakage Rate Limits and Elimination of Leakage Control Systems (Reference 1). The U.S. Nuclear Regulatory Commission (NRC) has reviewed the BWROG report and issued a safety evaluation report (SER) on its application for addressing the MSIV leakage issues (Reference 2), subject to certain limitations.

Engineering activities associated with the supplemental plant specific seismic verification program, as recommended in the BWROG report, consist of the following key elements:

- Seismic Experience Database Comparisons
- Seismic Verification Walkdowns
- Seismic Assessments of Selected Components

Detailed discussions of each of these activities are presented in the following sections of the report.

2. SEISMIC EXPERIENCE DATABASE COMPARISONS

The seismic experience data are derived from an extensive database on the performance of power plants and industrial facilities in past strong-motion earthquakes. These performance data are compiled by EQE for the Seismic Qualification Utility Group, the Electric Power Research Institute and others, and included over 100 facilities in more than 60 earthquakes that have occurred around the world from 1934 to present. Of interest to the MSIV leakage issues are the performance of the non-seismically analyzed main steam system piping, related components and supports, and condensers.

The BWROG Report (Reference 1) summarizes data on the performance of main steam piping and condensers in past strong-motion earthquakes and compares these piping and condensers with those in typical U.S. GE Mark I, II, and III nuclear plants. The earthquake experience data and similarity comparisons are then used to draw conclusions on how the GE piping and condensers would perform in a design basis earthquake (DBE).

The following sections present experience database comparisons that are plant-specific to Browns Ferry Nuclear Plant for use to support the increased MSIV leakage tech spec change submittal.

2.1 SEISMIC GROUND MOTIONS

Ground motion estimates of 13 database sites were reviewed and accepted by the NRC staff for inclusion in the BWROG's earthquake experience database, and are presented in the referenced NRC Safety Evaluation Report (SER, Reference 2). To establish applicability of the BWROG's earthquake experience-based methodology for demonstrating the seismic ruggedness of non-seismically analyzed main steam piping and associated components at Browns Ferry, comparisons of the ground response spectra of selected database facilities with BFN design basis ground spectrum were made.

The majority of the MSIV alternate leakage treatment (ALT) path and associated piping systems and the condensers at Browns Ferry are located in the lower elevations of the Turbine Building. BFN Turbine Building is classified as a Class II structure, hence, no dynamic analysis of the building was performed. The building below the operating floor is a reinforced concrete framed structure supported on steel H-piles to bedrock. The horizontal ground spectrum is conservatively taken as the BFN 5% damped design basis DBE input spectrum (0.2g Housner spectrum defined at rock outcrop) and scaled by 1.6 to account for soil amplification.

A composite comparison of the ground response spectra of selected earthquake experience database facilities with the Browns Ferry design basis DBE ground spectrum is shown in Figure 2-1. The selected ground motions include the following 10 sites from among the 13 database facilities reviewed and accepted by the NRC:

- Valley Steam Plant - USGS estimate
  1971 San Fernando Earthquake (M6.6)
- Burbank Power Plant - USGS estimate
  1971 San Fernando Earthquake (M6.6)
- El Centro Steam Plant - E/W direction
  1979 Imperial Valley Earthquake (M6.6)
- Moss Landing Power Plant - PG&E estimate
  1989 Loma Prieta Earthquake (M7.1)
- Humboldt Bay Nuclear Power Plant - Average
  1975 Ferndale Earthquake (M5.5)
- Coolwater Power Plant - Longitudinal direction
  1992 Landers Earthquake (M7.3)
- Commerce Refuge to Energy Plant (LA Bulk Mail) - N/S direction
  1987 Whittier Narrows Earthquake (M5.9)
- Grayson Power Plant (Glendale) - N200E direction
  1971 San Fernando Earthquake (M6.6)
- Ormond Beach Power Plant - N270E direction
  1973 Point Mugu Earthquake (M5.8)

- PALCO Cogeneration Plant (Rio Dell) – Average
  1992 Petrolia Earthquake (M6.9)

The individual comparison plots of the 5% damped ground spectra of the above 10 database facilities with the Browns Ferry DBE ground spectrum are shown in Figures 2-2 to 2-11. In general, the earthquake experience database sites have experienced strong ground motions that are in excess of the Browns Ferry DBE at the frequency range of interest (i.e., about 1 Hz. and above), with the exception of the Ormond Beach site. Many of the database site ground motions envelope the conservatively estimated BFN DBE ground spectrum by large factors in various frequency bands within the 1 Hz. and above range.

Based on the above observations and comparison, it is concluded that the Browns Ferry DBE ground spectrum is generally bounded by those of the earthquake experience database sites at the frequencies of interest. Hence, the use of earthquake experience-based approach for demonstrating the seismic ruggedness of non-seismically analyzed main steam piping and associated components at Browns Ferry, consistent with the BWROG's recommendations and limitations of the SER, is appropriate.

2.2 PIPING, EQUIPMENT AND OTHER PLANT FEATURES

The main steam piping and condensers in the earthquake experience database exhibited substantial seismic ruggedness, even when they are typically not designed to resist earthquakes. This is a common conclusion in studies of this type on other plant items such as welded steel piping in general, anchored equipment such as motor control centers, pumps, valves, structures, and so forth. That is, with limited exceptions, normal industrial construction and equipment typically have substantial inherent seismic ruggedness, even when they are not designed for earthquakes. No failures of the main steam piping were found. Anchored condensers have also performed well in past earthquakes with damage limited to minor internal tube leakage.

The BWROG Report (Reference 1) contains detailed discussions and comparisons of main steam piping and condenser design in several earthquake experience database

sites and example GE Mark I, II, and III plants in the U.S. The general conclusions of these comparisons are as follows:

- GE plant designs are similar to or more rugged than those in the earthquake experience database that exhibited good earthquake performance;
- The possibility of significant failure in GE BWR main steam piping or condensers in the event of an eastern U.S. design basis earthquake is highly unlikely; and that
- Any such failure would also be contrary to a large body of historical earthquake experience data, and thus unprecedented.

Plant-specific comparisons of the main steam piping, related components and supports, and condensers at Browns Ferry with those in the selected earthquake experience database facilities are provided in Section 4 of this report.

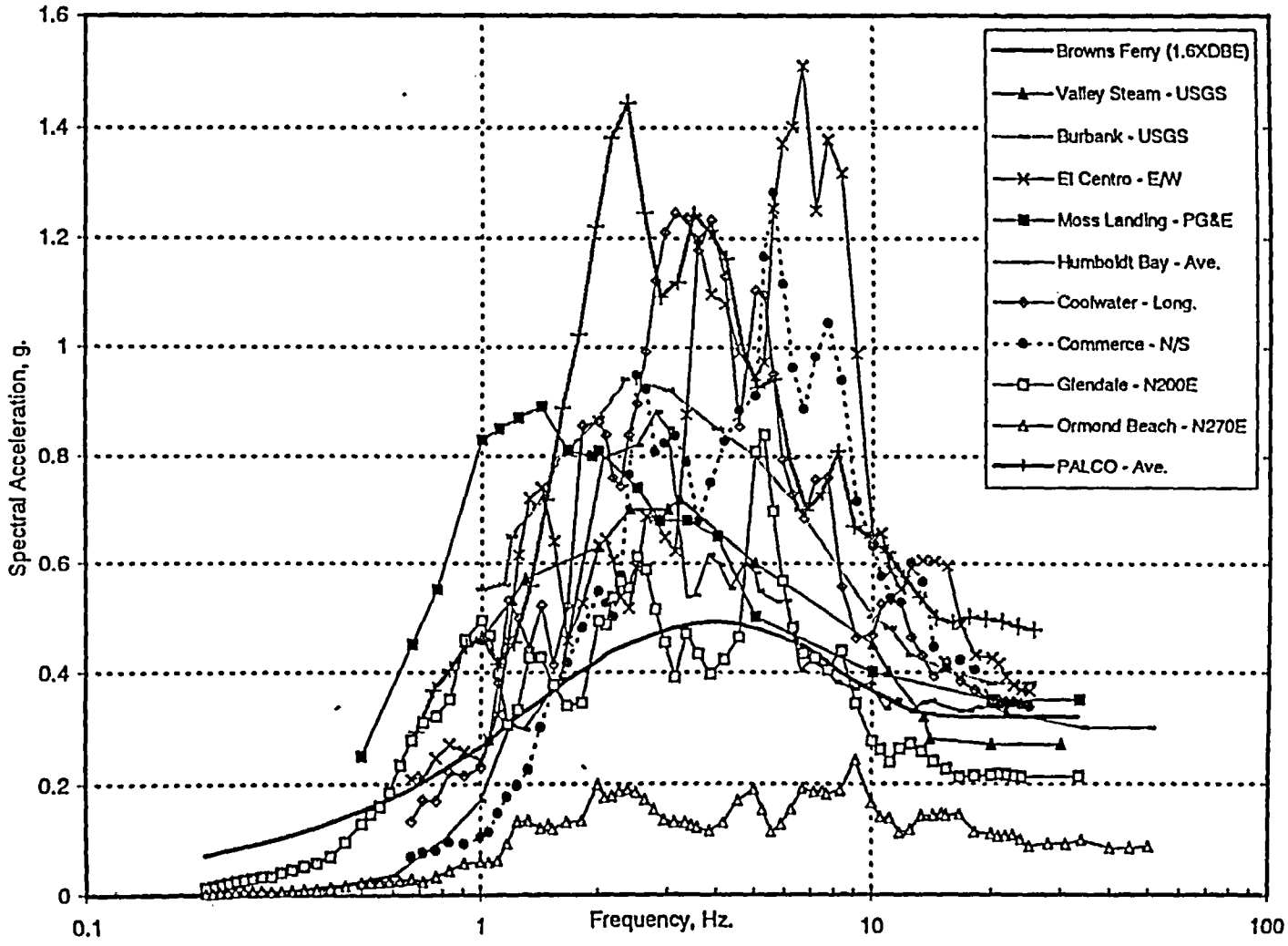

Figure 2-1 Comparison of Browns Ferry DBE Ground Spectrum and Selected Database Site Spectra

CD-N0001-990113 Page A13
Attachment A

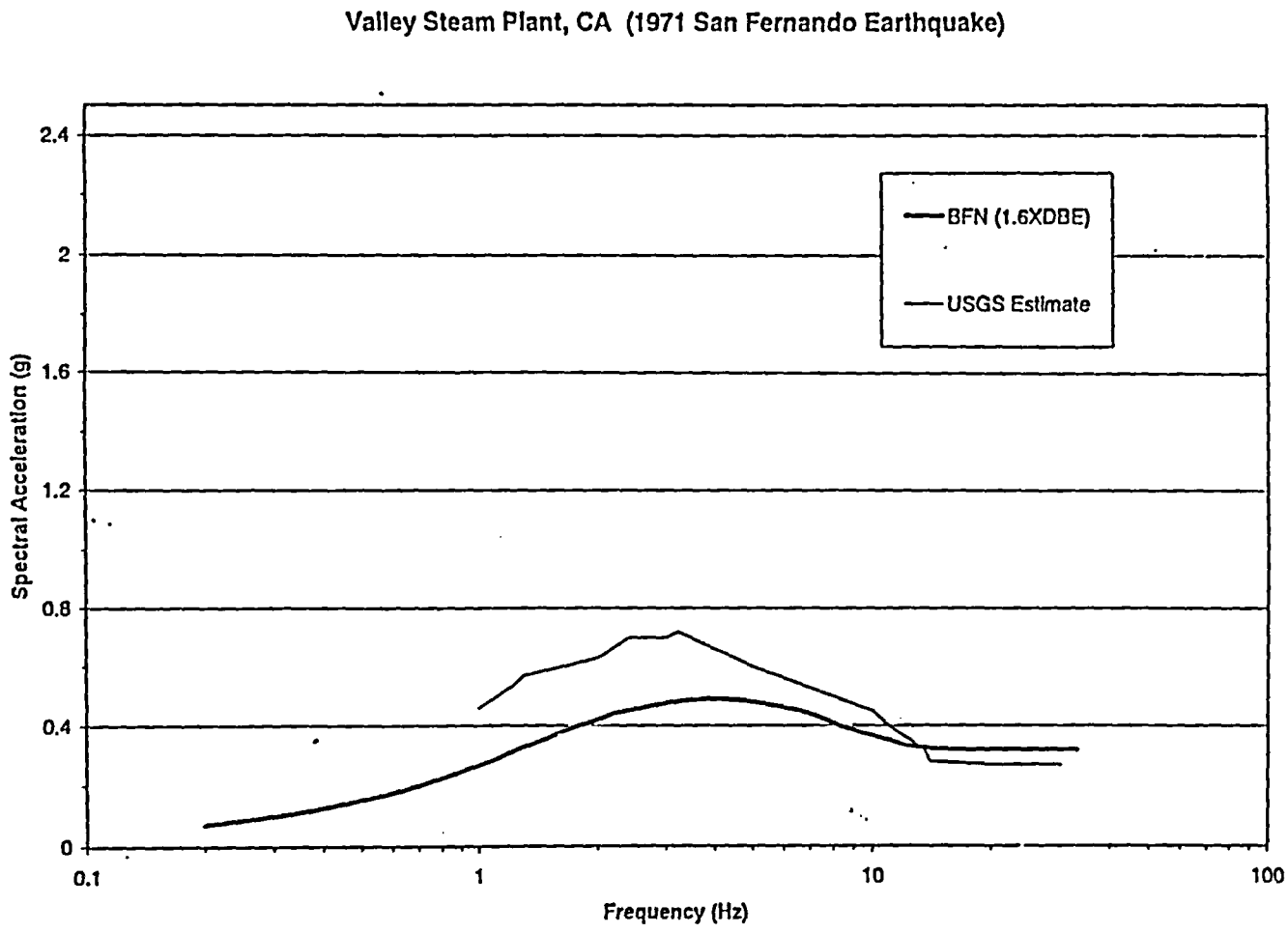

Figure 2-2 Comparison of Browns Ferry DBE and Valley Steam Plant Ground Spectra

CD-N0001-990113 Page A14
Attachment B

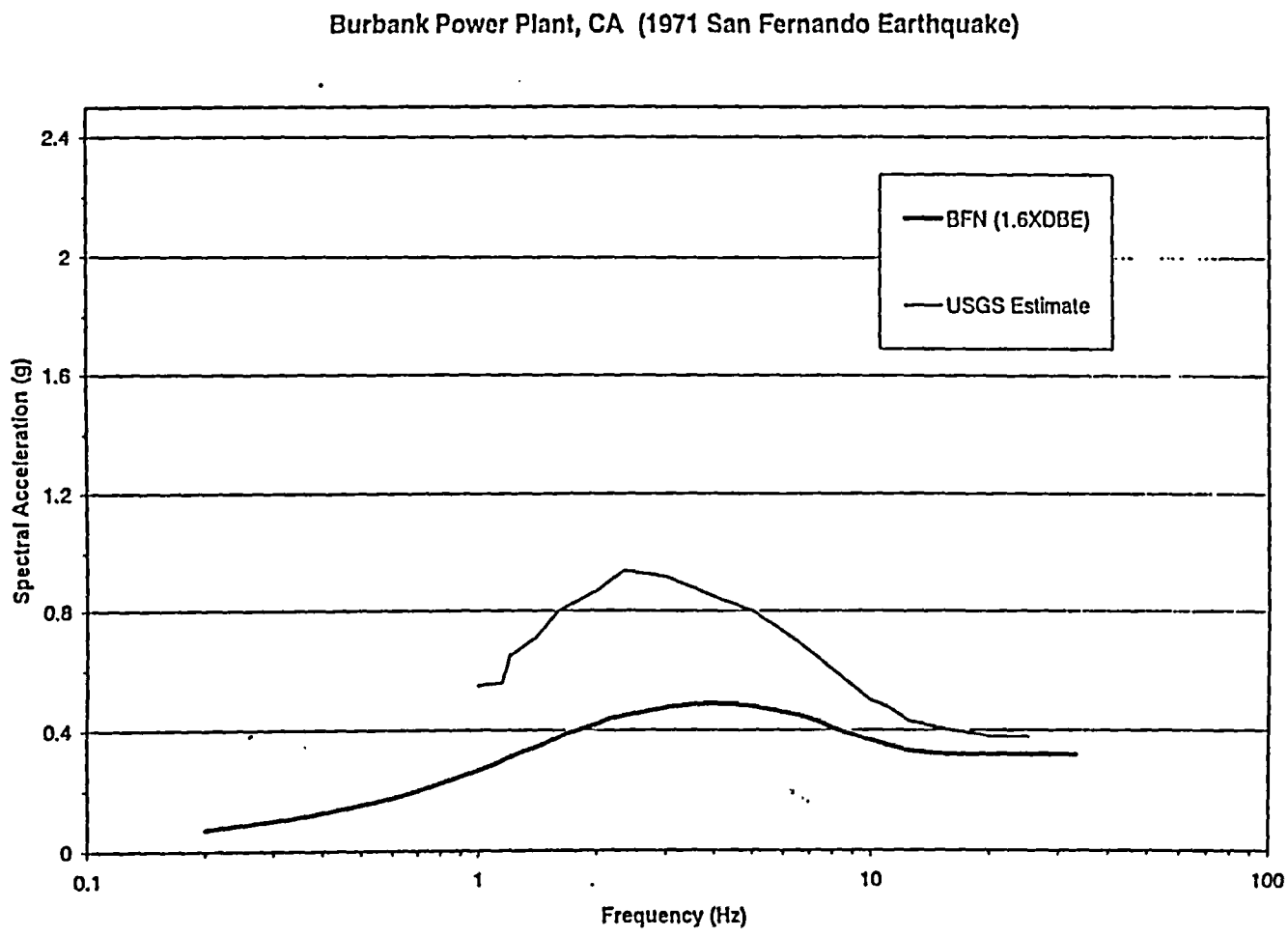

Figure 2-3 Comparison of Browns Ferry DBE and Burbank Power Plant Ground Spectra

CD-N0001-990113 Page A15
Attachment A

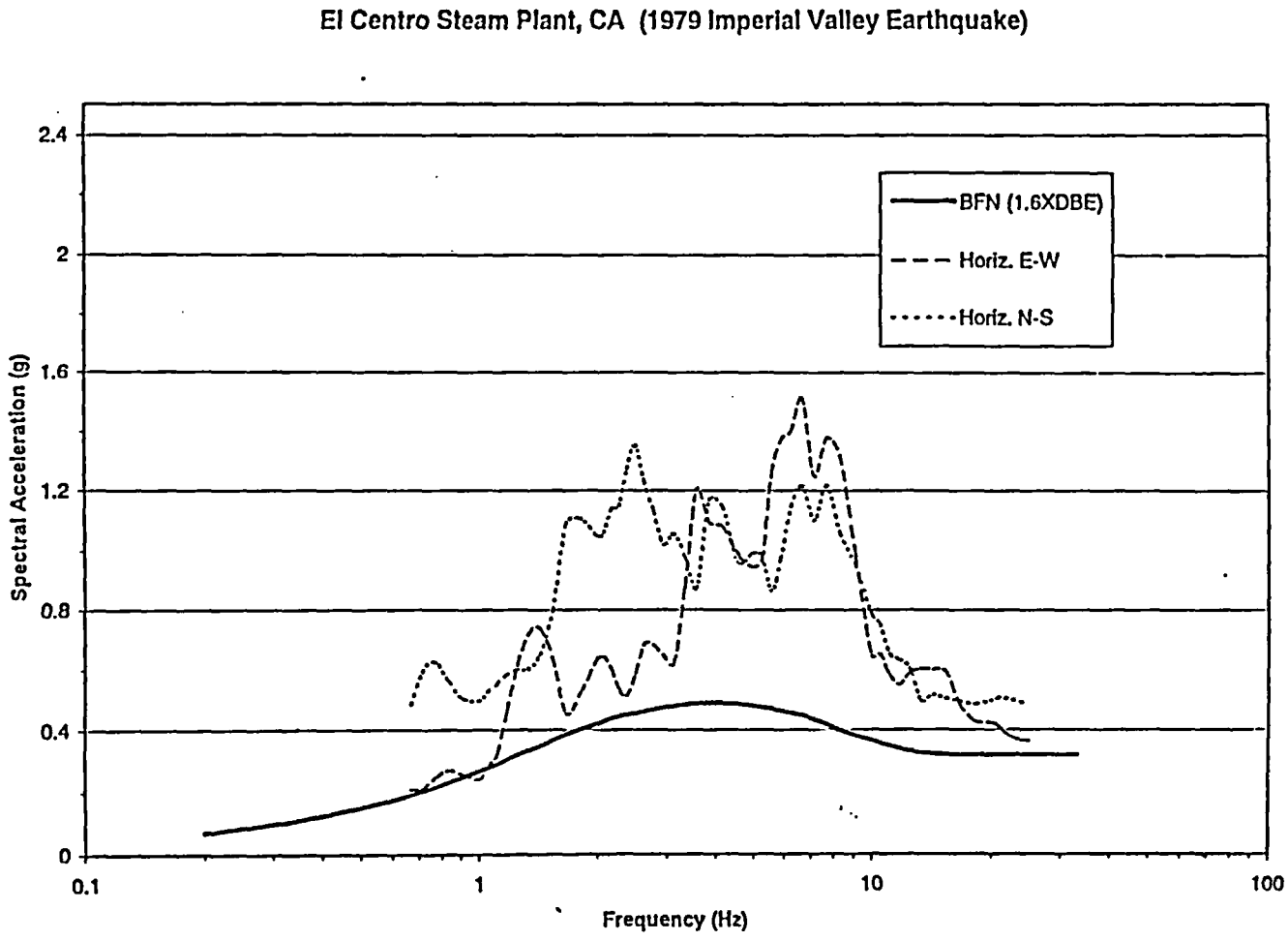

Figure 2-4 Comparison of Browns Ferry DBE and El Centro Steam Plant Ground Spectra

CD-N0001-990113 Page A16
Attachment A

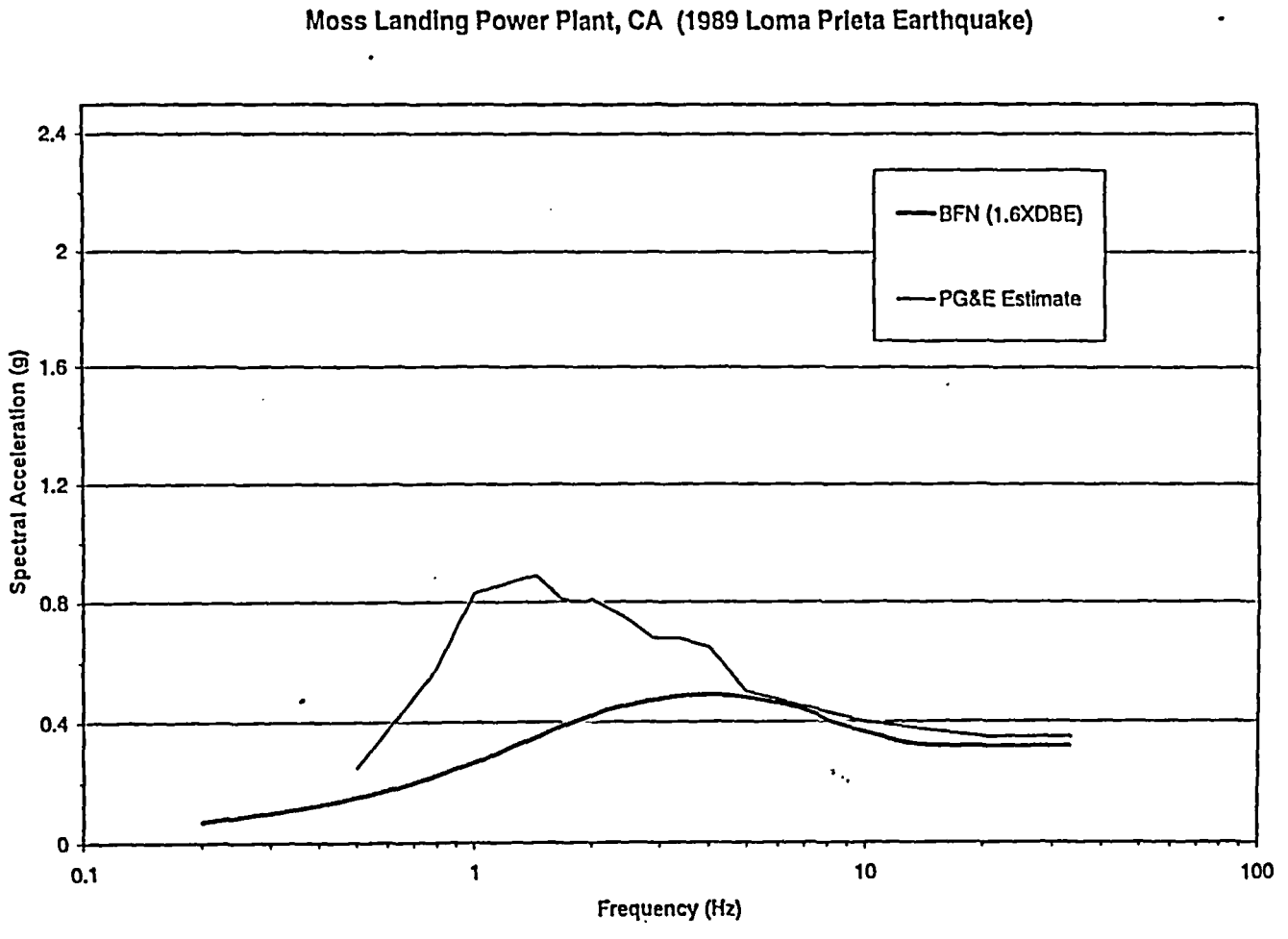

Figure 2-5 Comparison of Browns Ferry DBE and Moss Landing Power Plant Ground Spectra

CD-N0001-990113 Page A17
Attachment B

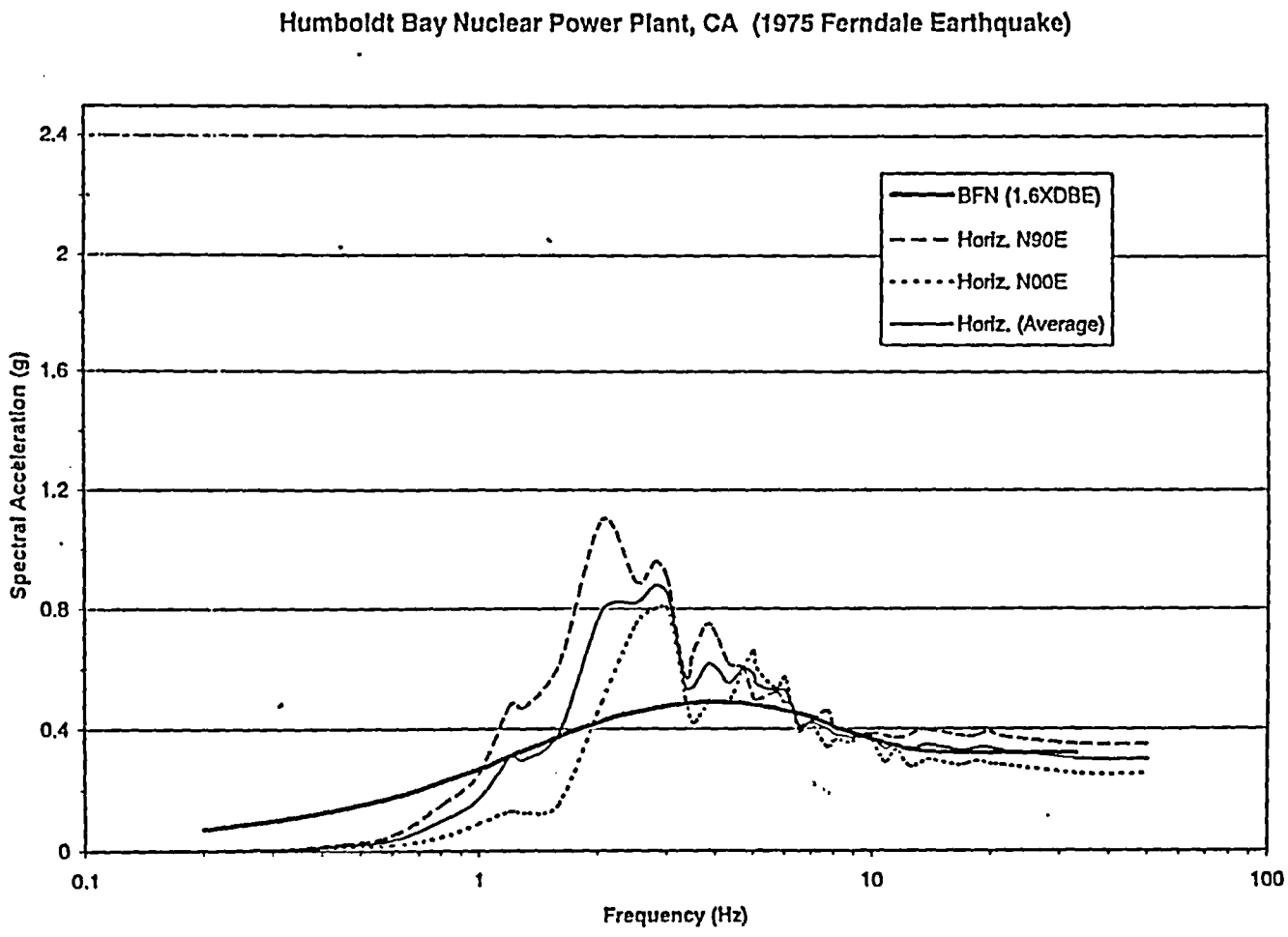

Figure 2-6 Comparison of Browns Ferry DBE and Humboldt Bay Nuclear Power Plant Ground Spectra

CD-N0001-990113 Page A18
Attachment A

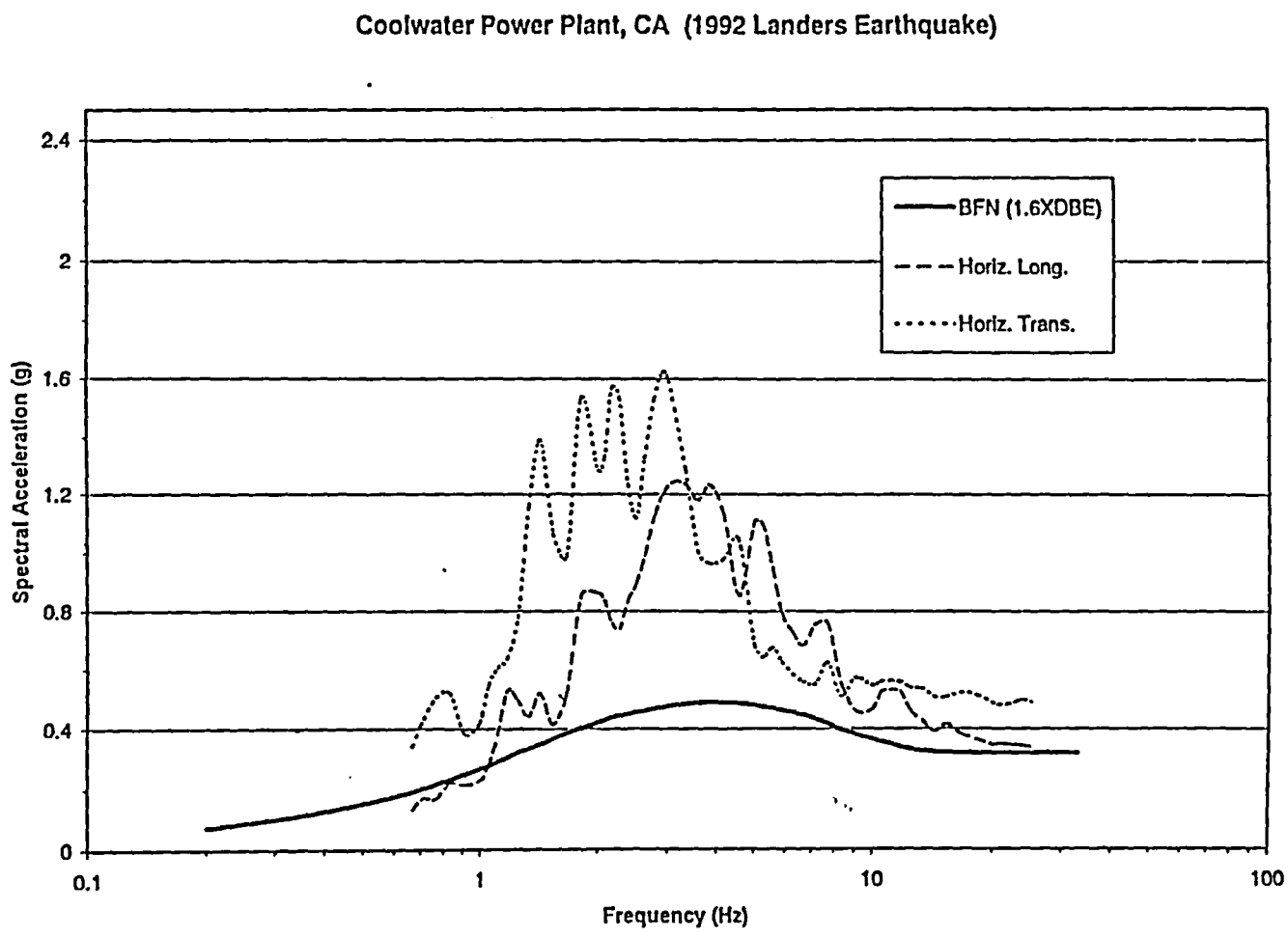

Figure 2-7 Comparison of Browns Ferry DBE and Coolwater Power Plant Ground Spectra

CD-N0001-990113 Page A19
Attachment A

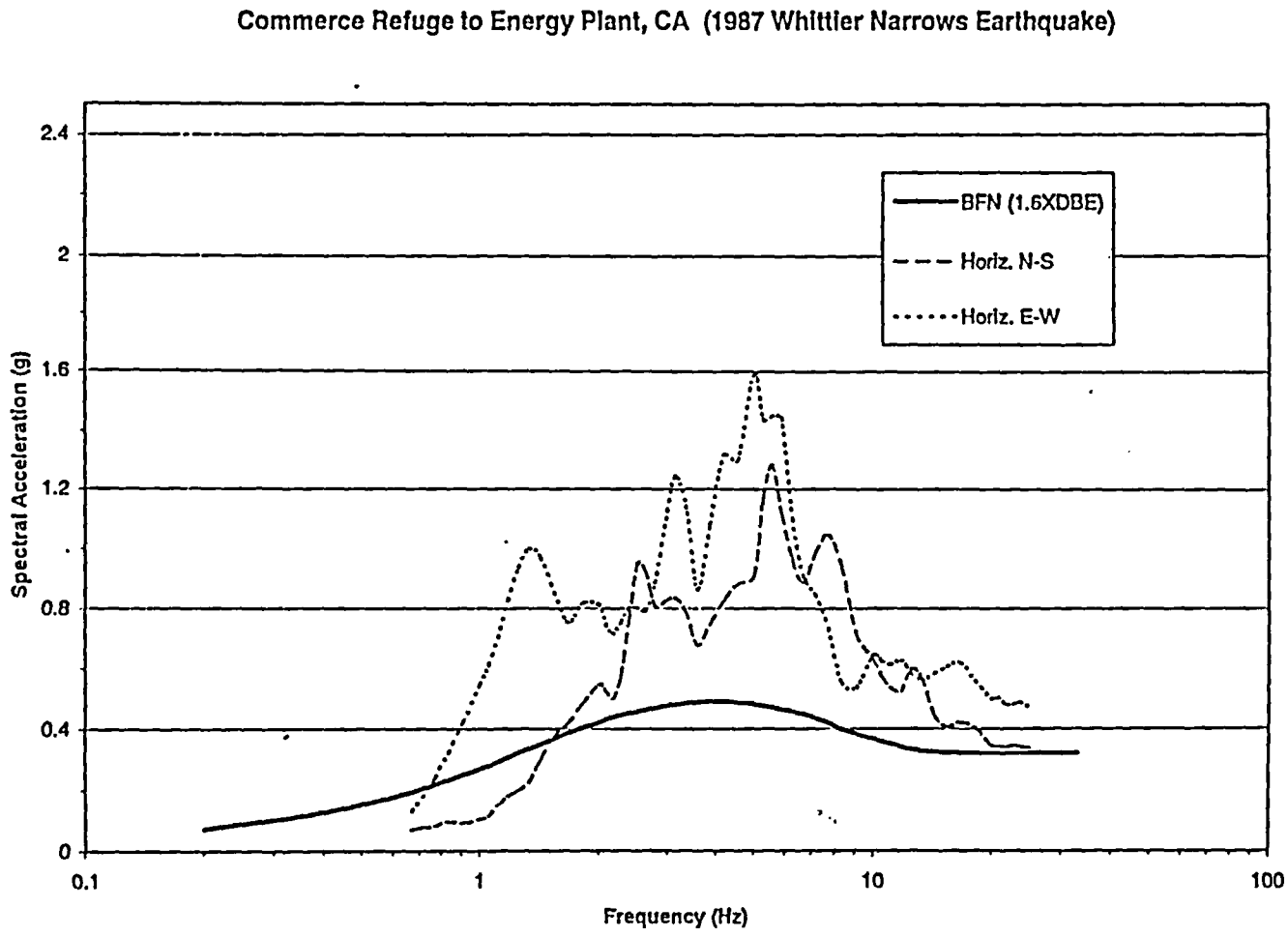

Figure 2-8 Comparison of Browns Ferry DBE and Commerce Refuge to Energy Plant Ground Spectra

CD-N0001-990113 Page A26
Attachment A

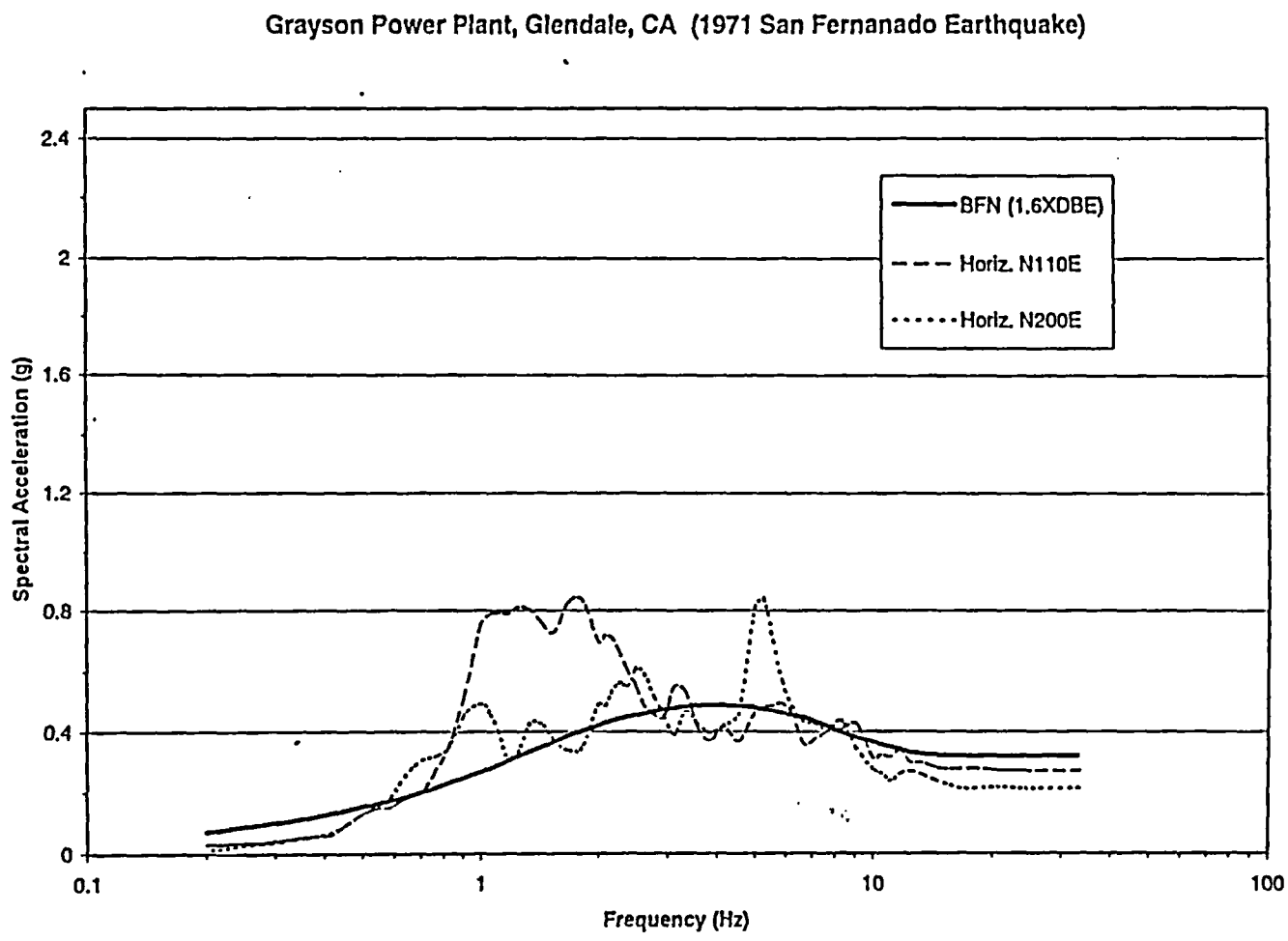

Figure 2-9 Comparison of Browns Ferry DBE and Grayson Power Plant Ground Spectra

CD-N0001-990113 Page A21
Attachment A

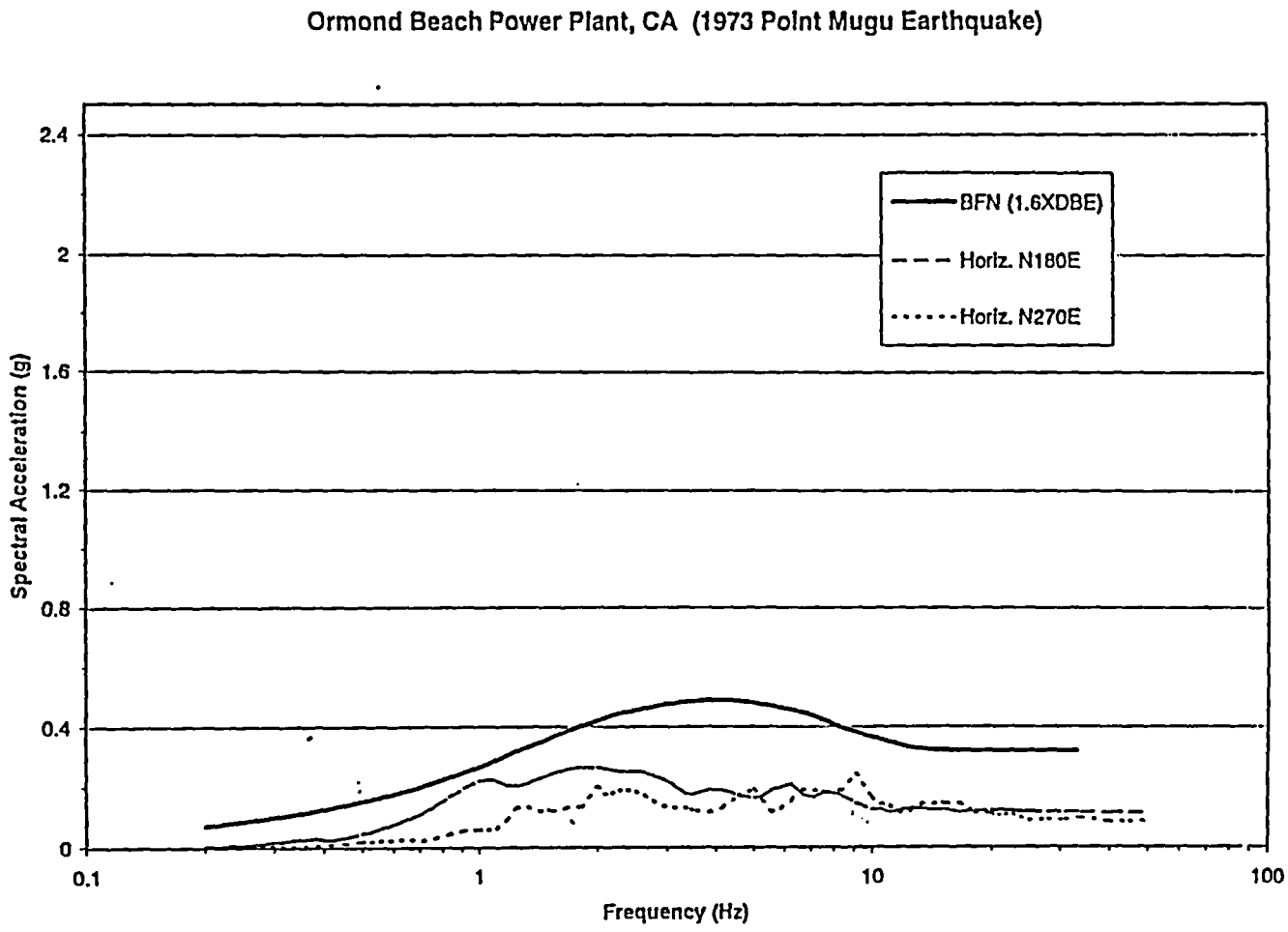

Figure 2-10 Comparison of Browns Ferry DBE and Ormond Beach Power Plant Ground Spectra

CD-N0001-990113 Page A22
Attachment A

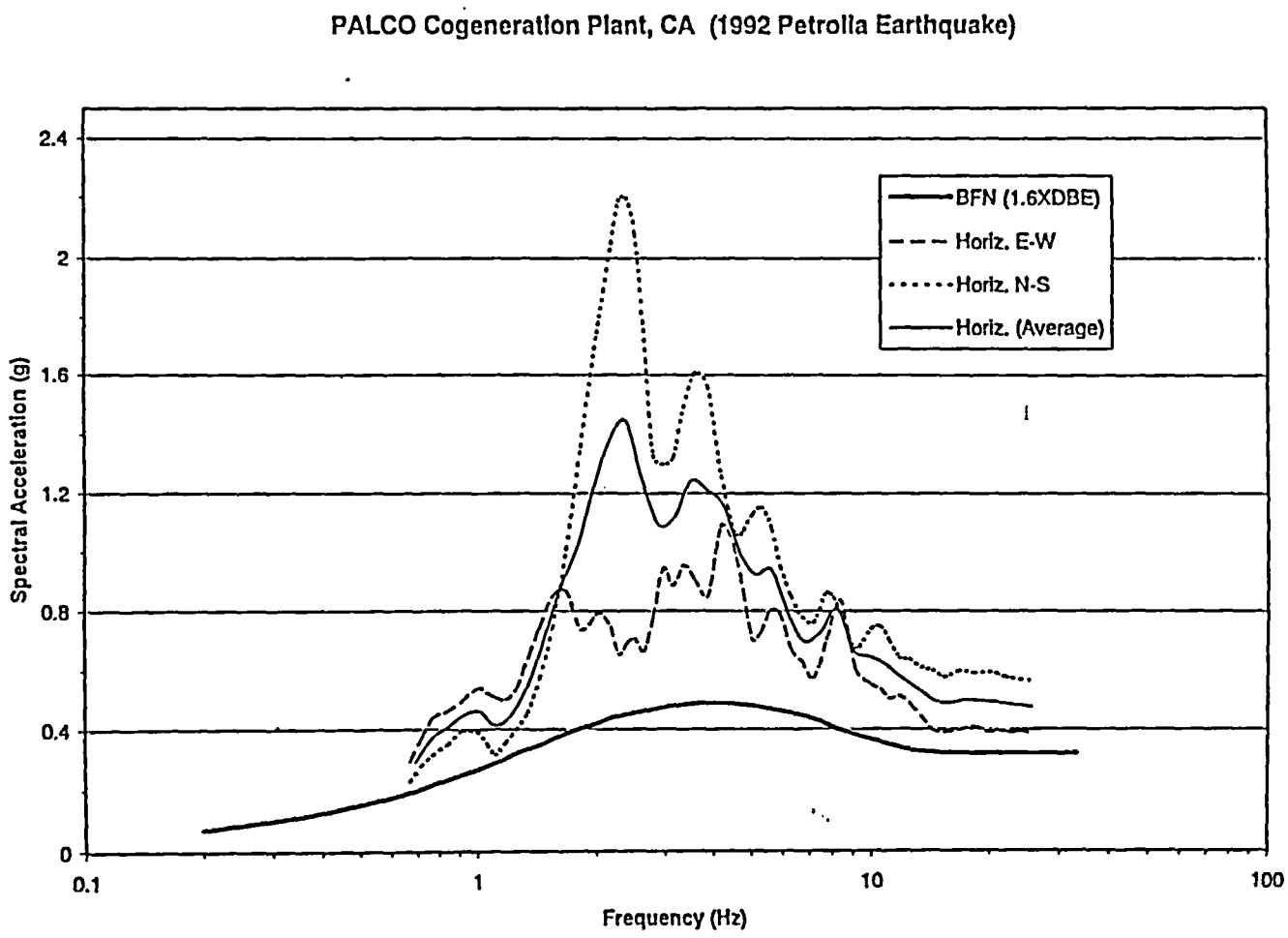

Figure 2-11 Comparison of Browns Ferry DBE and PALCO Cogeneration Plant Ground Spectra

CD-N0001-990113 Page A23
Attachment A

3. SEISMIC VERIFICATION WALKDOWNS

Very few components of nuclear plant systems are unique to the nuclear facilities. Nuclear plant systems include equipment, piping, tubing, conduit, and many other items that are common components of conventional power plants and industrial facilities. Seismic experience data based methods have been developed to address seismic issues associated with the adequate performance of these equipment and commodities not designed, procured and installed to current nuclear seismic criteria. By reviewing the performance of the database facilities that contain equipment similar to that found in nuclear plants, conclusions can be drawn about the performance of nuclear plant equipment during and after earthquake events.

Extensive work has been performed documenting the performance of power plant equipment performance and the common sources of seismic damage to equipment and piping. In general, equipment, piping and tubing systems in the seismic experience database have performed very well in earthquakes, even though they were typically designed for deadweight and operating loads only, with little or no consideration for seismic loads. Performance of piping and equipment in past earthquakes are summarized in Appendix D of the BWROG Report (Reference 1). Earthquake experience-based methods provide the basis for the seismic review of the main steam piping and equipment within the MSIV alternate leakage treatment (ALT) boundary at BFN.

3.1 SEISMIC VERIFICATION REVIEW GUIDELINES

Various design attributes of the as-installed scope of equipment, piping, and tubing were reviewed and evaluated by the Seismic Walkdown Teams to ensure that the BFN installations are representative of database design practice and that components are free of known seismic vulnerabilities. Earthquake experience has identified conditions that have resulted in failure of piping and tubing systems and components. The conditions evaluated in the walkdown reviews included:

- Piping, Pipe Support and Equipment Design Attributes
- Seismic Anchor Movement Issues
- Seismic Interaction Issues (II/I & Proximity)
- Valve Design Attributes

The above design attributes and conditions are briefly discussed below.

3.1.1 Piping, Pipe Support and Equipment Design Attributes

The Seismic Walkdown reviewed the piping and tubing systems, and associated supports to ensure that the design attributes and conditions are consistent with good design and industry standard practices. The systems were also screened to ensure that they are free from known seismic vulnerabilities identified from earthquake experience data. These design attributes include:

- Piping with dead weight support spacing greatly in excess of the B31.1 suggested spans, or tubing with excessive sagging.
- Heavy, unsupported in-line components.
- Piping constructed of non-ductile materials such as cast iron or PVC.
- Non-standard fittings or unusual attachments that could cause excessive localized stresses.
- Pipe supports that exhibit non-ductile behavior.
- Presence of severe corrosion.

In addition, anchorage of terminal equipment to piping and tubing systems were reviewed for adequacy.

3.1.2 Seismic Anchor Movement Issues

The experience database includes instances of seismic damage to piping, tubing and supports that were attributed to seismic anchor movement. Damage was the result of excessive movement of terminal end equipment, differential movement between supports in adjacent buildings, and excessive movements imposed on branch lines by flexible headers. These attributes were evaluated during the piping walkdowns.

3.1.3 Seismic Interaction Issues (II/I and Proximity)

The seismic interaction review was a visual inspection of structures, piping, or equipment adjacent to the components under evaluation. The seismic interaction review evaluated conditions where seismically induced failures (II/I) and displacements of adjacent structures, piping, or equipment (proximity) could adversely affect the required seismic performance of the system and components under consideration.

3.1.4 Valve Design Attributes

Screening guidelines are provided for valves that are relied upon to establish the ALT pathway or are part of the Seismic Verification Boundary. The guidelines are consistent with the SQUG Generic Implementation Procedure (GIP, Reference 5) and include provisions for air-operated diaphragm valves, spring-operated pressure relief valves, piston-operated valves of light-weight construction, motor-operated valves, and substantial piston-operated valves.

3.2 SEISMIC VERIFICATION BOUNDARY

The walkdown scope included the Main Steam drain path that will be established to convey leakage past the outboard Main Steam Isolation Valves (MSIV) to the isolated condenser and includes piping, instrumentation, valves and equipment that would be required to maintain the drain pathway.

The Seismic Verification Boundary for the MSIV Alternate Leakage Treatment path was developed in consultation with TVA Browns Ferry Systems Engineering, and is shown in

Figure 3-1. The associated flow diagrams are listed on Table 3-1, and the piping isolation boundaries defining the seismic verification boundary are shown on Table 3-2. The Seismic Verification Boundary generally consists of the following portions of the Main Steam (MS) system beyond the outboard MSIV's:

1. Main Steam drain path to the condenser for any leakage past the isolated outboard MSIVs.
2. Main Steam piping from the outboard MSIV to the Main Steam Stop Valves (MSV).
3. Main Steam Bypass piping from the Main Steam lines to the Bypass Valve chest.
4. Main Condensers.
5. Additional piping and instrumentation within the Seismic Verification Boundary includes:
   - Stop Valve Above Seat Drains to Condenser
   - Steam Sample System
   - HPCI/RCIC Steam Drains to Main Steam
   - Auxiliary Boiler Drains to Main Steam
   - Main Steam Instrumentation
   - Main Steam Supply to the Reactor Feed Pumps
   - Main Steam Supply to the Steam Jet Air Ejectors
   - Main Steam Supply to the Off-Gas Preheaters

The above Seismic Verification Boundary was originally developed for Unit 3 seismic walkdown. The Unit 2 Seismic Verification Boundary was less than that shown above for Unit 3. The original Unit 2 boundary assumed the addition of an isolation valve to isolate the steam path to the RFP Turbines and that the steam feed shutoff valve 8-575 would be qualified as an isolation boundary to the Steam Seal system. The Unit 2 Seismic Verification Boundary will be expanded and additional walkdown will be performed during the Unit 2 Cycle 11 outage to remove the assumptions of the isolation valves noted above, hence, eliminating the unit differences with Unit 3 Seismic Verification Boundary.

3.3 WALKDOWN RESULTS

Field walkdowns of the main steam lines, ALT drain path and associated appendages within the Seismic Verification Boundary were conducted during the Unit 3 recovery outage in April 1995, and during the Unit 2 refueling outage in April 1996 by EQE engineers. Plant specific guidance, systems expertise and support were provided by BFN Site Engineering staff. All members of the MSIV Seismic Verification Walkdown Teams are degreed engineers, have ten to twenty years of experience in structural engineering and/or earthquake engineering application to nuclear power plants, and are familiar with the earthquake experience methodology. EQE engineers have performed the complete MSIV Seismic Verification Walkdowns in accordance with the recommendations of the GE NEDC-31858P (BWROG Report, Reference 1) at several other plants.

Results of the Seismic Verification Walkdowns, including the identified walkdown open items or "Outliers", are discussed in detail in References 3 and 4 for Browns Ferry, Unit 3 and Unit 2, respectively. A brief summary of the walkdown results is presented below, with walkdown outliers summarized in Table 3-3 and 3-4 for Browns Ferry, Unit 3 and Unit 2, respectively.

3.3.1 Unit 3 Seismic Walkdown

The main steam drain piping included in the Unit 3 MSIV alternate leakage treatment (ALT) path to the condenser generally conform to ANSI B31.1 design guidelines. Piping are typically insulated, and constructed from carbon steel, SA-106 Grade B, with butt-welded or socket-welded joints. In addition, pipe supports consist of a combination of rigid struts and U-bolt brackets, floor-mounted stanchions, and spring or rod hangers. The as-installed configurations are inherently rugged and are similar to those found in the earthquake experience database facilities that have performed well during past earthquakes.

The piping systems within the Unit 3 MSIV Seismic Verification Boundary were divided into the following 13 portions for walkdown purposes:

1. Main Steam drain line in the Turbine Building
2. Main Steam lines in the Turbine Building
3. Main Steam and Main Steam drain lines in the Reactor Building MSIV vault
4. HPCI/RCIC/Auxiliary Boiler drains in the Reactor Building and above the Torus
5. Main Steam PT instrumentation lines
6. Main Steam sampling lines to the Sample Station
7. Main Steam bypass lines
8. Main Steam stop valve above seat drains
9. Steam supply to Steam Seal Regulators
10. Steam supply to RFP Turbines
11. Steam supply to Steam Jet Air Ejectors
12. Steam supply to Off-Gas Preheaters
13. Condensers

Conditions not meeting the Seismic Verification Review guidelines, as discussed in Section 3.1 of this report, were identified and documented as "Outliers" for further evaluation and resolution by the Seismic Walkdown Teams. These conditions included limited numbers of piping overspans, equipment anchorage or support integrity issues, proximity or falling interaction concerns, flexibility concerns due to seismic anchor movements or differential displacements, boundary valve integrity issues, and general maintenance or housekeeping items. Table 3-3 presents a summary of Unit 3 MSIV walkdown outliers.

3.3.2 Unit 2 Seismic Walkdown

Similar to Unit 3, the main steam drain piping included in the Unit 2 MSIV alternate leakage treatment (ALT) path to the condenser generally conform to ANSI B31.1 design guidelines. Piping are typically insulated, and constructed from carbon steel, SA-106 Grade B, with butt-welded or socket-welded joints. Pipe supports consist of a combination of rigid struts and U-bolt brackets, floor-mounted stanchions, and spring or rod hangers. The as-installed configurations are inherently rugged and are similar to those found in the earthquake experience database facilities that have performed well during past earthquakes.

The piping systems within the scope of the original Unit 2 MSIV Seismic Verification Walkdown Boundary were divided into the following 11 portions for walkdown purposes:

1. Main Steam drain line in the Turbine Building
2. Main Steam lines in the Turbine Building
3. Main Steam and Main Steam drain lines in the Reactor Building MSIV vault
4. HPCI/RCIC/Auxiliary Boiler drains in the Reactor Building and above the Torus
5. Main Steam PT instrumentation lines
6. Main Steam sampling lines to the Sample Station
7. Main Steam bypass lines
8. Main Steam stop valve above seat drains
9. Steam supply to Steam Feed valve 8-575 (proposed isolation boundary)
10. Steam supply to RFP Turbines (with proposed manual isolation valve to be located on the Turbine Building operating deck, El. 617')
13. Condensers

Conditions not meeting the Seismic Verification Review guidelines, as discussed in Section 3.1 of this report, were identified and documented as "Outliers" for further evaluation and resolution by the Seismic Walkdown Teams. As in the Unit 3 walkdown, these conditions included limited numbers of piping overspans, equipment anchorage or support integrity issues, proximity or falling interaction concerns, flexibility concerns due to seismic anchor movements or differential displacements, boundary valve integrity issues, and general maintenance or housekeeping items. Table 3-4 presents a summary of the Unit 2 MSIV walkdown outliers.

As mentioned in Section 3.2 above, the original Unit 2 Seismic Verification Boundary will be expanded and additional walkdown will be performed during the Unit 2 Cycle 11 outage to remove the assumptions of the isolation valves, hence, eliminating the unit differences with Unit 3 Seismic Verification Boundary.

3.3.3 Additional Seismic Walkdown

As mentioned in Section 3.2 above, the Unit 2 Seismic Verification Boundary will be expanded to include portions of the steam supply lines from the Main Steam Header to

the turbine drives for the Reactor Feed Pumps, the Steam Jet Air Ejectors, the Off-Gas Preheaters, and the Steam Seal Regulators, i.e., extension of piping portions 9 and 10, and portions 11 and 12, as in the Unit 3 walkdown scope. The resulting Unit 2 Seismic Verification Boundary will then be consistent with that of Unit 3, hence, eliminating any unit differences between them. Additional seismic verification walkdown for the expanded scope will be performed during the Unit 2 Cycle 11 outage to verify the seismic ruggedness of the MS piping and associated components, and all identified outliers will be resolved during the same outage. Design Change Notice (DCN) will address any physical changes to restore the drain path into compliance.

Table 3-1

BROWNS FERRY MSIV LEAKAGE BOUNDARY FLOW DIAGRAMS

Drawing Number	System Description
Unit 2	
2-47E801-1	Main Steam System
2-47E801-2	Main Steam System
2-47E805-3	Heater Drains & Vents and Miscellaneous Piping Systems
2-47E807-1	Turbine Drains and Miscellaneous Piping Systems
2-47E807-2	Turbine Drains and Miscellaneous Piping Systems
2-47E812-1	High Pressure Coolant Injection System
2-47E813-1	Reactor Core Isolation Cooling System
0-47E815-1 2-47E815-4	Auxiliary Boiler System
2-47E610-43-1	Sampling and Water Quality System
Unit 3	
3-47E801-1	Main Steam System
3-47E801-2	Main Steam System
3-47E805-3	Heater Drains & Vents and Miscellaneous Piping Systems
3-47E807-1	Turbine Drains and Miscellaneous Piping Systems
3-47E807-2	Turbine Drains and Miscellaneous Piping Systems
3-47E812-1	High Pressure Coolant Injection System
3-47E813-1	Reactor Core Isolation Cooling System
3-47E815-5	Auxiliary Boiler System
3-47E610-43-6	Sampling and Water Quality System

Table 3-2

BFN MSIV LEAKAGE BOUNDARY POINTS

Leakage Boundary Point *	Flow Diagram/ Drawing *	Comment
FCV-1-15	47E801-1	MSIV for Main Steam Line A
FCV-1-27	47E801-1	MSIV for Main Steam Line B
FCV-1-38	47E801-1	MSIV for Main Steam Line C
FCV-1-52	47E801-1	MSIV for Main Steam Line D
FCV-1-56	47E801-1	Outboard Containment Isolation valve for Primary Containment steam drains
1-521 1-527	47E801-1	Normally closed Main Steam Drain manual isolation valves
43-631	2-47E610-43-1 3-47E610-43-6	Normally closed Main Steam Sample System manual isolation valve
43-631A	2-47E610-43-1 3-47E610-43-6	Normally closed Main Steam Sample System manual isolation valve
43-632	2-47E610-43-1 3-47E610-43-6	Normally closed Main Steam Sample System manual isolation valve
FCV-1-74	47E801-2	Main Turbine Stop Valve for Steam Line A
FCV-1-78	47E801-2	Main Turbine Stop Valve for Steam Line B
FCV-1-84	47E801-2	Main Turbine Stop Valve for Steam Line C
FCV-1-88	47E801-2	Main Turbine Stop Valve for Steam Line D
FCV-1-61 FCV-1-62 FCV-1-63 FCV-1-64 FCV-1-65 FCV-1-66 FCV-1-67 FCV-1-68 FCV-1-69	47E801-2	Main Steam Bypass Valve Chest
FCV-73-6B	47E812-1	Normally open air operated isolation valve – HPCI
FCV-71-6B	47E813-1	Normally open air operated isolation valve – RCIC
12-635	2-47E815-4 3-47B815-5	Normally closed manual isolation valve – Aux. Boiler

Table 3-2 (CONT.)

BFN MSIV LEAKAGE BOUNDARY POINTS

Leakage Boundary Point *	Flow Diagram/ Drawing *	Comment
12-637	2-47E815-4 3-47B815-5	Normally closed manual isolation valve – Aux. Boiler
12-623	2-47E815-4 3-47B815-5	Normally closed manual isolation valve – Aux. Boiler
12-625	2-47E815-4 3-47B815-5	Normally closed manual isolation valve – Aux. Boiler
2-12-822	0-47E815-1	Normally closed manual isolation valve – Aux. Boiler (Unit 2 only)
FCV-6-100	47E807-1	Normally closed motor operated isolation valve - Stop valve above seat drains
FCV-6-101	47E807-1	Normally closed motor operated isolation valve - Stop valve above seat drains
FCV-6-102	47E807-1	Normally closed motor operated isolation valve - Stop valve above seat drains
FCV-6-103	47E807-1	Normally closed motor operated isolation valve - Stop valve above seat drains
FCV-1-127	47E801-2	Reactor Feed Pump Turbine A Stop Valve
FCV-1-135	47E801-2	Reactor Feed Pump Turbine B Stop Valve
FCV-1-143	47E801-2	Reactor Feed Pump Turbine C Stop Valve
FCV-6-153	47E807-2	Normally closed motor operated isolation valve - RFP
FCV-6-155	47E807-2	Normally closed motor operated isolation valve - RFP
FCV-6-157	47E807-2	Normally closed motor operated isolation valve - RFP
FCV-6-122	47E807-2	Normally closed motor operated isolation valve - RFP
FCV-6-127	47E807-2	Normally closed motor operated isolation valve - RFP
FCV-6-132	47E807-2	Normally closed motor operated isolation valve - RFP
PCV-1-151	47E801-2	Normally open air operated isolation valve - SJAE
PCV-1-166	47E801-2	Normally open air operated isolation valve - SJAE
PCV-1-153	47E801-2	Normally open air operated isolation valve - SJAE
PCV-1-167	47E801-2	Normally open air operated isolation valve - SJAE
6-826	47E805-3	Check valve – SJAE
6-822	47E805-3	Check valve – SJAE

Table 3-2 (CONT.)

BFN MSIV LEAKAGE BOUNDARY POINTS

Leakage Boundary Point *	Flow Diagram/ Drawing *	Comment
FCV-1-145	47E807-2	Normally closed motor operated isolation valve – Steam Seal Regulator
FCV-1-154	47E807-2	Normally closed motor operated isolation valve – Steam Seal Regulator
FCV-1-147	47E807-2	Air operated pressure regulating valve – Steam Seal Regulator
CKV-1-742	47E801-2	Check valve (NEW) – Off-Gas Preheater A
CKV-1-744	47E801-2	Check valve (NEW) – Off-Gas Preheater B
Condenser A	---	The condenser is the ultimate boundary for the MSIV leakage path.
Condenser B	---	The condenser is the ultimate boundary for the MSIV leakage path.
Condenser C	---	The condenser is the ultimate boundary for the MSIV leakage path.
Miscellaneous test, vent, drain and instrument connections	47E801-1 47E801-2	---

NOTE:

* Boundary component ID's and flow diagram/drawing nos. are generally applicable to both Units 2 and 3, unless noted otherwise specifically (i.e., 2- for Unit 2; 3- for Unit 3; and 0- for common)

Table 3-3
BROWNS FERRY UNIT 3
MSIV WALKDOWN "OUTLIERS"

SYSTEM DESCRIPTION	ID[1]	OUTLIER[2]	A	F	P	D	V
Main Steam Drain Line-Turbine Bldg.	1						
MS Drain Taps	1-1	MS Line differential motion				X	
MS Drain Taps	1-2	Impact with conduit supports			X		
FCV 1-58	1-3	Extended valve operators					X
FCV 1-58/59 Conduit	1-4	Unknown routing at TB/RB joint				X	
Main Steam Lines -- Turbine Bldg.	2						
MS Stop Valves	2-1	Valve performance	X				X
MSH-17	2-2	Missing eyebolt nut	X				
MSH-17,18 & 19	2-3	Grating clearance			X		
Main Steam Drain Line- MSIV Vault	3						
FCV 1-15, 27, 38 & 52	3-1	Valve performance	X				X
FCV 1-56	3-2	Manual operator					X
HPCI/RCIC Drain	4						
HPCI Drain at MS drain connection	4-1	Inadequate bending leg	X				
MS PT 1-72, 76, 82, 86 & 93	5						
MS instrument tubing	5-1	Overspan on 1" pipe to PT 1-86		X			
1/2 Line to PT 1-86	5-2	Interaction with steel & pipe			X		
Main Steam Sample to Station	6						
Sample lines B & D	6-1	Missing tubing support clamps		X			
Sample lines A, B, C, D	6-2	Inadequate flex legs at MS line				X	
PT 16A/B	6-3	Inadequate flex legs at MS line				X	
Sample Station	6-4	Temperature bath anchorage	X				
Main Steam Bypass	7						
Main Steam Bypass Valve	7-1	Valve performance	X				X
SV Above Seat Drains	8						
FCV 6-100, 101, 102, 103	8-1	Short rod hangers		X			
Steam to Steam Seal Regulator	9						
MS to FCV 1-146	9-1	Overspan piping		X			
PCV 1-147	9-2	Handwheel proximity to WF			X		
PCV 1-147 airline	9-3	Inadequate flexibility & blockwall			X	X	
PCV 1-147	9-4	Extended valve operator					X

Table 3-3 (CONT.)
BROWNS FERRY UNIT 3
MSIV WALKDOWN "OUTLIERS"

SYSTEM DESCRIPTION	ID[1]	OUTLIER[2]	A	F	P	D	V
Steam Supply to RFP Turbines	10						
Steam supply line	10-1	Inadequate flex leg at MS header				X	
Steam supply line	10-2	Stanchion supports		X			
Steam supply line	10-3	TB crane overhead			X		
RFP Stop Valve above seat drains	10-4	Large mass on the 1/2 & 3/4 inch lines	X				
Tubing to PI 1-126	10-5	Missing tubing clamps – overspan		X			
Steam Supply to SJAE	11						
SJAE 3A/B	11-1	Anchorage	X				
SJAE 3B	11-2	Loose anchor bolt nut	X				
Drain to Condenser	11-3	Drain ties to multi system collector					X
Steam to Off-Gas Preheaters	12						
PCV 1-175A/B	12-1	Masonry wall			X		
Steam supply line to FCV 1-178A/B	12-2	Vert. restraint of line at FCV 1-178				X	
PCV 1-175A/B, FCV 1-178A/B	12-3	Valve performance					X
Condenser	13						
Condenser and anchorage adequacy	13-1	Evaluate condenser/anchorage	X				

KEY TO ISSUES:

A Anchorage or Support Capacity

F Failure and Falling (II/I)

P Proximity and Impact

D Differential Displacement

V Valve Screening

NOTES:

1 - ID - Refers to MSIV Walkdown package identifier.

2 - "Outliers" are plant conditions which require further evaluation.

Table 3-4

BROWNS FERRY UNIT 2
MSIV WALKDOWN "OUTLIERS"

SYSTEM DESCRIPTION	ID[1]	OUTLIER[2]	A	F	P	D	V
Main Steam Drain Line-Turbine Bldg.	1						
MS Drain Taps		1-1: MS Line differential motion				X	
FCV-1-58		1-2: Extended valve operators					X
Main Steam Lines – Turbine Bldg.	2						
MS Stop Valves		2-1: Valve performance	X				X
RB MSIV Vault - MS and MS Drain	3						
FCV-1-15, -27, -38 & -52		3-1: Valve performance					X
HPCI/RCIC/Aux. Boiler Drains	4A						
HPCI Drain at MS drain connection		4-1: Inadequate bending leg	X			X	
HPCI Drain in RB Steam Vault		4-2: Piping overspan	X				
HPCI Drain in RB SE Corner Rm		4-3: Piping overspan	X				
HPCI/RCIC/Aux. Boiler Drains	4B						
HPCI & Aux. Boiler drain lines supports		4-4: Miscellaneous maintenance items	X				
HPCI Drain above the Torus		4-5: Piping overspan	X				
RCIC Drain above the Torus		4-6: Inadequate support	X				
MS PT-1-72, -76, -82 & -86	5						
1/2" PT Piping from Steam Lines		5-1: Interaction with platform steel				X	
Main Steam Sampling	6						
PT-16A/B Piping		6-1: Interaction with Feedwater piping			X		
Sample lines A, B, C, D		6-2: Inadequate flex legs at MS line				X	
PT-16A/B		6-3: Inadequate flex legs at MS line				X	
Sample Station		6-4: Temperature bath anchorage	X			X	
PT-16A/B		6-5: Interaction with oil drum			X		
Main Steam Bypass	7						
Main Steam Bypass Valve		7-1: Valve performance	X				X
SV Above Seat Drains	8						
FCV-6-100, -101, -102 & -103		8-1: Short rod hangers	X				
1" Drain Piping from Steam Line D		8-2: Interaction with MS piping/steel			X		

Table 3-4 (CONT.)

BROWNS FERRY UNIT 2
MSIV WALKDOWN "OUTLIERS"

SYSTEM DESCRIPTION	ID[1]	OUTLIER[2]	A	F	P	D	V
Steam to Steam Feed Valve	9						
Rod Hanger Downstream of Valve 8-575		9-1: Disengaged rod hanger	X				
Verification Boundary Valve 8-575 (Proposed in the Original Scope)		9-2: Normally open manual valve					X
Steam Supply to RFP Turbines	10						
Steam supply line		10-1: Inadequate flex leg at MS header				X	
Steam supply line		10-2: Stanchion supports		X			
Steam supply line		10-3: TB overhead crane		X	X		
Verification Boundary Valve 1-RFPT (Proposed in the Original Scope)		10-4: Installation of valve					X
Condensers	13						
Condenser anchorage		13-1: Evaluate anchorage	X				

KEY TO ISSUES:

A Anchorage or Support Capacity

F Failure and Falling (II/I)

P Proximity and Impact

D Differential Displacement

V Valve Screening

NOTES:

1 - ID - Refers to MSIV Walkdown package identifier.

2 - "Outliers" are plant conditions which require further evaluation.

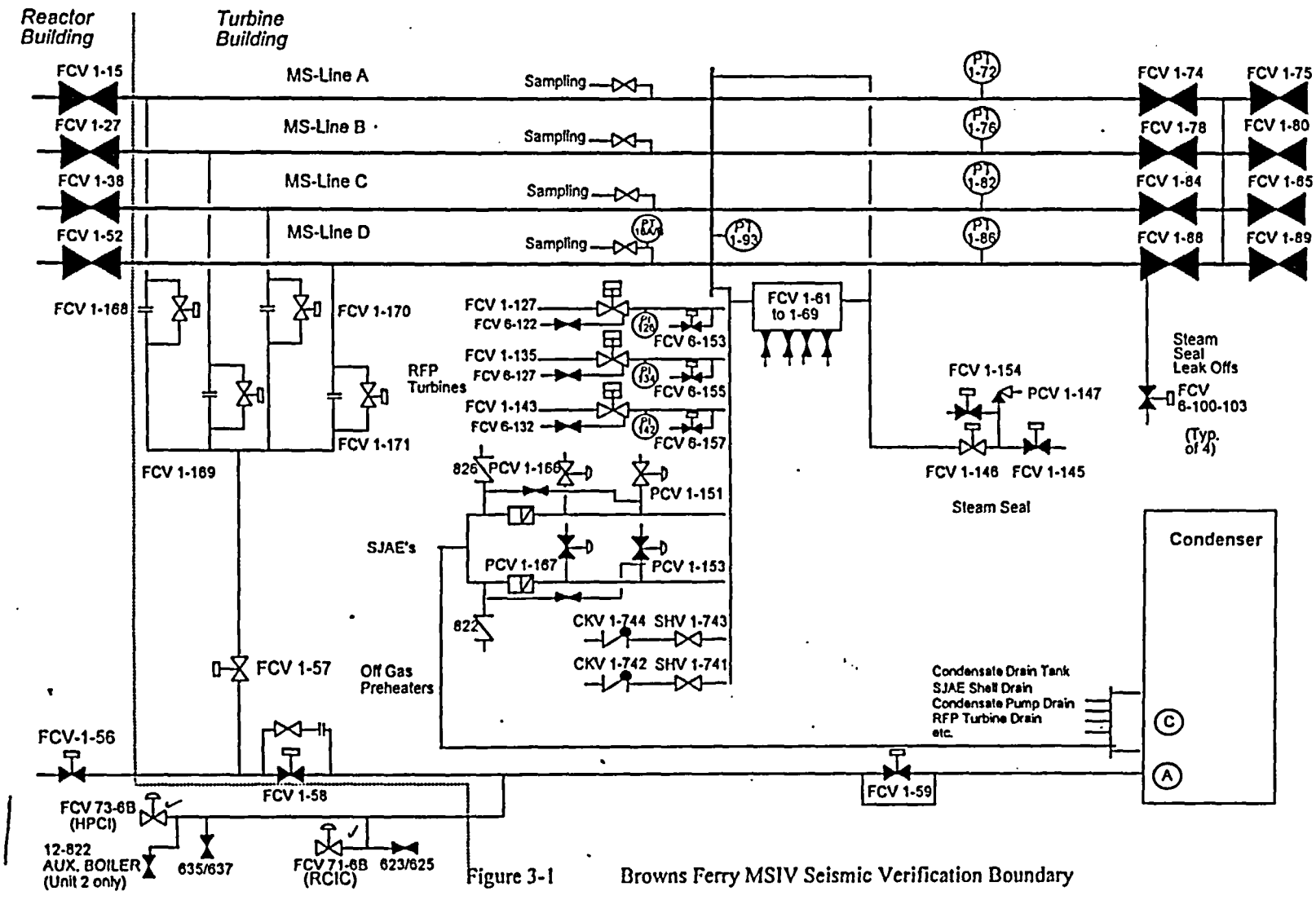

Figure 3-1 Browns Ferry MSIV Seismic Verification Boundary

R1

CD-N0001-990113 Page A40
Attachment A

4. SEISMIC ASSESSMENTS

As part of the supplemental plant specific seismic verification program to support the increased MSIV leakage tech spec change at BFN, various engineering evaluations and assessments were performed to verify the seismic adequacy of the Alternate Leakage Treatment (ALT) piping, related components and supports, and condensers. The following sections discuss the technical bases and methods used in these evaluations and assessments. Results of the seismic evaluations are also presented.

4.1 OUTLIER RESOLUTION

Conditions which did not meet the walkdown screening guidelines (Section 3.1) or which were judged by the Seismic Walkdown Team to require further review were documented as "Outliers" during the Units 2 and 3 Seismic Verification Walkdowns at Browns Ferry Nuclear Plant. For BFN Unit 3, the walkdown outliers have been resolved on a deterministic basis and dispositioned as described in more detail below. The proposed resolution for Unit 2 outliers will follow similar Unit 3 approaches and/or utilize existing Unit 3 analyses, as applicable. The Unit 3 outlier resolution are documented in BFN calculations (References 6 and 7).

4.1.1 Seismic Demand

The BFN Turbine Building is classified as a Class II structure, hence, no dynamic analysis of the building was performed and no in-structure response spectra were available for the structure. For seismic evaluations and outlier resolution, the horizontal seismic demand for components located within about 40 feet of the Turbine Building effective grade elevation (EL. 568') is conservatively taken as the BFN 5% damped design basis DBE input spectrum (0.2g Housner curve) scaled by 1.6 to account for soil amplification per BFN General Design Criteria (Reference 8) for soil founded structures, and 1.5 for building amplification per GIP. For components located above 40 feet of the Turbine Building effective grade elevation, an additional amplification factor of 1.5 is conservatively applied. In the vertical direction, seismic demand is taken as 2/3 that of the horizontal direction, with a soil amplification factor of 1.1 instead of 1.6.

4.1.2 Seismic Capacity

For outlier resolution and evaluation of ALT piping, and related components and supports, the following load combinations and stress allowables, as applicable, were used:

Component	Load Combination	Stress Allowables
Piping	D + P + I + A (Primary + Secondary)	2.0 Sy
Pipe Supports	D + T + I + A	AISC
Equipment Anchorage	D + I	AISC, GIP
Valve	3g load check	GIP

where,
D – Dead load
P – Pressure load
T – Thermal load
I – Seismic (DBE) inertial load
A – Load due to seismic anchor movement
Sy – Material yield strength at temperature
AISC – American Institute of Steel Construction
GIP – Generic Implementation Procedure

4.1.3 Summary of Results

Table 4-1 provides a summary of the proposed resolution methods for the outliers associated with the Unit 2 MSIV Seismic Verification Walkdown. Similarly, the results of the resolution of outliers associated with the Unit 3 MSIV Seismic Verification Walkdown are summarized in Table 4-2.

As mentioned in Section 3.3.3 above, additional Unit 2 Seismic Verification Walkdown for the expanded scope will be performed during its Cycle 11 outage to verify the seismic ruggedness of the MS piping and associated components. Any additional outliers identified during this walkdown will be addressed and resolved within the same outage period. Design Change Notice (DCN) will address any physical changes to restore the drain path into compliance.

4.2 ALTERNATE LEAKAGE TREATMENT PIPING AND SUPPORTS

Majority of the MSIV alternate leakage treatment (ALT) piping systems and related components at Browns Ferry, i.e., those portions downstream of the outboard Main Steam Isolation Valves (MSIV's) and the outboard Main Steam Drain Isolation Valve (MSDIV), are located in the Turbine Building and are not designated as Seismic Class I systems. In general, these piping systems are not seismically analyzed, and are typically designed to the requirements of USAS B31.1-1967.

As part of the plant specific seismic verification of the non-seismic ALT piping, related supports and components using the earthquake experience-based approach as outlined in the BWROG Report, the following reviews were performed to demonstrate that the piping and related supports fall within the bounds of the experience database:

- Review of the design codes and standards, piping design parameters, and support configurations.
- Seismic verification walkdown to identify potential piping concerns.

The Browns Ferry ALT piping systems consist of welded steel pipe and standard support components. Support spacing generally meets the B31.1 recommended span. The design bases for the portions of piping associated with the ALT pathway to the condensers are tabulated in Table 4-3. Table 4-4 presents a general summary of the piping data that constitute the seismic experience data. Comparison of Browns Ferry and selected database piping parameters is presented in Table 4-5, along with Figure 4-1, which presents a comparison of D/t ratios of the BFN ALT drain piping with those

found in the database. Overall, the BFN piping design is similar to and well represented by those found in the experience database sites that have shown to perform well in past earthquakes.

Browns Ferry FSAR does not reference Appendix A to 10 CFR Part 100. The seismic adequacy of the ALT piping is addressed by performing seismic verification walkdowns to identify specific design attributes associated with poor seismic performance, following the guidelines outlined in Section 3.1 of this report. Bounding evaluations were performed for typical support configurations using evaluation criteria as discussed in Section 4.1. Table 4-6 summarizes the results of the support and anchorage evaluations for the selected bounding configurations (Reference 10).

NOTE: THIS CALC, ATTC | R1

The seismic evaluations, consisting of verification walkdowns, bounding support evaluations, and resolution of the identified walkdown outliers, provide reasonable assurance that the ALT drain path piping, related supports and components will remain functional in the event of a Design Basis Earthquake (DBE) at Browns Ferry.

4.3 TURBINE BUILDING

Performance of the turbine building and other non-seismic structures during a seismic event is of interest to the MSIV leakage issue only to the extent that the building structure and its internal components should survive and not degrade the capabilities of the selected main steam and condenser pathways. A BWROG (Reference 1) survey of this type of industrial structures has, in general, confirmed that excellent past seismic performance exists. There are no known cases of structural collapse of either turbine buildings at power stations or structures of similar construction.

The majority of the MSIV alternate leakage treatment (ALT) piping and the condensers at Browns Ferry are located in the Turbine Building, while small portions of the ALT piping are located in the Reactor Building which is a seismically designed, Class I structure. BFN Turbine Building is classified as a Class II structure in the BFN FSAR. The BFN Design Criteria for Class II structures are that they shall not degrade the integrity of any Class I structure. Those portions of Class II structures required to remain structurally competent in order to support the operation of Class I

structures or equipment shall be designed for earthquake in accordance to the Uniform Building Code. Table 4-7 provides the design basis of the BFN Turbine Building and the applicable design codes used.

BFN Turbine Building below the operating floor at El. 617 feet is a reinforced concrete framed structure supported on steel H-piles to the bedrock at El. 519 feet. Piles are spaced far enough apart within each cluster to ensure that the maximum average unit bearing stress on the rock area is limited to 500 psi. Stresses in the piles are limited to one third of the yield stress. The concrete beams and slabs are designed to ACI 318-63 code using the working stress method. Similarly, the columns are also designed to ACI 318-63 code using the working stress method and checked by the ultimate strength design method using a load factor of 1.8.

The superstructure above the operating deck consists of transverse welded steel rigid frames spanning approximately 107 feet. An expansion joint is provided between a two-bay frame for Units 1 and 2, and a single-bay frame for Unit 3. For longitudinal expansion, the superstructure is provided with joints by using double rows of frames spaced at 4 feet apart. The steel frames, which form the Turbine Building structure above the concrete structure, are braced to provide rigidity in the direction of the Reactor Building as well as to provide support for the turbine cranes. These frames are designed to resist lateral forces from the overhead cranes and wind loads, in addition to supporting the vertical dead and live loads. The design of the steel superstructure is based on 1963 AISC code. All material conforms to ASTM-36, except for anchor rods which are ASTM A-307 steel. Shop connections are ASTM A-502 Gr. 1 rivets or welded, and field connections are ASTM A-325 high-strength bolts.

Based on the above design bases for the BFN Turbine Building, and the excellent seismic performance of this similar type of industrial structure in past strong-motion earthquakes as documented in the BWROG Report, the Browns Ferry Turbine Building is expected to remain structurally intact following a DBE.

4.4 CONDENSER

The BFN condensers consist of three single-pass, single pressure, radial flow type surface condensers. Each condenser is located beneath each of the three low pressure turbines, and is structurally independent. Table 4-8 lists the design data for BFN condensers and for the two experience database sites listed in the BWROG Report. In addition, design characteristic comparisons of the BFN condensers with the selected database condensers are shown in Figures 4-2 to 4-5. The BFN condenser design data is comparable to the data for these two database sites. The BFN condensers were also evaluated for structural integrity subject to seismic DBE loads. Results of the evaluation indicate that the condenser shell stresses are small. Maximum stress ratios, based on AISC allowables, are 0.12 for combined axial and bending and 0.10 for shear (Reference 10).. R1

L 1/2: THIS CALC, ATT B

The condenser support anchorage consists of a center key and six support feet that are arranged as shown in Figure 4-6. The center support is a fixed anchor, and consists of a built-up wide flange H section embedded 4 feet into the concrete pedestal which is connected to the Turbine Building base mat, and welded to the bottom plate of the condenser. The support plates consist of 2 to 3 anchors of 2- to 2-1/2- inch diameter bolts. Each anchor bolt has greater than 5 feet nominal length with approximately 48 inches of embedment into the concrete pedestal which is connected to the Turbine Building base mat. These supports are designed to resist vertical operating loads, and are slotted radially from the center key to allow for thermal growth. Shear forces are transferred to the wide flange shaped anchor in the center and to the anchor bolts and shear keys to the support feet and carried through the concrete pedestal to the Turbine Building base mat.

The BFN condenser anchorage was compared with the performance of similar condenser in the earthquake experience database. The shear areas of the condenser anchorage, in the directions parallel and transverse to the turbine generator axis, divided by the seismic demand, were used to compare with those presented in the BWROG Report (Reference 1), and are shown in Figures 4-7 and 4-8, respectively. The BFN condenser anchorage shear area to seismic demand is substantially greater than the selected database sites. The condenser support anchorage was also

evaluated and the results indicate that the combined seismic DBE and operational demand is less than the anchorage capacity based on the AISC allowables. Maximum stress ratios are 0.70 for bolt tension in the perimeter support feet, and 0.86 for shear in the center support built-up section (Reference 7).

The above comparisons of the condenser seismic experience data and the anchorage capacity evaluations demonstrate that the conclusions presented in the BWROG Report (Reference 1) can be applied to the BFN condensers. That is, a significant failure of the condenser in the event of a DBE at BFN is highly unlikely and contrary to the large body of historical earthquake experience data.

Table 4-1

BROWNS FERRY UNIT 2
MSIV "OUTLIERS" RESOLUTION SUMMARY

SYSTEM DESCRIPTION	OUTLIER	OUTLIER DESCRIPTION	RESOLUTION METHOD
Main Steam Drain Line-Turbine Bldg.			
MS Drain Taps	1-1	MS line differential motion	Modify supports per DCN
FCV 1-58	1-2	Extended valve operators	To be resolved per BFN Calc. CD-N0001-980038
Main Steam Lines			
MS Stop Valves	2-1	Valve performance	To be resolved per BFN Calc. CD-N0001-980038
Main Steam Drain Line- MSIV Vault			
FCV 1-15, 27, 38 & 52	3-1	Valve performance	To be resolved per BFN Calc. CD-N0001-980039
HPCI/RCIC/Aux. Boiler Drains – MSIV Pit			
HPCI Drain at MS drain connection	4-1	Inadequate bending leg	Modify supports per DCN
HPCI Drain in RB Steam Vault	4-2	Piping overspan	Install new supports per DCN
HPCI Drain in RB SE Corner Room	4-3	Piping overspan	Install new supports per DCN
HPCI/Aux. Boiler drain line supports	4-4	Misc. maintenance items	Misc. maintenance items to be addressed by WR C340989
HPCI Drain above the Torus	4-5	Piping overspan	Install new supports per DCN
RCIC Drain above the Torus	4-6	Inadequate support (RCIC-09)	Modify support per DCN
MS PT 1-72, 76, 82, 86 & 93			
1/2 in. PT Piping from Steam Lines	5-1	Interaction with platform steel	Re-route piping/instrumentation line per DCN
Main Steam Sample to Station			
PT-16A/B Piping	6-1	Interaction with Feedwater piping	Re-route piping and modify support per DCN
Sample lines A, B, C, D	6-2	Inadequate flex legs at MS line	Remove existing supports and install new supports per DCN

Table 4-1 (CONT.)

BROWNS FERRY UNIT 2
MSIV "OUTLIERS" RESOLUTION SUMMARY

SYSTEM DESCRIPTION	OUTLIER	OUTLIER DESCRIPTION	RESOLUTION METHOD
Main Steam Sample to Station (cont.)			
PT 16A/B	6-3	Inadequate flex legs at MS line	Modify supports per DCN
Sample Station	6-4	Temperature bath anchorage	Provide equipment anchorage per DCN
PT-16A/B	6-5	Interaction with oil drum	Initiate Work Request to relocate the oil drum
Main Steam Bypass			
Main Steam Bypass Valve	7-1	Valve performance	To be resolved per BFN Calc. CD-N0001-980038
SV Above Seat Drains			
FCV 6-100, 101, 102, 103	8-1	Short rod hangers	Modify rod hangers per DCN
1" Drain piping from Steam Line D	8-2	Interaction with MS piping/steel	Re-route drain piping and modify support per DCN
Steam to Steam Seal Regulator			
Rod hanger downstream of Valve 8-575	9-1	Disengaged rod hanger	Maintenance item to be addressed by WR C341864
Verification Boundary Valve 8-575 (Proposed)	9-2	Valve performance	Walkdown scope to be expanded to remove the assumption
Steam Supply to RFP Turbines			
Steam supply line	10-1	Inadequate flex leg at MS header	Modify supports per DCN
Steam supply line	10-2	Stanchion supports	Modify supports per DCN
Steam supply line	10-3	TB overhead crane	To be resolved per BFN Calc. CD-N0001-980039
Verification Boundary Valve 1-RFPT (Proposed)	10-4	Installation of boundary valve	Walkdown scope to be expanded to remove the assumption
Condenser			
Condenser and anchorage adequacy	13-1	Evaluate condenser/anchorage	To be resolved per BFN Calc. CD-N0001-980038

Table 4-2

BROWNS FERRY UNIT 3
MSIV "OUTLIERS" RESOLUTION SUMMARY

SYSTEM DESCRIPTION	OUTLIER	OUTLIER DESCRIPTION	RESOLUTION METHOD
Main Steam Drain Line-Turbine Bldg.			
MS Drain Taps	1-1	MS line differential motion	Relocated three supports per DCN T40871A and BFN Calc. No. CD-N0001-980039
MS Drain Taps	1-2	Impact with conduit supports	Resolved per BFN Calc. No. CD-N0001-980038
FCV 1-58	1-3	Extended valve operators	Resolved per BFN Calc. No. CD-N0001-980038
FCV 1-58/59 Conduit	1-4	Unknown routing at TB/RB joint	Resolved per BFN Calc. No. CD-N0001-980038
Main Steam Lines			
MS Stop Valves	2-1	Valve performance	Resolved per BFN Calc. No. CD-N0001-980038
MSH-17	2-2	Missing eyebolt nut	Nut replaced per WR C164362
MSH-17,18 & 19	2-3	Grating clearances	Modified grating clearances per DCN T40871A
Main Steam Drain Line-MSIV Vault			
FCV 1-15, 27, 38 & 52	3-1	Valve performance	Resolved per BFN Calc. No. CD-N0001-980039
FCV 1-56	3-2	Manual operator	Valve replaced by DCN W17935A
HPCI/RCIC/Aux. Boiler Drains - MSIV Pit			
HPCI Drain at MS drain connection	4-1	Inadequate bending leg	Modified two supports per DCN T40871A and BFN Calc. No. CD-N0001-980039
MS PT 1-72, 76, 82, 86 & 93			
MS instrument tubing	5-1	Overspan on 1" pipe to PT 1-86	Missing clamp replaced per DCN T40871A
1/2 in. Line to PT 1-86	5-2	Interaction with steel & pipe	Re-route piping/instrumentation line per DCN T40871A and BFN Calc. No. CD-N0001-980039

Table 4-2 (CONT.)

BROWNS FERRY UNIT 3
MSIV "OUTLIERS" RESOLUTION SUMMARY

SYSTEM DESCRIPTION	OUTLIER	OUTLIER DESCRIPTION	RESOLUTION METHOD
Main Steam Sample to Station			
Sample lines B & D	6-1	Missing tubing support clamps	Missing clamps replaced per WR C193204
Sample lines A, B, C, D	6-2	Inadequate flex legs at MS line	Added four supports and removed four supports per DCN T40871A and BFN Calc. No. CD-N0001-980039
PT 16A/B	6-3	Inadequate flex legs at MS line	Modified two supports per DCN T40871A and BFN Calc. No. CD-N0001-980039
Sample Station	6-4	Temperature bath anchorage	Anchorage provided per DCN T40871A and BFN Calc. No. CD-N0001-980039
Main Steam Bypass			
Main Steam Bypass Valve	7-1	Valve performance	Resolved per BFN Calc. No. CD-N0001-980038
SV Above Seat Drains			
FCV 6-100, 101, 102, 103	8-1	Short rod hangers	Modified rod hangers per DCN T40871A and BFN Calc. No. CD-N0001-980039
Steam to Steam Seal Regulator			
MS to FCV 1-146	9-1	Overspan piping	Resolved per BFN Calc. No. CD-N0001-980039
PCV 1-147	9-2	Hand wheel in proximity to WF section	Resolved per BFN Calc. No. CD-N0001-980039
PCV 1-147 air line	9-3	Inadequate flexibility & blockwall interaction	Resolved per BFN Calc. No. CD-N0001-980039
PCV 1-147	9-4	Extended valve operator	Resolved per BFN Calc. No. CD-N0001-980039

Table 4-2 (CONT.)

BROWNS FERRY UNIT 3
MSIV "OUTLIERS" RESOLUTION SUMMARY

SYSTEM DESCRIPTION	OUTLIER	OUTLIER DESCRIPTION	RESOLUTION METHOD
Steam Supply to RFP Turbines			
Steam supply line	10-1	Inadequate flex leg at MS header	Remove hanger per DCN T40871A and BFN Calc. No. CD-N0001-980039
Steam supply line	10-2	Stanchion supports	Replace two spring hangers per DCN T40871A and BFN Calc. No. CD-N0001-980039
Steam supply line	10-3	TB crane overhead	Resolved per BFN Calc. No. CD-N0001-980039
RFT Stop Valve above seat drains	10-4	Lass mass on 1/2 and 3/4 inch lines	Resolved per BFN Calc. No. CD-N0001-980039
Tubing to PI 1-126	10-5	Missing tubing clamps – overspan	Missing clamps replaced per WR-C193201
Steam Supply to SJAE's			
SJAE 3A/B	11-1	Anchorage and cracked pedestal	Anchorage resolved per BFN Calc. No. CD-N0001-980039; Cracked concrete pedestal repaired per WR-C193206
SJAE 3B	11-2	Loose anchor bolt nut	Re-torqued loose nut per WR-C193205
Drain to Condenser	11-3	Drain ties to multi-system collector	Re-route piping per DCN T40871A and BFN Calc. No. CD-N0001-980039
Steam Supply to Off-Gas Preheaters			
PCV 1-175A/B	12-1	Masonry wall	To be resolved by the proposed installation of NEW boundary valves to Preheaters A & B
Steam supply line to FCV 1-178A/B	12-2	Vertical restraint of line at FCV 1-178	Resolved per BFN Calc. No. CD-N0001-980039
PCV 1-175A/B, FCV 1-178A/B	12-3	Valve performance	To be resolved by the proposed installation of NEW boundary valves to Preheaters A & B
Condenser			
Condenser and anchorage adequacy	13-1	Evaluate condenser/anchorage	Resolved per BFN Calc. No. CD-N0001-980038

Table 4-3

Design Basis for Browns Ferry ALT Related Piping and Supports

Piping Description	Design Temp. (°F)	Design Press. (psig)	Pipe Size (NPS)	Pipe Sch.	D / t	Piping Material	Typical Support Types	Piping Design Basis
MS Lines from outboard MSIV's to MS Header and to Turbine Stop Valves	562	1146	24 1	80 160	20 5	ASTM A-106 Grade B	Spring hangers Vertical struts	USAS B31.1- 1967
Main Steam Header	562	1146	24	80	20	ASTM A-155 Grade KC-70	Spring hangers	USAS B31.1- 1967
MS Stop Valve Above Seat Leak-off	562	1146	1	160	5	ASTM A-106 Grade B	Rod hangers	USAS B31.1- 1967
Turbine Bypass Valve Header	562	1146	18	80	19	ASTM A-106 Grade B	Rigid supports Rod and Spring hangers	USAS B31.1- 1967
MS Steam Supply to RFP Turbine Stop Valves	562	1146	6 4	80 80	15 13	ASTM A-106 Grade B	Rod and Spring hangers Stanchion supports	USAS B31.1- 1967
MS Steam Supply from MS Header to SJAE's to the Condenser	562	1146	3 2 1-1/2 1	160 160 160 160	8 7 7 5	ASTM A-106 Grade B	Rod and Spring hangers	USAS B31.1- 1967

CD-N0001-990113 Page A53
Attachment A

Table 4-3 (CONT.)

Design Basis for Browns Ferry ALT Related Piping and Supports

Piping Description	Design Temp. (°F)	Design Press. (psig)	Pipe Size (NPS)	Pipe Sch.	D / t	Piping Material	Typical Support Types	Piping Design Basis
MS Steam Supply to Steam Seal Regulators	562	1146	4	80	13	ASTM A-106 Grade B	Rod hangers	USAS B31.1- 1967
MS Steam Supply from MS Header to the Off-Gas Preheaters A & B	562	1146	2	160	7	ASTM A-106 Grade B	Rod hangers	USAS B31.1- 1967
			2	160	7	ASTM A-335 Grade P11	New piping associated with the proposed installation of new boundary valves to Preheaters A & B	
MS Outboard Drains from MS Lines to the Main Drain Line	562	1146	3 2 1	160 160 160	8 7 5	ASTM A-106 Grade B	Stanchion supports	USAS B31.1- 1967
			3 2	160 160	8 7	ASTM A-333 Grade 1		
Main Drain Line to the Condenser	562 / 450	1146 / 400	4 3 1	80 160 160	13 8 5	ASTM A-106 Grade B	Rod and Spring hangers Stanchion supports	USAS B31.1- 1967

CD-N0001-990113 Page A54
Attachment A

Table 4-3 (CONT.)

Design Basis for Browns Ferry ALT Related Piping and Supports

Piping Description	Design Temp. (°F)	Design Press. (psig)	Pipe Size (NPS)	Pipe Sch.	D / t	Piping Material	Typical Support Types	Piping Design Basis
HPCI Drain to MS Drain; RCIC Drain to HPCI Drain; Aux. Boiler Drains to HPCI/RCIC/	450	400	2 1	160 160	7 5	ASTM A-106 Grade B	Rigid supports	USAS B31.1- 1967
Reactor Building Drain Line	270	415	1	160	5			
Misc. PT Instrument Lines Sample Lines to Sample Station	562	1146	1	160	5	ASTM A-106 Grade B	Rigid supports	USAS B31.1- 1967
			¼" tubing	.049" (wall t)	--	ASTM A-213 SS Gr. TP-304	Rigid supports (tube clamps)	--

CD-N0001-990113 Page A55
Attachment A

Table 4-4

Seismic Experience Database Piping Data

Facility	Pipe Size (NPS)	Pipe O.D. (inch)	Schedule	Wall Thickness (inch)	D/t
Valley Steam Plant Units 1 & 2	24	24.0	20	0.375	64
	20	20.0	20	0.375	53
	18	18.0	30	0.437	41
	16	16.0	30	0.375	43
	14	14.0	30	0.375	37
	12	12.75	40	0.406	31
	12	12.75	30	0.330	39
	10	10.75	160	1.125	10
	8	8.625	160	0.906	10
	6	6.625	40	0.280	24
	4	4.50	160	0.531	8
	4	4.50	40	0.237	19
	3	3.50	160	0.437	8
	3	3.50	80	0.300	12
	3	3.50	40	0.216	16
	2	2.375	160	0.343	7
	2	2.375	40	0.154	15
	1½	1.90	160	0.281	7
	1½	1.90	40	0.145	13
	1	1.315	40	0.133	10
	¾	1.05	160	0.218	5
	¾	1.05	40	0.113	9

Table 4-4 (CONT.)
Seismic Experience Database Piping Data

Facility	Pipe Size (NPS)	Pipe O.D. (inch)	Schedule	Wall Thickness (inch)	D/t
El Centro Steam Plant	20	20.0	STD	0.375	53
	18	18.0	160	1.781	10
	18	18.0	XS	0.500	36
	18	18.0	STD	0.375	48
	14	14.0	40	0.437	32
	14	14.0	STD	0.375	37
	12	12.75	160	1.312	10
	12	12.75	STD	0.375	34
	10	10.75	40	0.365	29
	8	8.625	160	0.906	10
	8	8.625	120	0.718	12
	8	8.625	40	0.322	27
	6	6.625	120	0.562	12
	6	6.625	40	0.280	24
	4	4.50	80	0.337	13
	4	4.50	40	0.237	19
	3	3.50	160	0.437	8
	3	3.50	80	0.300	12
	3	3.50	40	0.216	16
	2	2.375	160	0.343	7
	2	2.375	80	0.218	11
	2	2.375	40	0.154	15
	1½	1.90	160	0.281	7
	1½	1.90	80	0.200	10
	1½	1.90	40	0.145	13
	1	1.315	80	0.179	7
	1	1.315	40	0.133	10
	¾	1.05	80	0.154	7
	¾	1.05	40	0.113	9

Table 4-4 (CONT.)

Seismic Experience Database Piping Data

Facility	Pipe Size (NPS)	Pipe O.D. (inch)	Schedule	Wall Thickness (inch)	D/t
Moss Landing Units 1, 2 & 3	16	16.0	--	1.394	11
	12	12.75	--	1.148	11
	8	8.625	160	0.906	10
	8	8.625	30	0.277	31
	6	6.625	160	0.562	12
	6	6.625	40	0.280	24
	4	4.50	160	0.531	8
	4	4.50	80	0.337	13
	4	4.50	40	0.237	19
	3--	3.50	160	0.437	8
	3	3.50	80	0.300	12
	3	3.50	40	0.216	16
	2	2.375	160	0.343	7
	2	2.375	80	0.218	11
	2	2.375	40	0.154	15
	1½	1.90	160	0.281	7
	1½	1.90	80	0.200	10
	1	1.315	160	0.250	5
	1	1.315	80	0.179	7
	¾	1.05	160	0.218	5
	¾	1.05	80	0.154	7

Table 4-4 (CONT.)

Seismic Experience Database Piping Data

Facility	Pipe Size (NPS)	Pipe O.D. (inch)	Schedule	Wall Thickness (inch)	D/t
Moss Landing Units 4 & 5	24	24.0	40	0.687	35
	24	24.0	--	1.066	23
	--	18.8	--	2.287	8
	16	16.0	40	0.500	32
	16	16.0	--	0.902	18
	--	13.2	--	1.668	8
	8	8.625	160	0.906	10
	8	8.625	40	0.322	27
	6	6.625	160	0.562	12
	6	6.625	40	0.280	24
	4	4.50	160	0.531	8
	4	4.50	80	0.337	13
	4	4.50	40	0.237	19
	3	3.50	160	0.437	8
	3	3.50	80	0.300	12
	3	3.50	40	0.216	16
	2	2.375	160	0.343	7
	2	2.375	80	0.218	11
	2	2.375	40	0.154	15
	1½	1.90	160	0.281	7
	1½	1.90	80	0.200	10
	1½	1.90	40	0.145	13
	1	1.315	160	0.250	5
	1	1.315	80	0.179	7
	1	1.315	40	0.133	10
	¾	1.05	160	0.218	5
	¾	1.05	80	0.154	7
	¾	1.05	40	0.113	9

Table 4-4 (CONT.)
Seismic Experience Database Piping Data

Facility	Pipe Size (NPS)	Pipe O.D. (inch)	Schedule	Wall Thickness (inch)	D/t
Moss Landing Units 6 & 7	30	30.0	--	0.632	47
	26	26.0	--	1.128	23
	18	18.0	--	3.444	5
	12	12.75	--	2.444	5
	12	12.75	--	0.601	21
	8	8.625	--	1.650	5
	8	8.625	40	0.322	27
	6	6.625	--	1.268	5
	6	6.625	40	0.280	24
	4	4.50	--	0.861	5
	4	4.50	80	0.337	13
	4	4.50	40	0.237	19
	3	3.50	80	0.300	12
	3	3.50	40	0.216	16
	2½	2.875	--	0.550	5
	2½	2.875	80	0.276	10
	2½	2.875	40	0.178	16
	2	2.375	--	0.519	5
	2	2.375	80	0.218	11
	2	2.375	40	0.154	15
	1½	1.90	--	0.428	4
	1½	1.90	80	0.200	10
	1½	1.90	40	0.145	13
	1	1.315	--	0.301	4
	1	1.315	80	0.179	7
	1	1.315	40	0.133	10
	¾	1.05	160	0.218	5
	¾	1.05	80	0.154	7
	¾	1.05	40	0.113	9
	½	1.05	--	0.210	4
	¼	0.54	--	0.153	4

Table 4-4 (CONT.)

Seismic Experience Database Piping Data

Facility	Pipe Size (NPS)	Pipe O.D. (inch)	Schedule	Wall Thickness (inch)	D/t
Ormond Beach Units 1 & 2	30	30.0	-	1.298	23
	30	30.0	-	0.719	42
	21	21.0		3.793	6
Humboldt Bay Unit 3	12	12.75	80	0.687	19
	10	10.75	80	0.593	18
	6	6.625	80	0.432	15

Table 4-5

Comparison of Browns Ferry and Selected Database Piping Parameters

Piping Parameter	Browns Ferry	Database Sites
Pipe Diameter (inch)	1.315 – 24.0	1.05 – 30.0
Wall Thickness (inch)	0.25 – 1.218	0.113 – 3.793
Diameter-to-Thickness Ratio (D/t)	5 - 20	4 – 64

Table 4-6

Bounding Evaluations of Typical Support Configurations

Support Type	Critical Component	Stress Ratio
Cantilever bracket	Anchor bolts	.73
Rod hanger	Overhead weld attachment	.70

Table 4-7

Browns Ferry Turbine Building Design Basis

Design Attribute	Description
Lateral Force Resisting System Above the Operating Deck	The Turbine Building above the operating deck is framed by transverse welded steel rigid frames with fixed bases and braced in the direction of the Reactor Building to provide the resistance to lateral forces.
Lateral Force Resisting System Below the Operating Deck	The Turbine Building below the operating deck is a reinforced concrete structure. Concrete walls serve as shear walls for the lateral loads in the direction of the Reactor Building.
Design Codes	General: Uniform Building Code (UBC) Concrete: American Concrete Institute (ACI 318-1963) Steel: American Institute of Steel Construction (AISC) -1963
Seismic Design Basis	UBC zone 1
Wind Design Basis	Wind speed of 100 mph

Table 4-8

Comparison of Browns Ferry and Selected Database Condensers

Design Attributes	Moss Landing Units 6 & 7	Ormond Beach Units 1 & 2	Browns Ferry
Condenser Manufacturer	Ingersoll-Rand	Southwestern	Foster Wheeler
Flow Type	Single Pass	Single Pass	Single Pass
Condenser Dimensions (LxWxH)	65 ft. x 36 ft. x 47 ft.	52 ft. x 27 ft. x 20 ft.	58 ft. x 32 ft. x 47 ft.
Condenser Surface Area	435,000 sq. ft.	210,000 sq. ft.	222,000 sq. ft.
Condenser Shell Material	Cu Bearing ASTM A-285C	Cu Bearing ASTM A-285C	ASTM A-285C
Condenser Shell Thickness	3/4"	3/4"	7/8"
Condenser Operating Weight	3,115 kips	1,767 kips	2,076 kips
Tube Material	Al-Brass	90-10 Cu-Ni	Al-6XN
Tube Size	1" dia.	1" dia.	7/8" dia.
Tube Length	65 ft.	53 ft.	50 ft.
Tube Wall Thickness	18 BWG	20 BWG	22 BWG

Table 4-8 (CONT.)
Comparison of Browns Ferry and Selected Database Condensers

Design Attributes	Moss Landing Units 6 & 7	Ormond Beach Units 1 & 2	Browns Ferry
Number of Tubes	25,590	15,220	19,480
Tube Sheet Material	Muntz	Muntz	ASTM A-285C
Tube Sheet Thickness	1-1/2"	1-1/4"	1-1/4"
No. of Tube Support Plates	15	14	15
Tube Support Plate Material	Not Given	Cu Bearing ASTM A-285C	ASTM A-285C
Tube Support Plate Thickness	3/4"	5/8"	7/8"
Tube Support Plate Spacing	48 in.	36 in.	39 in.
Water Box Material	2% Ni Cast Iron ASTM A-48 Class 30	Cu Bearing ASTM A-285C	ASTM A-285C
Expansion Joint	Rubber Belt	Stainless Steel	Rubber Belt
Hotwell Capacity	20,000 gal.	34,338 gal.	28,000 gal. (max.)

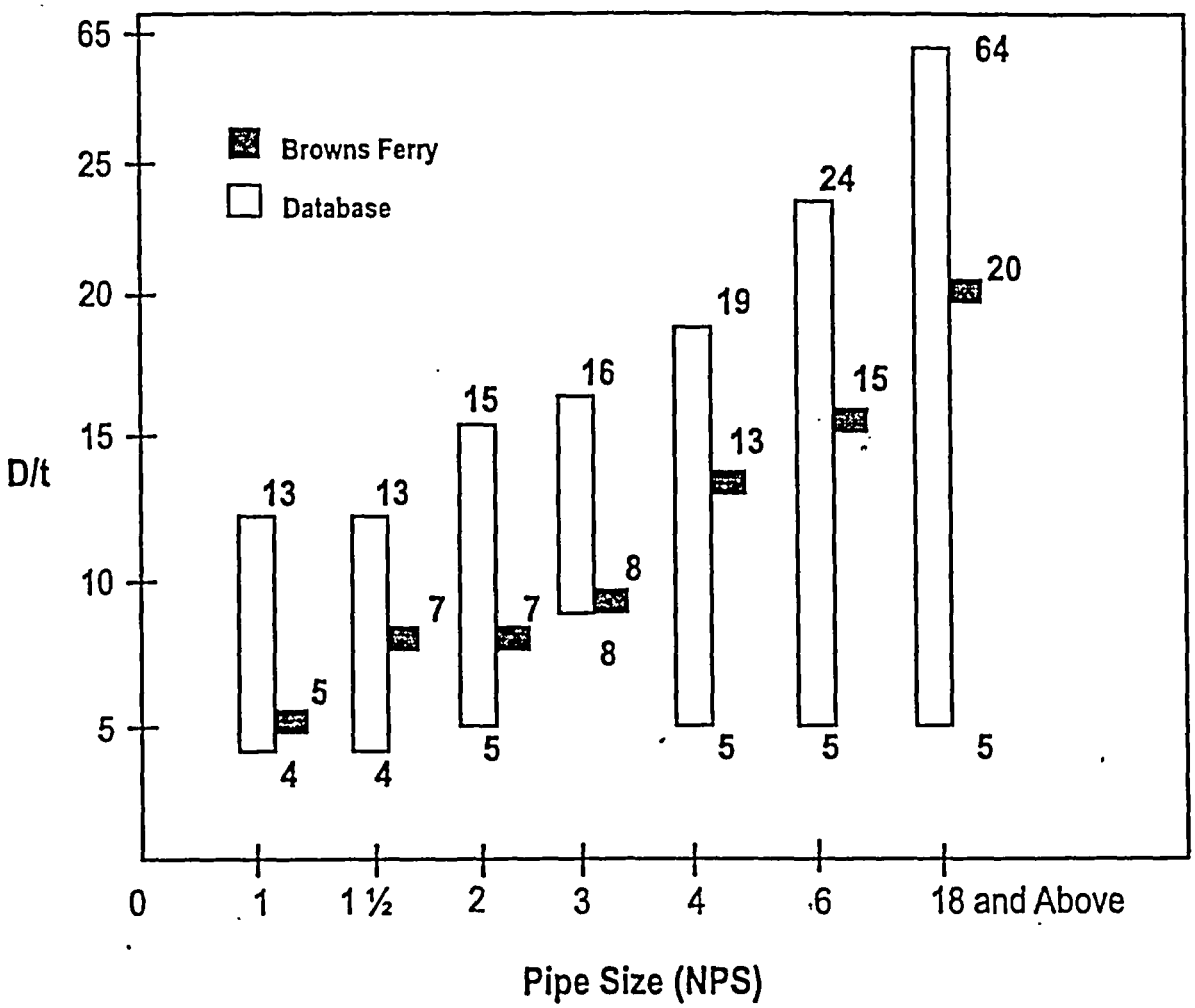

Figure 4-1 Comparison of Browns Ferry and Selected Database Piping D/t Ratios

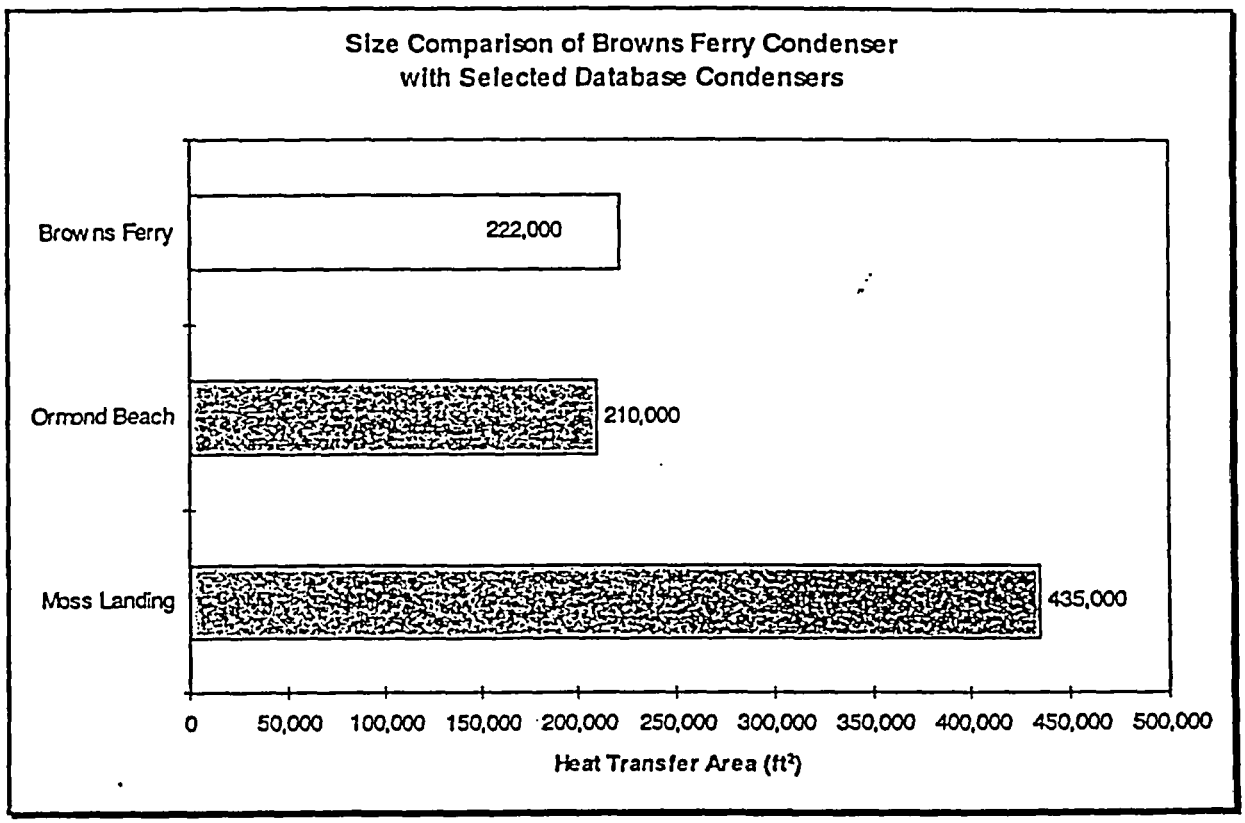

Figure 4-2 Size Comparison of Browns Ferry Condenser with Selected Database Condensers

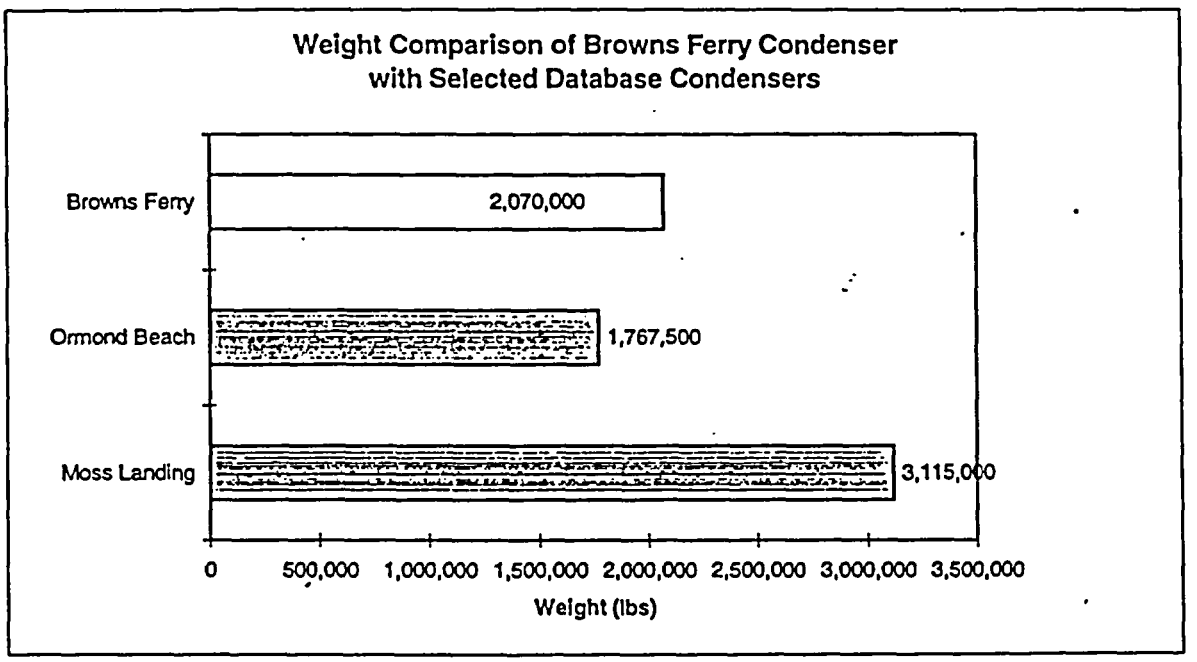

Figure 4-3 Weight Comparison of Browns Ferry Condenser with Selected Database Condensers

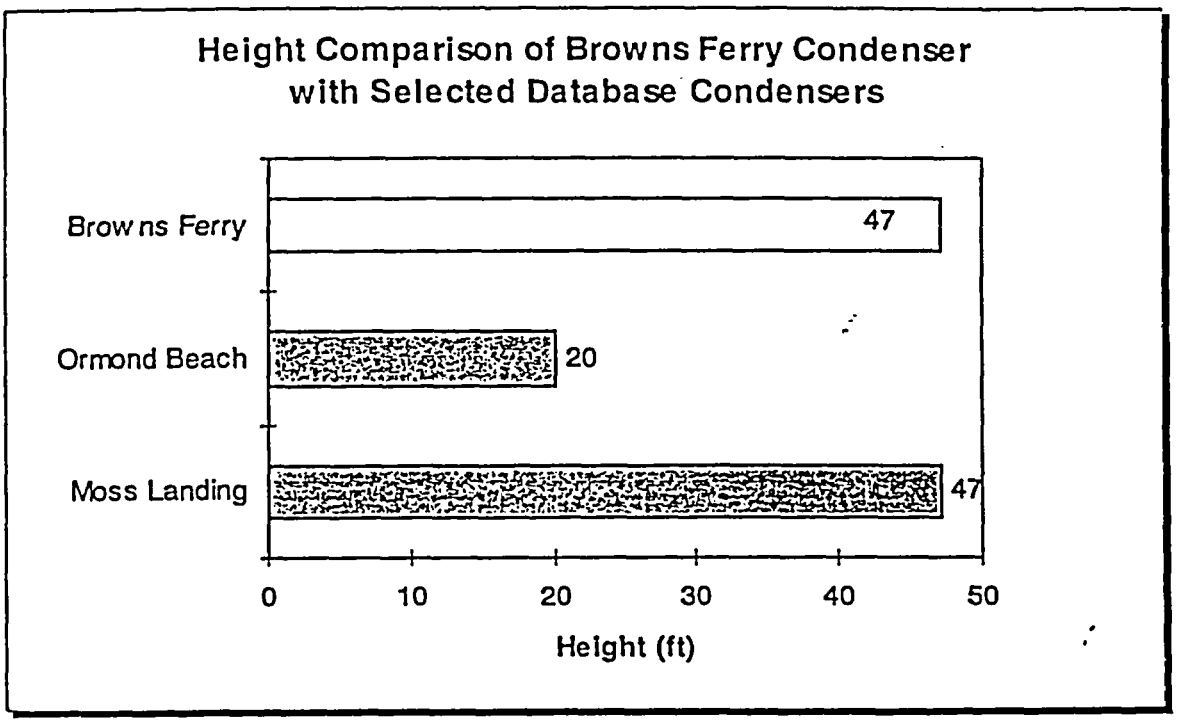

Figure 4-4 Height Comparison of Browns Ferry Condenser with Selected Database Condensers

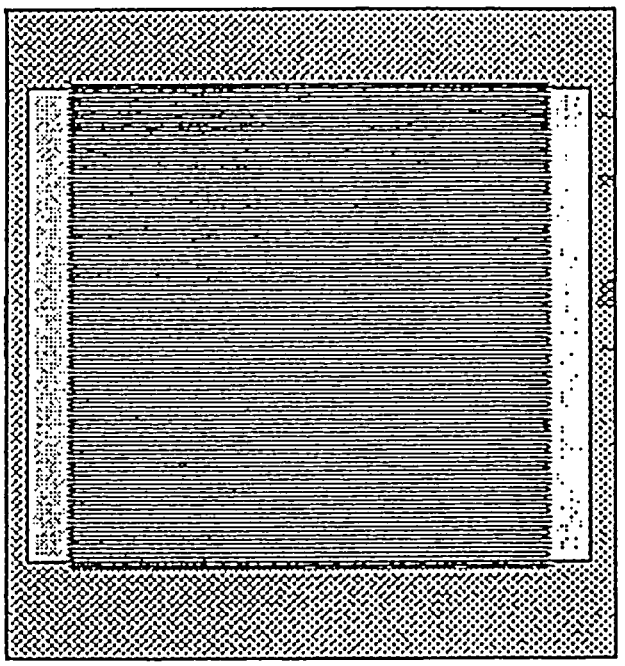

Moss Landing 6 & 7 (65ft x 36 ft)

Ormond Beach (52ft x 27ft)

Browns Ferry (50ft x 32ft)

Figure 4-5 Plan Dimension Comparison of Browns Ferry Condenser with Selected Database Condensers

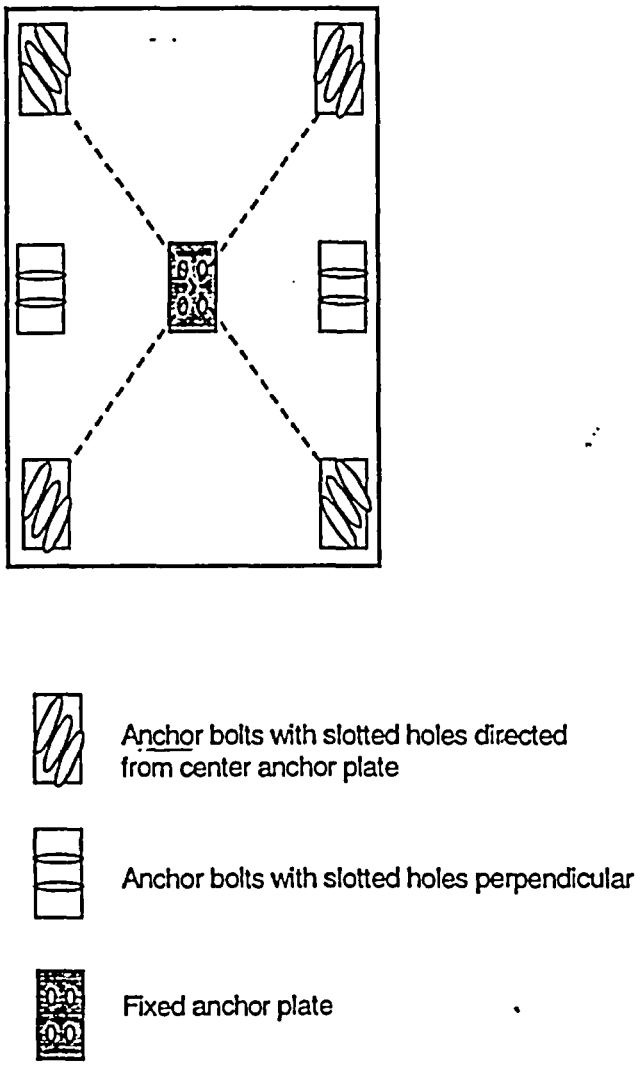

Figure 4-6 Schematic Plan View of Browns Ferry Condenser Anchorage

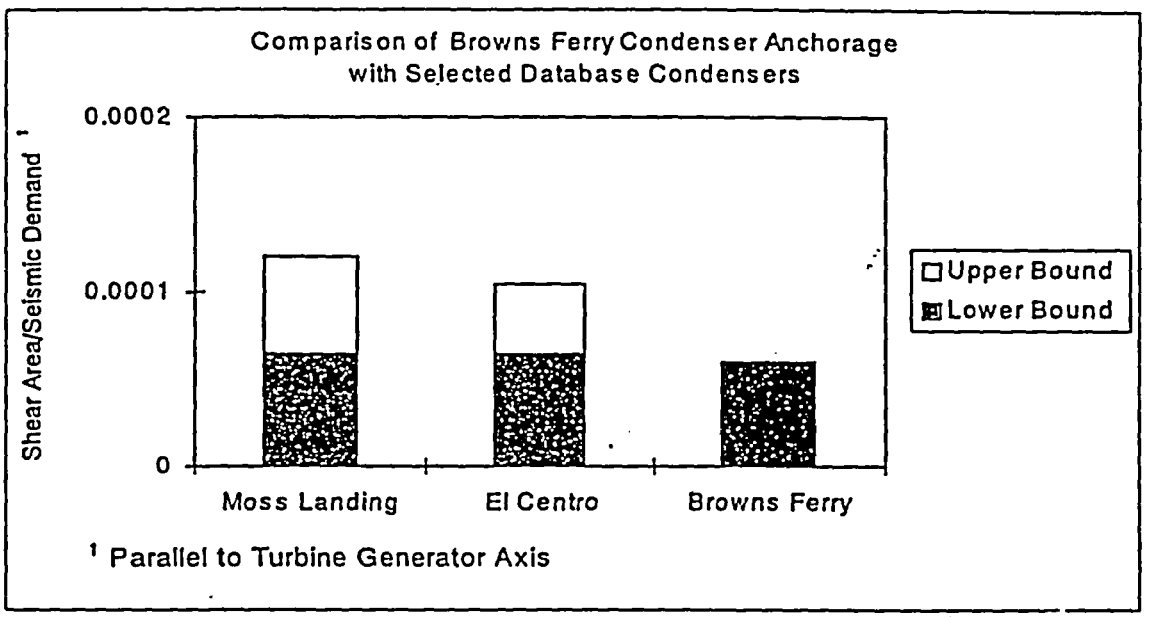

Figure 4-7 Comparison of Browns Ferry and Selected Database Condenser Anchorage to Seismic Demand for Direction Parallel to the Turbine Generator Axis

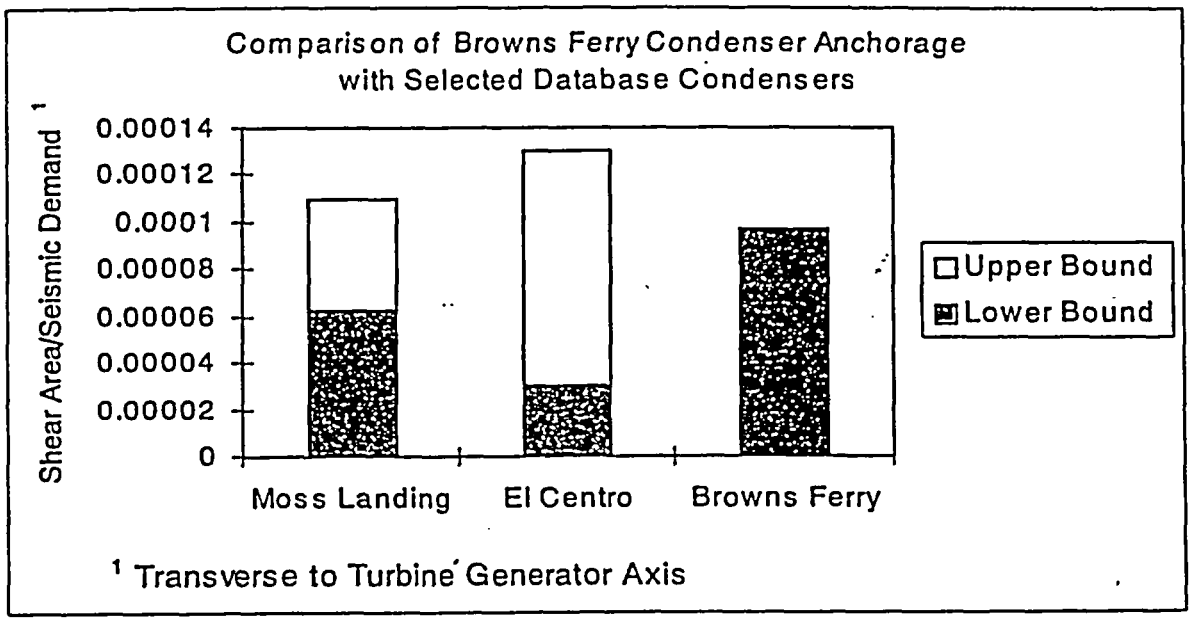

Figure 4-8 Comparison of Browns Ferry and Selected Database Condenser Anchorage to Seismic Demand for Direction Transverse to the Turbine Generator Axis

5. REFERENCES

1. "BWROG Report for Increasing MSIV Leakage Rate Limits and Elimination of Leakage Control Systems", GE NEDC-31858P, Revision 2, September 1993.

2. Safety Evaluation of GE Topical Report, NEDC-31858P, Revision 2, "BWROG Report for Increasing MSIV Leakage Rate Limits and Elimination of Leakage Control Systems", U.S. Nuclear Regulatory Commission, March 3, 1999.

3. "Browns Ferry - Unit 3, MSIV Seismic Verification Summary Report", EQE Report No. 200621-R-001, Revision 0, September 1998.

4. "Browns Ferry - Unit 2, MSIV Seismic Verification Summary Report", EQE Report No. 200918-R-001, Revision 0, August 1999.

5. "Generic Implementation Procedure (GIP) for Seismic Verification of Nuclear Plant Equipment", Rev. 2A, March 1993, Prepared by Winston & Strawn, EQE, et al., for the Seismic Qualification Utility Group (SQUG).

6. BFN Calculation No. CD-N0001-980039, "Main Steam Seismic Ruggedness Verification".

7. BFN Calculation No. CD-N0001-980038, "Main Steam Seismic Ruggedness Evaluation".

8. BFN General Design Criteria, BFN-50-C-7102, "Seismic Design", Revision 3.

9. BFN Detailed Design Criteria, BFN-50-C-7306, "Qualification Criteria for Seismic Class II Piping, Pipe Supports, and Components", Revision 1.

10. BFN Calculation No. CD-N0001-990113, "MSIV Seismic Evaluation Report". R1 R1

EQE INTERNATIONAL

CALCULATION COVER SHEET

Calculation No.	200918-C-002
Project:	TVA BFN MSIV LEAKAGE TECH SPEC CHANGE
Calculation Title:	ADDITIONAL SEISMIC EVALUATIONS FOR THE BFN CONDENSERS
References:	See Section 3.0
Attachments:	

Total Number of Pages (Including Cover Sheet): 15

Revision Number	Approval Date	Description of Revision	Originator	Checker	Approver
0	8/30/99	ORIGINAL ISSUE	F.R. BEIGI F.Beigi	J.O. DIZON J.O.Dizon	J.O. DIZON J.O.Dizon

Table of Contents

Page

1.0 PURPOSE 3

2.0 SCOPE & METHODOLOGY 3

3.0 REFERENCES 4

4.0 SEISMIC EVALUATIONS 5

5.0 CONCLUSION 15

Tables

Table 1 – Comparison of Browns Ferry and Selected Database Condensers 10

Figures

Figure 1 – Comparison of Browns Ferry DBE Ground Spectrum with Selected Database Site Ground Spectra 12

Figure 2 – Comparison of Browns Ferry DBE and Moss Landing Power Plant Ground Spectra 13

Figure 3 – Comparison of Browns Ferry DBE and Ormond Beach Power Plant Ground Spectra 14

						SHEET NO.	3
JOB NO.	200918	JOB	BFN MSIV TECH SPEC CHANGE	BY	[illegible]	DATE	8-24-99
CALC. NO.	C-002	SUBJECT	ADDITIONAL SEISMIC EVALUATIONS FOR THE BFN CONDENSERS	CHK	[illegible]	DATE	8/30/99

1.0 PURPOSE

The purpose of this calculation is to document the results of the additional seismic evaluation performed on the BFN condensers, as part of the seismic adequacy verification of the components associated with the MSIV Alternate Leakage Treatment (ALT) pathway.

2.0 SCOPE & METHODOLOGY

The BFN condensers are the terminal boundary points of the MSIV alternate leakage treatment (ALT) pathway, hence, they are necessary to maintain structural integrity following a Design Basis Earthquake (DBE). The condensers are located in the Turbine Building and are not designated as Seismic Class I systems.

As part of the plant specific seismic verification of the non-seismic components using the earthquake experience-based approach as outlined in the BWROG Report (Reference 1), the following reviews are performed to demonstrate that the BFN condensers fall within the bounds of the experience database and/or exhibit adequate seismic capacity:

- Review of the condenser design codes and standards, design characteristics and parameters, and support/anchorage configurations.
- Verification walkdown to identify potential seismic interaction concerns.
- Engineering evaluations of the condenser and support configurations.

The BFN condensers are evaluated using both seismic experience data from past earthquakes and engineering analysis. Analytical evaluations of the condenser and support anchorage are performed in accordance with the guidelines in the Generic Implementation Procedure (GIP, Reference 5), and the general requirements of the American Institute of Steel Construction (AISC, Reference 6), as applicable.

3.0 REFERENCES

1. "BWROG Report for Increasing MSIV Leakage Rate Limits and Elimination of Leakage Control Systems", GE NEDC-31858P, Revision 2, September 1993.

2. Safety Evaluation of GE Topical Report, NEDC-31858P, Revision 2, "BWROG Report for Increasing MSIV Leakage Rate Limits and Elimination of Leakage Control Systems", U.S. Nuclear Regulatory Commission, March 3, 1999.

3. "Browns Ferry - Unit 2, MSIV Seismic Verification Summary Report", EQE Report No. 200918-R-001, Revision 0, August 1999.

4. "Browns Ferry - Unit 3, MSIV Seismic Verification Summary Report", EQE Report No. 200621-R-001, Revision 0, September 1998.

5. "Generic Implementation Procedure (GIP) for Seismic Verification of Nuclear Plant Equipment", Rev. 2A, March 1993, Prepared by Winston & Strawn, EQE, et al., for the Seismic Qualification Utility Group (SQUG).

6. AISC, "Manual of Steel Construction", Eighth Edition, 1980.

7. TVA Calculation No. CD-N0001-980039, "Main Steam Seismic Ruggedness Verification".

8. TVA Calculation No. CD-N0001-980038, "Main Steam Seismic Ruggedness Evaluation".

9. ASME, "Boiler and Pressure Vessel Code, Section III, Division I, Appendices", 1980 Edition.

4.0 SEISMIC EVALUATIONS

The BFN condensers consist of three single-pass, single pressure, radial flow type surface condensers. Each condenser is located beneath each of the three low pressure turbines, and is structurally independent. Table 1 lists the design data for BFN condensers and for the two experience database sites listed in the BWROG Report (i.e., Moss Landing 6 & 7, and Ormond Beach 1 & 2). Design characteristic comparisons of the BFN condensers with the above two selected database condensers are presented in details in Reference 8. These include size (surface area), weight, height, and plan comparisons. The BFN condenser design data is comparable to the data for these two database sites.

The BFN condenser anchorage was compared with the performance of similar condenser in the earthquake experience database. The shear areas of the condenser anchorage, in the directions parallel and transverse to the turbine generator axis, divided by the seismic demand, were used to compare with those presented in the BWROG Report (Reference 1). The BFN condenser anchorage shear area to seismic demand is substantially greater than the selected database sites. The condenser support anchorage was also evaluated and the results indicate that the combined seismic DBE and operational demand is less than the anchorage capacity based on the AISC allowables. Maximum stress ratios are 0.70 for bolt tension in the perimeter support feet, and 0.86 for shear in the center support built-up section. Detailed description of the BFN condenser support anchorage and anchorage evaluations are presented in Reference 8.

A composite comparison of the ground response spectra of selected earthquake experience database sites with the conservatively estimated BFN DBE ground spectrum (i.e., 0.2g Housner input spectrum at rock outcrop scaled by 1.6 to account for soil amplification) is shown in Figure 1. In general, the earthquake experience database sites have experienced strong ground motions that are in excess of the BFN DBE at the frequency range of interest (i.e., about 1 Hz. and above), with the exception of the Ormond Beach site. Many of the database site ground motions envelope the conservatively estimated BFN DBE ground spectrum by large factors in various frequency bands within the 1 Hz. and above range. Figures 2 and 3 show the individual comparison plots of the conservatively estimated BFN DBE ground spectrum with the Moss Landing and Ormond Beach site spectra, respectively.

EQE INTERNATIONAL

JOB NO.	200918	JOB	BFN MSIV TECH SPEC CHANGE	BY	B	SHEET NO.	6
CALC. NO.	C-002	SUBJECT	ADDITIONAL SEISMIC EVALUATIONS FOR THE BFN CONDENSERS	CHK	JD	DATE	8-24-99
						DATE	8/30/99

The Ormond Beach Power Plant was affected by the magnitude 5.8, Point Mugu Earthquake in 1973, which was considered to be a relatively moderate earthquake, and was substantially lower than the 1989 Loma Prieta Earthquake (Magnitude 7.1) as experienced in the Moss Landing Power Plant as well as those experienced by most of the other database sites.

To ensure that adequate seismic margins exist in the BFN condensers in the event of a plant DBE, additional seismic evaluation was performed to verify the overall structural integrity of the condensers, as shown in pages 7 to 9 of this calculation. Results of the evaluation indicate that the condenser shell stresses due to the seismic DBE loads are small. Maximum stress ratios, based on AISC allowables, are 0.12 for combined axial and bending and 0.10 for shear.

EQE INTERNATIONAL

SHEET NO. 7

JOB NO. 200918 JOB BFN MSIV BY 7Bai DATE 8-24-9
CALC. NO. C-002 SUBJECT Condenser Shell Evaluation CHK'D SOB DATE 8/30/9

CONDENSER SHELL

Check combined stresses in the condenser shell due to seismic Loads (DBE).

From Figure 1, BFN 5% damped DBE Ground spectrum

a_h = horizontal acceleration = 0.32g
a_v = vertical acceleration = 0.2g (2/3 × horiz.)

P = Condenser dead wt., including contents = 2070^k (Ref. 8)

C.G. = Center of gravity of overall condenser = 12.72' (Ref. 8)

Condenser overall dimensions = 50' x 32' x 47.5'(h) (Ref. 8)
shell Thickness = 7/8"
shell Material = ASTM A285C (F_y = 30 ksi) (Ref. 9)

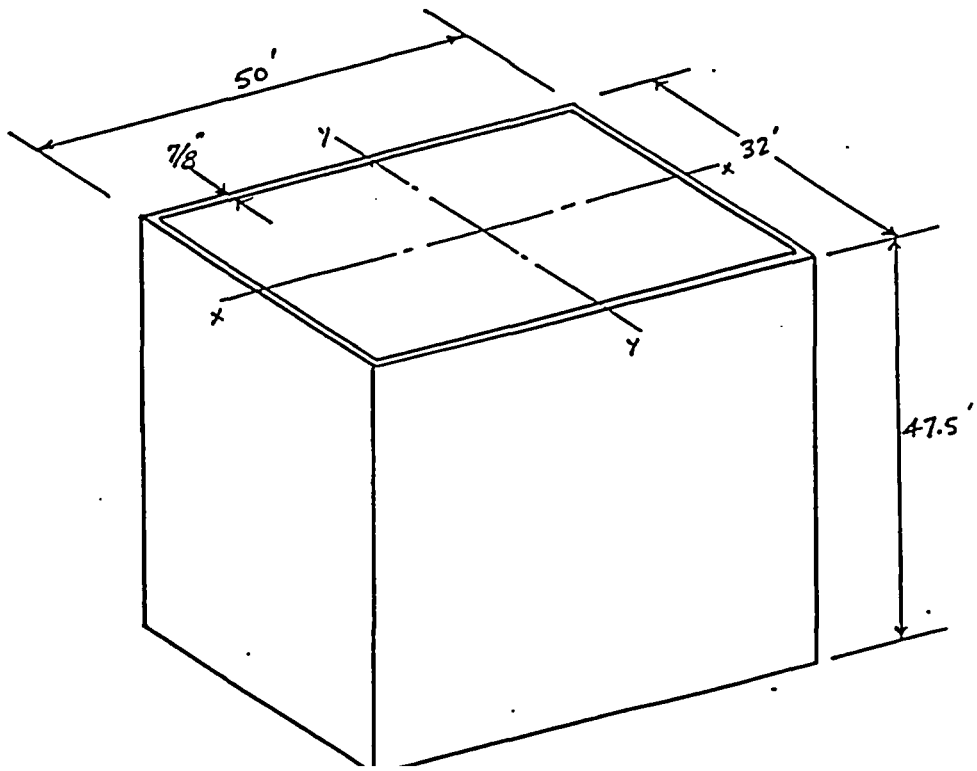

EQE INTERNATIONAL

SHEET NO. 8

JOB NO. 200918 JOB BFN MSIV BY ZBeji DATE 8-24-99
CALC. NO. C-002 SUBJECT Condenser Shell Evaluation CHK'D JD DATE 8/30/99

CONDENSER SHELL (CONT'd)

- section properties :

$$A = (7/8'')(2)(50' + 32')(12) = 1722 \quad in^2$$

$$I_{xx} = 2 \times \frac{7/8\,(32' \times 12)^3}{12} + 2 \times (7/8 \times 50' \times 12)\left(\frac{32' \times 12}{2}\right)^2 = 4.70 \times 10^7 \quad in^4$$

$$\Rightarrow \quad S_{xx} = \frac{I_{xx}}{(32' \times 12)/2} = 2.45 \times 10^5 \quad in^3$$

$$I_{yy} = 2 \times \frac{7/8\,(50' \times 12)^3}{12} + 2 \times (7/8 \times 32' \times 12)\left(\frac{50' \times 12}{2}\right)^2 = 9.20 \times 10^7 \quad in^4$$

$$\Rightarrow \quad S_{yy} = \frac{I_{yy}}{(50' \times 12)/2} = 3.07 \times 10^5 \quad in^3$$

- Axial + Bending stresses

$$f_a = \frac{P(1+a_v)}{A} = \frac{207^k(1+0.2)}{1722} = 1.44 \quad ksi$$

$$f_{bx} = \frac{M}{S_{xx}} = \frac{(207^k \times 0.32g)(12.72' \times 12)}{2.45 \times 10^5} = 0.41 \quad ksi$$

$$f_{by} = \frac{M}{S_{yy}} = \frac{(207^k \times .32g)(12.72' \times 12)}{3.07 \times 10^5} = 0.33 \quad ksi$$

Combined stress $= f_a + f_{bx} + f_{by} = 1.44 + .41 + .33 = 2.18$ ksi

AISC Allowables (Ref. 6)

$$F_b = 0.6 \times 30^{ksi} = 18 \text{ ksi} \quad \gg \quad 2.18 \text{ ksi} \quad \underline{ok}$$

$$D/C = \frac{2.18}{18} = 0.12 \quad \ll 1.0 \quad \underline{ok}$$

EQE INTERNATIONAL

SHEET NO. 9

JOB NO. 200918 JOB BFN MSIV BY FBeij DATE 8-24-99
CALC. NO. C-002 SUBJECT Condenser shell Evaluation CHK'D SBD DATE 8/30/99

CONDENSER SHELL (Cont'd)

- Shear

$P_H = P \times a_x = 2070^k \times 0.32g = 662.4^k$

$A_V = 2 \times (32' \times 12)\ 7/8'' = 672\ IN^2$

$f_v = \frac{662.4}{672} = 1.0\ ksi$

$F_V = 0.4 \times 30 = 12\ ksi \gg f_v = 1.0\ ksi$ ok

$D/C = \frac{1.0}{12} = 0.1 \ll 1.0$ ok

EQE INTERNATIONAL

JOB NO.	200918	JOB	BFN MSIV TECH SPEC CHANGE	BY	B	SHEET NO.	10
CALC. NO.	C-002	SUBJECT	ADDITIONAL SEISMIC EVALUATIONS FOR THE BFN CONDENSERS	CHK	JD	DATE	8/24/99
						DATE	8/30/99

Table 1

Comparison of Browns Ferry and Selected Database Condensers

Design Attributes	Moss Landing Units 6 & 7	Ormond Beach Units 1 & 2	Browns Ferry
Condenser Manufacturer	Ingersoll-Rand	Southwestern	Foster Wheeler
Flow Type	Single Pass	Single Pass	Single Pass
Condenser Dimensions (LxWxH)	65 ft. x 36 ft. x 47 ft.	52 ft. x 27 ft. x 20 ft.	58 ft. x 32 ft. x 47 ft.
Condenser Surface Area	435,000 sq. ft.	210,000 sq. ft.	222,000 sq. ft.
Condenser Shell Material	Cu Bearing ASTM A-285C	Cu Bearing ASTM A-285C	ASTM A-285C
Condenser Shell Thickness	3/4"	3/4"	7/8"
Condenser Operating Weight	3,115 kips	1,767 kips	2,076 kips
Tube Material	Al-Brass	90-10 Cu-Ni	Al-6XN
Tube Size	1" dia.	1" dia.	7/8" dia.
Tube Length	65 ft.	53 ft.	50 ft.
Tube Wall Thickness	18 BWG	20 BWG	22 BWG

EQE INTERNATIONAL

JOB NO.	200918	JOB	BFN MSIV TECH SPEC CHANGE	BY	B	SHEET NO.	11
CALC. NO.	C-002	SUBJECT	ADDITIONAL SEISMIC EVALUATIONS FOR THE BFN CONDENSERS	CHK	JOD	DATE	8/24/99
						DATE	8/30/99

Table 1 (cont.)

Comparison of Browns Ferry and Selected Database Condensers

Design Attributes	Moss Landing Units 6 & 7	Ormond Beach Units 1 & 2	Browns Ferry
Number of Tubes	25,590	15,220	19,480
Tube Sheet Material	Muntz	Muntz	ASTM A-285C
Tube Sheet Thickness	1-1/2"	1-1/4"	1-1/4"
No. of Tube Support Plates	15	14	15
Tube Support Plate Material	Not Given	Cu Bearing ASTM A-285C	ASTM A-285C
Tube Support Plate Thickness	3/4"	5/8"	7/8"
Tube Support Plate Spacing	48 in.	36 in.	39 in.
Water Box Material	2% Ni Cast Iron ASTM A-48 Class 30	Cu Bearing ASTM A-285C	ASTM A-285C
Expansion Joint	Rubber Belt	Stainless Steel	Rubber Belt
Hotwell Capacity	20,000 gal.	34,338 gal.	28,000 gal. (max.)

EQE INTERNATIONAL

JOB NO.	200918	JOB	BFN MSIV TECH SPEC CHANGE	BY	B	SHEET NO.	12
CALC. NO.	C-002	SUBJECT	ADDITIONAL SEISMIC EVALUATIONS FOR THE BFN CONDENSERS	CHK	JD	DATE	8/24/99
						DATE	8/30/99

Figure 1
Comparison of Browns Ferry DBE Ground Spectrum with Selected Database Site Spectra

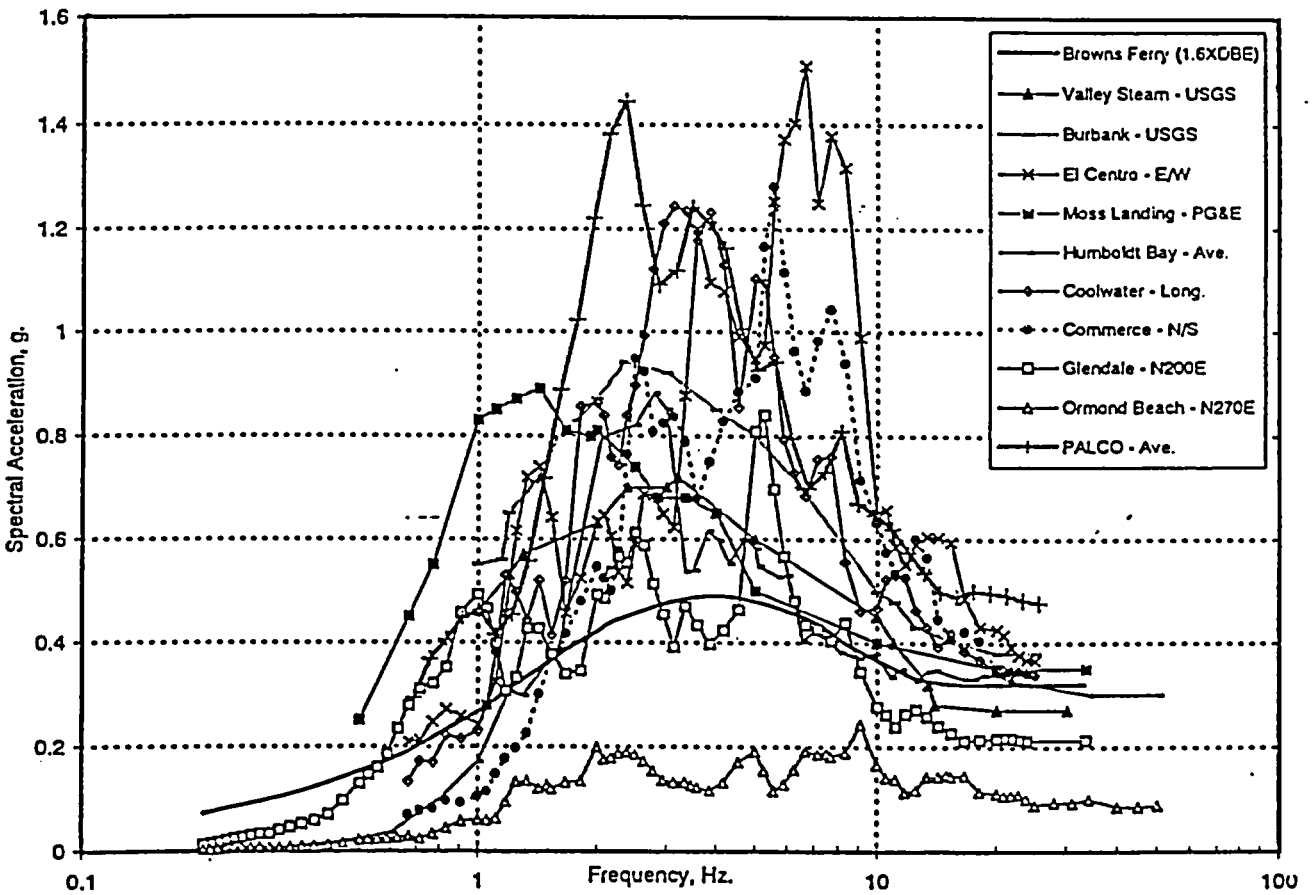

JOB NO.	200918	JOB	BFN MSIV TECH SPEC CHANGE	BY		SHEET NO. 13
CALC. NO.	C-002	SUBJECT	ADDITIONAL SEISMIC EVALUATIONS FOR THE BFN CONDENSERS	CHK		DATE 8/24/99
						DATE 8/30/99

Figure 2
Comparison of Browns Ferry DBE and Moss Landing Power Plant Ground Spectra

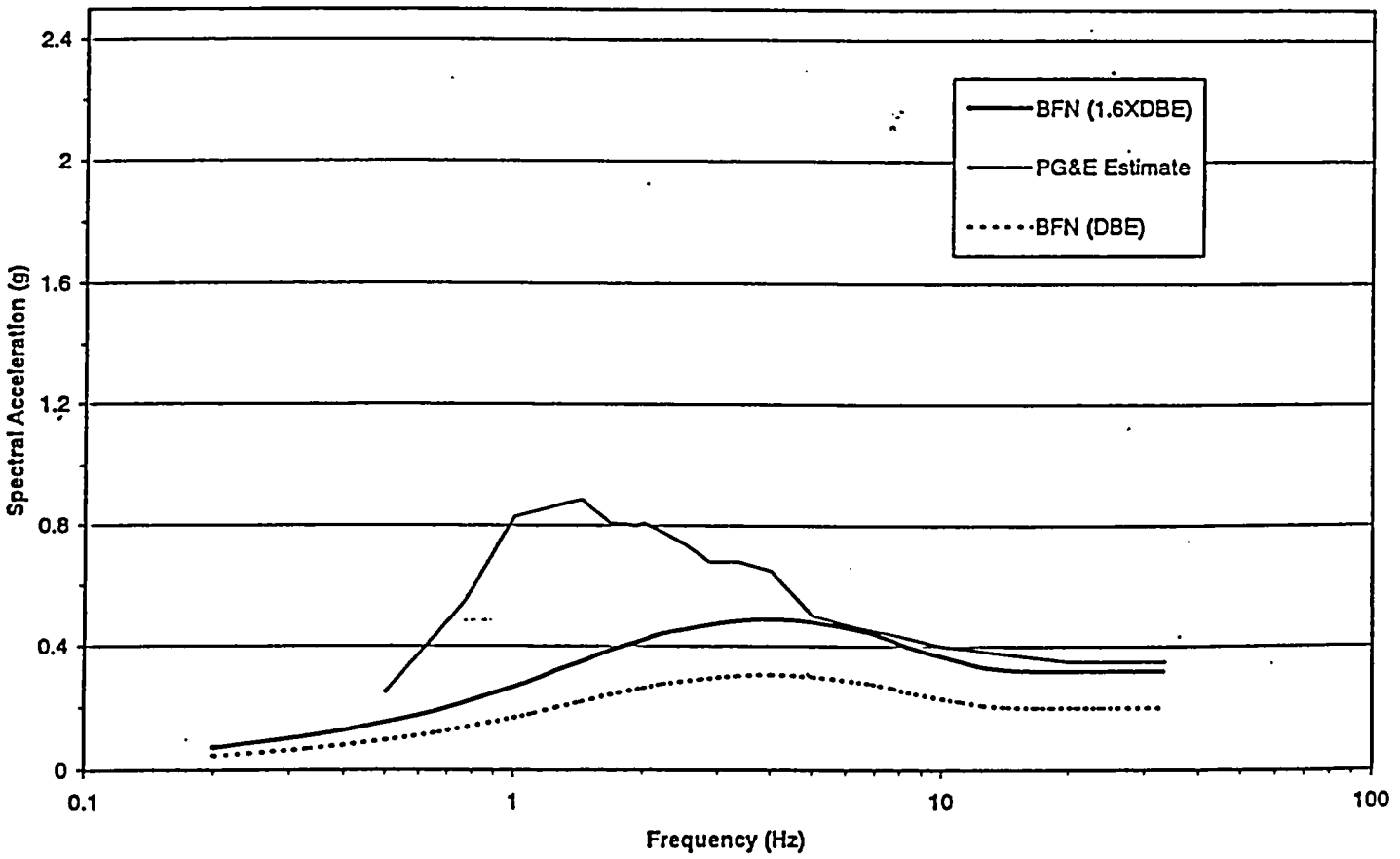

EQE INTERNATIONAL

JOB NO.	200918	JOB	BFN MSIV TECH SPEC CHANGE	BY	73	SHEET NO. 14
CALC. NO.	C-002	SUBJECT	ADDITIONAL SEISMIC EVALUATIONS FOR THE BFN CONDENSERS	CHK	JOD	DATE 8/24/99 DATE 8/30/99

Figure 3
Comparison of Browns Ferry DBE and Ormond Beach Power Plant Ground Spectra

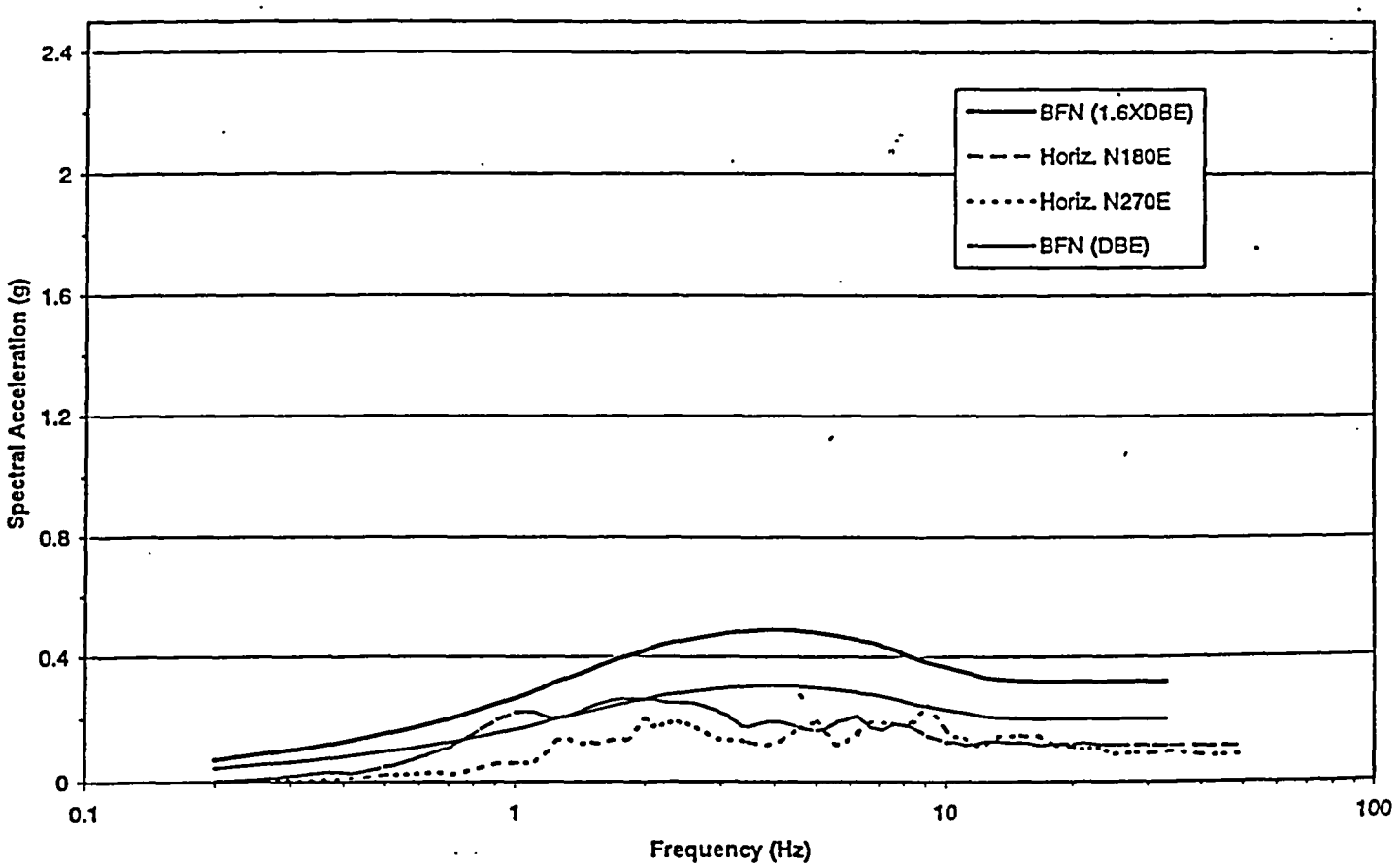

5.0 CONCLUSIONS

The comparisons of the condenser seismic experience data, supplemented by the additional condenser evaluation and the anchorage capacity evaluations demonstrate that the conclusions presented in the BWROG Report (Reference 1) can be applied to the BFN condensers. That is, a significant failure of the condenser in the event of a DBE at BFN is highly unlikely and contrary to the large body of historical earthquake experience data.

EQE INTERNATIONAL

CALCULATION COVER SHEET

Calculation No.	200918-C-001
Project:	TVA BFN MSIV LEAKAGE TECH SPEC CHANGE
Calculation Title:	SEISMIC VERIFICATION OF THE MS DRAIN PIPING AND SUPPORTS ASSOCIATED WITH THE MSIV ALTERNATE LEAKAGE TREATMENT PATHWAY
References:	See Section 3.0
Attachments:	

Total Number of Pages (Including Cover Sheet): 29

Revision Number	Approval Date	Description of Revision	Originator	Checker	Approver
0	8/30/99	ORIGINAL ISSUE	F.R. BEIGI FBeigi	J.O. DIZON J.O. Dizon	J.O. DIZON J.O. Dizon

Table of Contents

Page

1.0 PURPOSE 3

2.0 SCOPE & METHODOLOGY 3

3.0 REFERENCES 4

4.0 SEISMIC EVALUATIONS 5

5.0 CONCLUSIONS 29

Tables

Table 1 – Design Basis for Browns Ferry ALT Related Piping and Supports 16

Table 2 – Seismic Experience Database Piping Data 19

Table 3 – Comparison of Browns Ferry and Selected Database Piping Parameters 25

Table 4 – Bounding Evaluations of Typical Support Configurations 26

Figures

Figure 1 – Comparison of Database Site Spectra to Browns Ferry DBE Ground Spectrum 27

Figure 2 – Comparison of Browns Ferry and Selected Database Piping D/t Ratios 28

1.0 PURPOSE

The purpose of this calculation is to document the seismic adequacy verification of the main steam drain piping and related supports that are associated with the MSIV Alternate Leakage Treatment (ALT) pathway.

2.0 SCOPE & METHODOLOGY

The MSIV alternate leakage treatment (ALT) piping systems and related components at Browns Ferry, i.e., those portions downstream of the outboard Main Steam Isolation Valves (MSIV's) and the outboard Main Steam Drain Isolation Valve (MSDIV), are located in the Turbine Building and are not designated as Seismic Class I systems.

As part of the plant specific seismic verification of the non-seismic ALT piping, related supports and components using the earthquake experience-based approach as outlined in the BWROG Report (Reference 1), the following reviews will be performed to demonstrate that the piping and related supports fall within the bounds of the experience database:

- Review of the design codes and standards, piping design parameters, and support configurations.
- Seismic verification walkdown to identify potential piping concerns.
- Seismic evaluations of selected bounding support configurations.

Support evaluations will be performed in accordance to the general requirements of the American Institute of Steel Construction (AISC, Reference 6).

						SHEET NO.	4
JOB NO.	200918	JOB	BFN MSIV TECH SPEC CHANGE	BY	78ej	DATE	8-23-99
CALC. NO.	C-001	SUBJECT	SEISMIC VERIFICATION OF THE MSIV ALT PIPING AND SUPPORTS	CHK	JDS	DATE	8/30/99

3.0 REFERENCES

1. "BWROG Report for Increasing MSIV Leakage Rate Limits and Elimination of Leakage Control Systems", GE NEDC-31858P, Revision 2, September 1993.

2. Safety Evaluation of GE Topical Report, NEDC-31858P, Revision 2, "BWROG Report for Increasing MSIV Leakage Rate Limits and Elimination of Leakage Control Systems", U.S. Nuclear Regulatory Commission, March 3, 1999.

3. "Browns Ferry - Unit 2, MSIV Seismic Verification Summary Report", EQE Report No. 200918-R-001, Revision 0, August 1999.

4. "Browns Ferry - Unit 3, MSIV Seismic Verification Summary Report", EQE Report No. 200621-R-001, Revision 0, September 1998.

5. "Generic Implementation Procedure (GIP) for Seismic Verification of Nuclear Plant Equipment", Rev. 2A, March 1993, Prepared by Winston & Strawn, EQE, et al., for the Seismic Qualification Utility Group (SQUG).

6. AISC, "Manual of Steel Construction", Eighth Edition, 1980.

7. USAS B31.1 - Power Piping, 1967. Also, ANSI/ASME B31.1 – Power Piping, 1983.

8. TVA Calculation No. CD-N0001-980039, "Main Steam Seismic Ruggedness Verification".

9. TVA Calculation No. CD-N0001-980038, "Main Steam Seismic Ruggedness Evaluation".

4.0 SEISMIC EVALUATIONS

In general, the Browns Ferry ALT piping systems are typically designed to the requirements of USAS B31.1-1967 code (Reference 7), and consist of welded steel pipe and standard support components. Support spacing generally meets the B31.1 recommended span. The design bases for the portions of piping associated with the ALT pathway to the condensers are tabulated in Table 1. Table 2 presents a general summary of the piping data that constitute the seismic experience data. Figure 1 shows the comparison of the selected database site spectra with Browns Ferry DBE ground spectrum which indicates that the BFN DBE ground spectrum is generally bounded by those of the earthquake experience database sites at the frequencies of interest. Hence, the use of earthquake experience-based approaching for demonstrating the seismic ruggedness of non-seismically analyzed piping and related components at BFN, consistent with the BWROG's recommendations, is appropriate. Comparison of Browns Ferry and selected database piping parameters is presented in Table 3, along with Figure 2, which presents a comparison of D/t ratios of the BFN ALT drain piping with those found in the database. Overall, the BFN piping design is similar to and well represented by those found in the experience database sites that have shown to perform well in past earthquakes.

Browns Ferry FSAR does not reference Appendix A to 10 CFR Part 100. As such, bounding analysis for the selected portion of the ALT piping system is not required (Reference 2). The seismic adequacy of the ALT piping is addressed by performing seismic verification walkdowns to identify specific design attributes associated with poor seismic performance, following the guidelines as presented in the BWROG Report (Reference 1). The results of the walkdowns, including the resolution of the identified outliers, were presented in the respective MSIV Walkdown Summary Reports for Units 2 and 3 (References 3 and 4).

Furthermore, bounding evaluations are performed for typical support configurations as shown in pages 6 to 15 of this calculation. Table 4 summarizes the results of the support and anchorage evaluations.

EQE INTERNATIONAL

SHEET NO. 6

JOB NO. 200918 JOB BFN MSIV BY 7Beij DATE 8-19-99
CALC. NO. C-001 SUBJECT Support Evaluations CHK'D JOD DATE 8/30/99

Support Assessment

Typical support configurations on the Main Steam Drain piping are shown below. These also represent the bounding configurations w.r.t. dimensions shown and the member sizes.

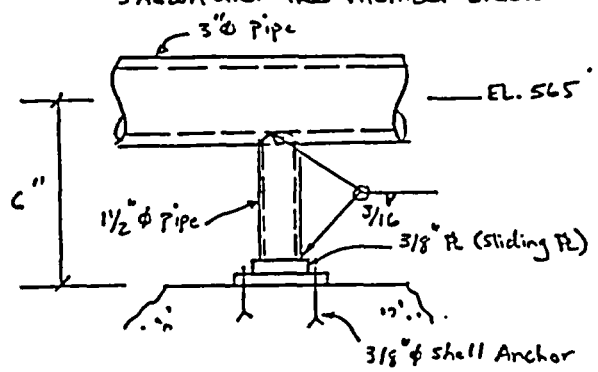

Type 1
(Ref. Hanger Mark No. MDH-12, 13, 18)

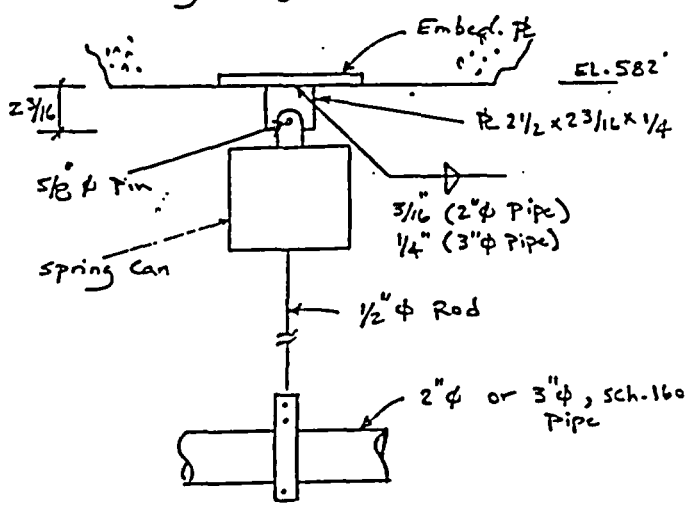

Type 2
(Ref. Hanger Mark No. MDH-15, 16, 17)

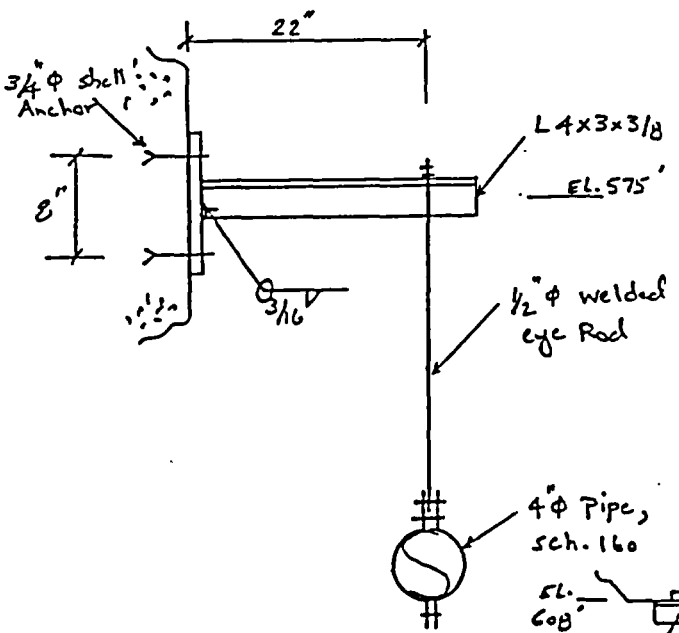

Type 3
(Ref. Hanger Mark No. MDH-19 to 25, 32, 33)

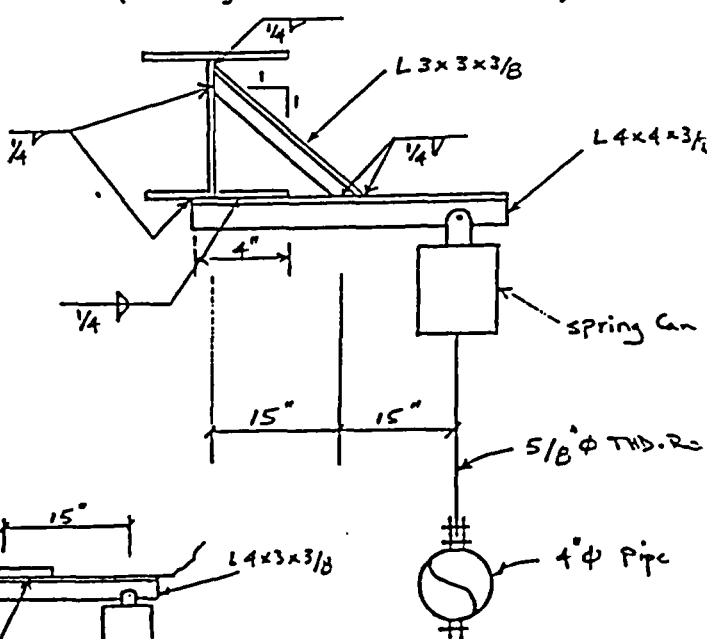

Type 4
(Ref. MDH-26 supplemented by walkdown notes)

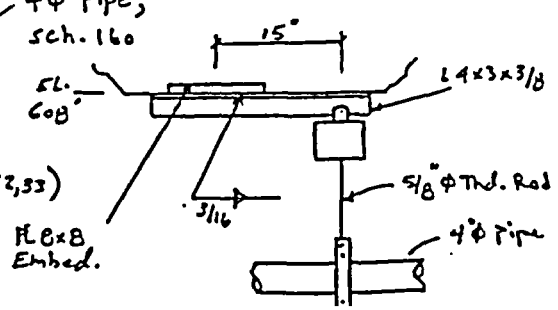

EQE INTERNATIONAL

SHEET NO. 7

JOB NO. 200918 JOB BFN MSIV BY ZBeiji DATE 8-19-99
CALC. NO. C-001 SUBJECT Support Evaluations CHK'D JD DATE 8/30/99

Support Assessment (cont'd)

- For conservatism and bounding purposes, in order to calculate the lower bound margin of safety for each support type shown, consider that all piping are insulated by 2" thick calcium silicate and the attachment point of the support is at EL. 608 of the TB building. Also, all pipe sizes will be considered to be 3"ϕ & 4"ϕ. Note that the wt. of steam in these lines is negligible.

- Applicable vertical acceleration is based on the BFN DBE spectra.

The Horizontal Peak accel corresponding to 1.6x Housner Design Spectrum @ EL. 519' (or TB ground response spectrum) is: $a^{Peak}_{h\,ground} = 0.5g$ (see fig.1, p.27)

Therefore the vertical peak accel. @ ground is calculated as: $a^{Peak}_{v\,ground} = 0.5g \times 2/3 \times \frac{1.1}{1.6} = 0.23\ g$ (Refs. 8 + 9)

The above vertical accel. needs to be amplified for consideration of the support location within the building. Conservatively, use an amplification factor of 1.5 (very conservative for vertical direction)

$$a^{Peak}_{v} = 0.23\ g \times 1.5 = 0.35\ g$$

- other relevant inputs are:

$w_{4"\phi}$ = weight of 4"ϕ pipe + 2" Cast Insulation

$$= 22.51\ lb/ft + \left(\frac{\pi}{4}(8.5^2 - 4.5^2)\frac{1}{12^2}\right) 11\ lb/ft^3$$

$$= 25.6\ lb/ft$$

$$w_{3"\phi} = 14.32\ lb/ft + \left(\frac{\pi}{4}(7.5^2 - 3.5^2)\frac{1}{12^2}\right) 11\ lb/ft^3$$

EQE INTERNATIONAL

SHEET NO. 8

JOB NO. 200918 JOB BEN MSIV BY ZBenji DATE 8-19-99
CALC. NO. C-001 SUBJECT Support Evaluations CHK'D VSD DATE 8/30/99

Support Assessment (cont'd)

- Per References 3 & 4 MSIV ALT piping spans correspond to ANSI B31.1 (Ref. 7)

$$\ell_{4''\phi} = 14'$$

$$\ell_{3''\phi} = 12'$$

- Therefore the DL + Seismic load to be considered for the support evaluations are:

$$P_{4''\phi} = (\omega_{4''\phi} \times \ell_{4''\phi}) \cdot (1 + a_V^{Peak})$$

$$= (25.6 \times 14')(1 + 0.35g)$$

$$= 484^{\#}$$

$$P_{3''\phi} = (\omega_{3''\phi} \times \ell_{3''\phi})(1 + a_V^{Peak})$$

$$= (17 \times 12')(1 + 0.35g)$$

$$= 275^{\#}$$

EQE INTERNATIONAL

SHEET NO. 9

JOB NO. 200918 JOB BFN MSIV BY ZBeji DATE 8-19-99
CALC. NO. C-001 SUBJECT support Evaluations CHK'D JB DATE 8/30/99

Support Assessment (Cont'd)

Type 1

Only the compression in the $1\frac{1}{2}''\phi$ support pipe needs to be checked.

Area of $1\frac{1}{2}''\phi$ sch. 40 pipe = 0.799 in^2

length of $1\frac{1}{2}''\phi$ support pipe $\cong 6''$

$$\frac{Kl}{r} = \frac{2.0 \times 6''}{0.623} = 19.3 \Rightarrow F_a = 20.66 \text{ ksi} \times 1.33 = 27.5 \text{ ksi}$$

(Ref. 6)

$$f_a = \frac{P_{\text{tot}}}{A} = \frac{275}{.799} = 344 \text{ psi}$$

$$\frac{f_a}{F_a} = \frac{.344}{27.5} = 0.01 \ll 1.0 \quad \underline{\text{ok}}$$

Type 2

The critical components in the load path for this support are the weld @ the welding lug to embed plate, the $5/8''\phi$ pin and the $1/2''\phi$ threaded rod.

- weld

$$l_w = 2 \times 2\tfrac{1}{2}'' = 5''$$

$$F_W = 0.3 \times 60 \times 0.707 \times \tfrac{1}{4}'' \times 1.33 = 4.23 \text{ k/in} \quad \text{(weld Material)}$$
$$= 0.4 \times 36 \times \tfrac{1}{4} \times 1.33 = 4.79 \text{ k/in} \quad \text{(Base Material)}$$

$$f_w = \frac{275}{5''} = 55 \text{ lb/in}$$

EQE INTERNATIONAL

SHEET NO. 10

JOB NO. 200918 JOB BFN MSIV BY ZBeji DATE 8-20-99
CALC. NO. C-001 SUBJECT Support Evaluations CHK'D JD DATE 8/30/99

Support Assessment (cont'd)

- 1/2" ϕ A36 Threaded rod

Root Area = .126 in^2

$f_t = \frac{275^{\#}}{.126} = 2.2$ ksi

$F_t = 19.1 \times 1.33 = 25.4$ ksi
(per Ref. 6)

$\frac{f_t}{F_t} = \frac{2.2}{25.4} = 0.09 \ll 1.0$ ok

- 5/8" ϕ pin

Area $= \frac{\pi}{4}(5/8)^2 = 0.31$ in^2

$f_v = \frac{275}{.31} = .89$ ksi

$F_v = 10 \times 1.33 = 13.3$ ksi
(Ref. 6)

$\frac{f_v}{F_v} = \frac{.89}{13.3} = 0.07 \ll 1.0$ ok

Type 3

- Check member bending

$M_{max} = 484^{\#} \times 22" = 10648$ lb-in

$S = 0.866$ in^3 (L4x3x3/8)

EQE INTERNATIONAL

SHEET NO. 11

JOB NO. 200918 JOB BFN MSIV BY ZBeiji DATE 8-20-99
CALC. NO. C-001 SUBJECT Support Evaluations CHK'D JDD DATE 8/30/99

Support Assessment (cont'd)

$$f_b = \frac{M}{S} = \frac{10648}{.866} = 12.3 \text{ ksi}$$

$$F_b = 0.6\,F_y = 21.6 \text{ ksi}$$ (conservative, i.e., no 1.33 factor used)

$$\frac{f_b}{F_b} = \frac{12.3}{21.6} = 0.57 < 1.0 \quad \underline{ok}$$

- check weld @ member - baseplate

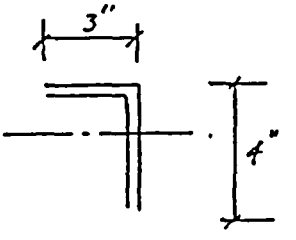

$$S_{W_{min}} = \frac{4^2(4\times3''+4'')}{6(2\times3''+4'')} \times 2 = 8.53 \text{ in}^2$$

$$\ell_W = (4+3)2 = 14''$$

$$f_W = \left[\left(\frac{10648}{8.53}\right)^2 + \left(\frac{484^{\#}}{14''}\right)^2\right]^{1/2} = 1.25 \text{ k/in}$$

$$F_{W_1} = 60\times0.3\times0.707\times3/16\times1.33 \doteq 3.17 \text{ k/in}$$ governs (Weld Mat.

OR

$$F_{W_2} = 0.4\times36\times3/16\times1.33 = 3.6 \text{ k/in}$$ (Base Mat.

$$\frac{f_W}{F_{W_1}} = \frac{1.25}{3.17} = 0.39 < 1.0 \quad \underline{ok}$$

- Anchor bolt

$$T = \text{tension per A.B.} = \frac{10648}{8''} = 1331^{\#}$$

$$V = \text{shear per A.B.} = \frac{484}{2} = 242^{\#}$$

EQE INTERNATIONAL

SHEET NO. 12

JOB NO. 200918 JOB BTN MSIV BY ZBeij DATE 8-20-99
CALC. NO. C-001 SUBJECT Support Evaluations CHK'D JOD DATE 8/30/99

Support Assessment (cont'd)

Reduction factor for unknown anchorage type, Ref. 5

$$T_{all} = 4.69^k \times \frac{3000}{4000} \times 0.6 = 2.11^k$$

Reduction for concrete strength (conservatively assumed $f'_c = 3000$ psi)

Allowable Tensile load for 3/4" ϕ Expansion anchor per Ref. 5, App. C

$$V_{all} = 5.48^k \times \frac{3000}{4000} \times 0.6 = 2.47^k$$

$$\frac{T}{T_{all}} + \frac{V}{V_{all}} = \frac{1.331}{2.11} + \frac{.242}{2.47} = 0.73 \quad < 1.0 \quad \text{ok}$$

- 1/2" ϕ Rod and 5/8" ϕ pin not critical by comparison to calc. performed for type 2 support.

Type 4

Member bending stress ok by comparison to Type 3 (15" lever arm compared to 22" for type 3).

- check brace welded connection

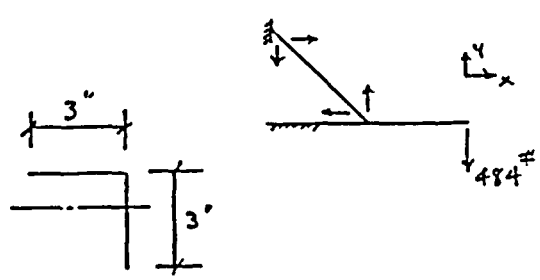

$$M = 484^{\#} \times 15'' = 7260^{\#''}$$

$$S_w = \frac{3^2(4 \times 3 + 3)}{6(2 \times 3 + 3)} = 2.5 \text{ in}^2$$

$$\ell_w = 3 + 3 = 6''$$

$$\text{axial force in brace} = \frac{7260}{15''}\sqrt{2} = 684^{\#}$$

EQE INTERNATIONAL

SHEET NO. 13

JOB NO. 200918 JOB BFN MSIV BY FBeiji DATE 8-20-99
CALC. NO. C-001 SUBJECT Support Evaluations CHK'D JOD DATE 8/30/99

Support Assessment (cont'd)

$f_{W_{1_Y}} = \frac{M}{S_W} = \frac{7260}{2.5} = 2.9$ K/IN

$f_{W_{2_Y}} = \frac{484}{6''} = .08$ K/IN

$f_{W_{3_X}} = \frac{484}{6'} = .08$ K/IN

$f_W = \left((2.9+.08)^2 + (.08)^2\right)^{1/2} = 2.98$ K/IN

$F_W = 4.23$ K/IN (see Type 2 support calc.)

$\frac{f_W}{F_W} = \frac{2.98}{4.23} = 0.70 < 1.0$ ok

- check weld @ L4x4 to the flange of the I-beam

$\ell_W = 2 \times 4'' = 8''$

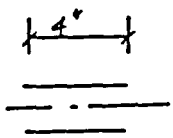

$f_{W_1} = \frac{484}{8''} = 60.5$ lb/IN

$f_{W_2} = \frac{484}{8''} = 60.5$ lb/IN

$f_W = (.061^2 + .061^2)^{1/2} = .09$ K/IN $\ll F_W$ ok

- 5/8" ϕ Rod and 5/8" ϕ pin are not critical by comparison to calc. performed for Type 2 support.

EQE INTERNATIONAL

SHEET NO. 14

JOB NO. 200918 JOB DFN MSIV BY FBeig DATE 8-20-99
CALC. NO. C-001 SUBJECT Support Evaluations CHK'D JOD DATE 8/30/99

Support Assessment (Cont'd)

Type 5

- Check weld @ L4x3 to embed pl.

$M = 484^{\#} \times 15'' = 7260^{\#''}$

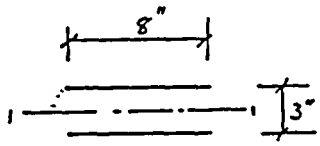

$S_{W_{1-1}} = 3'' \times 8'' = 24 \ in^2$

$l_W = 2 \times 8'' = 16''$

$f_{W_1} = \frac{M}{S_{W_{1-1}}} = \frac{7260}{24} = .3 \ K/IN$

$f_{W_2} = \frac{484}{16} = .03 \ K/IN$

$f_W = f_{W_1} + f_{W_2} = .3 + .03 = .33 \ K/IN$

$F_W = 3.17 \ K/IN$ (see Type 3 support Calc.)

$\frac{f_W}{F_W} = \frac{.33}{3.17} = 0.1 \ll 1.0$ ok

- Member bending stress is ok by comparison to Type 3 support member bending calculation (15" lever arm for type 5 vs. 22" for Type 3)

- 5/8"ϕ Rod and pin are not critical by comparison to calc. performed for Type 2 support.

EQE INTERNATIONAL

SHEET NO. 15

JOB NO. 200918 JOB BFN MSIV BY FBeji DATE 8-20-99
CALC. NO. C-001 SUBJECT Support Evaluations CHK'D JOB DATE 8/30/99

Support Assessment (cont'd)

The following Table summarizes the maximum D/C ratios (Demand/Capacity) for the typical supports on the MSIV drain piping.

Support Type	critical stress component	D/C
Type 1	Axial compression in support member	.01
Type 2	Tension in A36 Threaded rod	.09
Type 3	Anchor bolts	0.73
Type 4	Weld stress	0.70
Type 5	Weld stress	0.10

Table 1

Design Basis for Browns Ferry ALT Related Piping and Supports

Piping Description	Design Temp. (°F)	Design Press. (psig)	Pipe Size (NPS)	Pipe Sch.	D / t	Piping Material	Typical Support Types	Piping Design Basis
MS Lines from outboard MSIV's to MS Header and to Turbine Stop Valves	562	1146	24 1	80 160	20 5	ASTM A-106 Grade B	Spring hangers Vertical struts	USAS B31.1- 1967
Main Steam Header	562	1146	24	80	20	ASTM A-155 Grade KC-70	Spring hangers	USAS B31.1- 1967
MS Stop Valve Above Seat Leak-off	562	1146	1	160	5	ASTM A-106 Grade B	Rod hangers	USAS B31.1- 1967
Turbine Bypass Valve Header	562	1146	18	80	19	ASTM A-106 Grade B	Rigid supports Rod and Spring hangers	USAS B31.1- 1967
MS Steam Supply to RFP Turbine Stop Valves	562	1146	6 4	80 80	15 13	ASTM A-106 Grade B	Rod and Spring hangers Stanchion supports	USAS B31.1- 1967
MS Steam Supply from MS Header to SJAE's to the Condenser	562	1146	3 2 1-1/2 1	160 160 160 160	8 7 7 5	ASTM A-106 Grade B	Rod and Spring hangers	USAS B31.1- 1967

JOB NO. 200918 JOB BFN MSIV TECH SPEC CHANGE
CALC. NO. C-001 SUBJECT SEISMIC VERIFICATION OF THE MSIV ALT PIPING AND SUPPORTS
BY 7&i DATE 8-23-99
CHK DATE 8/30/99
SHEET NO. 17

Table 1 (cont.)

Design Basis for Browns Ferry ALT Related Piping and Supports

Piping Description	Design Temp. (°F)	Design Press. (psig)	Pipe Size (NPS)	Pipe Sch.	D / t	Piping Material	Typical Support Types	Piping Design Basis
MS Steam Supply to Steam Seal Regulators	562	1146	4	80	13	ASTM A-106 Grade B	Rod hangers	USAS B31.1- 1967
MS Steam Supply from MS Header to the Off-Gas Preheaters A & B	562	1146	2	160	7	ASTM A-106 Grade B	Rod hangers	USAS B31.1- 1967
			2	160	7	ASTM A-335 Grade P11	New piping associated with the proposed installation of new boundary valves to Preheaters A & B	
MS Outboard Drains from MS Lines to the Main Drain Line	562	1146	3 2 1	160 160 160	8 7 5	ASTM A-106 Grade B	Stanchion supports	USAS B31.1- 1967
			3 2	160 160	8 7	ASTM A-333 Grade 1		
Main Drain Line to the Condenser	562 / 450	1146 / 400	4 3 1	80 160 160	13 8 5	ASTM A-106 Grade B	Rod and Spring hangers Stanchion supports	USAS B31.1- 1967

Table 1 (cont.)

Design Basis for Browns Ferry ALT Related Piping and Supports

Piping Description	Design Temp. (°F)	Design Press. (psig)	Pipe Size (NPS)	Pipe Sch.	D / t	Piping Material	Typical Support Types	Piping Design Basis
HPCI Drain to MS Drain; RCIC Drain to HPCI Drain; Aux. Boiler Drains to HPCI/RCIC/ Reactor Building Drain Line	450	400	2 1	160 160	7 5	ASTM A-106 Grade B	Rigid supports	USAS B31.1- 1967
	270	415	1	160	5			
Misc. PT Instrument Lines Sample Lines to Sample Station	562	1146	1	160	5	ASTM A-106 Grade B	Rigid supports	USAS B31.1- 1967
			¼" tubing	.049" (wall t)	--	ASTM A-213 SS Gr. TP-304	Rigid supports (tube clamps)	--

EQE INTERNATIONAL

JOB NO.	200918	JOB	BFN MSIV TECH SPEC CHANGE	BY	FBij	DATE	8-23-99
CALC. NO.	C-001	SUBJECT	SEISMIC VERIFICATION OF THE MSIV ALT PIPING AND SUPPORTS	CHK	JOD	DATE	8/30/99

SHEET NO. 19

Table 2

Seismic Experience Database Piping Data

Facility	Pipe Size (NPS)	Pipe O.D. (inch)	Schedule	Wall Thickness (inch)	D/t
Valley Steam Plant Units 1 & 2	24	24.0	20	0.375	64
	20	20.0	20	0.375	53
	18	18.0	30	0.437	41
	16	16.0	30	0.375	43
	14	14.0	30	0.375	37
	12	12.75	40	0.406	31
	12	12.75	30	0.330	39
	10	10.75	160	1.125	10
	8	8.625	160	0.906	10
	6	6.625	40	0.280	24
	4	4.50	160	0.531	8
	4	4.50	40	0.237	19
	3	3.50	160	0.437	8
	3	3.50	80	0.300	12
	3	3.50	40	0.216	16
	2	2.375	160	0.343	7
	2	2.375	40	0.154	15
	1½	1.90	160	0.281	7
	1½	1.90	40	0.145	13
	1	1.315	40	0.133	10
	¾	1.05	160	0.218	5
	¾	1.05	40	0.113	9

Table 2 (cont.)

Seismic Experience Database Piping Data

Facility	Pipe Size (NPS)	Pipe O.D. (inch)	Schedule	Wall Thickness (inch)	D/t
El Centro Steam Plant	20	20.0	STD	0.375	53
	18	18.0	160	1.781	10
	18	18.0	XS	0.500	36
	18	18.0	STD	0.375	48
	14	14.0	40	0.437	32
	14	14.0	STD	0.375	37
	12	12.75	160	1.312	10
	12	12.75	STD	0.375	34
	10	10.75	40	0.365	29
	8	8.625	160	0.906	10
	8	8.625	120	0.718	12
	8	8.625	40	0.322	27
	6	6.625	120	0.562	12
	6	6.625	40	0.280	24
	4	4.50	80	0.337	13
	4	4.50	40	0.237	19
	3	3.50	160	0.437	8
	3	3.50	80	0.300	12
	3	3.50	40	0.216	16
	2	2.375	160	0.343	7
	2	2.375	80	0.218	11
	2	2.375	40	0.154	15
	1½	1.90	160	0.281	7
	1½	1.90	80	0.200	10
	1½	1.90	40	0.145	13
	1	1.315	80	0.179	7
	1	1.315	40	0.133	10
	¾	1.05	80	0.154	7
	¾	1.05	40	0.113	9

EQE INTERNATIONAL

						SHEET NO.	21
JOB NO.	200918	JOB	BFN MSIV TECH SPEC CHANGE	BY	[illegible]	DATE	8-23-99
CALC. NO.	C-001	SUBJECT	SEISMIC VERIFICATION OF THE MSIV ALT PIPING AND SUPPORTS	CHK	[illegible]	DATE	8/30/99

Table 2 (cont.)

Seismic Experience Database Piping Data

Facility	Pipe Size (NPS)	Pipe O.D. (inch)	Schedule	Wall Thickness (inch)	D/t
Moss Landing Units 1, 2 & 3	16	16.0	--	1.394	11
	12	12.75	--	1.148	11
	8	8.625	160	0.906	10
	8	8.625	30	0.277	31
	6	6.625	160	0.562	12
	6	6.625	40	0.280	24
	4	4.50	160	0.531	8
	4	4.50	80	0.337	13
	4	4.50	40	0.237	19
	3	3.50	160	0.437	8
	3	3.50	80	0.300	12
	3	3.50	40	0.216	16
	2	2.375	160	0.343	7
	2	2.375	80	0.218	11
	2	2.375	40	0.154	15
	1½	1.90	160	0.281	7
	1½	1.90	80	0.200	10
	1	1.315	160	0.250	5
	1	1.315	80	0.179	7
	¾	1.05	160	0.218	5
	¾	1.05	80	0.154	7

Table 2 (cont.)

Seismic Experience Database Piping Data

Facility	Pipe Size (NPS)	Pipe O.D. (inch)	Schedule	Wall Thickness (inch)	D/t
Moss Landing Units 4 & 5	24	24.0	40	0.687	35
	24	24.0	--	1.066	23
	--	18.8	--	2.287	8
	16	16.0	40	0.500	32
	16	16.0	--	0.902	18
	--	13.2	--	1.668	8
	8	8.625	160	0.906	10
	8	8.625	40	0.322	27
	6	6.625	160	0.562	12
	6	6.625	40	0.280	24
	4	4.50	160	0.531	8
	4	4.50	80	0.337	13
	4	4.50	40	0.237	19
	3	3.50	160	0.437	8
	3	3.50	80	0.300	12
	3	3.50	40	0.216	16
	2	2.375	160	0.343	7
	2	2.375	80	0.218	11
	2	2.375	40	0.154	15
	1½	1.90	160	0.281	7
	1½	1.90	80	0.200	10
	1½	1.90	40	0.145	13
	1	1.315	160	0.250	5
	1	1.315	80	0.179	7
	1	1.315	40	0.133	10
	¾	1.05	160	0.218	5
	¾	1.05	80	0.154	7
	¾	1.05	40	0.113	9

EQE INTERNATIONAL

SHEET NO. 23

JOB NO.	200918	JOB	BFN MSIV TECH SPEC CHANGE	BY	Zaeji	DATE	8-23-99
CALC. NO.	C-001	SUBJECT	SEISMIC VERIFICATION OF THE MSIV ALT PIPING AND SUPPORTS	CHK	JOD	DATE	8/30/99

Table 2 (cont.)

Seismic Experience Database Piping Data

Facility	Pipe Size (NPS)	Pipe O.D. (inch)	Schedule	Wall Thickness (inch)	D/t
Moss Landing Units 6 & 7	30	30.0	--	0.632	47
	26	26.0	--	1.128	23
	18	18.0	--	3.444	5
	12	12.75	--	2.444	5
	12	12.75	--	0.601	21
	8	8.625	--	1.650	5
	8	8.625	40	0.322	27
	6	6.625	--	1.268	5
	6	6.625	40	0.280	24
	4	4.50	--	0.861	5
	4	4.50	80	0.337	13
	4	4.50	40	0.237	19
	3	3.50	80	0.300	12
	3	3.50	40	0.216	16
	2½	2.875	--	0.550	5
	2½	2.875	80	0.276	10
	2½	2.875	40	0.178	16
	2	2.375	--	0.519	5
	2	2.375	80	0.218	11
	2	2.375	40	0.154	15
	1½	1.90	--	0.428	4
	1½	1.90	80	0.200	10
	1½	1.90	40	0.145	13
	1	1.315	--	0.301	4
	1	1.315	80	0.179	7
	1	1.315	40	0.133	10
	¾	1.05	160	0.218	5
	¾	1.05	80	0.154	7
	¾	1.05	40	0.113	9
	½	1.05	--	0.210	4
	¼	0.54	--	0.153	4

Table 2 (cont.)

Seismic Experience Database Piping Data

Facility	Pipe Size (NPS)	Pipe O.D. (inch)	Schedule	Wall Thickness (inch)	D/t
Ormond Beach Units 1 & 2	30	30.0	-	1.298	23
	30	30.0	-	0.719	42
	21	21.0		3.793	6
Humboldt Bay Unit 3	12	12.75	80	0.687	19
	10	10.75	80	0.593	18
	6	6.625	80	0.432	15

Table 3

Comparison of Browns Ferry and Selected Database Piping Parameters

Piping Parameter	Browns Ferry	Database Sites
Pipe Diameter (inch)	1.315 – 24.0	1.05 – 30.0
Wall Thickness (inch)	0.25 – 1.218	0.113 – 3.793
Diameter-to-Thickness Ratio (D/t)	5 - 20	4 – 64

Table 4

Bounding Evaluations of Typical Support Configurations

Support Type	Critical Component	Stress Ratio
Cantilever bracket	Anchor bolts	.73
Rod hanger	Overhead weld attachment	.70

						SHEET NO.	27
JOB NO.	200316	JOB	BFN MSIV TECH SPEC CHANGE	BY	7Bej	DATE	8-23-99
CALC. NO.	C-001	SUBJECT	SEISMIC VERIFICATION OF THE MSIV ALT PIPING AND SUPPORTS	CHK	JD	DATE	8/30/99

Figure 1
Comparison of Database Site Spectra
to Browns Ferry DBE Ground Spectra

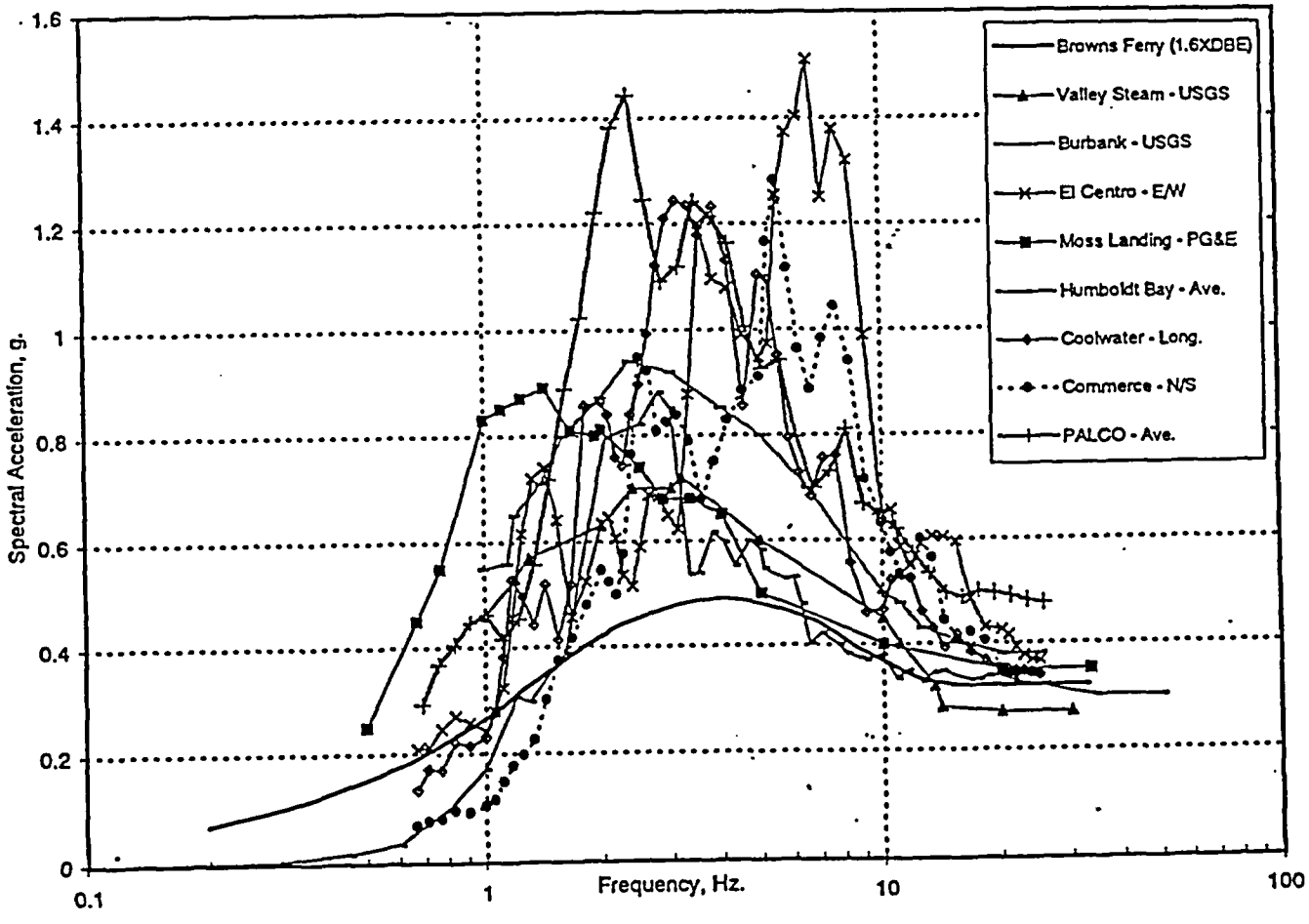

EQE INTERNATIONAL

JOB NO.	200916	JOB	BFN MSIV TECH SPEC CHANGE	BY	FBeigi	DATE	8-23-99
CALC. NO.	C-001	SUBJECT	SEISMIC VERIFICATION OF THE MSIV ALT PIPING AND SUPPORTS	CHK		DATE	8/30/99

SHEET NO. 28

Figure 2
Comparison of Browns Ferry and
Selected Database Piping D/t Ratios

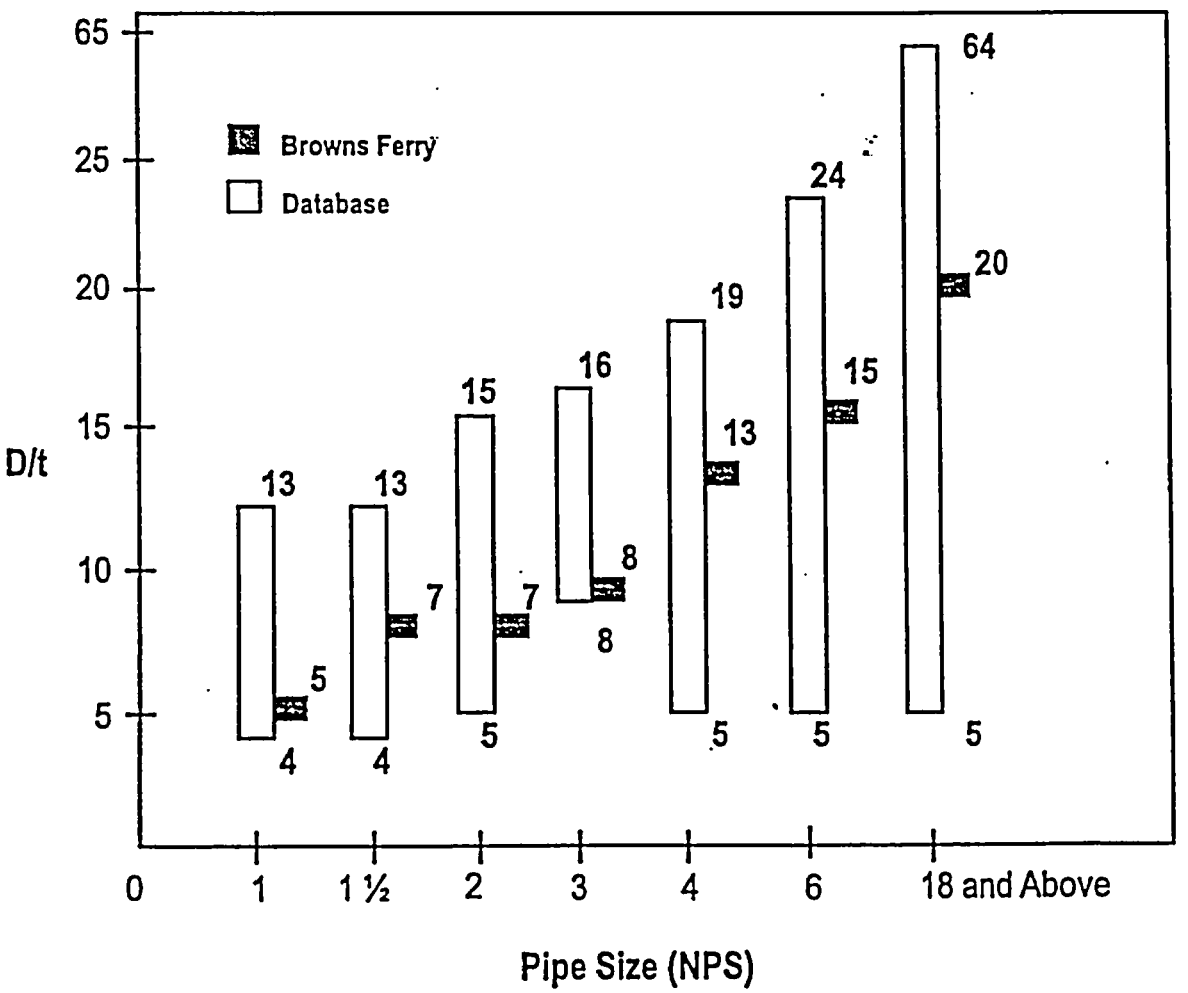

5.0 CONCLUSIONS

Based on the results of the seismic verification walkdowns and bounding support evaluations, and upon the resolution of the identified walkdown outliers, it is reasonable to assume that the ALT piping, related supports and components have adequate seismic capacity in the event of a Design Basis Earthquake (DBE) at Browns Ferry.

CALCULATION SHEET

Document: CDN0 001 99 0113	Rev.002	Plant: BFN	Unit(s): 0
Subject: SEISMIC EVALUATION REPORT		Prepared : J.O. Dizon Date: 6/02/04 Checked : S.J. Eder Date: 6/02/04	

ATTACHMENT D

MSIV SEISMIC EVALUATION REPORT
APPLICATION TO BFN UNIT 1
MSIV SEISMIC RUGGEDNESS VERIFICATION PROGRAM

	PREPARER SIGNATURE	DATE	CHECKER SIGNATURE	DATE
		6/02/04		6/02/04
	John O. Dizon (Facility Risk Consultants, Inc.)		Stephen J. Eder (Facility Risk Consultants, Inc.)	

CALCULATION SHEET

Document: CDN0 001 99 0113	Rev.002	Plant: BFN	Unit(s): 0
Subject: SEISMIC EVALUATION REPORT		Prepared : J.O. Dizon Date: 6/02/04 Checked : S.J. Eder Date: 6/02/04	

D.1 PURPOSE

The purpose of this Attachment is to map the applicable sections of Attachments A, B and C of this calculation for use in the BFN Unit 1 Increased MSIV Leakage Tech Spec Change Submittal.

D.2 APPLICATION TO BFN UNIT 1

The following table presents a map purpose

Attachment	Section	Direct Application	Equivalent Section in Reference D-1	Additional References
A	1	Yes	---	N/A
	2.1	Yes	---	N/A
	2.2	Yes	---	N/A
	3.1	Yes	---	N/A
	3.2	No	2.1	---
	3.3	No	4.1 to 4.16	---
	4.1	No	5.1 to 5.2	---
	4.2	Yes	---	N/A
	4.3	Yes	---	N/A
	4.4	Yes *	---	Ref. D-2 of Attachment D
	5	Yes *	---	References in Attachment D
B	1	Yes	---	N/A
	2	Yes	---	N/A
	3	Yes *	---	References in Attachment D
	4	Yes *	---	Ref. D-2 of Attachment D
	5	Yes	---	N/A
C	1	Yes	---	N/A
	2	Yes	---	N/A
	3	Yes *	---	Ref. D-1 of Attachment D
	4	Yes *	---	Ref. D-1 of Attachment D
	5	Yes	---	N/A

* Supplemented by the additional reference(s) listed.

D.3 REFERENCES

D-1 Facility Risk Consultants, Inc., Report No. TVA/BFN-01-R-003, "*MSIV Seismic Ruggedness Verification at Browns Ferry Nuclear Plant Unit 1*", Revision 0, May 13, 2004. **RIMS No. W87040520002.**

D-2 TVA Calculation No. **CDN1-000-2004-0041**, "Seismic Verification of Condenser and its Anchorage, MSIV Ruggedness Seismic Analysis – Resolution of POS 15-1", Revision 000.