ENCLOSURE 14

TENNESSEE VALLEY AUTHORITY
BROWNS FERRY NUCLEAR PLANT (BFN)
UNITS 2 AND 3

PROPOSED TECHNICAL SPECIFICATIONS (TS) CHANGE TS - 418 - REQUEST FOR LICENSE AMENDMENT FOR EXTENDED POWER UPRATE OPERATION

NON-PROPRIETARY NEDO-33047 BROWNS FERRY UNITS 2 AND 3 SAFETY ANALYSIS REPORT FOR EXTENDED POWER UPRATE

See Attached:

GE Nuclear Energy

NED0-33047
DRF 0000-0011-1328
Class I
June 2004

Browns Ferry Units 2 and 3 Safety Analysis Report for Extended Power Uprate

R. L. Hayes

GE Nuclear Energy

175 Curtner Ave., San Jose, CA 95125

NEDO-33047
Revision 0
Class I
DRF 0000-0011-1328
June 2004

BROWNS FERRY UNITS 2 AND 3 SAFETY ANALYSIS REPORT FOR EXTENDED POWER UPRATE

Prepared by: R. L. Hayes

Approved by: _____
L. W. King, Project Manager
GE Nuclear Energy

Approved by: _____
T. C. Tuck, EPU Engineering Manager
Tennessee Valley Authority

IMPORTANT NOTICE REGARDING CONTENTS OF THIS REPORT

Please Read Carefully

The only undertakings of the General Electric Company (GE) respecting information in this document are contained in the contract between TVA and GE, Contract Order No. P-92NNP-82058D-001, effective 14 May 2001, and nothing contained in this document shall be construed as changing the contract. The use of this information by anyone other than TVA, or for any purpose other than that for which it is intended, is not authorized; and, with respect to any unauthorized use, GE makes no representation or warranty, express or implied, and assumes no liability as to the completeness, accuracy, or usefulness of the information contained in this document, or that its use may not infringe privately owned rights.

Table Of Contents

Tables

Figures

EXECUTIVE SUMMARY

This report summarizes the results of all significant safety evaluations performed that justify uprating the licensed thermal power at Browns Ferry Units 2 and 3 (hereafter, Browns Ferry unless explicitly noted). The requested license power level is an increase to 3952 MWt from the current licensed reactor thermal power of 3458 MWt.

This report follows the NRC approved generic format and content for BWR EPU licensing reports, documented in NEDC-32424P-A, "Generic Guidelines For General Electric Boiling Water Reactor Extended Power Uprate," (Reference1) commonly called "ELTR1." Per ELTR1, every safety issue that should be addressed in a plant-specific EPU licensing report is addressed in this report. For issues that have been evaluated generically, this report usually only references the (NRC approved) generic evaluations in either ELTR1 or NEDC-32523P-A, "Generic Evaluations of General Electric Boiling Water Reactor Extended Power Uprate," (Reference 2) which is commonly called "ELTR2."

It is not the intent of this report to address all the details of the analyses and evaluations reported herein. For example, only previously NRC-approved or industry-accepted methods were used for the analyses of accidents and transients, as documented in ELTR1. Therefore, the safety analysis methods have been previously addressed, and thus, are not addressed in this report. Also, event and analysis descriptions that are already provided in other licensing reports or the UFSAR are not repeated within this report. This report summarizes the results of the significant operational and safety evaluations needed to justify a licensing amendment to allow for EPU operation.

Uprating the power level of nuclear power plants can be done safely within plant-specific limits and is a cost-effective way to increase installed electrical generating capacity. Many light water reactors have already been uprated worldwide.

An increase in electrical output of a BWR plant is accomplished primarily by generation and supply of higher steam flow for the turbine generator. Browns Ferry, as originally licensed, has an as-designed equipment and system capability to accommodate steam flow rates at least 5% above the current rating. Also, Browns Ferry has sufficient design margins to allow the units to be safely uprated up to 120% of its OLTP.

A higher steam flow is achieved by increasing the reactor power along slightly modified rod and core flow control lines. A limited number of operating parameters are changed, some setpoints are adjusted and instruments are recalibrated. Plant procedures are revised, and tests similar to some of the original startup tests are performed.

Detailed evaluations of the reactor, engineered safety features, power conversion, emergency power, support systems, environmental issues, design basis accidents, and previous licensing evaluations were performed. This report demonstrates that Browns Ferry can safely operate at the requested license power level of 3952 MWt. However, non-safety power generation modifications must be implemented in order to obtain the electrical power output associated with 100% of the EPU RTP level. Until these modifications are completed, the non-safety balance of plant may limit the electrical power output, which in-turn may limit the operating thermal power level to less than the licensed EPU RTP level. These modifications have been evaluated and they do not constitute a material alteration to the plant, as discussed in 10 CFR 50.92.

The evaluations and reviews were conducted in accordance with the criteria in Appendix B of ELTR1. The results of the following evaluations and reviews, presented in this report, were found to be acceptable:

- All safety aspects that are affected by the increase in thermal power and operating pressure were evaluated;
- Evaluations were performed using NRC-approved or industry-accepted analysis methods;
- No change, requiring compliance with a more recent industry code and/or standard, is being requested;
- The UFSAR will be updated for the EPU related changes, after EPU is implemented, per the requirements in 10 CFR 50.71(e);
- Modifications will be implemented under 10 CFR 50.59;
- Systems and components affected by EPU were reviewed to ensure there is no significant challenge to any safety system;
- Compliance with current plant environmental regulations were reviewed;
- Potentially affected commitments to the NRC have been reviewed;
- Planned changes not yet implemented have also been reviewed for the effects of EPU;
- All EPU-related Technical Specification changes are identified and justified; and

The Browns Ferry licensing requirements have been reviewed, and it is concluded that this EPU can be accommodated (1) without a significant increase in the probability or consequences of an accident previously evaluated, (2) without creating the possibility of a new or different kind of accident from any accident previously evaluated, and (3) without exceeding any existing regulatory limits applicable to the plant, which might cause a significant reduction in a margin of safety.

1. INTRODUCTION

1.1 REPORT APPROACH

Uprating the power level of nuclear power plants can be done safely within certain plant-specific limits. Most GE BWR plants have the capability and margins for an uprating of 5 to 20% without major NSSS hardware modifications. Many light water reactors have already been uprated worldwide. Over a thousand MWe have already been added by uprate in the United States. Several BWR plants are among those that have already been uprated. The following evaluation supports an EPU to 3952 MWt, which corresponds to 120% of the OLTP. The OLTP level is 3293 MWt.

This report follows the NRC approved generic format and content for EPU licensing reports, as described in Section 3.0 and Appendices A & B of ELTR1, and the NRC staff position letter reprinted in ELTR1. The analytical methodologies used for ECCS-LOCA evaluations, containment evaluations, transient evaluations, and piping evaluations are documented in ELTR1, Section 1 and Appendices D, E, G, and K. The limitations on use of these methods as defined in the NRC staff position letter reprinted in ELTR1 were followed for this EPU analysis.

Many of the component, system and performance evaluations contained within this report have been generically evaluated in ELTR2, and found to be acceptable. The ELTR2 generic evaluations are based on (1) a 20% thermal power increase, (2) an increased operating dome pressure to 1095 psia, (3) a reactor coolant temperature increase to 556°F, and (4) steam and FW increases of about 24%. The plant conditions assumed in the ELTR2 evaluations bound the conditions for this EPU.

A glossary of terms is provided in Table 1-1.

1.2 PURPOSE AND APPROACH

An increase in electrical output of a BWR is accomplished primarily by generation and supply of higher steam flow to the turbine generator. Most BWRs, as originally licensed, have an as-designed equipment and system capability to accommodate steam flow rates at least 5% above the original rating. In addition, continuing improvements in the analytical techniques (computer codes) based on several decades of BWR safety technology, plant performance feedback, operating experience, and improved fuel and core designs have resulted in a significant increase in the design and operating margin between the calculated safety analyses results and the current plant licensing limits. The available margins in calculated results, combined with the as-designed excess equipment, system, and component capabilities (1) have allowed many BWRs to increase their thermal power ratings by 5% without any NSSS hardware modification, and (2) provide for power increases up to 20% with some non-safety hardware modifications. These power increases involve no significant increase in the hazards presented by the plants as approved by the NRC at the original license stage.

The method for achieving higher power is to use the MELLLA power/flow map, and increase core flow along the MELLLA flow control lines. However, there is no increase in the maximum allowable recirculation flow value.

1.2.1 Uprate Analysis Basis

Units 2 and 3 are currently licensed at 3458 MWt, and most of the current safety analyses are based on this value. The EPU RTP level included in this evaluation is 120% of the OLTP. Plant specific EPU parameters are listed in Table 1-2. The EPU safety analyses are based on a power level of 1.02 times the EPU power level unless the Regulatory Guide 1.49 two percent power factor is already accounted for in the analysis methods consistent with the methodology described in Reference 3.

1.2.2 Computer Codes

NRC-approved or industry-accepted computer codes and calculational techniques are used to demonstrate compliance with the applicable regulatory acceptance criteria. The application of these codes to the EPU analyses complies with the limitations, restrictions, and conditions specified in the approving NRC SER where applicable for each code. Any exceptions to the use of the code or conditions of the applicable SER are noted in Table 1-3.

1.2.3 Approach

The planned approach to achieving the EPU RTP level consists of: (1) an increase in the core thermal power with a more uniform (flattened) power distribution to create increased steam flow, (2) a corresponding increase in the FW system flow, (3) no increase in maximum allowable core flow, and (4) reactor operation primarily along an extension of the MELLLA rod/flow control lines. This approach is based on, and is consistent with, the NRC-approved BWR generic EPU guidelines that are presented in BLTR1. The plant-unique evaluations are based on a review of plant design and operating data, as applicable, to confirm excess design capabilities, and, if necessary, identify any items which may require modifications associated with the EPU. For some items, bounding analyses and evaluations in BLTR2 demonstrate plant operability and safety. The generic analyses and evaluations in BLTR2 are based on a 20% of original licensed power increase. For the Browns Ferry EPU, the conclusions of system/component acceptability stated in BLTR2 are bounding. The scope and depth of the evaluation results provided herein are established based on the generic BWR EPU guidelines and unique features of the plant. The results of the following evaluations, presented in this report, were found to be acceptable:

(a) **Reactor Core and Fuel Performance:** Specific analyses required for EPU have been performed for a representative fuel cycle with the reactor core operating at EPU conditions. Specific core and fuel performance is evaluated for each operating cycle, and will continue to be evaluated and documented for the operating cycles that implement EPU.

(b) **RCS and Connected Systems:** Evaluations of the NSSS components and systems have been performed at EPU conditions. These evaluations confirm the acceptability of the effects of the higher power and the associated change in process variables (i.e., increased pressure, temperature, and steam and FW flows). Safety-related equipment performance is the primary focus in this report, but key aspects of reactor operational capability are also included.

(c) **Engineered Safety Feature Systems:** The effects of EPU power operation on the Containment, ECCS, Standby Gas Treatment system and other ESFs have been evaluated for key events. The evaluations include the containment responses during limiting AOOs, special events, ECCS-LOCA, and MSRV containment dynamic loads.

(d) **Control and Instrumentation:** The control and instrumentation signal ranges and analytical limits for setpoints have been evaluated to establish the effects of the changes in various process parameters such as power, pressure, neutron flux, steam flow and FW flow. As required, setpoint evaluations have been performed to determine the need for any TS allowable value changes for various functions (e.g., main steam line high flow isolation setpoints).

(e) **Electrical Power and Auxiliary Systems:** Evaluations have been performed to establish the operational capability of the plant electrical power and distribution systems and auxiliary systems to ensure that they are capable of supporting safe plant operation at the EPU RTP power level.

(f) **Power Conversion Systems:** Evaluations have been performed to establish the operational capability of various non-safety BOP systems and components to ensure that they are capable of delivering the increased power output, and/or the modifications necessary to obtain full EPU power.

(g) **Radwaste Systems and Radiation Sources:** The liquid and gaseous waste management systems have been evaluated at limiting conditions for EPU to show that applicable release limits continue to be met during operation at higher power. The radiological consequences have been evaluated for EPU to show that applicable regulations have been met for the EPU power conditions. This evaluation includes the effect of higher power level on source terms, on-site doses and off-site doses, during normal operation.

(h) **Reactor Safety Performance Evaluations:** The limiting UFSAR analyses for design basis events are performed as part of the EPU evaluation. ELTR1 identifies the limiting analyses that require reanalysis for EPU. The EPU results in no new limiting event beyond those identified in ELTR1. All limiting accidents and transients are analyzed based upon limiting conditions for the EPU and show continued compliance with regulatory requirements.

(i) **Additional Aspects of EPU:** HELB and EQ evaluations are performed at bounding conditions for the EPU to show the continued operability of plant equipment under the EPU conditions. The effects of the EPU on the plant IPE are analyzed to demonstrate that there are no new vulnerabilities to severe accidents.

(j) **Licensing Evaluations:** The applicable plant licensing commitments, IE Bulletins, Circulars, Notices, etc. are evaluated for the effects of the EPU. [[

]] Items unique to the plant are shown to be acceptable for EPU operation.

1.3 UPRATED PLANT OPERATING CONDITIONS

The following evaluations justify increasing the licensed thermal power to 120% of the OLTP value. This new RTP value provides an increase of steam flow to approximately 123% of the original value, and a corresponding increase in electrical power output. To accomplish this performance increase, the rated thermal power is increased to 3952 MWt. The following descriptions provide information on the original and the EPU plant operating conditions.

1.3.1 Reactor Heat Balance

The operating pressure, the total core flow, and the coolant thermodynamic state characterize the thermal hydraulic performance of a BWR reactor core. The EPU values of these parameters are used to establish the steady state operating conditions and as initial and boundary conditions for the required safety analyses. The EPU values for these parameters are determined by performing heat (energy) balance calculations for the reactor system at EPU conditions.

The reactor heat balance relates the thermal-hydraulic parameters to the plant steam and FW flow conditions for the selected core thermal power level and operating pressure. Operational parameters from actual plant operation are considered (e.g., steam line pressure drop) when determining the expected EPU conditions. The thermal-hydraulic parameters define the conditions for evaluating the operation of the plant at EPU conditions. The thermal-hydraulic parameters obtained for the EPU conditions also define the steady state operating conditions for equipment evaluations. Heat balances at appropriately selected conditions define the initial and boundary conditions for plant safety analyses.

Figure 1-1 shows the EPU heat balance at 100% of EPU and 100% rated core flow. Figure 1-2 shows the EPU heat balance at 102% of EPU and 100% core flow.

Table 1-2 provides a summary of the reactor thermal-hydraulic parameters for the current rated and EPU conditions. At EPU conditions, the maximum nominal operating reactor vessel dome pressure is maintained at the current value, which minimizes the need for plant and licensing changes. With the increased steam flow and associated non-safety BOP modifications, the current dome pressure provides sufficient operating turbine inlet pressure to assure good pressure control characteristics.

1.3.2 Reactor Performance Improvement Features

The UFSAR, core fuel reload evaluations, and the Technical Specifications currently include allowances for plant operation with the performance improvement features and the equipment OOS listed in Table 1-2. When limiting, the input parameters related to the performance improvement features or the equipment OOS have been included in the safety analyses for EPU. The use of these performance improvement features and allowing for equipment OOS is continued during EPU operation. The evaluations that are dependent upon cycle length are performed for EPU assuming a 24-month cycle.

1.4 SUMMARY AND CONCLUSIONS

This evaluation encompasses an EPU to 120% of OLTP. The strategy for achieving higher power is to extend the MELLLA power/flow map region along the upper boundary extension.

The Browns Ferry licensing requirements have been reviewed to demonstrate that this uprate can be accommodated without a significant increase in the probability or consequences of an accident previously evaluated, without creating the possibility of a new or different kind of accident from any accident previously evaluated, and without exceeding any existing regulatory limits or design allowable limits applicable to the plant which might cause a reduction in a margin of safety.

1.5 REFERENCES

1. GE Nuclear Energy, "Generic Guidelines for General Electric Boiling Water Reactor EPU," (ELTR1), Licensing Topical Reports NEDC-32424P-A, Class III (Proprietary), February 1999; and NEDO-32424, Class I (Non-proprietary), April 1995.
2. GE Nuclear Energy, "Generic Evaluations of General Electric Boiling Water Reactor EPU," (ELTR2), Licensing Topical Reports NEDC-32523P-A, Class III (Proprietary), February 2000; NEDC-32523P-A, Supplement 1 Volume I, February 1999; and Supplement 1 Volume II, April 1999.
3. GE Nuclear Energy, "General Electric Standard Application for Reactor Fuel, GESTAR-II," NEDE-24011-P-A-14, April 2000.

Table 1-1

Glossary of Terms

Term	Definition
AC	Alternating current
ADS	Automatic Depressurization System
ADHR	Auxiliary Decay Heat Removal
AL	Analytical Limit
ALARA	As Low as Reasonably Achievable
ANS	American Nuclear Society
ANSI	American National Standards Institute
AOO	Anticipated operational occurrences (moderate frequency transient events)
AOP	Abnormal Operating Procedure
AOV	Air Operated Valve
APLHGR	Average Planar Linear Heat Generation Rate
APRM	Average Power Range Monitor
ARI	Alternate Rod Insertion
ARTS	APRM/RBM/Technical Specifications
ASME	American Society of Mechanical Engineers
AST	Alternate Source Term
ATWS	Anticipated Transient Without Scram
AV	Allowable Value
BHP	Brake horse power
BIIT	Boron injection initiation temperature
BOP	Balance-of-plant
BPWS	Banked Position Withdrawal Sequence
BTU	British Thermal Unit
BWR	Boiling Water Reactor
BWROG	BWR Owners Group
BWRVIP	BWR Vessel and Internals Project
CAD	Containment Atmosphere Dilution
CBDT	Cause-based decision tree
CDF	Core damage frequency
CFD	Condensate filter demineralizer
CFR	Code of Federal Regulations

Term	Definition
CLTP	Current Licensed Thermal Power
CO	Condensation oscillation
COLR	Core Operating Limits Report
CPR	Critical Power Ratio
CRD	Control Rod Drive
CRDA	Control Rod Drop Accident
CREVS	Control Room Emergency Ventilation System
CRHZ	Control Room Habitability Zone
CSC	Containment Spray Cooling
CS	Core Spray
CSS	Core support structure
CST	Condensate Storage Tank
CUF	Cumulative usage factor
DBA	Design basis accident
DC	Direct current
DHR	Decay heat removal
DLO	Dual (recirculation) loop operation
ECCS	Emergency Core Cooling System
EECW	Emergency Equipment Cooling Water
EFPY	Effective full power years
EHC	Electro-hydraulic control
ELTR	Extended (Power Uprate) Licensing Topical Report
ELTR1	Generic Guidelines for General Electric Boiling Water Reactor EPU
ELTR2	Generic Evaluations of General Electric Boiling Water Reactor EPU
EOC	End of cycle
EOP	Emergency Operating Procedure
EPRI	Electric Power Research Institute
EPU	Extended Power Uprate
ESF	Engineered Safety Feature
EQ	Environmental qualification
FAC	Flow Accelerated Corrosion
FFWTR	Final Feedwater Temperature Reduction
FHA	Fuel Handling Accident
FIV	Flow induced vibration
FLIM	Failure likelihood index methodology

Term	Definition
FPCC	Fuel Pool Cooling and Cleanup
FW	Feedwater
FWHOOS	Feedwater heater out of service
GC	Generic Communication
GDC	General Design Criteria
GE	General Electric Company
GENE	General Electric Nuclear Energy
GL	Generic Letter
HCR	Human cognitive reliability
HELB	High Energy Line Break
HEP	Human error probability
HEPA	High Efficiency Particulate Air
Hg_a	Inches of mercury absolute
HPCI	High Pressure Coolant Injection
HPT	High-pressure turbine
HRA	Human Reliability Assessment
HVAC	Heating Ventilating and Air Conditioning
HWC	Hydrogen Water Chemistry
HWWV	Hardened Wetwell Vent
HX	Heat exchanger
IASCC	Irradiation-assisted stress corrosion cracking
ICF	Increased Core Flow
ICS	Integrated computer system
IE	Inspection and Enforcement
IEB	Inspection and Enforcement Bulletin
IEEE	Institute of Electrical and Electronics Engineers
IGSCC	Intergranular stress corrosion cracking
ILBA	Instrument Line Break Accident
IORV	Inadvertent Opening of a Relief Valve
IPE	Individual Plant Evaluation
IRM	Intermediate Range Monitor
ISP	Integrated surveillance program
LCO	Limiting Conditions for Operation
LDS	Leak Detection System
LERF	Large early release frequency

Term	Definition
LHGR	Linear Heat Generation Rate
LOCA	Loss-Of-Coolant Accident
LOFW	Loss-of-feedwater
LOOP	Loss of Offsite Power
LPCI	Low Pressure Coolant Injection
LPRM	Local Power Range Monitor
LPSP	Low Power Setpoint
LTTIP	Long Term Torus Integrity Program
MAAP	Modular Accident Analysis Program
MAPLHGR	Maximum Average Planar Linear Heat Generation Rate
MBTU	Millions of BTUs
MCPR	Minimum Critical Power Ratio
MELB	Moderate Energy Line Break
MELLLA	Maximum Extended Load Line Limit Analysis
MeV	Million Electron Volts
Mlb	Millions of pounds
MOV	Motor operated valve
MS	Main steam
MSIV	Main Steam Isolation Valve
MSIVC	Main Steam Isolation Valve Closure
MSIV-LCS	Main Steam Isolation Valve Leakage Control System
MSL	Main steam line
MSLB	Main Steamline Break
MSLBA	Main Steamline Break Accident
MSRV	Main steam relief valve
MSRVDL	Main steam relief valve discharge line
MSVV	Main steam valve vault
MVA	Mega Volt Amps
Mvar	Megavar
MWe	Megawatts-electric
MWt	Megawatt-thermal
NA	Not Applicable
NDE	Non-destructive examination
NPSH	Net positive suction head
NRC	Nuclear Regulatory Commission

Term	Definition
NSSS	Nuclear steam supply system
NTSP	Nominal Trip Setpoint
NUREG	Nuclear Regulations
OLMCPR	Operating Limit Minimum Critical Power Ratio
OLTP	Original Licensed Thermal Power
OOS	Out-of-service
OPRM	Oscillation Power Range Monitor
ORAM	Outage Risk Assessment Management
ΔP	Differential pressure - psi
P_{25}	25% of EPU Rated Thermal Power
PCS	Pressure Control System
PCT	Peak cladding temperature
PRA	Probabilistic Risk Assessment
PRFO	Pressure Regulator Failure-Open
PRNMS	Power Range Neutron Monitoring System
PSA	Probabilistic Safety Analysis
PSF	Performance-shaping factor
psi	Pounds per square inch
psia	Pounds per square inch - absolute
psid	Pounds per square inch - differential
psig	Pounds per square inch - gauge
P-T	Pressure-temperature
RBCCW	Reactor Building Closed Cooling Water
RBM	Rod Block Monitor
RCIC	Reactor Core Isolation Cooling
RCPB	Reactor Coolant Pressure Boundary
RCS	Reactor Coolant System
RCW	Raw Cooling Water
RHR	Residual Heat Removal
RHRSW	Residual Heat Removal Service Water
RIPD	Reactor internal pressure difference(s)
RPS	Reactor Protection System
RPT	Recirculation Pump Trip
RPV	Reactor Pressure Vessel
RRS	Reactor Recirculation System

Term	Definition
RSLB	Recirculation system line break
RTP	Rated Thermal Power
RT_{NDT}	Reference temperature of nil-ductility transition
RWCU	Reactor Water Cleanup
RWB	Rod Withdrawal Error
RWM	Rod Worth Minimizer
S_{alt}	EPU alternating stress intensity
S_m	Code allowable stress limit
SAR	Safety Analysis Report
SBO	Station blackout
SDC	Shutdown Cooling
SER	Safety Evaluation Report
SFP	Spent fuel pool
SGTS	Standby Gas Treatment System
SJAE	Steam Jet Air Ejector
SHB	Shroud head bolts
SIL	Service Information Letter
SLCS	Standby Liquid Control System
SLMCPR	Safety Limit Minimum Critical Power Ratio
SLO	Single-loop operation
SOV	Solenoid Operated Valve
SP	Setpoint
SPC	Suppression Pool Cooling
SPDS	Safety Parameter Display System
SR	Surveillance Requirement
SRM	Source Range Monitor
SRP	Standard Review Plan
SRSS	Square Root of the Sum of the Squares
SRV	Safety relief valve
SSC	Structure, system, component
SSDS	Safe Shutdown System
SSP	Supplemental surveillance capsule program
TAF	Top of active fuel
TB	Turbine bypass
T/G	Turbine Generator

Term	Definition
TBV	Turbine Bypass Valve
TFSP	Turbine first stage pressure
TCV	Turbine Control Valve
T/G	Turbine/generator
TLD	Thermoluminescent dosimeter
TRM	Technical Requirements Manual
TS	Technical Specification(s)
TSV	Turbine Stop Valve
TVA	Tennessee Valley Authority
T_w	Time available
UFSAR	Updated Final Safety Analysis Report
UHS	Ultimate heat sink
USE	Upper shelf energy
VFD	Variable Frequency Drive

Table 1-2

Browns Ferry Current and EPU Plant Operating Conditions

Parameter	Current* Licensed Value	EPU Value
Thermal Power (MWt)	3458	3952
Vessel Steam Flow (Mlb/hr)**	14.153	16.440
Full Power Core Flow Range		
Mlb/hr	83.0 to 107.6	101.5 to 107.6
% Rated	81 to 105	99 to 105
Maximum Nominal Dome Pressure (psia)	1050	No Change
Maximum Nominal Dome Temperature (°F)	550.5	No Change
Pressure at upstream side of TSV (psia)	985	962
Full Power FW		
Flow (Mlb/hr)	14.103	16.390
Temperature (°F)	381.7	394.5
Core Inlet Enthalpy (Btu/lb) ***	524.7	523.2

* Based on current reactor heat balance.

** At normal FW heating.

*** At 100% core flow condition.

Currently licensed performance improvement features and/or equipment OOS that are included in EPU evaluations:

(1) ARTS-MELLLA with FRNMS
(2) EOC Coastdown (GESTAR Generic Analysis)
(3) SLO
(4) FFWTR
(5) FWHOOS
(6) One MSRV OOS
(7) 3% MSRV Setpoint tolerance
(8) ICF
(9) EOCRPT OOS
(10) TBOOS
(11) 24-month fuel cycle
(12) Reactor Level 3 Reduction

Table 1-3

Computer Codes Used For EPU Analyses

Task	Computer Code[a]	Version or Revision	NRC Approved	Comments
Reactor Heat Balance	ISCOR	09	Y(1)	NEDE-24011P Rev. 0 SER
Reactor Core and Fuel Performance	TGBLA	04	Y	NEDE-30130-P-A
	PANACEA	10	Y	NEDE-30130-P-A
	ISCOR	09	Y(1)	NEDE-24011P Rev. 0 SER
RPV Fluence	DORTG01V	01	N	(2)
	TGBLA	06	Y	(3)
RPV Internals Structural Integrity Evaluation	SAP4G07V	01	NA	NEDO-10909 (4)
Reactor Internal Pressure Differences	ISCOR	09	Y(1)	NEDE-24011P Rev. 0 SER
	LAMB	07	(5)	NEDE-20566-P-A
Transient Analysis	PANACEA	10	Y	NEDE-30130-P-A (6)
	ISCOR	09	Y(1)	NEDE-24011P Rev. 0 SER
	ODYN	10	Y	NEDO-24154-A
	SAFER	04	(7)	NEDC-32424P-A, NEDC-32523P-A, (8), (9), (10)
	TASC	03A	Y	NEDC-32084P-A, Rev. 2
ATWS	ODYN	10	Y	NEDE-24154P-A Supp. 1, Vol. 4
	STEMP	04	(11)	
	PANACEA	10	Y	NEDE-30130-P-A
	ISCOR	09	Y(1)	NEDE-24011P Rev. 0 SER
	TASC	03A	Y	NEDC-32084P (12)
Containment System Response	SHEX	05	Y	(13)
	M3CPT	05	Y	NEDO-10320, April 1971
	LAMB	08	(5)	NEDE-20566-P-A September 1986
Appendix R Fire Protection	GESTR	08	(7)	NEDE-23785-1-PA, Rev. 1
	SAFER	04	(7)	(8) (9) (10)
	SHEX	04	Y	(13)
RRS	BILBO	04V	NA	(4) NEDE-23504, February 1977 [RLH6]

Task	Computer Code[a]	Version or Revision	NRC Approved	Comments
ECCS-LOCA	LAMB	08	Y	NEDE-20566-P-A
	GESTR	08	Y	NEDE-23785-1-PA, Rev. 1, (8), (9), NEDC-23785P-A, Vol III, Supp 1, Rev. 1
	SAFER	04	Y	NEDE-23785-1-PA, Rev. 1, (8), (9), (10), NEDC-23785P-A, Vol III, Supp 1, Rev. 1
	ISCOR	09	Y(4)	NEDE-24011P Rev. 0 SER
	TASC	03A	Y	NEDC-32084P-A, Rev. 2
Fission Product Inventory	ORIGEN2	2.1	N	Isotope Generation and Depletion Code
MS Piping Analysis	TPIPE	16	Y	Structural Analysis Program
	ME 150	17	(14)	Structural Analysis Program
	HYTRAN	1.6	(14)	Hydraulic Transient Analysis
	RELAP 5	3.2	Y	Used for hydraulic modeling of two-phase flow.
HELB-OPC Mass and Energy Releases	RELAP 5	MOD 3.2	Y	HELB-OPC mass flow rate and enthalpy data.
HELB-OPC Sub-compartment Analysis	GOTHIC	6.1a	Y	HELB-OPC temperature, pressure and relative humidity profiles for reactor building areas.
Individual Plant Evaluation	RISKMAN	Windows 5.02	NA	RISKMAN is used as the Code for many IPE submittals to NRC
	MAAP	4.0.4, Rev 3	NA	MAAP is used for the thermal-hydraulic analysis for many IPE submittals to NRC.

Task	Computer Code[4]	Version or Revision	NRC Approved	Comments
BOP Performance	PEPSE	64A	(15)	Used to develop the turbine cycle heat balance.
	Multi-flow	1.10	(15)	Used for hydraulic modeling of the condensate and FW systems.
	RELAP5	MOD 3.2	Y	Used for hydraulic modeling of the heater drain system (two phase flow).
Condenser Evaluation	PEPSE	64A	(15)	Used to develop the turbine cycle heat balance.
Raw Water Cooling Evaluation	Multi-flow	1.10	(15)	Used for hydraulic modeling of the raw water cooling system.
Reactor Recirculation Vibration Monitoring	HYTRAN	1.6	(15)	Used to develop force time history files for pressure pulsation occurring during steady state operation of the reactor recirculation pumps and piping.
	TPIPE	16	Y	Used to evaluate steady state vibration of the recirculation and attached piping.
Condensate Pump, Condensate Booster Pump, and FW Pump modifications, and Steam Packing Exhauster Bypass Valve modifications.	TPIPE	16	Y	Used to evaluate piping stresses and to determine support loads for modifications made to the condensate piping
	Multi-flow	1.10	(15)	Used for hydraulic modeling of the condensate and FW systems
FW Heater Evaluations	SAP	2000	(15)	Used to evaluate stresses in the pass partition plates inside the FW heaters
Turbine Building HVAC Evaluation	WTRCOIL	1.1	(15)	Used to evaluate the performance of the cooling coils for increased temperatures due to EPU

- The application of these codes to the EPU analyses complies with the limitations, restrictions, and conditions specified in the approving NRC SER where applicable for each code. The application of the codes also complies with the SERs for the EPU programs.

1. The ISCOR code is not approved by name. However, the SER supporting approval of NEDE-24011P Rev. 0 by the May 12, 1978 letter from D. G. Eisenhut (NRC) to R. Gridley (GE) finds the models and methods acceptable, and mentions the use of a digital computer code. The referenced digital computer code is ISCOR. The use of ISCOR to provide core thermal-hydraulic information in reactor internal pressure differences, transient, ATWS, Stability, and LOCA applications is consistent with the approved models and methods.
2. CCC-543, "TORT-DORT Two- and Three-Dimensional Discrete Ordinates Transport Version 2.8.14," Radiation Shielding Information Center (RSIC), January 1994.
3. Letter, S.A. Richards (USNRC) to G. A. Watford (GE), "Amendment 26 to GE Licensing Topical Report NEDE-24011-P-A, GESTAR II – Implementing Improved GE Steady-State Methods (TAC No. MA6481)," November 10, 1999.
4. Not a safety analysis code that requires NRC approval. The code application is reviewed and approved by GENE for "Level-2" application and is part of GENE's standard design process. Also, the application of this code has been used in previous power uprate submittals.
5. The LAMB code is approved for use in ECCS-LOCA applications (NEDE-20566P-A and NEDO-20566A), but no approving SER exists for the use of LAMB in the evaluation of reactor internal pressure differences or containment system response. The use of LAMB for these applications is consistent with the model description of NEDE-20566P-A.
6. The physics code PANACEA provides inputs to the transient code ODYN. The improvements to PANACEA that were documented in NEDE-30130-P-A were incorporated into ODYN by way of Amendment 11 of GESTAR II (NEDE-24011-P-A). The use of PANAC Version 10 in this application was initiated following approval of Amendment 13 of GESTAR II by letter from G.C. Lainas (NRC) to J.S. Charnley (GE), MFN 028-086, Subject: "Acceptance for Referencing of Licensing Topical Report NEDE-24011-P-A Amendment 13, Rev. 6 General Electric Standard Application for Reactor Fuel," March 26, 1998.
7. The ECCS-LOCA codes are not explicitly approved for transient or Appendix R usage. The staff concluded that SAFER is qualified as a code for best estimate modeling of loss-of-coolant accidents and loss of inventory events via the approval letter and evaluation for NEDE-23785P, Revision 1, Volume II. (Letter, C.O. Thomas (NRC) to J.F. Quirk (GE), "Review of NEDE-23785-1 (P), "GESTR-LOCA and SAFER Models for the Evaluation of the Loss-of-Coolant Accident, Volumes I and II", August 29, 1983.) In addition, the use of SAFER in the analysis of long term Loss-of-Feedwater events is specified in the approved LTRs for power uprate: "Generic Guidelines for General Electric Boiling Water Reactor Extended Power Uprate," NEDC-32424P-A, February 1999 and "Generic Evaluations of General Electric Boiling Water Reactor Extended Power Uprate," NEDC-32523P-A, February 2000. The Appendix R events are similar to the loss of FW and small break LOCA events.

8. Letter, J.F. Klapproth (GE) to USNRC, Transmittal of GE Proprietary Report NEDC-32950P "Compilation of Improvements to GENE's SAFER ECCS-LOCA Evaluation Model," dated January 2000 by letter dated January 27, 2000.

9. Letter, S.A. Richards (NRC) to J.F. Klapproth, "General Electric Nuclear Energy (GENE) Topical Reports GENE (NEDC)-32950P and GENE (NEDC)-32084P Acceptability Review," May 24, 2000.

10. "SAFER Model for Evaluation of Loss-of-Coolant Accidents for Jet Pump and Non-Jet Pump Plants," NEDE-30996P-A, General Electric Company, October 1987.

11. The STEMP code uses fundamental mass and energy conservation laws to calculate the suppression pool heatup. The use of STEMP was noted in NEDE-24222, "Assessment of BWR Mitigation of ATWS, Volume I & II (NUREG-0460 Alternate No. 3) December 1, 1979." The code has been used in ATWS applications since that time. There is no formal NRC review and approval of STEMP or the ATWS topical report.

12. The NRC approved the TASC-03A code by letter from S. A. Richards, NRC, to J. F. Klapproth, GE Nuclear Energy, Subject: "Review of NEDC-32084P, TASC-03A, A Computer Code for Transient Analysis of a Single Fuel Channel," TAC NO. MB0564, March 13, 2002. The acceptance version has not yet been published.

13. The application of the methodology in the SHEX code to the containment response is approved by NRC in the letter to G. L. Sozzi (GE) from A. Thadani (NRC), "Use of the SHEX Computer Program and ANSI/ANS 5.1-1979 Decay Heat Source Term for Containment Long-Term Pressure and Temperature Analysis," July 13, 1993.

14. Code provides input to TPIPE. TPIPE has been used by TVA to support submittals to NRC.

15. Code used to determine nonsafety related parameters and information.

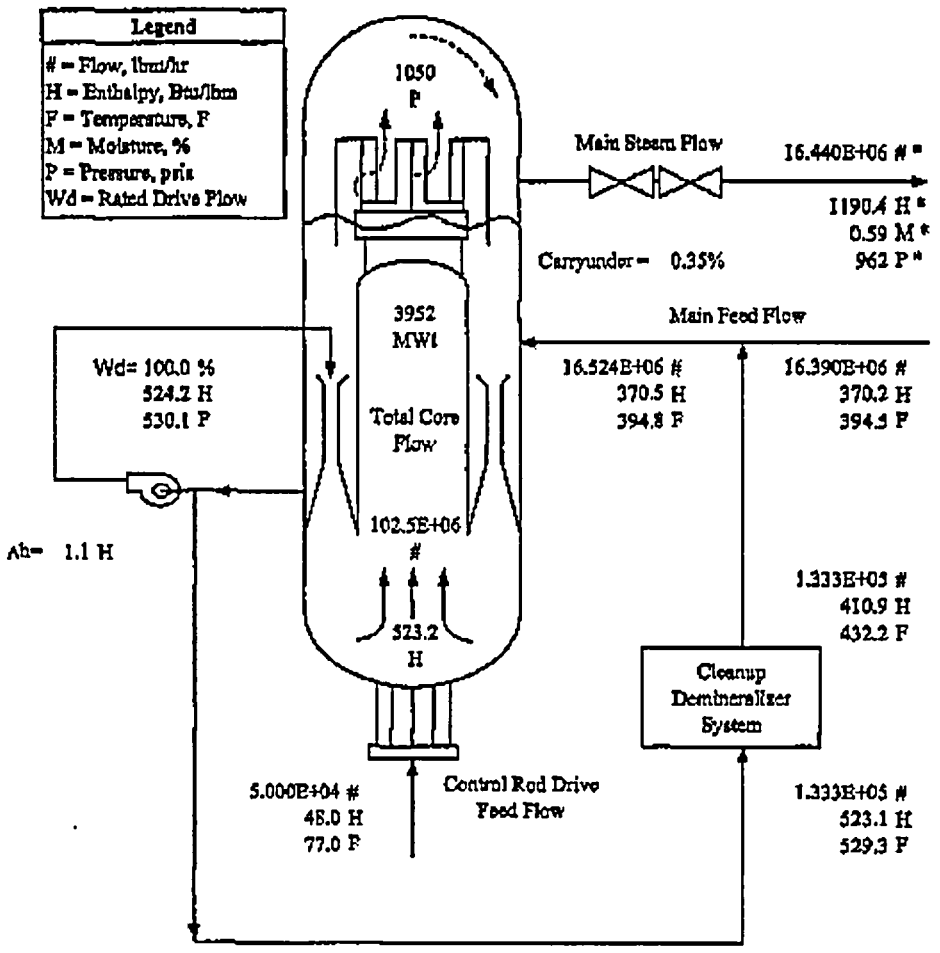

Core Thermal Power	3951.6
Pump Heating	10.6
Cleanup Losses	-4.4
Other System Losses	-1.1
Turbine Cycle Use	3956.7 MWt

Figure 1-1
Browns Ferry EPU Heat Balance – Nominal
(@ 100% Power and 100% Core Flow)

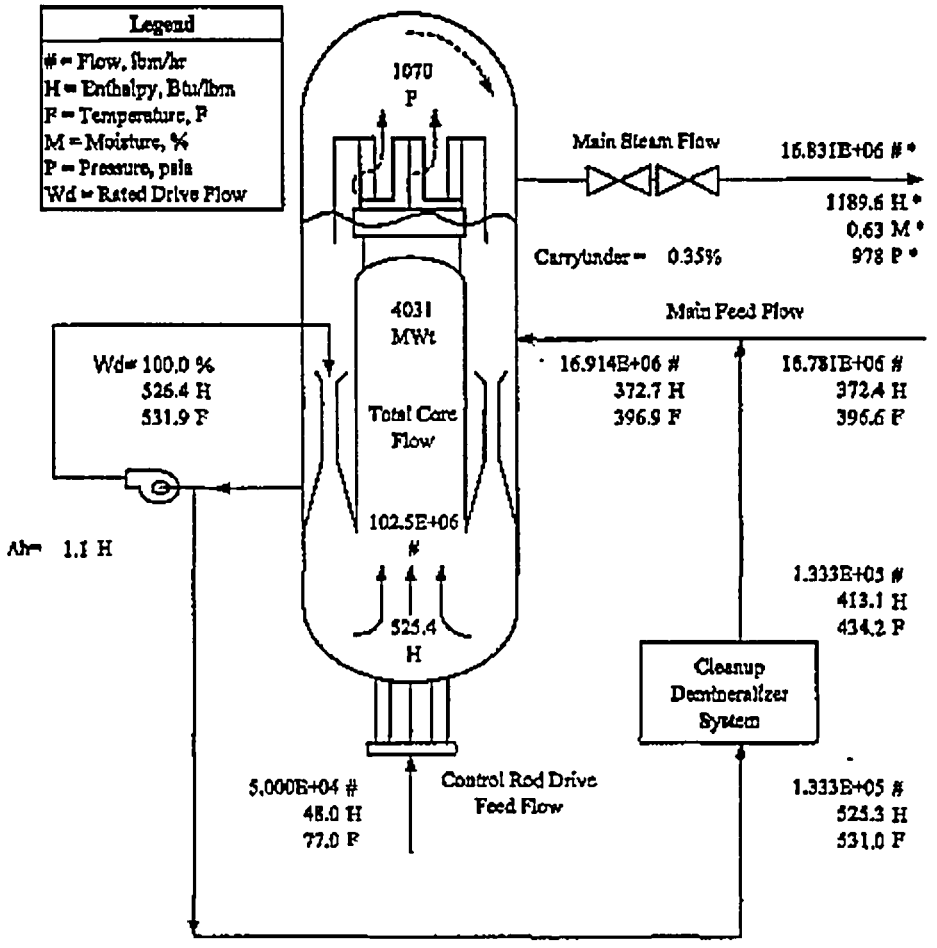

Core Thermal Power	4030.6
Pump Heating	10.6
Cleanup Losses	-4.4
Other System Losses	-1.1
Turbine Cycle Use	4035.7 MWt

Figure 1-2
Browns Ferry EPU Heat Balance - Overpressure Protection Analysis
(@ 102% Power and 100% Core Flow)

2. REACTOR CORE AND FUEL PERFORMANCE

2.1 FUEL DESIGN AND OPERATION

EPU increases the average power density proportional to the power increase. Browns Ferry is currently licensed with an average bundle power of 4.53 MW/bundle. The average bundle power for EPU is 5.17 MW/bundle. The EPU average bundle power is within the range of other operating BWRs.

The average power density has some effects on operating flexibility, reactivity characteristics and energy requirements. The additional energy requirements for EPU are met by an increase in bundle enrichment, an increase in the reload fuel batch size, and/or changes in fuel loading pattern to maintain the desired plant operating cycle length. The power distribution in the core is changed to achieve increased core power, while limiting the MCPR, LHGR, and MAPLHGR in any individual fuel bundle to be within its allowable value as defined in the COLR.

At the OLTP or the EPU RTP conditions, all fuel and core design limits continue to be met by planned deployment of fuel enrichment and burnable poison. This is supplemented by core management control rod pattern and/or core flow adjustments. [[
]] However, revised loading patterns, larger batch sizes and potentially new fuel designs may be used to provide additional operating flexibility and maintain fuel cycle length.

The EPU evaluations assume a reference equilibrium core of GE14 fuel. No new fuel product line designs are introduced for EPU, and EPU does not require a change to any fuel design limit. The fuel design limits are established for all new fuel product line designs as a part of the fuel introduction and reload analyses. [[
]]

The reactor core design power distribution usually represents the most limiting thermal operating state at design conditions. It includes allowances for the combined effects on the fuel heat flux and temperature of the gross and local power density distributions, control rod pattern, and reactor power level adjustments during plant operation. NRC approved core design methods were used to analyze core performance at the EPU RTP level. Detailed fuel cycle calculations of a representative core design for this plant demonstrate the feasibility of EPU RTP operation while maintaining fuel design limits. Thermal-hydraulic design and operating limits ensure an acceptably low probability of boiling transition-induced fuel cladding failure occurring in the core, even for the most severe postulated operational transients. As needed, limits are also placed on fuel APLHGR and/or fuel rod LHGRs in order to meet both peak cladding temperature limits for the limiting LOCA and fuel mechanical design bases.

The subsequent reload core designs for operation at the EPU RTP level will take into account the above limits, to ensure acceptable differences between the licensing limits and their corresponding operating values.

EPU may result in a small change in fuel burnup, the amount of fuel to be used, and isotopic concentrations of the radionuclides in the irradiated fuel relative to the original level of burnup. NRC-approved limits for burnup on the fuel designs are not exceeded. Also, due to the higher steady-state operating power associated with the EPU, the short-term curie content of the reactor fuel increases. The effects of higher power operation on radiation sources and design basis accident doses are discussed in Sections 8 and 9.2, respectively. EPU has some effects on operating flexibility, reactivity characteristics, and energy requirements. These issues are discussed in the following sections based on GE experience and fuel characteristics.

2.1.1 Fuel Thermal Margin Monitoring Threshold

The power level above which fuel thermal margin monitoring is required changes with EPU. The original plant operating licenses set this monitoring threshold at a typical value of 25% of RTP. [[

]]

The fuel thermal margin monitoring threshold is scaled down, if necessary, [[

]] Therefore, the Browns Ferry fuel thermal monitoring threshold is lowered to 23% [[ ]].

A change in the fuel thermal monitoring threshold also requires a corresponding change to the TS reactor core safety limit for reduced pressure or low core flow. The above discussion is consistent with the TS related discussion in Section 9.1.

2.2 THERMAL LIMITS ASSESSMENT

Operating limits ensure that regulatory and/or safety limits are not exceeded for a range of postulated events (e.g., transients, LOCA). This section addresses the effects of EPU on thermal limits. A reference equilibrium core of GE14 fuel is used for the EPU evaluation. Cycle-specific core configurations, evaluated for each reload, confirm EPU capability, and establish or confirm cycle-specific limits, as is currently the practice.

[[

]]

2.2.1 Safety Limit Minimum Critical Power Ratio

The SLMCPR can be affected slightly by EPU due to the flatter power distribution inherent in the increased power level. [[

]] The SLMCPR analysis reflects the actual plant core loading pattern and is performed for each plant reload core. [[

]]

2.2.2 Minimum Critical Power Ratio Operating Limit

The OLMCPR is determined on a cycle-specific basis from the results of the reload transient analysis, as described in Sections 5.3.2 and 5.7.2.1 of ELTR1 and Section 3.4 of ELTR2 (Reference 2). This approach does not change for EPU. The required OLMCPR is not expected to significantly change (< 0.03) as shown in Table 3-1 of ELTR1 and Figure 5-3 of ELTR2 and from experience with other uprated BWRs. For the reference core of GE14 fuel, the OLMCPR for EPU RTP operation is shown in Table 9-2.

[[ ]] The OLMCPR is calculated by adding the change in MCPR due to the limiting AOO event to the SLMCPR, and is determined on a cycle specific basis. EPU does not change the method used to determine this limit. The effect of EPU on AOO events is addressed in Section 9.1. [[

]]

2.2.3 MAPLHGR and Maximum LHGR Operating Limits

The MAPLHGR and maximum LHGR limits are maintained as described in Section 5.7.2.2 of ELTR1. No significant change in operation is anticipated due to the EPU based on experience from other BWR uprates. The ECCS performance is addressed in Section 4.3, and uses a reference equilibrium core of GE14 fuel for EPU. [[

]]

2.3 REACTIVITY CHARACTERISTICS

All minimum shutdown margin requirements apply to cold conditions, and are maintained without change.

Operation at higher power could reduce the hot excess reactivity during the cycle. This loss of reactivity does not affect safety, and is not expected to significantly affect the ability to manage the power distribution through the cycle to achieve the target power level. However, the lower hot excess reactivity can result in achieving an earlier all-rods-out condition. Through fuel cycle redesign, sufficient excess reactivity can be obtained to match the desired cycle length. Increasing hot reactivity may result in less hot-to-cold reactivity differences, and therefore, smaller cold shutdown margins. However, this potential loss in margin can be accommodated through core design, and current design and TS cold shutdown margin requirements are not affected. If needed, a bundle design with improved shutdown margin characteristics can be used to preserve the flexibility between hot and cold reactivity requirements for future cycles.

2.3.1 Power/Flow Operating Map

The EPU analyses and evaluations conservatively assume the current licensed MELLLA and ICF operating domains. The EPU power/flow operating map (Figure 2-1) includes the operating domain changes for EPU, and also shows the applicable Browns Ferry performance improvement features (e.g., MELLLA and ICF) addressed in Section 1.3.2. The changes to the power/flow operating map are [[

]] The maximum thermal operating power and maximum core flow shown on Figure 2-1 correspond to the EPU RTP and the previously analyzed core flow range when rescaled so that EPU RTP is equal to 100% rated. The power/flow operating map changes, incorporated into Figure 2-1, are consistent with the changes shown in Figure 5-1 of ELTR1.

The details of the reactor operating domain for EPU conditions are provided in Figure 2-1. The operating domain for EPU is defined by the following boundaries:

- the MELLLA upper load line, extended up to the EPU RTP level;
- the maximum EPU RTP corresponding to 120% of the OLTP; and
- the ICF line up to EPU RTP at 105% of rated core flow.

Consistent with ELTR1, these boundaries define an increase in the extent of the operating domain above the OLTP between the extended (relative to OLTP) MELLLA upper load line and ICF line.

Thermal hydraulic instability exclusion regions are not shown on Figure 2-1.

Analyses and evaluations have been performed to demonstrate that Browns Ferry may increase core flow to operate within the region of the operating map bounded by the constant speed line between 100P/105F and 52.5P/112.6F for EOC coastdown at constant maximum pump speed line.

EPU does not affect SLO because the maximum attainable thermal power during SLO is less than CLTP, and is limited by the available recirculation flow. SLO is bounded by the MELLLA domain in terms of absolute thermal power versus core flow. Therefore, a separate SLO power/flow operating map is not needed for EPU.

2.4 STABILITY

Browns Ferry has installed a PRNMS with OPRMs to implement the BWROG Long-Term Stability Solution Option III. Option III evaluations are core reload dependent and are performed for each reload fuel cycle.

Option III is a detect-and-suppress solution, which combines closely spaced LPRM detectors into "cells" to effectively detect reactor instability. Browns Ferry, having implemented Option III has demonstrated that the Option III trip setpoint is adequate to provide SLMCPR protection for anticipated reactor instability. This evaluation is dependent upon the core and fuel design

and is performed for each reload. Therefore, the effect of EPU will be analyzed for the first reload which incorporates the new rated power level.

The OPRM is designed to provide the Option III automatic scram. [[

]]

The Option III trip is armed only when plant operation is within the Option III trip-enabled region. The Option III trip-enabled region is defined as the region on the power/flow map with power ≥30% OLTP and core flow ≤60% rated core flow. The actual flow setpoint is determined by recirculation drive flow at Browns Ferry. For EPU, the Option III trip-enabled region is rescaled to maintain the same absolute power/flow region boundaries. Because the rated core flow is not changed, the 60% core flow boundary is not rescaled. The 30% OLTP boundary changes by the following equation:

EPU Region Boundary = 30% OLTP * (100% ÷ EPU (% OLTP))

Thus, for a 120% of OLTP EPU:

EPU Region boundary = 30% OLTP * (100% ÷ 120%) = 25% EPU

The OPRM setpoint will be evaluated for the uprated reload core prior to EPU implementation.

2.5 REACTIVITY CONTROL

2.5.1 Control Rod Drive System

The CRD system is used to control core reactivity by positioning neutron absorbing control rods within the reactor and to scram the reactor by rapidly inserting withdrawn control rods into the core. No change is made to the control rods due to the EPU. The effect on the nuclear characteristics of the fuel is discussed in Section 2.3.

For Browns Ferry, the scram times are decreased by the transient pressure response, [[.]] At normal operating conditions, the accumulator supplies the initial scram pressure and, as the scram continues, the reactor becomes the primary source of pressure to complete the scram. [[

.]]

2.5.2 Control Rod Drive Positioning and Cooling

[[.]]
and the automatic operation of the system flow control valve maintains the required drive water pressure and cooling water flow rate. Therefore, the CRD positioning and cooling functions are not

affected. The CRD cooling and normal CRD positioning functions are operational considerations, not safety-related functions, and are not affected by EPU operating conditions.

Plant operating data has confirmed that the CRD system flow control valve operating position has sufficient operating margin.

2.5.3 Control Rod Drive Integrity Assessment

The postulated abnormal operating condition for the CRD design assumes a failure of the CRD system pressure-regulating valve that applies the maximum pump discharge pressure to the CRD mechanism internal components. This postulated abnormal pressure bounds the ASME reactor overpressure limit. [[

]] Other mechanical loadings are addressed in Section 3.3.2 of this report.

2.6 REFERENCES

1. GE Nuclear Energy, "Generic Guidelines for General Electric Boiling Water Reactor Extended Power Uprate," (ELTR1), Licensing Topical Reports NEDC-32424P-A, Class III (Proprietary), February 1999; and NEDO-32424, Class I (Non-proprietary), April 1995.

2. GE Nuclear Energy, "Generic Evaluations of General Electric Boiling Water Reactor Extended Power Uprate," (ELTR2), Licensing Topical Reports NEDC-32523P-A, Class III (Proprietary), February 2000; NEDC-32523P-A, Supplement 1 Volume I, February 1999; and Supplement 1 Volume II, April 1999.

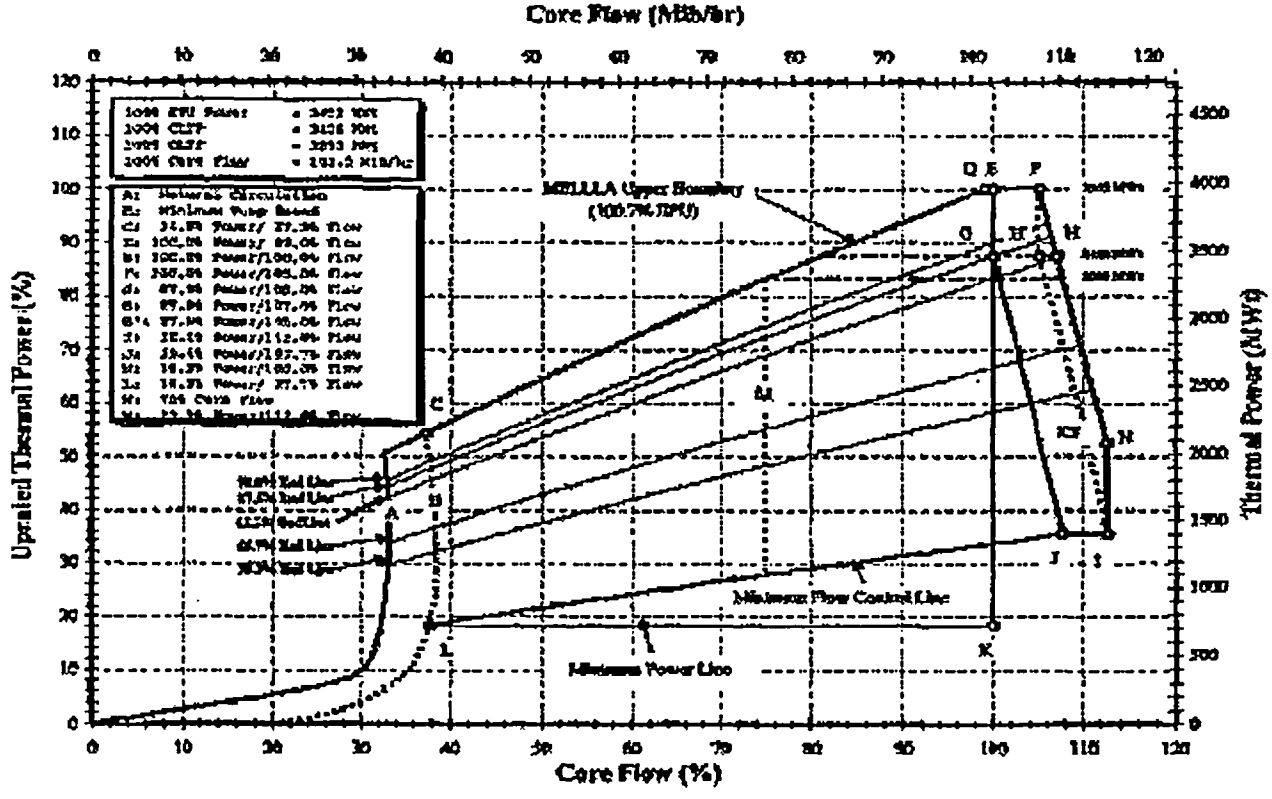

Figure 2-1 Browns Ferry Power/Flow Operating Map

3. REACTOR COOLANT AND CONNECTED SYSTEMS

3.1 NUCLEAR SYSTEM PRESSURE RELIEF

The nuclear system pressure relief system prevents overpressurization of the nuclear system during AOOs, the plant ASME Upset overpressure protection event, and postulated ATWS events. The MSRVs along with other functions provide this protection. An evaluation was performed in order to confirm the adequacy of the pressure relief system for EPU conditions. The adequacy of the pressure relief system is also demonstrated by the overpressure protection evaluation performed for each reload core and by the ATWS evaluation performed for EPU (Section 9.3.1).

For Browns Ferry, no MSRV setpoint increase is needed because there is no change in the dome pressure or simmer margin. Therefore, there is no effect on valve functionality (opening/closing).

3.1.1 MSRV Setpoint Tolerance

MSRV setpoint tolerance is independent of EPU. EPU evaluations are performed using the existing MSRV setpoint tolerance analytical limit of 3% as a basis. Actual historical in-service surveillance of MSRV setpoint performance test results are monitored separately for compliance to the TS requirements.

3.2 REACTOR OVERPRESSURE PROTECTION ANALYSIS

The design pressure of the reactor vessel remains at 1250 psig. The acceptance limit for pressurization events is the ASME code allowable peak pressure of 1375 psig (110% of design value). The overpressure protection analysis description and analysis method are provided in Section 5.5.1.4 and Appendix E of ELTR1 (Reference 1). As shown in Table E-1 of ELTR1, the limiting pressurization events are the MSIV closure and turbine trip with turbine bypass failure. Both events are (conservatively) analyzed assuming a failure of the valve position scram. The analyses also assume that the events initiate at a reactor dome pressure of 1055 psig (which is higher than the nominal EPU dome pressure), the MSRV analytical limits in Table 5-1, and one MSRV (with the lowest setpoint) OOS. Starting from 102% of EPU RTP, the calculated peak RPV pressure, located at the bottom of the vessel, is 1342 psig. The corresponding calculated maximum reactor dome pressure is 1314 psig. The peak calculated RPV pressure remains below the 1375 psig ASME limit, and the maximum calculated dome pressure remains below the TS 1325 psig Safety Limit. Therefore, there is no decrease in margin of safety. The results of the EPU overpressure protection analysis are given in Figures 3-1 and 3-2 and are consistent [[

]]

3.3 REACTOR VESSEL AND INTERNALS

The RPV structure and support components form a pressure boundary to contain the reactor coolant and moderator, and form a boundary against leakage of radioactive materials into the drywell. The RPV also provides structural support for the reactor core and internals.

Comprehensive reviews have assessed the effects of increased power conditions on the reactor vessel and its internals. These reviews and associated analyses show continued compliance with the original design and licensing criteria for the reactor vessel and internals.

3.3.1 Reactor Vessel Fracture Toughness

The neutron fluence is both reanalyzed for EPU, based on capsule flux wire data, and recalculated using 2-dimensional neutron transport theory (Reference 3); the neutron transport methodology is consistent with Regulatory Guide 1.190. The Regulatory Guide 1.190 fluxes are conservatively applied for the entire 60-year plant life. The revised fluence is used to evaluate the vessel against the requirements of 10 CFR 50, Appendix G. The results of these evaluations indicate that:

(a) The USE remains bounded by the BWROG equivalent margin analysis, thereby demonstrating compliance with Appendix G.

(b) The beltline material RT_{NDT} remains below 200°F.

(c) The Technical Specification P-T curves have been revised in accordance with the 1998 Edition of the ASME Boiler and Pressure Vessel Code including 2000 Addenda (Reference 4). The hydrotest pressure for EPU is the minimum nominal operating pressure.

(d) The 40 year life (34 effective full power year (EFPY)) shift is increased, and consequently, requires a change in the adjusted reference temperature, which is the initial RTNDT plus the shift. This shift was used to revise the P-T curves for EPU (Reference 4). These values and the 60-year life (52 EFPY) shift are provided in Tables 3-1a and 3-1b, for Browns Ferry Units 2 and 3, respectively.

(e) The surveillance program consists of three capsules for each unit. One capsule containing Charpy specimens was removed from the Browns Ferry Unit 2 vessel after 8.2 EFPY of operation (end of Fuel Cycle 7), tested, reconstituted, and placed into the vessel during the Unit 2 Cycle 8 Refueling Outage. The remaining two capsules have been in the reactor vessel since plant startup. EPU has no effect on the existing surveillance schedule. The first Browns Ferry Unit 3 capsule was removed from the vessel during the Fuel Cycle 8 outage, but was not tested. Browns Ferry is part of the BWRVIP ISP / SSP Program and complies with the withdrawal schedule specified for representative or surrogate surveillance capsules that now represent each unit. Therefore, the 10 CFR 50, Appendix H surveillance capsule schedule for the ISP/SSP governs. Implementation of EPU has no effect on the BWRVIP withdrawal schedule.

The maximum nominal operating dome pressure for EPU is unchanged from that for current power operation. Therefore, the hydrostatic and leakage test pressures are acceptable for the EPU. Because the vessel is in compliance with the regulatory requirements, operation with EPU does not have an adverse effect on the reactor vessel fracture toughness.

3.3.2 Reactor Vessel Structural Evaluation

The effect of EPU was evaluated to ensure that the reactor vessel components continue to comply with the existing structural requirements of the ASME Boiler and Pressure Vessel Code. For the components under consideration, the 1965 code with addenda to and including summer 1965 for Unit 2 and summer 1966 for Unit 3, are the codes of construction, and were used as the governing codes. However, if a component's design has been modified, the governing code for that component was the code used in the stress analysis of the modified component. New stresses were determined by scaling the "original" stresses based on the EPU conditions of temperature and flow. The analyses were performed for the design, the Normal and Upset, and the Emergency and Faulted conditions. Any increase in annulus pressurization, jet reaction, pipe restraint, or fuel lift loads, was considered in the analysis of the components affected for Normal, Upset, Emergency, and Faulted conditions.

3.3.2.1 Design Conditions

Because there are no changes in the design conditions (vessel pressure and temperature) due to EPU, the design stresses are unchanged and the Code requirements are met.

3.3.2.2 Normal and Upset Conditions

The reactor coolant temperature and flows (except core flow) at EPU conditions are only slightly changed from those at current rated conditions. A CLTP analysis for Browns Ferry was performed in 1997. Only changes in temperature and flow since that time, are considered herein. The only other loads, which could affect the EPU RPV evaluation are mechanical loads such as seismic, fuel lift and Recirculation LOCA loads which do not change with EPU. Therefore, only changes in temperature and flow are considered. Evaluations were performed at conditions that bound the slight change in operating conditions. The type of evaluations is mainly reconciliation of the stresses and usage factors to reflect EPU conditions. A primary plus secondary stress analysis was performed showing EPU stresses still meet the requirements of the ASME Code, Section III, Subsection NB. Lastly, the fatigue usage was evaluated for the limiting location of components with a usage factor greater than 0.5. The Browns Ferry fatigue analysis results for the limiting components are provided in Tables 3-2a and 3-2b. The Browns Ferry analysis results for EPU show that all components meet their ASME Code requirements.

Browns Ferry FW nozzles with the triple-sleeve, double-seal, thermal sleeve design are qualified by UT inspection methods based on ASME Section XI Code, which are approved by NRC.

FFWTR is considered in the fatigue usage evaluation and included with the system cycling effects shown in Tables 3-2a and 3-2b.

3.3.2.3 Emergency and Faulted Conditions

The stresses due to Emergency and Faulted conditions are based on loads such as peak dome pressure, which are unchanged. Therefore, Code requirements are met for all RPV components.

3.3.3 Reactor Internal Pressure Differences (RIPDs)

The increase in core average power alone would result in higher core loads and RIPDs due to the higher core exit steam quality.

The RIPDs are calculated for Normal (steady-state operation), Upset, and Faulted conditions for all major reactor internal components. [[

]]

Tables 3-3 through 3-5 compare results for the various loading conditions between current analysis results and operation with EPU for the vessel internals that are affected by the changed RIPDs.

3.3.4 Reactor Internals Structural Evaluation

The reactor internals consist of the CSS components and non-CSS components. The reactor internals are not certified to the ASME code; except the control rod drive as noted, however, the requirements of the code are used as guidelines in their design basis analysis. The evaluations and stress reconciliation in support of the thermal power increase are performed consistent with the design basis analysis of the components. The reactor internal components evaluated are:

Core Support Structure Components

- Shroud
- Shroud Support
- Core Plate
- Top Guide
- Control Rod Drive Housing
- Control Rod Guide Tube
- Orificed Fuel Support
- Fuel Channel

Non-Core Support Structure Components

- Steam Dryer
- FW Sparger
- Jet Pumps
- Core Spray Line and Sparger
- Access Hole Cover
- Shroud Head and Steam Separator Assembly
- In-core Housing and Guide Tube
- Vessel Head Cooling Spray Nozzle
- Jet Pump Instrument Penetration Seal
- Differential Pressure and Standby Liquid Control Line
- Control Rod Drive

The original configurations of the internal components are considered in the EPU evaluation unless a component has undergone permanent structural modifications, in which case, the modified configuration is used as the basis for the evaluation.

The effects on the loads as a result of the thermal-hydraulic changes due to EPU are evaluated for the reactor internals. All applicable loads and load combinations are considered consistent with the existing design basis analysis. These loads include the RIPDs, seismic loads, flow induced and acoustic loads due to RSLB-LOCA, and thermal loads. The RIPDs increase for some components/loading conditions as a result of EPU. The flow conditions and thermal effects were considered in the evaluation, as applicable. The seismic response is unaffected by EPU. The acoustic and flow induced loads in the annulus as a result of the RSLB-LOCA are included in the evaluation and are bounded by pre-EPU values.

The EPU loads are compared to those in the existing design basis analysis. If the loads do not increase due to EPU, then the existing analysis results bound the EPU conditions, and no further evaluation is required or performed. If the loads increase due to the EPU, then the effect of the load increase is evaluated further. [[

]]

Table 3-6 presents the governing stresses for the various reactor internal components. All stresses are within allowable limits and the reactor internal components are demonstrated to be structurally adequate for EPU.

The following reactor vessel internals are evaluated for the effects of changes in loads due to EPU

a) **Shroud:** [[

]] Therefore, the structural integrity of the Shroud is acceptable for EPU.

b) **Shroud Support:** [[

]] Therefore, the structural integrity of the Shroud Support is acceptable for EPU.

c) **Core Plate:** [[

]] Therefore, the core plate remains structurally qualified for EPU.

d) **Top Guide:** [[

]] Therefore, the structural integrity of the top guide is acceptable for EPU.

e) **Control Rod Drive Housing:** [[

]] Therefore, the structural integrity of the CRD housing is acceptable for EPU.

f) **Control Rod Guide Tube:** [[

]] Therefore, the structural integrity of the control rod guide tube is acceptable for EPU.

g) **Orificed Fuel Support:** [[

]] Therefore, the structural integrity of the orificed fuel support is acceptable for EPU.

h) **Fuel Channel:** [[

]] Therefore, the structural integrity of the fuel channels is acceptable for EPU.

i) **Steam Dryer:** [[

]] In response to the recent dryer failures observed at another BWR site during EPU operation, a detailed evaluation will be performed to examine dryer components susceptible to failure at EPU conditions. The results of the quantitative evaluation will be used to identify any additional modifications needed to maintain steam dryer structural

integrity at EPU conditions. If any steam dryer components requiring modification are identified, these modifications will be implemented prior to operation at the EPU conditions. Refer to Section 3.3.5.

j) **Feedwater Sparger:** [[

]] Therefore, the structural integrity of the FW sparger is acceptable for EPU.

k) **Jet Pumps:** [[

]] Therefore, the structural integrity of the jet pump assembly is acceptable for EPU.

Jet Pump Riser Brace Repair (Unit 3): Because the load conditions pertaining to the jet pump and the riser brace repair remain unaffected by EPU, the existing repair design basis remains valid for EPU. Repair inspection, however, should continue using the recommendations currently in place.

l) **Core Spray Lines and Spargers:** [[

]]

Therefore, the structural integrity of the core spray line and the spargers is acceptable for EPU.

Core Spray Line T-box and Downcomer Modifications (Unit 3): Because the applicable loads for the core spray system remain unaffected by EPU, the Core Spray Line T-box and Downcomer modifications remain qualified in the repaired condition. Repair inspections should continue using the current recommendations.

m) **Access Hole Cover:** [[

]] Therefore, the structural integrity of the Access Hole Cover is acceptable for EPU.

n) **Shroud Head and Steam Separator Assembly (Including Shroud Head Bolts):** [[

]] Therefore, the structural integrity of the shroud head and steam separator assembly is acceptable for EPU.

o) **In-Core Housing and Guide Tube:** [[

]] Therefore, the structural integrity of the In-core Housing and Guide Tube is acceptable for EPU.

p) **Vessel Head Cooling Spray Nozzle:** [[

]] Therefore, the structural integrity of the vessel head cooling spray nozzle is acceptable for EPU.

q) **Jet Pump Instrument Penetration Seal:** [[

]] Therefore, the structural integrity of the jet pump instrument penetration seal is acceptable for EPU.

r) **Core Differential Pressure and Liquid Control Line:** [[

]] Therefore, the structural integrity of the differential pressure and standby liquid control line is acceptable for EPU.

s) **Control Rod Drive:** [[

]] Therefore, the structural integrity of the control rod drive is acceptable for EPU.

3.3.5 Flow Induced Vibration

The core flow dependent RPV internals (in-core guide tube and control rod guide tube components) are acceptable for EPU operation because the maximum core flow does not change.

EPU operation increases the steam production in the core, resulting in an increase in the core pressure drop. There is only a slight increase (0.1%) in maximum drive flow at EPU conditions. The increase in power may increase the level of reactor internals vibration. Analyses were performed to evaluate the effects of FIV on the reactor internals at EPU conditions. This evaluation used a bounding reactor power of 3952 MWt and 105% of rated core flow. This assessment was based on vibration data obtained during startup testing of a prototype plant (Browns Ferry Unit 1). For components requiring an evaluation but not instrumented in the prototype plant, vibration data acquired during the startup testing from similar plants or acquired outside the RPV is used. The expected vibration levels for EPU were estimated by extrapolating the vibration data recorded in the prototype plant or similar plants and on GE BWR operating experience. These expected vibration levels were then compared with the established vibration acceptance limits. The following components were evaluated:

a) Shroud

b) Shroud head and moisture separator

c) Jet pumps

d) FW sparger

e) In-core guide tubes

f) Control rod guide tubes

g) Steam dryer

h) Jet pump sensing lines

The results of the vibration evaluation show that continuous operation at a reactor power of 3952 MWt and 105% of rated core flow does not result in any detrimental effects on the safety-related reactor internal components

[[

]]

During EPU operation, the components in the upper zone of the reactor, such as the moisture separators and dryer, are mostly affected by the increased steam flow. Components in the core region and components such as the core spray line are primarily affected by the core flow. Components in the annulus region such as the jet pump are primarily affected by the recirculation pump drive flow and core flow. For the EPU conditions, there is no change in the maximum licensed core flow in comparison to the CLTP condition, resulting in negligible changes in FIV on the components in the annulus and core regions. Only the moisture separator and dryer are significantly affected by EPU conditions. The steam dryer and moisture separators are not safety-related components. However, the moisture separator loads act on the shroud through the shroud head. Because the shroud is a safety-related component, the separator/shroud structure was tested at various power conditions up to rated power during startup. The separator/shroud structure was evaluated from these test data.

Recent uprate experience indicates that FIV at EPU conditions may lead to high cycle fatigue failure of some dryer components. A detailed evaluation will be performed to examine dryer components susceptible to failure at EPU conditions. The results of the quantitative evaluation will be used to identify any additional modifications needed to maintain steam dryer structural integrity at EPU conditions. If any steam dryer components requiring modification are identified, these modifications will be implemented prior to operation at the EPU conditions.

The calculations for EPU conditions indicate that vibrations of all safety-related reactor internal components are within the GE acceptance criteria. The analysis is conservative for the following reasons:

- The GE criteria of 10,000 psi peak stress intensity is less than the ASME Code criteria of 13,600 psi;
- The modes are absolute summed; and
- The maximum vibration amplitude in each mode is used in the absolute sum process, whereas in reality the peak vibration amplitudes are unlikely to occur at the same time.

In addition to the above components a supplemental evaluation was performed for additional components per the requirement of NRC Regulatory Guide 1.20 evaluated for FIV. The following components were evaluated and found to be acceptable for FIV effects at EPU conditions: guide rods, top head instrument nozzle, head spray nozzle, top head vent nozzle, CS sparger, CS piping, fuel assembly, shroud head bolts, MSL nozzle, water level instrument nozzle, and top guide.

Based on the above, it is concluded that FIV effects are expected to remain within acceptable limits at EPU conditions.

3.3.6 Steam Separator and Dryer Performance

The performance of the steam separators and dryer has been evaluated to ensure that the quality of the steam leaving the reactor pressure vessel remains acceptable at EPU conditions. EPU increases the saturated steam generated in the reactor core. At constant core flow, this results in an increase in the separator inlet quality and dryer face velocity and a decrease in the water level inside the dryer skirt. These factors, in addition to the core radial power distribution affect the steam separator-dryer performance. Steam separator-dryer performance was evaluated at EPU equilibrium cycle limiting conditions of high radial power peaking and the applicable core flow range shown on the power-flow map (Figure 2-1). The predicted steam moisture content was found acceptable.

3.4 REACTOR RECIRCULATION SYSTEM

[[

]]

The EPU power condition is accomplished by operating along extensions of current rod lines on the power/flow map (Figure 2-1) with no increase in the maximum core flow at EPU RTP. The core reload analyses are performed with the most conservative allowable core flow. The evaluation of the reactor recirculation system performance at the EPU RTP will ensure that adequate core flow can be maintained.

[[

]]

SLO is unchanged by EPU.

The system piping has been reviewed for operation at the uprated conditions and found to meet its design requirements (see Section 3.5). System components (e.g., pumps and valves) will be evaluated at EPU conditions to ensure that safety and design objectives are met.

3.5 REACTOR COOLANT PRESSURE BOUNDARY PIPING

The effects of the EPU have been evaluated for the Recirculation, MS (inside containment), MS Drains, RCIC, HPCI, FW (inside containment), RWCU, CS, SLC, RHR, RPV Head Vent line, MSRVDL and CRD piping systems using the present code(s) of record. The effects of pressure, flow, vibration and thermal expansion displacements (where applicable) were evaluated. The evaluations of the above piping systems are either summarized in the following subsections or in Section 3.11. The original Codes of record (as referenced in the appropriate calculations), Code allowable, and analytical techniques were used and no new assumptions were introduced.

An alternate piping evaluation process was used for the MS piping evaluation for the Browns Ferry EPU instead of the generic process described in Appendix K of ELTR1. A description of the Browns Ferry piping evaluation process is included in Section 3.5.2.

Flow-accelerated corrosion for all potentially affected piping systems is addressed in 3.11.3.

3.5.1 Recirculation System Evaluation

The Recirculation system was evaluated for compliance with the B31.1 Power Piping Code stress criteria for pipe and pipe components, and for the effects of vibration and thermal expansion displacements on the piping snubbers, hangers, struts and pipe whip restraints. Piping interfaces with RPV nozzles, penetrations, pumps and valves were also evaluated.

3.5.1.1 Pipe Stresses

The effects of power uprate have been evaluated for the recirculation loop piping using the present code of record: B31.1.0 Power Piping Code, 1967 Edition. The piping was evaluated for compliance with the B31.1 Code stress criteria and for the effects of thermal expansion displacements on the piping snubbers, hangers, and struts. Piping interfaces with RPV nozzles, penetrations, pumps and valves were also evaluated.

A review of the changes in pressure, temperature, and flow associated with EPU indicate that piping load changes do not result in load limits being exceeded for the recirculation piping or for RPV nozzles. The original design analyses have sufficient differences (excess design margins) between calculated stresses and B31.1 Code limits to justify operation at the EPU operating flow, pressure, and temperature.

The design adequacy evaluation results show that the requirements of B31.1 Power Piping Code requirements are satisfied for the recirculation piping systems. Therefore, the EPU does not have an adverse effect on the Recirculation piping design. No new postulated pipe break locations were identified.

3.5.1.2 Pipe Supports

The Recirculation system was evaluated for the effects of vibration and thermal expansion displacements on the piping snubbers, hangers, and struts. A review of the changes in temperature and pressure associated with the EPU indicates that piping load changes do not result in any support load limit being exceeded.

3.5.1.3 Flow Accelerated Corrosion

The Recirculation system piping and components are made of stainless steel and are not subject FAC degradation.

3.5.2 Main Steam and Associated Piping System Evaluation (inside containment)

The MS piping system and associated branch piping (inside containment) was evaluated for compliance with the USAS-B31.1.10, 1967 Code stress criteria. [[

]]

The MS system flow will increase by approximately 20% for EPU. As a result of the increases in flow, the TSV closure forces will increase significantly. Due to these increases in transient forces, analyses for the TSV closure transient were performed for the MS piping. The TSV fluid transient loads were generated utilizing the bounding closing time for the TSV.

The MS piping and pipe supports were evaluated for the TSV fluid transient loads in combination with pressure, deadweight, and thermal loads. Because a seismic event may cause a unit trip and a TSV closure, the TSV transient loads were also considered concurrent with applicable seismic loads. Due to the time relationships between the loads resulting from TSV, MSRV discharge, and pipe break events (i.e., LOCA); no combination of these loads is required.

The evaluation of the supporting structure is being reviewed. Where supports from different main steam lines or different systems load the same member of the drywell steel, the seismic and TSV loads of these different lines will be combined by the SRSS method, on an as needed basis. Combination of these loads by the SRSS method is acceptable because the seismic response of different lines and the fluid transient forces for different lines are out-of-phase, with peak loads occurring at different times.

The branch piping connected to the MS headers (MSRVDL, RCIC, HPCI, RPV Vent, and MSIV Drain) was evaluated to determine the effect of the increased MS flow on the lines. This evaluation concluded that the branch lines are acceptable for the increased MS system flows following EPU. As with the MS piping, the pressures and temperatures for these branch lines do not change as a result of EPU.

Any modifications required to mitigate the effects of increased transient loads will be completed prior to EPU implementation.

3.5.2.1 Pipe Stresses

Analyses evaluating the increased turbine stop valve closure transient loading due to increases in MS flow indicate that piping stresses remain within the code allowables for the MS System. The original design analyses have sufficient design margin between calculated stresses and the USAS-B31.1.0 code allowable limits to justify operation at EPU conditions.

Similarly, the branch pipelines (MSRVDL, RCIC, HPCI, RPV Vent, and MSIV Drain) connected to the MS headers were evaluated to determine the effect of the increased MS flow on the lines. This evaluation concluded that pipe stresses will remain within the code allowables for the MS branch lines.

3.5.2.2 Pipe Supports

The pipe supports for the MS piping system have been evaluated for increased loading associated with the limiting transient at EPU conditions for adequate design margin to accommodate the

increased support loads. Any pipe support modifications deemed necessary due to EPU increased transient loads will be completed prior to EPU implementation.

The supporting structure for the MS piping system is currently being evaluated for increased loading associated with the limiting transient at EPU conditions. Any supporting structure modifications deemed necessary due to EPU increased transient loads will be completed prior to EPU implementation.

3.5.2.3 Flow Accelerated Corrosion

FAC for all potentially affected piping systems is addressed in Section 3.11.3.

3.5.3 Feedwater Evaluation

The FW system (inside containment) was evaluated for compliance with the USAS-B31.1.0-1967 or equivalent Code stress criteria, and for the effects of vibration and thermal expansion displacements on the piping snubbers, hangers and struts. Piping interfaces with RPV nozzles, penetrations, flanges and valves were also evaluated. The results of this evaluation are provided in Table 3-7a.

3.5.3.1 Pipe Stresses

A review of the small increases in pressure, temperature and flow associated with EPU indicates that piping load changes do not result in load limits being exceeded for the FW piping system or for RPV nozzles. The original design analyses have sufficient design margin between calculated stresses and USAS-B31.1.0-1967 Code allowable limits to justify operation at EPU conditions.

The design adequacy evaluation shows that the requirements of USAS-B31.1.0-1967 Code requirements remain satisfied. Therefore, EPU does not have an adverse effect on the FW piping design. No new postulated pipe break locations were identified.

3.5.3.2 Pipe Supports

The FW system was evaluated for the effects of vibration and thermal expansion displacements on the piping snubbers, hangers, and struts. A review of the increases in temperature and FW flow associated with EPU indicates that piping load changes do not result in any load limit being exceeded.

3.5.3.3 Flow-Accelerated Corrosion

Flow-accelerated corrosion for all potentially affected piping systems is addressed in Section 3.11.3.

3.5.4 Other RCPB Piping Evaluation

This section addresses the adequacy of the other RCPB piping designs, for operation at the EPU conditions. The nominal operating pressure and temperature of the reactor are not changed by EPU. Aside from MS and FW, no other system connected to the RCPB experiences a significant increased flow rate at EPU conditions. Only minor changes to fluid conditions are experienced by these systems due to higher steam flow from the reactor and the subsequent change in fluid conditions within the reactor. Additionally, dynamic piping loads for MSRV at EPU conditions are bounded by

those used in the existing analyses. The EPU effects have been evaluated for the RCPB portion of the RPV head vent line, SLC, CS, RPV bottom drain, MSRV discharge piping and RWCU piping, as required.

3.5.4.1 Pipe Stresses

These systems were evaluated for compliance with the USAS B31.1 or ASME Code stress criteria (as applicable). Because none of these piping systems experience any significant change in operating conditions, they are all acceptable as currently designed.

3.5.4.2 Pipe Supports

The systems listed above were evaluated for the effects of vibration and thermal expansion displacements on the piping snubbers, hangers and struts. A review of the changes in pressure, temperature and flow associated with EPU indicates that piping load changes do not result in any load limit being exceeded.

3.5.4.3 Other RCPB Piping Flow-Accelerated Corrosion

Flow-accelerated corrosion for all potentially affected piping systems is addressed in Section 3.11.3.

3.5.5 Piping Flow Induced Vibration

Key applicable structures include the MS system piping and suspension, the FW system piping and suspension, and the RRS system piping and suspension. In addition, branch lines attached to the MS system piping are considered.

RRS drive flow is not significantly increased (< 5%) during EPU operation. [[

]]

The MS and FW piping have increased flow rates and flow velocities in order to accommodate EPU. As a result, the MS and FW piping experience increased vibration levels, approximately proportional to the square of the flow velocities. The ASME Code and nuclear regulatory guidelines require some vibration test data be taken and evaluated for these high-energy piping systems during initial operation at EPU conditions. Vibration data for the MS and FW piping inside containment will be acquired using remote sensors, such as displacement probes, velocity sensors, and accelerometers. A piping vibration startup test program will be performed and the results will be reviewed for acceptability. The FIV testing will be performed during EPU power ascension.

The safety-related thermowells and probes in the MS and FW piping systems were evaluated and found to be adequate for the increased MS and FW flow as a result of EPU.

3.6 MAIN STEAM LINE FLOW RESTRICTORS

The increase in steam flow rate has no significant effect on flow restrictor erosion. There is no effect on the structural integrity of the MS flow element (restrictor) due to the increased differential pressure because the restrictors were designed and analyzed for the choke flow condition.

Following a postulated steam line break outside containment, the fluid flow in the broken steam line increases until the MSL flow restrictor limits the fluid flow. Because the maximum operating dome pressure does not change, the resulting break flow rate is unchanged from the current analysis and the operational stresses are not affected. Therefore, the MSL flow restrictors are not significantly affected by EPU.

3.7 MAIN STEAM ISOLATION VALVES

The MSIVs are part of the RCPB, and perform the safety function of steam line isolation during certain abnormal events. The MSIVs must be able to close within a specified time range at all design and operating conditions. They are designed to satisfy leakage limits set forth in the plant TS.

The MSIVs have been [[ ]] evaluated, as discussed in Section 4.7 of ELTR2. The evaluation covers both the effects of the changes to the structural capability of the MSIV to meet pressure boundary requirements, and the potential effects of EPU-related changes to the safety functions of the MSIVs. [[

]] The MSIVs will be modified to accommodate the higher valve stem forces caused by the increased steam flow rate. Therefore, [[

]] and the MSIVs are acceptable for EPU operation.

3.8 REACTOR CORE ISOLATION COOLING

The RCIC system evaluation scope is provided in Section 5.6.7 of ELTR1.

The RCIC system is required to maintain sufficient water inventory in the reactor to permit adequate core cooling following a reactor vessel isolation event accompanied by loss of flow from the FW system. The system design injection rate must be sufficient for compliance with the system limiting criteria to maintain the reactor water level above TAF at the EPU conditions. The RCIC system is designed to pump water into the reactor vessel over a wide range of operating pressures. As described in Section 9.1.3, this event is addressed on a plant specific basis. The results of the Browns Ferry plant specific evaluation indicate adequate water level margin above TAF at the EPU conditions. Thus, the RCIC injection rate is adequate to meet this design basis event.

An operational requirement is that the RCIC system can restore the reactor water level while avoiding ADS timer initiation and MSIV closure activation functions associated with the low-low-low reactor water level setpoint (Level 1). This requirement is intended to avoid unnecessary

initiations of these safety systems. The results of the Browns Ferry plant specific evaluation indicates that the RCIC system is capable of maintaining the water level outside the shroud above nominal Level 1 setpoint through a limiting LOFW event at the EPU conditions. Thus, the RCIC injection rate is adequate to meet the requirements for inventory makeup (see Section 9.1).

For the EPU, there is no change to the normal reactor operating pressure and the MSRV setpoints remain the same. There is no change to the maximum specified reactor pressure for RCIC system operation, [[

]] because there are no physical changes to the pump suction configuration, and no changes to the system flow rate or minimum atmospheric pressure in the suppression chamber or CST. EPU does not affect the capability to transfer the RCIC pump suction on high suppression pool level or low CST level from its normal alignment, the CST, to the suppression pool, and does not change the existing requirements for the transfer. For ATWS (Section 9.3.1) and Appendix R (Section 6.7.1), operation of the RCIC system at suppression pool temperatures greater than the operational limit may be accomplished by using the dedicated CST volume as the source of water. Therefore, the specified operational temperature limit for the process water does not change with the EPU. [[

]] The effect of EPU on the operation of the RCIC system during Station Blackout events is discussed in Section 9.3.2.

The reactor system response to a loss of FW transient with RCIC is discussed in Section 9.1.3.

For Browns Ferry, a portion of the CST volume (135,000 gallons) is reserved for RCIC operation by the use of a standpipe in the tank. The increase in reactor decay heat due to EPU reduces the amount of time that RCIC can maintain reactor vessel level in hot shutdown conditions utilizing this reserve volume from greater than 8 hours to a little less than 6 hours. This is not a safety-related function and procedures are in place to direct the establishment of additional sources of water if the CST level approaches the top of the standpipe. Additionally, the UFSAR provides a discussion of suppression pool temperature following reactor vessel isolation with RCIC operation. Operation of RCIC during this time would not be affected by EPU conditions; however, the energy added to the suppression pool from the MSRV discharge would increase due to the increased decay heat associated with EPU.

[[

]] Therefore, the RCIC system is acceptable for EPU.

3.9 RESIDUAL HEAT REMOVAL SYSTEM

The RHR system evaluation process is described in Section 5.6.4 of ELTR1. The following results for the RHR system evaluation [[

]]

The RHR system is designed to restore and maintain the reactor coolant inventory following a LOCA and remove reactor decay heat following reactor shutdown for normal, transient, and accident conditions. The EPU effect on the RHR system is a result of the higher decay heat in the core corresponding to the uprated power and the increased amount of reactor heat discharged into the containment during a LOCA. The RHR system is designed to operate in the LPCI mode, SDC mode, SPC mode, CSC mode, Supplemental Spent Fuel Pool Cooling and Standby Cooling/Crossties mode.

The LPCI mode, as it relates to the LOCA response, is discussed in Section 4.2.2.

The SPC mode is manually initiated following isolation transients or a postulated LOCA to maintain the containment pressure and suppression pool temperature within design limits. The CSC mode reduces drywell pressure, drywell temperature, and suppression chamber pressure following an accident. The adequacy of these operating modes is demonstrated by the containment analysis (Section 4.1).

The higher suppression pool temperature and containment pressure during a postulated LOCA (Section 4.1) do not affect hardware capabilities of RHR equipment to perform the LPCI, SPC, and CSC functions.

The Supplemental Spent Fuel Pool Cooling mode, using existing RHR heat removal capacity, provides supplemental fuel pool cooling capability in the event that the fuel pool heat load exceeds the heat removal capability of the FPCC system. The adequacy of fuel pool cooling, including use of the Supplemental Spent Fuel Pool Cooling mode, is addressed in Section 6.3.

3.9.1 Shutdown Cooling Mode

[[

]]

3.9.2 Suppression Pool Cooling Mode

The functional design basis as stated in the UFSAR for the SPC Mode during normal plant operation is to control the initial pool temperature below the TS limit to so that the pool temperature immediately after a blowdown does not exceed the condensation limit in the event of a design basis LOCA, and to ensure the long-term pool temperature does not exceed the torus attached piping analysis limit. The EPU maximum suppression pool temperature (Section 4.1.1) is utilized as the

torus attached piping analysis temperature limit in the torus attached piping analysis, therefore, this objective is met for EPU.

The increase in decay heat due to EPU increases the heat input to the suppression pool resulting in slightly higher containment temperature and pressure during the initial stages of a LOCA. The EPU effect on the containment (drywell and torus) temperature, pressure, and condensation limit after a design basis LOCA is described in the containment analysis (Section 4.1.1).

As shown in Section 4.2.5, there is adequate NPSH margin during the RHR pump operation under the post-LOCA operating conditions.

3.9.3 Containment Spray Cooling Mode

The CSC mode provides water from the suppression pool to spray headers in the drywell and suppression chamber to reduce containment pressure and temperature during post-accident conditions. Following EPU, increases in the post-LOCA containment spray temperature correspond to the increase in suppression pool temperature. The rate of increase has a negligible effect on the calculated values of drywell pressure, drywell temperature, and suppression chamber pressure since these parameters reach their highest values prior to actuation of the containment spray as shown in Section 4.1.1.2 and 4.1.1.3.

The CSC mode is used to reduce containment pressure following a LOCA, which can affect the available NPSH. The adequacy of NPSH margin during the RHR pump operation under the post-LOCA operating conditions is discussed in Section 4.2.5.

3.9.4 Supplemental Spent Fuel Pool Cooling

The RHR Supplemental Spent Fuel Pool Cooling Mode, using the existing RHR heat removal capacity, provides supplemental fuel pool cooling in the event that the fuel pool heat load exceeds the heat removal capability of the FPCC system due to off loading of the entire core. This mode operates along with the FPCC system to maintain the Fuel Pool temperature within acceptable limits during a reactor cold shutdown. The increased short-term fuel pool heat load due to EPU does not exceed the combined heat removal capacities of this mode and FPCC system. (See Section 6.3.)

3.9.5 Steam Condensing Mode

Steam Condensing mode of RHR is not installed at Browns Ferry.

3.9.6 Standby Cooling/Crossties

Standby Cooling/Crossties utilizes the standby coolant supply connection and the RHR crossties to provide additional long-term redundancy to the emergency core and containment cooling systems. This function is not affected by EPU because the performance requirements for the emergency core and containment cooling systems are not changed.

3.10 REACTOR WATER CLEANUP SYSTEM

RWCU system operation at the EPU RTP level slightly decreases the temperature within the RWCU system. This system is designed to remove solid and dissolved impurities from recirculated reactor coolant, thereby reducing the concentration of radioactive and corrosive species in the reactor coolant. The system is capable of performing this function at the EPU RTP level.

Based on operating experience, the FW iron input to the reactor increases as a result of the increased FW flow. This input increases the calculated reactor water iron concentration from 20.4 ppb to 23.7 ppb. However, this change is considered insignificant, and does not affect RWCU.

The effects of EPU on the RWCU system functional capability have been reviewed, and the system can perform adequately during EPU with the original RWCU system flow. This RWCU system flow results in a slight increase in the calculated reactor water conductivity (from 0.10 µS/cm to 0.11 µS/cm) because of the increase in FW flow. The present reactor water conductivity limits are unchanged for EPU and the actual conductivity remains within these limits.

The system piping and components have been reviewed for operation at the uprated conditions (pressure and temperature) and found to meet its safety and design objectives, including maintaining structural integrity during normal, upset, emergency, and faulted conditions. In the event of a HELB in the system piping, appropriate isolation shall be achieved (see Section 4.1.3). Refer to Sections 3.5 and 3.11 for evaluation of pipe and support adequacy, and Section 10.1 for the HELB evaluation.

3.11 BALANCE-OF-PLANT PIPING EVALUATION

The BOP piping systems evaluation consists of a number of piping subsystems that move fluid through systems outside the RCPB piping.

For some BOP piping systems, the flow, pressure, temperature, and mechanical loads do not increase. [[

]]

Large bore and small bore ASME Class 1, 2 and 3 equivalent piping and supports not addressed in Section 3.5 were evaluated for acceptability at EPU conditions. The evaluation of the BOP piping and supports was performed in a manner similar to the evaluation of RCPB piping systems and supports (Section 3.5), using applicable ASME Section III, Subsections NC/ND or B31.1 Power Piping Code equations. The original Codes of record (as referenced in the appropriate calculations), Code allowables, and analytical techniques were used and no new assumptions were introduced.

The LOCA hydrodynamic loads, including the pool swell loads vent thrust loads, CO loads and chugging loads were originally defined and evaluated for Browns Ferry. The structures attached to the torus shell, such as piping system, vent penetrations, and valves are based on these LOCA hydrodynamic loads. For EPU conditions, the LOCA torus shell response loads were re-evaluated using a more realistic RPV depressurization to within the capability of the available number of MSRVs. These loads were found to be acceptable and there are no resulting effects on the torus shell attached structures.

The effects of the EPU conditions have been evaluated for the following piping systems:

- MS - Outside Containment (specifically addressed in Section 3.11.4)
- Extraction Steam, Heater Vents and Drains
- FW and Condensate
- RWCU - Outside Containment
- RHR - Outside Containment
- RHR Service Water – Outside Containment
- CS - Outside Containment – Pump Suction / Pump Discharge
- HPCI – Outside Containment
- RCIC – Outside Containment
- SLCS - Outside Containment
- CRD
- EECW
- RBCCW
- SPC/ADHR
- RCW/Stator Cooling Water
- SGT
- Off Gas
- Torus Attached Piping including ECCS Suction Strainers

3.11.1 Pipe Stresses

Operation at the EPU conditions increases stresses on piping and piping system components due to slightly higher operating temperatures and flow rates internal to the pipes. For those systems with analysis, the maximum stress levels and fatigue analysis results were reviewed based on specific increases in temperature pressure and flow rate. (see Tables 3-7a and 3-7b). For those systems that do not require a detailed analysis, pipe routing and flexibility was evaluated and determined to be acceptable. These piping systems have been evaluated, using the process defined in Appendix K of ELTR1 and found to meet the appropriate code criteria for the EPU conditions, based on the design margins between actual stresses and code limits in the original design. All piping is below the code allowables of the present code of record: USAS B31.1.0 – 1967 Power Piping Code and ASME Boiler and Pressure Vessel Code – Section III, Division I through the summer 1977 Addenda for torus attached piping. No new postulated pipe break locations were identified.

3.11.2 Pipe Supports

Operation at the EPU conditions slightly increases the pipe support loadings due to increases in the temperature of the affected piping systems (see Tables 3-7a, 3.7b, and 3-7c).

The pipe supports of the systems affected by EPU loading increases (RHR, CS, and Torus attached piping systems) were reviewed to determine if there is sufficient margin to code acceptance criteria to accommodate the increased loadings. This review shows that in most cases there is adequate design margin between the original design stresses and code limits of the supports to accommodate the load increase. A very limited number of pipe supports will require a more detailed evaluation to show that the support structure is acceptable for the increased loading. Should any detailed evaluation show that the code limits cannot be met; modifications will be made prior to EPU implementation.

3.11.3 Flow Accelerated Corrosion

The integrity of high energy piping systems is assured by proper design in accordance with the applicable codes and standards. A consideration in assuring proper design and maintaining system operation within the design is the allowable piping thickness values. Piping thickness values of carbon steel components can be affected by FAC. Browns Ferry has an established program for monitoring pipe wall thinning in single phase and two-phase carbon steel piping. Process variables that influence FAC at Browns Ferry are moisture content, water chemistry, temperature, oxygen, flow path geometry and velocity, and material composition.

EPU operation results in some changes to parameters affecting FAC in those systems associated with the turbine cycle (e.g., condensate, FW, MS, extraction steam). The evaluation of and inspection for FAC in BOP systems is addressed by compliance with NRC Generic Letter 89-08, "Erosion/Corrosion in Piping." The Browns Ferry FAC program currently monitors the affected systems (see Section 10.7). Continued monitoring of the systems provides a high level of confidence in the integrity of potentially susceptible piping systems. Appropriate changes to piping inspection frequency will be implemented to ensure adequate margin is maintained for those systems where process conditions change. This includes adjustments to predict material loss rates to project the need for maintenance/replacement prior to reaching minimum wall thickness requirements. The program provides assurance that the EPU does not adversely affect piping systems potentially susceptible to pipe wall thinning due to FAC.

3.11.4 Main Steam and Associated Piping (Outside Containment)

The MS piping system (outside containment) was evaluated for compliance with Browns Ferry criteria. Included in the evaluation were the affects of EPU on piping stresses, piping supports and the associated building structure, turbine nozzles, and valves.

The MS piping pressures and temperatures outside containment are not affected by EPU; there was no effect on the analyses for these parameters. The increase in MS flow results in increased forces from the turbine stop valve closure transient. The turbine stop valve closure loads bound the MSIV valve loads because the MSIV closure time is significantly longer than the stop valve closure time. The MS analysis results are provided in Table 3-7c.

3.11.4.1 Pipe Stresses

A review of the increase in flow associated with EPU indicates that piping load changes do not result in load limits being exceeded for the MS piping system outside containment. The original design has sufficient design margin to justify operation at the EPU conditions. The pressure and temperature of the MS piping is unchanged for EPU and the pipe stresses are acceptable.

3.11.4.2 Pipe Supports

The pipe supports (primarily spring type supports) and turbine nozzles for the MS piping system outside containment were evaluated for the increased loading and movements associated with the turbine stop valve closure transient at EPU conditions. The evaluations demonstrate that the supports and turbine nozzles have adequate design margin to accommodate the increased loads and movements resulting from EPU.

3.12 REFERENCES

1. GE Nuclear Energy, "Generic Guidelines for General Electric Boiling Water Reactor Extended Power Uprate," (ELTR1), Licensing Topical Reports NEDC-32424P-A, Class III (Proprietary), February 1999; and NEDO-32424, Class I (Non-proprietary), April 1995.

2. GE Nuclear Energy, "Generic Evaluations of General Electric Boiling Water Reactor Extended Power Uprate," (ELTR2), Licensing Topical Reports NEDC-32523P-A, Class III (Proprietary), February 2000; NEDC-32523P-A, Supplement 1 Volume I, February 1999; and Supplement 1 Volume II, April 1999.

3. GE Nuclear Energy "GE Methodology to RPV Fast Neutron Flux Evaluations," Licensing Topical Report NEDC-32983P, Class III (Proprietary), August 2000 and NEDO-32983-A, Class I (Non-proprietary), December 2001.

4. NRC, March 10, 2004, "Browns Ferry Nuclear Plant, Units 2 and 3 - Issuance of Amendments Regarding Pressure-Temperature Limit Curves (TAC Nos. MC0807 and MC0808)", Amendments Nos. 288 and 247.

Table 3-1a

Browns Ferry Unit 2 Adjusted Reference Temperatures

40 Year Life (34 EFPY):

Plate

Thickness = 6.25 inches

34 EFPY Peak I.D. fluence = 1.5E+19 n/cm^2
34 EFPY Peak 1/4 T fluence = 1.0E+19 n/cm^2
34 EFPY Peak 3/4 T fluence = 1.0E+18 n/cm^2

Weld

Thickness = 6.13 inches

34 EFPY Peak I.D. fluence = 1.5E+19 n/cm^2
34 EFPY Peak 1/4 T fluence = 1.0E+19 n/cm^2
34 EFPY Peak 3/4 T fluence = 1.0E+18 n/cm^2

COMPONENT	HEAT OR HEAT/LOT	%Cu	%Ni	CF	Initial RTndt °F	1/4 T Fluence n/cm^2	34 EFPY Δ RTndt °F	σ_I	σ_Δ	Margin °F	34 EFPY Shift °F	34 EFPY ART °F
PLATES:												
Lower Shell												
6-127-14	C2467-2	0.16	0.52	112	-20	1.0E+19	48	0	17	34	82	62
6-127-15	C2465-1	0.17	0.48	117	-20	1.0E+19	50	0	17	34	84	64
6-127-17	C2460-2	0.13	0.51	88	0	1.0E+19	37	0	17	34	71	71
Lower Intermediate Shell												
6-127-6	A0981-1	0.16	0.53	98	-10	1.0E+19	42	0	17	34	76	66
6-127-16	C2467-1	0.16	0.52	112	-10	1.0E+19	43	0	17	34	81	72
6-127-20	C2849-1	0.11	0.50	73	-10	1.0E+19	31	0	15	32	63	52
WELDS:												
Longitudinal	SAW*	0.36	0.37	141	23.1	1.0E+19	60	13	28	62	133	145
Circumferences	D65733	0.09	0.65	117	-40	1.0E+19	50	0	25	50	99	59

* SAW chemistry based on BAW-2258/2259
◂ Specific weld heat chemistries are not available.

60 Year Life (52 EFPY):

Plate

Thickness = 6.13 inches

52 EFPY Peak I.D. fluence = 2.3E+19 n/cm^2
52 EFPY Peak 1/4 T fluence = 1.5E+19 n/cm^2
52 EFPY Peak 1/4 T fluence = 1.5E+19 n/cm^2

Weld

Thickness = 6.13 inches

52 EFPY Peak I.D. fluence = 2.3E+19 n/cm^2
52 EFPY Peak 1/4 T fluence = 1.5E+19 n/cm^2
52 EFPY Peak 1/4 T fluence = 1.5E+19 n/cm^2

COMPONENT	HEAT OR HEAT/LOT	%Cu	%Ni	CF	Initial RTndt °F	1/4 T Fluence n/cm^2	52 EFPY Δ RTndt °F	σ_I	σ_Δ	Margin °F	52 EFPY Shift °F	52 EFPY ART °F
PLATES:												
Lower Shell												
6-127-14	C2467-2	0.16	0.52	112	-20	1.5E+19	58	0	17	34	92	72
6-127-15	C2465-1	0.17	0.48	117	-20	1.5E+19	60	0	17	34	94	74
6-127-17	C2460-2	0.13	0.51	88	0	1.5E+19	45	0	17	34	79	79
Lower Intermediate Shell												
6-127-6	A0981-1	0.16	0.53	98	-10	1.5E+19	51	0	17	34	85	75
6-127-16	C2467-1	0.16	0.52	112	-10	1.5E+19	58	0	17	34	93	82
6-127-20	C2849-1	0.11	0.50	73	-10	1.5E+19	38	0	17	34	72	62
WELDS:												
Longitudinal	SAW*	0.24	0.37	141	23.1	1.5E+19	73	13	28	62	154	157
Circumferences	D65733	0.09	0.65	117	-40	1.5E+19	60	0	25	56	116	76

* SAW chemistry based on BAW-2258/2259
◂ Specific weld heat chemistries are not available.

Table 3-1b
Browns Ferry Unit 3 Adjusted Reference Temperatures

40 Year Life (34 EFPY):

Plate

Thickness = 6.13 Inches

34 EFPY Peak I.D. fluence = 1.5E+18 n/cm^2
34 EFPY Peak 1/4 T fluence = 1.0E+18 n/cm^2
34 EFPY Peak 3/4 T fluence = 1.0E+18 n/cm^2

Weld

Thickness = 6.13 Inches

34 EFPY Peak I.D. fluence = 1.5E+18 n/cm^2
34 EFPY Peak 1/4 T fluence = 1.0E+18 n/cm^2
34 EFPY Peak 3/4 T fluence = 1.0E+18 n/cm^2

COMPONENT	HEAT OR HEAT/LOT	%Cu	%Ni	CF	Initial RTndt °F	1/4 T Fluence n/cm^2	34 EFPY Δ RTndt °F	σ_I	σ_Δ	Margin °F	34 EFPY Shift °F	34 EFPY ART °F
PLATES:												
Lower Shell												
6-145-4	C3222-2	0.15	0.52	106	10	1.0E+18	45	0	17	34	79	89
6-145-7	C3213-1	0.13	0.58	80	-30	1.0E+18	38	0	17	34	72	82
6-145-12	C3217-2	0.14	0.66	101.5	-4	1.0E+18	43	0	17	34	77	73
Lower-Intermediate Shell												
6-145-1	C3201-2	0.13	0.60	91	-20	1.0E+18	39	0	17	34	73	53
6-145-2	C3188-2	0.10	0.49	65	-20	1.0E+18	28	0	14	28	55	53
6-145-6	87267-1	0.13	0.51	88	-20	1.0E+18	37	0	17	34	71	51
WELDS:												
Longitudinal	BSW[b]	0.24	0.37	141	23.1	1.0E+18	60	13	28	62	131	149
Circumferences	DS5733	0.09	0.66	117	-40	1.0E+18	50	0	25	50	90	50

[a] BSW chemistry based on BAW-2325/2339
[b] Specific weld heat chemistries are not available.

60 Year Life (52 EFPY):

Plate

Thickness = 6.13 Inches

52 EFPY Peak I.D. fluence = 2.3E+18 n/cm^2
52 EFPY Peak 1/4 T fluence = 1.6E+18 n/cm^2
52 EFPY Peak 3/4 T fluence = 1.6E+18 n/cm^2

Weld

Thickness = 6.13 Inches

52 EFPY Peak I.D. fluence = 2.3E+18 n/cm^2
52 EFPY Peak 1/4 T fluence = 1.6E+18 n/cm^2
52 EFPY Peak 3/4 T fluence = 1.6E+18 n/cm^2

COMPONENT	HEAT OR HEAT/LOT	%Cu	%Ni	CF	Initial RTndt °F	1/4 T Fluence n/cm^2	52 EFPY Δ RTndt °F	σ_I	σ_Δ	Margin °F	52 EFPY Shift °F	52 EFPY ART °F
PLATES:												
Lower Shell												
6-145-4	C3222-2	0.15	0.52	106	10	1.6E+18	55	0	17	34	99	99
6-145-7	C3213-1	0.13	0.58	80	-30	1.6E+18	46	0	17	34	80	80
6-145-12	C3217-2	0.14	0.66	101.5	-4	1.6E+18	52	0	17	34	94	82
Lower-Intermediate Shell												
6-145-1	C3201-2	0.13	0.60	91	-20	1.6E+18	47	0	17	34	81	61
6-145-2	C3188-2	0.10	0.49	65	-20	1.6E+18	34	0	17	34	67	67
6-145-6	87267-1	0.13	0.51	88	-20	1.6E+18	45	0	17	34	79	59
WELDS:												
Longitudinal	BSW[b]	0.24	0.37	141	23.1	1.6E+18	75	13	28	62	138	157
Circumferences	DS5733	0.09	0.66	117	-40	1.6E+18	60	0	25	50	110	75

[a] BSW chemistry based on BAW-2325/2339
[b] Specific weld heat chemistries are not available.

Table 3-2a

Browns Ferry Unit 2 CUFs of Limiting Components
(1)

Component	P + Q Stress (ksi)			CUF		
	Current	EPU	Allowable (ASME Code Limit)	Current	EPU	Allowable
FW Nozzle (Blend radius)	47.2(2)	49.2(2)	69.9 ($3S_m$)	0.984	0.997(4)	1.0
Main Closure Stud Cross section	49.2	49.2	73.4 ($3S_m$)	0.762	0.762	1.0
Maximum peripheral	103.3	103.3	110.1 ($3S_m$)			
Support Skirt	115.9(3)	115.9(3)	80.1 ($3S_m$)	0.904	0.904	1.0
Recirculation Outlet Nozzle	75.5	75.1	80.1 ($3S_m$)	0.779	0.779	1.0

Notes:

1. Only components with usage factors greater than 0.5 are included in this table.
2. S_{alt}, alternating stress in accordance with ASME code, Section III Subsection NB is shown.
3. Thermal bending has been included. P + Q stresses are acceptable per CLTP elastic-plastic analysis, which is valid for EPU conditions.
4. The combined usage factor for system cycling + rapid cycling is 0.9966 for normal duty and 0.997 for FFWTR.

Table 3-2b

Browns Ferry Unit 3 CUFs of Limiting Components

	P + Q Stress (ksi)			CUF[1]		
Component	Current	EPU	Allowable (ASME Code Limit)	Current	EPU	Allowable
FW Nozzle (Blend radius)	47.2[2]	49.2[2]	69.9 ($3S_m$)	0.984	0.997[4]	1.0
Main Closure Stud						
Cross section	49.2	49.2	73.4 ($3S_m$)	0.762	0.762	1.0
Maximum peripheral	103.3	103.3	110.1 ($3S_m$)			
Support Skirt	115.9[3]	115.9[3]	80.1 ($3S_m$)	0.904	0.904	1.0
Recirculation Outlet Nozzle	75.5	75.1	80.1 ($3S_m$)	0.779	0.779	1.0

Notes:

1. Only components with usage factors greater than 0.5 are included in this table.
2. S_{alt}, alternating stress in accordance with ASME code, Section III Subsection NB is shown.
3. Thermal bending has been included. P + Q stresses are acceptable per CLTP elastic-plastic analysis, which is valid for EPU conditions.
4. The combined usage factor for system cycling + rapid cycling is 0.9966 for normal duty and 0.997 for FFWTR.

Table 3-3

Browns Ferry RIPDs for Normal Conditions (psid)*

Parameter	CLTP	EPU
Core Plate and Guide Tube	22.84	24.40
Shroud Support Ring and Lower Shroud	31.06	32.89
Upper Shroud	8.23	8.55
Shroud Head	8.42	9.43
Shroud Head to Water Level (Irreversible**)	10.8	12.24
Shroud Head to Water Level (Elevation**)	1.07	0.94
Top Guide	0.61	0.61
Steam Dryer	0.33	0.42
Fuel Channel Wall	11.67	13.31

* 105% core flow

** Irreversible loss is the loss across the separators; the elevation loss or reversible head loss is the loss between the inside shroud to the exit of the separators.

Table 3-4

Browns Ferry RIPDs for Upset Conditions (psid)*

Parameter	CLTP	EPU
Core Plate and Guide Tube	25.24	26.80
Shroud Support Ring and Lower Shroud	33.46	35.29
Upper Shroud	12.34	12.82
Shroud Head	12.63	14.14
Shroud Head to Water Level (Irreversible**)	16.20	18.36
Shroud Head to Water Level (Elevation**)	1.61	1.41
Top Guide	1.10	0.92
Steam Dryer	0.50	0.62
Fuel Channel Wall	14.57	16.21

* 105% core flow

** Irreversible loss is the loss across the separators; the elevation loss or reversible head loss is the loss between the inside shroud to the exit of the separators.

Table 3-5

Browns Ferry RIPDs for Faulted Conditions (psid)*

Parameter	CLTP	EPU
Core Plate and Guide Tube	30	28.5
Shroud Support Ring and Lower Shroud	52	51
Upper Shroud	30	29
Shroud Head	30	29.5
Shroud Head to Water Level (Irreversible**)	32	32
Shroud Head to Water Level (Elevation**)	2.1	1.4
Top Guide	2.8	1.1
Steam Dryer***	No Change	
Fuel Channel Wall	14.6	15.5

* 105% core flow

** Irreversible loss is the loss across the separators; the elevation loss or reversible head loss is the loss between the inside shroud to the exit of the separators.

*** These pressure drops are for an MSLB outside primary containment. The steam dryer pressure drop is greatest for the high flow, low power condition (interlock point). The interlock condition has not changed with the EPU.

Table 3-6

Browns Ferry Reactor Internal Components - Summary of Stresses

Item	Component Location	Category/ Service Condition	Stress/Load Category	CLTP Value	EPU Value	Allowable
1	Shroud	Normal/Upset Emergency/ Faulted	Bounded by Pre-EPU design basis Loads/Stresses			
2	Shroud Support	Design Operating	Stress (psi)	24,500	30,062	34,950
3	Shroud Support	Faulted	Bounded by Pre-EPU design basis Loads/Stresses			
4	Core Plate	Normal/Upset	Buckling/Sliding ΔP (psid)	25.2	26.8	28.0
5	Core Plate	Emergency/ Faulted	Bounded by Pre-EPU design basis Loads/Stresses			
6	Top Guide	Normal/Upset Emergency/ Faulted	Bounded by Pre-EPU design basis Loads/Stresses			
7	CRD Housing	Qualitative Assessment (See Section 3.3.4(e))				
8	Control Rod Guide Tube	Normal/Upset	ΔP Buckling (p/pc)	0.24	0.26	0.40
9	Control Rod Guide Tube	Emergency/ Faulted	Bounded by Pre-EPU design basis Loads/Stresses			
10	Orificed Fuel Support	Normal/Upset	Stress (psi)	12,413	12,527	15,580
11	Orificed Fuel Support	Emergency/ Faulted	Bounded by Pre-EPU design basis Loads/Stresses			
12	Fuel Channels	Qualified per Proprietary Fuel Design Basis				
13	Steam Dryer (Hood)	Normal/Upset	Stress (psi)	4,054	5,027	16,950
14	Steam Dryer	Faulted	Bounded by Pre-EPU design basis Loads/Stresses			
15	FW Sparger Slotted Ring	Normal/Upset	Pm + Pb + Q – Therm. Bending (psi)	70,800	70,910	76,500
16	FW Sparger Header Pipe/Tee	Normal/Upset	Pm + Pb (psi)	5,190	6,990	21,450

Item	Component Location	Category/ Service Condition	Stress/Load Category	CLTP Value	EPU Value	Allowable
17	FW Sparger Header Pipe/Tee	Emergency	Pm + Pb (psi)	6,020	7,820	28,600
18	FW Sparger Header Pipe/Tee	Faulted	Pm + Pb (psi)	33,690	35,490	42,900
19	Jet Pump (including riser brace repair – BFN 3)	Normal/Upset Emergency/ Faulted	Bounded by Pre-EPU design basis Loads/Stresses			
20	Core Spray Line and Sparger (includes T-box and downcomer Repairs – BFN 3)	Qualitative Assessment (See Section 3.3.4(l))				
21	Access Hole Cover	Normal/Upset	Pm + Pb (psi)	6,756	7,093	34,950
22	Access Hole Cover	Emergency/ Faulted	Bounded by Pre-EPU design basis Loads/Stresses			
23	Shroud Head and Steam Separator Assembly (SHB)	Normal/Upset	Pm + Pb (psi)	33,993	34,489	34,950
24	Shroud Head and Steam Separator Assembly (SHB)	Emergency	Pm + Pb (psi)	31,348	34,671	52,425
25	Shroud Head and Steam Separator Assembly (SHB)	Faulted	Pm + Pb (psi)	41,432	41,758	69,900
26	In-Core Housing and Guide Tube	Qualitative Assessment (See Section 3.3.4(o))				
27	Vessel Head Cooling Spray Nozzle	Qualitative Assessment (See Section 3.3.4(p))				
28	Jet Pump Instrument Penetration Seal	Qualitative Assessment (See Section 3.3.4(q))				
29	Core Differential Pressure and Standby Liquid Control Line	Qualitative Assessment (See Section 3.3.4(r))				
30	CRD	Qualitative Assessment (See Section 3.3.4(s))				

Table 3-7a

Browns Ferry BOP Piping
FW, Extraction Steam, FW Heater Drains and Vents, and Condensate

Maximum pipe stress increase:	
Temperature expansion	5.5%
	Pressure 0%
Fluid Transients	0%
Maximum pipe support loading increase	
(due to thermal expansion loading):	5.5%

Table 3-7b

Browns Ferry BOP Piping CS and RHR
(Outside Containment)

Maximum pipe stress increase:	
Temperature expansion	14%
Pressure	0%
Fluid Transients	0%
Maximum pipe support loading increase	
(due to thermal expansion loading):	14%

Table 3-7c

Browns Ferry BOP Piping
Main Steam System
(Outside Containment)

Maximum pipe stress at EPU:	
Temperature expansion	No change
Pressure	No change
Fluid Transients	Acceptable[1]
Maximum pipe support loading	
EPU (due to thermal expansion loading):	No change
EPU (due to fluid transient loading):	Acceptable [1]

Notes:

1. Percentage increases for the MS piping (outside containment) are not provided because the turbine stop valve transient was not previously analyzed for Browns Ferry. Therefore, no comparison of the stresses or loads including turbine stop valve load case can be made. However, the results of the evaluations show that the piping stresses and the supports meet the acceptance criteria for the EPU conditions and no modifications are required for the MS piping outside containment.

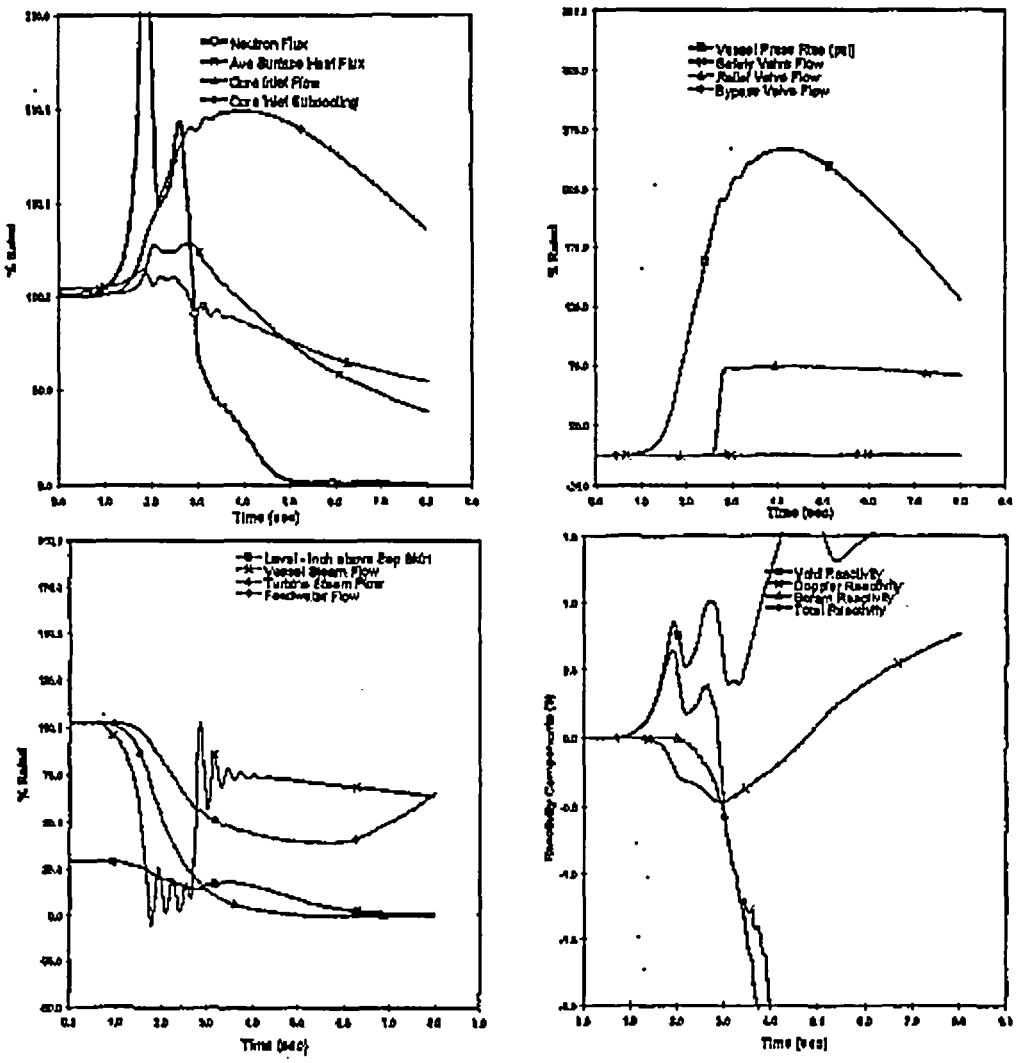

Figure 3-1
Browns Ferry Response to MSIV Closure with Flux Scram
(102% EPU power, 105% core flow, and 1055 psig initial dome pressure)

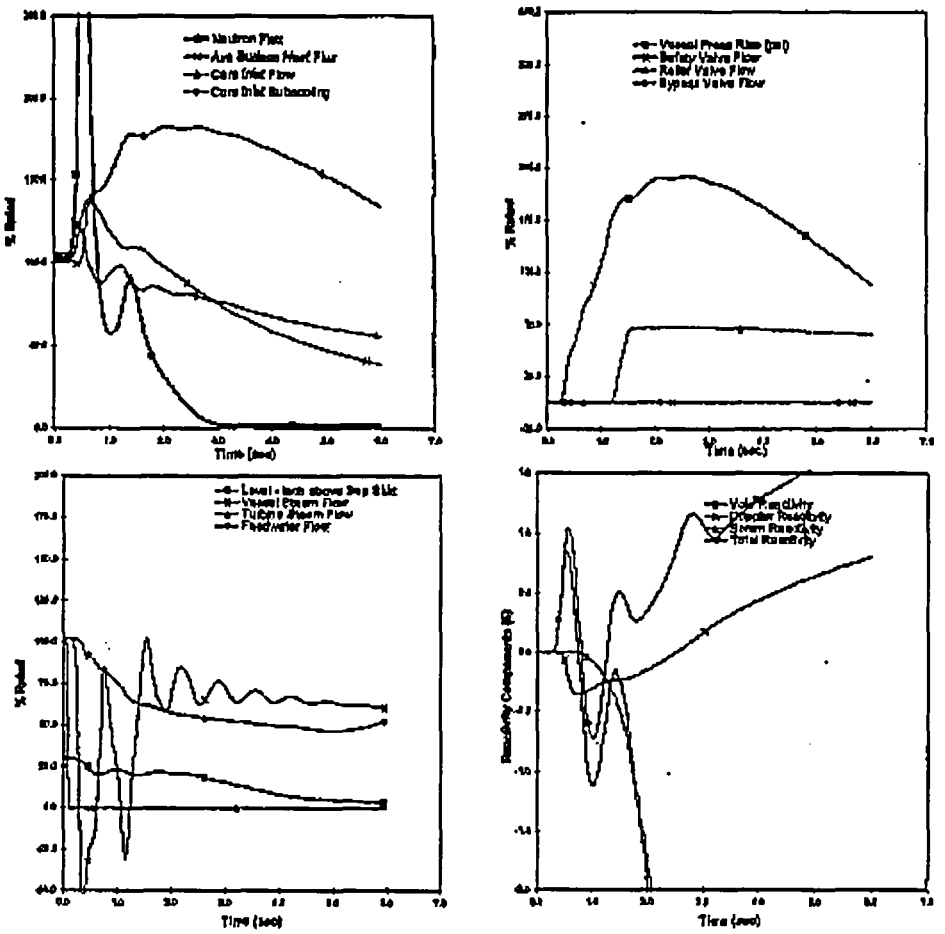

Figure 3-2
Browns Ferry Response to Turbine Trip with Bypass Failure and Flux Scram
(102% EPU power, 105% core flow, and 1055 psig initial dome pressure)

4. ENGINEERED SAFETY FEATURES

NUREG-0800, "Standard Review Plan for the Review of Safety Analysis Reports for Nuclear Power Plants," Section 6.1.1, subsection I states, "Engineered safety features (ESF) are provided in nuclear plants to mitigate the consequences of design basis or loss-of-coolant accidents." The Browns Ferry features evaluated within this section are designed to (directly) mitigate the consequences of postulated accidents, and thus, are classified in the plant UFSAR as engineered safety features.

4.1 CONTAINMENT SYSTEM PERFORMANCE

This section addresses the effect of the EPU on various aspects of the Browns Ferry containment system performance.

The UFSAR provides the containment responses to various postulated accidents that validate the design basis for the containment. Operation at the EPU RTP causes changes to some of the conditions for the containment analyses. For example, the short-term DBA LOCA containment response during the reactor blowdown is governed by the blowdown flow rate. This blowdown flow rate is dependent on the reactor initial thermal-hydraulic conditions, such as vessel dome pressure and the mass and energy of the vessel fluid inventory, which change slightly at the EPU RTP. Also, the long-term heatup of the suppression pool following a LOCA or a transient is governed by the ability of the RHR system to remove decay heat. Because the decay heat depends on the initial reactor power level, the long-term containment response is affected by EPU. The containment pressure and temperature responses have been reanalyzed, as described in Section 4.1.1, to demonstrate the Browns Ferry acceptability for operation at EPU RTP.

The analyses were performed in accordance with Regulatory Guide 1.49 and ELTR1 (Reference 1) using GE codes and models (References 2 through 5). The GE methods have been reviewed and approved by the NRC (References 6 and 7). Confirmatory calculations with the SHEX code and the NRC-accepted HXSIZ code show a difference of less than 1°F in peak suppression pool temperature between the two codes. Therefore, the use of the SHEX code for Browns Ferry complies with the NRC requirements for use in the EPU analyses presented in Reference 8.

The major difference between the current UFSAR and EPU containment analyses is service water temperature, which was increased from 92°F to 95°F for all analyses.

The effect of EPU on the containment dynamic loads due to a LOCA or MSRV discharge has also been evaluated as described in Section 4.1.2. These loads were previously defined generically during the Mark I Containment LTTIP as described in Reference 9 and accepted by the NRC per References 6 and 7. Plant-specific dynamic loads are also defined (Reference 10), and were accepted by the NRC in Reference 11. The evaluation of the LOCA containment dynamic loads is based primarily on the results of the short-term analysis described in Section 4.1.1.3. The MSRV discharge load evaluation is based on no changes in the MSRV opening setpoints for EPU conditions.

4.1.1 Containment Pressure and Temperature Response

Short-term and long-term containment analyses results are reported in the UFSAR. The short-term analysis is directed primarily at determining the drywell pressure response during the initial blowdown of the reactor vessel inventory to the containment following a large break inside the drywell. The long-term analysis is directed primarily at the suppression pool temperature response, considering the decay heat addition to the suppression pool. The effect of EPU on the events yielding the limiting containment pressure and temperature responses are provided below.

4.1.1.1 Long-Term Suppression Pool Temperature Response

Short-term and long-term containment analysis results are reported in the UFSAR. The long-term analysis is directed primarily at the pool temperature response, considering the decay heat addition to the pool.

(a) Bulk Pool Temperature

The long-term bulk pool temperature response with EPU was evaluated for the DBA LOCA. The analysis was performed at 102% of EPU RTP. Table 4-1 compares the calculated peak values for LOCA bulk pool temperature. The current analyses have been performed using the same RHR containment cooling capability used in the UFSAR Section 14.6.3.3.2.3 analysis (K = 223 BTU/sec-°F/HX), but with a higher service water temperature (95°F versus 92°F). The EPU analysis was performed using a realistic decay heat model (ANS/ANSI 5.1 with 2σ uncertainty), similar to the current UFSAR analysis. Benchmark calculations were made as requested by the NRC in Reference 8. The Browns Ferry calculated peak bulk suppression pool temperatures are provided in Table 4-1 for both 102% of CLTP and 102% of EPU RTP. This comparison shows that EPU results in an increase of 7.7°F in peak bulk suppression pool temperature, based on current methodology.

Based on the analysis and limit values shown in Table 4-1, the peak bulk pool temperature with EPU is acceptable from a structural design standpoint.

The containment response used for NPSH evaluations is calculated using Browns Ferry specific inputs to maximize suppression pool temperature and minimize containment pressure, similar to the DBA-LOCA analysis using the same methodology. The suppression pool temperature and corresponding wetwell pressure for the short-term and long-term NPSH containment analyses are used in the evaluation of the available NPSH for the CS and the RHR pumps. The results of that evaluation are provided in Section 4.2.5.

(b) Local Pool Temperature with MSRV Discharge

The local pool temperature limit for MSRV discharge is specified in NUREG-0783, because of concerns resulting from unstable condensation observed at high pool temperatures in plants without quenchers. The MSRV discharge quenchers at Browns Ferry are slightly below the elevation of the ECCS suction line penetration. The peak local suppression pool temperature at Browns Ferry has been evaluated for EPU and meets the NUREG-0783 criteria. Therefore, the peak local suppression pool temperature at Browns Ferry is acceptable for EPU conditions.

However, it is necessary to ensure that steam ingestion in the ECCS suction line is not of concern during steam MSRV discharge at high suppression pool temperature because the top of the ECCS suction strainers at Browns Ferry are located above the T-quenchers. Per Reference 12, TVA addressed ECCS suction separation. TVA evaluated the physical configuration of the suppression pool, MSRV T-Quenchers, and ECCS suction strainers utilizing the information contained in NEDO-30832 (Reference 13), the NRC SER and the associated Brookhaven report. Based on this evaluation, the ECCS suction piping would not ingest steam bubbles that could later collapse and induce water hammer loads. These conclusions remain valid for the EPU conditions.

4.1.1.2 Short-Term Gas Temperature Response

The drywell airspace temperature limit is specified in Table 4-1. This limit is based on a bounding analysis of the superheated gas temperature reached during the steam blowdown to the drywell during a LOCA. The changes in the reactor vessel conditions at EPU increase the expected peak drywell gas temperature following a LOCA by 1°F. Therefore, the drywell gas temperature response with EPU does not exceed the limit.

Short-term containment response analyses for DBA-LOCA demonstrate that operation at EPU RTP does not result in exceeding the containment design limits. These analyses cover the blowdown period when the maximum drywell airspace temperature occurs. The analyses were performed at 102% of EPU RTP, using the methods reviewed and accepted by the NRC during the Mark I Containment LTTIP. The calculated peak drywell airspace temperatures are provided in Table 4-1. Table 4-1 also shows the values from calculations at CLTP using the same methods. The total time that the drywell airspace temperature exceeds the containment structural design basis temperature of 281°F is less than one minute. This short duration is not sufficient for the average shell temperature to exceed the containment structural design temperature.

The wetwell gas space peak temperature response is calculated assuming thermal equilibrium between the pool and wetwell gas space for the short-term containment response. Table 4-1 shows that the calculated bulk pool temperature increases slightly at the EPU conditions. Therefore, the wetwell gas space increases by the same amount. The short-term wetwell gas space temperatures at the EPU conditions are below the suppression chamber the design temperatures. Therefore, the short-term wetwell gas temperature responses at EPU are acceptable.

4.1.1.3 Short-Term Containment Pressure Response

Short-term containment response analyses were performed for the limiting DBA LOCA, which assumes a double-ended guillotine break of a recirculation suction line, to demonstrate that EPU does not result in exceeding the containment design limits. The short-term analysis covers the blowdown period during which the maximum drywell pressures and differential pressures between the drywell and wetwell occur. These analyses were performed at 102% of EPU RTP, using methods reviewed and accepted by the NRC during the Mark I Containment LTTIP with the break flow calculated using a more detailed RPV model (Reference 5) previously approved by the NRC. The results of these short-term analyses are summarized in Table 4-1 for comparison to the drywell design pressure. As shown by these results, the maximum drywell pressure values at the EPU conditions are bounded by the UFSAR analysis value and by the design pressure.

4.1.2 Containment Dynamic Loads

4.1.2.1 Loss-of-Coolant Accident Loads

The LOCA containment dynamic loads analysis for EPU is based primarily on the short-term LOCA analyses. These analyses were performed as described in Section 4.1.1.3, using the Mark I Containment LTTIP method, except that the break flow was calculated using a more detailed RPV model (Reference 5). The application of this model to EPU containment evaluations is identified in ELTR1. These analyses provide calculated values for the controlling parameters for the dynamic loads throughout the blowdown. The key parameters are drywell and wetwell pressure, vent flow rates and suppression pool temperature. The LOCA dynamic loads for EPU include pool swell, CO, and chugging loads. For Mark I plants like the Browns Ferry units, the vent thrust loads are also evaluated.

The short-term containment response conditions with EPU are within the range of test conditions used to define the pool swell and CO loads for Browns Ferry. The peak drywell pressure from these analyses is given in Table 4-1. The long-term response conditions at EPU conditions when chugging would occur are within the conditions used to define the chugging loads. The vent thrust loads at EPU conditions are calculated to be less than the plant-specific values calculated during the Mark I Containment LTTIP. Therefore, the LOCA dynamic loads are not affected by EPU.

4.1.2.2 Main Steam Relief Valve Loads

The MSRV air-clearing loads include MSRVDL loads, suppression pool boundary pressure loads, and drag loads on submerged structures. These loads are influenced by MSRV opening setpoint pressure, the initial water leg in the MSRVDL, MSRVDL geometry, and suppression pool geometry. For the first MSRV actuations following an event involving RPV pressurization, the controlling parametric change introduced by EPU, which can affect the MSRV loads is an increase in MSRV opening setpoint pressure. However, this EPU does not include an increase in the MSRV opening setpoint pressures. EPU may reduce the time between subsequent MSRV actuations, which may affect the load definition for subsequent actuations.

The MSRV opening load values, which are the basis for the MSRVDL loads and the MSRV loads on the suppression pool boundary and submerged structures are not changed. The effect of EPU on the load definition for subsequent MSRV actuations has been evaluated. The load definition for subsequent MSRV actuations is not affected because the MSRVDL reflood height used for Browns Ferry is the maximum reflood height (Reference 10), which is controlled by the MSRVDL geometry and the MSRVDL vacuum breaker capacity. Because all these parameters, including the MSRV setpoints, do not change, loads due to subsequent MSRV actuations are not affected by EPU. Therefore, EPU does not affect the MSRV loads or loads definitions.

4.1.2.3 Subcompartment Pressurization

The annulus pressure load on the biological shield wall due to a postulated break in a 4-inch jet pump instrument line nozzle is evaluated at EPU conditions. The annulus pressure load (2.4 psid) evaluated in UFSAR Section 12.2.2.6 (at 102% of CLTP) remains bounding compared

to the 102% of EPU annulus pressure load of 2.3 psid for normal FW temperatures. For FFWTR at 102% of EPU conditions, the annulus pressure load is 2.6 psid. The biological shield wall and component designs remain adequate, because there is substantial margin to the structural design value of 19 psid.

4.1.3 Containment Isolation

The system designs for containment isolation are not affected by EPU. The capabilities of isolation actuation devices to perform during normal operations and under post-accident conditions have been determined to be acceptable. Therefore, the Browns Ferry containment isolation capabilities are not adversely affected by the EPU.

The AOV and SOV parameters (temperature, pressure, flow) were reviewed and no changes to the functional requirements of any AOV/SOV were identified as a result of operating at EPU conditions.

Operation at the EPU conditions is within the pressure and temperature capabilities of the AOVs and SOVs. Therefore, the AOVs and SOVs remain capable of performing their design basis function.

4.1.4 Generic Letter 89-10 Program

The MOV process parameters (temperature, pressure, flow) were reviewed and no significant changes to the functional requirements of the GL 89-10 MOVs were identified as a result of operating at EPU conditions.

Operation at the EPU conditions increases post-accident room temperatures (< 10°F) where the MOVs are located. Operation at the increased EPU conditions is within the pressure and ambient temperature capability of the GL 89-10 MOVs. Therefore, the GL 89-10 MOVs remain capable of performing their design basis functions.

4.1.5 Generic Letter 89-16

In response to Generic Letter 89-16, Browns Ferry installed a HWWV system. The current design of the HWWV was based on 1.05% of 3293 MWt (OLTP). Therefore, at the EPU RTP conditions, the existing HWWV exhausts a smaller percentage of RTP. Based on the as-built design, the HWWV would exhaust approximately 0.88% RTP at 3952 MWt (EPU RTP) and is designed to be operational during a SBO.

The primary objective of the hardened wetwell vent is to preclude primary containment failure due to overpressurization, given a loss of decay heat removal (TW sequence) event. Using the ANSI/ANS-5.1-1979 decay heat (nominal) curve, 0.88% RTP is reached at approximately 5.6 hours. From EPU conditions, the containment pressure at 5.6 hours is 46.4 psig, which is below the containment design pressure and primary containment pressure limit of 56 psig. At the EPU conditions, decay heat will be below the relieving capacity of the hardened wetwell vent before containment pressure reaches the design pressure limit, therefore, the existing HWWV meets the intent of Generic Letter 89-16 for EPU conditions.

4.1.6 Generic Letter 95-07

MOVs used as containment or HELB isolation valves have been reviewed for the effects of operations at EPU conditions, including thermal binding and pressure locking (Generic Letter 95-07). The operability of MOVs is documented as part of the plant GL 89-10 program.

4.1.7 Generic Letter 96-06

The Browns Ferry evaluations for Generic Letter 96-06, "*Assurance of Equipment Operability and Containment Integrity During Design-Basis Accident Conditions,*" were accomplished using the peak drywell temperature (336°F) for a MSLB inside containment. The equipment and containment remain within their design allowables for EPU conditions.

4.2 EMERGENCY CORE COOLING SYSTEMS

Each ECCS is discussed in the following subsections. The effect on the functional capability of each system due to EPU is addressed. The ECCS performance evaluation is contained in Section 4.3.

4.2.1 High Pressure Coolant Injection System

The HPCI system is designed to pump water into the reactor vessel over a wide range of operating pressures. The primary purpose of the HPCI is to maintain reactor vessel coolant inventory in the event of a small break LOCA that does not immediately depressurize the reactor vessel. In this event, the HPCI system maintains reactor water level and helps depressurize the reactor vessel. The adequacy of the HPCI system is demonstrated in Section 4.3.

[[

]] the HPCI pump and turbine remain within their allowable operating envelopes, the HPCI system is capable of delivering its design injection flow rate, and the turbine has the capacity to develop the required horsepower and speed. Therefore, the HPCI system is acceptable for EPU.

4.2.2 Low Pressure Coolant Injection

The LPCI mode of the RHR system is automatically initiated in the event of a LOCA. When operating in conjunction with other ECCS, the LPCI mode provides adequate core cooling for LOCA events.

The increase in decay heat due to EPU could increase the calculated PCT following a postulated LOCA by a small amount. The ECCS performance evaluation presented in Section 4.3 demonstrates that the existing LPCI mode performance capability, in conjunction with the other ECCS, is adequate to meet the post-LOCA core cooling requirement for EPU RTP conditions.
[[

]]

4.2.3 Core Spray System

The CS system is automatically initiated in the event of a LOCA. When operating in conjunction with other ECCS, the CS system provides adequate core cooling for LOCA events. There is no change in the reactor pressures at which the CS system is required to operate.

The increase in decay heat due to EPU could increase the calculated PCT following a postulated LOCA by a small amount. The ECCS performance evaluation presented in Section 4.3 demonstrates that the existing CS system performance capability, in conjunction with the other ECCS as required, is adequate to meet the post-LOCA core cooling requirement for the EPU conditions. [[

]]

4.2.4 Automatic Depressurization System

The ADS evaluation scope is provided in Section 5.6.8 of ELTR1.

The ADS uses MSRVs to reduce reactor pressure following a small break LOCA, when it is assumed that the high-pressure ECCS has failed. This function allows LPCI and CS to inject coolant into the vessel. Plant design requires a minimum flow capacity for the MSRVs and that ADS initiates following confirmatory signals and associated time delay(s). The required flow capacity and ability to initiate ADS on appropriate signals are not affected by EPU. The ADS initiation logic and ADS valve control [[ ]] are adequate for EPU conditions.

4.2.5 ECCS Net Positive Suction Head

Following a LOCA, the RHR and CS pumps operate to provide the required core and containment cooling. Adequate margin (NPSH available minus NPSH required) is required during this period to ensure the essential pump operation. The limiting NPSH conditions occur during either short-term or long-term post-LOCA pump operation and depend on the total pump flow rates, debris loading on the suction strainers, and suppression pool temperature.

TVA previously requested containment overpressure credit for Browns Ferry Units 2 and 3 (Reference 16). In Reference 16, TVA indicated that the need for containment overpressure credit in the short term was based on RHR requirements, and in the long term was based on CS requirements. The pre-EPU analysis indicates that up to 3 psi of overpressure credit (considering whole number value) is required for the short-term case for RHR pump operation to maintain adequate NPSH. One (1) psi of overpressure credit is currently required and approved for the long-term case for CS pump adequate NPSH.

For both the pre-EPU and the EPU analyses, a maximized suppression pool temperature and a minimized containment pressure were assumed. EPU RTP operation increases the reactor decay

heat, which increases the heat addition to the suppression pool following a LOCA. Therefore, changes in vapor pressure corresponding to the increase in suppression pool temperatures affect the NPSH margin. After 10 minutes, operation of the RHR pumps for containment cooling in the containment spray mode with continued operation of a CS loop for ECCS injection is also assumed.

The NPSH margins were calculated based on conservatively assuming RHR maximum flow rates and CS design flow rates during the short-term, and RHR and CS design flow rates during the long-term. The system flow rates for the short-term case are 42,000 gpm total RHR flow and 12,500 gpm total CS flow. The system flow rates for the long-term case are 13,000 gpm total RHR flow and 6,250 gpm total CS flow. The methodology used to determine the amount of debris generated and transported to the ECCS strainers is generally based on NEDO-32686, the BWROG Utility Resolution Guidance for ECCS Suction Strainer Blockage. The minimum quantity of paint chips recommended by this guidance is 85 lbs. Browns Ferry has identified a maximum surface area of 157ft^2 for unqualified coatings within the primary containment which represents an additional 18 lbs. Therefore, a total of 103 lbs of strainer paint debris was used for sizing the strainers. This quantity did not change with EPU. Because the ECCS pump flow rates were unchanged for EPU, strainer approach velocities were not affected. Therefore, the debris loading on the suction strainers for EPU is the same as the pre-EPU condition. The assumptions in the ECCS NPSH calculations for friction loss, static head, strainer loss, flow, and NPSH required have not been changed since the issuance of the amendment related to NRC GL 97-04 (Reference 15).

The short-term EPU NPSH analysis (0 to 600 seconds) indicates that with a containment overpressure (suppression chamber air space pressure) credit of 3 psi the RHR pumps have adequate NPSH margin. The short-term analysis also indicates that greater than 3 psi of overpressure is available from the beginning of the event until approximately 350 seconds. From 350 seconds to 600 seconds, the short-term analysis (using inputs that conservatively maximized suppression pool temperature and minimized containment pressure) indicates an available overpressure of less than 3 psig. For the brief time that the short-term analysis indicates that less than 3 psi is available, the RHR pumps only require 2.5 psi. In addition, historical plant testing has demonstrated that the RHR pumps are capable of operating for short periods of time at NPSH values less than (approximately 9 feet) the manufacturer's required NPSH without degradation or substantial loss of flow. Therefore, RHR pump operation is not adversely affected by containment pressure less than 3 psi. This was previously presented for pre-EPU conditions and approved by the NRC in Reference 15. In Reference 15, the NRC stated that "the use of 3 psi of containment overpressure above the initial airspace pressure is acceptable for the first 10 minutes after a LOCA." Reference 15 also concludes that CS pump operation is not affected by this lower containment overpressure during the short term.

The long-term EPU NPSH analysis (0 until the end of the event) indicates that up to 2 psi (considering whole number value) containment overpressure credit is required when the suppression pool temperature exceeds 181°F to obtain adequate NPSH margin for the long-term operation of the CS pumps. This is an increase from the 1 psi of overpressure credit currently approved for pre-EPU conditions. The long-term analysis demonstrates that greater than 4 psi of containment overpressure is available during this period.

Tables 4-2 and 4-3 provide the results of the short-term and long-term containment response. Table 4-4 provides the suppression pool temperature and the required containment overpressure to maintain NPSH margins during the DBA LOCA for EPU conditions.

Based on the above, Browns Ferry is requesting approval of 3 psi of overpressure credit to meet both the short-term and long-term NPSH requirements. A single containment overpressure credit value is requested both to account for potential future contingencies and to provide consistency between the inputs to the short- and long-term analyses. Other means to increase the NPSH margin were found unfeasible.

One RHR pump is required to operate during either the SBO or an Appendix R fire event. EPU RTP operation increases the reactor decay heat, which increases the heat addition to the suppression pool following these events (see Sections 6.7.1 and 9.3.2). As a result, the long-term peak suppression pool water temperature and peak containment pressure increase. The NPSH evaluation at these peak pool temperatures shows adequate NPSH margins during the SBO and the Appendix R events with containment overpressures of 1 psi and 10 psi, respectively.

The HPCI system primary function is to provide reactor inventory makeup water and assist in depressurizing the reactor during an intermediate or small break LOCA. The HPCI system can operate with suction from the suppression pool at a temperature below 140°F during the first 10 minutes after initiation of the event. EPU has an insignificant effect on the time for the suppression pool temperature to reach 140°F. If the HPCI pump operates beyond the first 10 minutes following the event, the reactor operator may terminate HPCI pump operation when the suppression pool temperature reaches 140°F. The HPCI pump NPSH margin remains adequate as long as the suppression pool temperature does not exceed 140°F during HPCI operation.

HPCI system operation is credited during ATWS, Appendix R, and SBO events. The suppression pool temperature does not affect the NPSH margin, because the HPCI pump takes suction from the CST during these events.

4.3 EMERGENCY CORE COOLING SYSTEM PERFORMANCE

The Browns Ferry ECCS for each unit is designed to provide protection against postulated LOCAs caused by ruptures in the primary system piping, and the ECCS performance characteristics do not change for EPU. The ECCS-LOCA performance analysis demonstrates that 10 CFR 50.46 requirements continue to be met following EPU operating conditions.

[[

]]

The EPU effect on PCT for small recirculation line breaks is larger than the EPU effect on PCT for large line breaks. The increased decay heat associated with EPU results in a longer ADS blowdown time leading to a later ECCS system injection and a higher PCT for the small break LOCA. As a result, the limiting LOCA case that defines the Browns Ferry Licensing Basis PCT at EPU for GE14 fuel is a small recirculation discharge line break with Battery failure.

The effects on compliance with the other acceptance criteria of 10 CFR 50.46 for the limiting large and small breaks are evaluated for the Browns Ferry EPU. For power uprates, there is a negligible effect on compliance with the other acceptance criteria of 10 CFR 50.46 (local cladding oxidation, core-wide metal-water reaction, coolable geometry and long-term cooling). The local cladding oxidation and core-wide metal-water reaction were calculated and determined to be within the 10 CFR 50.46 acceptance criteria. Coolable geometry and long-term cooling have been dispositioned generically for BWRs. These generic dispositions are not affected by EPU.

The Licensing Basis PCT is determined based on the calculated Appendix K PCT at rated core flow with an adder to account for uncertainties. For the EPU, the GE13 Licensing Basis PCT is 1780°F at rated core flow. The comparable GE13 Licensing Basis PCT for the CLTP conditions is 1810°F at rated core flow. For the EPU, the GE14 Licensing Basis PCT is 1830°F at rated core flow. The comparable GE14 Licensing Basis PCT for the CLTP conditions is 1760°F at rated core flow. At EPU conditions, the limiting break size is the large break for GE13 and the 0.06 ft^2 small break for GE14. The results of these analyses are provided in Table 4-5. The changes in PCT are small when compared to the PCT margin to the 10 CFR 50.46 licensing limit of 2200°F.

Reference 17 provides justification for the elimination of the 1600°F Upper Bound PCT limit and generic justification that the Licensing Basis PCT will be conservative with respect to the Upper Bound PCT. The NRC SER in Reference 18 accepted this position by noting that because plant-specific Upper Bound PCT calculations have been performed for all plants, other means may be used to demonstrate compliance with the original SER limitations. These other means are acceptable provided there are no significant changes to a plant's configuration that would invalidate the existing Upper Bound PCT calculations. The changes in magnitude of the PCT due to EPU demonstrate that this plant configuration does not invalidate the existing Upper Bound PCT calculation. After the implementation of EPU, the Licensing Basis PCT will continue to bound the Upper Bound PCT. Therefore, the Licensing Basis PCT is sufficiently conservative.

For SLO, a multiplier is applied to the Two-Loop Operation PLHGR and MAPLHGR limits. This multiplier insures that the Two-loop Upper Bound PCT is also bounding for the SLO case. The SLO PCT values remain well below the 2200°F limit.

4.4 MAIN CONTROL ROOM ATMOSPHERE CONTROL SYSTEM

The CREVS processes outside air needed to provide ventilation and pressurization of the CRHZ during accident conditions. The CREVS units are started and the CRHZ is isolated on receipt of

a primary containment isolation signal or high radiation signal in the Control Building intake duct. When the CRHZ is isolated, a fixed amount of outside air is filtered.

TVA has submitted a request for an amendment to the plant-operating license that supports the full scope implementation of an AST for Units 1, 2 and 3 (Reference 17). The TVA request includes the radiological dose consequences for the design bases accidents and includes the CREVS operational parameters at EPU conditions.

4.5 STANDBY GAS TREATMENT SYSTEM

The SGTS is designed to maintain secondary containment at a negative pressure and to filter the exhaust air for removal of fission products potentially present during abnormal conditions. By limiting the release of airborne particulates and halogens, the SGTS limits off-site and control room dose following a postulated design basis accident.

TVA has submitted a request for an amendment to the plant-operating license that supports the full scope implementation of an AST for Units 1, 2, and 3 (Reference 19). The TVA request includes the radiological dose consequences for the design bases accidents and includes the SGTS operational parameters at EPU conditions.

4.6 MAIN STEAM ISOLATION VALVE LEAKAGE CONTROL SYSTEM

Browns Ferry does not use a MSIV-LCS.

4.7 POST-LOCA COMBUSTIBLE GAS CONTROL

The Combustible Gas Control System is designed to maintain the post-LOCA concentration of oxygen or hydrogen in the containment atmosphere below the lower flammability limit.

As a result of EPU, the post-LOCA production of hydrogen and oxygen by radiolysis increases proportionally with power level. This increase in radiolysis has an effect on the time available to start the system before reaching procedurally controlled limits, but does not affect the ability of the system to maintain oxygen below the lower flammability limit of 5% by volume as specified in Safety Guide 7. The required start time for the CAD system decreases from 42 hours to 32 hours as a result of EPU. This reduction in required CAD initiation time does not affect the ability of the operators to respond to the postulated LOCA. The integrated hydrogen production rates from radiolysis and metal-water reaction are shown in Figure 4-1. Uncontrolled hydrogen and oxygen concentrations in the drywell and wetwell are shown in Figure 4-2 and the Drywell Pressure Response to CAD Operation without Venting is shown in Figure 4-3.

The TS require sufficient on-site storage of nitrogen in each of the two 4000-gallon storage tanks to maintain containment oxygen below 5% during the 7-day period following the postulated LOCA. For CLTP, this requirement is satisfied by maintaining a minimum of 2500 gallons of liquid nitrogen in each tank, equivalent to a volume of 191,000 scf (20°C and 14.7 psia) per tank. As a result of increased production rate of radiolytic gas following EPU operation, the required 7-day volume of nitrogen increases from 155,000 scf to 197,000 scf, which exceeds the available 191,000 scf supply required by the TS. An evaluation was performed to determine the amount

needed to maintain a 4-day supply following the postulated LOCA. This resulted in a nitrogen volume of 104,834 scf that is less than the available 191,000 scf supply required by the plant TS. The TS Bases liquid nitrogen 7-day requirement is conservative, because additional liquid nitrogen can be delivered within one day or less. Two liquid nitrogen distribution facilities are located within 1-day travel distance from Browns Ferry. Each facility is capable of delivering 5000 gallons or more of liquid nitrogen to Browns Ferry with less than 4 days notice. The historical average delivery time is 1 day. The TS are not changed, however, the TS Bases will be revised to a 4-day nitrogen storage requirement to accommodate EPU operations. The CAD system nitrogen volume requirements are shown in Figure 4-4.

4.8 REFERENCES

1. GE Nuclear Energy, "Generic Guidelines for General Electric Boiling Water Reactor Extended Power Uprate," Licensing Topical Reports NEDC-32424P-A, Class III (Proprietary), February 1999; and NEDO-32424, Class I (Non-proprietary), April 1995.
2. GE Nuclear Energy, "The GE Pressure Suppression Containment System Analytical Model," NEDM-10320, March 1971.
3. GE Nuclear Energy, "The General Electric Mark III Pressure Suppression Containment System Analytical Model," NEDO-20533, June 1974.
4. GE Nuclear Energy, "Maximum Discharge of Liquid-Vapor Mixtures from Vessels," NEDO-21052, September 1975.
5. GE Nuclear Energy, "General Electric Model for LOCA Analysis In Accordance With 10 CFR 50 Appendix K," NEDE-20566-P-A, September 1986.
6. NUREG-0800, U.S. Nuclear Regulatory Commission, Standard Review Plan, Section 6.2.1.1.C, "Pressure - Suppression Type BWR Containments," Revision 6, August 1984.
7. NUREG-0661, "Mark I Containment Long-Term Program Safety Evaluation Report," July 1980.
8. Letter to Gary L. Sozzi (GE) from Ashok Thadani (NRC) on the Use of the SHEX Computer Program and ANSI/ANS 5.1-1979 Decay Heat Source Term for Containment Long-Term Pressure and Temperature Analysis, July 13, 1993.
9. GE Nuclear Energy, "Mark I Containment Program Load Definition Report," NEDO-21888, Revision 2, November 1981.
10. BFN Report CEB-83-34, "Browns Ferry Nuclear Plant Torus Integrity Long-Term Program Plant Unique Analysis Report", Rev. 2, dated 12/10/1984
11. Letter from USNRC to H. G. Paris, TVA, entitled "Mark I Containment Program - Browns Ferry Nuclear Plant Units 1, 2 and 3," dated May 6, 1985 (A02 850513 002).
12. TVA Letter, R08 991201 679, from T. E. Abney to USNRC, "Browns Ferry Nuclear Plant (BFN) - Unit 2 and 3, Corrected Information for Technical Specification Change Request TS-384, Power Uprate - (TAC NOS M99711 and M99712)," dated December 1, 1999.

13. GE Nuclear Energy, "Elimination of Limit on Local Suppression Pool Temperature for SRV Discharge with Quenchers," NEDO-30832, Class I, December 1984.

14. GE Nuclear Energy, "Generic Evaluations of General Electric Boiling Water Reactor Extended Power Uprate," Licensing Topical Reports NEDC-32523P-A, Class III, February 2000; NEDC-32523P-A, Supplement 1 Volume I, February 1999; and Supplement 1 Volume II, April 1999.

15. NRC Letter, "Browns Ferry Nuclear Plants, Units 2 and 3 – Issuance of Amendments Regarding Crediting of Containment Overpressure for Net Positive Suction Head Calculations for Emergency Core Cooling Pumps (TAC Nos. MA3492 and MA3493)," September 3, 1999.

16. TVA Letter, "Browns Ferry Nuclear Plant (BFN) - Units 2 And 3 – License Amendment Regarding Use of Containment Overpressure for Emergency Core Cooling System (ECCS) Pump Net Positive Suction Head (NPSH) Analyses," September 4, 1998.

17. GE Nuclear Energy, "GESTR-LOCA and SAFER Models For Evaluation of Loss-of-Coolant Accident, Additional Information For Upper Bound PCT Calculation," NEDE-23785P-A Volume III Supplement 1, Revision 1, March 2002.

18. Stuart A. Richards (NRC) to James F. Klapproth (GENE), Review of NEDE-23785P, Vol. III, Supplement 1, Revision 1, "GESTR-LOCA and SAFER Models for Evaluation of Loss-of-Coolant Accident Volume III, Supplement 1, Additional Information for Upper Bound PCT Calculation," (TAC No. MB2774), February 1, 2002.

19. TVA Letter, "Browns Ferry Nuclear Plant (BFN) - Units 1, 2, and 3 - License Amendment - Alternative Source Term," dated July 31, 2002, R08 020731 649, including Tech. Spec. No. 405 (TVA-BFN-TS-405).

Table 4-1
Browns Ferry Containment Performance Results

	Current Rated Power		EPU	Limit
	UFSAR	Current Method[1]		
Parameter				
Peak Drywell Pressure (psig)	50.6	47.7[3]	48.5[3]	56
Peak Drywell Temperature (°F)[2]	297.0	294.3[3]	295.2[3]	340/281
Peak Bulk Pool Temperature (°F)	177.0	179.6[4]	187.3[4]	281
Peak Wetwell Pressure (psig)	36.3	29.9	30.5	56

1. The Current Rated Power, Current Method analysis uses the EPU Power analysis method with CLTP inputs.
2. The acceptance limit for drywell airspace temperature is 340°F, while the shell design value is 281°F. The listed peak values are for airspace temperature.
3. Bounding mass and energy release data points were selected for input to M3CPT that more closely match the LAMB output for the EPU Analyses cases as compared to the previous power uprate. This technique results in lower mass and energy release to the drywell, which produces a lower peak drywell pressure and temperature at the same power level.
4. Service water temperature was increased from 92°F to 95°F.

Table 4-2
Browns Ferry Short-Term Containment Input to NPSH Analysis

[illegible]	[illegible]	[illegible]
0	14.4	95
54.34	36.73	125.9
101.31	37.98	136.4
151.47	29.67	139.0
201.84	22.73	143.1
304.94	17.95	148.3
351.75	17.23	149.9
399.94	16.92	151.2
500.87	16.81	153.4
600.12	16.81	155.4

Table 4-3
Browns Ferry Long-Term Containment Input to NPSH analysis

[illegible]	[illegible] (psia)	[illegible]
0	14.4	95
99.63	38.45	141.0
197.82	36.34	142.6
297.76	34.35	143.7
408	31.00	146.2
607	24.43	152.8
4,134	19.90	175.8
7,105	20.69	181.9
14,682	20.99	186.6
37,426	20.05	181.9
50,180	19.27	176.7

Table 4-4
Browns Ferry EPU DBA-LOCA NPSH Margins and Containment Overpressure Credit

[illegible]	[illegible]	[illegible]	[illegible]	[illegible]	[illegible]
600	155.4	2.46	0	6.75	Short-term analysis. Overpressure required to meet RHR NPSH requirements
601	152.4	0	12.95	6.55	Long-term analysis
4,150	175.83	0	6.32	0	Greater than 0 psi of overpressure required for long-term for CS pumps
7,090	181.85	1	6.32	0	Greater than 1 psi of overpressure required for long-term for CS pumps
14,700	186.6	1.90	6.32	0	Peak Suppression Pool temperature
37,500	181.85	1	6.32	0	Less than 1 psi of overpressure required for long-term for CS pumps

Table 4-5
Browns Ferry ECCS Performance Analysis Results

Parameter	CLTP	EPU	10 CFR 50.46 Limit
Method	SAFER/GESTR	SAFER/GESTR	
Power	105% OLTP	120% OLTP	
1. Licensing Basis Peak Clad Temperature, (PCT) °F	< 1810 (GE13)(1) < 1760 (GE14)(1)	< 1780 (GE13) < 1830 (GE14)	≤ 2200
2. Cladding Oxidation, % Original Clad Thickness	< 2.0	< 3.0	≤ 17
3. Hydrogen Generation (Core wide Metal-Water Reaction) %	< 0.1	< 0.1	≤ 1.0
4. Coolable Geometry	OK	OK	Meet 1 and 2, above
5. Core Long Term Cooling	OK	OK	Core flooded to TAF or Core flooded to jet pump suction elevation and at least one CS system is operating at rated flow.

(1) An update of the Licensing Basis PCT at 105% OLTP was calculated for the EPU analysis. This allows for comparison with the EPU Licensing Basis PCT results.

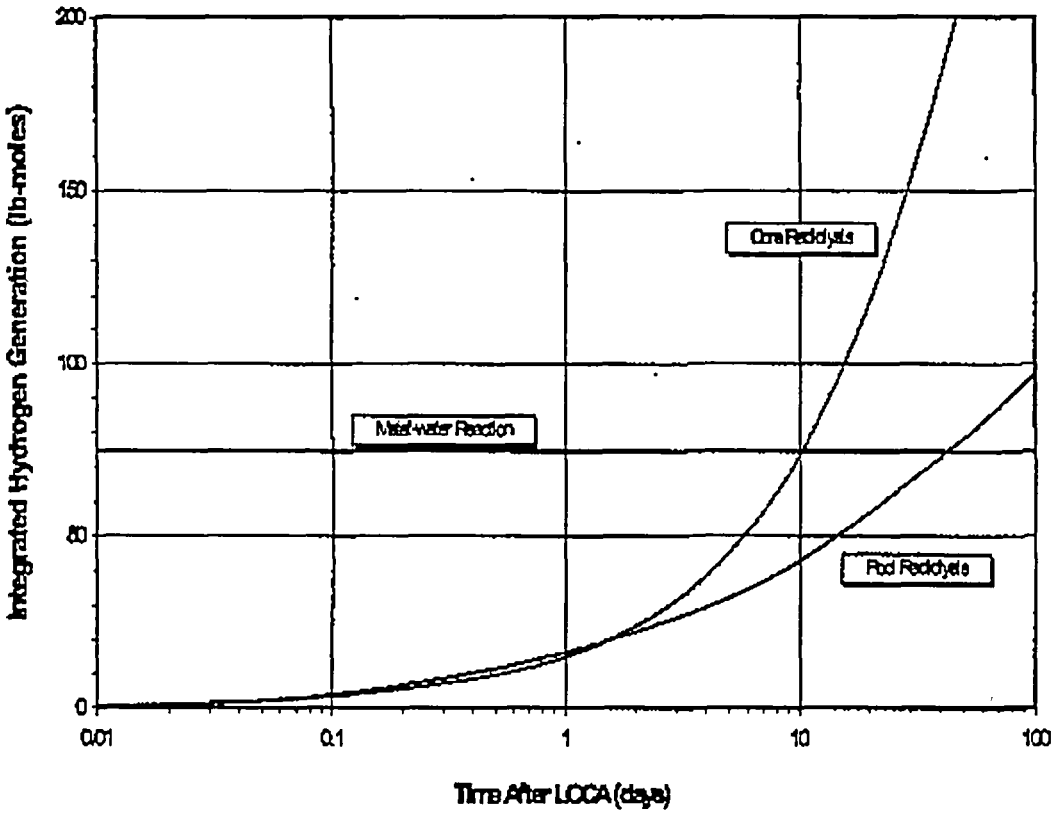

Figure 4-1
Browns Ferry Time-integrated Containment Hydrogen Generation

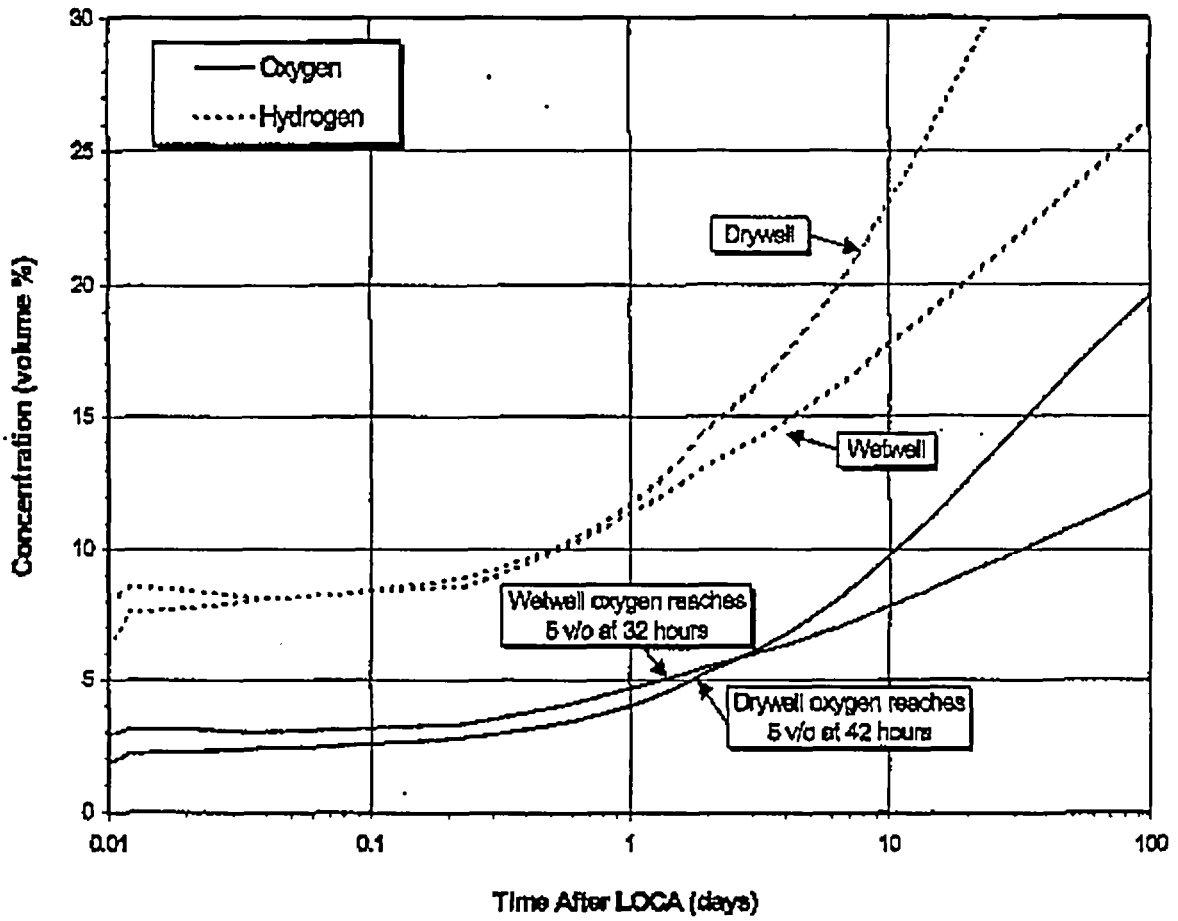

Figure 4-2
Browns Ferry Uncontrolled H_2 and O_2 Concentrations in Drywell and Wetwell

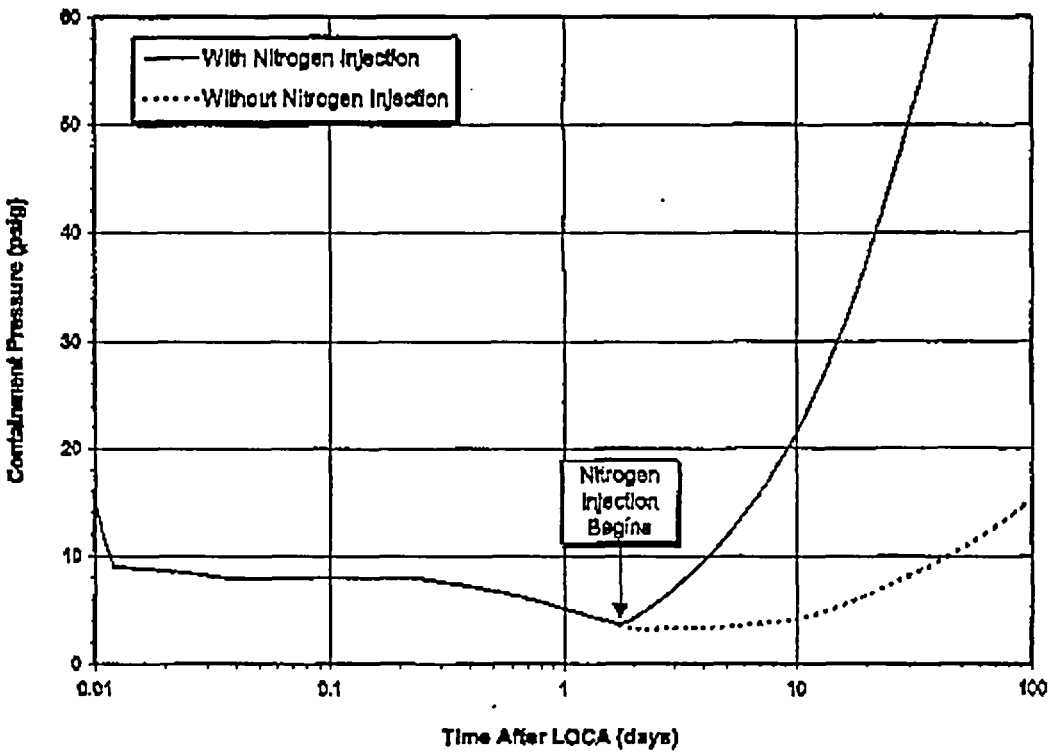

Figure 4-3
Browns Ferry Drywell Pressure Response to CAD Operation without Venting

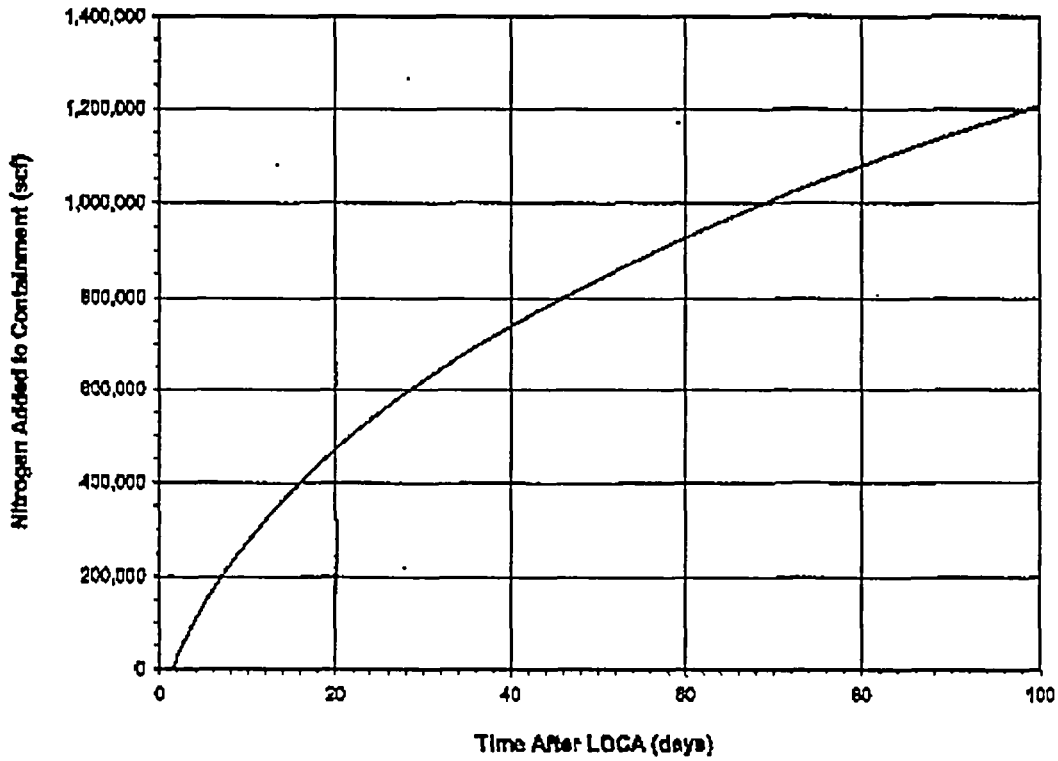

Figure 4-4
Browns Ferry CAD System Nitrogen Volume Requirement

5. INSTRUMENTATION AND CONTROL

The safety-related and major (non-safety) process monitoring instruments, controls and trips (analytical limits for setpoints) that could be affected by the EPU are addressed below.

The following evaluations are based on the NRC approved guidelines in Appendix F of BLTR1 (Reference 1).

5.1 NSSS MONITORING AND CONTROL SYSTEMS

The instruments and controls that directly interact with or control the reactor are usually considered within the NSSS. The NSSS process variables, instrument setpoints and Regulatory Guide 1.97 instrumentation that could be affected by the EPU were evaluated. As part of the EPU implementation, the NRC approved TVA setpoint methodology (Reference 2) is used to generate the allowable values and (nominal trip) setpoints related to the analytical limit changes shown in Table 5-1.

The following summarizes the results of the NSSS evaluations.

5.1.1 Control Systems Evaluation

Changes in process variables and their effects on instrument setpoints were evaluated for the EPU operation to determine any related changes. Process variable changes are implemented through changes in plant procedures.

TS instrument AVs and/or setpoints are those sensed variables, which initiate protective actions. The determination of instrument AVs and setpoints is based on plant operating experience and the conservative ALs used in specific licensing safety analyses. The settings are selected with sufficient margin to preclude inadvertent initiation of the protective action, while assuring that adequate operating margin is maintained between the system settings and the actual limits.

Increases in the core thermal power and steam flow affect some instrument setpoints, as described in Section 5.3. These setpoints were adjusted to maintain comparable differences between system settings and actual limits, and were reviewed to assure that adequate operational flexibility and necessary safety functions are maintained at the EPU RTP level.

5.1.2 Neutron Monitoring System

The APRM power signals are rescaled to the EPU RTP level, such that the indications read 100% at the new licensed power level.

EPU implementation has little effect on the IRM overlap with the SRM and the APRMs. Using normal plant surveillance procedures, the IRMs may be adjusted, as required, so that overlap with the SRMs and APRMs remains adequate. No change is needed in the APRM downscale setting.

At EPU RTP, the average flux experienced by the detectors increases due to the average power increase in the core. The maximum flux experienced by an LPRM remains approximately the same because the peak bundle powers do not appreciably increase. Due to the increase in neutron flux experienced by the LPRMs and TIPs, the neutronic life of the LPRM detectors may be reduced and

radiation levels of the TIPs may be increased. LPRMs are designed as replaceable components. The LPRM accuracy at the increased flux is within specified limits, and LPRM lifetime is an operational consideration that is handled by routine replacement. TIPs are stored in shielded rooms. A small increase in radiation levels is accommodated by the radiation protection program for normal plant operation.

The increase in power level at the same APRM reference level results in increased flux at the LPRMs that are used as inputs to the RBM. The RBM instrumentation is referenced to an APRM channel. Because the APRM has been rescaled, there is only a small effect on the RBM performance due to the LPRM performance at the higher average local flux. The change in performance does not have a significant effect on the overall RBM performance.

The Neutron Monitoring Systems installed at Browns Ferry are in accordance with the requirements established by the GE design specifications.

5.1.3 Rod Worth Minimizer

The RWM is a normal operating system that does not perform a safety-related function. The function of the RWM is to support the operator by enforcing rod patterns until reactor power has reached appropriate levels. [[ ]] The power-dependent instrument setpoints for the RWM are included in the TS (see Section 5.3.12).

[[

]]

5.2 BOP MONITORING AND CONTROL SYSTEMS

Operation of the plant at the EPU RTP level has minimal effect on the BOP system instrumentation and control devices. Based on the EPU operating conditions for the power conversion and auxiliary systems, most process control values and instrumentation have sufficient range/adjustment capability for use at the expected EPU conditions. However, some (non-safety) modifications may be needed to the power conversion systems to obtain full EPU RTP.

5.2.1 Pressure Control System

The PCS is a normal operating system that provides fast and stable responses to system disturbances related to steam pressure and flow changes so that reactor pressure is controlled within its normal operating range. This system does not perform a safety function. Pressure control operational testing is included in the EPU implementation plan as described in Section 10.4 to ensure that adequate turbine control valve pressure control and flow margin is available. [[ ]]

5.2.1.1 EHC Turbine Control System

The turbine EHC system was reviewed for the increase in core thermal power and the associated increase in rated steam flow. The control systems are expected to perform normally for EPU RTP operation.

No modifications to the turbine control valves or the turbine bypass valves are required for operation at the EPU conditions. Confirmation testing will be performed during power ascension (see Section 10.4).

5.2.1.2 Turbine Steam Bypass System

The Turbine Steam Bypass System is a normal operating system that is used to bypass excessive steam flow. The bypass flow capacity is included in some AOO evaluations (Section 9.1). These evaluations demonstrate the adequacy of the bypass system. Some of the limiting events in the reload analyses take credit for the availability of the bypass system. The reload analyses are used to establish the core operating limits.

5.2.2 Feedwater Control System

The FW control system controls reactor water level during normal operations. (The capacity of the FW pumps to adequately support EPU RTP operation is discussed in Section 7.4.) The minimum excess flow capacity requirement for adequate reactor water level control is approximately 5% of the operating point flow rate. The control signal range is capable of accessing as much of the flow as needed. Therefore, the capacity is sufficient for acceptable control.

The control system itself is adjusted to provide acceptable operating response on the basis of unit behavior. It will be set up to cover the current power range using startup and periodic testing. An expansion of the steam flow signal range (part of the three-element control mode) is planned to ensure full control near the EPU RTP event with one MSIV closed. No changes in the operating water level or water level trip setpoints are required for the EPU; therefore, margin for trip avoidance is maintained. For EPU, the FW flow control system device settings have the sufficient adjustment ranges to ensure satisfactory operation. However, this will be confirmed by performing unit tests during the power ascension to the EPU conditions (Section 10.4). [[

]]

Failure of this system is evaluated [[ ]] with the FW controller failure-maximum demand event. An LOFW transient event can be caused by downscale failure of the controls. The LOFW event is discussed in Section 9.1.3.

5.2.3 Leak Detection System

The only effect on the LDS due to EPU is a slight increase in the FW temperature and steam flow. [[

]] The increased FW temperature results in a small

increase in the MS tunnel temperature (< 1°F). [[

]] MSL high flow is discussed in Section 5.3.4.

5.3 INSTRUMENT SETPOINTS

TS instrument AVs and their associated NTSPs are provided for those sensed variables that initiate protective actions and are generally associated with the safety analysis. TS AVs are highly dependent on the results of the safety analyses. The safety analysis generally establishes the ALs. The determination of the TS AVs and the NTSPs includes consideration of measurement uncertainties and is derived from the ALs. The settings are selected with sufficient margin to minimize inadvertent initiation of the protective action, while assuring that adequate operating margin is maintained between the system settings and the actual limits. There is margin in the safety analysis process that is considered in establishing the setpoint process used to establish the TS AVs and setpoints.

Increases in the core thermal power, FW flow, and steam flow affect some instrument setpoints. These setpoints are adjusted to maintain comparable differences between system settings and actual limits, and are reviewed to ensure that adequate operational flexibility and necessary safety functions are maintained at the EPU RTP level. Where the power increase results in new instruments being employed, an appropriate setpoint calculation is performed and TS changes are implemented, as required.

All TS instruments were evaluated for effects from EPU using the existing TVA setpoint methodology (Reference 2). This methodology is consistent with NRC Regulatory Guide 1.105, and has been previously reviewed by the NRC. This evaluation included a review of environmental (i.e., radiation and temperature) effects, process (i.e., measured parameter) effects and analytical (i.e., AL and margins) effects on the subject instruments.

The instrument function AL is the value used in the safety analyses to demonstrate acceptable nuclear safety system performance is maintained. The AV and NTSP are then chosen/calculated such that the instrument functions before reaching the AL under the worst-case environmental/event conditions. Instrument NTSPs account for measurable instrument characteristics (e.g., drift, accuracy, repeatability).

Table 5-1 summarizes the current and EPU ALs.

[[

]]

5.3.1 High-Pressure Scram

During a pressure increase transient that is not terminated by a direct scram or high neutron flux scram, the high-pressure scram terminates the event. The reactor vessel high-pressure scram signal settings are maintained slightly above the reactor vessel maximum normal operating pressure and below the specified AL. The setting permits normal operation without spurious scram, yet provides adequate margin to the maximum allowable reactor vessel pressure. [[

]]

5.3.2 High-Pressure ATWS Recirculation Pump Trip

The ATWS-RPT trips the recirculation pumps during plant transients associated with increases in reactor vessel dome pressure and/or low reactor water level. The ATWS-RPT is designed to provide negative reactivity by reducing core flow during the initial part of an ATWS. The ATWS-RPT high-pressure setpoint is a significant factor in the analysis of the peak reactor vessel pressure from an ATWS event. The ATWS-RPT low reactor water level setpoint is not a significant factor for the limiting ATWS events. The low reactor water level setpoint is not affected by EPU.

The major consideration for the ATWS-RPT high-pressure setpoint is an increase in the calculated peak vessel pressure during a hypothetical ATWS event, because of the higher initial power. The current ATWS-RPT high-pressure setpoint was included in the ATWS evaluation discussed in Section 9.3.1. This evaluation concludes that the calculated peak vessel pressure remains below its allowable limit for an ATWS event. Therefore, the current ATWS-RPT high-pressure setpoint is acceptable for EPU.

5.3.3 Main Steam Relief Valve

Because there is no increase in reactor operating dome pressure, the setpoints for the MSRVs are not increased. Thus ALs for setpoints do not need to be updated. The current values were used in the overpressure protection and transient analyses discussed in Sections 3.2 and 9.1.

5.3.4 Main Steam High Flow Isolation

The MSL high flow isolation is used to initiate the isolation of the Group 1 primary containment isolation valves. The only safety analysis event that credits this trip is the MSLB accident. For this accident, there is a diverse trip from high area temperature. There is sufficient margin to choke flow, so the AL for EPU is maintained at the current 144 percent of rated steam flow in each MSL.

No new instrumentation is required because the existing instrumentation has the required upper range limit to re-span the instrument loops for the higher steam flow condition. A new setpoint is calculated using the methodology noted in Section 5.3, and no TS change is required. This will ensure that sufficient margin to the trip setpoint exists to allow for normal plant testing of the MSIVs and turbine stop and control valves. This approach is consistent with Section F.4.2.5 of ELTR1.

5.3.5 Neutron Monitoring System

The AL for the APRM Neutron Flux Scram remains the same in terms of percent power, and thus, the percent power values for the TS AV and the NTSP do not change.

[[

]]

For DLO, the clamped AL, AV, and NTSP retain the MELLLA domain values in percent RTP.

The SLO AL for the fixed (clamped) APRM scram is evaluated to be the same as for DLO.

A new nominal trip setpoint and AV are calculated for the APRM setdown using Browns Ferry current design basis methodology. This methodology is based on GE NEDC-31336, which has been evaluated and accepted by the NRC (Reference 3).

The severity of rod withdrawal error during power operation event is dependent upon the RBM rod block setpoint. This setpoint is only applicable to a control rod withdrawal error. [[ ]] The flow biased RBM is clamped based on its power value at 100% core flow and 100% power. The RBM setpoints are based on the cycle-specific RWE transient analysis, and thus, are confirmed or revised (as needed) via the reload core design, review and approval process.

The ALs for the above trips are provided in Table 5-1

5.3.6 Main Steam Line High Radiation Scram

Browns Ferry does not have a MSL radiation level scram.

5.3.7 Low Steam Line Pressure MSIV Closure (RUN Mode)

The purpose of this setpoint is to initiate MSIV closure on low steam line pressure when the reactor is in the RUN mode. This setpoint is not changed for EPU, as discussed in Section F.4.2.7 of ELTR1.

5.3.8 Reactor Water Level Instruments

The reactor water level trip values used in the safety analyses do not require changing as a result of EPU.

5.3.9 Main Steam Tunnel High Temperature Isolation

At EPU conditions, the increase in ambient temperature is not significant (< 1°F), and no change to the MSL Tunnel High Temperature Isolation setpoint is required.

5.3.10 Low Condenser Vacuum

Browns Ferry does not have a low condenser vacuum MSIV isolation or scram trip.

5.3.11 TSV Closure and TCV Fast Closure Scram Bypass

The TSV closure and TCV fast closure scram bypass allows these scrams to be bypassed, when reactor power is sufficiently low, such that the scram function is not needed to mitigate a T/G trip. This power level is the AL for determining the actual trip setpoint, which comes from the TFSP. The TFSP setpoint is chosen to allow operational margin so that scrams and recirculation pump trips can be avoided, by transferring steam to the turbine bypass system during T/G trips at low power.

Based on the guidelines in Section F.4.2.3 of ELTR1, the TSV Closure and TCV Fast Closure Scram Bypass AL is reduced (see Table 5-1). [[

]] The new AL is based on a reactor steam flow within approximately 1% of the original steam flow. Due to changes to the turbine, a new first stage pressure setpoint will be determined.

EPU results in an increased power level and the HPT modifications result in a change to the relationship of turbine first-stage pressure to reactor power level. The TFSP setpoint is used to reduce scrams and recirculation pump trips at low power levels where the turbine steam bypass system is effective for turbine trips and generator load rejections. In the safety analysis, this trip bypass only applies to events at low power levels that result in a turbine trip or load rejection. Maintaining the AL at the same absolute power as for the current setpoint, maintains the same transient analysis basis and scram avoidance range of the bypass valves.

Because the HPT is modified to support achieving the uprated level, a new AL (in psig) corresponding to the same absolute power as the current AL is established. Therefore, a new setpoint is calculated using the methodology as noted in Section 5.3, and the TS applicable condition in percent RTP has been changed. The AV (in psig) for Browns Ferry will be revised prior to EPU implementation.

To ensure that the new value is appropriate, EPU plant ascension startup test or normal plant surveillance will be used to validate that the actual plant interlock is cleared consistent with the safety analysis

5.3.12 Rod Worth Minimizer

The Rod Worth Minimizer LPSP is used to bypass the rod pattern constraints established for the control rod drop accident at greater than a pre-established low power level. The measurement

parameters are FW and steam flow. [[

]]

5.3.13 Pressure Regulator

The PCS is discussed within Section 5.2.1. The PCS provides the means by which the operating pressure setpoint of the reactor is established, provides for loading of the main turbine generator relative to reactor power, and provides for control of the main turbine bypass valves. The PCS controlling pressure signal is reactor pressure.

The reactor dome pressure is not changed for EPU. However, the increased steam flow results in a somewhat greater steam line pressure loss. Therefore, the pressure regulator operational setpoint must be adjusted to achieve the desired reactor pressure.

The small differences in tuning parameter values will be reconfirmed during the power ascension testing. Specific EHC and steam bypass control system tests will be performed during the initial EPU ascension phase, as summarized in Section 10.4.

5.3.14 Feedwater Flow Setpoint for Recirculation Cavitation Protection

The current value of the FW flow setpoint remains unchanged in terms of actual FW flow rate, because the cavitation interlock requirement is not based on the percentage of rated flow. However, the relative setpoint, as it appears on the power/flow map, is reduced slightly to account for EPU RTP. This is consistent with Section F.4.2.6 of ELTR1.

5.3.15 RCIC Steam Line High Flow Isolation

For EPU, the AL for steam line high flow indications remain based on 300% of the maximum rated steam flow to the RCIC turbine. Because there is no increase in the maximum reactor pressure as the result of EPU (based on the upper analytical pressure for the lowest group of MSRVs), there is no change in the RCIC turbine maximum steam flow rate or in the RCIC steam line high flow differential pressure values.

5.3.16 HPCI Steam Line High Flow Isolation

For EPU, the AL for the steam line high flow isolation remains based on 225% of the maximum rated steam flow to the HPCI turbine. Because there is no increase in the maximum reactor pressure as a result of EPU (based on the upper analytical pressure for the lowest group of MSRVs), there is no change in the HPCI turbine maximum steam flow rate or in the HPCI steam line high flow differential pressure values. The HPCI steam line AV for high flow isolation does not change.

5.4 REFERENCES

1. GE Nuclear Energy, "Generic Guidelines for General Electric Boiling Water Reactor Extended Power Uprate," (BLTR1), Licensing Topical Reports NEDC-32424P-A, Class III (Proprietary), February 1999; and NEDO-32424, Class I (Non-proprietary), April 1995.

2. TVA Branch Technical Instruction, EBB-TI-28, Setpoint Calculations, Revision 5, February 25, 2000.

3. Safety Evaluation by the Office of Nuclear Reactor Regulation Topical Report Instrumentation Setpoint Methodology General Electric Company NEDC-31336, Revision 1, November 6, 1995.

Table 5-1

Browns Ferry Analytical Limits For Setpoints

	Analytical Limits	
Parameter	**Current**	**EPU**
APRM Calibration Basis (MWt)	3458	3952
APRM Simulated Thermal Power Scram		
DLO Fixed	No change	
SLO Fixed	No change	
DLO Flow Biased (%RTP) [1]	$0.66W_D + 68\%$	$0.55W_D + 67.5\%$
SLO Flow Biased (%RTP) [1][2]	$0.66(W_D - \Delta W) + 68\%$	$0.55(W_D - \Delta W) + 67.5\%$
APRM Neutron Flux Scram	No change	
APRM Setdown Scram (%RTP) [1]	25	23
Rod Block Monitor		
DLO Flow Biased (%RTP) [1][4]	$0.66W_D + 64\%$	$0.55W_D + 63.5\%$
SLO Flow Biased (%RTP) [1][2][4]	$0.66(W_D - \Delta W) + 64\%$	$0.55(W_D - \Delta W) + 63.5\%$
Rod Block Monitor Upscale Function Ranges		
Low Power Range	No Change	
Intermediate Power Range	No Change	
1st High Power Range	No Change	
Typical Low Trip Setpoint[4]	No Change	
Typical Intermediate Trip Setpoint[4]	No Change	
Typical High Trip Setpoint[4]	No Change	
Rod Worth Minimizer	No Change	
Vessel High Pressure Scram	No Change	
High Pressure ATWS RPT	No Change	
MSRV Setpoints	No Change	
TSV & TCV Scram Bypass (%RTP) [1][3]	30	26

Table 5-1

Browns Ferry Analytical Limits For Setpoints (continued)

Parameter	Analytical Limits	
	Current	EPU
MSL High Flow Isolation	No Change	
MSL High Flow Isolation (differential pressure)	131.7 psid	196.6 psid
MSL Tunnel High Temperature Isolation	No Change	
FW Flow Cavitation Interlock Setpoint	No Change	
Low Steam Line Pressure MSIV Closure (Run Mode)	No change	
RCIC Steam Line High Flow Isolation	No change	
HPCI Steam Line High Flow Isolation	No change	

1. No credit is taken in any safety analysis.
2. W_D is % recirculation drive flow where 100% drive flow is that required to achieve 100% core flow at 100% power, and ΔW is the difference between the DLO and SLO drive flow at the same core flow.
3. TS AV provided.
4. Changed on a cycle-specific basis and documented in the COLR.

6. ELECTRICAL POWER AND AUXILIARY SYSTEMS

6.1 AC POWER

The Browns Ferry AC power supplies each include both off-site and on-site power. The on-site power distribution system consists of transformers, buses, and switchgear. AC power to the distribution system is provided from the transmission system or from onsite Diesel Generators. The Browns Ferry EPU plant electrical characteristics are shown in Table 6-1.

6.1.1 Off-Site Power System

The existing off-site electrical equipment was determined to be adequate for normal operation with the up rated electrical output as shown in Table 6-2. The only significant change in electrical load demand is due to the replacement with larger motors for the Condensate Booster and Condensate Pumps due to increased flow demand at EPU conditions. The review concluded the following:

- The Main Isolated Phase Bus Duct is to be modified/up-rated to have a continuous current rating of 36,740 Amperes and an asymmetrical current rating of 346,989 amps to support the Generator output at EPU conditions.
- The Tap Isolated Phase Bus Duct is to be modified/up-rated to have an asymmetrical current rating of 602,143 amps to support the Generator output at EPU conditions.
- The Generator breaker is to be modified/up-rated to have a continuous current rating of 36,740 Amperes and an asymmetrical current rating of 204,529 amps to support the Generator output at EPU conditions.
- The existing main power transformers and associated relaying are being upgraded as a material condition improvement due to obsolescence. The replacement transformers are adequate for operation with the EPU-related electrical output of the generator.
- Changes will be required to plant operating procedures to prevent automatic transfer to the 161-kV system when any unit is in backfeed or when any USST B is out of service to avoid overloading any of the 161-kV power supply circuits.
- The existing 500-kV switchyard buses, breakers, and switches are adequate for EPU operations. However, additional breakers and associated relaying are being added to increase operating flexibility of the 500-kV switchyard.
- The protective relaying for the main generator, transformer, and switchyard is adequate for the EPU generator output. However, relays may be upgraded or added as necessary to help ensure grid stability under certain close-in fault conditions.

A Transmission System Study has been performed, considering the increase in electrical output, to demonstrate conformance to General Design Criteria 17 (10 CFR 50, Appendix A) and to analyze for unit/grid stability. The study documented that no additional changes are required for

the Browns Ferry offsite power system to continue to meet GDC-17 requirements. Analyses in the study also determined that operation at EPU electrical outputs will not have a significant adverse effect on reliability of the offsite electrical system or on the stability of the Browns Ferry units.

6.1.2 On-site Power Distribution System

The on-site power distribution system loads were reviewed under normal and emergency operating scenarios for EPU conditions. Loads were computed based on equipment nameplate data or brake horsepower (BHP) as applicable. These loads were used as inputs for the computation of load, voltage drop, and short circuit current values. Operation at the EPU conditions is achieved for normal and emergency conditions by operating equipment within the nameplate rating running kW or applicable BHP.

The only significant change in electrical load demand is associated with power generation system motors for the condensate and condensate booster pumps. These system pumps experience increased flow demand at EPU conditions and will be replaced with higher capacity pumps and motors. To support these load increases, modifications to the onsite electrical system will be performed prior to EPU operation. Load flow and short circuit calculations were performed to verify the adequacy of the on-site AC system for the proposed changes. The existing protective relay settings are adequate to accommodate the increased load on the 4kV power system. Selective coordination is maintained between the pump motor breakers and the 4kV Unit Board main feeder breakers.

Significant changes to the on-site power analysis include:

- The BHP of the Reactor Recirculation Pump motors increases 17% for EPU, but remains within its motor uprate analysis capability.
- The Recirculation MG sets have been replaced with VFDs. The capability of a VFD is 9000 HP, which is adequate for the expected Reactor Recirculation Pump motor load of 8550 BHP.
- The electrical load demand associated with power generation system motors for the condensate pumps and condensate booster pumps increase for EPU. These system pumps experience increased flow demand at EPU conditions and will be replaced with higher capacity pumps and motors.

EPU conditions are achieved by utilizing existing equipment operating at or below the nameplate rating and within the calculated BHP for the required pump motors for both normal and emergency operating conditions.

Units 1 and 2 share four independent diesel generator units coupled, as an alternate source of safety-related power, to four independent 4160-V boards. [[

]] The systems have sufficient

capacity to support all required loads to achieve and maintain safe shutdown conditions and to operate the ECCS equipment following postulated accidents and transients.

6.2 DC POWER

The DC power distribution system provides control and motive power for various systems/components within the plant. In normal and emergency operating conditions, loads are computed based on equipment nameplate ratings. These loads are used as inputs for the computation of load, voltage drop, and short circuit current values. The load addition for control logic relays associated with on site power system changes are within existing margins.

Operation at the EPU conditions does not increase any load beyond nameplate rating or revise any component operating duty cycle; therefore, the DC power distribution system remains adequate.

6.3 FUEL POOL

The fuel pool systems consist of storage pools, fuel racks, the FPCC system, and the ADHR system. The objective of the fuel pool system is to provide specially designed underwater storage space for the spent fuel assemblies. The objective of the fuel pool systems is to remove the decay heat from the fuel assemblies and maintain the fuel pool water within specified temperature limits.

6.3.1 Fuel Pool Cooling

The Browns Ferry SFP bulk water temperature must be maintained below the licensing limit of 150°F. The limiting condition is a full core discharge with all remaining storage locations filled with used fuel from prior discharges. A normal batch offload (approximately 332 fuel bundles) is assumed for outage planning with the additional assumptions in either case (batch or full core) of only one of two trains of the FPCC system and only one of two trains of the non-safety ADHR system available, 24-month fuel cycle, ANSI/ANS 5.1-1979 + 2σ, and GE14 fuel. The RHR system supplemental fuel pool cooling mode may be used to augment the capacity of the FPCC system when the ADHR system is unavailable. The batch and full core offload scenarios were also analyzed with only one of two trains of FPCC system and one train of RHR in the supplemental fuel pool cooling mode. The key results of these analyses are presented in Table 6-3. The temperature requirement ensures operator comfort (an operational requirement), and provides ample margin against an inventory loss in the fuel pool due to evaporation or boiling.

The EPU SFP heat load is higher than the pre-EPU heat load. The EPU heat loads at the limiting full core offload condition and the normal batch offload are calculated and then the bulk pool temperature is determined to evaluate the FPCC system adequacy. EPU does not affect the heat removal capability of the FPCC system, the ADHR system, or the supplemental fuel pool cooling mode of the RHR system. EPU results in slightly higher core decay heat loads during refueling. Each reload affects the decay heat generation in the SFP after a batch discharge of fuel from the reactor. The full core offload heat load in the SFP reaches a maximum

immediately after the full core discharge. Based on the heat load evaluations, the SFP bulk temperature remains less than 150°F for either core offload case, and thus, is acceptable for EPU conditions.

The SFP normal makeup source is from the Seismic Category II Condensate Storage system, with a capacity of 100 gpm and is not affected by EPU and remains adequate for EPU conditions.

In the unlikely event of a complete loss of SFP cooling capability, Table 6-3 shows that the SFP could reach the boiling temperature and produce a maximum boil-off rate of 104 gpm. Two Seismic Category I emergency makeup sources, the RHR/RHR Service Water crosstie and the EECW system, each have a makeup capability of at least 150 gpm.

Prior to each refueling outage, calculations are performed to determine the actual pool heat load and determine which equipment must be placed in service to maintain pool temperature. Administrative controls are used to ensure that the fuel pool cooling capacity is not exceeded during core offload. Existing plant instrumentation and procedures provide adequate indications and direction for monitoring and controlling SFP temperature and level during normal batch offloads and the unexpected case of the limiting full core offload. Symptom based operating procedures exist to provide mitigation strategies including placing additional cooling trains or systems in service, stopping fuel movement, and initiating make-up if necessary. The symptom based entry conditions and mitigation strategies for these procedures do not require changes for EPU.

6.3.2 Crud Activity and Corrosion Products

The crud in the SFP would increase by approximately 2%, assuming that all residual crud in the RCS is transported to the SFP. This is based on a RWCU system removal efficiency of 90% and approximately 16% increase in FW flow for EPU. However, the increase is insignificant, and SFP water quality is maintained by the FPCC system.

6.3.3 Radiation Levels

The normal radiation levels around the SFP may increase slightly primarily during fuel handling operation. Current Browns Ferry radiation procedures and radiation monitoring program would detect any changes in radiation levels and initiate appropriate actions.

6.3.4 Fuel Racks

The increased decay heat from the EPU results in a higher heat load in the fuel pool during long-term storage. The fuel racks are designed for higher temperatures (212°F) than the licensing limit of 150°F. There is no effect on the design of the fuel racks because the original fuel pool design temperature is not exceeded.

6.4 WATER SYSTEMS

The Browns Ferry water systems are designed to provide a reliable supply of cooling water for normal operation and design basis accident conditions.

6.4.1 Service Water Systems

The Browns Ferry water systems consist of safety-related and nonsafety-related service water systems, the circulating water system and main condenser, and the ultimate heat sink. The safety-related service water systems include the EECW system, the RHRSW system, and the UHS. The non-safety-related service water systems include the RBCCW system and the RCW system.

6.4.1.1 Safety-Related Loads

The safety-related service water systems are designed to provide a reliable supply of cooling water during and following a design basis accident for the following essential equipment and systems:

- RHR HXs;
- SFP HXs , as needed for supplemental cooling;
- SFP emergency make-up, if necessary;
- Standby core and containment cooling emergency backup, if necessary; and
- EECW system.

The evaluation of the systems performance is given in the following subsections.

6.4.1.1.1 Emergency Equipment Cooling Water System

The safety-related performance of the EECW system during and following the most demanding design basis event, the LOCA, for the following equipment and systems is not dependent on RTP:

EDG Engine Coolers;

RHR Pump Seal Coolers;

Diesel Generator Building Chillers;

Electric Board Room ACU Condensers and Chillers;

Control Bay Chillers;

$H_2 - O_2$ Analyzers;

Control Air Compressors;

RBCCW HXs; and

Unit 1 equipment serving as backup to Unit 2 and Unit 3.

The diesel generator loads, RBCCW HXs, control air compressor loads, RHR pump seal loads, H2-O2 Analyzer loads, and Unit 1 equipment loads serving as backup to Unit 2 and Unit 3 remain unchanged for LOCA conditions following uprated operation. The building cooling loads (Area Cooling Units) also remain the same as that for rated operation because the equipment performance in these areas has remained unchanged for post-LOCA conditions. The RHR and CS Room Cooler post-LOCA heat loads increase slightly because of room temperature increases at EPU conditions (<2°F for RHR and < 3°F for CS), but remain within the current design limits.

The EECW system is a shared system with the capacity to supply cooling water all three units. EPU does not significantly increase equipment cooling water loads, and thus, the capacity of the EECW system remains adequate.

6.4.1.1.2 Residual Heat Removal Service Water System

The containment cooling analysis in Section 4.1.1 shows that the post-LOCA RHR heat load increases due to an increase in the maximum suppression pool temperature that occurs following a LOCA. The post-LOCA containment and suppression pool responses have been calculated based on an energy balance between the post-LOCA heat loads and the existing heat removal capacity of the RHR and RHRSW systems. As discussed in Sections 3.11 and 4.1.1, the existing suppression pool structure and associated equipment have been reviewed for acceptability based on this increased post-LOCA suppression pool temperature. Therefore, the containment cooling analysis and equipment review demonstrate that the suppression pool temperature can be maintained within acceptable limits in the post-accident condition at EPU based on the existing capability of the RHRSW system. With EPU, the RHRSW system has sufficient capacity to supply adequate cooling and makeup to the spent fuel pool heat exchangers and spent fuel pool, respectively. In addition, the RHRSW system has sufficient capacity to serve as a standby coolant supply for long term core and containment cooling as required for EPU conditions. The RHRSW system flow rate is not changed.

6.4.2 Main Condenser/Circulating Water/Normal Heat Sink Performance

The main condenser, circulating water, and heat sink systems are designed to remove the heat rejected to the condenser and thereby maintain adequately low condenser pressure as recommended by the turbine vendor. Maintaining adequately low condenser pressure ensures the efficient operation of the turbine-generator and minimizes wear on the turbine last stage buckets.

EPU operation increases the heat rejected to the condenser and, therefore, reduces the difference between the operating pressure and the recommended maximum condenser pressure. If condenser pressures approach the main turbine backpressure limitation, then reactor thermal power reduction would be required to reduce the heat rejected to the condenser and maintain condenser pressure within the main turbine requirements.

The performance of the main condenser was evaluated for EPU. This evaluation is based on a design duty over the actual range of circulating water inlet temperatures, and confirms that the condenser, circulating water system, and heat sink are adequate for EPU operation. Current

main turbine backpressure limitations may require load reductions at the upper range of the anticipated circulating water inlet temperatures.

6.4.2.1 Discharge Limits

The state discharge limits were compared to the current discharges and bounding analysis discharges, as shown in Table 6-4. This comparison demonstrates that the plant remains within the state discharge limit during operation at EPU. Based on recorded historical data, the administrative control procedures presently in place remain valid to ensure EPU operation remains within state discharge limits.

6.4.3 Reactor Building Closed Cooling Water System

The heat loads on the RBCCW system increase < 0.1%. The RBCCW heat loads are mainly dependent on the reactor vessel temperature and/or flow rates in the systems cooled by the RBCCW. The change in vessel temperature is minimal and does not result in any significant increase in drywell cooling loads. The flow rates in the systems cooled by the RBCCW (e.g., Recirculation and RWCU pumps cooling) do not change due to EPU and, therefore, are not affected by EPU. The operation of the remaining equipment cooled by the RBCCW (e.g., sample coolers and drain sump coolers) is not power-dependent and is not affected by EPU. The RBCCW system contains sufficient redundancy in pumps and heat exchangers to ensure that adequate heat removal capability is available during normal operation. Sufficient heat removal capacity is available to accommodate the small increase in heat load due to EPU.

6.4.4 Raw Cooling Water System

The temperature of RCW system discharge results from the heat rejected to the RCW system via components cooled by the system. The power dependent heat loads on the RCW system, that are increased by EPU, are those related to the operation of the RBCCW system, the condensate pumps, condensate booster pumps, and the isolated phase bus duct air HX. The increase in RCW system discharge temperature from these sources due to EPU is < 1°F, which is minimal and within equipment tolerances.

6.4.5 Ultimate Heat Sink

The UHS is the Wheeler Reservoir/Tennessee River. The upstream temperature of the river is unaffected by operations at EPU conditions. The existing UHS system provides a sufficient quantity of water at a temperature less than 95°F (design temperature) to perform its safety-related functions for EPU. As discussed in Section 4.1, the service water (UHS) temperature assumed in the DBA analyses was increased from 92°F to 95°F. Therefore, the TS for UHS limits are changed to reflect these new EPU analyses.

The UFSAR includes a discussion relative to heatup of the downstream portion of the pool that would exist following the loss of the downstream dam on the Tennessee River. The river thermal rise post-shutdown would increase due to the increase in decay heat associated with EPU conditions but would not significantly affect this event.

6.5 STANDBY LIQUID CONTROL SYSTEM

The SLCS is designed to shut down the reactor from rated power conditions to cold shutdown in the postulated situation that some or all of the control rods cannot be inserted. This manually operated system pumps a highly enriched sodium pentaborate solution into the vessel, to provide neutron absorption and achieve a subcritical reactor condition. SLCS is designed to inject over a wide range of reactor operating pressures.

[[

]] The TS minimum available volume of sodium pentaborate solution associated with this increase is bounded by the volume requested in Reference 1. [[

]]

The boron injection rate requirement for the limiting ATWS event with SLCS injection, is not increased for EPU.

The SLCS is designed for injection at a maximum reactor pressure equal to the upper analytical limit for the lowest group of MSRVs operating in the safety relief mode. For the EPU, the nominal reactor dome pressure and the MSRV setpoints are unchanged. Therefore, the capability of the SLCS to provide its backup shutdown function is not affected by the EPU. The SLCS is not dependent upon any other MSRV operating modes.

Based on the results of the plant specific ATWS analysis, the maximum reactor lower plenum pressure following the limiting ATWS event reaches 1204 psig during the time the SLCS is analyzed to be in operation. Consequently, there is a corresponding increase in the maximum pump discharge pressure and a decrease in the operating pressure margin for the pump discharge relief valves. The operation of the pump discharge system was analyzed to confirm that the pump discharge relief valves re-close in the event that the system is initiated before the time that the reactor pressure recovers from the first transient peak. The evaluation compared the calculated maximum reactor pressure needed for the pump discharge relief valves to re-close with the lower reactor pressure expected during the time the MSRVs are cycling open and closed prior to the time when rated SLCS injection is assumed in the ATWS analysis. Consideration was also given to system flow, head losses for full injection, and cyclic pressure pulsations due to the positive displacement pump operation in determining the pressure margin to the opening set point for the pump discharge relief valves. The pump discharge relief valves are periodically

tested to maintain this tolerance. Therefore, the current SLCS process parameters associated with the minimum boron injection rate are not changed.

[[

]] The evaluation shows that EPU has no adverse effect on the ability of the SLCS to mitigate an ATWS event.

6.6 POWER DEPENDENT HVAC

The HVAC systems consist mainly of heating, cooling supply, exhaust, and recirculation units in the turbine building, reactor building, and the drywell. EPU results in slightly higher process temperatures and small increases in the heat load due to higher electrical currents in some motors and cables.

The affected areas are the drywell; the steam tunnel and the ECCS rooms in the reactor building; and the FW heater bay, condenser, and the condensate/FW pump areas in the turbine building. Other areas in the reactor building and the turbine building are unaffected by the EPU because the process temperatures remain relatively constant.

The increased heat loads during normal plant operation result in < 0.5°F increase in the drywell, the MS tunnel, and ECCS rooms from increased decay heat. In the turbine building, the maximum temperature increase in the FW heater bay, condensate/FW pump areas, and condenser areas is < 2°F.

Based on a review of design basis documents, the design of the HVAC is adequate for the EPU with the exception of the condensate and condensate booster pump motor coolers. Replacement of or modification to these pump motors, described in Section 7.4, may require modifications to their coolers.

6.7 FIRE PROTECTION

This section addresses the effect of EPU on the fire protection program, fire suppression and detection systems, and reactor and containment system responses to postulated 10 CFR 50 Appendix R fire events.

[[ ]] Any changes in physical plant configuration or combustible loading as a result of modifications to implement the EPU, will be evaluated in accordance with the plant modification and fire protection programs. The safe shutdown systems and equipment used to achieve and maintain cold shutdown conditions do not change, and are adequate for the EPU conditions. The scope of operator actions required to mitigate the consequences of a fire are not affected. Therefore, the fire protection systems and analyses are not affected by EPU.

The reactor and containment responses to the postulated 10 CFR 50 Appendix R fire event at EPU conditions are evaluated in Section 6.7.1. The results show that the peak fuel cladding temperature, reactor pressure, and containment pressures and temperatures are below the acceptance limits and demonstrate that there is sufficient time available for the operators to

perform the necessary actions to achieve and maintain cold shutdown conditions. Therefore, the fire protection systems and analyses are not adversely affected by EPU.

6.7.1 10 CFR 50 Appendix R Fire Event

A plant-specific evaluation was performed to demonstrate safe shutdown capability in compliance with the requirements of 10 CFR 50 Appendix R assuming EPU conditions. The limiting Appendix R fire event from the current analysis was reanalyzed assuming EPU. The fuel heatup analysis was performed using the SAFER/GESTR-LOCA analysis model. The containment analysis was performed using the SHEX model. Justification for using SAFER/GESTR-LOCA and SHEX models for EPU calculations is presented in Section 4. These are the same analysis methodologies that were used for the existing Appendix R Fire event analysis. This evaluation determined the effect of EPU on fuel cladding integrity, reactor vessel integrity, and containment integrity as a result of the fire event.

The postulated Appendix R fire event using the minimum SSDS was analyzed for the three cases described below:

Case 1: No spurious operation of plant equipment occurs and the operator initiates three MSRVs 25 minutes into the event.

Case 2: One MSRV opens immediately due to a spurious opening signal generated as a result of the fire. The MSRV is reclosed 10 minutes into the event by operator action. The operator initiates three MSRVs 20 minutes into the event.

Case 3: One MSRV opens immediately as in Case 2, but remains open throughout the event. The operator initiates three MSRVs 20 minutes into the event.

The above are the same cases as those described in the Browns Ferry Fire Protection Report (Reference 2) except as described below.

These cases were evaluated for EPU with some reduction in conservatism in the analytical assessment.

For the pre-EPU analyses, for all cases it was conservatively assumed that the LPCI injection does not occur until reactor pressure is ≤ 200 psig, instead of the standard injection point of 319.5 psig, which delays LPCI injection into the vessel. For the EPU assessment the analysis is based on the reactor vessel pressure reaching 385 psig, and then the LPCI injection valve is opened by operator action. LPCI flow to the vessel begins at 319.5 psig. This adjustment to the analysis does not affect any operator action because the current procedures direct the operations staff open the LPCI injection valve when RPV pressure is ≤ 450 psig.

The bounding PCT case is Case 1. For this case, the time available to the operator to open three MSRVs is 25 minutes at the EPU conditions. The pre-EPU analysis determined the three MSRVs were required to be opened within 30 minutes. This reduction in the time available does not have any effect because the current procedures require this action to be completed within 20

minutes. For CLTP and EPU, the PCTs are calculated using conservative LPCI performance characteristics (e.g., minimum flow rate as functions of vessel pressure).

In addition, spurious operation of the HPCI system was reviewed in accordance with Reference 2. The HPCI system was assumed to initiate at the onset of the Appendix R event, and flow at its nominal flow rate. The time for the reactor vessel water level to reach the MSLs is greater than 6 minutes. Therefore, plant procedures will require HPCI isolation prior to 6 minutes during an Appendix R event.

The results of the Appendix R evaluation for EPU provided in Table 6-5 demonstrate that the fuel cladding integrity, reactor vessel integrity, and containment integrity are maintained and that sufficient time is available for the operator to perform the necessary actions. The current exemption for the momentary core uncovery during depressurization remains necessary for EPU. EPU does not affect any other exemptions described in Reference 2. No changes are necessary to the equipment required for safe shutdown for the Appendix R event. One train of systems remains available to achieve and maintain safe shutdown conditions from either the main control room or the remote shutdown panel. Therefore, EPU has no adverse effect on the ability of the systems and personnel to mitigate the effects of an Appendix R fire event, and satisfies the requirements of Appendix R with respect to achieving and maintaining safe shutdown in the event of a fire.

6.8 SYSTEMS NOT IMPACTED BY EXTENDED POWER UPRATE

6.8.1 Systems With No Impact

Similar to the systems listed in Table J-1 of ELTR1 (Reference 3), the systems in Table 6-6 are not affected by operation of the plant at the EPU power level.

6.8.2 Systems With Insignificant Impact

The systems affected in a very minor way by operation of the plant at the uprated power level are listed in Table 6-7. This listing is similar to the systems listed in Table J-2 of ELTR1. For these systems, the effects of EPU are insignificant with respect to their design and operation.

6.9 REFERENCES

1. TVA Letter, "Browns Ferry Nuclear Plant (BFN) - Units 1, 2, and 3 - License Amendment - Alternative Source Term," dated July 31, 2002, R08 020731 649, including Tech. Spec. No. 405 (TVA-BFN-TS-405).
2. Tennessee Valley Authority, "Fire Protection Report," Vol. 1, Revision 16, January 2001.
3. GE Nuclear Energy, "Generic Guidelines for General Electric Boiling Water Reactor Extended Power Uprate," (ELTR1), Licensing Topical Reports NEDC-32424P-A, Class III (Proprietary), February 1999; and NEDO-32424, Class I (Non-proprietary), April 1995.

Table 6-1

Browns Ferry EPU Plant Electrical Characteristics

Parameter	Value
Guaranteed Generator Output (MWe)	1265
Rated Voltage (kV)	22.0
Power Factor	0.98
Guaranteed Generator Output (MVA)	1280
Current Output (kA)	33.591
Isolated Phase Bus Duct Rating (kA)	36.740
Main Transformers Rating (MVA) U2/U3	1500/1344
Transformer Output (MVA)	1250(1)

(1) 1280 MVA Generator rating – 30MVA Station Load

Table 6-2

Browns Ferry Offsite Electric Power System

Component	Rating	EPU Output
Generator (MVA)	1280	1280
Isolated Phase Bus Duct (kA)	36.740	33.591
Main Transformers (MVA)	1500 (Unit 2) 1344 (Unit 3)	1250 (1)
Auxiliary Transformer (MVA)	72(2)	40(3)
Switchyard (limiting) (MVA)	1750(4)	1250(1)

1. 1280 MVA projected ultimate Unit 2/3 generator rating – 30 MVA Station Load
2. Two auxiliary transformers rated 40 MVA and 32 MVA.
3. Determined using actual plant data with estimated additional loading due to EPU.
4. Seven 500 kV lines each rated at 1750 MVA.

Table 6-3

Browns Ferry Spent Fuel Pool Parameters

Conditions / Parameter	Batch	Limiting Full Core Offload	Limit
Configuration 1: One train each of FPCC and ADHR in service [1]			
Peak SFP Temperature (°F)	99.1	121.5	125 (Batch) 150 (Full Core)
Time to Peak SFP Temperature (hr)	80	109	NA
Time to boil from loss of all cooling at peak temperature (hr)	14	5	NA
Boil off rate (gpm)	48	104	150
Configuration 2: One train each of FPCC and RHR supplemental fuel pool cooling mode in service			
Peak SFP Temperature (°F)	124.9	149.8	125 (Batch) 150 (Full Core)
Time to Peak SFP Temperature (hr)	130[2]	229[3]	NA
Time to boil from loss of all cooling at peak temperature (hr)	13	4	NA
Boil off rate (gpm)	42	80	150

1. Assumes core offload begins 50 hours after reactor shutdown to allow for cooldown, vessel head removal, refueling cavity filling, and other refueling preparations.
2. Assumes core offload begins 95 hours after reactor shutdown and includes 45 hours of in-vessel stay time because the RHR supplemental fuel pool cooling mode has less heat removal capacity than the ADHR system and 50 hours to allow for cooldown, vessel head removal, refueling cavity filling, and other refueling preparations.
3. Assumes core offload begins 165 hours after reactor shutdown and includes 115 hours of in-vessel stay time because the RHR supplemental fuel pool cooling mode has less heat removal capacity than the ADHR system and 50 hours to allow for cooldown, vessel head removal, refueling cavity filling, and other refueling preparations.

Table 6-4

Browns Ferry Effluent Discharge Comparison

Parameter	State Limit	Maximum Current*	EPU
Flow (million gallons/day)	None	1008	No Change
Downstream Temperature 24-hour avg. (°F)	90.0	90.0	No Change
Downstream Temperature 1-hour avg. (°F)	93.0	93.0	No Change
In-stream Δ T, 24-hour avg (°F)	10.0	8	<10
Chlorine (average/day) (mg/L/per day)	0.064	Not detectable	No Change
Net heat addition (MBTU/hr)	None	8128	9284

* Most conservative value for each observed parameter, and does not represent concurrently observed conditions.

Table 6-5

Browns Ferry Appendix R Fire Event Evaluation Results

Parameter	CLTP	EPU	App. R Criteria
Cladding Heatup (PCT), °F	1485	1428	≤ 1500
Primary System Pressure, psig	1150	1150	≤ 1375
Primary Containment Pressure, psig	18.6	13.6	≤ 56
Suppression Pool Bulk Temperature, °F	212	227	≤ 281(2) ≤ 227(3)
NPSH (1)	Yes	Yes	Adequate for system using suppression pool water source

1. NPSH demonstrated adequate, see Section 4.2.5.
2. Containment structure design limit.
3. Torus attached piping limit.

Table 6-6

Browns Ferry Systems With No Impact

System Number	System Title
012	Auxiliary Boiler
018	Fuel Oil
020	Lubricating Oil
027	Condenser Circulating Water Tube Cleaning
028	Water Treatment
029	Potable Water
032	Control Air
033	Service Air
034	Vacuum priming
036	Auxiliary Boiler FW Secondary Treatment
037	Gland Seal Water
038	Insulating Oil
040	Drainage
043	Sampling and Water Quality
044	Building Heating
049	Breathing Air
050	Raw Water Chemical Treatment
051	Chemical Treatment
052	Seismic Monitoring
056	Temperature Monitoring
058	Biothermal Facility
064C	Secondary Containment
079	Fuel Handling and Storage
086	Diesel Generator Starting Air
099	Reactor Protection
111	Cranes
112	Shop Equipment
200	200 Series display boards
244	Communications
247	240 VAC Lighting System
258	Operations Recorder
260	Security
301	Sewage Disposal
302	Elevators
315	Microwave
327	Flood Protection
417	Meteorological Tower

Table 6-7

Browns Ferry Systems With Insignificant Impact

System Number	System Title
004	Hydrogen Water Chemistry
009	Control Bay Panels
030	Normal Ventilation
053	Demineralizer Backwash Air
055	Annunciator
080	Drywell Temperature Monitoring
925	25 Series Panels (Local Panels)

7. POWER CONVERSION SYSTEMS

7.1 TURBINE-GENERATOR

The turbine and generator was originally designed with a maximum flow-passing capability and generator output in excess of rated conditions to ensure that the original rated steam-passing capability and generator output is achieved. This excess design capacity ensures that the turbine and generator meet rated conditions for continuous operating capability with allowances for variations in flow coefficients from expected values, manufacturing tolerances, and other variables that may adversely affect the flow-passing capability of the units. The difference in the steam-passing capability between the design condition and the rated condition is called the flow margin.

The turbine-generator was originally designed with a flow margin of 5%, however, for operation at CLTP the turbine was redesigned and currently operates with a flow margin of approximately 3%. The current rated throttle steam flow is 14.12 Mlb/hr at a throttle pressure of 980 psia. The generator is rated at 1280 MVA, which results in a rated electrical output (gross) of 1265 MWe at a power factor of 0.98.

At EPU RTP and reactor dome pressure of 1050 psia, the turbine operates at an increased rated throttle steam flow of 16.44 Mlb/hr and at a throttle pressure of 962 psia. To maintain control capability GE uses a minimum target value of approximately 3% throttle flow ratio, with controllability confirmed by unit testing as described in Section 10.4. For operation at EPU, the high pressure turbine has been redesigned with new diaphragms and buckets for at least the minimum target throttle flow margin, to increase its flow passing capability.

The expected environmental changes, such as diurnal heating and cooling effects changing cycle efficiency, periodically require management of reactor power to remain within the generator rating. The required variations in reactor power do not approach the magnitude of changes periodically required for surveillance testing and rod pattern alignments and other occasional events requiring de-rating, such as equipment out of service for maintenance.

A rotor missile analysis was performed at the EPU conditions based on the NRC-approved methodology in NUREG-1048, which applies to units with shrunk-on wheels. Based on the calculated results of the missile analysis, the missile failure probability is acceptable.

The overspeed calculation compares the entrapped steam energy contained within the turbine and the associated piping, after the stop valves trip, and the sensitivity of the rotor train for the capability of overspeeding. The entrapped energy increases slightly for the EPU conditions. The hardware modification design and implementation process establishes the overspeed trip settings to provide protection for a turbine trip.

7.2 CONDENSER AND STEAM JET AIR EJECTORS

The condenser converts the steam discharged from the turbine to water to provide a source for the condensate and FW systems. The SJAB remove noncondensable gases from the condenser to improve thermal performance.

The condenser and SJAE functions are required for normal plant operation and are not safety-related.

The condensers were evaluated for performance at EPU conditions based on a maximum cold water temperature of 90°F and current circulating water system flow. Additional analysis at EPU conditions also determined the condenser back pressure would be below the 5" Hg. design limit, assuming cleanliness levels as low as 85%.

Due to the increase in condensate flow rate associated with EPU conditions, the retention time of condensate in the condenser hotwell is slightly reduced to 1.7 minutes. Condenser hotwell capacities and level instrumentation are adequate for EPU conditions. Periodic eddy current testing and water chemistry monitoring are performed to monitor the effects of EPU RTP operation on the condenser tubes.

The design of the condenser air removal system is not adversely affected by EPU and no modification to the system is required. The physical size of the primary condenser and evacuation time are the main factors in establishing the capabilities of the vacuum pumps. These parameters do not change. Because flow rates do not change, there is no change to the two-minute holdup time in the pump discharge line routed to the reactor building vent stack. The design capacity of the SJAEs is not affected by EPU, because they were originally designed for operation at greater than warranted flows.

7.3 TURBINE STEAM BYPASS

The Turbine Steam Bypass system provides a means of accommodating excess steam generated during normal plant maneuvers and transients.

The turbine bypass valves were initially rated for a total steam flow capacity of not less than 25% of the original rated reactor steam flow, or ~3.56 Mlb/hr. Each of nine bypass valves is designed to pass a steam flow of ~400,000 lbm/hr and does not change at EPU RTP. At EPU conditions, rated reactor steam flow is 16.44 Mlb/hr, resulting in a bypass capacity of 21.7% of EPU rated steam flow. The bypass capacity at Browns Ferry remains adequate for normal operational flexibility at EPU RTP.

The bypass capacity is used as an input to the reload analysis process for the evaluation of transient events that credit the Turbine Steam Bypass System (see Section 9.1).

7.4 FEEDWATER AND CONDENSATE SYSTEMS

The FW and condensate systems do not perform a system level safety-related function, and are designed to provide a reliable supply of FW at the temperature, pressure, quality, and flow rate as required by the reactor. Therefore, these systems are not safety-related. However, their

performance has a major effect on plant availability and capability to operate at the EPU condition. Modifications to some nonsafety-related equipment in the FW and condensate systems are necessary to attain full EPU core thermal power. Implementation of these modifications is reviewed per the site 10 CFR 50.59 process.

For EPU, the FW and condensate systems meet the following performance criteria with modifications to some nonsafety-related equipment:

1. The systems provide a reliable supply of FW at the EPU dome pressure with sufficient capacity to supply the steady-state FW flow demanded at the EPU condition.

2. The systems have the capacity to provide at least 105% of the EPU FW flow. This ensures that Browns Ferry remains available during water level transients, avoids scrams, and minimizes challenges to plant safety systems.

3. The FW system is capable of providing adequate FW flow at the expected operating pressure, and to provide unit trip avoidance when one FW pump is tripped.

4. The runout capacity of the FW system in the limiting pump alignment does not exceed the performance capacity assumed in the transient analyses.

7.4.1 Normal Operation

System operating flows at EPU increase approximately 20% of rated flow at the OLTP. The condensate and FW systems will be modified to assure acceptable performance with the new system operating conditions.

The FW heaters will be analyzed and verified to be acceptable for the higher FW heater flows, temperatures, and pressures for the EPU, and rerated prior to implementation of EPU. The performance of the FW heaters will be monitored during the EPU power ascension program.

7.4.2 Transient Operation

To account for FW demand transients, the FW system was evaluated to ensure that a minimum of 5% margin above the EPU FW flow was available. For system operation with all system pumps available, the predicted operating parameters were acceptable and within the component capabilities.

The FW system post feed pump trip capacity was evaluated to confirm that with the modifications to the FW and Condensate system configurations, the capability to supply the transient flow requirements is maintained or increased. A transient analysis was performed (Section 9.1.3) to determine the reactor level response following a single FW pump trip. The results of the analysis show that the system response is adequate during the EPU conditions.

7.4.3 Condensate Demineralizers

The effect of EPU on the CFDs was reviewed. The system requires modification to support CFD full flow operation during backwashing and pre-coating without requiring a plant power reduction. The system experiences slightly higher loadings resulting in slightly reduced CFD

run times. However, the reduced run times are acceptable (refer to Section 8 for the effects on the radwaste systems).

8. RADWASTE AND RADIATION SOURCES

8.1 LIQUID AND SOLID WASTE MANAGEMENT

The Liquid and Solid Radwaste systems collects, monitors, processes, stores, and returns processed radioactive waste to the plant for reuse or for discharge.

The single largest source of liquid and wet solid waste is from the backwash of condensate demineralizers. EPU results in an increased flow rate through the condensate demineralizers, resulting in a reduction in the average time between backwashes. This reduction does not affect plant safety. Similarly, the RWCU filter-demineralizer requires more frequent backwashes due to higher levels of impurities as a result of the increased FW flow.

The floor drain collector subsystem and the waste collector subsystem both receive periodic inputs from a variety of sources. EPU does not affect system operation or equipment performance. Therefore, neither subsystem is expected to experience a large increase in the total volume of liquid and solid waste due to operation at EPU conditions.

The increased loading of soluble and insoluble species increases the volume of the liquid processed wastes by 4% and the volume of the solid processed wastes by 15%. The total volume of liquid and solid processed waste does not significantly increase (as compared to the Radwaste System capacity) because the only increase in processed waste is due to more frequent backwashes of the condensate demineralizers and RWCU filter demineralizers. The total liquid and solid increases are within the Radwaste System capacity. Therefore, EPU does not have an adverse effect on the processing of liquid and solid radwaste, and there are no significant environmental effects.

The increases in the liquid and the solid processed waste are based on the increase due to the FW flow increase. The percentage bounding value for the increase in liquid and solid processed waste is equal to or less than that of the FW flow percentage increase.

8.2 GASEOUS WASTE MANAGEMENT

The gaseous waste management systems collect, control, process, store, and dispose of gaseous radioactive waste generated during normal operations. The gaseous waste management systems include the offgas system and various building ventilation systems. The systems are designed to meet the requirements of 10 CFR 20 and 10 CFR 50, Appendix I.

Non-condensable radioactive gas from the main condenser, along with air inleakage, normally contains activation gases (principally N-16, O-19 and N-13) and fission product radioactive noble gases. This is the major source of radioactive gas (greater than all other sources combined). These non-condensable gases along with non-radioactive air are continuously removed from the main condensers by the SJAEs, which discharge into the offgas system.

Building ventilation systems control airborne radioactive gases by using combinations of devices such as HEPA and charcoal filters, and radiation monitors that signal automatic isolation dampers or

trip supply and/or exhaust fans, or by maintaining negative air pressure, where required, to limit migration of gases. [[

]] This is because the amount of fission products released into the coolant depends on the number and nature of the fuel rod defects, and is approximately linear with respect to core thermal power. The concentration of coolant activation products in the steam remains nearly constant. The release limit is an administratively controlled variable, and is not a function of core power. The gaseous effluents are well within limits at original power operation and remain well within limits following implementation of EPU. There are no significant environmental effects due to EPU.

8.2.1 Offgas System

The primary function of the Offgas system is to process and control the release of gaseous radioactive effluents to the site environs so that the total radiation exposure of persons in offsite areas is within the guideline values of 10 CFR 50, Appendix I.

The radiological release rate is administratively controlled to remain within existing site release rate limits and is a function of fuel cladding performance, main condenser air inleakage, charcoal adsorber inlet dew point, and charcoal adsorber temperature.

Because EPU affects the flow rate of radiolytic hydrogen and oxygen to the Offgas System, the catalytic recombiner temperature and offgas condenser heat load are affected. The Browns Ferry radiolytic decomposition rate is based upon Browns Ferry design specifications adjusted for EPU power level. The EPU analysis for the Offgas System utilized a higher decomposition rate that is more conservative than the Browns Ferry plant specific decomposition rate. The EPU hydrogen flow rates and concentrations are still within the design limits of the Offgas System. The catalytic recombiner and offgas condenser, as well as downstream components, have sufficient design margin to handle the increase in thermal power for EPU without exceeding the system design limits of temperature, flow rates, or heat loads.

In addition, HWC operation when used will cause a reduction in core radiolysis. The combination of the HWC injected hydrogen plus the reduced radiolysis is expected to produce a lower net hydrogen flow to the Offgas System.

8.3 RADIATION SOURCES IN THE REACTOR CORE

8.3.1 Normal Operation

During power operation, the radiation sources in the core are directly related to the fission rate. These sources include radiation from the fission process, accumulated fission products and neutron reactions as a secondary result of fission. Historically, these sources have been defined in terms of energy or activity released per unit of reactor power. Therefore, for EPU, the percent increase in the operating source terms is no greater than the percent increase in power

8.3.2 Normal Post-Operation

The post-operation radiation sources in the core are primarily the result of accumulated fission products. Two separate forms of post-operation source data are normally applied. The first of these is the core gamma-ray source, which is used in shielding calculations for the core and for individual fuel bundles. This source term is defined in terms of MeV/sec per Watt of reactor thermal power (or equivalent) at various times after shutdown. The total gamma energy source, therefore, increases in proportion to reactor power.

The second set of post-operation source data consists primarily of nuclide activity inventories for fission products in the fuel. These data are needed for post-accident and spent fuel pool evaluations, which are performed in compliance with regulatory guidance that applies different release and transport assumptions to different fission products. The core fission product inventories for these evaluations are based on an assumed fuel irradiation time, which develops "equilibrium" activities in the fuel (typically 3 years). Most radiologically significant fission products reach equilibrium within a 60-day period. [[

]] The radionuclide inventories are provided in terms of Curies per megawatt of reactor thermal power at various times after shutdown.

The results of the plant specific radiation sources are included in the LOCA, FHA, and CRDA radiological analyses presented in Section 9.2. Plant specific analyses for NUREG-0737, Item II.B.2, post-accident mission doses have been performed. The results of this assessment are accounted for in the plant radiation protection program.

8.4 RADIATION SOURCES IN REACTOR COOLANT

Radiation sources in the reactor coolant include activation products, activated corrosion products and fission products.

8.4.1 Coolant Activation Products

During reactor operation, the coolant passing through the core region becomes radioactive as a result of nuclear reactions. The coolant activation, especially N-16 activity, is the dominant source in the turbine building and in the lower regions of the drywell. The activation of the water in the core region is in approximate proportion to the increase in thermal power. [[

]] The activation products in the steam from EPU are bounded by the existing design basis concentration. The margin in the design basis for reactor coolant activation concentrations significantly exceeds potential increases due

to EPU. Therefore, no change is required in the activation design basis reactor coolant concentrations for EPU.

8.4.2 Activated Corrosion and Fission Products

The reactor coolant contains activated corrosion products, which are the result of metallic materials entering the water and being activated in the reactor region. Under EPU conditions, the FW flow increases with power and the activation rate in the reactor region increases with power. The net result is an increase in the activated corrosion product production.

The total activated corrosion product activity is approximately 3% higher than the original design basis activity as a consequence of EPU. However, the sum of the activated corrosion product activity and the fission product activity remains a small fraction (<3%) of the total design basis activity.

Fission products in the reactor coolant are separable into the products in the steam and the products in the reactor water. The activity in the steam consists of noble gases released from the core plus carryover activity from the reactor water. This activity is the noble gas offgas that is included in Browns Ferry design. The calculated offgas rates for EPU after thirty minutes decay are well below the original design basis of 0.35 curies/sec. Therefore, no change is required in the design basis for offgas activity for EPU.

The fission product activity in the reactor water, like the activity in the steam, is the result of minute releases from the fuel rods. Fission product activity levels in the reactor water were calculated to be higher than previous calculated data, increasing ≤ 13% from current values due to EPU. These activity levels remain a fraction (< 2%) of the design basis fission product activity. Therefore, the activated corrosion product and fission product activities design bases are unchanged for EPU.

For the EPU, normal radiation sources increase slightly. Shielding aspects of Browns Ferry were conservatively designed for total normal radiation sources. Thus, the increase in radiation sources does not affect radiation zoning or shielding and plant radiation area procedural controls will compensate for increased normal radiation sources.

8.5 RADIATION LEVELS

8.5.1 Normal Operation

For EPU, normal operation radiation levels increase slightly. For conservatism, many aspects of Browns Ferry were originally designed for higher-than-expected radiation sources. Thus, the increase in radiation levels does not affect radiation zoning or shielding in the various areas of Browns Ferry because it is offset by conservatism in the original design, source terms used and analytical techniques.

The normal operating doses are generally based on dose rate measurements at various locations during plant operation at OLTP conditions. The normal doses specified for OLTP conditions are increased by 20% with the exception of four zones where additional data was available to

demonstrate that the normal doses specified for these areas contained sufficient margin to account for a 20% increase in the observed dose rate. The increased normal radiation doses are evaluated and determined to have no adverse effect on safety-related plant equipment, as indicated in Sections 10.3.1 and 10.3.2. Individual worker exposures can be maintained within acceptable limits by controlling access to radiation areas using the site ALARA program. Procedural controls compensate for increased radiation levels. In addition, Browns Ferry has previously implemented zinc injection and noble metal chemical addition to limit the increase in normal radiation doses from the implementation of HWC.

8.5.2 Normal Post-Operation

Post-operation radiation levels in most areas of Browns Ferry are expected to increase by no more than the percentage increase in power level. In a few areas near the reactor water piping and liquid radwaste equipment, the increase could be slightly higher. Regardless, individual worker exposures can be maintained within acceptable limits by controlling access to radiation areas using the site ALARA program. Procedural controls compensate for increased radiation levels. Radiation measurements will be made at selected power levels to ensure the protection of personnel.

8.5.3 Post Accident

The 100-day post-accident radiation doses are expected to increase by 12% or less at EPU RTP compared to the post-accident doses for CLTP conditions. For some areas, the post-accident doses specified for CLTP conditions are bounding for the EPU conditions. The increased post-accident radiation doses have no adverse effect on safety-related plant equipment as indicated in Sections 10.3.1 and 10.3.2. Plant specific analyses for NUREG-0737, Item II.B.2, post-accident mission doses have been performed.

Section 9.2 addresses the accident doses for the Main Control Room.

8.6 NORMAL OPERATION OFF-SITE DOSES

The primary sources of normal operation offsite doses are (1) airborne releases from the offgas system and (2) gamma shine from Browns Ferry turbines..

The increase in activity levels is proportional to the percentage increase in core thermal power. The TS limits implement the guidelines of 10 CFR 50, Appendix I. EPU does not involve significant increases in the offsite dose from noble gases, airborne particulates, iodine, tritium, or liquid effluents. Present offsite radiation levels form a negligible portion of background radiation. Therefore, the normal offsite doses are not significantly affected by operation at EPU and remain below the limits of 10 CFR 20, 10 CFR 50, Appendix I, and 40 CFR 190.

Browns Ferry has implemented zinc injection and noble metal chemical addition to limit the increase in normal radiation doses from the implementation of HWC. The EPU increase in steam flow results in higher levels of N-16 and other activation products in the turbines. The increased flow rate and velocity, which result in shorter travel times to the turbine and less radioactive decay in transit, lead to higher radiation levels in and around the turbines and offsite

skyshine dose. Any discernible increase in radiation as a result of increased N-16 would be measured on the site environmental TLD stations. Past history from these TLD stations for the implementation of HWC and the 5% power increase has not shown any discernible increase in radiation at offsite locations. Therefore, it is unlikely that the increase in N-16 source term due to EFU results in any measurable dose to the public.

9. REACTOR SAFETY PERFORMANCE EVALUATIONS

9.1 REACTOR TRANSIENTS

The UFSAR evaluates the effects of a wide range of potential plant AOOs, commonly referred to as transients. Disturbances to Browns Ferry caused by a malfunction, a single equipment failure or an operator error are investigated according to the type of initiating event per Chapter 14 of the Browns Ferry UFSAR. Appendix E of BLTR1 (Reference 1) identifies the limiting events to be considered in each category of events. The generic guidelines also identify the analytical methods, the operating conditions that are to be assumed, and the criteria that are to be applied.

The following paragraphs address each of the limiting events and provide a summary of the resulting transient safety analysis. The results given here are for a representative core, and show the overall capability of the design to meet all transient safety criteria for EPU operation.

Table E-1 of BLTR1 provides the specific events to be analyzed for EPU, the power level to be assumed, and the computer models to be used. The transients that are not listed in Table E-1 are generally milder versions of the analyzed events. [[
]]

The reactor operating conditions that apply most directly to the transient analysis are summarized in Table 9-1. They are compared to the conditions used for the UFSAR analyses and a typical Unit 2 reload core analysis. An equilibrium core of GE14 fuel was used as the representative fuel cycle for the EPU transient analyses. Most of the transient events are analyzed at the full power and maximum allowed core flow operating point on the power/flow map, shown in Figure 2-1. Direct or statistical allowance for 2% power uncertainty is included in the analysis. [[
]] The SLMCPR in Table 9-1 was used to calculate the OLMCPR value(s) required for the analyzed events. For all pertinent events, one MSRV is considered to be OOS, and the MSRV setpoint tolerance is considered to be +3%. A discussion of other equipment OOS options is provided in Section 1.3.2.

The transient events of each category from Table E-1 of BLTR1 were analyzed. Their inputs and results revise the licensing basis for the transient analysis to the EPU RTP. The overpressurization analysis is provided in Section 3.2. Other transient analysis results for the full EPU RTP condition are provided in Table 9-2. The most limiting transient event results are shown in Figures 9-1 through 9-4. As shown in the table and figures, no change to the basic characteristics of any of the limiting events is caused by EPU.

The severity of transients at less than rated power are not significantly affected by the EPU, because of the protection provided by the ARTS power and flow dependent limits.

The historical 25% of RTP value for the TS Safety Limit, some thermal limits monitoring LCOs thresholds, and some SRs thresholds is based on [[ ]] analyses (evaluated up to ~50% of original RTP) applicable to the plant design with highest average bundle power (the BWR6) for all of the BWR product lines. As originally licensed, the highest average bundle power (at 100%

RTP) for any BWR6 is 4.8 MWt/bundle. The 25% RTP value is a conservative basis, as described in the TS, [[

]]

9.1.1 Fuel Thermal Margin Events

[[

]]

9.1.2 Power and Flow Dependent Limits

The operating limit MCPR, LHGR, and/or MAPLHGR thermal limits are modified by a flow factor when Browns Ferry is operating at less than 100% core flow. This flow factor is primarily based upon an evaluation of the slow recirculation increase event. [[

]]

Similarly, the thermal limits are modified by a power factor when Browns Ferry is operating at less than 100% power. [[

]]

9.1.3 Loss of Feedwater Flow Event

For the LOFW event, adequate transient core cooling is provided by maintaining the water level inside the core shroud above the TAF. A plant specific analysis was performed at EPU conditions. This analysis assumed failure of the HPCI system and used only the RCIC system to restore the reactor water level. Because of the extra decay heat from EPU, slightly more time is required for the automatic systems to restore water level. Operator action is only needed for long-term plant shutdown. The results of the LOFW analysis show that the minimum water level inside the shroud is 58 inches above the TAF at EPU conditions. After the water level is restored, the operator manually controls the water level, reduces reactor pressure, and initiates RHR shutdown cooling. This sequence of events does not require any new operator actions or shorter operator response times. Therefore, the operator actions for a LOFW transient do not significantly change for EPU.

As discussed in Section 3.8, an operational requirement is that the RCIC system restores the reactor water level while avoiding ADS timer initiation and MSIV closure activation functions associated with the low-low-low reactor water level setpoint (Level 1). This requirement is intended to avoid unnecessary initiations of these safety systems, and is not a safety-related function. The results of the LOFW analysis for Browns Ferry show that the nominal Level 1 setpoint trip is avoided.

The loss of one FW pump event only addresses operational considerations to avoid reactor scram on low reactor water level (Level 3). This requirement is intended to avoid unnecessary reactor shutdowns. Because the MBLLLA region is extended along the existing upper boundary to the EPU RTP, there is no increase in highest flow control line for EPU. Therefore, the results of the loss of one FW pump event are insignificant. A plant-specific evaluation confirms that the level is maintained above Level 3.

9.2 DESIGN BASIS ACCIDENTS

This section addresses the radiological consequences of DBAs.

Plant specific radiological dose consequence analyses have been performed for the DBAs at EPU conditions utilizing AST in accordance with 10 CFR 50.67. The results of these analyses for the LOCA, the CRDA, the FHA, and the MSLB are provided in the AST license amendment submittal (Reference 3). The calculated doses remain within applicable regulatory acceptance criteria.

The ILBA analysis was also performed at EPU conditions utilizing AST. The radiological consequences of this event remain bounded by the other postulated line breaks.

9.3 SPECIAL EVENTS

9.3.1 Anticipated Transient Without Scram

The overpressure evaluation includes consideration of the most limiting RPV overpressure case. [[

]]

A LOOP does not result in a reduction in the RHR SPC capability relative to the MSIVC and PRFO cases. With the same RHR SPC capability, the containment response for the MSIVC and PRFO cases bound the LOOP case.

Browns Ferry meets the ATWS mitigation requirements defined in 10 CFR 50.62:

a) Installation of an ARI system;

b) Boron injection equivalent to 86 gpm; and

c) Installation of automatic RPT logic (i.e., ATWS-RPT).

In addition, plant-specific ATWS analysis is performed to ensure that the following ATWS acceptance criteria are met

a) Peak vessel bottom pressure less than ASME Service Level C limit of 1500 psig;

b) Peak suppression pool temperature less than 281°F (Wetwell shell design temperature); and

c) Peak containment pressure less than 56 psig (Drywell design pressure).

The limiting events for the acceptance criteria discussed above are the PRFO event and the MSIVC event.

The ATWS analyses have been performed for 105% OLTP and for EPU RTP to demonstrate the effect of the EPU on the ATWS acceptance criteria. There is no change to the assumed operator actions for the EPU ATWS analysis, and there is no change to the required hot shutdown boron weight. The key inputs to the Browns Ferry ATWS analysis are provided in Table 9-3.

The analysis was performed using the ODYN code. The results of the analysis are provided in Table 9-4.

The results of the ATWS analysis meet the above ATWS acceptance criteria. Therefore, the response to an ATWS event at EPU is acceptable.

Coolable core geometry is ensured by meeting the 2200°F peak cladding temperature and the 17% local cladding oxidation acceptance criteria of 10 CFR 50.46. [[

]]

9.3.1.1 ATWS with Core Instability

The effects of an ATWS with core instability event occur at natural circulation following a recirculation pump trip. It is initiated at approximately the same power level as before EPU, because the MELLLA upper boundary is not increased. The core design necessary to achieve EPU operations may affect the susceptibility to coupled thermal-hydraulic/neutronic core oscillations at the natural circulation condition, but would not significantly affect the event progression.

Several factors affect the response of an ATWS instability event, including operating power and flow conditions and core design. The limiting ATWS core instability evaluation presented in References 4 and 5 was performed for an assumed plant initially operating at OLTP and the MELLLA minimum flow point. [[

]] EPU allows plants to increase their operating thermal power but does not allow an increase in control rod line. [[

]] The conclusion of Reference 5 and the associated NRC SER that the analyzed operator actions effectively mitigate an ATWS instability event are applicable to the operating conditions expected for EPU.

Initial operating conditions of FWHOOS and FFWTR do not significantly affect the ATWS instability response reported in References 4 and 5. The limiting ATWS evaluation assumes that all FW heating is lost during the event and the injected FW temperature approaches the lowest achievable main condenser hot well temperature. The minimum condenser hot well temperature is not affected by FWHOOS or FFWTR. Thus, as compared to the event initiated from a normal FW temperature condition, the event initiated from either the FWHOOS or FFWTR condition would have less moderator reactivity insertion based on a smaller temperature difference between the initial and final FW temperatures. Therefore, the power oscillation for FWHOOS or FFWTR is expected to be no worse than for the normal temperature condition.

9.3.2 Station Blackout

SBO was reevaluated using the guidelines of NUMARC 87-00. The plant response to and coping capabilities for an SBO event are affected slightly by operation at EPU RTP, due to the increase in the initial power level and decay heat. Decay heat was conservatively evaluated

assuming end-of-cycle (24-month) and GE14 fuel. There are no changes to the systems and equipment used to respond to an SBO, nor is the required coping time changed.

Areas containing equipment necessary to cope with an SBO event were evaluated for the effect of loss-of-ventilation due to an SBO. The evaluation shows that equipment operability is bounded due to conservatism in the existing design and qualification bases. The battery capacity remains adequate to support HPCI/RCIC operation after EFU. Adequate compressed gas capacity exists to support the MSRV actuations.

The current CST inventory reserve (135,000 gal.), for HPCI/RCIC use, ensures that adequate water volume is available to remove decay heat, depressurize the reactor, and maintain reactor vessel level above the top of active fuel (approximately 122,000 gal. required). Peak containment pressure and temperature remain within design bases. Consistent with the DBA-LOCA condition, the required NPSH margin for the RHR pumps has been evaluated (see Section 4.2.5) and a component acceptability review has been completed (see Section 3.9).

Based on the above evaluations, Browns Ferry continues to meet the requirements of 10 CFR 50.63 after the EPU.

9.4 REFERENCES

1. GE Nuclear Energy, "Generic Guidelines for General Electric Boiling Water Reactor Extended Power Uprate," (ELTR1), Licensing Topical Reports NEDC-32424P-A, Class III (Proprietary), February 1999; and NEDO-32424, Class I (Non-proprietary), April 1995.

2. GE Nuclear Energy, "Generic Evaluations of General Electric Boiling Water Reactor Extended Power Uprate,"(ELTR2), Licensing Topical Reports NEDC-32523P-A, Class III, February 2000; NEDC-32523P-A, Supplement 1 Volume I, February 1999; and Supplement 1 Volume II, April 1999.

3. TVA Letter, "Browns Ferry Nuclear Plant (BFN) - Units 1, 2, and 3 - License Amendment - Alternative Source Term," dated July 31, 2002, R08 020731 649, including Tech. Spec. No. 405 (TVA-BFN-TS-405).

4. GE Nuclear Energy, "Qualification of the One-Dimensional Core Transient Model (ODYN) for Boiling Water Reactors (Supplement 1 - Volume 4)," Licensing Topical Report NEDC-24154P-A, Revision 1, Supplement 1, Class III, February 2000.

5. GE Nuclear Energy, "Mitigation of BWR Core Thermal-Hydraulic Instabilities in ATWS," NEDO-32164, December 1992.

Table 9-1

Browns Ferry Parameters Used for Transient Analysis

Parameter	Cycle[1] Analysis	EPU
Rated Thermal Power (MWt)	3458	3952
Analysis Power (% Rated)	100 / 102 [2]	100 / 102 [2]
Analysis Dome Pressure (psia)	1050	1050
Analysis Turbine Pressure (psia)	974 [3]	973 [4]
Rated Vessel Steam Flow (Mlb/hr)	14.150	16.440
Analysis Steam Flow (% Rated)	100.0	100.0
Rated Core Flow (Mlb/hr)	102.5	102.5
Rated Power Core Flow Range (% Rated)	81 - 105	99 - 105
Analysis Core Flow[5] (Mlb/hr)	107.6	107.6
Normal FW Temperature (°F)	381.7	394.5
FW Temperature Reduction (ΔT °F)	54.7	54.7
Steam Bypass Capacity (% Rated Steamflow)	25.2	21.7
Reactor Low Water Level 3 Scram (inches above vessel zero)	518	518
Number of MSRVs assumed in the analysis	12 [6]	12 [6]
MCPR Safety Limit	1.08	1.08

1 Unit 2 Reload 12 (Cycle 13) results provided for comparison.

2 GEMINI analysis at 100%, REDY analysis at 102%.

3 Reload analysis value based on current measured steam line pressure drop.

4 EPU input value represents the conservative value (lowest steamline pressure loss for any unit).

5 All analysis at maximum core flow unless explicitly noted otherwise.

6 A low-pressure bank setpoint MSRV is assumed OOS for transient analysis.

Table 9-2

Browns Ferry Transient Analysis Results

Event	Peak Neutron Flux (% of Rated EPU)	Peak Heat Flux (% of Rated EPU)	ΔCPR	MCPR Operating Limit	
				Option A	Option B
Generator Load Rejection with Bypass Failure	680	133	0.26	1.42	1.39
Turbine Trip With Bypass Failure	673	132	0.26	1.42	1.39
FW Controller Failure Max Demand	629	136	0.26	1.41	1.38
FW Controller Failure Max Demand - TBOOS	742	141	0.31	1.47	1.44
Pressure Regulator Downscale Failure	(1)	(1)	(1)	(1)	(1)
Loss of FW Heating	(2)	(2)	0.13	1.21	
Inadvertent HPCI Actuation	112	109	0.06	(3)	(3)
Rod Withdrawal Error	(2)	(2)	0.19 (4)	1.27	
Slow Recirculation Increase	(5)	(5)	(5)	$MCPR_f$	
Fast Recirculation Increase	181	94	0.14	(6)	(6)
Generator Load Rejection with Bypass	590	129	0.22	1.37	1.34
MSIV Closure - All Valves	123	100	0.03	(7)	(7)
MSIV Closure - One Valve	130	106	0.06	(7)	(7)
Loss of FW Flow	100	100	(5)	(5)	(5)
Loss of One FW Pump	100	100	(5)	(5)	(5)

1. Not required based on UFSAR 14.5.2.8.
2. Peak neutron flux and peak heat flux are not reported for the slow transients.
3. HPCI is bounded by Loss of FW Heating.
4. With rod block monitor setpoint of 111 %.
5. Not applicable.
6. Fast recirculation increase is bounded by off-rated limits.
7. Bounded by the Generator Load Rejection with Bypass Failure.

Table 9-3

Browns Ferry Key Inputs for ATWS Analysis

Input Variable	CLTP	EPU
Reactor power (MWt)	3458	3952
Reactor dome pressure (psia)	1050	1050
MSRV capacity (13 valves) (Mlbm/hr)	11.31	11.31
High pressure ATWS-RPT (psig)	1177	1177
Number of MSRVs Out-of-service (OOS)	1	1

Table 9-4

Browns Ferry ATWS Analysis Results

Parameters	CLTP	EPU
Peak vessel bottom pressure (psig)	1368	1484
Peak suppression pool temperature (°F)	214.6	214.1
Peak containment pressure (psig)	21.7	21.4
Peak cladding temperature (°F)	1476	1453
Local cladding oxidation (%)	<17	<17

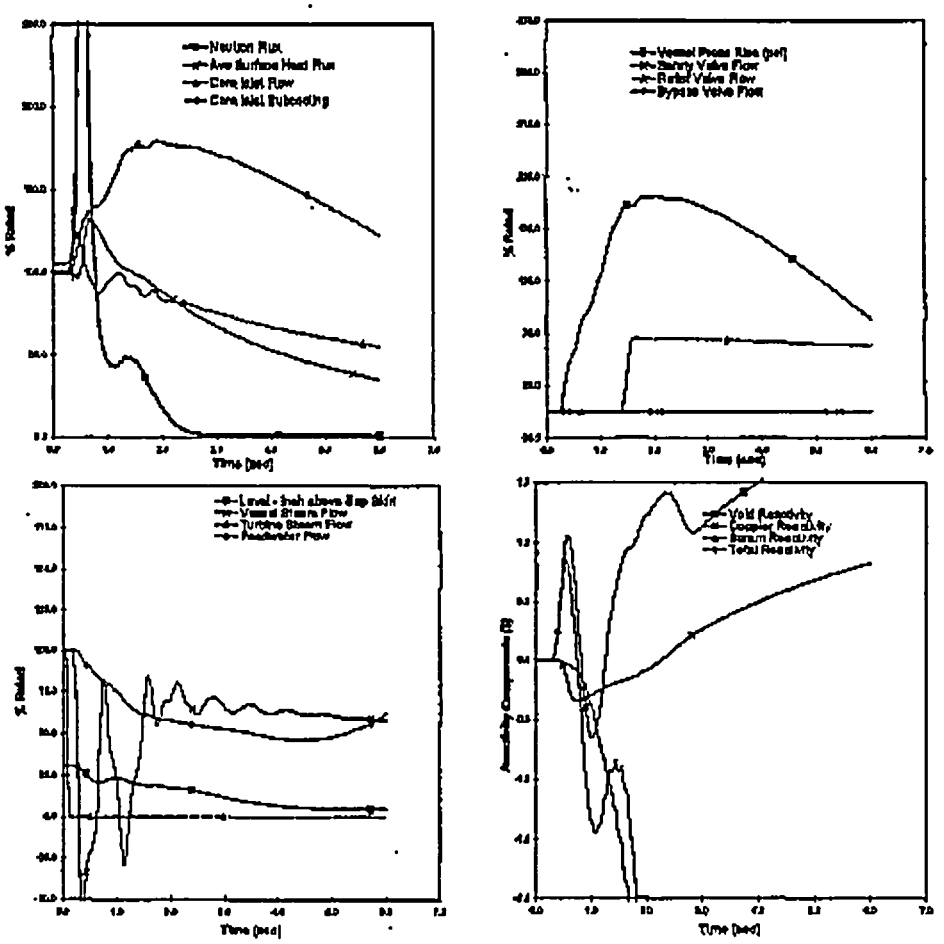

Figure 9-1
Browns Ferry Turbine Trip with Bypass Failure
(@ 100% EPU RTP and 105% Core Flow)

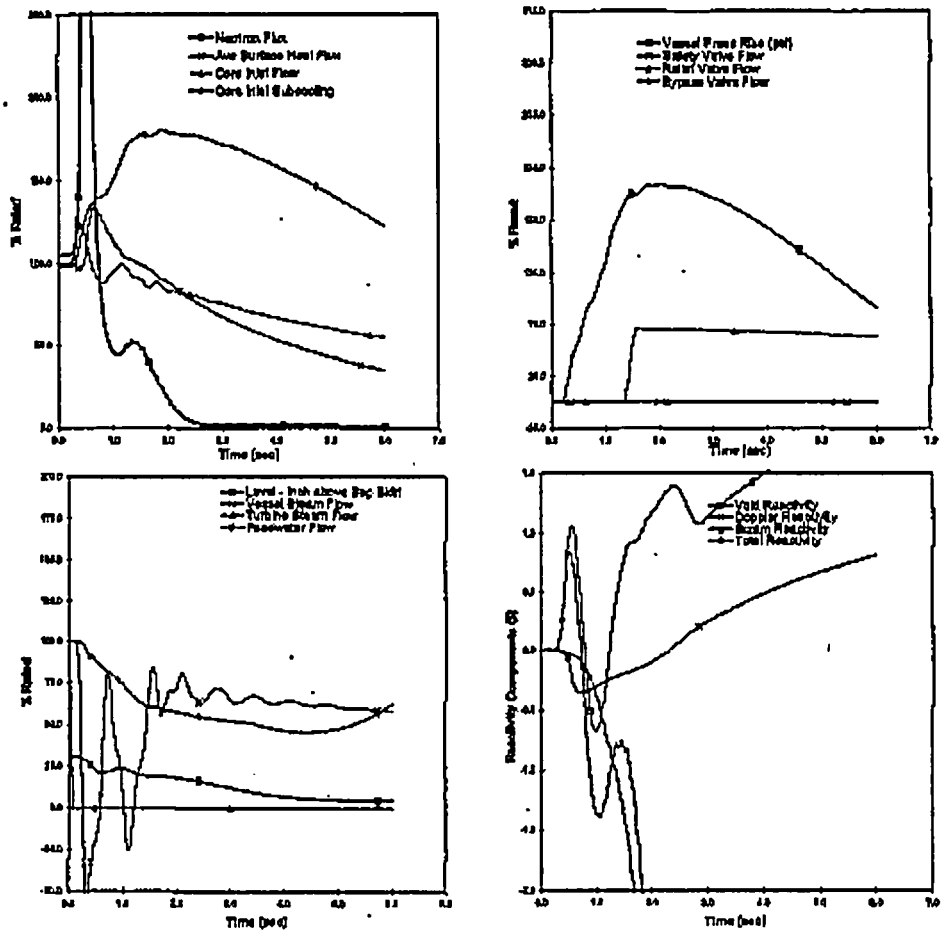

Figure 9-2
Browns Ferry Generator Load Rejection with Bypass Failure
(@ 100% EPU RTP and 105% Core Flow)

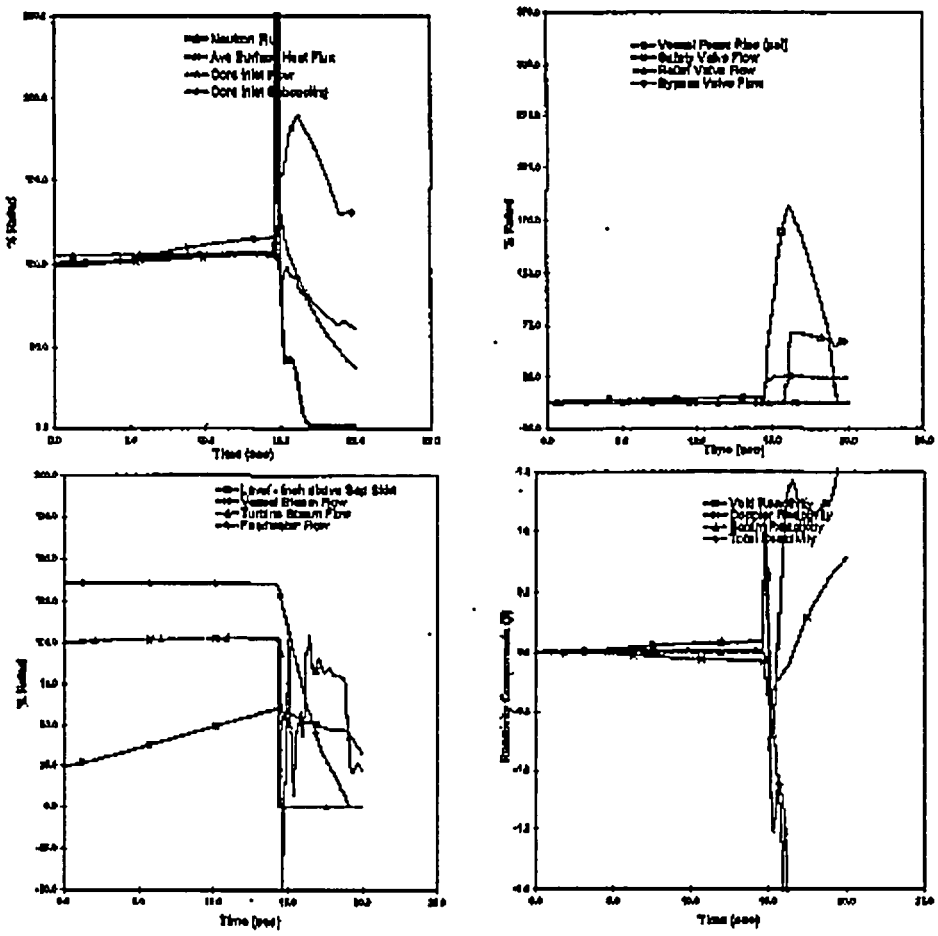

Figure 9-3
Browns Ferry Feedwater Controller Failure - Maximum Demand
(@ 100% EPU RTP, 105% Core Flow and 394.5°F FW Temp.)

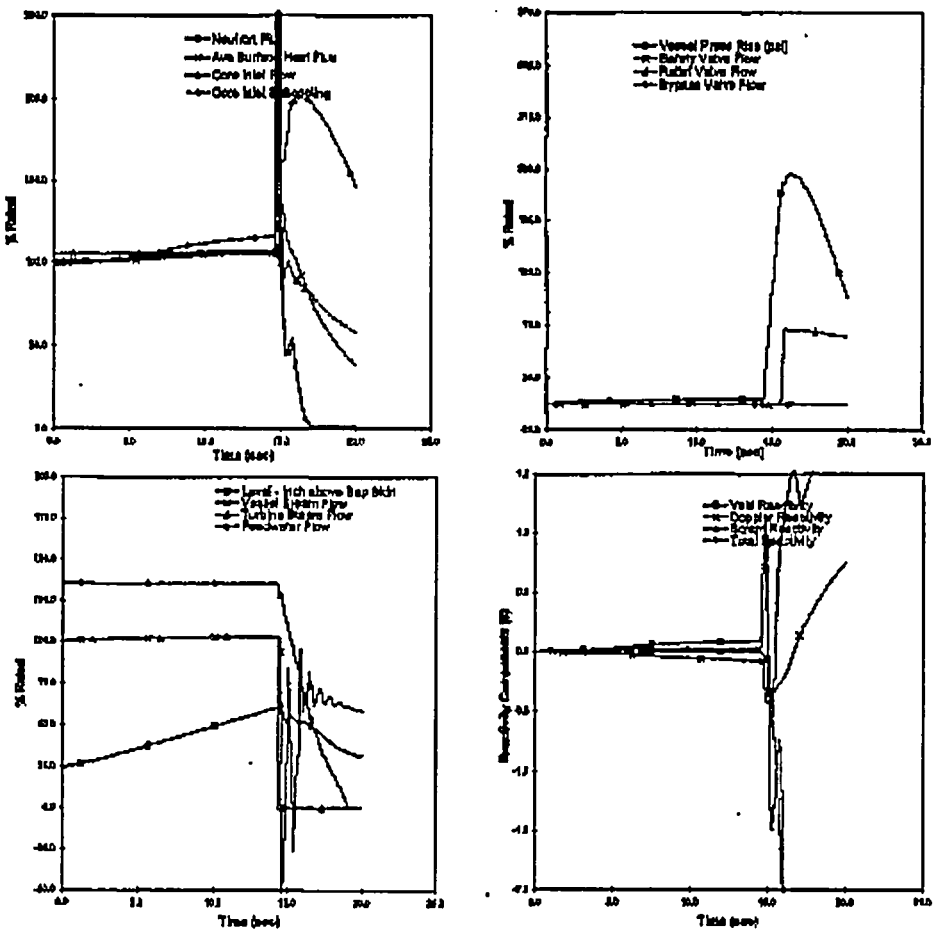

Figure 9-4
Browns Ferry Feedwater Controller Failure - Maximum Demand with Bypass OOS
(@ 100% EPU RTP, 105% Core Flow and 394.5°F FW Temp.)

10. OTHER EVALUATIONS

10.1 HIGH ENERGY LINE BREAK

HELBs are evaluated for their effects on EQ. Operation at the EPU level requires an increase in the steam and FW flows, which results in a slight increase in downcomer subcooling. This, in turn, results in a small increase in the mass and energy release rates following a HELB. Evaluation of these piping systems determined that there is no change in postulated break locations. The EPU affects on the HELB mass and energy releases are documented in Table 10-1.

10.1.1 Temperature, Pressure and Humidity Profiles

The HELB analysis evaluation was made for all systems evaluated in the UFSAR. The equipment and systems that support a safety-related function are also qualified for the environmental conditions imposed upon them.

At the EPU power level, some of the mass and energy releases for HELBs outside the primary containment increase, potentially causing the subcompartment pressure and temperature profiles to increase, as shown in Table 10-1. The relative humidity change is negligible. In most cases, the increase in the blowdown rate is small and the resulting profiles are bounded by the existing profiles due to the conservatism in the current HELB analyses, as discussed for each break.

10.1.2 Main Steam Line Breaks

[[

]] However, the intermediate size MSLB is defined as the largest break that the MSL high flow sensors do not detect and isolate (144% of rated flow). Because rated steam flow increases, the mass flow rate for the intermediate size MSLB also increases. The mass and energy releases for the intermediate size MSLB were re-analyzed at EPU conditions. Because the Reactor Building pressures and temperatures for the double-ended MSLB remain bounding, there is no effect on the MS HELB evaluation due to the increased flow rate for the intermediate size MSLB.

10.1.3 Feedwater Line Break

The CLTP mass and energy releases for FW line breaks are affected by changes in the FW system including increased FW flow rate and modifications to the condensate, condensate booster, and FW pumps. The mass and energy releases for double-ended breaks and critical cracks in the FW lines were re-analyzed at EPU conditions. The reactor building pressure, temperature and relative humidity profiles used for EQ were determined to be bounding for EPU conditions.

10.1.4 HPCI Steam Line Breaks

Because there is no increase in the reactor dome pressure relative to the CLTP analysis, the mass flow rates for HPCI steam line breaks do not increase. Therefore the CLTP analysis of the HPCI steam line breaks is bounding for EPU conditions.

10.1.5 RCIC Steam Line Breaks

Because there is no increase in the reactor dome pressure relative to the current analysis, the mass flow rates for RCIC steam line breaks do not increase. Therefore the current analysis of the RCIC steam line breaks is bounding for EPU conditions.

10.1.6 RWCU System Line Break

An evaluation of the mass and energy releases for RWCU line breaks at CLTP and EPU conditions indicated that the EPU mass releases for RWCU line breaks increased by 4.4% based on a comparison of the critical flow characteristics at CLTP and EPU conditions. The enthalpy of the fluid released decreased by 1% due to increased subcooling in the reactor recirculation fluid. The reactor building pressure, temperature and relative humidity profiles at EPU conditions were evaluated for the effect on equipment qualification as discussed in Section 10.3.

10.1.7 Pipe Whip and Jet Impingement

Pipe whip and jet impingement loads resulting from high energy pipe breaks are directly proportional to system pressure. Operation at the EPU 105% core flow condition requires a small increase in RRS pump discharge pressure. The effect of this pressure increase on the RRS discharge piping has been evaluated and confirms that the existing pipe whip or jet impingement loads on HELB targets or pipe whip restraints are bounding for the EPU condition. Additionally, a review of pipe stress calculations determined that the FW temperature increase associated with EPU conditions does not result in pipe stress levels above the thresholds required for postulating HELBs, except at locations currently evaluated for breaks. As a result, EPU conditions do not result in new HELB locations nor are the existing HELB evaluations of pipe whip restraints and jet targets affected.

10.1.8 Internal Flooding from HELB Line Breaks

The only high energy liquid filled lines in the reactor building are RWCU and FW. The mass releases for the critical break flow for the RWCU breaks were calculated using the break flow increase due to the lower EPU RWCU enthalpy. The resulting increases in flood level determined for the affected flood areas were insignificant (≤ 1"). FW system hardware changes have been evaluated and the flooding rate from a FW line break is acceptable. The water level in the hotwells, the existing drainage systems, and the flood barriers are not changing; therefore, the existing FW line break flooding analysis is valid for the EPU conditions.

10.2 MODERATE ENERGY LINE BREAK

MELBs are evaluated for their effects on EQ.

System design limits (design pressure) used as input to the MELB flooding analyses are not changed by EPU. Therefore, the MELB internal flooding evaluations are not affected by the EPU and the design change process ensures continued evaluation of all changes for effect on MELB flooding.

10.3 ENVIRONMENTAL QUALIFICATION

Safety-related components are required to be qualified for the environment in which they are required to operate. Table 10-2 provides a listing of the parameters used in EQ.

10.3.1 Electrical Equipment

The safety-related electrical equipment was reviewed to ensure the existing qualification for the normal and accident conditions expected, in the area where the devices are located, remain adequate.

10.3.1.1 Inside Containment

EQ for safety-related electrical equipment located inside the containment is based on MSLB and/or DBA/LOCA conditions and their resultant temperature, pressure, humidity and radiation consequences, and includes the environments expected to exist during normal plant operation. Normal temperatures are expected to increase slightly, but remain bounded by the normal temperatures used in the EQ analyses. The post-accident peak temperature and pressure do not significantly increase for EPU. The long-term post-accident temperatures inside containment increase. However, the increase in long-term post-accident temperatures was determined not to adversely affect the qualification of safety-related electrical equipment.

The current radiation levels under normal plant conditions were conservatively evaluated to increase in proportion to the increase in reactor thermal power. The accident radiation levels increase by < 12% above the CLTP levels. The total integrated doses (normal plus accident) for EPU conditions were determined not to adversely affect qualification of the equipment located inside containment. The increased radiation doses resulted in a reduction of the radiation life of some solenoids located inside containment. However, the qualified life based on thermal aging is shorter than the radiation life for these solenoids. Therefore, the equipment qualified life was not reduced due to the increased radiation doses.

10.3.1.2 Outside Containment

Accident temperature, pressure, humidity environments, and flood levels used for qualification of equipment located in harsh environments outside containment result from an MSLB, or other HELBs, whichever is limiting for each plant area. The existing HELB pressure profiles were determined to be bounding for EPU conditions. The peak HELB temperatures at EPU RTP are bounded by the existing values used for equipment qualification. The temperature and humidity profiles that are not bounded by the existing conditions were re-evaluated and do not adversely affect the qualification of safety-related electrical equipment. The accident temperature resulting from a LOCA/MSLB inside containment increased for some reactor building areas due to the

additional heat load resulting from the increase in drywell and wetwell temperatures. However, the increase in long-term post-accident temperatures was evaluated and determined not to adversely affect the qualification of safety-related electrical equipment. The normal temperature, pressure, and humidity conditions do not change as a result of EPU. The current radiation levels under normal plant conditions were conservatively evaluated to increase in proportion to the increase in reactor thermal power. The accident radiation levels increase by < 12% above the CLTP levels. The total integrated doses (normal plus accident) for EPU conditions were evaluated and determined not to adversely affect qualification of the equipment located outside of containment.

10.3.2 Mechanical Equipment With Non-Metallic Components

The changes to normal and post accident ambient conditions for safety-related equipment, as a result of EPU conditions, are discussed in Section 10.3.1. Reevaluation of the safety-related mechanical equipment with non-metallic components identified some equipment potentially affected by the EPU conditions. These effects were evaluated and determined not to have an adverse effect on the functional capability of non-metallic components in the mechanical equipment both inside and outside containment.

10.3.3 Mechanical Component Design Qualification

The process fluid operating conditions of equipment/components (pumps, heat exchangers, etc.) in certain systems are affected by operation at EPU due to slightly increased temperatures, pressure, and in some cases, flow. The effects of increased fluid induced loads on safety-related components are described within Sections 3 and 4.1. Increased nozzle loads and component support loads, due to the revised operating conditions, were evaluated within the piping assessments within Section 3. These increased loads are insignificant, and become negligible (i.e., remain bounded) when combined with the governing dynamic loads. Therefore, the mechanical components and component supports are adequately designed for EPU conditions.

10.4 TESTING

Compared to the initial startup program, [[ ]], EPU requires only a limited subset of the original startup test program. As applicable to this plant's design, testing for EPU is consistent with the descriptions in Section 5.11.9 and Appendix L, Section L.2 of ELTR1. Specifically, the following testing will be performed during the initial power ascension steps for EPU:

1. Testing will be performed in accordance with the TS Surveillance Requirements on instrumentation that is re-calibrated for EPU conditions. Overlap between the IRM and APRM will be assured.
2. Steady-state data will be taken during power ascension beginning at 90% CLTP power and continuing at each EPU power increase increment. This data will allow system performance parameters to be projected through the EPU power ascension.

3. EPU power increases above the 100% CLTP will be made along an established flow control/rod line in increments of equal to or less than 5% power. Steady-state operating data, including fuel thermal margin, will be taken and evaluated at each step. Routine measurements of reactor and system pressures, flows, and vibration will be evaluated from each measurement point, prior to the next power increment. Radiation measurements will be made at selected power levels to ensure the protection of personnel.
4. Control system tests will be performed for the reactor FW/reactor water level controls, pressure controls, and recirculation flow controls, if applicable. These operational tests will be made at the appropriate plant conditions for that test at each of the power increments, to show acceptable adjustments and operational capability.
5. Testing will be done to confirm the power level near the turbine first-stage scram bypass setpoint.
6. A test specification is being prepared which identifies the EPU tests, the associated acceptance criteria and the appropriate test conditions. All testing will be done in accordance to written procedures as required by 10 CFR 50, Appendix B, Criterion XI.

The same performance criteria will be used as in the original power ascension tests, unless they have been replaced by updated criteria since the initial test program. [[

]]

For EPU, Browns Ferry does not intend to perform large transient testing involving an automatic scram from a high power. Transient experience at high powers at operating BWR plants has shown a close correlation of the plant transient data to the evaluated events. The operating history of Browns Ferry demonstrates that previous transient events from full power are within expected peak limiting values. The transient analyses demonstrate that safety criteria are met, and that this uprate does not cause any previous non-limiting events to become limiting. Based on the similarity of plants, past transient testing, past analyses, and the evaluation of test results, the effects of the EPU RTP level can be analytically determined on a plant specific basis. No new systems or features were installed for mitigation of rapid pressurization anticipated operational occurrences for this EPU. A scram from high power level results in an unnecessary and undesirable transient cycle on the primary system. Therefore, additional transient testing involving a scram from high power levels is not justifiable. Should any future large transients occur, Browns Ferry procedures require verification that the actual plant response is in accordance with the predicted response. Plant event data recorders are capable of acquiring the necessary data to confirm the actual versus expected response.

Further, the important nuclear characteristics required for transient analysis are confirmed by the steady state physics testing. Transient mitigation capability is demonstrated by other tests required by the TS. In addition, the limiting transient analyses are included as part of the reload licensing analysis.

10.4.1 Recirculation Pump Testing

Vibration testing of the recirculation pumps is not required, because there is no change in the maximum core flow. To maintain the same core flow with the increased core pressure drop (due to an increase in steam production), recirculation flow (drive flow) increases slightly (< 3%).

The "containment noise" observed in a BWR/4 – 251 in 1994 is not expected at Browns Ferry. At that plant, an increase in containment noise and vibration levels during plant operation was observed at increased recirculation pump speeds. Based on test results, the utility concluded that the increased noise was a direct result of the RHR check valve not being properly seated. The testing demonstrated that the containment noise levels were greatly attenuated when the RHR check valve was properly seated. Thus, this phenomenon is unrelated to EPU and no containment noise is expected due to EPU.

10.4.2 10 CFR 50 Appendix J Testing

The plant 10 CFR 50 Appendix J test program is required by the Technical Specifications. This test program periodically pressurizes the containment (Type A test), the containment penetrations (Type B test), and the containment isolation valves and test boundary (Type C tests) to the calculated peak containment pressure (P_a), and measures leakage. Resulting from the EPU, P_a changes to 48.5 psig, as shown in Table 4-1. Therefore, the 10 CFR 50 Appendix J test program is revised to reflect this calculated peak containment pressure value.

10.4.3 Main Steam Line, Feedwater, and Reactor Recirculation Piping Flow Induced Vibration Testing

Piping for the MS, FW and RRS will be monitored for vibrations during initial plant operation for the new EPU operating conditions. This test program will show that the vibration of these piping systems is acceptable at the EPU conditions.

The MS and FW piping systems are normally affected by an EPU, because their mass flow rates and operating pressures usually increase at EPU. The mass flow rates in these systems typically increase in proportion to the EPU power level increase. The flow induced vibration levels simultaneously increase in proportion to the increase in the fluid density and the square of the fluid velocity at these higher mass flow rates.

There is a small recirculation drive flow increase for EPU, and thus, vibration monitoring will also be performed on the RRS piping.

The MS, FW and RRS piping inside containment will be monitored with remote vibration sensors. Also, the MS and FW piping outside containment will be monitored with remote sensors or hand-held instruments. The vibration monitoring devices will be located on portions of the piping system determined to be most susceptible to vibration.

Acceptable vibration criteria will be established for these locations prior to testing. Vibration monitoring of these piping systems will be performed at power levels below the final, maximum extended power level. Vibration data is typically collected at 50%, 75%, 100%, 105%, 110%,

115% and 120% of OLTP. The measured vibration levels at each power level will be compared to the acceptance criteria to verify the piping is below the acceptance criteria prior to moving to the next power level. In this manner, the vibration monitoring testing can proceed as the plant operates for the first time at each new power level, and at the same time avoid the remote possibility of incurring high vibrations and damaging the plant equipment (piping), before appropriate corrective actions can take place.

10.5 INDIVIDUAL PLANT EVALUATION

PRAs are performed to evaluate the risk of plant operation.

The individual Browns Ferry Unit 2 and Unit 3 PRAs for Unit 2 and Unit 3 operation were evaluated and updated as a result of the analyses inputs, results, and modifications associated with the EPU.

To ensure that all risk-significant effects of the EPU are represented in the revised PRAs, all EPU analyses and associated plant modifications were systematically reviewed to identify their effect on the elements of a risk assessment. Specifically, the modifications associated with the EPU were reviewed with respect to their potential effect on the PRA models.

Regulatory Guide 1.174 provides the guidance framework for using PRA in risk-informed decisions for plant-specific changes to the licensing basis. The acceptance guidelines consider both the magnitude and size of the changes to CDF and LERF. The baseline and the EPU CDFs for both units are below 10^{-5} events per year and the change in CDF for both units is slightly greater than 10^{-6}. The baseline and EPU LERFs for both units are below 10^{-6} events per year and the change in LERF for both units is slightly greater than 10^{-7}.

Based on the acceptance guidelines of Regulatory Guide 1.174, the plant changes reflected in the updated PRAs are in Region II, the calculated increase in CDF is between 10^{-6} and 10^{-5} and the calculated increase in LERF is between 10^{-7} per year and 10^{-6} per year. As stated in Regulatory Guide 1.174,

- "When the calculated increase in CDF is in the range of 10^{-6} per reactor year to 10^{-5} per reactor year, applications will be considered only if it can be reasonably shown that the total CDF is less than 10^{-4} per reactor year (Region II)." As shown in Table 10-3, the total CDF for Browns Ferry remains below the guideline value of 10^{-4} per reactor year.
- "When the calculated increase in LERF is in the range of 10^{-7} per reactor year to 10^{-6} per reactor year, applications would be considered only if it can be reasonably shown that the total CDF is less than 10^{-5} per reactor year (Region II)." As shown in Table 10-3, the total LERF for Browns Ferry remains below the guideline value of 10^{-5} per reactor year.

The evaluations of the uncertainty from previous evaluations of the risk at Browns Ferry have indicated that the range factor of the CDF distribution was approximately 4.6. The current evaluation is a modification of those analyses. No new sources of uncertainty were introduced. Therefore, the range factor is not expected to increase significantly for this evaluation.

The same analytical codes used to support the baseline PRAs were used in the updates for EPU. The plant-specific MAAP models were used to support the system success criteria determination and sequence timing. The RISKMAN™ integrated computer code was used to perform the necessary data and system analyses and to represent the response of the operators and plant systems to the initiators considered.

10.5.1 Initiating Event Frequency

Thirty-five initiating event categories are considered in the baseline and updated PRAs for each unit: sixteen transient initiator categories; thirteen LOCA initiator categories; and six internal flooding initiator categories. The initiator categories for the EPU are the same as those in the baseline models.

The EPU does not result in plant equipment operation beyond the design ratings and conditions. The transient categories with the most potential to be affected by the EPU are those associated with trip set points, such as reactor scram, system isolations, and operating equipment trips. A review of these conditions concluded that the operational margins remain within values consistent with the baseline models and that changes regarding initiating event category frequencies are not required to reflect EPU conditions.

The frequency of loss of offsite power events (either "loss of 500 kV to the plant" or "loss of 500 kV to one unit") due to grid instabilities is not affected by EPU. In addition to the loss of offsite power represented by these two initiators, there is the potential that the grid is lost following the trip of a unit. For the PRA analysis approach, rapid separation of a large generating unit from the grid has the potential to cause Browns Ferry grid instability and loss of offsite power. This possibility is represented by a unique top event. A grid stability analysis has been performed, considering the increase in electrical output, to demonstrate conformance to General Design Criteria 17. In addition to the normal configuration, the analysis considers various transmission system contingencies.

The baseline PRAs identify five initiators as a result of the loss or degradation of support systems: loss of I&C bus A; loss of I&C bus B; loss of plant air; loss of RBCCW; and loss of RCW. The duty on these systems is essentially unchanged as a result of the EPU. Therefore the frequency of these initiators does not change under EPU conditions.

The nominal RPV pressure does not change at the EPU conditions. The RPV and piping monitoring programs do not change. Therefore the frequency of LOCA and internal flooding initiators does not change at the EPU conditions.

ATWS is not modeled as a separate initiating event in the Browns Ferry Unit 2 and Unit 3 PRAs. Instead, the scram function is queried for each sequence model as an integral part of the response of the plant and the operators to an initiator. RPS reliability is taken from NUREG/CR-5500. The total frequency of ATWS is determined by multiplying the frequency of the transient events by the likelihood of failure to scram. As discussed above, the frequency of occurrence of the transient initiators is conservatively assumed not to change after the modifications are

implemented. No modifications are anticipated to affect the likelihood of scram. Therefore, the frequency of ATWS is not expected to change.

The frequencies of the initiator categories in the baseline PRAs for Browns Ferry do not change in the updated Unit 2 and Unit 3 EPU PRA models. For the majority of the initiator categories, the EPU has no affect on the frequency of occurrence. The three initiator categories potentially affected (turbine trip with bypass; LOFW; and loss of all condensate) are compensated for by the expected decrease in the frequency of the categories "loss of FW" and "loss of all condensate." Use of the same initiator data in the updated models is conservative. The summary of the initiator contributions for the baseline and EPU risk models for CDF and LERF end-states is presented in Table 10-4.

10.5.2 Component and System Reliability

No increase in component failure rates is anticipated as a result of EPU conditions. Under EPU conditions, equipment operating limits, conditions, and/or ratings are not exceeded. Existing plant component monitoring programs detect degradation if it occurs and corrective action is taken in a timely manner. It is possible that EPU conditions may result in selected components requiring refurbishment or replacement more frequently; however, the functionality and reliability of components and systems is maintained at the current standard.

10.5.3 Operator Response

The effect of the EPU on operator response capabilities following an initiating event requiring safe plant shutdown was evaluated. The evaluation addressed all post initiating event actions by considering two factors: 1) the reduction in the amount of time available for the operators to complete an action, and 2) whether the reduced time available was a significant influence on the error rates estimated for the human actions in the baseline (pre- EPU) PRAs.

The decay heat produced following a reactor scram is proportional to the inventory of fission products, which is directly proportional to the power level. A reactor operating at 120% OLTP power compared to the same reactor operating at pre- EPU RTP will contain 120/105 = 8/7 of the inventory of fission products. Consequently, the RPV inventory and/or suppression pool heat capacity available at the time of the initiating event reach their respective limits for successful action in approximately 7/8 of the amount of time available for the baseline case, which amounts to a less than a 15% reduction in available response time. This reduction in available time applies to operator actions shortly after the initiating event to respond to either no injection into the RPV and/or no suppression pool cooling by manual initiation of these actions. Because the decay heat decreases to less than 2% of RTP within 20 minutes after shutdown, the increased decay heat at EPU becomes less significant regarding the time available for operator actions. The effect on the time available for operator actions in response to an ATWS from the EPU power level is strongly influenced by the intermediate power levels associated with the ATWS. However, for purposes of estimating HEPs, it is reasonable to assume that the intermediate power levels during an ATWS are also proportional to the initial steady state

power. This assumption is supported by MAPP calculations performed in support of the evaluation of the EPU.

The operator response evaluation for EPU evaluated the 61 post-initiating event actions used in the baseline models to identify the early event actions required to respond to either the lowering of RPV level or an increase in suppression pool temperature during shutdown or ATWS conditions. Fifteen early response actions and ATWS-related actions post-initiating event human errors were identified in the baseline (pre- EPU) PRAs for further evaluation of the relative importance of the time available for operator response. A sixteenth action, "failure to backup scram" (which would reduce the frequency of the ATWS sequences), was identified, but no credit is taken for it in the baseline models.

For the fifteen actions, the time available for completing the action was reduced by 1/8, and each action was evaluated to determine the influence of this reduction on the error rates estimated for the human actions in the baseline (pre- EPU) PRAs. An assessment of the relative importance of the time available for operator response is explicitly included in the models used to estimate HEPs in earlier releases of the Browns Ferry PRAs. Reference 2 used licensed plant operator ratings of PSFs to quantify human errors using a FLIM, in which the relative weight and difficulty associated with time constraints was rated by three operating crews for each post-initiating event action. During the update to the Browns Ferry Unit 2 and Unit 3 baseline PRAs, the HEPs for some actions were modified using the EPRI approach for the analysis of human actions, EPRI TR-100259. The EPRI approach uses the HCR correlation for actions where time-reliability related factors are considered most important and the CBDT method for actions where PSF related factors other than time are considered most important.

As a result of these evaluations, the HEPs for five of the fifteen actions were changed to reflect the reduced time available due to the EPU. Four of the actions are those in which time-reliability related factors are considered the most significant HEP contributor. These actions had been quantified using the HCR model in the baseline models. The HEPs for these actions were updated for EPU by incorporating the reduced available time directly into the HCR model. For eleven of the fifteen actions, time constraints were not a primary contributor to the evaluation of the HEP. In the baseline PRAs, these actions had been quantified using either the FLIM or CBDT methodology, both of which evaluate PSFs that may not be strongly influenced by the time available. For these actions, the effect of the reduction of 15% in available time was evaluated considering the reasoning for selecting values of the PSFs in the original evaluations. If the reduction in time available did not significantly change the assessment of the baseline PSFs of an action, its HEP was not modified. Using this approach, the HEPs of ten of the eleven actions were determined to be unaffected by the EPU, and one action was updated.

The HEPs that were changed are:

HOAD1 is the failure to inhibit the ADS with an un-isolated RPV. HOAD1 applies to sequences in which the RPV is not isolated and the injection from the FW system is available. During these conditions, the necessity to reduce level is dictated by the heat up of the suppression pool, because the suppression pool must absorb the energy that is not dissipated via the turbine steam

bypass valves. The time available before having to reduce the RPV level to -122 inches is dependent on the suppression pool heat up rate and 10 minutes is used for the baseline case. In addition, it was conservatively assumed that a high drywell pressure signal is also present. Given these conditions, the ADS timer provides four minutes after reaching -122 inches, and the total time available is then 14 minutes for the baseline case. This action is not time-critical (other PSFs such as preceding and concurrent actions influence the action) and is modeled using the CBDT methodology. For the EPU case, the suppression pool heat up rate increases, and the total time available decreases to 12.5 minutes for the required action. The action is still not time-critical, and the CBDT model remains applicable. However, using the EPRI methodology regarding minimum time needed to apply compensating factors for HEPs, the reduction of time is assumed to restrict the time available to review the operating crew actions, thus removing credit for one of two revisitation checks from the cognitive portion of the HEP. This resulted in an increase to the estimated mean HEP from the baseline value of 3.45E-03/demand to a EPU value of 4.89E-03/demand.

HOAD2, inhibit ADS actuation, during ATWS with an isolated RPV, is the failure to inhibit the ADS. HOAD2 applies to sequences where the RPV is either isolated or the FW system is unavailable as a source of water for the RPV. In addition, it was conservatively assumed that a high dry well pressure signal is also present. Under these conditions the level of the RVP rapidly decreases, and the time available is limited by the 115 second ADS timer. HOAD2 is a time-critical action, and the estimate of the HEP is based on the EPRI HCR correlation model. The ADS timeout is the same for both the baseline and EPU power levels. However, the mean HEP for this action increases from a baseline value of 4.64E-03/demand to a EPU value of 9.52E-03/demand in the HCR model affecting the rate at which the HEP changes when the time required to complete the action is compared to the median time obtained from operator simulator experience. For the EPU, the natural logarithm of the standard deviation of $T_{1/2}$, the median crew completion time for a time-related task, was raised from 0.4 to 0.45 to reflect the EPRI guidelines for the high stress anticipated during this event.

HOAL2, allow RPV level to drop and control at TAF, during ATWS with isolated RPV, reduces reactor power as the SLCS is injecting. The operator allows level to drop to the TAF, but once the TAF is reached action must be initiated to and gain control of injection within 2 minutes (120 seconds) to prevent the RPV level from decreasing to < -190 inches where core damage is assumed to begin. HOAL2 is considered a time-critical action with high stress, and the estimate of the HEP is based on the EPRI HCR correlation model. For the EPU estimate, the available time (T_w) in the HCR model is decreased from 120 to 105 seconds to reflect the reduced time available. In addition, for the EPU, the natural logarithm of the standard deviation of $T_{1/2}$, the median crew completion time for a time-related task was increased from 0.4 to 0.45 to reflect the EPRI guidelines for the high stress anticipated during this activity. As a result, the HEP for this action increased from a baseline value of 3.91E-02/demand to a EPU value of 1.29E-01/demand.

HOSL1, activate SLC with an un-isolated RPV, the system time-window for operator response is based on avoiding having to decrease the RPV level to the top of the core. This is a time-critical action with high stress, and the estimate of the HEP is based on the EPRI HCR correlation

model. The time available for the action depends on the point at which the suppression pool reaches the BIIT, estimated to be 3-5 minutes for the baseline case, and is taken as 240 seconds for the T_w in the HCR correlation. For the EPU estimate, the available time is decreased from 240 to 210 seconds to reflect the increased heat up rate. As a result, the HEP for this action increases from a baseline value of 6.71E-03/demand to a EPU value of 1.61E-02/demand.

HOSL2, activate SLC with an isolated RPV, the system time-window for operator response is based on avoiding having to decrease the RPV level to the top of the core. This is a time-critical action with high stress, and the estimate of the HEP is based on the EPRI HCR correlation model. The time available for the action depends on the point at which the suppression pool reaches BIIT, which occurs in less time for the case of an isolated core, because heat cannot be released via the turbine steam bypass valves. For the baseline case, the T_w in the HCR correlation was estimated at 3 minutes (180 seconds). For the EPU estimate, the available time is decreased from 180 to 153 seconds to reflect the increased heatup. As a result, the HEP for this action increases from a baseline value of 3.50E-02/demand to a EPU value of 7.71E-02/demand.

The HEPs developed by the operator response evaluation apply to both the Browns Ferry Unit 2 and Unit 3 PRAs. Table 10-5 presents a measure of the relative importance of the operator actions changed by the EPU for each of the PRAs. Table 10-5 shows the frequency-weighted fraction of the EPU CDF with sequences containing failures of any of the human actions in the PRA models. Table 10-5 is ordered by fractional importance for Unit 2 and extends down to the point where all five of the actions where the HEPs were increased in the models. It can be seen that (with the exception of two cross tie actions - these values differ due to the cross tie differences between units) the magnitude and order of the frequency weighted fractional importance of the operator responses for both units is very similar. It can also be seen from Table 10-5 that the human actions whose HEP increased appear in sequences that comprise a higher frequency-weighted fraction of the CDF than in the baseline. However, the HEP of an action does not have to increase for it to have a larger effect on CDF, as discussed below.

The largest fractional increase was observed in HORVD2, manual depressurization of the RPV using MSRVs, where the HEP did not increase as a result of the reduction in the time available. Failure of this action is now part of the sequences comprising 55% of the Unit 2 CDF and 43% of the Unit 3 CDF, up from 10% and 7% respectively. This is due to the elimination of enhanced CRD injection as a successful alternative for maintaining RPV level under certain conditions when other high-pressure injection systems have failed and the vessel remains at high pressure. Consequently, the frequency of core damage sequences where the operators are required to, but fail to depressurize the RPV has increased.

Three of the fifteen human actions with the highest fractional CDF importance have larger HEPs as a result of the reduction of time available for completing actions resulting from the EPU. All three of these actions, HOSL1, HOSL2, and HOAD1 appear in ATWS related scenarios. The largest fractional increase occurs for HOSL1, activate SLC with an un-isolated RPV, which increases from 1.2% to 2.2% CDF for Unit 2 and from 0.8% to 1.7% CDF for Unit 3. Thus, it is

concluded that there are no significant increases in CDF due to the reduced time available for operators to complete post initiating event actions.

To provide support for the estimates of the EPU influence on human action error evaluations, three scenarios were performed on the Browns Ferry simulator with the reactor initially operating at the EPU RTP level. Most of the actions with changed error rates involved ATWS scenarios. The ATWS scenarios were performed both with and without MSIV closure. Additionally, a reactor scram with the loss of high-pressure injection was performed to verify the operator actions using manual depressurization and level control using low-pressure injection. The simulator results indicate that the operators were capable of performing the required actions within the time frames in the human reliability calculations.

10.5.4 Success Criteria

The response to an initiator is represented in the PRA models by a set of discrete requirements for the operation of individual systems and the performance of specific operator actions. These scenario-specific requirements define the success criteria for system operation and operator actions to fulfill the critical safety functions necessary to maintain the reactor fuel in a safe condition. The critical safety functions are reactivity control, RPV pressure control, containment pressure control, and RPV inventory makeup. These individual criteria were reassessed at the EPU RTP conditions and increased decay heat.

The scram function is not affected by EPU because operation of the CRD system and the RPS is not affected by the EPU.

Because of the increased nominal initial power level, the time available to perform selected operator actions decreases. Examples include initiation of the SLCS in ATWS scenarios and control of the RPV level following a transient. These effects are summarized in Section 10.5.3.

The thermal hydraulic analyses supporting the success criteria used in the baseline (pre- EPU) PRAs were performed using MAAP. These analyses include consideration of scenarios using MAAP 3.0B to support the 1992 IPE as well as analyses using MAAP 4.0 to support the baseline PRAs representing operation at 105% of the OLTP. To investigate the potential effect of EPU, the entire set of thermal hydraulic analyses used to support the PRA success criteria were reanalyzed using MAAP 4.0.

The results of the reanalysis of supporting thermal hydraulic calculations indicate that enhanced CRD system operation (i.e., operation of both pumps for vessel injection) alone is not sufficient to prevent fuel damage if the RPV remains at high pressure. If the vessel is successfully depressurized within six hours following a successful scram, enhanced CRD system operation is sufficient to provide successful RPV level control. The scenario models in the PRAs were updated to reflect this change in success criteria. All other system success criteria were confirmed by the new analyses.

10.5.5 External Events

The effect of the EPU was reviewed to determine whether any new plant vulnerabilities exist from the occurrence of internal fires, seismic events, and other external events. Equipment changes associated with the EPU are minor and do not affect reliability. The EPU does not affect any existing structures, fire loading, or fire zones, and therefore no new vulnerabilities are introduced.

The Browns Ferry IPEEE (Reference 3) and Seismic IPEEE Report (Reference 4) were reviewed to determine whether there were any existing conditions where the EPU could introduce new vulnerabilities.

The IPEEE review concluded that there are no new fire-induced vulnerabilities associated with the EPU. The fire zones, fire loading, and safe shutdown paths for Browns Ferry do not change for EPU; therefore there is no increase in the vulnerability to internal fires.

Because the EPU modifications do not affect the structures or component anchoring, no new vulnerabilities are introduced as a result of a seismic event.

The IPEEE states that the Browns Ferry Plant/Facilities design is robust in relation to the 1975 SRP Criteria and a walk-down did not reveal any potential significant vulnerability that were not included in the original design basis analysis. Because there are no external or other structural changes associated with the EPU, there are no new vulnerabilities introduced from wind or flood events.

There are no changes in the EPU that could be affected by transportation or nearby facility accidents, thus there are no new vulnerabilities introduced from transportation and nearby facility accidents.

10.5.6 Shutdown Risk

A PRA model to evaluate shutdown risk, specifically CDF or LERF, has not been developed for Browns Ferry; however simplified risk evaluation tools are utilized. Browns Ferry utilizes a defense-in-depth approach to managing risk during plant shutdowns. To assist in the management of risk during shutdowns, TVA uses EPRI's computer code, ORAM. This process specifically monitors the safety functions: shutdown cooling; fuel pool cooling; inventory control; offsite AC power; onsite AC power; primary and secondary containment; and reactivity control.

EPU increases the amount of decay heat following shutdown, which has the greatest effect on RHR capability. Prior to each outage, a decay heat prediction based on best-estimate values (i.e. no statistical uncertainty or added conservatism applied) is determined. This decay heat prediction is used to create a "time to boil off curve" which is then used by the outage planning team to ensure that heat removal systems are available and that contingency plans are made for maintenance and testing of systems. The incremental decay heat due to the EPU will slightly extend the time that the existing DHR systems will need to remain in service during plant shutdown and remain available right after shutdown.

The Browns Ferry TS and TRM address the above requirements regarding shutdown risk management concepts. Browns Ferry procedures provide complete and consistent implementation of the steps required to ensure that shutdown risks attributes are controlled.

Therefore, EPU has no effect on the process controls for shutdown risk management and a negligible effect on the overall ability of Browns Ferry to adequately manage shutdown risk.

10.5.7 Probabilistic Risk Assessment

The PRAs are the end products of over 10 years of analysis effort. The Browns Ferry PRAs are living documents PRAs and were updated as recently as early 2003.

TVA procedures provide the details describing the use of the PRAs at Browns Ferry to support the Maintenance Rule. They assist in establishing performance criteria, balancing unavailability and reliability for risk significant SSCs and goal setting and provides input to the onsite Expert Panel for the risk significance determination process when revisions to the PRAs take place. Functions are potentially considered risk significant if any of the following conditions are satisfied:

- Functions modeled in the level 1 PRA are found to have a risk achievement worth greater than or equal to 2.0;
- Functions modeled in the level 1 PRA are found to have a risk reduction worth of less than or equal to 0.995; or
- Functions modeled in the level 1 PRA are found to have a cumulative contribution of 90% of the CDF.

Because the PRAs are actively used at Browns Ferry, a formal process is in place to evaluate and resolve PRA model-related issues as they are identified. The PRA Update Reports are evaluated for updating every other refueling outage. The administrative guidance for this activity is contained in TVA Procedures.

During November 1997, TVA participated in a PRA Peer Review Certification of the Browns Ferry PRA administered under the auspices of the BWROG Peer Certification Committee. The purpose of the peer review process is to establish a method of assessing the technical quality of the PRAs for their potential applications.

The Peer Review evaluation process utilized a tiered approach using standardized checklists allowing for a detailed review of the elements and the sub-elements of the Browns Ferry PRA to identify strengths and areas that needed improvement. The review system used allowed the Peer Review team to focus on technical issues and to issue their assessment results in the form of a "grade" of 1 through 4 on a PRA sub-element level. To reasonably span the spectrum of potential PRA applications, the four grades of certification as defined by the BWROG document "Report to the Industry on PSA Peer Review Certification Process - Pilot Plant Results" were employed.

The Browns Ferry Peer Review summarized in Table 10-6 resulted in a consistent evaluation across all the elements and sub-elements. Also, during the most recent PRA update, all significant findings (i.e., designated as Level A or B) from the Peer Certification were resolved, resulting in all PRA elements now having a minimum certification grade of 3.

10.6 OPERATOR TRAINING AND HUMAN FACTORS

Some additional training is required to enable plant operation at the EPU RTP level. For EPU conditions, operator responses to transient, accident and special events are not affected. Most abnormal events result in automatic plant shutdown (scram). Some abnormal events result in automatic RCPB pressure relief, ADS actuation and/or automatic ECCS actuation (for low water level events). EPU does not change any of the automatic safety functions. After the applicable automatic responses have initiated, the subsequent operator actions (e.g., maintaining safe shutdown, core cooling, and containment cooling) for plant safety do not change for EPU.

The analog and digital inputs for the ICS and SPDS will be reviewed to determine the effects from EPU. This includes required changes to monitored points, calculations, alert and trip setpoints. Various changes in EOP curves and limits, if required, will also require an update of the SPDS. Any changes required to the ICS and SPDS computer will be completed prior to startup at EPU conditions.

Following a review of the EPU modifications and identified key procedure changes, recommendations for operator training and simulator changes and a final determination of the operator training needs will be made, consistent with the Browns Ferry training program for selection of modifications for operator training. Any modifications required for EPU will be evaluated for its effect on the ICS and SPDS and any required changes (including any new monitoring points) will be addressed as a part of the modification. Any changes made will be discussed as a part of the operator-training program for EPU

Training required to operate the plant following EPU will be conducted prior to restart of the unit at the EPU conditions. Data obtained during startup testing will be incorporated into the training as needed. The classroom training will cover various aspects of EPU including changes to parameters, setpoints, scales, procedures, systems and startup test procedures. The classroom training will be combined with simulator training. The simulator training will include, as a minimum, a demonstration of transients that show the greatest change in plant response at EPU RTP compared to CLTP.

Installation of the EPU changes to the Browns Ferry Simulator is planned for approximately six months prior to EPU implementation. The first cycle of each training year includes training on the modifications to be installed during the upcoming spring outage, including simulator training as required. The two training cycles prior to EPU implementation will complete the recommended operator classroom and simulator training for EPU implementation. The simulator changes will include hardware changes for new or modified control room instrumentation and controls, software updates for modeling changes due to EPU setpoint changes and re-tuning of the core physics model for cycle specific data. The Simulator ICS will

also be updated for EPU modifications as part of the simulator outage prior to EPU implementation. Some differences may exist until EPU is implemented on both units. These differences will be included on the Simulator/Unit 2/Unit 3 differences listing which is reviewed in each training cycle.

Operating data will be collected during EPU implementation and start-up testing. This data will be compared to simulator data as required by ANSI/ANS 3.5-1985, Section 5.4.1. Simulator acceptance testing will be conducted to benchmark the simulator performance based on design and engineering analysis data as required in ANSI/ANS 3.5-1985. ANSI/ANS 3.5 is endorsed by Regulatory Guide 1.149, revision 3 and 10 CFR 55. The simulator acceptance testing for EPU is planned to be complete within 30 days after steady state operation at 120% of OLTP.

10.7 PLANT LIFE

10.7.1 RPV Internal Components

The plant life evaluation identifies degradation mechanisms influenced by increases in fluence and flow.

Browns Ferry has a procedurally controlled program for the inspection of selected RPV internal components in order to ensure their continued structural integrity. The inspection techniques utilized are primarily for the detection and characterization of service-induced, surface-connected planar discontinuities, such as IGSCC and IASCC, in welds and in the adjacent base material. Browns Ferry belongs to the BWRVIP organization and implementation of the procedurally controlled program is consistent with the BWRVIP issued documents. The inspection strategies recommended by the BWRVIP consider the effects of fluence on applicable components and are based on component configuration and field experience.

Components selected for inspection include those that are identified as susceptible to in-service degradation and augmented examination is conducted for verification of structural integrity. These components have been identified through the review of NRC IEBs, BWRVIP documents, and recommendations provided by GE SILs. The inspection program provides performance frequency for NDE and associated acceptance criteria. Components inspected include the following:

- CS piping
- CS spargers
- Core shroud and core shroud support (includes access hole covers)
- Jet pumps and associated components
- Top guide
- Lower plenum
- Vessel ID attachment welds
- Instrumentation penetrations
- Steam dryer drain channel welds
- FW spargers

- Core plate
- SLC piping (internal to RPV)

Continued implementation of the current procedure program assures the prompt identification of any degradation of reactor vessel internal components experienced during EPU operating conditions. Browns Ferry utilizes mitigation techniques, such as HWC and NMC, to mitigate the potential for IGSCC and IASCC. Reactor vessel water chemistry conditions are also maintained consistent with the EPRI guidance (Reference 5) and other established industry guidelines. EPRI periodically updates the water chemistry guidelines, as new information becomes available. As EPRI updates occur, they are reviewed for possible incorporation into the Browns Ferry Chemistry Program.

The peak fluence increase experienced by the reactor internals does not exceed the threshold value, which reflects a characteristic rise in intergranular cracking (Reference 6). The current inspection strategy for the reactor internal components is adequate to manage any potential effects of EPU.

10.7.2 Flow Accelerated Corrosion

The Browns Ferry procedurally controlled FAC program activities predict, detect, and monitor wall thinning in piping and components due to FAC. The FAC program is based on the EPRI guidelines in NSAC-202L, R2, "Recommendations for an Effective Flow-Accelerated Corrosion Program". The FAC program specifications and requirements ensure that the FAC program is implemented as required by NRC Generic Letter (GL) 89-08, "Erosion/Corrosion-Induced Pipe Wall Thinning". The FAC program uses selective component inspections to provide a measure of confidence in the condition of systems susceptible to FAC for each unit. These selective inspections are the basis for qualifying un-inspected components for further service. In addition to this aggressive monitoring program, selected piping replacements have been performed to maintain suitable design margins and FAC resistant replacement materials are used to mitigate occurrences of FAC.

A CHECWORKS™ FAC model (in accordance with the CHECWORKS™ FAC users guide and EPRI modeling guidelines) has been developed for Browns Ferry to predict the FAC wear rate (single and two-phase fluids) and the remaining service life for each piping component. The controlled CHECWORKS™ FAC model is updated after each refueling outage. The FAC models are also used to identify FAC examination locations for the outage examination list and uses empirical data input to the model.

Process variables that influence FAC at Browns Ferry:

- Moisture content
- Water chemistry
- Temperature
- Oxygen

- Flow path geometry and velocity
- Material composition

Browns Ferry has predicted EPU system operating conditions that are used as inputs to the CHECWORKS™ FAC model. EPU affects moisture content, temperature, oxygen and flow velocity but these remain within the CHECWORKS™ FAC model parameter bounds. Table 10-7 compares key parameter values affecting FAC. EPU parameter values result in changes consequential enough to heat balance models that certain systems or portion of systems (extraction steam) see a disproportional increase in wear compared to the percent power increase, i.e., FAC wear rate will increase in some systems and decrease in others.

The CHECWORKS™ FAC program targets FAC susceptible piping and components and includes the installation of FAC resistant material. Based on experience at pre EPU operating conditions and previous FAC modeling results, it is anticipated that the EPU operating conditions will result in changes for the CHECWORKS™ model. The changes may then result in additional inspection scope, unless carbon steel piping and components have been replaced with FAC resistant material.

The Browns Ferry FAC program will continue to adequately manage loss of material due to flow accelerated corrosion, such that the piping and components will continue to perform their intended functions at EPU conditions.

10.8 REFERENCES

1. GE Nuclear Energy, "Generic Guidelines for General Electric Boiling Water Reactor Extended Power Uprate," Licensing Topical Reports NEDC-32424P-A, Class III (Proprietary), February 1999; and NEDO-32424, Class I (Non-proprietary), April 1995.
2. Tennessee Valley Authority, "Browns Ferry Unit 2 Individual Plant Examination," September 1992.
3. Tennessee Valley Authority, "Browns Ferry Nuclear Plant, Individual Plant Examination for External Events (IPEEE)," July 1995.
4. Tennessee Valley Authority, "Seismic IPEEE Report, Browns Ferry Nuclear Plant," Revision 0, June 1996.
5. EPRI Report, "BWR Water Chemistry Guidelines – 2000 Revision," TR-103515, Revision 2, February, 2000.
6. Engineering Materials Stress Corrosion Handbook, Peter L. Anderson, 1992, Chapter 6, "Irradiation-Assisted Stress Corrosion Cracking."

Table 10-1

Browns Ferry High Energy Line Breaks

Break Location	Increase (Change) Due to EPU		
	Mass Release	Pressure	Temperature
MSLB in Steam Tunnel or MSVV	No change	No change	No change
FW Line Breaks in Steam Tunnel or MSVV	+ 12.3%	No change	≤ 0.5°F
RCIC Steam Line Breaks in Reactor Building or MSVV	No change	No change	No change
HPCI Steam Line Breaks in Reactor Building	No change	No change	No change
RWCU Breaks in Reactor Building	+ 4.4%	≤ 0.07 psi	≤ 9.3°F

Table 10-2

Browns Ferry Equipment Qualification for EPU

Parameter	EPU Effect
Normal EPU plant operation radiation increase inside containment for EQ	14.3%
Accident EPU radiation increase inside containment for EQ	≤ 12%
Accident EPU peak temperature inside containment for EQ	No change
Accident EPU peak pressure inside containment for EQ	No change
Accident EPU temperature outside containment for EQ	No change
Accident EPU pressure outside containment for EQ	No change
Normal EPU radiation level increase outside containment for EQ	≤ 14.3%
Accident EPU radiation outside containment for EQ	≤ 12%

Table 10-3

Summary Comparison of Baseline and Updated CDF and LERF

	Baseline	EPU
Browns Ferry Unit 2		
Total CDF (yr^{-1}, mean value)	1.255 E-6	2.624 E-6
LERF (yr^{-1}, mean value)	2.455 E-7	3.927 E-7
Browns Ferry Unit 3		
Total CDF (yr^{-1}, mean value)	1.907 E-6	3.361 E-6
LERF (yr^{-1}, mean value)	2.688 E-7	4.532 E-7

Table 10-4
Summary of the Initiator Contributions to CDF and LERF for Browns Ferry

Unit 2: Initiator category contribution to CDF and LERF					
Initiator Category	Mean frequency (events per year)	Baseline		EPU	
		CDF	LERF	CDF	LERF
Transient initiator categories					
Inadvertent opening of one MSRV	4.36E-02	4.52E-08	1.92E-08	4.43E-08	1.99E-08
Inadvertent opening of two or more MSRVs	3.42E-04	2.72E-09	6.18E-11	2.62E-09	6.64E-11
Inadvertent SCRAM	2.57E-01	2.66E-08	4.41E-10	8.99E-08	3.93E-09
Loss of 500 kV to plant	9.32E-03	4.35E-09	1.01E-09	3.91E-08	3.06E-09
Loss of 500 kV to one unit	3.42E-02	1.82E-08	5.32E-09	1.51E-07	1.38E-08
Loss of I&C Bus A	4.10E-03	6.25E-09	5.51E-10	2.11E-08	1.87E-09
Loss of I&C Bus B	4.10E-03	6.26E-09	5.56E-10	2.11E-08	1.87E-09
Loss of all condensate	1.24E-02	9.84E-09	1.82E-09	5.58E-08	4.68E-09
Loss of condenser heat sink (MSIV closure, turbine trip without bypass, loss of condenser vacuum)	1.20E-01	8.81E-08	2.92E-08	5.72E-07	7.16E-08
Loss of FW	4.81E-02	1.10E-08	7.76E-09	5.11E-08	1.05E-08
Loss of plant air	1.20E-02	5.17E-09	2.08E-09	5.17E-08	5.73E-09
Total loss of offsite power	7.15E-03	5.05E-07	1.20E-08	4.82E-07	1.15E-08
Loss of RBCCW	1.10E-02	1.87E-08	2.05E-09	6.01E-08	5.97E-09
Loss of raw cooling water	7.95E-03	8.84E-08	1.35E-08	6.77E-08	9.84E-09
Momentary loss of offsite power	7.56E-03	4.31E-10	8.45E-11	2.05E-09	3.12E-10
Turbine trip with bypass	1.43E+00	2.54E-07	8.22E-08	6.75E-07	1.53E-07
LOCA initiator categories					
Break outside containment	6.67E-04	3.79E-09	1.42E-10	3.71E-08	2.32E-09
Excessive LOCA	9.39E-09	9.39E-09	9.39E-09	9.39E-09	9.39E-09
Interfacing system LOCA	4.64E-08	4.64E-08	4.64E-08	4.64E-08	4.64E-08
Core Spray line A break	1.57E-06	2.32E-09	8.47E-11	2.32E-09	8.47E-11

Table 10-4

Summary of the Initiator Contributions to CDF and LERF (continued)

Unit 2: Initiator category contribution to CDF and LERF					
Initiator Category	Mean frequency (events per year)	Baseline		EPU	
		CDF	LERF	CDF	LERF
LOCA initiator categories					
Core Spray line B break	1.57E-06	4.05E-09	1.55E-10	4.05E-09	1.55E-10
Recirculation discharge line A break	1.10E-05	6.53E-09	1.59E-10	6.53E-09	1.59E-10
Recirculation discharge line B break	1.10E-05	5.24E-09	4.66E-11	5.24E-09	4.66E-11
Recirculation suction line A break	7.85E-07	3.55E-10	0.00E+00	3.55E-10	0.00E+00
Recirculation suction line B break	7.85E-07	3.55E-10	0.00E+00	3.55E-10	0.00E+00
Other large LOCA	1.57E-06	7.88E-10	3.14E-12	7.88E-10	3.14E-12
Medium LOCA	4.00E-05	2.21E-08	4.36E-09	2.21E-08	5.30E-09
Small LOCA	5.00E-04	1.16E-09	9.54E-10	1.15E-09	9.44E-10
Very small LOCA (Recirculation pump seal failure)	3.38E-03	2.71E-10	7.11E-11	1.05E-09	1.77E-10
Internal flooding initiator categories					
EBCW flood in Reactor Building – shutdown unit	1.20E-05	8.99E-09	1.94E-10	3.45E-09	5.43E-10
EBCW flood in Reactor Building – operating unit	1.70E-06	3.11E-10	4.48E-11	1.11E-10	0.00E+00
Flood from the condensate storage tank	9.80E-05	2.32E-09	7.07E-11	2.29E-09	7.03E-11
Flood from the torus	1.34E-05	4.55E-09	1.27E-10	4.02E-09	1.23E-09
Large turbine building flood	2.20E-03	2.06E-08	3.43E-09	1.62E-08	2.97E-09
Small turbine building flood	1.44E-02	2.52E-08	2.08E-09	7.53E-08	5.64E-09

Table 10-4

Browns Ferry Summary of the Initiator Contributions to CDF and LERF (continued)

Unit 3 Initiator category contribution to CDF and LERF					
Initiator Category	Mean frequency (events per year)	Baseline		EPU	
		CDF	LERF	CDF	LERF
Transient initiator categories					
Inadvertent opening of one MSRV	4.36E-02	5.58E-08	1.930E-08	5.53E-08	2.04E-08
Inadvertent opening of two or more MSRVs	3.42E-04	2.94E-09	7.47E-11	2.94E-09	7.92E-11
Inadvertent SCRAM	2.57E-01	2.89E-08	4.47E-10	9.42E-08	4.35E-09
Loss of 500 kV to plant	9.32E-03	1.18E-08	2.30E-09	4.46E-08	4.33E-09
Loss of 500 kV to one unit	3.42E-02	4.15E-08	5.13E-09	1.69E-07	1.41E-08
Loss of I&C Bus A	4.10E-03	6.33E-09	4.64E-10	2.12E-08	1.75E-09
Loss of I&C Bus B	4.10E-03	6.33E-09	4.64E-10	2.12E-08	1.75E-09
Loss of all condensate	1.24E-02	1.44E-08	1.90E-09	8.13E-08	1.30E-08
Loss of condenser heat sink (MSIV closure, turbine trip without bypass, loss of condenser vacuum)	1.20E-01	8.74E-08	2.96E-08	5.67E-07	7.29E-08
Loss of FW	4.81E-02	1.13E-08	7.93E-09	5.15E-08	1.10E-08
Loss of plant air	1.20E-02	4.09E-09	1.86E-09	5.15E-08	5.31E-09
Total loss of offsite power	7.15E-03	1.07E-06	3.21E-08	1.05E-06	3.18E-08
Loss of RBCCW	1.10E-02	1.89E-08	1.78E-09	6.02E-08	5.66E-09
Loss of raw cooling water	7.95E-03	7.74E-08	1.26E-08	8.03E-08	1.46E-08
Momentary loss of offsite power	7.56E-03	4.97E-10	8.44E-11	2.13E-09	3.17E-10
Turbine trip with bypass	1.43E+00	2.70E-07	8.37E-08	7.05E-07	1.58E-07
LOCA initiator categories					
Break outside containment	6.67E-04	4.05E-09	1.45E-10	3.73E-08	2.40E-09
Excessive LOCA	9.39E-09	9.39E-09	9.39E-09	9.39E-09	9.39E-09
Interfacing system LOCA	4.64E-08	4.64E-08	4.64E-08	4.64E-08	4.64E-08
Core Spray line A break	1.57E-06	2.44E-09	4.72E-11	2.44E-09	4.72E-11
Core Spray line B break	1.57E-06	3.55E-09	1.04E-10	3.55E-09	1.04E-10
Recirculation discharge line A break	1.10E-05	6.38E-09	4.25E-11	6.38E-09	4.25E-11

Table 10-4

Summary of the Initiator Contributions to CDF and LERF (continued)

Unit 3: Initiator category contribution to core damage frequency and LERF					
Initiator Category	Mean frequency (events per year)	Baseline		EPU	
LOCA initiator categories					
Recirculation discharge line B break	1.10E-05	6.42E-09	4.34E-11	6.42E-09	4.34E-11
Recirculation suction line A break	7.85E-07	3.68E-10	0.00E+00	3.68E-10	0.00E+00
Recirculation suction line B break	7.85E-07	3.68E-10	0.00E+00	3.68E-10	0.00E+00
Other large LOCA	1.57E-06	7.97E-10	0.00E+00	7.97E-10	0.00E+00
Medium LOCA	4.00E-05	2.23E-08	5.22E-09	2.23E-08	5.22E-09
Small LOCA	5.00E-04	1.28E-09	9.39E-10	1.26E-09	9.29E-10
Very small LOCA (Recirculation pump seal failure)	3.38E-03	3.09E-10	7.12E-11	1.10E-09	1.79E-10
Internal flooding initiator categories					
ESCW flood in Reactor Building – shutdown unit	1.20E-02	8.98E-10	1.95E-10	3.59E-09	5.65E-10
ESCW flood in Reactor Building – operating unit	1.70E-06	2.82E-09	8.31E-11	2.59E-09	3.22E-10
Flood from the condensate storage tank	9.80E-05	2.36E-09	9.37E-11	2.34E-09	9.31E-11
Flood from the torus	1.34E-05	2.85E-08	8.74E-10	2.72E-08	8.79E-09
Large turbine building flood	2.20E-03	1.77E-08	3.16E-09	1.95E-08	4.10E-09
Small turbine building flood	1.44E-02	4.31E-08	2.16E-09	1.07E-07	1.54E-08

Table 10-5

Frequency Weighted Fractional Importance to Core Damage of Operator Actions Used in Browns Ferry PRA

Database Variable	Operator Action Description	HEP Increase?	Frequency-Weighted Fractional Importance to Core Damage		Fraction Increase	Frequency-Weighted Fractional Importance to Core Damage		Fraction Increase
			U2 Base	U2 EPU		U3 Base	U3 EPU	
HORVD2	Manual Depressurization of RPV Using MSRVs		1.0E-01	5.5E-01	4.5E-01	6.8E-02	4.3E-01	3.6E-01
HOLP2	Operator Fails to Initiate Wet Well Vent Given Failure to Initiate Suppression Pool Cooling		1.9E-01	8.5E-02	-1.0E-01	1.7E-01	9.1E-02	-7.4E-02
HOSP1	Align RHR for Suppression Pool Cooling		1.2E-01	5.0E-02	-6.7E-02	9.6E-02	4.6E-02	-5.0E-02
U12	Align Alternate Injection to RPV via the Unit 1/Unit 2 Cross-tie		1.0E-01	4.7E-02	-5.7E-02	0.0E+00	0.0E+00	N/A
HOU12	Maintain RPV Level W/Alternate Source, SF RING HDR Flood		2.3E-02	3.7E-02	1.3E-02	1.8E-02	0.0E+00	-1.8E-02
HOSL1	Initiate SLCS Given ATWS with Unisolated RPV	YES	1.2E-02	2.2E-02	9.4E-03	8.1E-03	1.7E-02	9.1E-03
HORP2	Start RHR/CS Pumps for LPCI, L1 Signal Not Anticipated		4.1E-03	1.3E-02	9.0E-03	3.0E-03	1.1E-02	7.8E-03
HOSL2	Initiate SLCS, Given an ATWS with RPV Isolated	YES	6.4E-03	1.2E-02	5.9E-03	4.2E-03	9.7E-03	5.6E-03
HOSV1	Defeat MSIV Closure Logic, ATWS with Turbine Trip		2.4E-02	1.1E-02	-1.3E-02	1.6E-02	8.9E-03	-7.1E-03
HOBD1	Depressurize with the Turbine Bypass Valves after Loss of HPCI and RCIC		6.8E-04	8.4E-03	7.7E-03	4.5E-04	6.6E-03	6.2E-03
HOAD1	Inhibit ADS During an ATWS	YES	3.4E-03	5.8E-03	2.4E-03	2.3E-03	4.6E-03	2.3E-03
HOLA1	Manual Control of Low Pressure Injection During ATWS		9.5E-03	4.7E-03	-4.8E-03	6.2E-03	3.7E-03	-2.5E-03
HOSW1	Transfer Mode Switch to Refuel/Shutdown		3.0E-03	2.3E-03	-7.3E-04	2.4E-03	2.0E-03	-3.5E-04
HOSP2	Align RHR for Suppression Pool Cooling, ATWS		3.9E-03	1.9E-03	-2.1E-03	2.5E-03	1.5E-03	-1.1E-03
HOLP1	Control RPV Level at Low Pressure Using RHR for Core Spray		7.0E-03	1.6E-03	-5.4E-03	7.8E-03	2.1E-03	-5.7E-03
HOAL2	Lower and Control Vessel Level	YES	6.9E-04	1.5E-03	8.6E-04	4.3E-04	1.2E-03	7.6E-04

Table 10-5

Frequency Weighted Fractional Importance to Core Damage of Operator Actions Used in Browns Ferry PRAs (continued)

Database Variable	Operator Action Description	HEP Increase?	Frequency-Weighted Fractional Importance to Core Damage		Fraction Increase	Frequency-Weighted Fractional Importance to Core Damage		Fraction Increase
			U2 Base	U2 EPU		U3 Base	U3 EPU	
HOU11	Cross-tie Unit 1 Pumps and HX to Unit 2 Torus		3.1E-03	1.4E-03	-1.7E-03	1.1E-01	0.0E+00	-1.1E-01
HOAD2	Inhibit ADS, ATWS, Isolated Vessel	YES	2.3E-04	9.0E-04	6.6E-04	1.5E-04	7.1E-04	5.5E-04
HOBB1	Align and Start RHRSW Swing Pump After a LOSP with Degraded BECW		7.0E-04	3.3E-04	-3.7E-04	5.3E-04	3.0E-04	-2.3E-04
HOALI	Level Control During ATWS		1.2E-04	6.2E-05	-5.5E-05	7.7E-05	4.9E-05	-2.8E-05
HORP1	Start RHR & CS Pumps for LPCI, L1 Signal Not Anticipated		0.0E+00	0.0E+00	0.0E+00	5.5E-05	2.7E-05	-2.7E-05

Table 10-6

Results of Browns Ferry PRA Peer Review

PRA ELEMENT	CERTIFICATION GRADE
INITIATING EVENTS	3
ACCIDENT SEQUENCE EVALUATION	3
THERMAL HYDRAULIC ANALYSIS	2
SYSTEMS ANALYSIS	3
DATA ANALYSIS	2
HUMAN RELIABILITY ANALYSIS	3
DEPENDENCY ANALYSIS	3
STRUCTURAL RESPONSE	3
QUANTIFICATION	3
CONTAINMENT PERFORMANCE ANALYSIS	2
MAINTENANCE AND UPDATE PROCESS	3

Table 10-7

Browns Ferry FAC Parameter Comparison for EPU

Parameter	CHECKWORKS™ Allowable Input	105% OLTP Typical Range of Values	EPU Typical Range of Values
Steam Flow (lbm/hr)	1 - 100,000,000	767,000 to 11,800,000	930,000 to 13,840,000
Velocity (ft/sec)	Calculated in program	122 to 169	132 to 171
Steam Quality (%)	0 to 100	92.6 to 97.9	92.8 to 98.2
Operating temperature (°F)	0 to 750	312 to 388	314 to 403

11. LICENSING EVALUATIONS

11.1 OTHER APPLICABLE REQUIREMENTS

The analysis, design, and implementation of EPU were reviewed for compliance with the current plant licensing basis acceptance criteria and for compliance with new regulatory requirements and operating experience in the nuclear industry. [[

]] The associated tables identify the issues that are generically evaluated, and issues to be evaluated on a plant-unique basis. The applicable plant-unique evaluations have been performed for the subjects addressed below.

11.1.1 NRC and Industry Communications

All of the issues from the following NRC and industry communications are either generically evaluated in ELTR2 (as supplemented), or are evaluated on a plant-specific basis as part of the EPU program. These evaluations conclude that every issue is either (1) not affected by the EPU, (2) already incorporated into the generic EPU program, or (3) bounded by the plant-specific EPU evaluations. The NRC and industry communications evaluated cover the subjects listed below.

- CFRs
- NRC TMI Action Items
- NRC Action Items (Formerly Unresolved Safety Issues) and New Generic Issues
- NRC Regulatory Guides
- NRC Generic Letters
- NRC Bulletins
- NRC Information Notices
- NRC Circulars
- INPO Significant Operating Event Reports (applicable to the EPU)
- GE Services Information Letters
- GE Rapid Information Communication Service Information Letters

11.1.2 Plant-Unique Items

Plant-unique items whose previous evaluations could be affected by operation at the EPU RTP level have been identified. These are (1) the NRC and Industry communications discussed above, (2) the safety evaluations for work in progress and not yet integrated into the plant design, (3) the temporary modifications that could have been reviewed prior to the EPU and still exist

after EPU implementation, and (4) the plant EOPs. These items will be reviewed for possible effect by the EPU, and items affected by the EPU will be revised prior to EPU implementation.

11.1.2.1 Commitments to the NRC

Prior to EPU implementation, the potentially power dependent NRC commitments are reviewed for required changes due to EPU conditions prior to EPU implementation. The commitments that are affected by EPU will be updated to account for the effects of EPU.

11.1.2.2 10 CFR 50.59 Evaluations

10 CFR 50.59 evaluations performed for work in progress and 10 CFR 50.59 evaluations completed but not yet included in the UFSAR are reviewed prior to EPU implementation for required changes due to EPU conditions. No 10 CFR 50.59 evaluation process change is required for EPU.

11.1.2.3 Temporary Modifications

Pre-existing Temporary Modifications, Technical Operability Evaluations, Open Work Orders that will be in effect after EPU implementation will be reviewed and revised, if necessary, to include EPU conditions.

11.1.2.4 Emergency and Abnormal Operating Procedures

EOPs and AOPs can be affected by EPU. Some of the EOPs variables and limit curves depend upon the value of rated reactor power. Some AOPs may be affected by plant modifications to support the higher power level.

EOPs include variables and limit curves, defining conditions where operator actions are indicated. Some of these variables and limit curves depend upon the RTP value. Changing some of the variables and limit curves requires modifying the values in the EOPs and updating the support documentation. EOP curves and limits may also be included in the safety parameter display system and will be updated accordingly.

The charts and tables used by the operators to perform the EOPs are reviewed for any required changes prior to each core reload. The EOPs were reviewed for any changes required to implement EPU. The operators will receive training on these procedures as described in Section 10.6.

AOPs include event based operator actions. Some of these operator actions may be influenced by plant modifications required to support the increase in rated reactor power. Changing some of the operator actions may require modifications to the AOPs and updating the support documentation. The plant AOPs were reviewed for any effects of power uprate and no changes to the event-based actions are required. Some of the setpoints used in the AOPs change due to EPU. The operators will receive training on these procedures as described in Section 10.6.

The plant EOPs are reviewed for any effects of the EPU, and the EOPs will be updated, as necessary. This review is based on Section 2.3 of ELTR2, which includes a list of operator action levels, which are sensitive to the EPU.

11.2 REFERENCES

1. GE Nuclear Energy, "Generic Evaluations of General Electric Boiling Water Reactor Extended Power Uprate," (ELTR2), Licensing Topical Reports NEDC-32523P-A, Class III (Proprietary), February 2000; NEDC-32523P-A, Supplement 1 Volume I, February 1999; and Supplement 1 Volume II, April 1999.

ENCLOSURE 6

TENNESSEE VALLEY AUTHORITY
BROWNS FERRY NUCLEAR PLANT (BFN)
UNITS 2 AND 3

PROPOSED TECHNICAL SPECIFICATIONS (TS) CHANGE TS - 418 - REQUEST FOR LICENSE AMENDMENT FOR EXTENDED POWER UPRATE OPERATION

BFN EXTENDED POWER UPRATE UFSAR REVIEW MATRIX

This enclosure provides a matrix identifying sections in the UFSAR that are currently under evaluation for change for EPU implementation. TVA will complete the final UFSAR changes following approval of this change.

See Attached:

Browns Ferry Extended Power Uprate UFSAR Review Matrix

Chapter	Affected Section 1	2	3	4	5	6	7	8	9	10	11	12	13	14	15	16	17	18	19	21	21	22	23
1	X	X	N	N	N	X	N	N	N	N	N	X											
2	N	N	N	X	N	N																	
3	N	N	X	N	N	N	X	X															
4	N	X	X	X	X	X	X	X	N	N	N	N											
5	N	X	X																				
6	N	N	N	N	X	N																	
7	N	N	N	N	X	N	N	N	X	N	N	N	N	N	N	N	N	N	N				
8	N	X	N	N	N	N	N	N	N	N													
9	N	N	N	N	N																		
10	N	N	N	N	X	X	N	N	X	N	N	N	N	N	N	N	N	N	N	N	N	N	N
11	X	X	N	N	N	N	X	N	X														
12	N	X	N																				
13	N	N	N	N	N	N	N	N	N	N	X[1]												
14	X	N	N	X	X	X	N	N	N	X	X												

Appendix	All Sections	Comments
A	N	Historical
B	X	Technical Specifications
C	X	
D	N	
E	N	
F	N	
G	N	Historical
H	N	Deleted
I	N	Historical
J	N	Historical
K	N	Historical
L	N	Historical
M	N	
N	X	Units 2 and 3 Reload Analysis

Notes

1 New Section - EPU Startup Tests
N = No Change Anticipated
X = Anticipated Change(s) Under Evaluation