OFFICE OF THE SECRETARY
CORRESPONDENCE CONTROL TICKET

Date Printed: Jul 19, 2004 12:00

PAPER NUMBER:	LTR-04-0458	**LOGGING DATE:**	07/19/2004
ACTION OFFICE:	EDO		To: Paperiello, NMSS
			cys: EDO DEDMRS DEDH DEDM AO DEDR NRR
AUTHOR:	Phd Maurice Adams, Jr.		
AFFILIATION:	OH		
ADDRESSEE:	SEN George Voinovich		
SUBJECT:	Concerns proposal to NRC, "Model-Based Condition Monitoring for Critical Pumps in PWR and BWR Nuclear Power Plants"		
ACTION:	Appropriate		
DISTRIBUTION:	Chrm, Cmrs, OCA		
LETTER DATE:	07/07/2004		
ACKNOWLEDGED	No		
SPECIAL HANDLING:	Immediate release via SECY/EDO/DPC		
NOTES:	OCM #5471		
FILE LOCATION:	ADAMs		
DATE DUE:		**DATE SIGNED:**	

5471

CASE

SCHOOL OF ENGINEERING

CHAIRMAN REC'D

04 JUL 12 PM 3: 31

Mechanical and Aerospace Engineering

Case Western Reserve University
10900 Euclid Avenue
Cleveland, Ohio 44106-7222

Phone 216-368-2940
Fax 216-368-6445
www.case.edu

Mr. George V. Voinovich, U.S. Senator
317 Hart Senate Office Building
Washington, DC 20510

July 7, 2004

RE: Enclosed research proposal submitted to the U.S. Nuclear Regulatory Commission (NRC) January 2004.

Dear Senator Voinovich:

Since you are chairman of the *Clean Air Subcommittee*, which is responsible for NRC oversight, I have enclosed for you and your staff two copies of our proposal to the NRC which is entitled "Model-Based Condition Monitoring for Critical Pumps in PWR and BWR Nuclear Power Plants". My reason for calling this proposal to your attention now is unfortunately because we have so far not received any evaluation feedback from the NRC on this important proposal. It has been over six months since its submission to NRC and I have personally tried several times, without success, to make contact with the NRC to obtain an official response with evaluation. I respectfully solicit your help in this matter. This is an unusual and unorthodox course of action for me.

The proposal's cover page short Summary describes the important technology mission being proposed by the Case School of Engineering at Case Western Reserve University. We have assembled an internationally recognized team of four principal investigators along with active participation of the primary U.S. power plant pump company (Flowserve Corporation) and their top pump experts (see Proposal Section 10: "Vitae of Principal Investigators and Flowserve Consultants"). As our proposal details and justifies, it is our research team's firm conviction that the 4-year scope of work described in our proposal to the NRC would lead to a significant increase in safety margins and confidence levels in operating nuclear power plants. It is well known in the nuclear power industry that under emergency conditions, the operability of safety related pumps is what prevents the sort of worst case disaster scenarios that are the major concern and business of the NRC.

At this point in time, I am at a loss for a reasonable explanation for NRC's non-response to our proposal. It is therefore somewhat an act of desperation that as the lead principal investigator of our research team, I request you and your staff to intercede with the NRC on our behalf in this matter.

Sincerely,

M. L. Adams

Maurice L. Adams, Jr.
Professor, Mechanical & Aerospace Engineering
The Case School of Engineering
Case Western Reserve University

Copies: Dr. Nils Diaz, Chairman, NRC
Senator Mike DeWine
Dr. Robert F. Savinell, Case Dean of Engineering

5471

Model-Based Condition Monitoring For Critical Pumps in PWR and BWR Nuclear Power Plants

Unsolicited Proposal Submitted November 2003 To The

Office of Nuclear Regulatory Research
U.S. Nuclear Regulatory Commission
Washington, DC 20555

Submitted By

The Case School of Engineering
Case Western Reserve University
Cleveland, OH 44106

SUMMARY

Researchers at Case Western Reserve University (CWRU) have recently developed and successfully demonstrated model-based observers for early detection of wear, aging and progressing faults in power plant rotating machinery. Tests in CWRU's Rotating Machinery Laboratory have validated model-based observer software to identify, track, and provide early detection of developing specific machinery faults and internal conditions.

The 4-year mission here proposed is to extend this success to model-based condition monitoring for pumps that are critical to nuclear power plant safe operation and megawatt generation balance of plant (BOP). These pumps include *reactor coolant and reactor re-circulation pumps* (RCP, RRP), (2) *steam generator main feed water pumps* (FWP), (3) *auxiliary feed water pumps* (AUXFP), (4) *high pressure safety injection pumps* (HPI), (5) *primary loop charging pumps* (CP), and (6) *residual heat removal (RHR) pumps.* Targeting the approximately 100 continuing-to-age U.S nuclear power plants now in service, this proposed research is intended to significantly improve monitoring and associated test procedures for the critical safety related pumps in PWR and BWR plants. This proposal contains a comprehensive technology transfer and commercialization plan.

4-Year Budget Requested
$ 3,824,500

Dr. Maurice L. Adams, Jr./PI, mla5@cwru.edu
Professor, Mechanical & Aerospace Engineering
Tel (216) 368-6449/Fax (216) 368-6445

Dr. Kenneth A. Loparo, Co-PI
Professor, Systems Engineering
Tel (216) 368-4115

Dr. Jaikrishnan Kadambi, Co-PI
Professor, Mechanical & Aerospace Engineering

Dr. David Zeng, Co-PI
Assoc. Prof., Civil Engineering

Robin Trail 11/06/03
Robin Trail CWRU Research Administration, Tel (216) 368-4510

Contents

1. Background

This proposal addresses the development of condition monitoring and prognostics systems for safety related centrifugal pumps in nuclear power plants. ***This is a collaboration between Case Western Reserve University and Flowserve Corporation*** (see Agreement, Appendix-C). ***It is intended that Flowserve will be the main organization commercializing the technology developments from this work.*** Because the majority of safety pumps are of the centrifugal type, these pumps are the focus of this research initiative. Additional information is contained here in Appendix-B which provides a description of the various safety related centrifugal pumps. Appendix-B also provides (1) detailed descriptions and influences of pump stressors, (2) failure modes and failure causes, and (3) failure cause analysis. The important technology areas for future PWR and BWR pump development projects are outlined in Figure 1. The specific technology topic of ***Condition Monitoring and Prognostics*** is the key to realizing the optimum utilization of all other important technology areas listed in Figure 1. The major safety related pump types are illustrated in Figure 2 with typical configurations now in service. These illustrations are not all drawn to the same scale. A summary list of ***pump segments*** and specific ***components*** are given in Table 1.

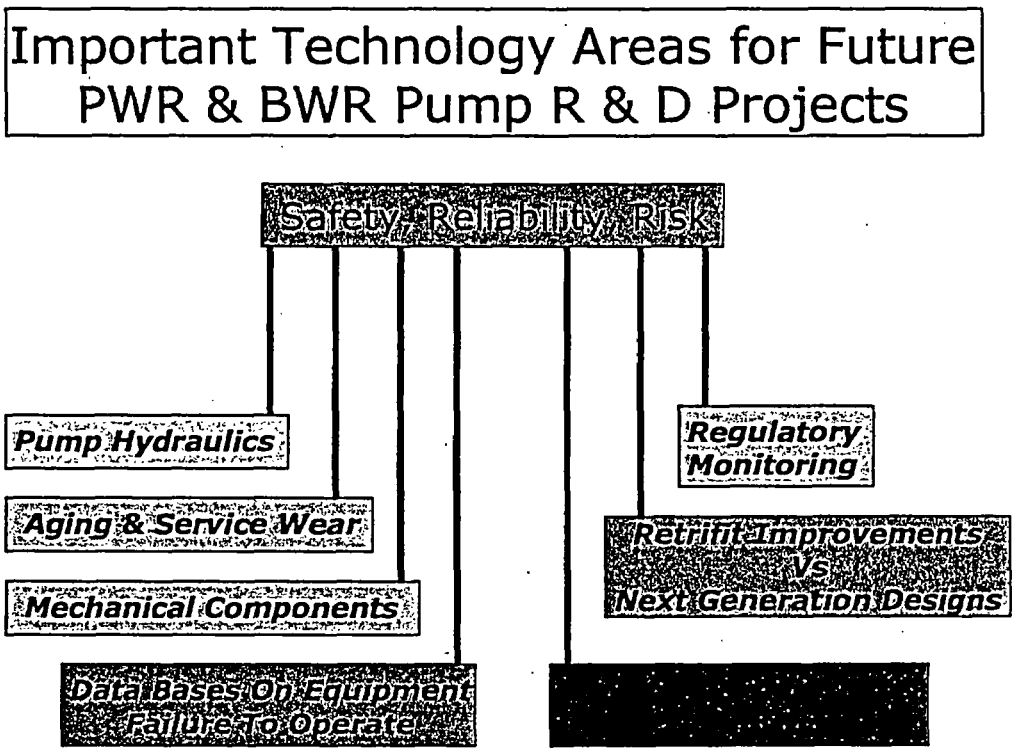

Figure 1. Important technology areas for PWR/BWR pump R & D

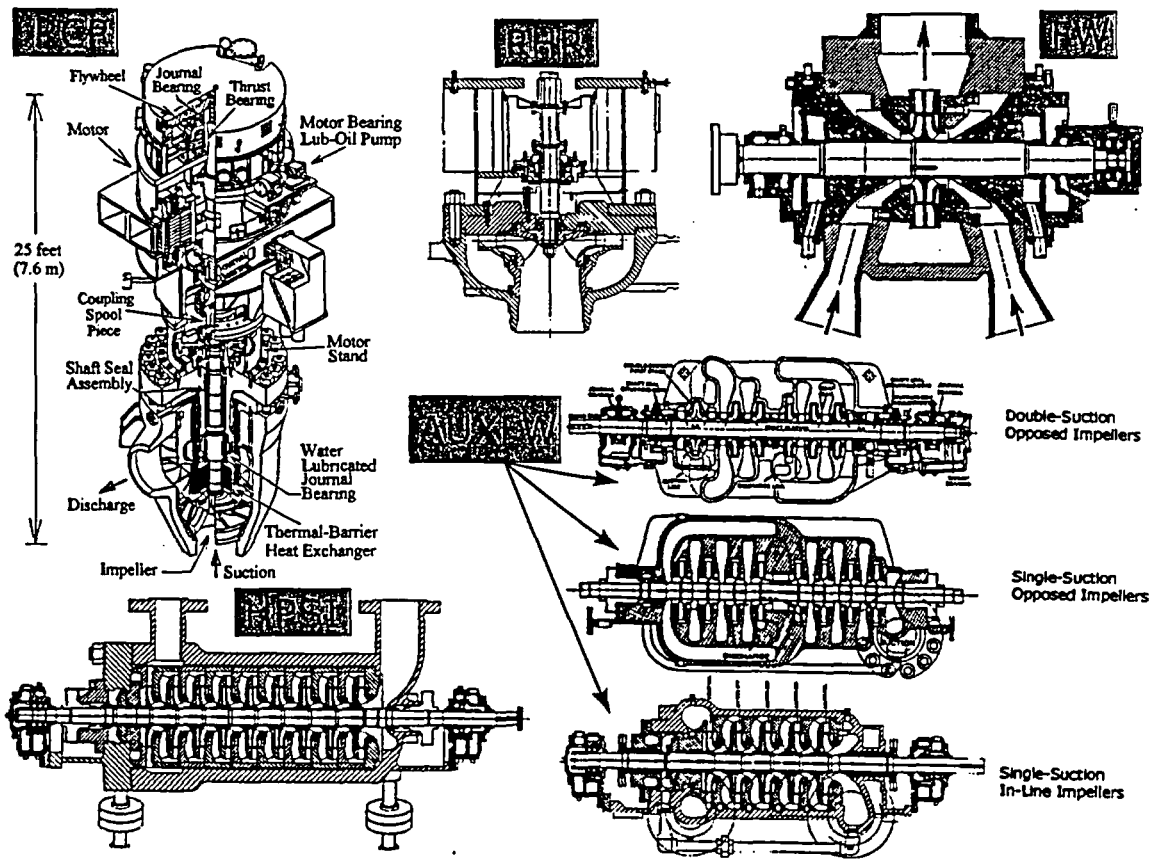

Figure 2. The primary safety related pump services

Pump Segment	Parts
Rotating elements	shaft, impellers, miscellaneous spacers thrust runners, fasteners
Non-rotating internals	diffusers or volutes, return channels, wear surfaces, fasteners
Pressure-containment casing	upper casing, lower casing, fasteners, suction and discharge nozzles
Mechanical subsystems	thrust bearing, radial bearings, shaft seals, wear rings thrust balancer, coupling, fasteners,
Support	base frame, fasteners

Table 1. Pump segment and component summary list

For the development of model-based condition monitoring and prognostics systems for safety related pumps, it is essential that the ***fundamental technology***, ***design*** and ***operating principles*** are properly represented in the real-time models. These are discussed in the next section.

2. Overview of Centrifugal Pump Operability Challenges

Figure 3 illustrates a number of design options for centrifugal pumps based on several decades of testing, design iterations and many years of experience and refinement. The ***Specific Speed,*** N_s, is the parameter that determines the impeller stage optimum-efficiency layout geometry and inherent operating characteristics of a pump, as illustrated in Figure 3. Also shown is the peak best efficiency at "100%" design flow vs. Specific Speed that is achievable by applying state-of-the-art hydraulic design practices. In addition, the characteristic Head vs. Flow, Efficiency vs. Flow, and Driver Power vs. Flow are illustrated at the top of Figure 3. For example, from the driver power curves one can immediately see that to avoid motor overload, (1) a low specific speed pump should be started against a closed shut-off valve and throttled up to operating flow, while, (2) a high specific speed pump should be started with an open shut-off valve and throttled down to operating flow.

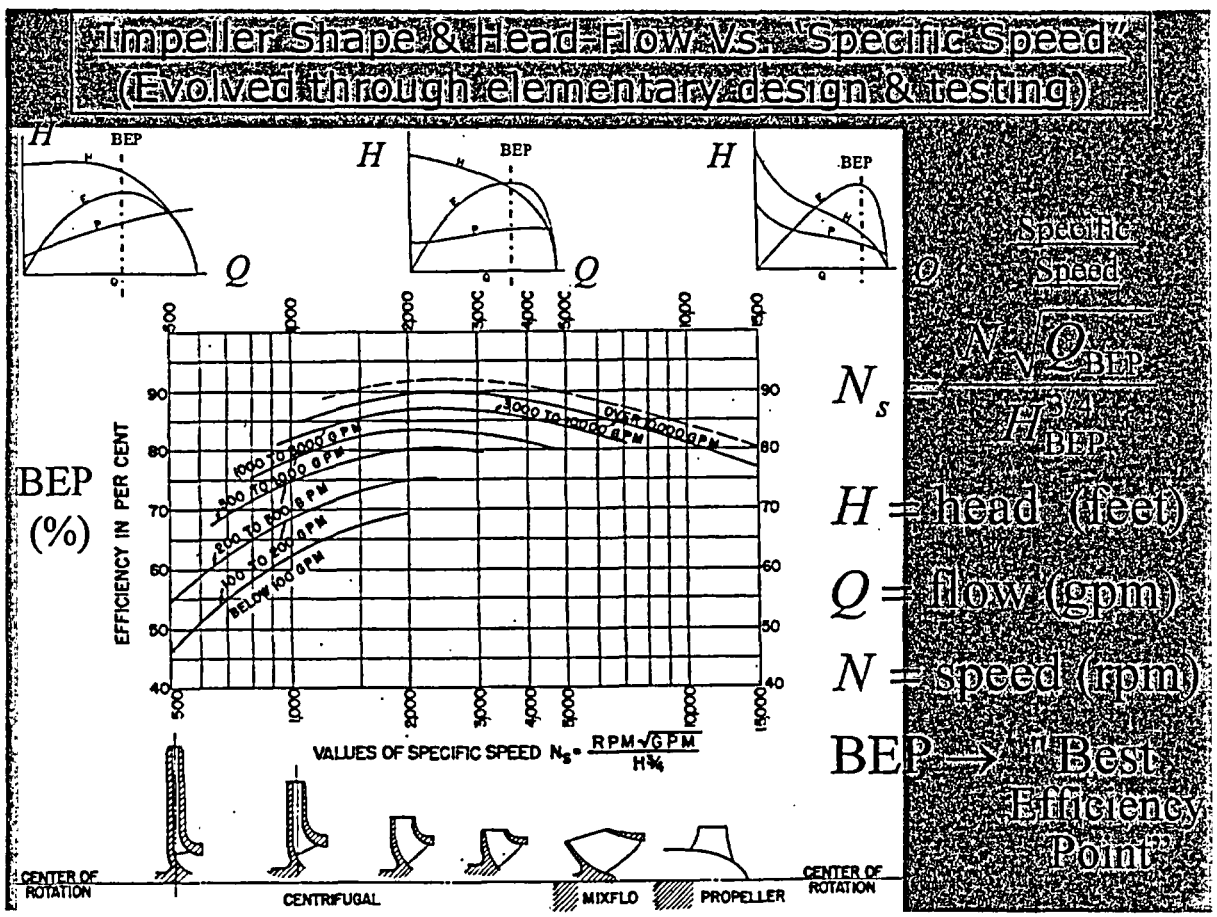

Figure 3. Universal characterization chart for centrifugal pumps

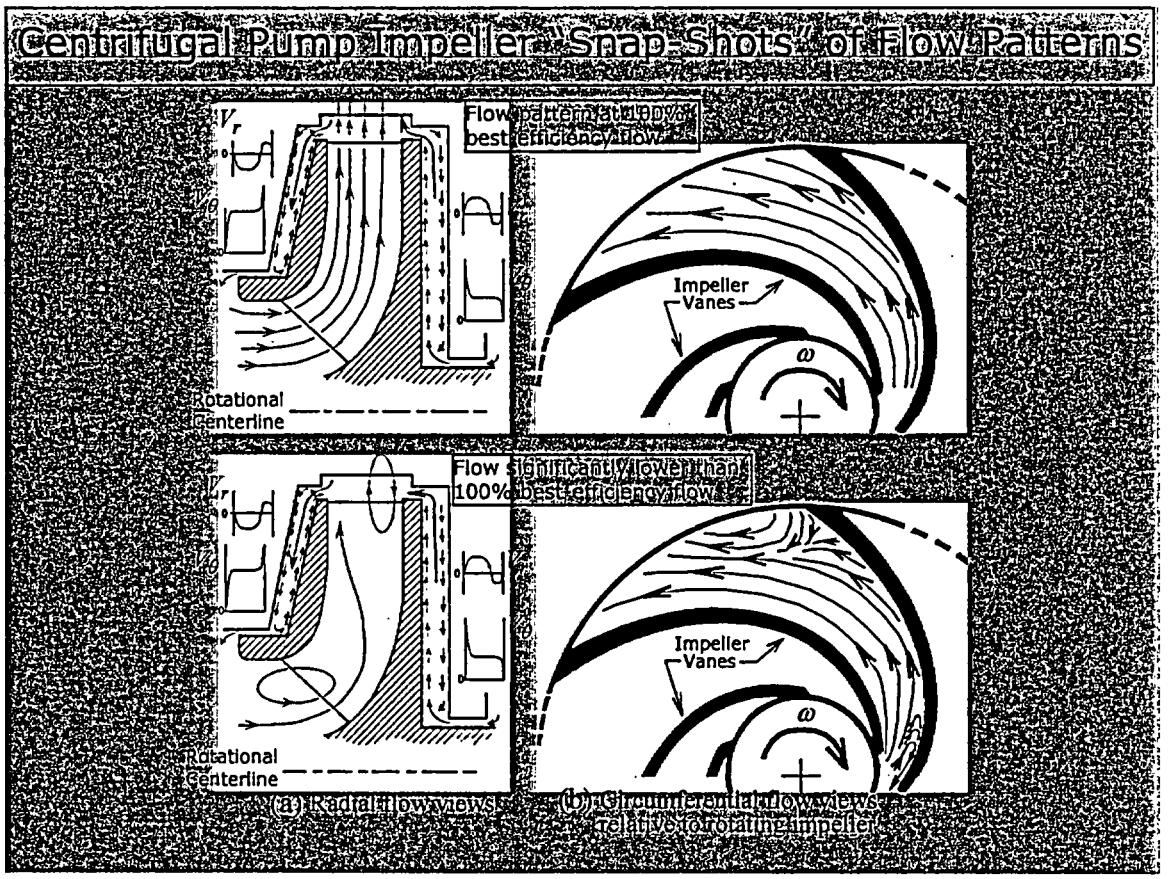

Figure 4. Flow patterns within and around the rotating impeller

Flow complexity and flow-path geometry are typified in Figure 4. Flows in both stationary and rotating internal passages are quite complicated. Even at the best efficiency 100% design flow, the internal flow fields of a centrifugal pump are somewhat ***unsteady***. At off-design operating flows, the internal flows are highly unsteady. Figure 4, providing only instantaneous snap shots, does not convey the flow's strong unsteadiness.

The inherently more challenging task of centrifugal pump hydraulic design, as compared to hydro-turbine design, is illustrated Figure 5. Pump impeller vane flow passages must provide a relatively smooth and gradual transition from flow inlet to outlet, necessitating fewer but longer wrap-around vanes. In contrast, the turbine has more vanes that are relatively short (stubby) in the direction of flow. This fundamental difference stems from the fact that flow inside the pump impeller is being decelerated (i.e., diffused) whereas the turbine impeller flow is being accelerated, like flow in a nozzle. It is fundamental that unwanted flow separation will occur in too rapid a diffusion, but not in a nozzle with rapidly accelerated flow.

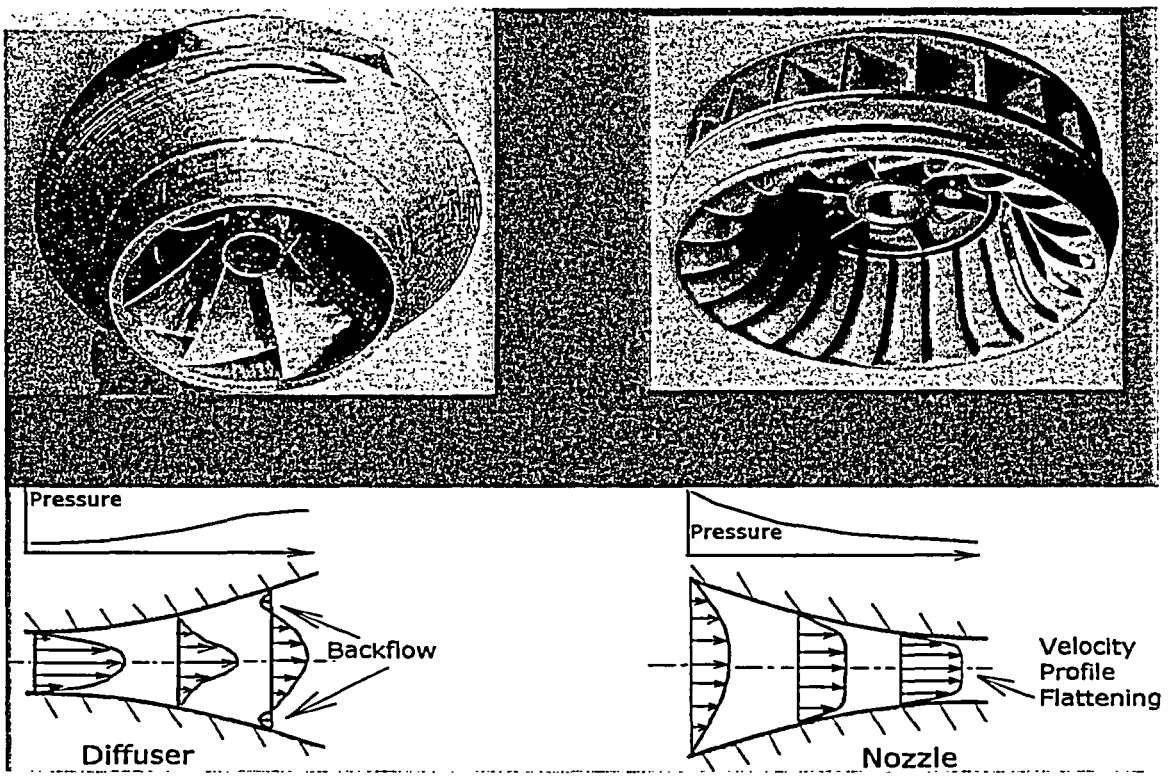

Figure 5. Comparison between a centrifugal pump and a hydro-turbine

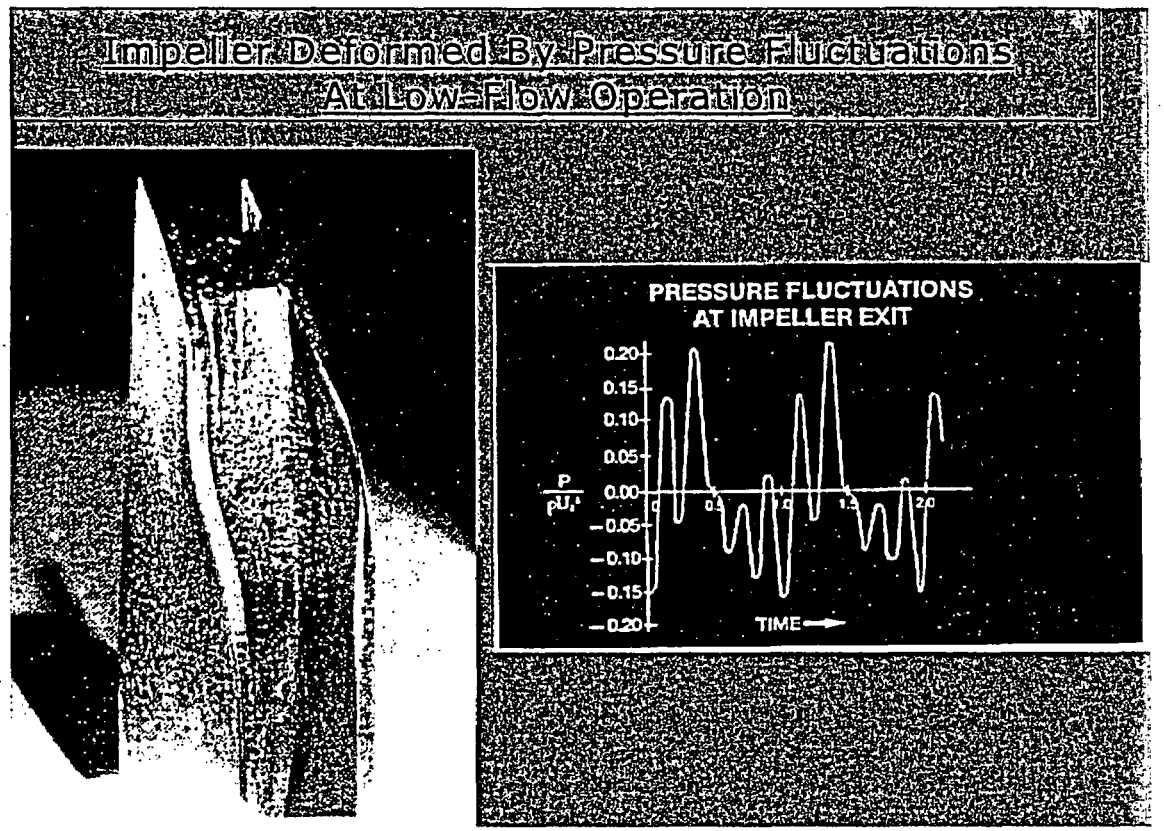

Figure 6. Damage from extended low-flow pump operation

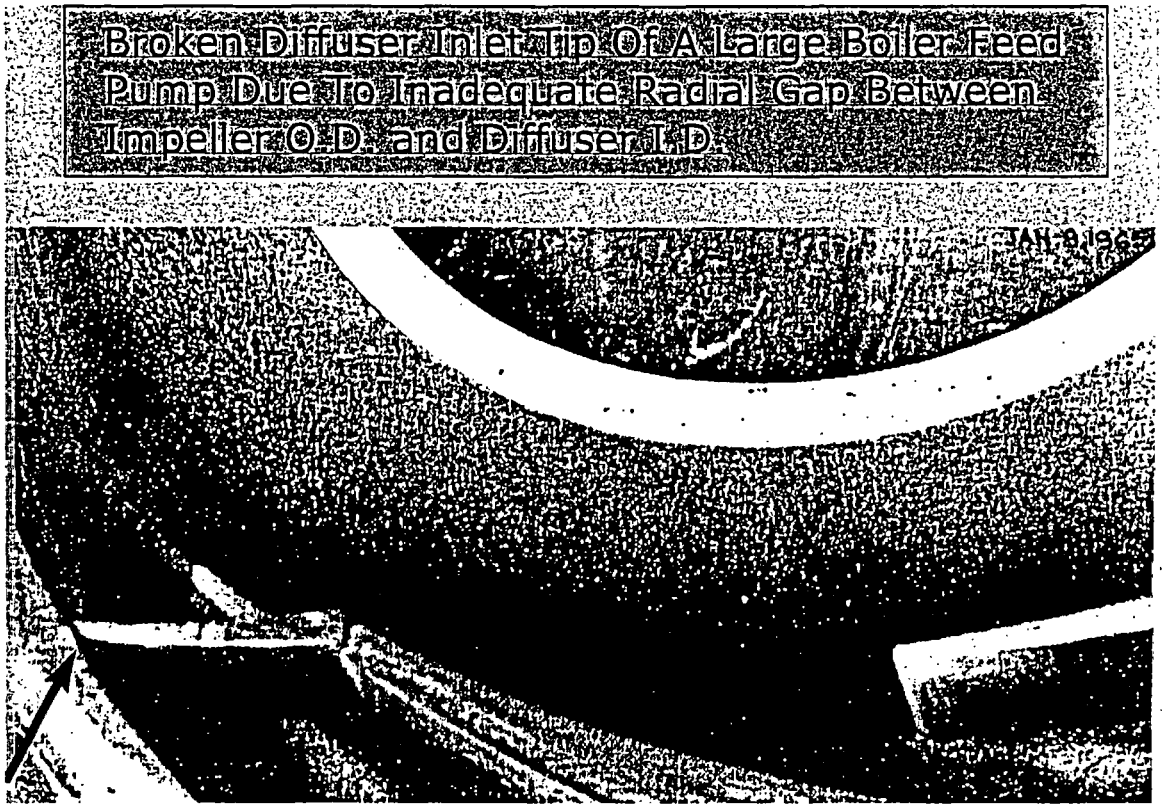

Figure 7. Diffuser vane breakage from unsteady flow hydraulic forces.

The consequences of highly unsteady flow in high energy density pumps can be quickly appreciated from inspection of severely damaged pump internals, e.g., photos in Figures 6 and 7. In addition to internal damage from intensive unsteady flow, it has been long recognized that low-flow pump operation is also likely to cause relatively high vibration levels throughout the pump rotor and bearings. In recent times, the magnitude and frequency spectrum characteristics of impeller (rotor) unsteady-flow forces have been captured in extensive laboratory testing. The 1993 EPRI/Sulzer test results (Figure 8) accurately captured and confirmed that high intensity dynamic impeller forces occur with progressively higher amplitudes as pump operating flow is reduced, and that the energy of these hydraulic forces is concentrated in the frequency range significantly below the once-per-rev synchronous frequency.

Shaft and coupling failures are strongly linked to excessive rotor vibration caused by high intensity internal hydraulic forces. Figures 9 and 10 show prominent examples of pump shaft failures that occurred after a lengthy exposure to high rotor vibration levels. While such shaft failures have long been identified, these types of failures continue to occur in power plants.

Spectra (rms) of Normalized Broad-Band Impeller Forces

"Best Case" combination of very good hydraulic design and high-precision impellers (synchronous component filtered out).

Impeller Unsteady-Flow Radial Forces

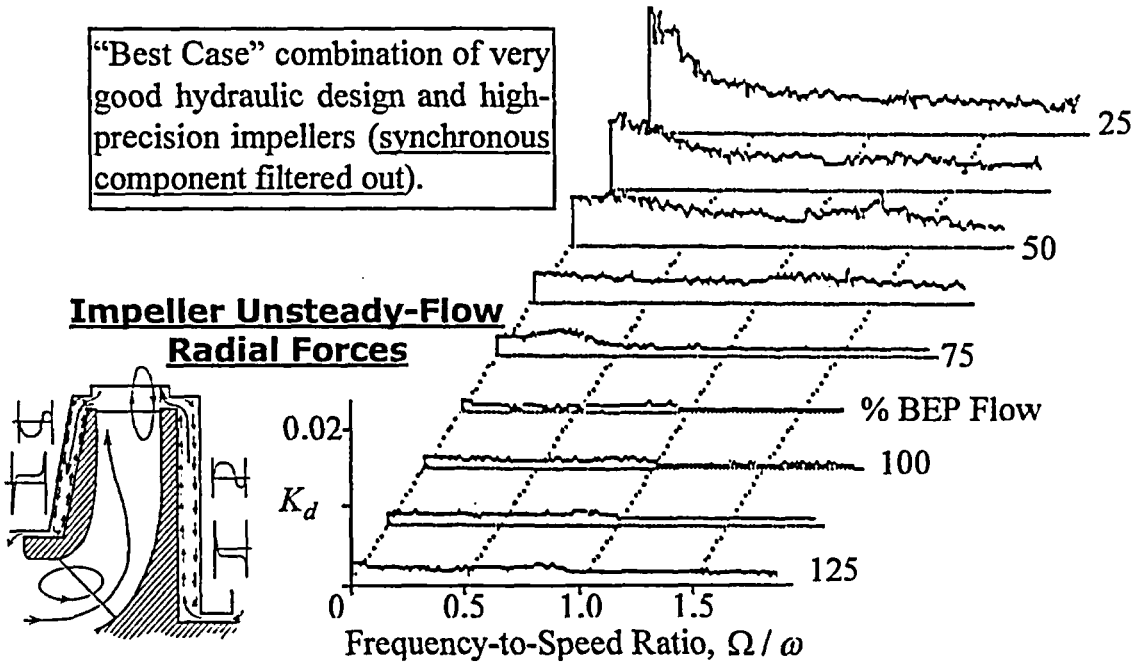

Guelich, J. F., Bolleter, U. and Simon, A., "*Feedpump Operation and Design Guidelines*", EPRI Final Report TR-102102, Research Project 1884-10, 1993. [Research done by **Sulzer Co., Winterthur, Switzerland**]

Pump Gear Coupling Starved Lube and High Vibration

Figure 9. Shaft failure induced by excessive pump rotor vibration

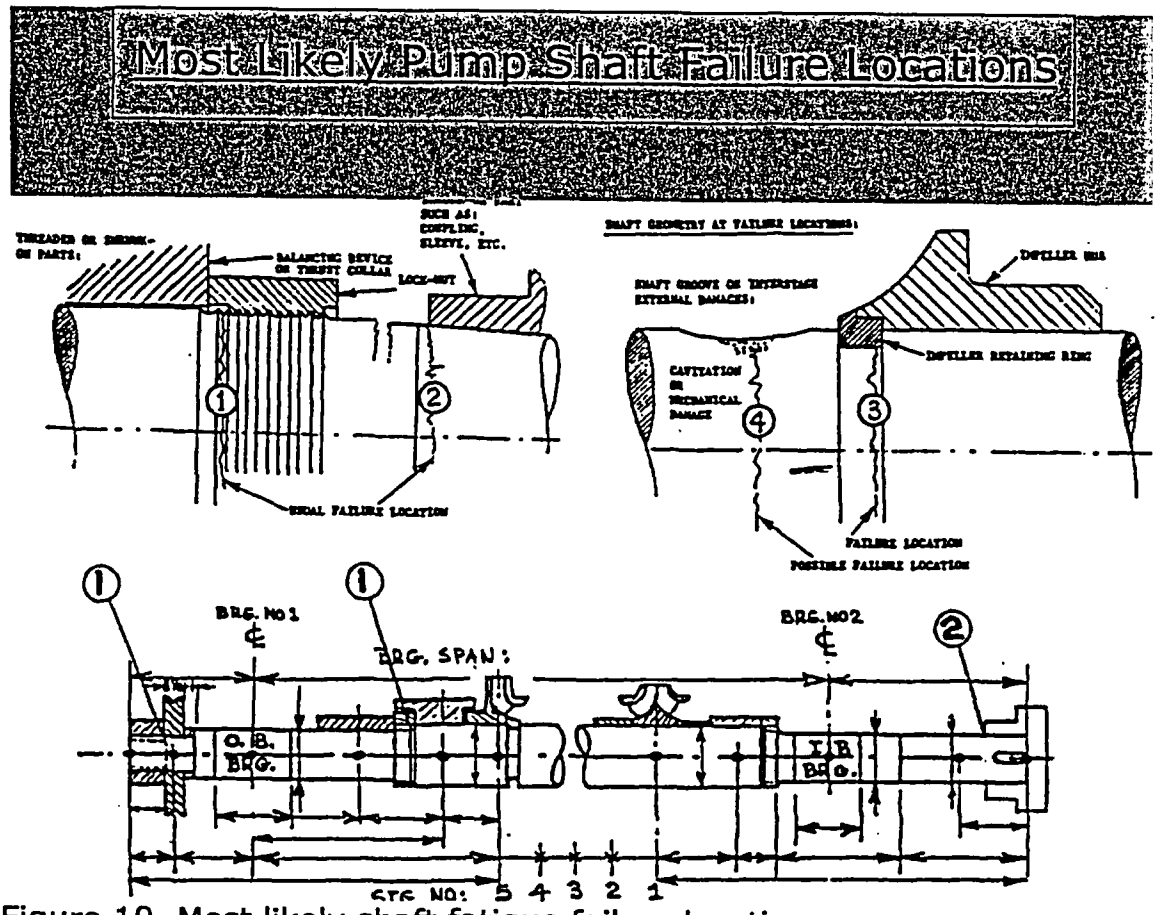

Figure 10. Most likely shaft fatigue failure locations

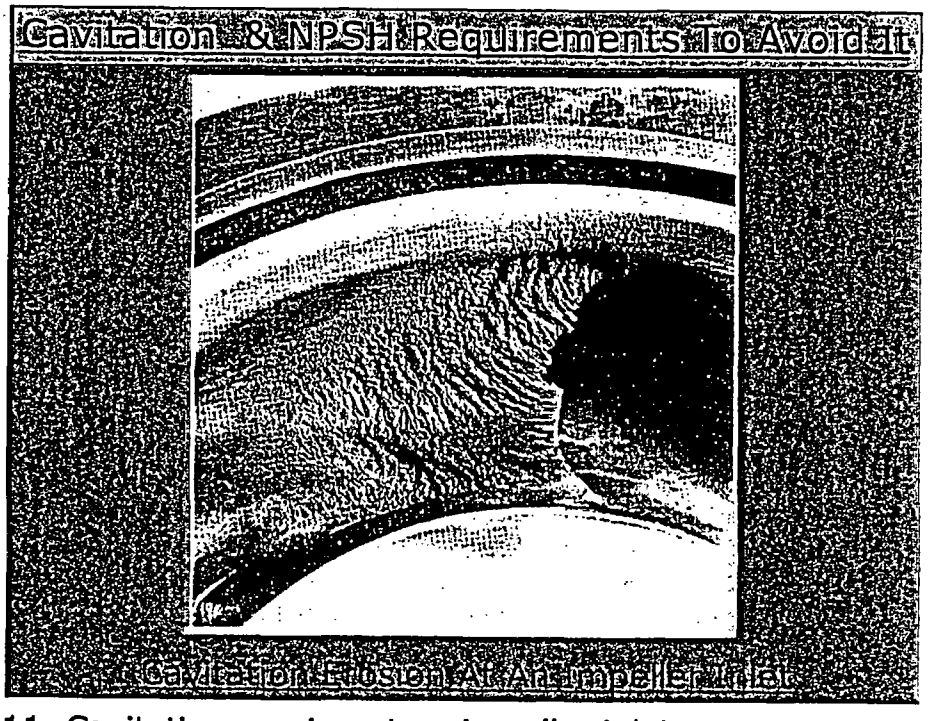

Figure 11. Cavitation erosion at an impellor inlet

Cavitation damage to centrifugal pump impellers, such as shown in Figure 11, is the natural consequence of insufficient Net Positive Suction Head (NPSH) or pressure at the pump flow inlet. This operating phenomenon has been observed almost from the birth of centrifugal pumps early in the 20th century. However, there is still a need for new research to better understand and characterize cavitation, which is a damage/failure mode that can take a long time or a relatively short time to develop and become a obstacle to operability. Figure 12 illustrates the current conceptual understanding of the pump cavitation phenomenon.

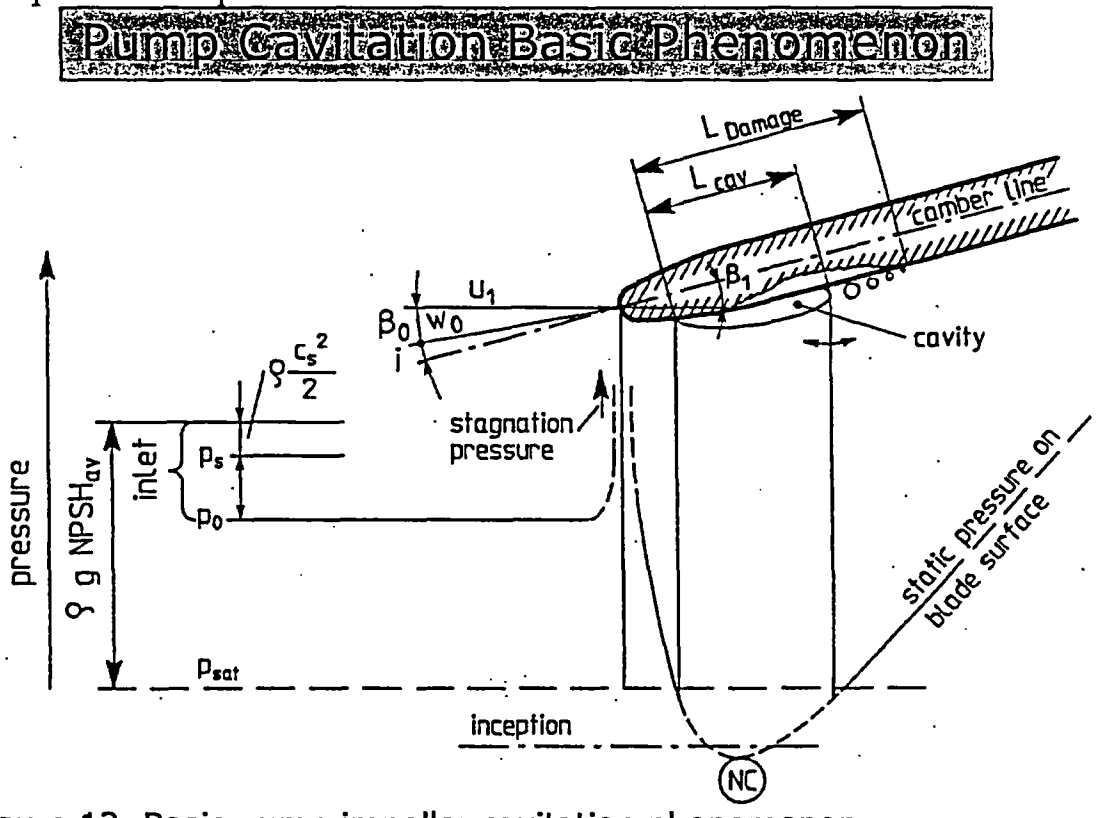

Figure 12. Basic pump impeller cavitation phenomenon

Centrifugal pump flow instability is a further result of the mismatch between the pump operating characteristics and the flow loop in which the pump is operating (see Fig. 13). As with previously discussed hydraulically influenced operating problems and failure modes, flow instability (or surging) is clearly associated with low-flow operation of a pump. Flow surging can yield a pump delivered flow that is highly difficult to properly control. In PWR and BWR plants, such flow control difficulties can potentially disrupt the intended flow delivery that is necessary for critical safety related pumps to operate as intended.

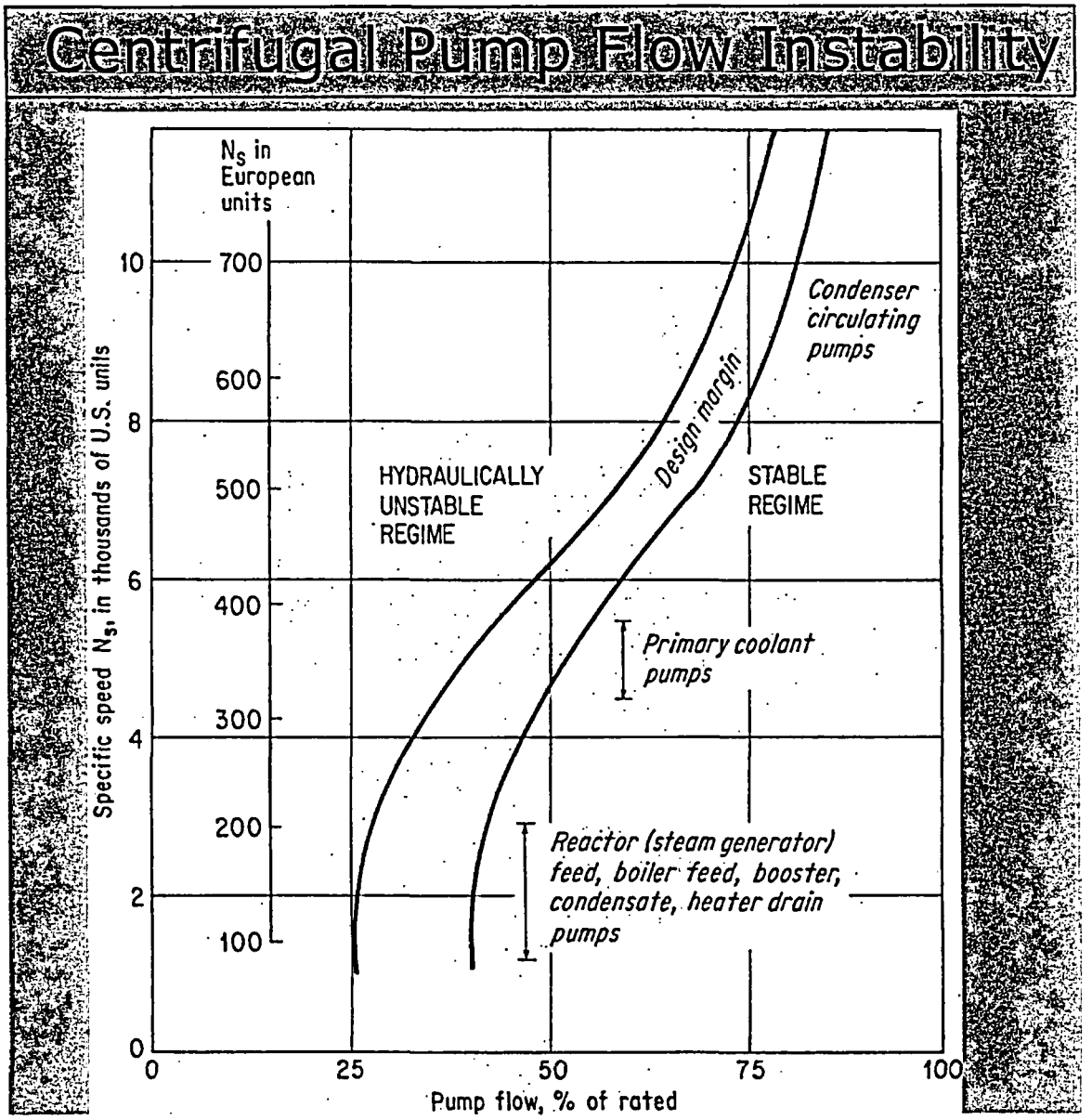

Figure 13. Pump flow instability guideline from extensive experience

3. Theory Of The Centrifugal Pump Impeller

Most power plant pumps now operating have impellers designed before modern computerized ***Computational Fluid Dynamics*** (CFD). The pre-computer age impeller design method still lends itself to an insightful first-principles explanation of how the impeller physically works. However, modern CFD 3D-flow analysis tools can provide new impeller flow passage definition without the extensive laboratory testing required to perfect the pre-computer age impeller designs. How the impeller works is explained here utilizing the assumed 1D-flow inlet and discharge ***velocity triangles*** .

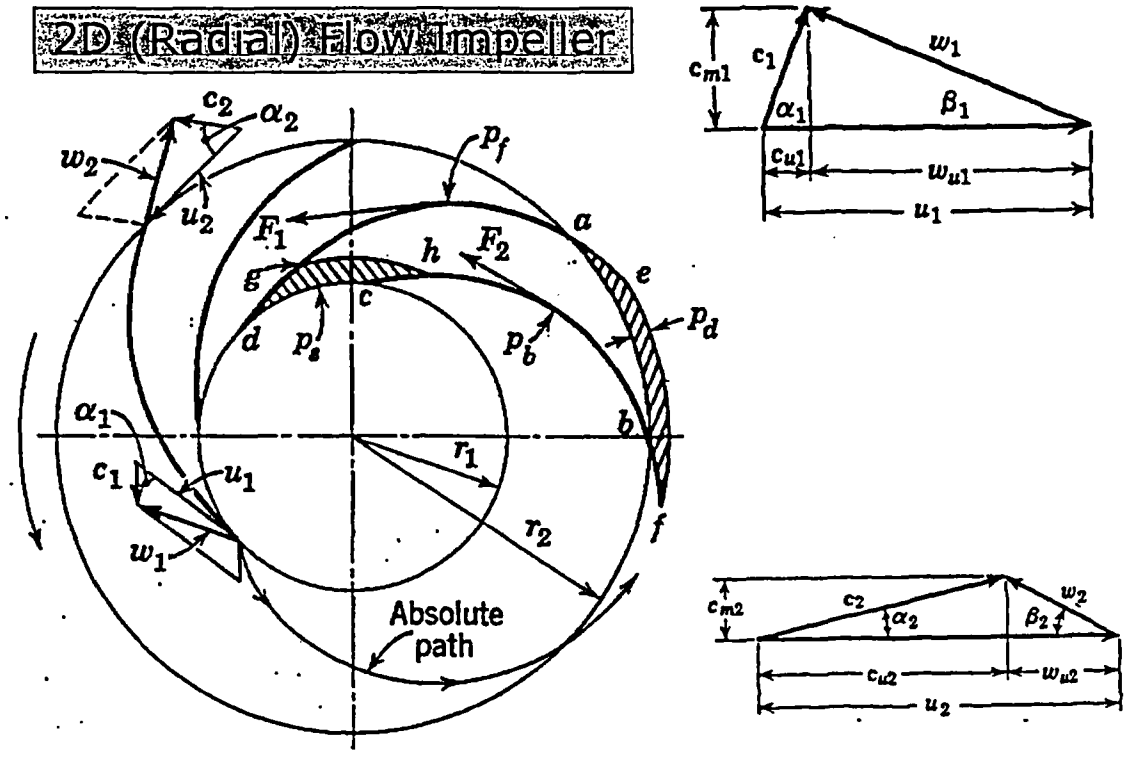

Figure 14. Traditional inlet and discharge velocity triangles.

Newton's 2nd Law (F = ma) determines the torque required of the impeller in order to produce the change in angular momentum of the flow postulated to be passing through the impeller, i.e., the flow's change in angular momentum between inlet and discharge flow "windows". A summary of the theoretical head, flow, and efficiency equations obtained from the ***velocity triangle*** approach is given in Table 2. These relationships provide Euler's theoretical straight-line Head-Capacity (H vs. Q) characteristic for prescribed inlet and discharge flow velocity vector angles, as depicted in Figure 15.

Over decades of centrifugal pump testing and performance improvements, empirical factors evolved to correct for the obvious fact that the impeller flow was far more complicated than the simplistic approach leading to the Euler equation. The optimum number of vanes (typically 5, 6 or 7) cannot provide complete guidance to the impeller flow. Primarily, fluid inertia will resist being fully rotated with the impeller, setting up an internal re-circulation cell in each impeller flow channel between adjacent vanes. This reduces the head produced as indicated by the slip factor correction illustrated in Figure 16, which also shows the discharge flow variation between the impeller shrouds.

Theoretical Head of Pump

Static Head = $H = \dfrac{p_2 - p_1}{\gamma}$ (feet) p = pressure, γ = weight density

Total Dynamic Head $= H + \dfrac{V^2_{discharge}}{2g}$ (feet)

<u>The change of the flow's angular momentum can be equated to the torque required to rotate impeller.</u>

$$T = \frac{dm}{dt}(r_2 c_2 \cos\alpha_2 - r_1 c_1 \cos\alpha_1)\ , \quad \frac{dm}{dt} = Q \quad \text{(flow)}$$

$$\therefore \quad \text{Power} = T\omega = \frac{Q\gamma}{g}\omega(r_2 c_2 \cos\alpha_2 - r_1 c_1 \cos\alpha_1)$$

$$\text{Pump Impeller Output Power} = \gamma Q H$$

$$\therefore \quad H = \frac{u_2 c_2 \cos\alpha_2 - u_1 c_1 \cos\alpha_1}{g} \quad \& \quad \text{Pump Efficiency} = \frac{\gamma Q H}{550 \times \text{bhp}}$$

Table 2. Theoretical impeller BEP head, flow and efficiency

Euler's Equation

$$H = [u_2 c_2 \cos\alpha_2 - u_1 c_1 \cos\alpha_1] / g$$

With zero pre-rotaion impeller inlet flow, $c_1 = 0$ and Euler's equation reduces to

$$H = u_2 c_{u2} / g$$

$$c_{u2} \equiv c_2 \cos\alpha_2$$

$$c_{u1} \equiv c_1 \cos\alpha_1$$

<u>Euler's Head-Capacity Characteristics</u>

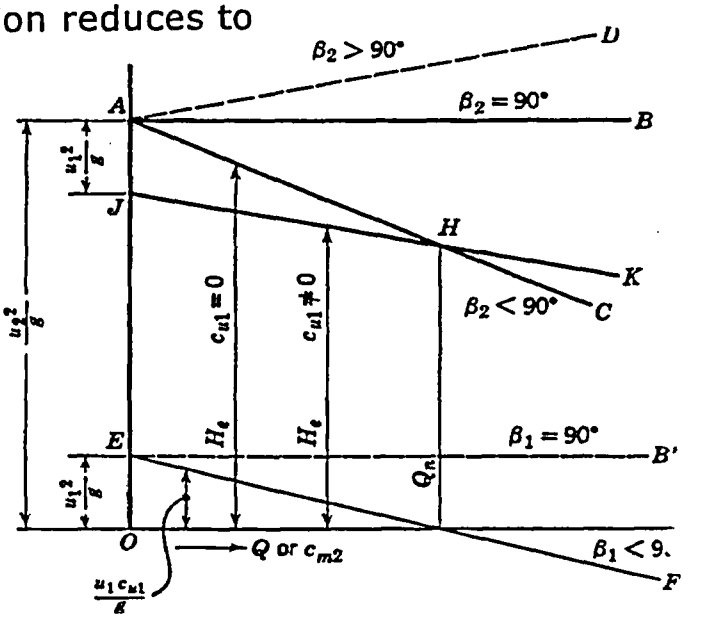

Figure 15. Euler's equation relating pump head and flow

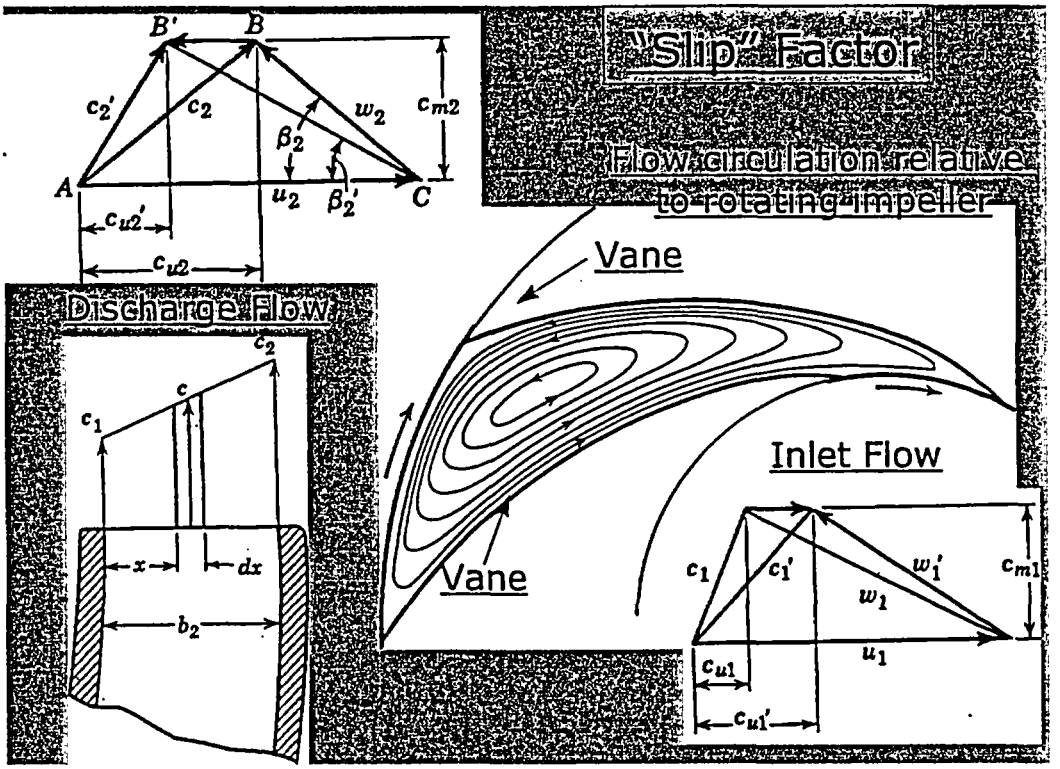

Figure 16. "Slip" factor correction to velocity triangles to account for circulation relative to impeller (pre-computer age empirical factor)

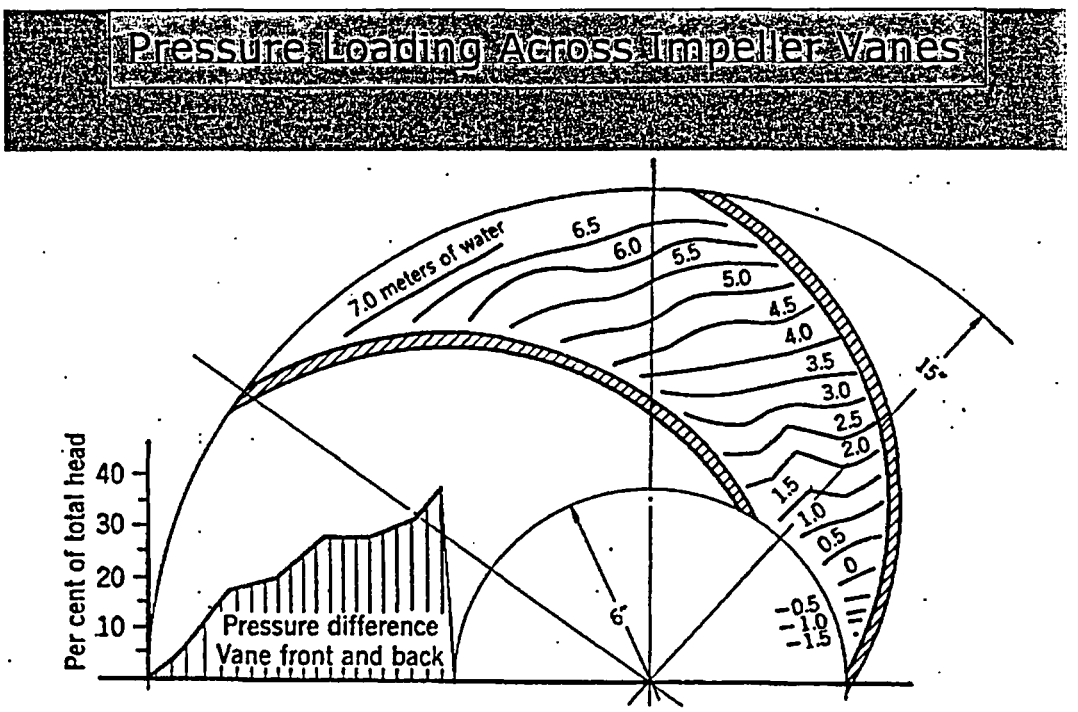

Figure 17. Typical pump vane pressure loading

As illustrated in Figure 17, the vanes of a centrifugal pump not only serve for flow-guidance, but also are structural members that are significantly load bearing. Thus, vane thickness and vane number are of structural importance as well. The simplistic velocity triangle method of impeller design layout is easier to visualize for an impeller geometry in which the flow is primarily radial flow. However, as illustrated in Figure 3, radial flow impeller geometry is optimum only in the lower range of BEP Specific Speed. The velocity-triangle approach is equally applicable to mixed flow (radial and axial flow combined in mid-range specific speed impellers) and axial flow impellers (high Specific Speed range). But the visualization and layout details are more complicated, as typified in Figure 18. At this point in time, such impeller hydraulic layouts are driven by 3D CFD pump flow computer codes and automated solid body graphics codes. But as stated earlier, most power plant centrifugal pumps now in service were designed before current pump flow software was available to designers. Figures 19 and 20 provide a summary of empirical factors relating actual performance to theoretical performance.

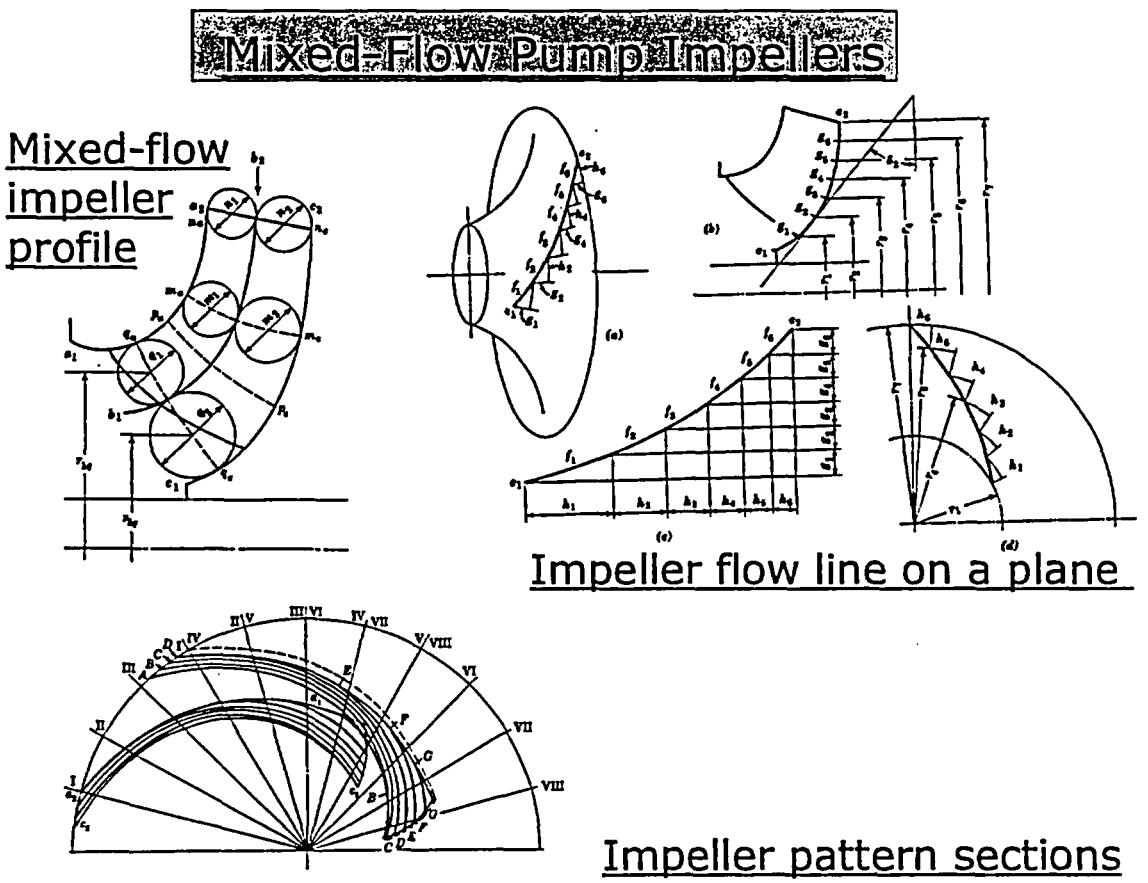

Figure 18. Hydraulic layout of a mixed flow centrifugal pump impeller

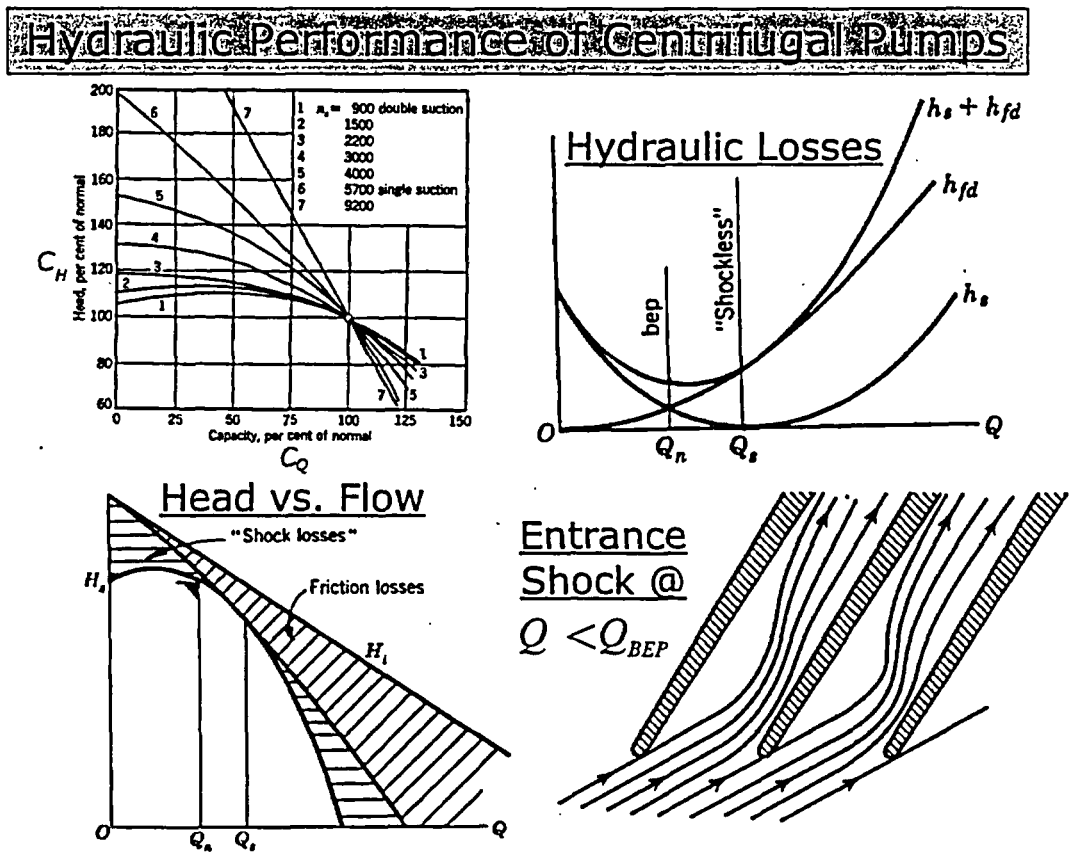

Figure 19. Empirical loss factors for actual pump performance

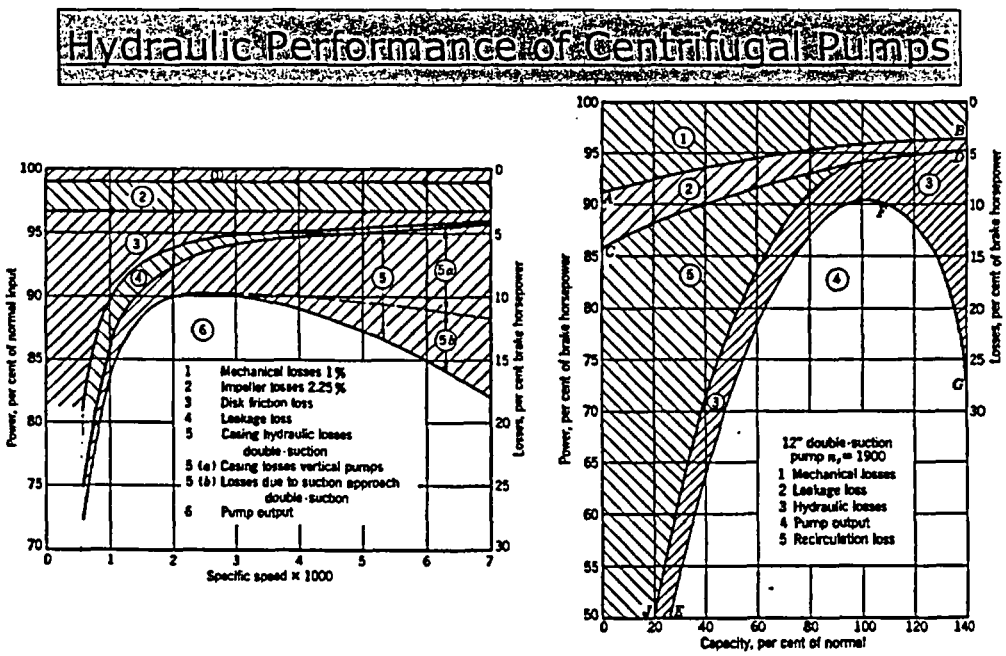

Efficiency Factors

Figure 20. Empirical efficiency factors for actual pump performance

4. Pump Rotor Vibration Analysis Models And Components

As previously stated in Section 2, hydraulic excitation forces on impellers are a major source of pump rotor vibration (see Figure 8). Of course, centrifugal pumps are also potentially vulnerable to the full array of other rotor vibration sources inherent in all turbo-machinery, i.e., critical speeds, self-excited vibrations and flow induced vibrations. Centrifugal pumps are possibly the most challenging turbo-machinery element to accurately model for rotor vibration predictions and simulations. A substantial amount of sponsored research (e.g. EPRI and NASA) has been devoted over the last 25 years to improving the understanding and prediction tools for pump rotor vibration. Figure 21 illustrates that a properly monitored major pump should have at least two shaft-targeting vibration proximity probes at each journal bearing. In most plants, this type of continuous vibration monitoring has been retrofitted on most major pumps. Figure 22 shows the linear rotor dynamics layout for modeling a centrifugal pump. As shown in Figure 22 for centrifugal pumps, it is necessary to include (as added fictitious journal bearings) the interactive forces imposed at the small-radial-clearance inter stage annual sealing gaps.

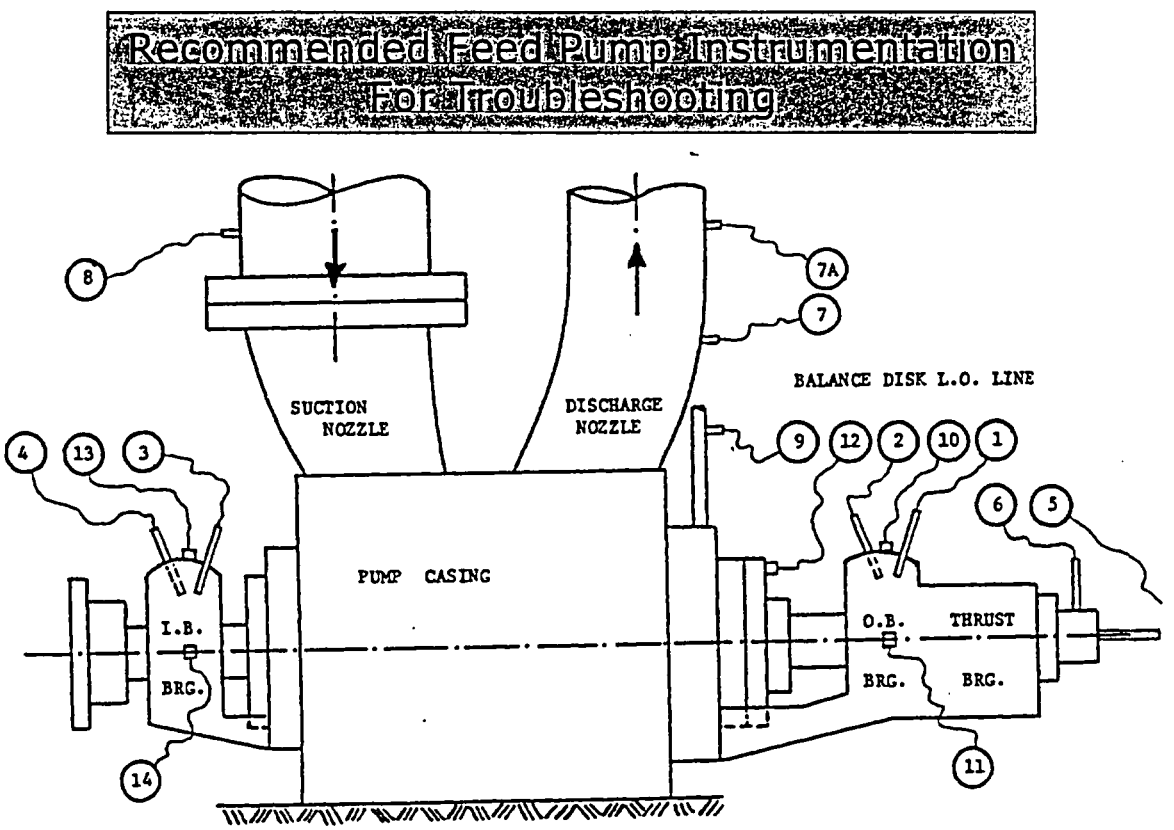

Figure 21. Continuous monitoring of a major power plant pump

Annular Seals
(need to include stiffness, damping & *virtual mass*)

$$\begin{Bmatrix} f_x \\ f_y \end{Bmatrix} = -\begin{bmatrix} k_{xx} & k_{xy} \\ k_{yx} & k_{xx} \end{bmatrix}\begin{Bmatrix} x \\ y \end{Bmatrix} - \begin{bmatrix} c_{xx} & c_{xy} \\ c_{yx} & c_{yy} \end{bmatrix}\begin{Bmatrix} \dot{x} \\ \dot{y} \end{Bmatrix} - \begin{bmatrix} m_{xx} & m_{xy} \\ m_{yx} & m_{yy} \end{bmatrix}\begin{Bmatrix} \ddot{x} \\ \ddot{y} \end{Bmatrix}$$

$$k_{ij} \equiv -\frac{\partial F_i}{\partial x_j}, \; c_{ij} \equiv -\frac{\partial F_i}{\partial \dot{x}_j} \text{ and } m_{ij} \equiv -\frac{\partial F_i}{\partial \ddot{x}_j}$$

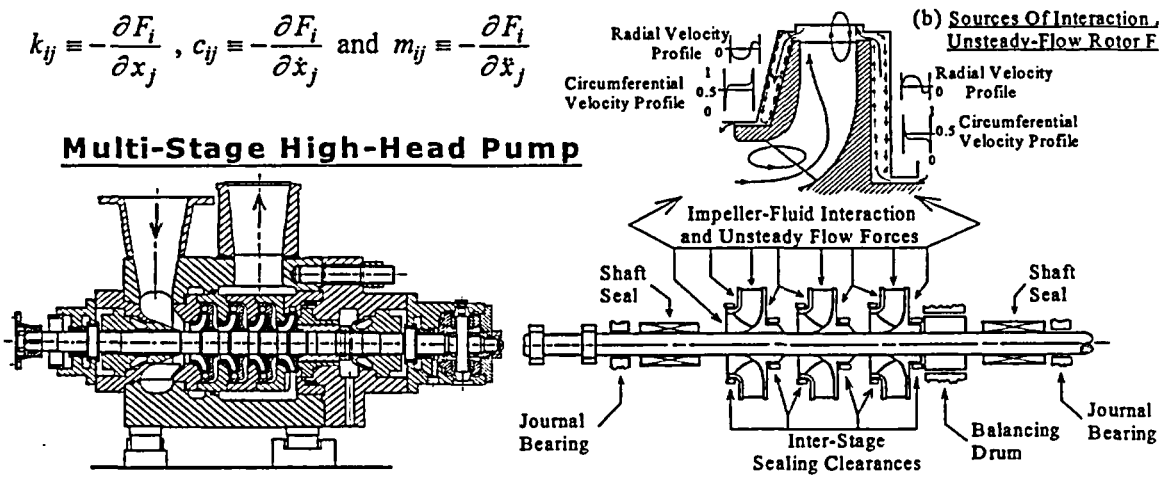

Figure 22. Sources of interactive and unsteady-flow pump rotor forces

A complete up-to-date treatment of rotor dynamic modeling of centrifugal pumps and other rotating machinery is given in Reference [1]. Table 3 provides numerical inputs commensurate with hydraulic forces (see Fig. 8).

Dynamic Radial Hydraulic Pump Impeller Forces

- **Strictly time-dependent *unsteady flow forces***
- ***Interaction forces* produced in response to LRV orbital motions**

Unsteady-Flow Dynamic Radial Force Empirical Factor

$$K_d(rms) = \frac{P_{d\,(\mathrm{rms})}}{\rho g H D_2 B_2}$$

K_d: **Experimental Value Ranges**

Q / Q_{BEP}	Ω / ω = 0.02 to 0.2	Ω / ω = 0.2 to 1.25	Ω / ω = 1	Ω_v
0.2	0.02 - 0.07	0.02 - 0.05	0.01 - 0.12	0.2 - 0.1
0.5	0.01 - 0.04	0.01 - 0.02	0.01 - 0.12	0.1 - 0.0
1.0	0.002 - 0.015	0.005	0.01 - 0.13	0.1 - 0.0
1.5	0.005 - 0.03	0.01 - 0.02	0.01 - 0.15	0.2 - 0.1

P_d = dynamic force (rms), Ω = force frequency, ω = speed, Ω_v = Vane No. x ω
K_d values for Ω / ω = 0.2 to 1.25 have Ω / ω = 1 component filtered out.

Table 3. Time-dependent hydraulic rotor forces (illustrated in Fig. 8.)

5. Model-Based Condition Monitoring And Prognostics

If future major applications of rotating machinery are to be economically successful in an environment of greatly *reduced maintenance personnel* and very few available *true experts*, then new yet-to-be-introduced *machinery management systems* will be required. Development of such new systems is a topic of extensive ongoing research in the Rotating Machinery Laboratory at CWRU. For example, the CWRU team has developed model-based monitoring-prognostic software that incorporates an array of machine-specific vibration models, specific to an extensive array of operating modes as well as fault types and severity levels. As illustrated in Figure 23, each model (called an "observer") operates in real-time and encodes a particular operating mode or fault (type and severity level) that is important to the safe and continued operation of the machinery. The outputs of these observers are the vibration signals that would be expected if the system was operating according to the model parameters of the observer. The observers are dynamic systems driven by the actual measured vibration signals from the machine being monitored. The observer outputs are continuously combined with the actual monitored vibration signals from the machine and correlated through a novel set of statistical algorithms and model-based filters, as summarized by Loparo and Adams (1998, 2000, Appendix-B Bibliography). In this real-time continuous process, each observer, driven by the monitored vibration signals of the machine, is being driven in manner that makes each observer replicate (or follow) the actual monitored vibrations signals as best as possible.

From the mismatch between the measured vibration response of the machine and the predicted vibration response (the residuals) as determined by each observer, a set of probabilities is generated. These probabilities statistically quantify the match between each observer's output and the actual measured vibration signals for each fault type and severity level potentially in progress. The observer that best matches the current operating condition will have the highest probability in the set, and this observer will determine the operating condition which is the most likely at the current operating time. Note that this type of real-time monitoring system has the advantage of providing for the simultaneous detection and isolation of faults and unwanted operating conditions.

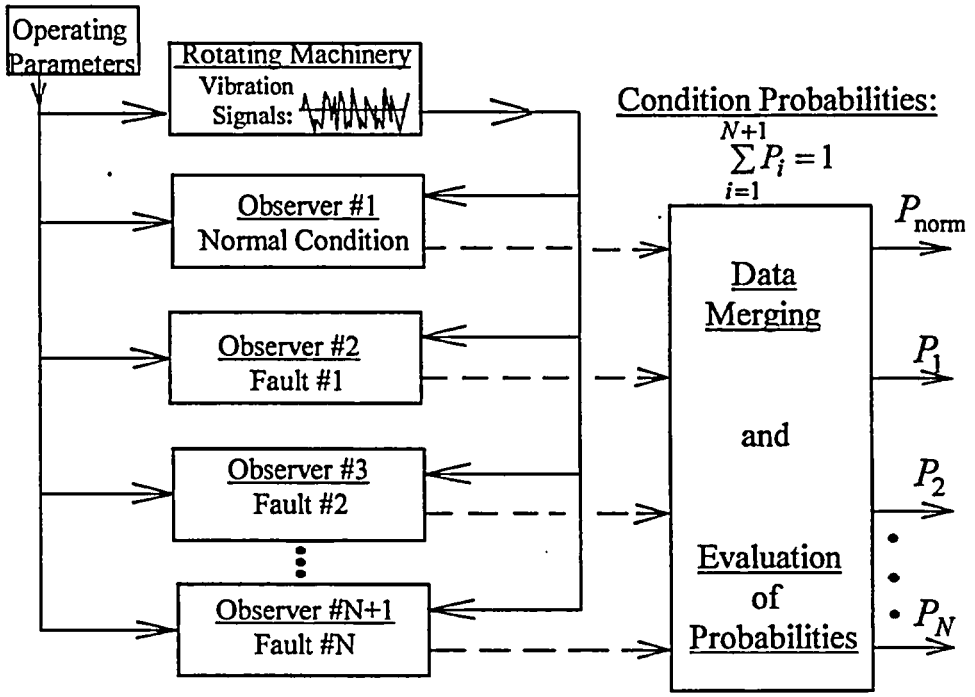

Figure 23. Real-time probabilities for defined faults and severity levels

The dynamic models of the machine's vibration response encoded in the observers are also employed to remove measurement signal "noise" that does not statistically correlate with the model's response. In contrast to conventional signal noise filtering techniques where "noise" is removed based on time signal morphology or frequency domain characteristics, such model-based statistical-correlation filtering allows the retention of low-level and fine-structure signal components that are correlated with the physical model. One of the many interesting and important findings by the CWRU team is that the various fault and fault-level specific observer vibration models do not have to be as "nearly perfect" as one might suspect. Because the set of probabilities is constrained to sum to one, a model (observer) only needs to be representative enough of its respective operating mode to "win the probability race" among all the other "observers" when its fault (or fault combination) type(s) and severity level(s) are in fact the dominant operating condition. Compared to the rule-based approach inherent in so-called "expert systems", this *physical model-based* statistical approach is fundamentally much more open to correct and early diagnosis, especially of infrequently encountered failure and maintenance related phenomena and especially conditions not readily covered within a rule-based "expert system".

An important additional benefit of a model-based diagnostics approach is the ability to combine measured vibration signals with observer vibration computer model outputs to make real-time determinations of rotor vibration signals at locations where no sensors are installed. Typically, vibration sensors are installed at or near the bearings where sensor access to the rotor and survivability of sensors dictate. However, at mid-span locations between the bearings is where operators would most like to measure vibration levels, but can not because of inaccessibility and hostile environment for vibration sensors. Thus, the model-based approach provides "virtual sensors" at inaccessible rotor locations. Another important attribute of the model-based approach is that it can be easily extended to include prognostics. Because the observer models are derived from the physics of the machine, they can be used to provide a prediction of the equipment's future vibration response to additional faults, increased loading, etc. This predicted vibration response is then used in conjunction with quantitative failure mode analysis methods to determine the remaining useful life (RUL) of the equipment. In this way, maintenance and operating personnel are continuously aware not only of the current operating state of the equipment, but also of the equipment's ability to withstand future operating conditions and continue to operate in a safe and reliable manner. It is also important to note that the model-based techniques proposed in this application are relevant not only to the pumps as an individual unit, but also to the motor-pump system. In the motor-pump system, the dynamics of the motor and the pump, as well as the dynamic interactions between them, are included in the observer models. In this way, if it is determined that the motor is healthy, then information from the motor, such as operating voltages, phase currents, etc. can be used as additional measured variables to diagnose pump health, and visa versa. The CWRU research team has had considerable experience in the area of fault detection, diagnosis and prognosis of motor driven equipment.

The field of modern condition monitoring for rotating machinery is now over forty years into its development and thus is truly a matured technical subject. However, it continues to evolve and advance in response to new requirements to further reduce machinery down time and drastically reduce maintenance costs. This driving motivation is particularly true for critical safety related pumps in PWR and BWR nuclear power plants.

6. Scope Of Work

The mission of this project is to develop and successfully demonstrate model-based observers for *Condition Monitoring and Prognostics* (CMAP) of safety related motor-pump systems. This will of course include building upon those aspects of the CWRU team's recent successes in utilizing monitored machine vibration signals, as discussed in the previous section. However, this mission will also necessitate the development of new *Thermal Hydraulics Models* (THMs) that will be used to develop observers that capture a pump's internal flow and component conditions (e.g., wear, aging and general operability factors). Successful development of the THMs will likely require steady and unsteady pump flow 3D CFD analyses combined with specific pump stage laboratory testing on full size stages, to ascertain the monitored real-time signals (flows, pressures, temperatures, etc.) that will be needed to adequately drive the real-time THM condition and fault detection observers. Furthermore, it is realistically anticipated that motor operating parameters in conjunction with ***machine vibration*** monitored signals and the corresponding fault detection observer models will have strong ***statistical correlation*** with the **THM** fault detection observer models. Therefore, it is likely that the optimum set of fault/condition observers for a pump will incorporate a coupled mix of motor, vibration and THM test validated models. Clearly, it is well known from decades of successful power plant pump troubleshooting that pump internal hydraulic conditions have a close correlation to pump vibration conditions (e.g., recall Figure 8 and Table 3). For example, imbalance caused by an internal fault on the motor or the pump, or the injection of a foreign object in the pump will result in vibration signals that can be easily identified by a model-based detection and diagnostic system using external sensors data. Additionally, foundation faults (such as the deterioration of foundation material, loosening of connections, cracks in the foundation, etc.) can also be detected by a carefully instrumented model-based vibration monitoring system. The measured vibration signals will be used in the CMAP system that will be developed in this project to detect and diagnose the possible causes of problem. Attainment of these objectives will also involve the development of a fully instrumented pump flow loop with an optically clear pump (to facilitate use of laser based laboratory optical techniques), in collaboration with Flowserve, that will simulate the conditions encountered in nuclear power plant operation in a laboratory test environment. The pump loop will have the capability of simulating different operating conditions, e.g. ingestion of foreign material, inception of

cavitation, off-design operating conditions, various distress conditions and faults, etc. The pump loop will be thoroughly instrumented to obtain the pump flow field (particle Image Velocimetry), the operating parameters of the motor, the vibration signals from motor, the pump and the foundation. The ability to introduce motor, pump and foundation faults will be included in the pump loop test system. This will allow the researchers to develop and calibrate physics-based models of the system by correlating measured signals obtained from the probes on the motor, pump body, and foundation with the operating characteristics of the system.

Accordingly, this 4-year project is envisioned to be composed of four sequential 1-year missions. **Year-1** will be comprised of the basic research investigations needed to identify the viable observer model formulations and the specifications of the corresponding real-time monitored signals that will be required for continuous monitoring of the motor-pump-foundation system for major specific pump services in PWR and BWR plants. The first year efforts will also include the design of the pump flow loop. **Year-2** will include the completion of the pump flow loop and the development of the complete family of fault and condition observers for each one of the major critical safety related PWR and BWR centrifugal pump types. Naturally, it is expected that a certain amount of iteration between the Year-1 and Year-2 missions will ultimately be dictated, as more fundamental modeling knowledge is accrued. **Year-3** will include the completion of the laboratory tests of the operational conditions in the pump flow loop and the beginning of the Beta testing of the model-based observers on full size pumps under actual operating conditions. **Year-4** will see the completion of the Beta testing mode started in the previous year. Ideally, this would include both shop testing and in-plant testing on pumps in service. The practicality of in-plant testing is difficult to assess at this proposal stage of the overall undertaking.

Year-1

Task-1: Explore and identify all potentially viable/practical real-time monitored signals (e.g., voltages, currents, vibrations, pressures, temperatures, acoustic emissions, forces, strains).

Task-2: Design laboratory scale optically clear pump and the pump flow loop to simulate the nuclear reactor operating conditions and manufacture. Design pump experiments.

Task-3: Develop mathematical observer models (e.g., vibration equations of motion, hydraulic steady & unsteady flow formulas, acoustic emissions correlations, thermal hydraulics factors, etc.) to adequately capture the internal condition states of a motor and centrifugal pump system.
Task-4: Deliver interim report on Year-1 scope of work.

Year-2

Task-1: Debug the pump flow loop and commence tests as per the designed pump experiments. Test the identified practical real-time monitored signals for correlation to internal motor-pump conditions and early fault detection. Utilize 3D CFD simulation analyses combined with laboratory testing, where appropriate.

Task-2: Analyze and delineate the different CMAP needs for each specific critical pump service. Develop a specification for the specific real-time monitored time-base signals and corresponding compliment of observer models for each pump type/service.

Task-3: Develop the complete family of fault and condition observers for each one of the critical safety related PWR and BWR centrifugal pump services.
Task-4: Deliver interim report on Year-2 scope of work.

Year-3

Task-1: Scope and analyze likely prospective shop and in-plant tests pumps for the Year-3 mission.

Task-2: Engineer test set up for shop tests and develop test matrix.

Task-3: Engineer in-plant test set-up and develop test matrix.

Task-4: Conduct the in-shop tests.

Task-5: Deliver interim report on Year-3 scope of work.

Year-4

Task-1: Evaluate success of testing in Tasks 1 and 2 of the Year-3 effort.

Task-2: Use output of Task-3 of Year-3 to make needed changes to sensor types/placements and observer tracking qualities.

Task-3: Deliver final report on Year-1, Year-2, Year-3 and Year-4 work and results.

7. Deliverables

Successful execution of this 4-year project will produce a quantum positive change in the ***Condition Monitoring and Prognostics*** (CMAP) of nuclear power plant pumps and thereby provide a set of invaluable tools to substantially increase the safety and reliability of the aging fleet of U.S. nuclear power plants. Furthermore, it is logical to assume that spin-offs from the technology developments of this project will lead the way to significant improvements in model-based/assisted CMAP utilization for the safety and reliability of other critical nuclear power plant systems.

The CMAP technology to be developed in this project is of course aimed at improved reliability assessments for the critical continuously operating pumps such as RCPs and RRPs and FWPs. But it is also focused on substantially increasing the assurance of operational readiness of critical standby pumps such as auxiliary feed water pumps (AUXFP) and high pressure injection pumps (HPI). For example, more informative quarterly part-flow testing will be enabled by implementing model-based CMAP that will be able to reconstruct head-capacity characteristics over the full intended operating range of these pumps as needed under actual emergency conditions. Thereby any significant and otherwise undetectable ***performance degradations*** can be isolated for expedient correction.

The overwhelming question of ***remaining plant life*** of each of the aging fleet of U.S. nuclear power plants is by itself a sufficient driving force to bring model-based CMAP technology to critical nuclear plant systems such as pumps. The benefits to nuclear plant operation and general safety assurances can be elevated to significantly new high levels by developing model-based CMAP that incorporates and captures the coupled interactions among all the critical-sensor monitored operating real-time signals, e.g., motor voltages and currents, vibrations, pressures, flows, forces, strains, temperatures and acoustic emissions.

The introduction of the CMAP technology into the fleet of U.S. nuclear power plants will be expedited and insured through the ***Agreement between Flowserve and CWRU***, which is given in Appendix-C of this proposal.

8. Budget Requested

TITLE: MODEL-BASED CONDITION MONITORING FOR CRITICAL PUMPS IN PWR AND BWP NUCLEAR POWER PLANTS

DATES: 6/1/04-5/31/08

	Year 1	Year 2	Year 3	Year 4	
M.L. Adams, PI, 30% AY, 3 mos. Summer	57576	60166	62874	43802	Year 4 20% AY, Summer
K.A. Loparo, Co-PI, 20% AY, 2 mos. Summer	51508	53826	56248	29390	Year 4 10% AY, Summer
J. Kadambi, Co-PI, 20% AY,2 mos. Summer	37471	39157	40920	21169	Year 4 10% AY, Summer
D. Zeng, Co-PI, 20% AY, 2 mos, Summer	37945	39653	41437	21651	Year 4 10% AY, Summer
Senior Research Associate	60000	61800	63654	65564	
4 Graduate Research Assistants-Master's	151560	0	0	0	
4 CSE Fellows	0	125440	132720	136702	
Salary Subtotal	396060	380042	397852	318277	
Fringe Benefits @ 26%/27&/27%/27%	63570	68743	71586	49025	
Total Salaries	459630	448785	469438	367302	
Non-Salaraies					
Travel	10000	10000	10000	15000	
Supplies	20000	20000	20000	20000	
Flow Serve Corp - Subcontract	125000	125000	300000	100000	
Equipment	300000				
Total Non-Salaries	455000	155000	330000	135000	
Total Salaries and Non-Salaries	914630	603785	799438	502302	
Overhead @ 53%	272754	253756	264702	213220	
Note: Overhead taken on first $25,000 of subcontract only					
TOTAL BUDGET	1187383	857541	1064140	715523	
TOTAL FOUR YEAR BUDGET	3824587				

Total 4-Year Budget Requested $ 3,824,500

9. Cost Sharing

In addition to the availability of the facilities in the Rotor Dynamics Laboratory and the Laser Flow Diagnostics Laboratory of Case Mechanical & Aerospace Engineering Department, CWRU will also cost share by providing the full academic year stipend and tuition for the four Case Prime Fellow Ph.D. graduate students during the first year of the project and then provide partial tuition credit for the next three years. The cost share budget is as follows.

	Year 1	Year 2	Year 3	Year 4
4 CSE Fellows	137,160	38,912	42,816	44,100
Overhead @53%	72,695	20,623	22,692	23,373
Total	209,855	59,535	65,508	67,474

TOTAL COST SHARE 402,372

The CWRU cost share is about 10.6 % of the proposal budget.

10. Summary Vitae Of Principal Investigators & Consultants

Principal Investigator

Maurice L. Adams, Jr., Professor
Dept. of Mechanical & Aerospace Engineering
The Case School of Engineering
Case Western Reserve University
Cleveland, OH 44022-7222
Tel/Fax (216) 368-6449/6445
E-mail: mla5@mae.cwru.edu

Education
B.S.M.E. Lehigh University., 1963
M.Engr.Sc. Penn State University., 1970
Ph.D. M.E. University of Pittsburgh, 1977

Earned both advanced degrees while working full-time in industry

Industrial Employment

(1971-1977) WESTINGHOUSE, CORPORATE RESEARCH LABORATORIES (Pittsburgh)
Senior Engineer & PI on corporate R & D projects for rotating machinery research; bearings & vibration, and consulting for corporate divisions.
(1967-1971) FRANKLIN INSTITUTE RESEARCH LABORATORIES (Philadelphia)
Research Engineer in rotating machinery research & development on bearings & vibration. Research applied to machine tools and turbo-machinery.
(1965-1967) WORTHINGTON CORPORATION, ADVANCED PRODUCTS DIVISION (Harrison, NJ)
Design Engineer in development of new generation turbo-machinery lines. Worked in all aspects, including turbo-stage aerodynamics and flow path design, bearings, seals and rotor vibration design analyses and testing.
(1963-1965) ALLIS-CHALMERS, HYDRAULIC PRODUCTS DIVISION (York, PA)
Hydraulics Engineer in hydraulic turbine and valve design and testing. Naval nuclear vessel fabrication design and non-destructive testing.

University Employment

(1982-Present) CASE WESTERN RESERVE UNIVERSITY (Cleveland, OH)
Professor (Tenured 1984, Promoted 1986) Mechanical & Aerospace Engineering Dept. Graduate and undergraduate teaching, advisor to several PhD & MS students, extensive funded research on machinery dynamics, bearings, seals and tribology.
(1977-1982) THE UNIVERSITY OF AKRON, **Associate Professor** (Tenured 1982) Department of Mechanical Engineering. Graduate and undergraduate teaching, advisor to graduate students, funded research on machinery dynamics.

Focus of Current and Recent Research

Rotor dynamics & tribology of bearings & seals, rotor rub-impact phenomena, model-based remote sensing for machinery condition monitoring, rotor-mounted controlled-mass balancers as actuators for condition-monitoring dynamic-force probers, development of new bearing concepts for next-generation centerless grinders and surface grinders; active real-time spindle rotor balancing. Developed an extensive test laboratory at CWRU devoted to these research topics.

Research Funding :$3,300,000 as PI,'79-'98, Recent Listed Below

PI: *Chaos Tools for Diagnostic Evaluation of Rotor Machinery and Machine Tools*
EPRI/CAMP, $ 1,100,000, 1996/97/98/99/00
PI: *Rotating Machinery Research,* Ohio Board of Regents(OBR),$ 200,000, 1996-98
PI: *Rotor Dynamic Measurements on Air Hydrodynamic Bearings*
NASA, $75,000 1992/93
PI: *Dynamic Measurements on Oil-Fed Hydrostatic Bearings*
NASA, $ 225,000 1989/90/91/92/93

Publications: *Over 100* publications, several internal corporate research reports and *3* U.S. Patents. New book entitled "*ROTATING MACHINERY VIBRATION-From Analysis To Trouble Shooting*", 354 p., Marcel Dekker, 2001, New York.

Co-Principal Investigator

Jaikrishnan R.Kadambi.Professor
Dept. of Mechanical & Aerospace Engineering
The Case School of Engineering
Case Western Reserve University
Cleveland, OH 44022-7222
Tel (216) 368-6456, Fax (216) 368-6445
E-mail: jxk11@cwru.edu

Education:
B.S.M.E. University of Jodhpur,India,1963
M.S.M.E. University. of Pittsburgh, 1970
Ph.D. University. of Pittsburgh, 1977

Fellow of ASME

Industrial Employment
(1970-1985) WESTINGHOUSE, CORPORATE RESEARCH LABORATORIES (Pittsburgh)
Senior Engineer & PI in the Fluid Dynamics section worked on corporate R & D and EPRI projects for flow related issues in turbomachinery, development of laser based flow diagnostic tools,e.g.laser Doppler Velocimetry and its application to obtain flow field in the intra-blade channels of rotating impeller, flow fields in nuclear reactor steam generators. Developed a steam cascade facility to evaluate losses in the later stages of steam turbines and development of thermodynamic probes for applications in steam turbines.

University Employment
(1985-Present) CASE WESTERN RESERVE UNIVERSITY (Cleveland, OH)
Professor (Tenured 1990, Promoted 1996) Mechanical & Aerospace Engineering Dept.
Graduate and undergraduate teaching, advisor to several PhD & MS students, extensive funded research in the area of turbomachinery, multiphase flow (solid-liquid, solid-gas and liquid-gas flows) related to slurry pumps, flue gas desulphurization techniques, bio-fluid mechanics of cardio-vascular systems, coal pipelines, etc. Laser based flow diagnostic have been developed and improved including particle image velocimetry (PIV). The PIV and laser Doppler velocimetry have been used in these investigations.

Focus oF Current and Recent Research
Dr. Kadambi's expertise is in the area of turbomachinery and he has been a principal investigator on several centrifugal pump experimental fluid mechanics projects, spanning several years. His recent work in this field has been focused on 2-phase centrifugal pump flows and centrifugal slurry pumps flows (e.g., debris and mineral transport)and development of rotdynamic blood pump. Dr. Kadambi's laboratory at CWRU is well equipped with the most up-to-date flow visualization and data reduction capability for particle-laden and two-phase flow pattern reconstruction using PIV.

Research Funding: $2,100,000 as PI,'86-'03, Recent Projects Listed Below.

PI: Flow field measurements in a Rotodynamic blood pump, NASA GRC, $ 160,000, 2000-2004.
PI: Investigation of flow in slurry pumps,$ 200,000, GIW industries, 1999-2003.
PI: Multiphase flows in Geological sequestration of carbon dioxide,$150,000, Ohio Coal Development Office, 2001-03.
PI: Development of Laser Based technique for simultaneous measurement of particle size and velocity,NASA, $ 225,000 1998-01.

Publications: *Over 104* publications, several Westinghouse Reseach Laboratories internal corporate research reports, and a book chapter on **"Transport Processes in FGD" in Dry Scrubbing Technologies for Flue Gas Desulfurization** published by Kluwer Academic Publishers,Boston 1998.

Co-Principal Investigator

Kenneth A. Loparo, Professor
Department of Electrical Engineering & Computer Sc.
The case School Of Engineering
Case Western Reserve University
Cleveland, OH 44106 (216)368-4115, kal4@cwru.edu

Education
B.S.M.E. Cleveland State University, 1972
M.S.M.E. Cleveland State University, 1973
Ph.D. Systems & Control, CWRU, 1977

Academic Experience
1992-Present: Professor
Department of Electrical Engineering and Computer Science, CWRU
Department of Mechanical and Aerospace Engineering, CWRU
Department of Mathematics, CWRU
1994-1997: Associate Dean of Engineering
1990-1994: Chair, Department of Systems and Control Engineering, CWRU
1989-1992: Associate Professor, Department of Mathematics
1983-1992: Associate Professor
Department of Systems Engineering and
Department of Mechanical and Aerospace Engineering, CWRU

Honors and Awards
Elected Fellow of the IEEE, January, 1999
Rockwell' Chairman's Team Award for IQ Pre-Alert Intelligent Motor Product
Wittke Award for Distinguished Undergraduate Teaching, 1995-96
Outstanding Undergraduate Engineering Teaching Award 1991-92 and 1995-96
Tau Beta Pi Outstanding Engineering and Science Professor Award, 1988-1989
Recipient of the Sigma Xi Research Award, 1983
Recipient of the Diekhoff Distinguished Graduate Teaching Award, 1982

Patents
1. United States Patent No. 6053047 (4-00): Determining Faults in Multiple Bearings using One Vibration Sensor
2. United States Patent No. 598080 (11-99): Windup and Noise Protection of Digital Controllers in Layered Control Systems
3. United States Patent No. 5873835 (3-99): Thermal Filter System
4. United States Patent No. 5813993 (9-98): Alertness and Drowsiness Detection and Tracking System
5. United States Patent No. 4959767 (11-90) and European Patent No. 89310577.5 (11-89): Parameter Estimation for Closed Loop Systems
6. European Patent No. 90312628.2 (12-90) and United States Patent No. 5132916 (7-92): Methodology for pH Titration Curve Estimation for Adaptive Control

Publications: Over 100 archival publications.

Research Expertise: Stability and control of nonlinear and stochastic systems with applications to large-scale electric power systems; signal processing and nonlinear filtering with applications to monitoring, fault detection, diagnosis and reconfigurable control; information theory aspects of stochastic and quantized systems with applications to adaptive and dual control and the design of digital control systems; signal processing of physiological signals with applications to clinical monitoring and diagnosis. Some recent research activities have focused on the development of signal processing and data fusion methodologies for the analysis of data from multi-element sensor arrays for diagnostics and prognostics in industrial and medical applications. Dr Loparo has been the P.I or Co. P.I on research funding in excess of $10 million from a variety of government agencies and industrial sources.

Co-Principal Investigator

David Zeng, Associate Professor
Dept. of Civil Engineering
The Case School of Engineering
Case Western Reserve University
Cleveland, OH 44022-7222
Tel (216) 368-2923, Fax (216) 368-5229
E-mail: xxz16@po.cwru.edu

Education
B.S.C.E. Tsinghua University, 1985
M.Phil. Cambridge Univ., 1987
Ph.D. C.E. Cambridge Univ., 1991

University Employment

(2000-Present) CASE WESTERN RESERVE UNIVERSITY (Cleveland, OH)
Associate Professor Civil Engineering Dept.
Graduate and undergraduate teaching, advisor to several PhD & MS students, extensive funded research on soil dynamics, earthquake engineering, sensors, and foundation vibration.

(1994-2000) UNIVERSITY OF Kentucky
Associate and Assistant Professor (Tenured 1999) Department of Civil Engineering. Graduate and undergraduate teaching, advisor to several Ph.D. and MS students, funded research on soil dynamics, earthquake engineering, and foundation vibration.

(1992-1993) UNIVERSITY OF CALIFORNIA, DAVIS
Assistant Research Engineer, Dept. of Civil Engineering, funded research on geotechnical earthquake engineering.

(1990–1992) CAMBRIDGE UNIVERSITY
Research Fellow, Dept. of Engineering, funded research on soil dynamics and earthquake engineering.

Focus oF Current and Recent Research

Vibration attenuation of foundations for high-speed trains, sensors to determine soil properties, response of structures to earthquakes, dynamic soil-structure interaction, new material for constructing vibration reduction foundation, numerical simulation of vibration problems, laboratory simulation of vibration of structures.

Research Funding $1,100,000 as PI and C0-PI,'94-03', Recent Projects Listed Below.
PI: *Application of Rubber Modified Asphalt for Vibration Attenuation of High-Speed Trains,* National Academy of Science, $100,000, 2002-2004.
PI: *International Workshop on Seismic Stability of Tailings Dams,* NSF, $78,000, 2003.
PI: *International Workshop on Earthquake Simulation in Geotechnical Engineering,* NSF, $75,000, 2001.
PI: *Measurement of Soil Properties in a Centrifuge Model During the Flight of A Centrifuge,* NSF, $ 84,000, 2000-2002.

Publications: *Over 90* publications, several research reports and *1* U.S. Patents. Chairman of two NSF International Workshops. Serve on a number of technical committees. Over 50 seminars, keynote lextures and invited presentations. Serve on several review panels for NSF. Review proposals for NSF, USDA. Review papers for several journals and conferences. Visiting professors at two universities.

FLOWSERVE Principal Investigator & Project Principal Consultant

S. "Gopal", Gopalakrishnan
Vice President, Technology
Flowserve Corporation
2300 E. Vernon Avenue
Vernon, CA 90058
Tel (323) 584-1815
E-mail sgopalakrishnan@flowserve.com

Education
B. Tech. Indian institute of Technology, Madras, India, 1964
M.S. Cal Tech. (Aeronautics), 1966
Sc.D. MIT Cambridge, MA, 1969

Industrial Experience:

Flowserve Corporation, Los Angeles, CA, Vice President, Technology (1978-present)
Responsible for the development of technology in areas considered critical to the Pump Division. These technologies are fluid dynamics, mechanical design, mechatronics, materials and analysis techniques.

Provide support to the Sales and Operations functions on key technical issues.

Develop new products. Past product introductions include: an advanced primary coolant pump for nuclear reactors, a long life nuclear seal, a software product for diagnosis of high energy horizontal pumps, an expander for cryogenic services, and seal-less pumps including magnetic bearings and magnetic drives.

Borg-Warner Research Cntr, Chicago, (1973-78) Section Mgr. Turbomachinery Research
Developed a comprehensive method for the aerodynamic design of centrifugal compressors, resulting in the development of an advanced high speed compressor for central water chilling applications.

AVCO Lycoming, Stratford, CT (1969-73) Development Engineer
Designed gas turbine engine Components. Developed a time-marching scheme for the computation of transonic flows with embedded shock waves with applications to turbines and compressors.

Professional Affiliations:

ASME Fluids Engineering Division.
1980 – 1988 Fluid Machinery Committee Executive Positions
2001 - Present Member of Division Executive Committee
Member Sigma Xi, and Orange County Astronomers.
Chairman of the ASME Symposium: "Performance Prediction of Centrifugal Pumps and Compressors", New Orleans, March 1980.
Elected to ASME Fellow, 1995.
Received ASME Fluid Machinery Design Award in 2001.
Delivered Plenary Lecture at the ASME FED Meeting in New Orleans, May 2001.

Publications: Over 50 publications and several Corporate R & D reports (following 4 are representative)
1."A Numerical Technique for the Calculation of Transonic Flow
In Turbomachinery Cascades", ASME Paper 71 GT-42. "Computer Based Hydraulic Design for Pumps", Paper presented at the British Pump Manufacturers Association Meeting, York, England, March 1981.
2. "Critical Speed in Centrifugal Pumps", ASME Paper No. 82-GT-277. Presented in London, England ,April 1982.
3. "Development of a New Small Hydroturbine" (with R. Ferman), ASME Symposium on Small Hydropower Fluid Machinery, 1984.
4. "Interaction Between Impeller and Volute of Pumps at Off-Design Conditions" (with J.A. Lorett), ASME Journal of Fluids Engineering, Volume 1, March 1986.

Patents: Over 10 U.S. patents (following 3 are reprersentative)
1. "Pump Modification for Matching Performance", with J.L. Bearden and J.J. Tuzson, U.S. Patent No. 4,219,917, September 2, 1980.
2. "Two Stage Turbo Compressor" with W.L. Kuivinen, U.S. Patent No. 4,231,702, November 4, 1980.
3. "Pump with Seal Purge Heater" with C. Boster, C. Reimers and G. Vaghasia,

FLOWSERVE Co-Principal Investigator & Project Co-Principal Consultant

Paul Cooper
President, Fluid Machinery Research, Inc.
Flowserve Corporation Consultant
Titusville, NJ 08560

Education
B.S.M.E., Drexel University, 1957
M.S. M.E., MIT, 1959
Ph.D., Case Western Reserve University, 1973

Industrial Experience:

Ingersoll-Dresser Pump, (previously Ingersoll-Rand, now Flowserve Corporation, Los Angeles) (1977-1999)

From 1977 to 1985, Dr. Cooper was a staff researcher on flow and cavitation in commercial pumps at Ingersoll-Rand's Research Center in Princeton, NJ. He measured three-dimensional flow fields in pump passageways; and defined geometries to control impeller sidewall flows that affect hydrodynamic thrust. Assisted by the visualization of cavitating flow, he instituted design improvements that have reduced cavitation damage and extended the life of pipeline and boiler feed pumps. Also, he established guidelines for optimizing the hydraulic design of high-speed pumps, inducers, slurry pumps, and multistage power recovery turbines, and he defined the design changes required for the efficient operation of large pumps running in reverse as low-head hydro-turbines.

In 1986, Ingersoll-Rand's pump research activity was transferred to the company's manufacturing center in Phillipsburg, NJ. Dr. Cooper expanded the R&D facilities and activity in the above areas. In addition, he took on the development of other new products such as seal-less pumps and drip-less mixed-flow vertical pumps. He was then made the director of pump R&D for the company and continued in that responsibility under the title Director, Advanced Technology from the time that the Ingersoll-Rand and Dresser pump operations were combined into the IDP joint venture in 1992. This joint venture added rotary gear and screw pumps to his cognizance, and he then proceeded to define the fluid, thermodynamic and mechanical behavior of two-screw pumps, enabling the company to deploy these machines successfully in multiphase oil field services, where intake volume flow rates are up to 100 percent gas.

In 1999, Dr. Cooper retired from IDP and formed his own consulting company, Fluid Machinery Research, Inc., through which he continues active work in the technology development of pumps and other turbomachinery. He gave the welcoming address to the 17th International Pump Users Symposium in Houston in March 2000, having served since 1984 as a founding member of the Advisory Committee of that symposium. He continues as an emeritus member of this committee. Later in 2000, IDP became a part of the Flowserve Corporation.

TRW, Pump Division, Cleveland, OH (1959-1977)

Paul Cooper spent the first eighteen years of his career (from 1959) as a specialist in the fluid dynamic design of aircraft fuel pumps and down-hole centrifugal pumps for the oil fields. At least a dozen commercial and military aircraft types contain fuel pumps with hydraulic designs for which he was responsible. During this period, he studied both two-phase and two-component gas-liquid flow phenomena and the attendant effect on pump performance. Also, under NASA sponsorship, he a) developed a computer code for analyzing and predicting two-phase-flow inducer performance, including the thermodynamic effects of cavitation, and b) computed the drag of impeller disks via turbulence modeling (part of his Ph.D. thesis).

Professional Affiliations:

Chairman of the Executive Committee of the Fluids Engineering Division of the American Society of Mechanical Engineers (ASME); and he continues his 37 years of association with that Division's Fluid Applications and Systems Technical Committee (formerly the Fluid Machinery Committee,) organizing ASME symposia on pumping machinery. He received the George Stephenson Prize (IMechE) in 1984, the Fluid Machinery Design Award (ASME) in 1991, and the Henry R. Worthington Medal (the ASME award relating specifically to the field of pumps) in 1993. He was made a Fellow of the ASME in 1985.

Publications: Over 50 pump related publications and several internal corporate research reports, spanning 1959 to 2001.

Patents: Ten (10) pump related patents, spanning 1966 to 1993

APPENDIX-A:

Research Methodology, Facilities and Related Research

Research Methodology

As stated earlier, the mission of this project is to develop and successfully demonstrate model-based observers for *Condition Monitoring and Prognostics* (CMAP) of safety related motor-pump systems. To attain these objectives we will develop a fully instrumented pump flow loop with an optically clear pump in collaboration with Flowserve. This pump loop will be used to simulate the critical operating conditions that are encountered in nuclear power plants in a laboratory test environment. The pump casing and the impeller will be made of optically clear material to facilitate characterizing the flow conditions in the pump using non-intrusive optical laser-based particle image velocimetry (PIV). The pump loop will simulate the different operating conditions, e.g. ingestion of foreign material, inception of cavitation, off-design operating conditions, various distress conditions and faults, that can be encountered during pump operation. It will be thoroughly instrumented to obtain the pump flow field, the operating parameters of the motor, the vibration signals from the motor, the pump and the foundation. The ability to introduce motor, pump and foundation faults will be included in the pump loop test system. This will allow the research team to develop and calibrate physics-based models of the system by correlating measured signals obtained from the probes on the motor, pump body, and foundation with the operating characteristics of the system.

The vibration of a motor-pump system, its supporting structures, and the foundation can be expressed by the equations of motion written in matrix format as:

$$[M]\{d^2x/dt^2\} + [C]\{dx/dt\} + [K]\{x\} = \{F(t)\}$$

where $[M]$ = mass matrix
$[C]$ = damping coefficient matrix
$[K]$ = stiffness matrix
$\{x\}$ = displacement matrix
$F(t)$ = external force matrix

For the pump system to be studied in this project, the vibration is the result of complex fluid-structure-foundation interaction. The recent developments in advanced finite element simulation have made it possible to solve vibration problems numerically using well established numerical codes such as ABAQUS.

When a pump is running smoothly, a steady state solution to the vibration equation can be obtained. If the vibration of the pump and its foundation are monitored, the recorded displacements or accelerations should show patterns of a smooth vibration. However, if an irregular situation occurs, an imbalance caused by an internal fault of the pump, injection of a foreign object, a sudden change of flow conditions would result in a change in the parameters of the matrices $[M]$, $[C]$ or $[K]$ and/or the forcing function $\{F(t)\}$.

Nonlinear state-dependent behaviors of the system are included in **{F(t)}**. In addition, a foundation fault (such as deterioration of the foundation materials, loosening of connections, cracks in the foundation, etc.) would also potentially be indicative of changes in these matrices. Any one of the above mentioned changes would have a corresponding change in the vibration behavior (measured signals) of the system, and this change can be detected by monitoring the vibration of the pump and foundation system. In fact, each type of defect would have a signature in the recorded vibration trace, and this information along with the pump-foundation model which can be used effectively to detect that a fault has occurred. And furthermore, it can be used to diagnose (or isolate) the type, severity and potential root cause of the fault, and develop scenarios of future operation and evaluate the remaining useful life of the system.

The research team has had considerable experience in the development of advanced real-time techniques for fault detection, diagnosis and prognosis of rotating machine systems. Our past work has focused on the development of both model-based and signal processing techniques for motor and rotating machinery faults including unbalance, misalignment, stator and rotor bar faults, bearing and gear faults, operating system problems such as rub impact, oil whip, oil whirl and resonances. This work has included mathematical modeling, algorithm development, as well as extensive laboratory testing and evaluation. An important strength of this research team is the combination of conceptual and practical industrial experience.

The research group has in recent years developed statistical model-based monitoring diagnostic software that incorporates an array of machine-specific vibration models, specific to an extensive array of operating modes as well as fault types and severity levels. Monitoring, fault detection and diagnosis are accomplished by real-time statistical analysis of the relative ability of fault specific observer models to track the actual machine's monitored vibration signals. The basic idea behind the approach is to use physically-based models of rotating equipment and fault modes to develop real-time monitoring, diagnosis and prognosis methods and algorithms for rotating machinery. The models are developed to capture the dynamic behavior of the machine during both normal and faulted operation and the fault detection system developed using these models is capable of operating effectively in noisy-signal measurement environments.

A pump loop facility (designed in consultation with FlowServe) will be a scaled version of the full-scale pump loop that will be used to simulate the conditions encountered in nuclear power plant operation. The prime mover for driving the flow in the loop will be specially designed to provide optical access. The casing of the pump and the impeller will be made from optically transparent material with easily interchangeable parts to allow for testing the different pump impeller/casing design combinations for the different nuclear plant pump services. The test pump will have a transparent casing and impeller parts. The matching of the refractive indices of the pump casing and impeller, and the liquid (sodium iodide solution) will allow the use of particle image velocimetry (PIV) to obtain the fluid velocities in the impeller as well as the casing. Thus the flow loop can be fully characterized. Control of the timing of the PIV laser firing as a function of impeller blade position can be provided by a combination of an optical encoder placed close to the shaft

of the pump and a reflective surface marker on the shaft and aligned with one of the blades of the impeller. Proper pressure, temperature and flow rate measuring instrumentation will also be employed. Professor J.R. Kadambi has substantial experience in characterizing flows in pumps using the PIV system and refractive index matching technique [1-5]. The optically clear centrifugal slurry pump and the flow loop with PIV set up used in references [1,2, and5] are shown here in Figures 5 and 6.

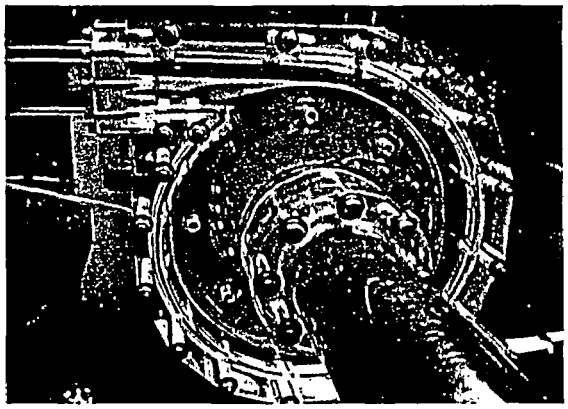

Figure 5. Centrifugal slurry pump with clear casing and clear impeller.

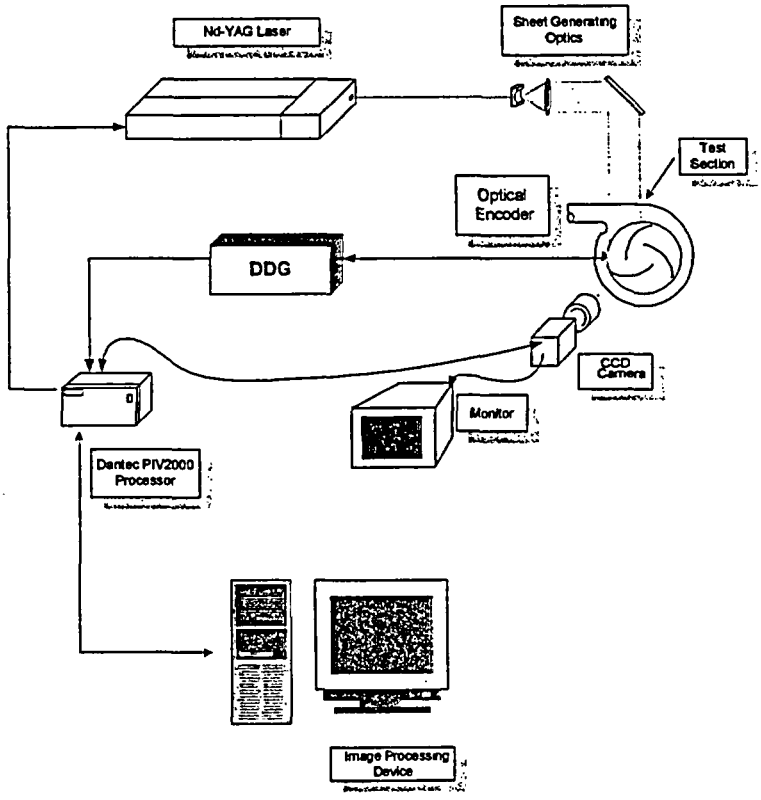

Figure 6. The PIV setup

The pump loop will include a variety of instrumentation to monitor voltages and currents in the prime mover, as well as proximity probes for measuring the orbit

dynamics and accelerometers strategically placed at various locations on the motor pump-foundation system. Data will be digitized and collected through a high-speed data acquisition card and stored on a hard disk for subsequent processing.

In order to use model-based and signal processing technique to detect possible faults of a motor-pump foundation system, the following research tasks are required.

1) Develop physics-based models of the system that incorporate both normal and faulted behavior. The models will be transformed to nonlinear fault observers, i.e. real-time dynamic systems driven by the monitored signals from the system. Computational models as well as numerical simulation procedures will also be developed. All of these models will capture the vibration and other monitored responses of a complex motor-fluid-pump-foundation system. A few strategically important points will be selected for vibration monitoring.

2) Calibrate and validate the various models using well-designed laboratory tests for normal and faulted operation of the system. Validation will include comparing the results of numerical simulation with data recorded by sensors installed in the lab setup.

3) Verify the models and fault filters numerical using field tests to be conducted on full size pumps under actual operating conditions.

4) Incorporate the monitoring and diagnostic algorithms into a real-time CMAP system. The system will be tested in field tests over a range of operating conditions and faults. A successful CMAP system should be able to determine to detect and diagnose abnormal operating behavior, determine what is the likely cause of the fault when an irregular behavior is recorded, and using future operating system scenarios, estimate the remaining useful life o the system.

Existing Facilities

Facilities in the Department of Mechanical and Aerospace Engineering at Case Western reserve university include the Rotor

Dynamics Laboratory and the Laser Flow Diagnostics Laboratory. The Rotor Dynamics Laboratory includes several test rigs. The first system, shown schematically in Figure 1, is a dual spindle test rig. This test rig allows for separately controlled rotation and orbit speeds and the test chamber (shown in Figure 2) can be sealed to facilitate testing in various controlled environments. Another test rig available in the laboratory is a flexible rotor test rig that can incorporate simultaneous multiple-faults, includes a system for the real-time control of two planes of rotor unbalance at two disks, can operate in a rub-induced impact mode between rotor and stator, can accommodate radial static offset between rotor and stator, and can operate at speeds of up to 10,000-rpm traversing two critical speeds of the test rig . The test rig also includes a fluid film journal bearing at mid span and a load cell device to apply a controlled static load to the bearing. A schematic diagram of this experimental apparatus is shown in Figure 3 and photograph is shown in Figure 4.

Legends:

1. Journal
2. Inner Spindle Rotor
3. Outer spindle Rotor
4. Spindle Housing
5. Support Base
6. V-belt Outer Pulley
7. V-belt Inner Pulley

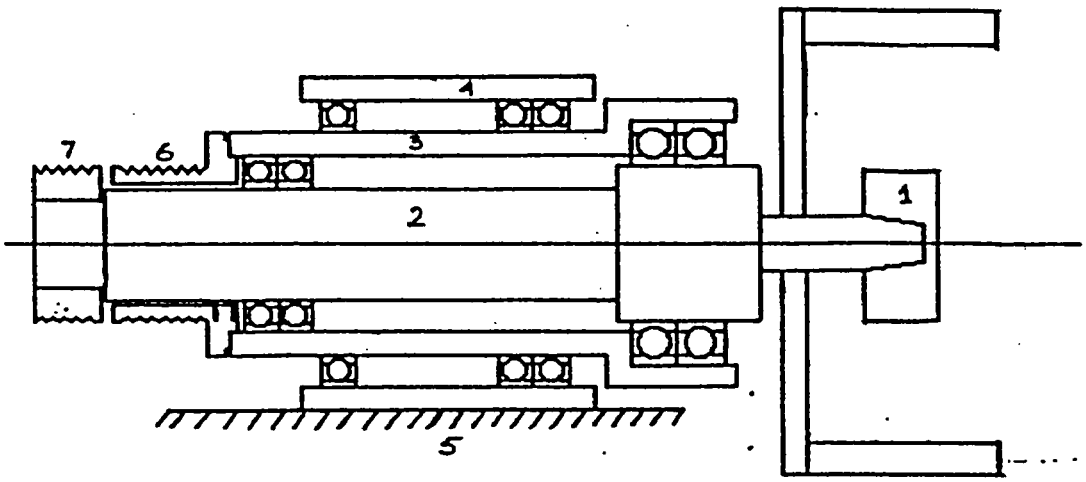

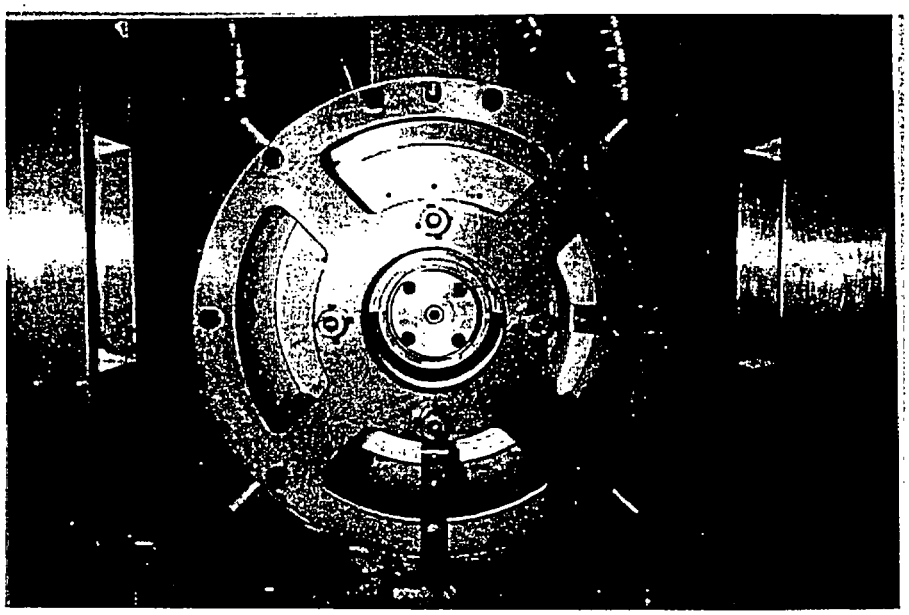

Figure 2: Test Chamber of the Dual Spindle Test Rig

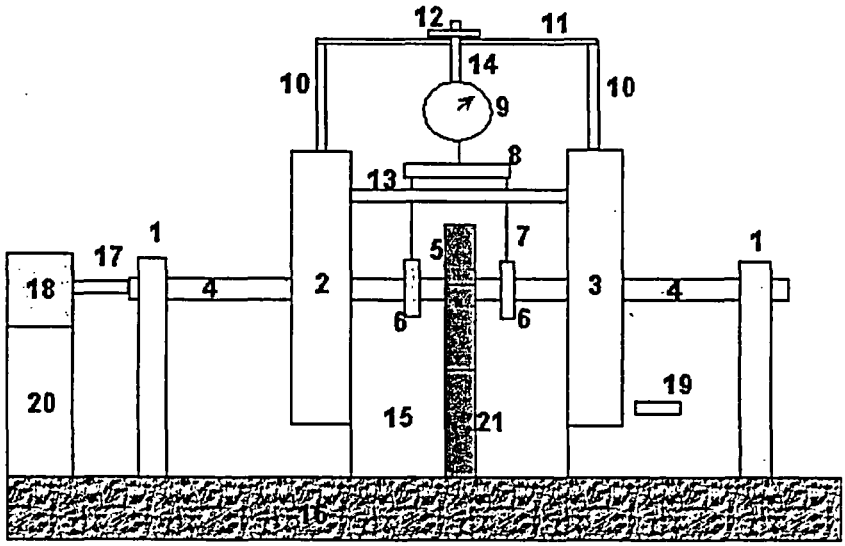

1- End Bearing
2- Drive End Balancer
3- Out Board Balancer
4- Shaft
5- Journal Bearing
6- Load Support
7-Rods
8- Beams
9- Load Measurement Device
19- Key Phasor
21- Aluminum Base

10- Columns
11- Beam
12- Knob
13- Lid
14- Threaded Rod
15- Oil Tank
16- Table Support
17- Quill Shaft
18- DC Motor
20- Motor Support Base

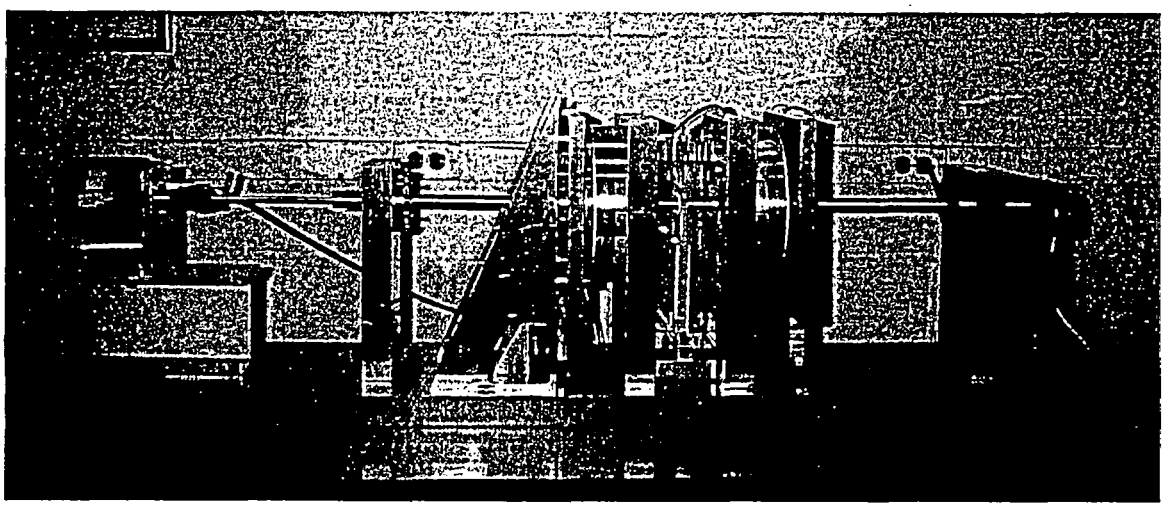

Figure 4: Photograph of the Flexible Test Rig

The facilities and major equipment available in the Laser Flow Diagnostics Laboratory is described next. A brief description of the facilities and major equipment follows:

(1) The refractive index matched centrifugal slurry flow loop: This loop consists of a centrifugal pump with optically clear casing and impeller, clear 2 inch piping and instrumentation. The pump is a scaled model of large slurry pumps used in the mining industry. The flow of solid-liquid slurry through the impeller and impeller casing are studied using laser based particle image velocimetry (PIV). The slurry is made up of sodium iodide solution and 0.5 mm clear glass beads. The matching of the refractive indices of the pump casing and impeller, the glass beads and the liquid (sodium iodide solution) allows the use of PIV to obtain the fluid and particle velocities in the impeller as well as the casing. Thus the flow loop can be fully characterized. The loop was designed and developed by GIW Industries, Grovetown, Ga. The technique developed for this flow loop has also been utilized for the rotodynamic blood pump flow characterization.

(2) The rotodynamic blood pump loop: This loop consists of a clear casing 1.0 inch rotodynamic blood pump. The pump was manufactured in the CAD-CAM manufacturing laboratory in the Mechanical and Aerospace Engineering Department at CWRU. Sodium iodide based blood analog fluid is used in this facility. Flow through the impeller and casing are studied using PIV.

(3) A pulsatile blood flow facility: This facility simulates the flow of blood through coronary artery stent using blood analog fluid (BAF). The BAF is made up of sodium iodide solution, glycerine etc: The facility can simulate cardiac flow conditions of a person at rest and at normal stress levels. The refractive index of the coronary stent section are matched with BAF which facilitates the use of optical laser based instrumentation for flow field measurements. Micro-PIV, used for analyzing the flow field through the 3.0 mm diameter stent ,is capable of investigating field of views as small as 1.5 mm by 1.5 mm.

(4) Sorbent injection facility: Techniques for injecting sorbents for removal of toxics e.g. mercury, from flue gases are being developed in this facility. PIV and LDA are the instruments used in investigating the interaction of particle laden jet issuing out of nozzle with the concurrent flow.

In addition to these facilities the CWRU CAD- CAM machine shop facilities are also available.

The laboratory is equipped with two PIV systems, and an LDA system.

(1) Micro-PIV system based upon PIVPROC software. This in an indigenously developed system, which utilizes the software PIVPROC, developed by Dr. M.Wernet of NASA GRC. It consists of a New Wave Nd:YAG 120 mJ/pulse laser, a Roper 10 bit ES1.0 CCD 1018x 1018 pixel cross-correlation camera, Traverse table for laser and laser sheet optics, PC equipped with EPIX PIXCI board data acquisition, and a microscope objective lens. The micro-PIV system has been

successfully used to investigate flows in 150 micron wide flow channels. Fields of view of 1.5 by 1.5 mm have been obtained.

(2) PIV system consisting of a New Wave Nd:YAG 50 mJ/pulse laser, two CCD (Dantec) 768x484 pixel cross-correlation cameras, A Kodak megaplus 1.4i auto-correlation Camera, Dantec PIV 2000 Processor, Traverse table for laser and laser sheet optics, PC for data acquisition and PIV software.

(3) Dantec Phase Doppler Analyzer/LDA, 5 watt Argon-ion laser, and a traverse table. This unit can be operated in the traditional laser Doppler Anemometer mode to obtain local pointwise flow velocities in two dimensions in addition to the PDA mode where it can be used for obtaining the particle/droplet size as well as velocities..

Additional facilities in the Department of Civil Engineering at CWRU has a shaker table that has been used since 1996 to study dynamic soil-structure interaction. The shaker table can apply a wide range of dynamic loading on structures (such as a pump) to determine dynamic response of the structure. Data from such testing can be used to calibrate and verify physics-based models. A wide range of sensors are available for vibration monitoring including accelerometers and LVDTs.

The computer code ABAQUS is available in-house and can be used for numerical simulation as already installed on workstations in the department. The code has been recently used to study vibration problems in earthquake engineering and high-speed trains.

Currently Dr. Zeng and his research group have a project funded by the National Academy of Sciences to study the vibration generated by high-speed trains. Part of the project is to develop numerical simulations of the interaction between a high-speed train, track, trackbeds, and the foundation using the ABAQUS program. The procedure used in this work is similar to the techniques that will be used in the scope of work described in this proposal. The experience we have had in this project shows that ABAQUS can handle the type of complex fluid-structure-foundation interaction problems pertinent to nuclear power plant pumps.

In addition, Dr. Zeng has a project funded by the National Science Foundation in geotechnical earthquake engineering, which includes the use of the shaker table to study the dynamic response of soils. Data generated from such tests have been used to verify numerical procedures for earthquake simulations.

Related Prior Work (References for Appendix-A)

1. K. Mahiwan, A.Subramanian, J.Kadambi et al, "PIV Investigations of Flow in a Centrifugal Slurry Pump", 9th International Symposium on Flow Visualization, Edinburgh,Scotland, September 22-26,2000.

2. Charoenngam,P., Kadambi, J.R., Subramanian,A, and Addie,G., "Investigation of Slurry Flow in a Centrifugal Pump Using PIV", 4th International Conference on Multiphase Flow (ICMF-2001), New Orleans, La.,May,2001.`

3. J.R. Kadambi, P.Charoenngam, A. Subramanian, M.P.Wernet, J. Sankovic and G. Addie, "PIV Investigations of Particle Velocities in the Tongue Region of a Slurry Pump," Erosion Symposium, ASME Fluids Engineering Division Summer Meeting, Montreal, Canada, July,2002. (accepted for ASME Journal of Energy Resources Technology).

4. J. M. Sankovic, M. Mehta, J.R. Kadambi, M. Wernet and W. A. Smith, "Investigations of the Flow Field in a Rotary Blood Pump Using PIV", Liquid-Solid Flows Symposium, Joint ASME- JSME Conference, Hawaii, July,2003. (accepted for ASME Journal of Fluids Engineering).

5. J.R. Kadambi , P. Charoenngam, M. Mehta, J. Sankovic and G. Addie, "Particle-Fluid Interactions in the Intra-blade Passages of a Slurry Pump", Liquid-Solid Flows Symposium, Joint ASME-JSME Conference, Hawaii, July,2003.

6. T. Wolbank, K.A. Loparo and R. Wohrnschimmel, "Inverter Statistics for Online Detection of Stator Asymmetries in Inverter Fed Machines," IEEE Transactions on Industry Applications, Vol. 39, Number 4, July/August 2003, pp. 1102-1109

7. C.H~Oppenheimer and K.A. Loparo, "Physically Based Diagnosis and Prognosis of Cracked Rotor Shafts", Proceedings of the SPIE AeroSense Confeence, April 2002

8. F.M. Discenzo, P.J. Unsworth, K.A. Loparo and H.O. Marcy, "Intelligent Motor Provides Enhanced Diagnostics and Control for Next Generation Manufacturing Systems," Computing and Control Engineering Journal, Vol. 11, October 2000 pp.~228-234.

9. K.A. Loparo, M.L. Adams, W.. Lin, M. Abdel-Magied, and N. Afshari, "Fault Detection and Diagnosis of Rotating Machinery," IEEE Trans. on Industrial Electronics, Vol. 47, No. 5, October 2000 pp. 1005-1015.

10. H. Ocak and K.A. Loparo, "A New Bearing Fault Detection and Diagnosis Scheme based on Hidden Markov Modeling of Vibration Signals", Proceedings of the 2001 IEEE International Conference on Acoustics, Speech and Signal Processing, May 2001.

11. F. Discenzo, D. Chung and A. Twarowski and K.A. Loparo, "Intelligent Sensor Nodes Enable a New Generation of Machinery Diagnostics and Prognostics", Proceedings of the Machinery Failure and Prediction Technology Conference}, April 2001

12. K.A. Loparo and M.L. Adams, "Development of Machinery Monitoring and Diagnostic Methods Based on Nonlinear Vibration Characteristics", Proceedings of the 52nd Machinery Failure Prevention Technology Conference, March 30-April 3, 1998.

13. N. Afashri and K.A. Loparo, "A Model-Based Technique for the Fault Detection of Rolling Element Bearings using Detection Filter Design and Sliding Mode Technique", Proceedings of the IEEE Conference on Decision and Control, December, 1998.

14. G. Horratas, M.L. Adams and K.A. Loparo, Experimental Investigation of Dynamic Nonlinearites in Rotating Machinery", Proceedings of the 1997 DETC, September 14-17, 1997.

15. M. Abdel-Magied, G. Horratas K.A. Loparo and M.L. Adams, "Fault Detection of Rotating Machinery using Model-Based Techniques", Proceedings of the Industrial Electronics Conference (IECON'97)}, November 10-14, 1997.

16. Y.~Maki and K.A.~Loparo, "A Neural Network Approach to Fault Detection and Diagnosis in Industrial Processes," IEEE Transactions on Control Systems Technology, Vol. 5, No. 6,November, 1997.

17. Wang, J. and Zeng, X. "Simulation of Vibration Attenuation of High-Speed Railway with Different Trackbed Materials," Journal of Vibration and Control, 2003.

18. Itoh, K., Zeng, X., Murata, O. & Kusakabe, O., "Centrifugal Simulation of Vibration Reduction Generated by High-Speed Trains Using Rubber-Modified Asphalt Foundation and EPS Barrier," International Journal of Physical Modelling in Geotechnics, Vol.3, No.2, 1-10, 2003.

19. Zeng, X., Rose, J.G., and Rice, J.S. "Stiffness and Damping of Crumb Rubber Asphalt Mixes: Potential Vibration Attenuation for High-Speed Railway Trackbeds," Journal of Vibration and Control, Volume 7, No. 4, 527-538, 2001.

20. Zeng, X. "Modeling the Stability of Sand Foundations during Earthquakes, Transportation Research Report, No.1504, 22-33, 1995.

APPENDIX-B:

Main Body Of White Paper by M. L. Adams, Spring 2003

1. Descriptions of Major Critical Pumps and Operating Conditions

Most of the critical pumps are of the centrifugal pump type. One exception is the primary loop charging pump, which employs both centrifugal and piston pump types. The focus of this research initiative is therefore on centrifugal pump types.

1.1 Reactor coolant pumps (RCP) and reactor recirculation pumps (RRP)

The RCPs (PWR) continually remove the heat generated in the reactor and transport it to the steam generator. The RRPs (BWR) recirculate the water within the reactor vessel and thus are critical to reliable and safe operation of the plant. Figure 1 shows a typical shaft sealed RCP. Units of different vendors differ somewhat in internal hydraulic features, bearing and primary shaft seal details. But all RCPs and RRPs are of vertical centerline construction with the pump at the bottom and the drive motor on top. Each flow leg of a PWR's primary loop has a steam generator in series with an RCP to provide continuous circulation between the reactor and steam generator. Steam is produced in the secondary loop to drive the main steam turbine-generator. Each of the two BWR recirculation loops has a RRP to circulate the water through the reactor vessel to control temperature and power output.

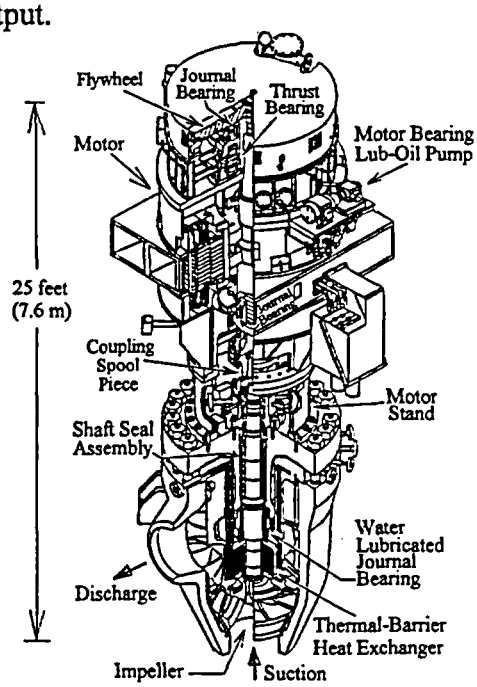

Figure 1. RCP of 100,000 gpm capacity and speed of 1,200 rpm; typical PWR primary loop conditions are 2, 250 psi (153 bars), 550°F (Adams, 2001).

That RCPs and RRPs are vertical is dictated by the piping layout constraints of typical PWR and BWR primary flow loops. Concerning rotor-bearing mechanics, vertical machines are fundamentally more difficult to analyze and understand than horizontal machines, primarily because the radial bearing loads are not dead-weight biased, the rotor

weight being carried by the axial thrust bearing. Radial bearing static loads in vertical machines are therefore significantly less well defined and more non-stationary than bearing static loads in horizontal machines. Given the strong dependence of journal bearing rotor dynamic characteristics on bearing static load, the rotor vibration characteristics of these vertical-rotor machines are typically quite uncertain and randomly variable, far more so than horizontal machines.

The motor and pump shafts are rigidly coupled, which enables the entire coupled-rotor weight plus axial pump hydraulic thrust to be supported by one double-acting tilting-pad thrust bearing. This is the standard arrangement supplied by U.S. RCP manufacturers. A major European manufacturer employs a flexible coupling, necessitating two thrust bearings, one for the pump and one for the motor. In the Figure 1 configuration, a large flywheel mounted at the top of the rotor is approximately 6 feet (1.8 m) in diameter and 15 inches (0.38 m) thick. It provides a relatively longer coast-down time to insure uninterrupted reactor coolant water flow during the transition to emergency backup power during a brief pump motor electric power interruption. The spool piece in the rigid coupling allows inspection and repair of the pump shaft seals without having to lift the motor. The pump impeller outside diameter is approximately 38 inches (0.97 m). The rigidly coupled rotor shown in Figure 1 is held by three journal bearings, two quite narrow oil lubricated tilting-pad journal bearings in the motor and one water lubricated graphite-composition sleeve bearing located just above the thermal barrier. The water lubricated bearing operates at primary loop pressure (approximately 2,250 psi, 153 bars) and thus this hydrodynamic bearing runs free of film rupture (cavitation). The attitude angle between the static load and the journal-to-bearing radial line-of-centers is therefore 90° over the full range of operation. As a consequence, such RCPs usually exhibit a *half-frequency whirl* (i.e., half rotational speed) component in the rotor vibration signals. More detailed information on this pump and similar designs of different manufacturers is given in the Oak Ridge National Laboratory report of Makay et al. (1972). There are several aspects of currently operating RCPs that strongly invite the application of more modern technology advancements to increase safety margins on these critical safety related pumps.

1.2 Main feed water pumps (FWP)

The steam generator of a PWR system and BWR reactor vessel are the counterparts of the boiler in a fossil fired power plant. Thus the feed water pumps pressurize the water in the PWR secondary loop and BWR vessel, fulfilling the same function as a boiler feed water pump in a fossil fired plant. While the RCPs and RRPs continually transport the heat generated in the reactor, the FWPs continually provide the necessary pressurization and water flow for high pressure super heated steam production. . The FWPs are thus critical to plant production and safe operation since they induce the transport of heat away from the steam generator in the form of superheated steam to power the main turbine-generator.

FWPs for PWRs are typically single-stage double-suction centrifugal pumps as shown in Figure 2. These pumps required extensive internal hydraulic passage modifications after histories of high-vibration problems (Makay & Barrett, 1984). Recently, such pumps

were diagnosed with shaft sleeve differential thermal expansion caused shaft bowing and attendant excessive vibration that necessitated a design retrofit (Adams & Gates, 2002).

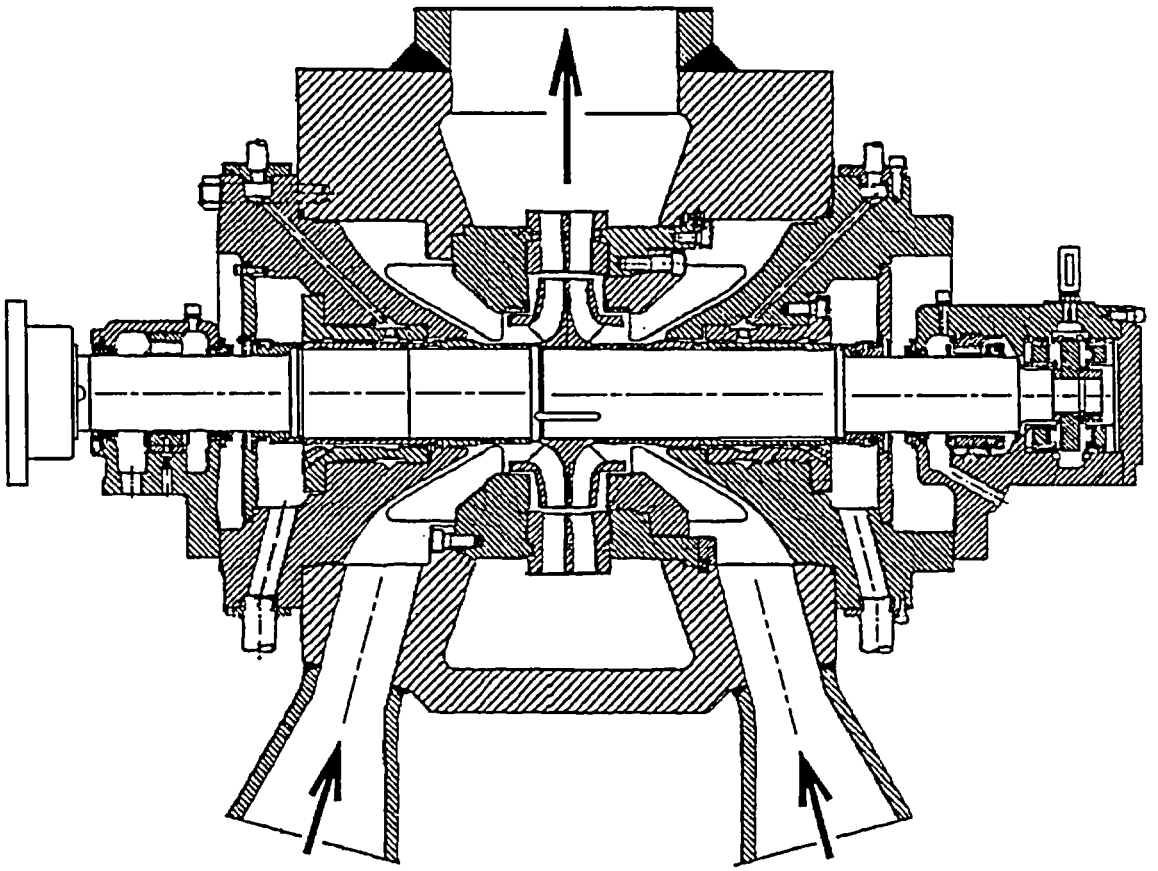

Figure 2. PWR nuclear feed water pump; 8000 HP, 5100 RPM.

1.3 Auxiliary feed water pumps (AUXFP)

The function of these pumps is to supply feed water to the steam generators under plant startup, normal shut down, hot standby, and emergency conditions. They are normally in a standby non-running state, but must be able to deliver their full rated head and flow within 20 seconds after actuation. In their safety related capacity, these pumps must provide feed water to the steam generator in the event the main feed water pumps cease to properly function during plant operation. Since these pumps are usually not being operated most of the time, assessment of wear and aging becomes an elusive albeit important consideration as plants continue to age in service (Adams & Makay, 1986). The design of these pumps is primarily that of older and smaller boiler feed pumps for earlier generation fossil fired power plants. Thus these pumps are typically multi-stage centrifugal pumps. Figure 3 shows some typical AUXFP configurations.

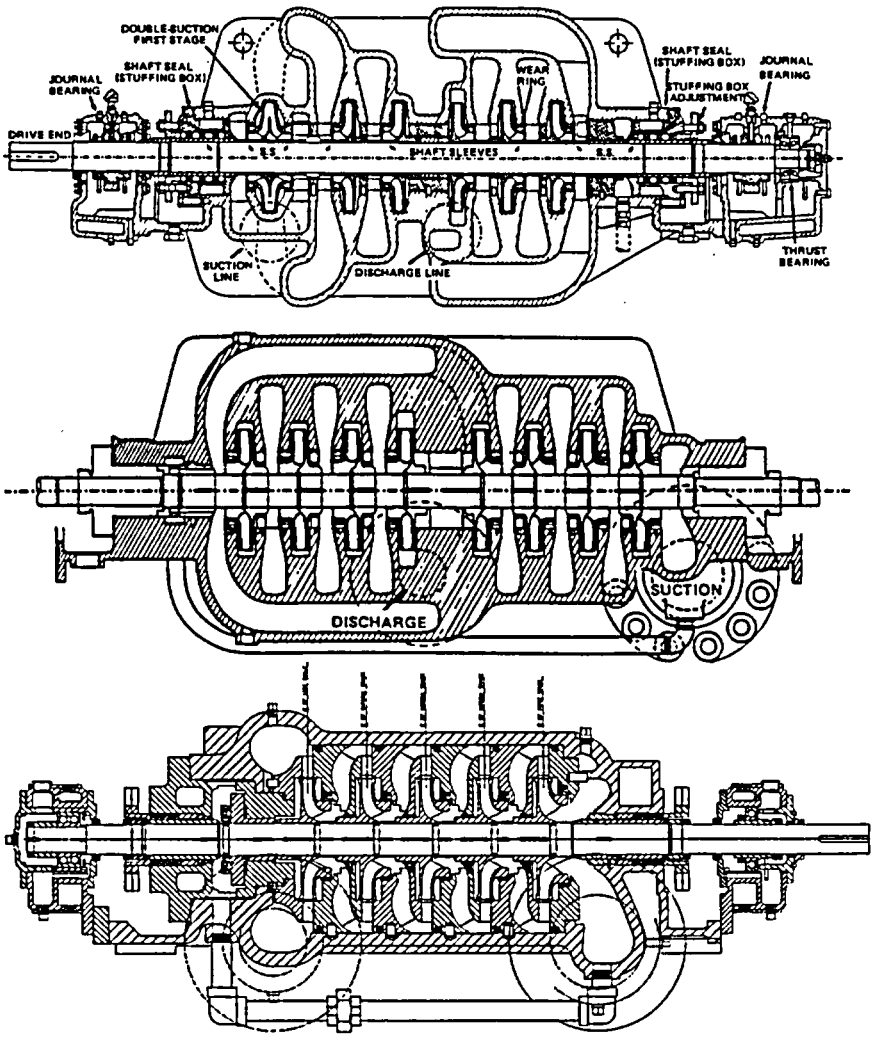

Double-Suction Opposed Impellers

Single-Suction Opposed Impellers

Single-Suction In-Line Impellers

Figure 3. Three typical AUXFP configurations (Adams & Makay, 1986).

1.4 High Pressure Safety injection pumps (HPSI)

In the event of a major loss of coolant leak (LOCA condition) the safety injection pumps are engaged to provide the injection of high pressure water into the reactor primary loop. Clearly, the HPSI pumps are critical safety related pumps, serving to maintain primary loop pressure by injecting the necessary flow rate to maintain primary loop pressure during and emergency shutdown following a LOCA event. Figure 4 shows a typical HPSI pump.

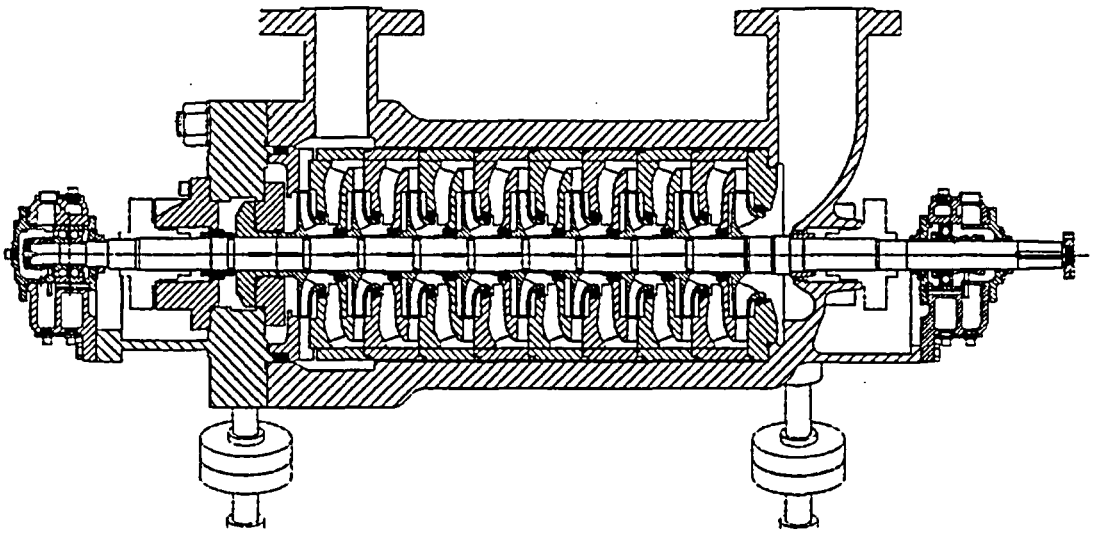

Figure 4. High pressure safety injection pump.

1.5 Charging pumps

These pumps may be either of the multi-stage centrifugal type or a positive displacement type (e.g., piston pump). The centrifugal type is the focus here. Charging pumps service is to maintain PWR primary loop pressure (approximately 2500 psi). Due to "breathing of the primary loop and small leaks, it is necessary to have charging pumps on line to pump make-up water into the primary loop to maintain the controlled primary loop pressure. A typical centrifual pump configuration is shown in Figure 5.

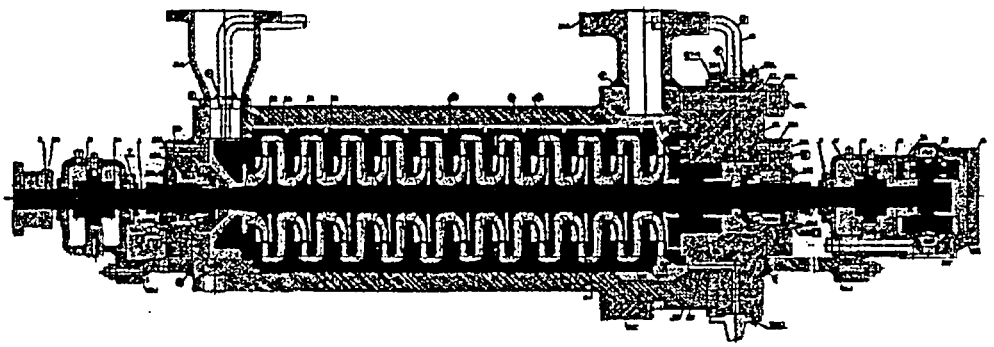

Figure 5. PWR primary loop charging pump

1.6 Residual heat removal pumps

These pumps are also called Low Pressure Safety Injection or Decay Heat pumps. Their normal non-emergency use is to remove decay heat generated in the reactor even after the control rods are fully inserted to shut down the reactor. Atypical RHR pump configuration is shown in Figure 6.

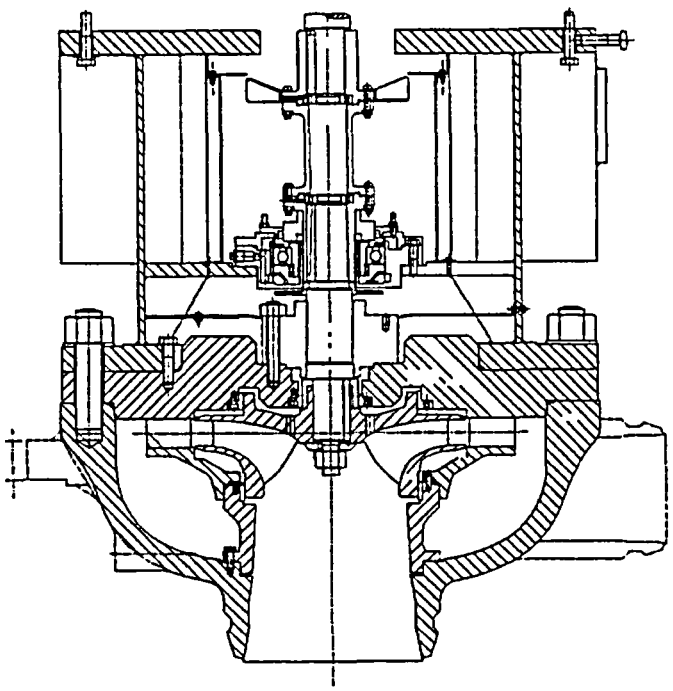

Figure 6. Residual heat removal pump/low-pressure safety injection pump.

1. Stressor Descriptions and Influences

Stressor Descriptions

2.1 Mechanical stressors

- Static loads, e.g., piping forces
- Dynamic loads, i.e., material fatigue
- Transmitted torque
- Misalignments
- Internal pressure containment
- Assembly and Fastener loads
- Vibration (steady state, transient, e.g. seismic event)

2.2 Hydraulic stressors

- Cavitation: damage to exposed surfaces
- Unsteady flow: high intensity pressure pulsation, especially at low flow
- Fluid impingement
- Flow asymmetries from inlet flow distortion, e.g., upstream elbows
- Flow non-uniformity, e.g., impeller manufacturing (casting) inaccuracies

2.3 Tribological stressors

- Lubricant anomalies, e.g., foaming, fire, interruption of lubricant supply
- Friction and wear, particularly at points without lubrication
- Dirt in lubricant
- Erosion in fluid film bearings, both hydrodynamic and hydrostatic types
- Rubbing wear (abrasion, erosion, adhesive wear) and galling
- Surface oxide abrasives

- Fretting
- Lubricant breakdown
- Starts and stops

2.4 Chemical stressors

- General types of corrosion
- Interactions of pump parts to contact with liquids, gases and other parts
- Pump component material aging

2.5 Seismic stressors

- Sub-strait and pump support structure dynamic characteristics
- Inadequate vibration damping capacity of pump mounting & components

Stressor Influences (see pump component summary list in Section 2.23)

2.6 Shaft

- Mechanical stressors: transmitted torque, fastener loads, rotor-dynamic loads
- Hydraulic stressors: steady and unsteady steady flow forces
- Tribological stressors: rubbing between rotating and non-rotating parts, bearing lubricant breakdown, dirt in lubricant, starts and stops, surface oxide abrasives, cyclic stress from shaft rotation under fixed bending forces

2.7 Impellers

- Mechanical stressors: transmitted torque, fastener loads, rotor-dynamic loads
- Hydraulic stressors: unsteady flow forces, cavitation, fluid impingement
- Tribological stressors: rubbing between rotating and non-rotating parts, starts and stops, surface oxide abrasives, fretting

2.8 Shaft spacers sleeves

- Mechanical stressors: fastener loads, rotor-dynamic loads
- Hydraulic stressors: Unsteady flow forces
- Tribological stressors: rubbing between rotating and non-rotating parts, surface oxide abrasives, fretting

2.9 Thrust runner

- Mechanical stressors: fastener loads, rotor-dynamic loads
- Hydraulic stressors: steady and unsteady flow forces
- Tribological stressors: rubbing between rotating and non-rotating parts, bearing lubricant breakdown, dirt in lubricant, starts and stops, fretting, surface oxide abrasives

2.10 Fasteners

- Mechanical stressors: transmitted torque, assembly loads, rotor-dynamic loads
- Hydraulic stressors: steady and unsteady flow forces
- Tribological stressors: fretting

2.11 Diffusers or volutes

- Mechanical stressors: fastener loads
- Hydraulic stressors: steady and unsteady flow forces, fluid impingement, cavitation,
- Tribological stressors: fretting

2.12 Return channels

- Mechanical stressors: fastener loads

- Hydraulic stressors: steady and unsteady flow forces, fluid impingement
- Tribological stressors: fretting

2.13 Wear surfaces (i.e., sealing flow boundaries, e.g., wear rings)
- Mechanical stressors: assembly loads, rotor-dynamic loads
- Hydraulic stressors: fluid impingement
- Tribological stressors: rubbing between rotating and non-rotating parts, starts and stops, surface oxide abrasives

2.14 Fasteners
- Mechanical stressors: assembly loads, vibration
- Hydraulic stressors: steady and unsteady flow forces
- Tribological stressors: fretting

2.15 Upper and lower casing parts
- Mechanical stressors: assembly loads, piping forces, seismic loads, vibration
- Hydraulic stressors: steady and unsteady flow forces, fluid impingement, internal pressure

2.16 Suction and discharge nozzles
- Mechanical stressors: assembly loads, vibration
- Hydraulic stressors: steady and unsteady flow forces

2.17 Thrust bearing
- Mechanical stressors: assembly loads, vibration
- Hydraulic stressors: steady and unsteady flow forces
- Tribological stressors: surface fatigue

2.18 Radial bearings
- Mechanical stressors: assembly loads, rotor-dynamic loads
- Hydraulic stressors: steady and unsteady flow forces
- Tribological stressors: surface fatigue, rubbing between rotating and non-rotating parts, bearing lubricant breakdown, dirt in lubricant, starts and stops

2.19 Thrust balancer
- Mechanical stressors: assembly loads,vibration
- Hydraulic stressors: steady and unsteady flow forces
- Tribological stressors: surface fatigue, rubbing between rotating and non-rotating parts, bearing lubricant breakdown, starts and stops, surface oxide abrasives

2.20 Shaft seals
- Mechanical stressors: assembly loads, vibration, improper adjustment (over tightening) to adjust for normal wear of packing
- Hydraulic stressors: internal pressure
- Tribological stressors: rubbing between rotating and non-rotating parts, starts and stops, surface oxide abrasives, galling

2.21 Coupling
- Mechanical stressors: transmitted torque, assembly loads, rotor-dynamic loads, excessive misalignment, rotor torsional vibration
- Tribological stressors: lubricant breakdown/loss/dirt (gear coupling), surface fatigue, fretting

2.22 Base frame

- Mechanical stressors: assembly loads, vibration, seismic loads, piping forces
- Hydraulic stressors: steady and unsteady flow forces

2.23 Pump component summary list

Pump Segment	Parts
Rotating elements	shaft, impellers, miscellaneous spacers thrust runners, fasteners
Non-rotating internals	diffusers or volutes, return channels, wear surfaces, fasteners
Pressure-containment casing	upper casing, lower casing, fasteners, suction and discharge nozzles
Mechanical subsystems	thrust bearing, radial bearings, shaft seals, wear rings thrust balancer, coupling, fasteners,
Support	base frame, fasteners

3. Failure Modes and Failure Causes

3.1 Failure to operate

- Loss of driver function, e.g., by motive power loss
- Pump rotor seized to non-rotating elements, e.g., by galling
- Flow passages blocked, e.g., by damages pump internals
- Shaft breakage, e.g., between driver and pump
- Broken coupling

3.2 Failure to operate as required

- Performance degradation by wearing open of inter-stage clearances
- Performance degradation by cavitation damage
- Partially blocked flow passages
- Insufficient NPSH (Net Positive Suction Head) to maintain pump prime

3.3 External leakage

- Failure of a shaft seal
- Failure of a static seal
- Rupture of casing

4. Failure Cause Analysis

4.1 Large forces and vibrations caused by pump unsteady flow at low flow

- Damage to impellers, diffuser vanes, bearings, inter-stage seal clearances
- High-cycle fatigue initiated shaft breakage
- Damage to thrust balancer and thrust bearing
- Low frequency rotor vibration from pump-system hydraulic instability

4.2 Shaft breakage

- Very high axial static plus dynamic loads at thrust balance runner
- Cyclic stress from shaft rotation with large fixed bending stresses
- Improper shaft heat treatment at manufacture
- Shaft material inclusion flaw
- Low-cycle material fatigue due to high magnitude cyclic thermal stresses
- Sudden seizure of rotor components to non-rotating parts
- Forces from excessive misalignment

4.3 Impeller and diffuser breakage

- Pump unsteady flow forces and pressure pulsation
- Fluid impingement at mismatched flow incidence angles
- Cavitation
- Material aging and deterioration mechanisms

4.4 Thrust balancer and thrust bearing failures

- Large dynamic axial forces from hydraulic flow instability at low flow
- Component failure initiated by high-cycle fatigue
- Material aging and degradation
- Improper heat treatment at manufacture
- Excessive temperature from static overload
- Bearing white metal creep and fatigue
- Hard debris particles flushed into small-clearance gaps

4.5 Coupling breakage

- Excessive misalignment
- Deterioration of alignment (e.g., support structure ceterioration)
- Loss of adequate lubrication

4.6 Seizure and galling

- Hard rubbing between rotating and non-rotating components
- Improper rubbing material combinations
- Hard debris particles in small clearances
- Adverse differential thermal expansions (radial or axial)
- Loss of shaft seal injection water
- Loss of bearing lubricant

5. Fundamental Technology Areas

- Structural integrity over time
- Friction and wear
- Rotor vibration
- Thermal distortions
- Next generation continuous monitoring and fault detection systems
- Earthquake-proof support structures (passive and active control)
- Pump hydraulic performance

Related Prior Work (References for Appendix-B)

1. M. L. Adams, "*ROTATING MACHINERY VIBRATION - From Analysis To Troubleshooting*", Marcel Dekker, New York, 2001, 354p.

2. M. L. Adams & W. Gates, *Paper on Vogtle Plant Feed Water Pump Vibration Problem, Diagnosis and Corrective Retrofit*, NRC/ASME Symposium, Washington, DC, July 2002.

3. M. L. Adams & E. Makay, "*Aging and Service Wear of Auxiliary Feed Water Pumps for PWR Nuclear Power Plants*", Vol. 1 Operating Experience and Failure Identification, NUREG/CR-4597, Vol. 1, Oak Ridge National Laboratory, ORNL-6282/V1, 89 p., July 1986.

4. E. Makay, M. L. Adams & W. Shapiro, "*Water Cooled Reactor* Coolant *Pumps Design Evaluation Guide*", Oak Ridge National Laboratory, ORNL TM-3956, 412p., Nov. 1972

5. E. Makay & J. A. Barrett, "*Changes in Hydraulic Component Geometries Greatly Increase Power Plant Availability and Reduced Maintenance Cost: Case Histories*", First International Pump Symposium, Texas A & M University, May 1984.

6. Loparo, K. A. and Adams, M. L., "*Development of Machinery Monitoring and Diagnostics Methods*", Proc., 52nd Meeting of the Society For Machinery Failure Prevention, April, 1998, Virginia Beach

7. Adams, M. L. and Loparo, K. A., "*Model-Based Condition Monitoring from Rotating Machinery Vibration*", EPRI Project WO3693-04, Final Report (in press), 2000.

APPENDIX-C: Final Agreement (Unsigned Copy)

COLLABORATION AGREEMENT

Between

CASE WESTERN RESERVE UNIVERSITY

And

FLOWSERVE CORPORATION

This Agreement (the "Agreement"), effective as of the 3rd day of December, 2003, is between Flowserve Corporation, a corporation domiciled in the State of New York having a principal place of business at 222 W. Las Colinas Blvd., Suite 1500, Irving, Texas 76092 (the "Company"), and Case Western Reserve University, an Ohio nonprofit corporation having its principal office at 10900 Euclid Avenue, Cleveland, Ohio (the "University").

The University makes its capabilities available to governmental and commercial entities for research which complements and does not conflict with the University's educational activities. In this spirit, the University and Company are prepared to undertake on behalf of the Nuclear Regulatory Commission ("NRC") a program of research into the viability of "virtual" monitoring of centrifugal pumps in nuclear applications as described by the proposal attached as Appendix I to be directed by Maurice Adams, Ph.D. (the University Principal Investigator"). To accomplish this, the University and the Company have agreed to work together as follows.

ARTICLE I: RESEARCH

1.1 **Staff and Facilities.** The University and Company will each provide staff and facilities to conduct the program of research as described in Appendix I ("Research Program"). The University will arrange for University Principal Investigator to direct the performance of the Research Program. The Company will arrange for its Principal Investigator, ("Company Principal Investigator") to direct that portion of the Research Program that will be performed by the Company. Should the Company Principal Investigator become unable to continue supervising the Research Program at the Company, the Company will inform the University and the Company will attempt to identify a replacement reasonably acceptable to the University. If they are unable to reach agreement, the University may terminate this Agreement upon written notice to the Company.

1.2 **Expenditure of Payments.** The University and Company will each use their best efforts to ensure that all payments made by the NRC are expended in accordance with Appendix II ("Budget"). Any amounts remaining after completion of the Research Program will be returned or used as directed by the NRC.

1.3 **Accounting.** At the written request of the University and not more frequently than annually, the Company will provide the University with an itemized accounting of expenditures for the Research Program. The Company will use their best efforts to ensure that the accounting is correct and complete.

1.4 **Reports.** The Company Principal Investigator will provide the University with written reports of the progress of the Research Program no less frequently than once per year. The Company will also assist in the preparation of reports to the NRC as reasonably requested by the University Principal Investigator.

1.5 **Site Visitations.** Upon reasonable notice, representatives of the University and Company may visit the others' facilities for purposes of meeting and talking with personnel engaged in the Research Program and reviewing records of the Research Program.

1.6 **Remedies.** The sole remedy as between the University and Company for breach of any of the sections of this Agreement shall be as outlined in Article 8.4.

1.7 **Period of Performance.** The work to be performed under this agreement shall commence on approximately the _____ day of _____, 2004 and shall continue until approximately the _____ day of _____, 2005.

1.8 **Award.** The University and Company agree to comply with the terms and conditions of the award from the NRC should the proposal be funded. If there is any conflict between the terms and conditions of the award and those of this Agreement, the terms and conditions of the award will take precedence.

ARTICLE II: PAYMENT

The University will make payments to the Company in accordance with the Schedule set forth in Appendix III ("Schedule of Payment").

ARTICLE III: INTELLECTUAL PROPERTY, PATENTS, AND LICENSING

Patent and invention rights will be in accordance with the following:

3.1. **Background Intellectual Property**; Should one or both parties possess rights in background intellectual property, that is, intellectual property not otherwise subject to this Agreement, which would be useful or essential to the practice or commercialization of the results of this Agreement, consideration should be given to negotiating license rights which will allow the use of this intellectual property in the practice and commercialization of the results of this Agreement, to the extent that the parties are legally able to do so. However, nothing contained herein shall obligate either party to contribute preexisting intellectual property without due consideration.

3.2. **Project Intellectual Property**; "Project Intellectual Property" means the legal rights relating to inventions, patent applications, patents, copyrights, trademarks, mask works, trade secrets, and any other legally protectable information, including computer software, first made or generated during the performance of this Agreement. The rights of the parties to inventions made by their employees or agents in the performance of this Agreement shall be as follows. Unless otherwise agreed in writing, Project Intellectual Property shall be owned by the party whose employee(s) or agent(s) make or generate the Project Intellectual Property. Jointly made or generated Project Intellectual Property shall be jointly owned by the Parties unless otherwise agreed in writing.

The Company shall have the first option to perfect the rights in jointly made or generated Project Intellectual Property unless otherwise agreed in writing, and shall have an option to negotiate for an exclusive commercial license to the jointly owned Project Intellectual Property. This option must be exercised within ten (10) months from the date of first written disclosure of the jointly owned Project Intellectual Property to the parties; any commercial license will be issued upon the standard terms and conditions as set forth in Appendix IV ("Commercial License Standard Terms and Conditions"). The joint owners may also consult and agree whether or not to file a patent application(s). If it is agreed that a joint patent application is to be filed, said application will be filed by the Company at the Company's expense.

3.3 **Patents;** The Parties agree to disclose to each other, in writing, each and every Invention that they believe may be patentable or otherwise protectable under the United States patent laws in Title 35, U.S.C. and that is made or generated during the performance of this agreement. The Parties acknowledge that they will disclose Inventions to each other within two months after their respective inventor(s) first disclose the invention in writing to the person(s) responsible for patent matters of the disclosing Party. All written disclosures of such inventions shall contain sufficient detail of the invention, identification of any statutory bars, and shall be marked confidential, in accordance with 35 U.S.C. Section 205.

Upon request by the Company, the University will cause patent applications on Project Intellectual Property of the University to be filed in the University's name. Such applications will be made at the Company's expense by attorneys selected by the Company. If the University does not file a patent application requested by the Company, the Company's sole redress will be to file the application in the University's name at the Company's expense, which it is hereby authorized to do.

Should the University determine that it is appropriate to file patent applications on Project Intellectual Property of the University or jointly owned Project Intellectual Property that have not been requested by the Company, the University will notify the Company of its determination (the notice must include a summary of the information on which the University based its determination). If the Company does not request the University to file the patent applications within ninety (90) days following receipt of the notice, the

University has discretion to file applications in its name and at its expense. In the event any patents issue in respect of such patent applications they will not be deemed to be included in any license.

Promptly upon receipt of an invoice, the Company will pay patent costs directly to patent counsel or to the University for those patent applications on Project Intellectual Property that have been filed at the Company's request by the University.

In a timely manner, the University and its counsel will keep the Company informed of the status of patent applications and patents.

3.4 **Licenses and Option to Project Intellectual Property of the University;** Each party hereto may use Project Intellectual Property of the other non-exclusively and without compensation in connection with research or development activities covered by this Agreement. In addition, the University shall grant to the Company a non-exclusive, royalty free license to use the Project Intellectual Property of the University for internal, non-commercial research purposes only.

The Company will have an option to negotiate for an exclusive license to the Project Intellectual Property of the University, subject to any rights of the Government therein, for commercial purposes. This option must be exercised within ten (10) months from the date of first written disclosure of the Project Intellectual Property to the Company. Any commercial license to the Project Intellectual Property of the University will be issued upon the standard terms and conditions as set forth in Appendix IV ("Commercial License Standard Terms and Conditions").

3.5 **Follow-on Work;** All follow-on work, including any licenses, contracts, subcontracts, sublicenses or arrangements of any type, shall contain appropriate provisions to implement the Project Intellectual Property rights provisions of this Agreement and insure that the Parties obtain and retain such rights granted herein in all future resulting research, development, or commercialization work.

ARTICLE IV: PUBLICATION AND CONFIDENTIALITY

4.1 **Confidentiality.** The University and the Company agree to advise their respective employees that it is necessary to hold in confidence all technical information and know-how (collectively "Knowledge") received from the other party in connection with the Research Program for a period of five (5) years from the date of written disclosure. All Knowledge deemed confidential will be marked "Confidential" by the disclosing party. Oral disclosures will not be considered confidential unless so designated at the time of disclosure and confirmed in writing within thirty (30) days thereafter. The University and the Company will use their best efforts to prevent disclosure of such Knowledge during the five (5) year period, except for disclosures by publications as provided in Section 4.2 below. Knowledge that becomes the subject matter of a license will be governed by the

terms of the license agreement. This Article will not apply, however, to Knowledge which:

A. is now in or enters the public domain as the result of its disclosure in a publication (as described in Article 4.2 below), the issuance of a patent, or otherwise without the legal fault of the receiving party;

B. the receiving party can prove was in its possession in written form at the time of the disclosure by the other party;

C. comes into the hands of the receiving party by means of a third party who is entitled to make such disclosure and who has no obligation of confidentiality toward the disclosing party; or

D. must be disclosed pursuant to a court order or as otherwise required by law.

4.2 **Publication.** The University will advise the University Principal Investigator that if the UniversityPrincipal Investigator proposes to publish any results or conclusions from the Research Program, he or she must allow the Company to review any proposed publication thirty (30) days prior to submitting it for publication. If within said period, the Company identifies proprietary information of Company which it desires to protect and notifies the University in writing that it wishes publication of identified portions to be delayed, the University will cause said publication to be delayed for up to an additional sixty (60) days in order that a patent application may be prepared and filed. If, within the thirty (30) day review period, Company identifies Knowledge disclosed by Company and marked Confidential, University will delete such Knowledge from any publication proposed during the confidentiality period.

ARTICLE V: COMPANY INFORMATION

Upon completion of the Research Program, any and all materials, devices, samples, software and documentation provided to the University by the Company will be returned to the Company, unless the parties otherwise agree.

ARTICLE VI: DISCLAIMER OF WARRANTIES

THE INFORMATION, MATERIALS AND SERVICES PROVIDED BY THE UNIVERSITY AND COMPANY UNDER THIS AGREEMENT ARE FURNISHED WITHOUT WARRANTIES OF ANY KIND, INCLUDING BUT NOT LIMITED TO WARRANTIES OF MERCHANTABILITY OR FITNESS FOR A PARTICULAR PURPOSE.

ARTICLE VII: INDEMNIFICATION

The Company will defend, indemnify and hold the University harmless from any claim, suit, loss, cost, damage, liability or expense to the extent resulting from the Company's use of any information or results from the Research Program. Such defense will be conducted by attorneys selected by Company and reasonably acceptable University. This obligation shall survive termination of the Agreement.

ARTICLE VIII: BREACH AND TERMINATION

8.1 **Term.** This Agreement will terminate upon completion of the Research Program. However, either party may terminate the Agreement for any reason with 30 day written notice. In the event of termination of the Agreement, those provisions of Articles IV, VI, VII and IX shall remain in effect, as well as any other provisions of the Agreement as are necessary to effect the purposes of the Agreement.

8.2 **Disposal of Funds.** In the event of termination of this Agreement prior to completion of the Research Program, the Company will return any funds received pursuant to Article II to the University except for funds that (i) have been expended or (ii) that will be required to fulfill commitments made in connection with the Research Program.

8.3 **Force Majeure.** Each of the parties will be excused from performance of this Agreement only to the extent that performance is prevented by conditions beyond the reasonable control of the party affected. The parties will, however, use their best efforts to avoid or cure such conditions. The party claiming such conditions as an excuse for delaying performance will give prompt written notice of the conditions, and its intent to delay performance, to the other party and will resume its performance as soon as performance is possible.

8.4 **Breach.** If either party at any time commits any material breach of the Agreement, and fails to remedy it within thirty (30) days after receiving written notice of the breach, the aggrieved party, at its option, may cancel this Agreement by notifying the other in writing. This remedy is in addition to any other remedies to which it may be entitled. Any failure to cancel this Agreement for any breach will not constitute a waiver by the aggrieved party of its rights to cancel this Agreement for any other breach whether of similar or dissimilar nature. Each Party's liability to the other shall be limited to the amount of actual direct damages or the amount the indemnifying Party has received pursuant to Article II, whichever is less.

ARTICLE IX: USE OF NAME

The Company will not use the name of the University, related schools or departments in any publication or marketing materials without the prior written consent of the University. The University will not use the name of the Company, or related subsidiaries, in any publication or marketing materials without the prior written consent of the Company.

ARTICLE X: NOTICES

All notices to the University under this Agreement will be in writing and sent by facsimile or by U.S. Mail to the addresses below:

If to the University:

Assoc. Vice President for Research
Case Western Reserve University
10900 Euclid Avenue
Cleveland, Ohio 44106-7015
Facsimile: 216-368-4679

If to the Company:

Mr. Fred Grondhuis
Flowserve FPD Operations
2300 Vernon Avenue
Vernon, California 90058
Facsimile: (323) 586-4137

ARTICLE XI: MISCELLANEOUS

11.1 **Governing Law.** This Agreement will be governed by and construed in accordance with the laws of the State of Ohio.

11.2 **Headings.** The captions or headings in this Agreement do not form part of the Agreement, but are included solely for convenience.

11.3 **Waiver, Amendment.** No waiver, amendment or modification of this Agreement will be effective unless in writing and signed by both parties.

11.4 **Assignment.** Neither party may assign this Agreement or any of its obligations hereunder without the prior written consent of the other party; however, this Agreement will be binding on any successors or permitted assigns of either party.

11.5 **Entire Agreement.** This Agreement embodies the entire agreement of the parties. It supersedes all prior written and verbal agreements between the parties with respect to the subject matter.

11.6 **Severability.** If any term or condition of this Agreement is contrary to applicable law, such term or condition will not apply and will not invalidate any other part of this Agreement. However, if its deletion materially and adversely changes the position of either of the parties, the affected party may terminate the Agreement by giving thirty (30) days written notice.

IN WITNESS WHEREOF, the parties have executed this Agreement as of the first date indicated above.

CASE WESTERN RESERVE UNIVERSITY
By:_____
Associate Vice President for Research

Date:_____

COMPANY
By:_____
Title:

Date:_____

I, the undersigned Principal Investigator, have read and understood this Agreement and agree to comply with its terms.

Signature:_____

Name:_____