EPRI MOV Performance Prediction Program Performance Prediction Methodology (PPM) Version 3.0 User Manual and Implementation Guide-NP

1006206NP

Computer Manual, May 2004

EPRI Project Manager
J. Hosler

EPRI • 3412 Hillview Avenue, Palo Alto, California 94304 • PO Box 10412, Palo Alto, California 94303 USA
800.313.3774 • 650.855.2121 • askepri@epri.com • www.epri.com

DISCLAIMER OF WARRANTIES AND LIMITATION OF LIABILITIES

ORGANIZATION(S) THAT PREPARED THIS REPORT

MPR ASSOCIATES INC.

"This report was prepared in accordance with the applicable provisions of 10CFR50 Appendix B".

CITATIONS

This report was prepared by

MPR Associates, Inc
320 King Street
Alexandria, VA 22314

Principal Investigator
T. Walker

This report describes research sponsored by EPRI.

This report is a corporate document that should be cited in the literature in the following manner:

EPRI MOV Performance Prediction Program: Performance Prediction Methodology (PPM) Version 3.0 User Manual and Implementation Guide-NP; EPRI, Palo Alto, CA: 1006206NP.

REPORT SUMMARY

This manual provides instructions for running Version 3.0 of the EPRI Motor-Operated Valve (MOV) Performance Prediction Methodology (PPM) Computer Code. It provides guidance in defining inputs so that conservative predictions of required thrust and torque can be made for gate, globe, and butterfly valves.

Background
As part of the EPRI MOV Performance Prediction Program (PPP) improved methodologies for analyzing gate, globe and butterfly valves were developed and implemented in the form of a computer program named the EPRI MOV PPM. In Versions 1.0 and 2.0 of the PPM the technical modules for evaluating system conditions and gate, globe, and butterfly valve performance were combined with a DOS-based user interface module (UIM). In Version 3.0 of the PPM (PPM for Windows), a Windows-based user interface module (WinUIM) has been developed to interface with the user and execute the technical modules. Version 3.0 also automates several of the calculations that previously needed to be performed by hand.

Objectives
To provide guidance and instructions for implementing Version 3.0 of the PPM code to predict the required stem thrust or torque to operate gate, globe, and butterfly valves under user-defined design basis conditions.

Approach
Without changing the technical modules, the project team modified the UIM to be Windows-based and automate several calculations that previously had to be performed by hand. Previous Versions of the PPM code came with separate Users Manuals and Implementation Guides. The project team combined the Users Manual and Implementation Guide for Version 3.0 of the PPM Code into a single document.

Results
This document provides guidance and instructions for using Version 3.0 of the PPM (PPM for Windows) to predict the stem thrust or torque required to operate a valve under user-specified design basis conditions. PPM for Windows enables the user to specify the required inputs for an analysis, run predictions of the stem thrust or torque required to stroke the valve, and display and print the results. This manual provides detailed instructions for using the program, including how to determine inputs, how to evaluate various valve types, and how to produce hardcopy output in the form of prediction reports and plots of key performance parameters.

EPRI Perspective

Version 3.0 of the PPM (WinPPM) and this associated Users Manual/Implementation Guide represents a significant improvement. The process for defining inputs has been simplified and Windows-based pull down menus and tabs facilitate navigation through the various code features.

Keywords

Valves
Valve Performance

EXECUTIVE SUMMARY

As part of the EPRI MOV Performance Prediction Program (PPP), improved methodologies for analyzing gate, globe and butterfly valves were developed and implemented in the form of a computer program called the Performance Prediction Methodology (PPM). In Versions 1.0 and 2.0 of the PPM, these technical modules were combined with a DOS-based user interface module (UIM). The UIM provided an interface with the user and ensured that the various technical modules were run properly. In Version 3.0 of the PPM (PPM for Windows), a Windows-based user interface module (WinUIM) has been developed to interface with the user and execute the technical modules. This updated version of the software also performs many of the calculations that users were required to perform by hand in Reference (1). Although Versions 1.0 and 2.0 of the PPM were only applicable to MOVs, Version 3.0 has been adapted to cover air operated valves (AOVs) and hydraulically operated valves (HOVs).

This documents provides guidance and instructions for using Version 3.0 of the PPM (PPM for Windows) to predict the stem thrust or torque required to operate a valve under user-specified design basis conditions. PPM for Windows enables the user to specify the required inputs for an analysis, run predictions of the stem thrust or torque required to stroke the valve and display and print the results. This manual provides detailed instructions for using the program, including how to determine inputs, how to evaluate various valve types and how to produce hardcopy output in the form of prediction reports and plots of key performance parameters.

CONTENTS

LIST OF FIGURES

LIST OF TABLES

1
INTRODUCTION

Background

As part of the EPRI Motor-Operated Valve (MOV) Performance Prediction Program (PPP), state-of-the-art engineering methodologies were developed to predict the thrust or torque required to operate gate, globe and butterfly valves installed in safety-related service in nuclear power plants. A methodology was also developed to predict the pressure drop across a valve as a function of the position of the valve disk based on the characteristics of the valve and the system in which the valve is installed. These methodologies were implemented in the form of "stand-alone" computer programs ("technical modules"). These modules have well-defined inputs and outputs which allow the different programs to "interface" when executed properly to predict the stem thrust or torque required to operate a valve under various conditions. The following technical modules were developed:

- System Flow Module (SFM)
- Gate Valve Module (GATM)
- Globe Valve Module (GLBM)
- Butterfly Valve Module (BFM)

In Versions 1.0 and 2.0 of the EPRI MOV Performance Prediction Methodology computer program (PPM), these technical modules were combined with a DOS-based user interface module (UIM). The UIM provided an interface with the user and ensured that the various technical modules were run properly. Guidance for using the PPM software to evaluate a valve application was provided in Reference (1).

In Version 3.0 of the PPM (PPM for Windows), a Windows-based user interface module (WinUIM) has been developed to interface with the user and execute the technical modules. This updated version of the software also performs many of the calculations that users were required to perform by hand in Reference (1). Although Versions 1.0 and 2.0 of the PPM were only applicable to MOVs, Version 3.0 has been adapted to cover air operated valves (AOVs) and hydraulically operated valves (HOVs).

Purpose

The purpose of this document is to describe how to use PPM for Windows to evaluate valve applications for required stem thrust or torque. This report is not only a user manual for the PPM

for Windows software but also provides all the guidance needed to determine inputs into the program and evaluate the results, thus replacing the Implementation Guide (Reference 1).

Verification and Validation

Each technical module has been verified and validated in accordance with a Quality Assurance (QA) Program that meets the requirements of 10 CFR 50, Appendix B. This purpose of this effort was to ensure that the software properly implements the methodologies developed as part of the PPP. In addition, the equations within the technical modules (SFM, GLBM, GATM and BFM) were validated separately. This validation ensured the accuracy of the engineering models by comparing predictions against the results from flow loop and *in situ* testing performed within the PPP. The results of these validation efforts are described in References (9) - (12).

The Windows-based user interface module was also developed under a 10 CFR 50, Appendix B QA program. Validation included testing to ensure the technical modules are properly executed by the program and the functions required from WinUIM are properly executed.

Assessment

The DOS-based version of the PPM was assessed against selected strokes from EPRI flow loop and *in situ* testing to determine the accuracy of the predictions when used as described in Reference (1). The results of this assessment are documented in Reference (2). Since PPM for Windows uses the same technical modules as the DOS version, the results of the assessment are considered applicable to PPM for Windows.

Definitions

The following terms are used in this report:

<u>Beta ratio:</u> A factor used to calculate the flow rate through flow restrictors (orifices, nozzles, venturis, etc.), calculated using the following equation:

Equation 1-1:

$$\beta = \frac{d_r}{d_p}$$

d_r: restrictor diameter
d_p: pipe inside diameter

<u>BFM:</u> Butterfly Valve Model -- one of the technical models that make up PPM for Windows. The BFM receives as input information about the valve and calculates the required stem torque to stroke the valve as a function of stroke position. The model is implemented in the form of a computer software module that is executed automatically within PPM for Windows. In this document, BFM refers to both the engineering model and the software module.

BFM Steam Method: BFM steam method. A simplified approach required for butterfly valves with compressible flow; does not require the user to review system isometric drawings or calculate piping equivalent lengths.

Blowdown: A flow condition where the flow is driven by a pressurized tank upstream of the valve, and the valve limits the flow (i.e., is the controlling resistance) for a majority of the stroke.

Design Basis DP: The differential pressure (DP) across the valve, with the valve fully closed, under design basis conditions.

Design Basis Flow Rate: The flow rate through the valve, with the valve fully open, under design basis conditions. The conditions associated with this flow rate must be the same as for the design basis DP.

Equivalent length: The length of piping of a given diameter across which the pressure drop would be the same as that which would occur across a particular flow component. Reference (3) provides data and equations to calculate the equivalent length for common flow components.

ERM: Equivalent resistance method. A simplified system evaluation method for predicting DP and upstream pressure for incompressible flow; does not require the user to review system isometric drawings (unless water inertia is a concern) or calculate piping equivalent lengths. Recommended for gate and butterfly valves as long as the fluid medium is water and the fluid doesn't flash at any time during the stroke, for the full range of possible temperatures.

Flow coefficient: The flow, in gpm, of 60°F water through a component with a pressure drop of 1.0 psi. Reference (3) provides flow coefficients for common valves, fittings and restrictors. Default data for flow coefficient as a function of stroke position are provided in PPM for Windows for gate and butterfly valves. Flow coefficients for globe valves are not required if the Single Point Method is used.

Full SFM: Full system flow model. A system evaluation method required for gate and globe valves for compressible flow (e.g., steam flow or fluid flow where flashing occurs at the maximum design basis temperature). Requires the user to review system isometric drawings and calculate piping equivalent lengths.

Full stroke length: The distance, in inches, the valve stem travels from the fully open position to the fully closed position. If the user chooses to use the default flow data provided by PPM for Windows for gate valves, the full stroke length should be set to the inside diameter of the seat ring seating surface. Note that for gate valves, the full stroke lengthis typically less than the mechanical stroke of the valve.

Fully closed position: The point at which flow through the valve theoretically stops. For gate valves, this position is assumed the point at which the OD of the seating surface of the disk intersects the ID of the seating surface of the seat ring, at the location farthest from the stem/disk connection. Note that gate valves typically travel past this position to achieve wedging of the disk in the seat rings. For globe and butterfly valves, this point is the point at which the valve

disk is fully seated. Globe and butterfly valves typically stop in this position; however, butterfly valves may rotate past this point as the disk compresses the elastomer seat.

Fully open position: The point during the valve stroke at which the disk has traveled a distance from the fully closed position equal to the full stroke of the valve. For gate valves, users will typically specify that the default flow data provided by PPM for Windows be used. In this case, the fully open position is assumed the point at which the OD of the seating surface of the disk intersects the ID of the sealing surface of the seat ring, at the location closest to the stem/disk connection. For butterfly valves, fully open is the point at which the disk is parallel with the pipe axis, i.e., the disk angle is 90°. Detailed definition of the fully open position is not required for globe valves since thrust evaluations are only performed at or just prior to seating.

GATM: Gate Valve Model -- one of the technical models that make up PPM for Windows. The GATM receives as input detailed information about the valve and calculates the required stem thrust as a function of valve stroke position and evaluates the potential for valve internal damage. Packing load must be supplied by the user. Loads due to DP are calculated within the GATM. The model is implemented in the form of a computer software module that is executed automatically within PPM for Windows. In this document, GATM refers to both the engineering model and the software module.

GLBM: Globe Valve Model -- one of the technical models that make up PPM for Windows. The GLBM receives as input detailed information about the valve and calculates the required stem thrust to stroke the valve. The model is implemented in the form of a computer software module that is executed automatically within PPM for Windows. In this document, GLBM refers to both the engineering model and the software module.

Loss (resistance) coefficient (K): The number of velocity heads lost due to a valve or fitting. A value of K is associated with a particular pipe diameter. Reference (3) provides loss coefficients for common valves and fittings.

Pipe: A pipe segment used in the SFM which has frictional and inertial characteristics which are equivalent to a section of the actual piping system being modeled.

Pipe inertia: Fluid inertia of a specific pipe used in the SFM. Fluid inertia is a factor to account for the pressure drop due to deceleration of fluid as the valve closes. Fluid inertia is calculated for a section of system piping using the following equation:

Equation 1-2:

$$I = \sum_{i=1}^{n} \frac{L_i}{A_i}$$

I: pipe inertia, ft^{-1}
L_i: length of system piping section i connected in series
A_i: flow area of system piping section i

A screening criterion is provided within PPM for Windows to determine whether a particular valve application is susceptible to water inertia effects.

Pressure drop ratio factor, x_T: The valve pressure drop ratio at which choked flow occurs under compressible flow conditions, defined in ANSI/ISA-75.01. Default x_T values are provided within PPM for Windows for gate and butterfly valves. Optionally, the user may provide this data. Values of x_T are not needed for globe valves if the Single Point Method is used.

Pressure recovery factor, F_L: A factor to account for the effect of internal geometry of a valve on its capacity at choked flow, defined in ANSI/ISA-75.01. Default F_L values are provided within PPM for Windows for gate and butterfly valves. Optionally, the user may provide this data. F_L values are not needed for globe valves if the Single Point Method is used.

SFM: System Flow Model -- one of the technical models that make up PPM for Windows. The SFM receives input related to the configuration about the system in which the valve is installed, and calculates the DP and upstream pressure as a function of stroke position. The model is implemented in the form of a computer software module that is executed automatically within PPM for Windows. In this document, SFM refers to both the engineering model and the software module.

SPM: Single point method. A simplified system evaluation method for evaluating globe valves that uses the "user-input DP" software option; recommended for all globe valve applications.

Stroke position: The distance from the fully closed position divided by the full stroke, multiplied by 100, expressed in terms of percent; same as percent open.

Stroke time: The time required for the valve to travel its full stroke. Note that this stroke time is not necessarily the full mechanical stroke time for a gate valve.

Torque reaction arm: A device that reacts operator torque in the valve stem to prevent torque from being transmitted to the disk.

Unpredictable: A term used for a gate valve stroke to indicate that damage may occur to the valve internals during the stroke. In this case, the required thrust cannot be predicted by PPM for Windows.

References

1. *EPRI MOV Performance Prediction Program: Performance Prediction Methodology (PPM) Implementation Guide*: Electric Power Research Institute, Palo Alto, CA: Report TR-103244.

2. *EPRI MOV Performance Prediction Program: Performance Prediction Methodology (PPM) Assessment Report.* Electric Power Research Institute, Palo Alto, CA: Report TR-103231.

3. *Flow of Fluids Through Valves, Fittings, and Pipe*, Crane Technical Paper Number 410, 1986.

4. *In Situ Test Guide For Motor-Operated Valves.* Electric Power Research Institute, Palo Alto, CA: Revision 1 dated October 1990. Report NP-7078.

5. *Application Guide for Motor-Operated Valves in Nuclear Power Plants.* Electric Power Research Institute, Palo Alto, CA: March 1990. Report NP-6660-D.

6. Application *Guide for Motor-Operated Butterfly Valves in Nuclear Power Plants.* Electric Power Research Institute, Palo Alto, CA: January 1993. Report NP-7501.

7. I. E. Idelchik, *Handbook of Hydraulic Resistance, Coefficients of Local Resistance and* Friction*,* National Technical Information Service, U. S. Department of Commerce, AEC-TR-6630, 1986.

8. *Fluid Meters*, American Society of Mechanical Engineers, Sixth Edition, 1971.

9. *EPRI MOV Performance Prediction Program: Gate Valve Model Description Report.* Electric Power Research Institute, Palo Alto, CA: Report TR-103229.

10. EPRI *MOV Performance Prediction Program: Globe Valve Model Report.* Electric Power Research Institute, Palo Alto, CA: Report TR-103227.

11. EPRI *MOV Performance Prediction Program: System Flow Model Description Report.* Electric Power Research Institute, Palo Alto, CA: Report TR-103225.

12. *EPRI MOV Performance Prediction Program: Butterfly Valve Model Description Report.* Electric Power Research Institute, Palo Alto, CA: Report TR-103224.

13. *EPRI MOV Performance Prediction Program: Motor-Operated Valve Margin Improvement Guide.* Electric Power Research Institute, Palo Alto, CA: February 1992. Report TR-100449.

14. *EPRI MOV Performance Prediction Program: Addendum 1 to EPRI TR-103237-R2*: Electric Power Research Institute, Palo Alto, CA: Report AD-110778, October 1998.

2
SOFTWARE REQUIREMENTS AND INSTALLATION

Minimum and Recommended System Requirements

The table below summarizes the minimum and recommended system requirements for using PPM for Windows.

Feature	Minimum	Recommended
Processor	Pentium, 90 MHz, or equivalent	Pentium II, 266 MHz (or higher), or equivalent
Operating system	Windows 95/98 or NT with Service Pack 3	Windows 95/98 or NT with Service Pack 3
CD Drive	CD drive	8x CD drive
Memory	64 megabytes	128 megabytes
Hard disk space	60 megabytes	150 megabytes
Display resolution	800 x 600 SVGA, with 2 MB VRAM	1024 x 768 SVGA, with 4 MB VRAM (and above)
Mouse	Microsoft (or compatible)	Microsoft (or compatible)

An installation program is provided with the program. The procedure for installing PPM for Windows is described below.

Installation Procedure

1. Insert the PPM for Windows installation CD in the CD drive.

2. Click on the Windows *Start* button, and select *Run*.

3. In the box labeled *Open:* type "[CD drive letter]: Setup" and click the *OK* button.

4. Follow the instructions in the installation program to install PPM for Windows in the desired directory. Note that during the installation process, you may receive one or more messages indicating that a file being copied as part of the PPM for Windows is not newer than the version already on your computer. If you receive, this message, it is recommended that you chose to keep your existing file by clicking on the *Yes* button. If you are prompted to restart

your computer during this process, you will need to rerun the PPM for Windows Setup program (see step 3 above). In addition, you may receive a “path file access” error during the installation processes. If such an error is encountered, click “Retry”. This error message will not affect the installation.

5. When the installation is complete, a message will be displayed to inform the user that the installation was successful. The installation process should take less than 10 minutes.

6. Once PPM for Windows is installed, the user must customize the four technical module executable files to ensure proper program operation, as follows.

   - Open Windows Explorer by right-clicking on the Windows *Start* button and clicking on *Explore*.

   - Access the following directory -- \Program Files\EPRI MOV PPM, Version 3.0\Module. Right-click on the file Bfm.exe and select *Properties*.

   - On the *Program* tab, make sure the box labeled *Close on exit* is checked. Repeat this step for the files Gatm.exe, Glbm.exe and Sfm.exe.

Installation Verification

Proper installation of PPM for Windows and compatibility of the program with the computer configuration should be verified using the benchmark problems provided. A procedure for performing this installation verification is provided below. The user may need to review Sections 4 and 8 of this manual before performing this verification.

1. Run PPM for Windows by clicking on the Windows *Start* button, then clicking on *Programs*, then on *EPRI MOV PPM* and finally on *PPM 3.0*.

2. Open the file "gate valve benchmark.vlv". This file is located in the C: \Program Files\EPRI MOV PPM, Version 3.0\Benchmark folder, using the *Open* option in the File menu or the *Open* button on the button bar.

3. From the Prediction menu, select Run. When the prediction is complete, print out a copy of the prediction report using the Print option of the File menu.

4. Compare the prediction report with the corresponding prediction report in Appendix B to verify that the inputs and outputs are the same.

5. Repeat steps 2 through 4 for the files "globe valve benchmark" and "butterfly valve benchmark." Compare the prediction reports with the corresponding prediction reports in Appendix B to verify that the inputs and outputs are the same.

3
PROGRAM OVERVIEW

PPM for Windows evaluates a valve application for required thrust or torque under design basis conditions. The prediction of required thrust or torque is performed in the same way as in the DOS versions of the PPM (Version 1.0 or 2.0), i.e., by executing the system, gate valve, globe valve and butterfly valve modules, as applicable. The differences between PPM for Windows and the DOS versions are that PPM for Windows:

- Allows the user to document the inputs for the valve more completely, including a description of the design basis scenarios and conditions for the valve application.
- Allows the user to input a list of references for all inputs and specify a reference number for each input.
- Includes tables showing the applicability requirements for use of the program and allows the user to document evaluation of the valve application against these requirements.
- Allows the user to input comments and recommendations related to the prediction.
- Produces a report that can be customized to include the inputs, the applicability evaluation, the prediction report, the list of comments and recommendations and plots of key input and output parameters.

Many of the hand calculations that are required in Reference (1) to implement the DOS versions of the PPM are performed by PPM for Windows. Accordingly, the effort required by the user to evaluate a valve application is much less when using PPM for Windows.

Evaluating a valve application using PPM for Windows includes the following steps.

- Determining and specifying inputs and references for each input. Some inputs are required to execute a prediction of required thrust or torque and some are optional.
- Evaluating the applicability of PPM for Windows to the valve application.
- Running a prediction to generate a prediction report.
- Evaluating the prediction report results and inputting comments and recommendations related to the prediction.

The DOS versions of the PPM included a user manual, with guidance on how to use the software, and an Implementation Guide (Reference 1), with guidance on how to evaluate a valve

application. This user manual performs both of these functions for PPM for Windows. Sections 2, 4 and 8 provide guidance on using the software. Section 2 provides instructions for installing the software, Section 4 provides general guidance on how to access and use certain features of the software, and Section 8 is a reference guide that provides help on all menu options and forms.

Sections 5, 6 and 7 provide guidance for using PPM for Windows to evaluate a valve application. Section 5 provides guidance for determining inputs, Section 6 provides guidance for evaluating different valve types, and Section 7 describes how to evaluate the results of a prediction.

Comparison of Results Obtained from Previous Versions

The approaches used to predict required thrust and torque in Version 3.0 of the PPM are essentially identical to the approaches used in Version 2.0. Accordingly, it is expected that thrust and torque predictions from Version 3.0 will be identical to Version 2.0 predictions. However, because of rounding of inputs and intermediate variables (e.g., variables that are calculated by the user with Version 2.0 but calculated by PPM for Windows with Version 3.0), the answers may vary slightly. As discussed in Reference (14), gate valve thrust predictions from Version 2.0 are typically up to about 1% higher than Version 1.0 predictions. Therefore, Version 3.0 gate valve thrust predictions would be expected to be up to 1% higher than Version 1.0 predictions.

4
USING THE SOFTWARE

This section provides a general description of PPM for Windows. For a detailed description of the program, refer to Section 8.

Main Menu

The main menu is directly below the program title bar and includes five options -- File, Edit, Prediction, Window and Help. Clicking on a main menu option displays a pull-down menu with additional options. See Section 8 for a description of the function of each option on these pull-down menus.

Button Bar

A button bar is displayed directly beneath the main menu. The button bar allows the user to execute common tasks with a single mouse click rather than using the pull-down menus. The three buttons on the left side of the button bar can be used in place of the following selections on the File menu -- New, Open and Save (see Section 8). The seven buttons on the right side of the button bar are discussed later in this section. To determine the function of a button, position the mouse cursor over the button. A pop-up comment will appear to describe the function of that button.

Working with Files

PPM for Windows saves all inputs and outputs related to an evaluation in a single file with a .vlv extension, referred to as a Valve file. Valve files can be created using the New option in the File menu, opened using the Open option in the File menu or saved using the Save, Save As or Save All options in the File menu. Buttons are provided on the button bar for the New, Open and Save functions.

Converting PPM Version 1.0/2.0 .MOV Files to Version 3.0 .VLV Files

PPM for Windows inlcudes a wizard to convert .mov files created in Versions 1.0 or 2.0 of the PPM to .vlv files that can be used in Version 3.0. To initiate the wizard, choose Convert from the File menu, click on the Next button and select an .mov file to be converted. Then click on the Next button. PPM for Windows will access the .mov file and display general information about the prediction to allow the user to verify that the desired file was selected. If the information is correct, click on the next button. PPM for Windows will display the detailed information obtained from the .mov file (and other files associated with the .mov file). If this information is correct, click on the Next button. To complete the conversion, click on the Finish

button. A Version 3.0 .vlv (Valve file) with the same name as the .mov file is now loaded into PPM for Windows and can be edited by the user.

Note that, unlike Versions 1.0 and 2.0, Version 3.0 of the PPM automatically implements the various system evaluation methods (e.g., the ERM and SPM), rather than requiring the user the implement these methods manually. As a result, the required inputs related to the system are different in Version 3.0 than in Versions 1.0 and 2.0. Therefore, the Conversion Wizard only obtains the valve-specific information from the .mov file.

Accessing Information in a Valve File

To begin an evaluation, the user must create or open a Valve file using the New or Open option, respectively, in the File menu. There are also buttons on the button bar to create and open valve files. When a new Valve file is created, the user is prompted for the type of valve being evaluated (butterfly, gate or globe valve). Information in a Valve file is broken down into seven categories, each with its own input or output form, as listed below.

- Description form (input) -- Allows user to input general information about the valve and its required functions. These parameters do not affect the prediction of required thrust or torque and can be input before or after the prediction is run.

- Inputs form (input) -- Allows user to specify inputs required to perform a prediction of required thrust or torque. The user can also input a reference number for each input. All inputs must be specified before a prediction is run. If any of these inputs are modified after a prediction is run, a new prediction must be run.

- References form (input) -- Allows user to input a list of references used to develop inputs for the prediction. These parameters do not affect the prediction of required thrust or torque and can be input before or after the prediction is run.

- Comments and Recommendations form (input) -- Allows the user to input a list of comments and a list of recommendations, based on the results of the prediction. This information does not affect the prediction of required thrust or torque and can be input before or after the prediction is run.

- Applicability form (input) -- Allows the user to evaluate the applicability of PPM for Windows to the valve application. This form does not affect the prediction of required thrust or torque and can be input before or after the prediction is run.

- Plots (output) -- Shows plots of selected input and output parameters for the prediction.

- Report (output) -- Shows the prediction report from execution of a PPM for Windows prediction of required thrust or torque.

Once a Valve file is loaded or opened, these forms are accessed using the seven buttons to the right of the button bar. To determine the function of a button on the button bar, position the mouse cursor over the button. A pop-up comment will describe the function of that button.

Section 5 provides guidance for determining inputs, and Section 7 discusses how to evaluate the output forms.

Inputting Information

Some PPM for Windows inputs are required to predict required thrust or torque, and some are optional to allow the user to more thoroughly document evaluation of a valve application. The Inputs form contains all of the inputs required to run a prediction. Based on the type of valve being evaluated and other user inputs, PPM for Windows determines which inputs are required for a specific analysis and only requests the required inputs from the user. If an input is not required for a given prediction, its field is disabled and shown in gray. Values for all required inputs must be specified before a prediction is run. If any of these inputs are modified after a prediction is run, a new prediction must be run. All required inputs are printed in the prediction report for verification purposes. All other inputs are optional and do not affect the prediction. These optional inputs can be specified before or after a prediction is run without affecting the results of the prediction. Optional inputs include the Valve Description, References, Comments and Recommendations and the Applicability tables. These other inputs are not included in the prediction report but can be printed out using the Print option on the File menu. They can also be included in the user-defined report.

Running Predictions

Once all inputs required for a prediction are specified by the user, a prediction of required thrust or torque is performed by selecting Run from the Prediction menu. During the calculation, DOS screens are displayed to the user as each of the technical modules is executed. These DOS screens provide information on how the calculation is proceeding. The type of information displayed in this DOS screen depends on the technical module. The GATM uses the DOS screen to display the status of its initialization routines and the status of the calculation during the valve stroke. The gate valve initialization routines:

- Read the valve input file,
- Perform input checking on the valve input parameter information,
- Initialize the friction and fluid algorithms,
- Calculate the initial disk orientation, and
- Read the valve DP file (created by the SFM).

During the calculation of stem thrust, the following information related to the status of the gate valve calculation is displayed:

- The stroke direction (opening or closing),
- The stroke position in percent open,

- A two-digit code that indicates the type of disk-to-body contact mode. See Reference (9) for a discussion of disk-to-body contact modes. The following modes are the most common expected for typical valve strokes:

  10: disk flat against body guide rail
  11: disk tipped on body guide rail
  20: disk flat on downstream body seat
  21: disk tipped on downstream body seat

- The angle, θ, at which the disk is tipped (an angle of zero indicates that the disk is not tipped), and

- Whether or not the valve stem T-head is slipping in the disk T-slot.

The GLBM uses the prediction status screen to display the status of the calculation (e.g., reading input files, calculating stem force and calculation complete). During the calculation of stem thrust, the GLBM displays the stroke position, in percent open. The BFM briefly displays prediction status information during execution. The system flow module displays the percent completion of its calculations.

Once the prediction is completed, PPM for Windows creates a prediction report that can be accessed by clicking on the Report button on the button bar. In addition, plots of selected parameters can be viewed by clicking on the Plots button on the button bar.

Working with Comments and Recommendations

PPM for Windows allows the user to input comments and recommendations for a Valve file. Comments may relate to how inputs were determined, limitations on use of the results based on applicability considerations and approaches used to model the application. Recommendations may include modifications to address prediction results and further analyses needed to justify use of PPM for Windows for a valve application. Comments and recommendations can be input by the user by clicking on the Comments and Recommendations button on the button bar. The *Add* button allows the user to enter additional comments and recommendations. In addition, the user can create "standard" comments and recommendations that are saved with PPM for Windows and can be inserted into any Valve file. Standard comments and recommendations are created and edited by clicking on Comments or Recommendations in the Edit menu.

Program Output

The Print option in the File menu allows the user to print out any of the following:

- The Description input form

- The Inputs input form

- The References input form

- The Comments and Recommendations input form
- The Applicability input form
- The Prediction Report
- Any of the input or output Plots

The user can also create and print a user-defined report, which can include any of the input forms and outputs listed above. To define the contents of this report, select the User Defined Report option on the Edit Menu. The sections below discuss the program outputs - the Prediction Report and the Plots.

Prediction Report

PPM for Windows produces a prediction report after a successful prediction. Each prediction report contains the following sections:

- Summary of Results
- Calculated Values
- Inputs
- Tables

The Summary of Results section summarizes the results of the prediction, including the predicted thrust or torque and any warning messages generated. Specific contents of this section are discussed in Section 7 for each valve type. The Calculated Values section lists selected parameters calculated as part of the prediction. Specific contents of this section are listed in Section 7. The Inputs section lists all inputs used to generate the prediction to allow traceability of the results. The Tables section contains tables of predicted DP and flow versus stroke position and predicted stem thrust or torque versus stroke position. Section 7 provides guidance on evaluating the results of a required thrust/torque prediction.

Plots

Plots can be viewed of the input and output parameters listed below. Some plots are only available for certain system evaluation methods (e.g., ERM and Full SFM).

- Valve Flow Coefficient vs. Stroke Position/Disk Angle
- Valve DP vs. Stroke Position/Disk Angle
- Flow Through Valve vs. Stroke Position/Disk Angle
- Pressure Upstream of Valve vs. Stroke Position/Disk Angle

- Valve DP vs. Flow
- Stem Thrust vs. Stroke Position, or Stem Torque vs. Disk Angle

The user can choose to include any or all of the plots in the user-defined report.

Error Messages

If an *error* occurs during execution of one of the technical modules, the prediction is stopped and an error message reported to the user. Error messages are typically related to the quality of the input parameters (e.g., inconsistent valve dimensions such as inside diameter greater than outside diameter). If such an error occurs, the inputs identified in the error message should be reviewed for accuracy.

If a *warning* occurs during execution of one of the technical modules, the prediction will continue, but the warning message will be added to the prediction report.

Appendix A lists and describes the warning and error messages that may be generated during a prediction. **–Content Deleted, EPRI Proprietary Material--**

The GATM iterates to calculate the required stem thrust at each valve position during the valve stroke. If this iteration does not converge within a specified number of iterations, GATM asks the user if it should continue iterating, skip this particular stroke position, or try another contact mode. If this message appears, the user should choose to continue the calculation. If the calculation still fails to converge at that stroke position, the user should select to try another contact mode. If the calculation still does not converge, the user should skip the stroke position.

Running Batch Predictions

Required thrust/torque predictions can be executed for several saved Valve files using the "batch" feature of PPM for Windows. The batch feature is accessed by clicking on Batch in the Prediction menu. The batch features allows the user to create, save and load batch files (*.bat filename extension), which contain a list of Valve files. When a batch run is performed, required thrust/torque predictions are run for each file. To view the results of the batch predictions, the user must load the Valve file.

Tutorial

The steps below lead the user through a typical evaluation using PPM for Windows. The prediction report in Appendix B can be used to obtain sample inputs to use in the tutorial below and to verify that the correct results are obtained.

1. Run PPM for Windows by clicking on the Windows Start button, then clicking on Programs, then on EPRI MOV PPM and finally on PPM 3.0.

2. Click on the New button on the button bar; then double-click on Gate Valve to create a new gate valve form. The Valve Description form should be displayed.

3. Click on the Refs button on the button bar, and input any references used to develop program inputs. References are optional and do not affect the required thrust prediction. As inputs values are input in the steps below, specify reference numbers where appropriate.

4. On the Valve Description form, input the requested information, if desired. This information is not required to predict required thrust.

5. Click on the Inputs button on the button bar. The Design Basis tab of the Input Form will be displayed. Input the requested design basis information.

6. Click on the Pipe Data tab of the Input Form. Input the pipe information, if requested.

7. Click on the Restrictors tab of the Input Form. Input the restrictor information, if requested.

8. If the user selected to input DP and upstream pressure, rather than using the SFM, click on the User Input DP tab of the Input form, and enter the requested information.

9. Click on the Disk, Stem/Body, Other Valve and Flow Data tabs and input the requested information.

10. Click on the C/R button on the button bar, and input any comments or recommendations associated with the PPM for Windows evaluation. Comments and recommendations are optional and do not affect the required thrust prediction.

11. Click on the App button on the button bar, then on the tab labeled System. The System applicability table of the Applicability Form will be displayed. Indicate whether the valve application being evaluated meets each of the system applicability requirements.

12. Click on the Valve tab of the Applicability Form, and indicate whether the valve application meets each of the valve applicability requirements. Applicability information is optional and does not affect the required thrust prediction. The user is now ready to run a required stem thrust prediction.

13. To run a prediction, select Run from the Prediction main menu option. The technical modules will be executed by PPM for Windows to obtain a prediction of required stem thrust. If the SFM or GATM completes execution (indicated by messages at the upper left of the DOS windows stating "Finished - SFM" or "Finished - GATM") but the window remains open, the technical modules need to be configured to close when execution is completed. In this case, click on the button labeled "Properties" on the button bar of the DOS window (not the PPM for Windows button bar), and click on "Close on Exit" then OK. Then click on the "x" in the upper right corner of the DOS window. The prediction should continue.

14. A message will be displayed when the prediction is complete. Click on OK.

15. To view the prediction report, click on the Report button on the button bar. Use the buttons on the report button bar to format, size, scroll through and print the prediction report.

16. To view plots of key input and output parameters, click on the Plots button on the button bar. Choose the desired plot from the "available plots" pull-down menu.

17. If desired, click on the C/R button on the button bar, and input additional comments and recommendations based on the prediction results.

18. Save the PPM for Windows evaluation using the File - Save or File - Save As menu option.

5
DETERMINING PREDICTION INPUTS

This section lists and describes the information required to predict required thrust or torque for a valve application using PPM for Windows. These inputs are specified by clicking on the Inputs button on the button bar. The inputs are broken down into several groups, each represented by a tab across the top of the Inputs form. To access each group, click on the appropriate tab. Refer to Section 1 for definitions of selected terms.

To run a thrust or torque prediction, the user needs to obtain information in three basic categories:

- Design basis information,
- System information, and
- Valve information (either gate, globe, or butterfly).

The needed information in each category is discussed below.

Design Basis Information

Design basis information is accessed by clicking on the Design Basis tab. This section lists the design basis information that may be required, depending on the valve type and design basis conditions. PPM for Windows determines which information is required and only requests from the user information needed for the required thrust or torque prediction.

- Valve Size (inches) -- Used to determine the valve inlet diameter if the user chooses for PPM for Windows to use the default value for this parameter.
- Valve Pressure Class (lbs) -- Used to determine the valve inlet diameter if the user chooses for PPM for Windows to use the default value for this parameter.
- Actuator Type (motor-operated, air-operated or hydraulically-operated).
- Maximum Allowable Closing Thrust (lbs) -- This parameter is required for gate valve opening strokes only and is used to calculate the required cracking load. If the user does not want PPM for Windows to evaluate cracking load, a value of 0 should be entered.
- Actuator Opening Capability (lbs) -- This parameter is required for gate valve opening strokes only and is the actuator capability applicable at the point of disk unwedging. This value is compared to the predicted cracking load, which is based on the Maximum

Allowable Closing Thrust (see above). If the predicted cracking load is greater than the Actuator Opening Capability, PPM for Windows calculates a new Maximum Allowable Closing Thrust to assure margin for unwedging. If the user does not want PPM for Windows to compare the predicted cracking load to the Actuator Opening Capability, a value of 0 should be entered.

- Stroke Direction (open only, close only or open and close).
- DP (psid) -- Design basis DP for opening and closing strokes, as applicable.
- Upstream Pressure, psig -- Design basis upstream pressure for opening and closing strokes, as applicable.
- Flow Type (pumped flow or blowdown) -- Required for gate valves only.
- Fluid Medium (water, steam, or two-phase flow) -- Design basis fluid medium for opening and closing strokes, as applicable.
- Flow Rate (gpm) -- Design basis flow rate for opening and closing strokes, as applicable.
- Temperature (°F) -- For gate valves, minimum and maximum values are required. For globe and butterfly valves, only the minimum temperature is required.
- Steam/Mixture Mass Ratio -- Required for two-phase flow only; the steam quality in the supply tank is needed. If the fluid in the supply tank is saturated water, then a value of 0 should be input. If the SFM calculates that the flow flashes during the stroke and informs the user that two-phase flow should be specified as the fluid medium rather than subcooled water, a value of 0 should be input.
- System Method (ERM, Full SFM, SPM, BFM Steam Method or User-Input DP). See Section 6 for guidance on selecting a system method for various valve types.

System Information

If the SFM is used to calculate DP and upstream pressure as a function of stroke position using the ERM, Full SFM, or BFM Steam Method, information concerning the system in which the valve is installed is required. This information is divided into three categories:

- Pipe Information,
- Restrictor Information, and
- User-Input DP and Upstream Pressure.

Pipe Information

Pipe information is accessed by clicking on the Pipe Data tab. This section lists the pipe data that may be required, depending on the system method selected. PPM for Windows determines which information is required and only requests from the user information required for the required thrust or torque prediction.

- Equivalent Length (feet), Inside Diameter (inches) and Pipe Roughness (feet) -- If the ERM or BFM Steam methods are used, PPM for Windows calculates these parameters automatically, based on the design basis information. For the ERM, the user has the option of overriding the calculated values by checking the applicable boxes on the Pipe Data tab. If the Full SFM is used, the user needs to input this information. Determining these inputs requires the user to evaluate the system piping components for the various pipe segments and reduce these segments to an equivalent length of a given reference diameter with a given pipe roughness. Pipe roughness for commercial steel pipe is 0.00015 per Reference (3). Appendix C contains guidance for performing these evaluations.

- Pipe inertias (ft^{-1}) -- Values for piping upstream and downstream of the valve are required for MOV closing strokes with incompressible flow. For MOV opening strokes, AOVs and HOVs, values are not required. If pipe inertias are input for an opening stroke, the resulting prediction may not be bounding. Inertial effects are not calculated in the Full SFM since the Full SFM is used for compressible flow applications. Appendix C contains guidance for performing pipe inertia calculations.

Restrictor Information

Restrictor information is accessed by clicking on the Restrictors tab. Restrictors can be modeled for the Full SFM method only. Single restrictors can be modeled upstream of the valve and downstream of the valve. Allowable restrictors include a valve, an orifice, a nozzle and a venturi. The SFM evaluates whether flow is choked at the restrictors. If choking does occur, the effect of the calculation is to limit the flow through the valve and therefore the DP across the valve. Therefore, neglecting restrictors is conservative. If restrictors are modeled, the following information may be required.

- Type (none, orifice, nozzle or venturi or valve)

- Diameter (inches) -- If the restrictor is a valve, the valve inlet diameter must be input. If the restrictor is an orifice, a nozzle or a venturi, the minimum (or throat) diameter of the restrictor must be input.

- Beta Ratio -- Only required if the restrictor is an orifice, a nozzle, or a venturi. Beta ratio is calculated as follows:

Equation 5-1: $$\beta = \frac{d_r}{d_p}$$

d_r: restrictor minimum (or throat) diameter
d_p: pipe inside diameter

- Flow Coefficient (gpm/psi $^{1/2}$) -- If the restrictor is a valve, the flow coefficient for the valve, as positioned while the main valve is being stroked, must be input. The default information listed in Table 5-1 can be used for gate valves. For orifices, nozzles and venturis, the discharge coefficient, C_d, multiplied by the area thermal expansion factor, F_a, must be input. C_d is available from Reference (3), and F_a is available from Figure II-I-3 of Reference (8). Optionally, Values of C_v should be available from the vendor or may be provided on the valve or system drawing.

- Pressure Recovery Factor -- Pressure recovery factor, F_L, is required only if the restrictor is a valve with water or two-phase flow or if the restrictor is an orifice, a nozzle or a venturi. The default information listed in Table 5-1 can be used for gate valves. Values for F_L can be obtained from Reference (8) -- Figure II-III-4 for orifices, Figure II-III-18 for nozzles or Figure II-III-27 for venturis. A value of F_L may be available from the vendor or may be provided on the valve or system drawing.

- Inlet and Discharge Fitting Loss Coefficients -- Required only if the restrictor is a valve. Loss coefficients can be obtained for various valve types from Reference (3).

- Restrictor Pressure Drop Ratio Factor -- Pressure drop ratio factor, x_T, is required only if the restrictor is a valve with steam or two-phase flow. The default information listed in Table 5-1 can be used for gate valves. A value of x_T may be available from the vendor or may be provided on the valve or system drawing.

User-Input DP and Upstream Pressure

For gate and globe valves, PPM for Windows allows the user to input DP and upstream pressure as a function of stroke position, instead of using the SFM to calculate these parameters. This option is selected by choosing "user input DP" as the System Method on the Design Basis tab. User input DP and upstream pressure information is accessed by clicking on the User Input DP tab. Values are input in the form of data sets, i.e., a stroke position and corresponding DP and pressure values for that stroke position. A sufficient number of data sets should be entered to ensure that the variations in these parameters with stroke are accurately reflected. PPM for Windows allows the user to check this input by viewing plots of the input data versus stroke position. These plots can be used to verify that the input data accurately reflect the DP and upstream pressure behavior.

Valve Information

Gate Valves

Gate valve information required for a stem thrust prediction is contained on the Disk, Stem/Body, Other Valve and Flow Data tabs. Internal design information required by PPM for Windows to analyze a gate valve can generally be procured from the valve vendor. Most of the internal design information required for a prediction for solid and flexible wedge gate valves can

be procured using the specification in Appendix D. This specification contains requirements related to provision of this information and has been used to obtain design information for EPRI flow loop and *in situ* test valves. Other information should be available from plant documentation. The following vendors have been approved as suppliers of information per the specification in Appendix D:

- Flowserve (formerly Anchor/Darling and Borg-Warner)
- Crane (for Crane and Walworth valves)
- Powell
- Velan

It is expected that other gate valve vendors will also be able to provide this design information, but additional utility technical and QA interaction may be required to assure compliance with the specification. Note that, for some dimensions in the specification in Appendix D, tolerances are requested from the vendor. Some of these dimensions have been judged critical to the accuracy of the prediction. For these dimensions, the user must use a "worst case" value for performing design basis predictions. Section 6 contains guidance on selecting worst case values. The input forms in PPM for Windows also indicate in the field descriptions if a minimum or maximum value is required.

No significant reduction in the conservatism of PPM for Windows prediction is expected if the internal design information listed above is determined by disassembling the valve for inspection and measurement, rather than using design information obtained from the vendor. However, for gate valve applications that are determined to be unpredictable, confirmation that critical edges within the valve are not "sharp," as described in Section 7, will eliminate the prediction of unpredictability. If internal measurements are taken, refer to the specification in Appendix D for the internal design information required and the *In Situ* Test Guide for Motor-Operated Valves, Reference (4), for guidance on taking the required measurements. Where tolerances on dimensions are required in the specification in Appendix D, the accuracy of the measurement should be used to determine worst case values (e.g., considering the measuring instrument being used). The sections below discuss the valve information on each of the four valve information tabs.

Disk and Stem/Body Tabs

All of the information on these tabs can be taken directly from information obtained from the valve vendor using the specification in Appendix D, with the following exceptions.

Guide Materials

The applicability of PPM for Windows to valves with stainless steel guide rail and disk slot surfaces is limited. However, for some rail/slot material combinations not within the nominal applicability of the PPM, material substitutions have been shown to provide acceptable results.

The table below lists the material combinations that can be specified by the user for some actual material combinations that include stainless steel.

Actual Material Combination	Material Combination Specified By User
17-4 PH stainless steel on carbon steel	Stellite on carbon steel
17-4 PH stainless steel on stainless steel[(1)(2)]	Stellite on stainless steel[(2)]
stainless steel[*] on stainless steel[(1)(2)]	carbon steel on carbon steel[(2)(3)]

Notes:
1. Excluding 17-4 PH steel
2. this material substitution can only be done for fluid temperatures below 100E F
3. PPM for Windows will automatically make this substitution if stainless steel-on-stainless steel is specified as the guide material combination. If the design basis temperature is greater than 100°F, PPM for Windows will issue a warning that the results are "best available information."

Guide Rail Unsupported Length

Testing has shown that Velan gate valves are susceptible to plastic bending of the unsupported portion of the body guide rails. Velan gate valves have guide rails that are welded to the body with intermittent welds, typically leaving an unsupported length of guide rail at the bottom. The critical parameter for calculating guide rail bending stress, the guide rail unsupported length (dimension U in Appendix D and on the Stem/Body tab), is not well known by the manufacturer. The value provided by the manufacturer in accordance with the specification in Appendix D is an estimate and is not always accurate. If the user has a measured value for this dimension, the measured value can be input into PPM for Windows. Otherwise, the Disk Seating Surface OD (dimension D1 in Appendix D and on the Disk tab) must be input into PPM for Windows as the guide rail unsupported length to ensure a bounding prediction with respect to guide rail bending.

Other Valve Tab

The following information is listed on the Other Valve tab.

- External Torque Restraint?, Friction Conditions at Torque Reaction Surface, and Torque Arm Length (in) -- These parameters can be taken directly from information provided by the valve vendor on the specification in Appendix D.

- Friction Coefficients -- For a standard prediction, users should specify that default friction coefficients are used by clicking on the check box provided. If the user does not check this box, friction coefficients for the various sliding contacts within the gate valve must be entered. Friction coefficients are required for flat-on-flat, edge-on-flat and edge-on-edge contact at the disk seat/body seat and disk guide/body guide interfaces, and for the disk/stem interface. If the user chooses to inputs only some of the friction coefficients, values of zero should be input for the other friction coefficients. If a value of zero is entered, PPM for Windows will use the default values for that friction

coefficient. The user is responsible for the accuracy of any friction coefficients input in place of the default values.

- Disk Weight (lbs) -- If the stem is within 45° of vertical, values of zero can be entered for disk weight because the effect is included in the packing load input value. If the stem is horizontal and the pipe run is vertical (greater than 45E from horizontal), then a value of zero should be input. If the stem is horizontal and the pipe run is horizontal (less than or equal to 45E from horizontal), then a disk weight should be input. The user may select to have a disk weight calculated from disk dimensions by clicking on the check box next to the Disk Weight input box. In this case, a disk weight will be calculated by PPM for Windows using Equation 3-5 of Reference (1).

- Body Rail Misalignment, Positive Offset and Negative Offset -- Positive values indicate the guide rail or disk slot is closer to the downstream seat ring (for the rail misalignment) or disk seating surface (for the slot). Negative values indicate the guide rail or disk slot is closer to the upstream side. Two separate GATM predictions are made -- one with the positive offset specified and one with the negative offset specified. If the user has a measured value for this misalignment, the measured value can be input for both the positive and negative offsets. Otherwise, the user should click the check box next to this parameter to allow PPM for Windows to calculate the positive and negative misalignments. In this case, the misalignments are calculated using Equations 3-7, 3-8 and 3-9 of Reference (1).

  The positive offset prediction positions the guide rail in the downstream direction within the tolerance provided by the vendor at a location which is expected to have the highest potential for disk tipping. For this case, the disk will transition from the guide rail to the downstream seat ring early in a closure stroke. The negative offset prediction positions the guide rail as far upstream as possible based on the clearance between the disk slot and the body guide rail. For this case, the disk will transition from the guide rail to the seat ring at the very end of a closure stroke.

- Guide Yield Strength (psi) -- The information procured from the vendor using the specification in Appendix D includes the guide material. The minimum allowable yield strength for that material must be determined based on applicable material specifications. For many materials, the ASME Boiler and Pressure Vessel Code provides a minimum yield strength. The value used as input must be consistent with the temperature for the conditions being analyzed. This parameter is only important if the guide rail is a mechanically fixed rail (U-shaped) or for body guide rails welded to the valve body with an unsupported length (defined in Appendix D) greater than zero.

- Stem Orientation from Vertical (degrees) -- This parameter is used to determine the effect of disk and stem weight on valve behavior. The number of degrees from vertical should be entered.

- Full Stroke Length (in)-- For a standard calculation, the user will use default flow coefficient data. In this case, the user should click on the check box next to the Full Stroke Length input box to set this parameter equal to the Seat Ring Seating Surface ID

(dimension E2 on the Stem/Body tab). If the user inputs flow coefficient data for the valve, then the value input for Full Stroke Length must be the "hydraulic stroke length" of the valve. For example, for a closing stroke, the hydraulic stroke length is the distance the disk travels from fully open to flow isolation for a closing stroke.

- Stem Factor (ft-lbs/lb) -- This parameter is only used to calculate the sliding friction at the torque reaction surface. The stem factor is not used to evaluate actuator output thrust. The stem factor is the stem torque divided by the stem thrust and is calculated using Equation 3-10 of Reference (1). If the user clicks the "Calculate" check box for this parameter, PPM for Windows will calculate the Stem Factor. In this case, the user will need to enter the Stem Type (general purpose or stub ACME), the Stem Thread Pitch (in) and the Stem Thread Lead (in). A bounding value of 0.2 is used for the friction coefficient at the stem/stem nut interface, and the stem half thread angle is set to 14.5° for ACME threads. Although actual stem/stem nut friction is likely to be lower than 0.2, the torque influence for the gate valve thrust prediction is relatively minor, and use of 0.2 ensures that valve-specific justification of a lower friction coefficient is not required.

- Packing Load, Opening and Closing Strokes (lbs) -- Packing Load can be input separately for opening and closing strokes. The values input need to cover the frictional drag load exerted by the packing on the valve stem as well as any additional effects that contribute to thrust during a static stroke. Examples are thrust due to bent guide rails or eccentric valve stems. The value input into PPM for Windows as the packing load must be confirmed to be conservative through static testing.

  For valves with T-slots perpendicular to flow (typically Borg-Warner and Velan valves), both an opening and a closing static stroke must be performed and a packing load determined for each direction. The packing load value input into PPM for Windows must bound the higher of the two measured values -- opening packing load and closing packing load -- regardless of the design basis stroke direction of the valve. For other valves, the stroke direction for the static test must be the same as the design basis stroke direction.

  To verify the input value of packing load using static stroke test data, a plot of stem thrust during the static stroke must be reviewed. If the stem thrust plot for the static stroke shows a constant running load up to initial wedging (for closing strokes) or after disk cracking (for opening strokes), the packing load input into PPM for Windows must bound the measured running load (see Figure 5-1). If the stem thrust plot shows thrusts higher than the running load near the initial wedging point or just after disk cracking, there are phenomena beyond simple packing friction occurring during the valve stroke. The packing load input in this case must bound the maximum measured stem thrust up to and including initial wedging (for closing strokes) or after disk cracking (opening strokes). Any local effects near the fully open position (i.e., in the first 10% of a closure stroke) should be ignored. See Figure 5-1 for examples of static thrust data with constant running load and with thrust increases near the wedged position. Since packing load is modeled by the GATM as a constant stem thrust requirement throughout the valve stroke, the resulting design basis stem thrust prediction will be increased over the entire stroke by the value input for packing load rather than just at the local areas of maximum stem thrust observed during the static test. As a result, the design basis prediction would not

be expected to exactly match actual valve test data, although it is expected to bound the test data.

If valve packing adjustments are made, or if the valve has been disassembled, the packing load input into PPM for Windows must be re-verified to bound the measured packing load, as described above. For valves with T-slots perpendicular to flow, the packing load input value must also be re-verified to bound the measured packing load, as described above, if the bonnet is removed from the valve body.

- Inlet Diameter (in) -- The pipe diameter at the inlet to the valve. Annex A of ANSI B16.34 provides typical values for valves, based on valve size and pressure class. If the user clicks on the check box for this parameter, PPM for Windows will obtain a value for the Inlet Diameter from ANSI B16.34, based on the Valve Size and Valve Pressure Class input on the Design Basis tab.

- Stroke Time (seconds) -- A stroke time consistent with the valve full stroke is needed. If the user clicks on the "Calculate" check box next to this parameter, PPM for Windows will calculate the stroke time using Equation 3-11 of Reference (1). In this case, the user will need to specify the Actuator Overall Ratio, the Motor Speed (rpm) and the Stem Lead (in).

Flow Data Tab

The following information is listed on the Flow Data tab.

- Flow coefficient (gpm/psi$^{1/2}$), Pressure Drop Ratio Factor and Pressure Recovery Factor versus Stroke -- Default values are provided by PPM for Windows for gate valves. The default values are shown in Table 5-1. Optionally, the user can input this data in the form of data sets. A sufficient number of data sets should be entered to capture the general shape of the curve. PPM for Windows allows the user to view plots of the flow coefficient data entered. If the plots do not accurately reflect the actual shape of the curves, more data should be added in selected areas. Pressure recovery factor is only required for water and two-phase flow. Pressure drop ratio factor is only required for steam and two-phase flow. If the user provides this information, the stroke position must be normalized to the valve hydraulic stroke.

Globe Valves

Globe valve information required for a stem thrust prediction is contained on the Valve and Flow Data tabs. Internal design information required by PPM for Windows to analyze a globe valve can generally be procured from the valve vendor. Alternately, this information can be determined by disassembling the valve for inspection and measurement. Most of the internal design information required for a prediction for globe valves can be procured using the specification in Appendix E. This specification contains requirements related to provision of this information and has been used to obtain design information for EPRI flow loop and *in situ* test valves. Other information should be available from plant documentation.

The sections below discuss the valve information on the two valve information tabs.

Valve Tab

Most of the information on this tab can be taken directly from information obtained from the valve vendor using the specification in Appendix E. The following information is required.

- Stem Weight (lbs) -- This parameter can be neglected if the disk type is unbalanced and the design basis DP (in psi) is at least 70 times the nominal valve size (in inches). If a value is input, the weight of the entire length of the stem must be input.

- Disk Weight (lbs) -- This parameter can be neglected if the disk type is unbalanced and the design basis DP (in psi) is at least 70 times the nominal valve size (in inches).

- Disk Type (balanced or unbalanced) -- Balanced disk globe valves are designed such that the pressures above and below the disk are equalized for the majority of the valve stroke. Typically balanced disk globe valves either have ports in the globe or are a "cage" design that allows the pressures to be equalized. Unbalanced disk globe valves do not have pressure-equalizing ports, and the DP acts across the full seat or guide area.

- Stem Motion (rising stem or rising/rotating) -- Rising stem valves have a torque reaction device to prevent rotation of the stem. A rotating stem nut converts torque from the actuator into thrust in the stem. For rising/rotating stem valves, the stem nut (or bushing) is fixed, and the stem rotated in the valve body as the valve is stroked.

- Disk Alignment Ring OD (in) -- This parameter is only required for balanced disks or unbalanced disks that are guide-based. See Figure 5-2.

- Stem Diameter at Packing (in) – See Figure 5-3.

- Maximum Stellite Diameter on Disk (in) -- This parameter is the outside diameter of the Stellite seating surface on the valve disk, as shown in

- Lower Disk Alignment Ring Height (in) -- Required for balanced disk valves. If the disk has two alignment rings, the height of the lower ring must be input. If the disk has only one ring, the height of that one ring must be input. For "cage-type" designs, the height of the portion of the disk with the largest diameter (i.e. the portion that is in contact with the body as the disk is stroked) must be input.

- Full Stroke Length (in) -- This parameter is required if the disk is a balanced disk type. Unlike gate valves, the full mechanical stroke of the valve is required for globe valves.

- Torque Reaction Arm Mean Radius (in) -- This parameter are required if the stem is a rising only stem. See Figure 5-3.

- Flow Type (flow under or flow over) -- Flow over the disk indicates the flow through the pipe is in a direction to try to close the valve. Flow under indicates that the flow is in a direction to try to open the valve. Figure 5-4 illustrates each type of design.

- Stem Thread Lead (in) -- Required if the stem is a rising only stem. See

- Stem Thread Pitch (in) -- Required if the stem is a rising only stem. See

- Stem Thread Type -- general purpose or stub ACME.

- Stem Angle, θ, and Stem Angle, N (degrees) -- The angles θ and φ are shown in Figure 5-5. This information should be available from system piping drawings or by visual inspection. For Y-angle globe valves installed in a horizontal pipe run, θ can be estimated to be 45E. These angles are used to calculate the contribution of disk weight to the required stem thrust. This information is always required for balanced disk designs. If the disk is unbalanced, then the effect of stem weight can be considered negligible if the design basis DP (in psi) is at least 70 times the nominal valve size (in inches).

- Controlling Area (guide or seat) –

--Content Deleted, EPRI Proprietary Material--

- Packing Load, Opening Stroke and Closing Stroke (lbs) -- Packing Load can be input separately for opening and closing strokes. A value that bounds the measured axial component of the packing friction load is required. A static test must be performed to verify that the input value bounds the measured packing load. Globe valve designs have been encountered (typically balanced disk designs) which have increased thrust requirements at the nearly seated position because of the designed deformation of a rubber seal ring. Since this deformation is not modeled in the GLBM, the packing load input into PPM for Windows must account for this behavior. If the stem thrust plot from the static stroke shows an increase in thrust above the running load near the seated position, the packing load input into PPM for Windows must bound the maximum thrust achieved up to seating (closing stroke) or after unseating (opening stroke) during the static stroke.

- Inlet Diameter (in) -- The pipe diameter at the inlet to the valve. Annex A of ANSI B16.34 provides typical values for valves, based on valve size and pressure class. If the user clicks on the check box for this parameter, PPM for Windows will obtain a value for the Inlet Diameter from ANSI B16.34.

- Stroke Time (seconds) -- A stroke time consistent with the valve full stroke is needed. If the user clicks on the check box next to this parameter, PPM for Windows will calculate the stroke time using Equation 3-12 of Reference (1). In this case, the user should click on the "Calc" button and specify the Full Stroke Length (in), Overall Ratio, Motor Speed (rpm) and the Stem Lead (in).

Flow Data Tab

The following information is listed on the Flow Data tab.

- Flow Coefficient (gpm/psi$^{1/2}$), Pressure Drop Ratio Factor, and Pressure Recovery Factor versus Stroke -- This information may be available from the valve vendor for globe valves. This data is input in the form of data sets. A sufficient number of data sets should be entered to capture the general shape of the curve. PPM for Windows allows the user to view a plot of the data C_v entered. If the plot does not accurately reflect the actual shape of the curve, more data should be added in selected areas. Pressure recovery factor is only required for water and two-phase flow[1]. Pressure drop ratio factor is only required for steam and two-phase flow[1]. If the user provides this information, the stroke position must be normalized to the valve full stroke.

Butterfly Valves

Butterfly valve information required for a stem torque prediction is contained on the Valve Data (1) and Valve Data (2) tabs. Internal design information required by PPM for Windows to analyze a butterfly valve can generally be procured from the valve vendor. Alternately, this information can be determined by disassembling the valve for inspection and measurement. Measurement of the actual valve disk diameter, in particular, may reduce the conservatism of the prediction. Most of the internal design information required for a prediction for butterfly valves can be procured using the forms in Appendix F. Other information should be available from plant documentation.

The information on the two valve information tabs is listed below.

- Disk Type (symmetric, single offset or double offset) -- The sealing surface for a symmetric disk valve is in the same plane as the centerline of the stem. For single offset disks, the sealing surface is in a plane that is offset from the centerline of the stem. For double offset disk types, the centerline of the stem is offset from the plane of the sealing surface and from the centerline of the disk perpendicular to the direction of flow. This parameter should be available from valve assembly drawings or from the vendor. Note that the BFM predictions for double-offset valves have not been validated by comparison to test data.

---

[1]The GLBM is not applicable to two-phase flow.

- Disk Orientation (shaft upstream or shaft downstream) -- This parameter is required for single and double offset disks only. See Figure 5-7.

- Valve Inlet Diameter (in) -- The pipe diameter at the inlet to the valve. Annex A of ANSI B16.34 provides typical values for valves, based on valve size and pressure class. If the user clicks on the check box for this parameter, PPM for Windows will obtain a value for the Inlet Diameter from ANSI B16.34. Alternately, this parameter can be procured from the valve vendor using the forms in Appendix F.

- Disk Diameter (in) -- See Figure 5-6.

- Stem (Lateral) Offset (in) -- This parameter is the distance the valve stem is offset from the centerline of the disk, in the direction perpendicular to flow, with the disk in the closed position. Stem (Lateral) Offset is not applicable for symmetric and single offset disk types. See Figure 5-6.

- Stem Diameter at Bearing (in) -- See Figure 5-6.

- Disk Thickness (in) -- See Figure 5-6.

- Min Flow Resistance Coefficient, K_{vmin} -- This parameter is the flow resistance coefficient with the valve fully open. Max Flow Coefficient C_v is sometimes specified on the valve assembly drawing or can be obtained from the valve vendor using the forms in Appendix F. If the user checks the default check box for this parameter, PPM for Windows will calculate K_{vmin}. In this case, the user will need to input the Maximum Flow Coefficient, C_{vmax}, using Equation 3-13 of Reference (1), except as discussed below.

  Vendor values of C_v have been found non-conservative, in some cases, for high aspect ratio valves. Therefore, if the aspect ratio is 0.25 or greater, PPM for Windows will calculate K_{vmin} using Equation 3-14 or 3-15 of Reference (1). In this case, the user will need to input the Pipe Friction Factor, which can be obtained from Reference (3).

- Bearing Coefficient of Friction -- The user can input a value or specify that the default value be used. If the default value is selected, the user will need to input the Bearing Material (bronze or non-bronze metal) and the Fluid Condition (clean water or raw water). For bronze bearings in good working condition and in clean water or dry gas systems (systems that do not contain significant levels of particles), the default value is 0.25. For non-bronze metal bearings (e.g., 17-4 PH shafts on stainless steel bearings) and for valves installed in raw water systems (such as the service water system), the default value is 0.60. User input values of Bearing Coefficient of Friction can be used if justified by test data or other means.

- Seat Torque (ft-lbs) -- The user can input a value or specify that the default value be used. The BFM assumes that the value input by the user for seat torque also includes hub seal friction torque for symmetric disk valves. The default values are applicable to valves with interference-type seats (i.e., seats which form a seal by deformation of an

elastomeric component) in good working condition and which are maintained in accordance with manufacturer's recommendations. A value of 20 in-lbs/in^2 is used for the pressure-independent seat torque coefficient for valves in water service and a value of 36 in-lbs/in^2 is used for valves in dry gas service. If the valve has no seat or the seat is pressurized after valve closure, then the user can input a value of zero for the seat torque. If the valve has a pressure-energized seat, the user must provide a value for seat torque (see Reference 6).

For valves that are normally open, the seat torque calculated by the BFM is expected to provide a bounding prediction of the torque required to either seat or unseat the valve; however, if the seats are degraded, the valve may not be leak-tight. For valves that are normally closed, the user must verify through a static test that the predicted or input unseating torque bounds the value required to unseat (open) the valve, using the procedure described later in this section.

- Flow and Hydrodynamic Torque Coefficients -- Default data for Flow Coefficient, Hydrodynamic Torque Coefficient, Pressure Drop Ratio Factor and Pressure Recovery Factor are provided by PPM for Windows for butterfly valves. Optionally, this information may also be available from the valve vendor. A fully consistent set of flow and torque coefficients is required to obtain accurate torque predictions. Accordingly, the user must select either to use the defaults for all these parameters or to provide user-input values for all these parameters, with one exception.

  If user-input is selected, the user is responsible for the accuracy of the inputs and the subsequent effect on the accuracy of PPM for Windows predictions. The data is input in the form of data sets. A sufficient number of data sets should be entered to capture the general shape of the curves. PPM for Windows allows the user to view a plot of the C_v data entered. If the plot does not accurately reflect the actual shape of the C_v curve, add more data sets in selected areas. Pressure recovery factor is only required for water and two-phase[2] flow. Pressure drop ratio factor is only required for steam and two-phase flow[2]. If the user provides this information, the stroke position must be normalized to the valve full stroke using 90° as the full stroke.

- Upstream disturbance within 8 pipe diameters of valve? -- If there is an upstream disturbance (elbow, Tee or Wye) within 8 pipe diameters of the valve under analysis, the user should check this box.

- Proximity of in Pipe Diameters -- The number of nominal pipe diameters from the outlet of the upstream disturbance to the inlet of the valve under analysis. This parameter is only required if there is a disturbance within 8 pipe diameters of the valve. If this parameter is greater than 8 pipe diameters, then the effect of the upstream disturbance is ignored.

[2] The BFM is not applicable to two-phase flow upstream of the valve.

- Orientation-- This parameter is only required if there is an upstream disturbance within 8 pipe diameters of the valve. The BFM includes a model to account for an elbow installed upstream of the valve. Figure 5-8 shows the elbow configurations which can be selected -- velocity skew assists closing, assists opening, or is symmetric about the stem axis. If the upstream elbow orientation does not conform exactly to one of these configurations (e.g., the elbow is rotated 30E from the stem axis), then the two configurations which most closely match the actual configuration must be evaluated and the higher predicted stem torque selected. If the upstream disturbance is an elbow less than 90E, a Tee or a Wye, the elbow model can be used to bound those cases. The BFM is not applicable to other upstream disturbances (i.e., valves, pumps. etc.).

- Packing Torque, Opening Stroke and Closing Stroke (ft-lbs) -- Packing Torque can be input separately for opening and closing strokes. The BFM assumes the packing torque does not include hub seal friction torque for symmetric disk valves, i.e., the hub seal friction torque must be input separately. A design value of packing torque can typically be obtained from the packing vendor or valve vendor, or guidance in Reference (6) can be used to estimate a torque. A static test must be performed to verify that the sum of the input values for packing torque and hub seal friction torque bounds the measured running torque, as discussed later in this section.

- Hub Seal Friction Torque (ft-lbs) -- Hub seal friction torque results from friction generated at the hub seal of a symmetric disk around the stem, where it penetrates the valve body. This parameter is only required for symmetric disk valves. Some vendors may be able to provide a design value of hub seal friction torque. Alternatively, guidance in Reference (6) can be used to estimate a hub seal friction torque. A static test must be performed to verify that the sum of the input values for packing torque and hub seal friction torque bounds the measured running torque, as discussed later in this section.

- Stem angle from vertical (degrees) -- This parameter is the angle of the valve stem with respect to vertical. A value of 0° indicates the stem is vertical; a value of 90° indicates the stem is horizontal.

- Stroke time, seconds --A nominal stroke time is needed. The measured full stroke time can be used or the following equation can be used to calculate a nominal value. If the user clicks on the "Calculate" check box next to this parameter, PPM for Windows will calculate the stroke time using Equation 3-17 of Reference (1). In this case, the user will need to enter the Actuator Overall Ratio, Nominal Motor Speed (rpm), Stem Lead (in) and Quarter Turn Ratio.

Confirmation of Packing, Hub Seal Friction and Unseating Torques

The bounding nature of the values of packing torque and hub seal friction torque must be confirmed through static testing for both normally open and normally closed butterfly valves. In addition, for normally closed butterfly valves, the unseating torque must be confirmed through static testing. The following approach is required:

1. Perform a static stroke in the design basis direction while measuring stem torque.

2. Verify that the sum of the input values of packing torque and hub seal friction torque bounds the running torque (disk angles above 10E open) measured during the static test.

3. For normally closed valves, calculate seat torque, ft-lbs, using the equation below.

Equation 5-2: $$\tau = \frac{1}{12} A d^2$$

A: Pressure independent seat torque coefficient (in-lbs/in^2)
-- use 20 for water and 36 for air or dry gas
d: Disk Diameter (in)

Verify that the sum of the seat torque calculated above plus the input value of packing torque bounds the measured unseating torque from a static opening test (maximum torque for disk angles less than 10E open). If the calculated seat torque plus the input value of packing torque bounds the measured unseating torque, then the BFM should be allowed to calculate the seat torque (rather than the user specifying a value). If not, the valve seats may be degraded. In this case, the measured unseating torque plus a user-specified margin (minus the input value of packing load) must be input by the user as the seat torque, rather than allowing the BFM to calculate this parameter.

Table 5-1. Default Flow Data for Gate Valves

--Content Deleted, EPRI Proprietary Material—

Note (1): Flow Coefficient (C_v) is normalized to the square of the seat ring inside diameter. The default set of flow coefficients is calculated internally in PPM for Windows by multiplying the values in the above table by D_{SR}^2. D_{SR} is the same as dimension E3 in Appendix D.

--Content Deleted, EPRI Proprietary Material--

Figure 5-1. Determination of Gate Valve Packing Load from Static Test Data

--Content Deleted, EPRI Proprietary Material--

Figure 5-2. Globe Valve Disk Information

--Content Deleted, EPRI Proprietary Material--

Figure 5-3. Gate and Globe Valve Stem and Torque Arm Dimensions

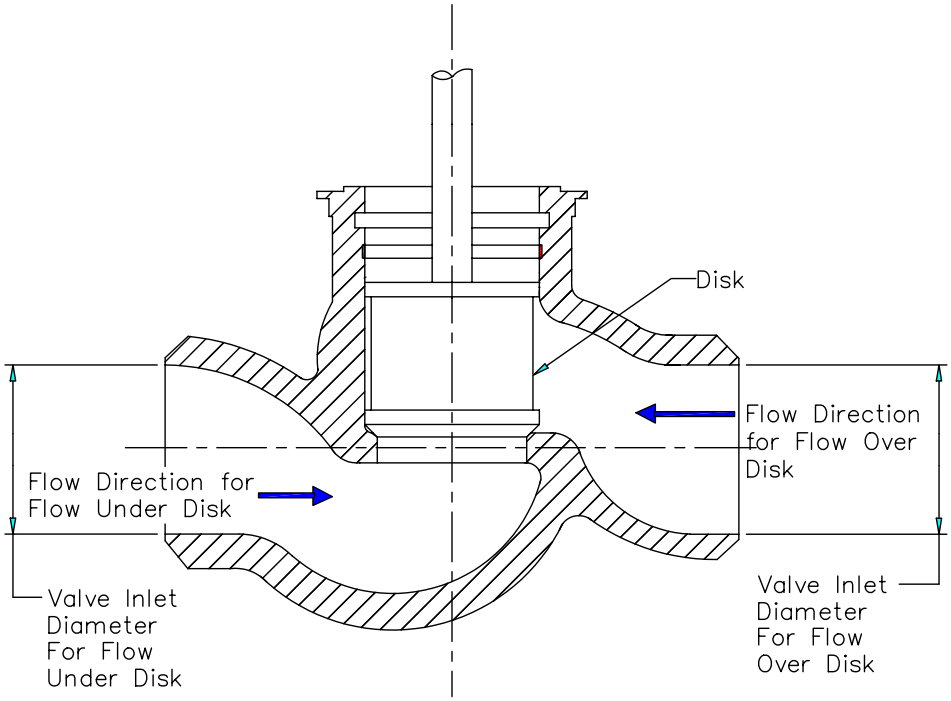

Figure 5-4. Globe Valve Flow Types

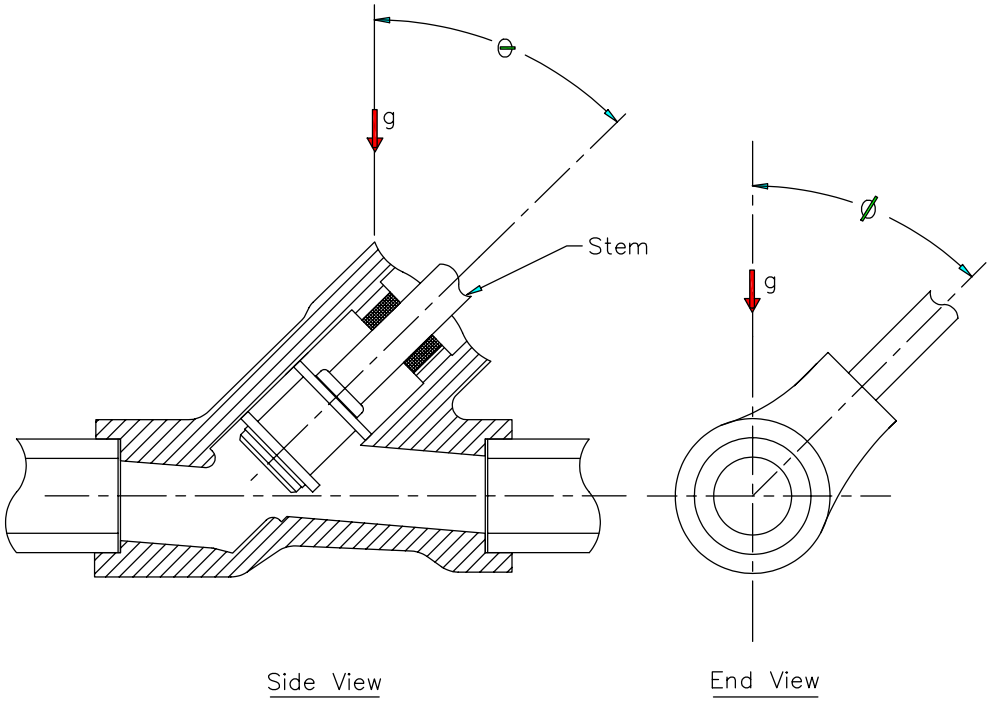

Figure 5-5. Globe Valve Orientation Angles

--Content Deleted, EPRI Proprietary Material--

Figure 5-6. Butterfly Valve Dimensions

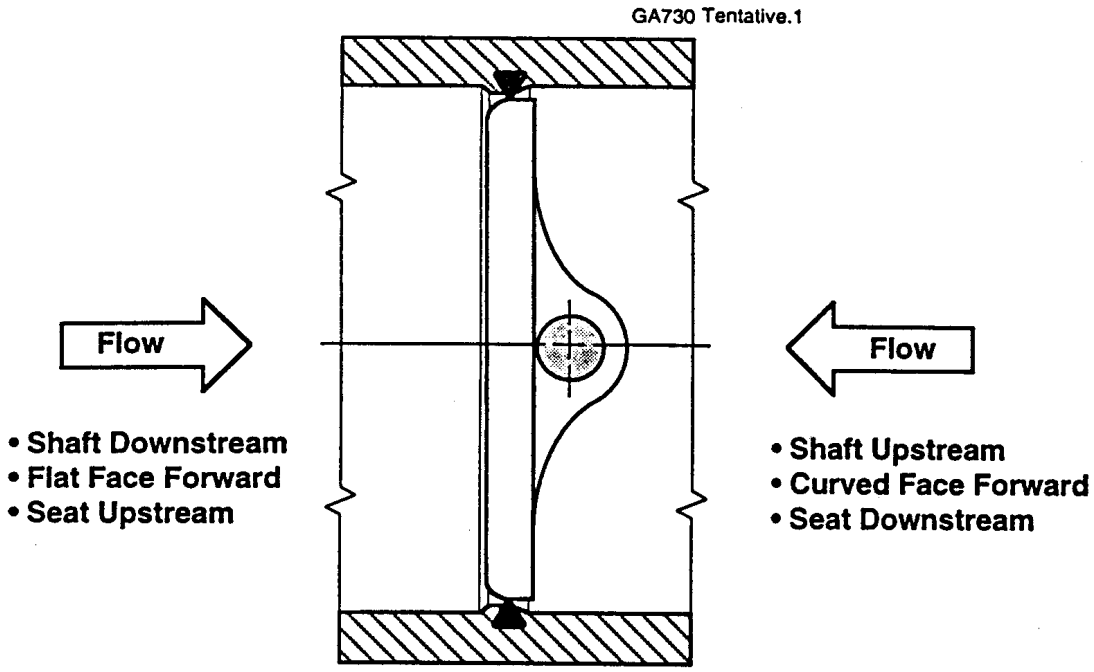

Figure 5-7. Butterfly Valve Disk Orientations

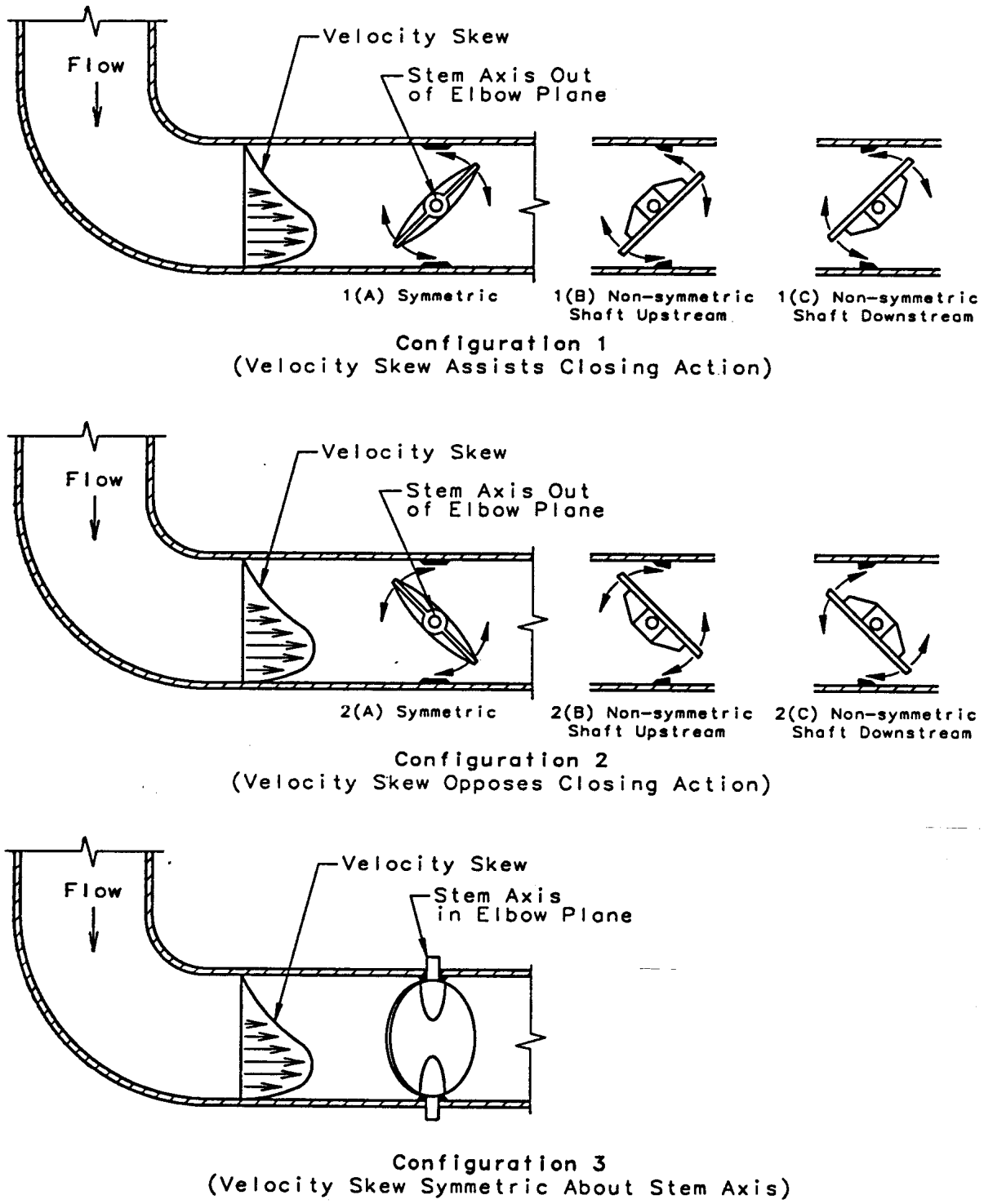

Figure 5-8. Butterfly Valve Elbow Model Configurations

6
IMPLEMENTATION GUIDANCE

Applicability Evaluation

When all program inputs are determined, an applicability evaluation needs to be performed to verify that PPM for Windows is applicable for evaluating required thrust or torque. The tables on the Applicability form (accessed by clicking on the Applicability button on the button bar) list the applicability requirements for use of PPM for Windows. The user should evaluate the valve application being evaluated against these criteria.

The applicability evaluation checks to ensure that the characteristics of the valve application are consistent with the assumptions made during development of the models and the range of validation of the various models. The accuracy of the DOS versions of the PPM demonstrated in Reference (2) is based on assessment within the ranges specified by the applicability criteria. For some parameters or conditions, the applicability of the Methodology could possibly be expanded, particularly those parameters that are limited by the availability of test data. However, the user must provide justification for exceeding the applicability ranges provided, for example by validating PPM for Windows predictions against applicable test data. In addition to meeting the specific applicability criteria, users must ensure that an adequate valve maintenance program is followed to ensure that the thrust/torque predictions made by the model remain valid over time.

The NRC has indicated in the SE that if a licensee uses the EPRI Methodology to predict thrust for a valve of a design not tested in the EPRI Program, the licensee will be expected to show, by comparison of model predictions to in-house or other test data, that the Methodology provides bounding predictions for that gate valve design. Gate valve designs tested in the EPRI Program include valves manufactured by Anchor/Darling, Borg-Warner, Crane, Pacific, Powell, Velan and Walworth.

Running a Prediction of Required Thrust/Torque

Once the Methodology has been verified to be applicable to the valve application and all inputs have been determined, a prediction can be run to determine the required thrust or torque. There are four basic calculational software "models" within PPM for Windows, each with a specific purpose. The System Flow Model (SFM) takes as input information concerning the system in which the valve is installed (e.g., piping, pump, tanks, etc.) and calculates the DP, upstream pressure and flow for the valve as a function of stroke position. The GATM takes as input the DP and upstream pressure calculated by the SFM, as well as design information for a gate valve, and calculates the required thrust to operate the valve as a function of stroke position and evaluates the potential for internal damage which may render the valve/flow condition combination unpredictable. The GLBM takes as input design information for the valve and the

maximum DP and calculates the required thrust to operate a globe valve. Although the GLBM has the capability to accept DP and upstream pressure calculated by the SFM as a function of stroke position, a simplified analysis method (the Single Point Method) is recommended for globe valves, eliminating the need to run the SFM. The Butterfly Valve Model (BFM) takes as input the DP and flow characteristics calculated by the SFM and design information for a butterfly valve and calculates the required torque to operate the valve as a function of stroke position (disk angle). PPM for Windows executes these modules and transfers data between modules automatically when the user requests a prediction. Different analysis approaches are used within the EPRI Methodology, depending on the type of valve being analyzed (i.e., gate, globe or butterfly). A description of these approaches is given below.

The remainder of this section describes how to perform predictions using PPM for Windows for gate, globe, and butterfly valves. It is expected that, for many valves, the user will not have any test data (except for static test data) and will perform a "standard analysis," as described below. However, there are options for some valve types that make use of additional valve test data to potentially improve the accuracy (decrease the conservatism) of the analysis. These options are also described in this section.

System Flow Model

The SFM determines the DP and upstream pressure as a function of stroke position for the valve application. Optionally, the user can specify the DP and upstream pressure for gate and globe valves. The SFM is typically used for gate and butterfly valves but not for globe valves. There are several methods of implementing the SFM, depending on the valve type and the design basis conditions, as described below.

- Equivalent Resistance Method (ERM) -- a simplified approach for predicting DP and upstream pressure for incompressible flow; does not require the user to review system isometric drawings (unless water inertia is a concern) or calculate piping equivalent lengths. Recommended for gate and butterfly valves as long as the fluid medium is water and the fluid doesn't flash at any time during the stroke, for the full range of possible temperatures.

- Full system flow model (Full SFM) -- required for gate and globe valves for compressible flow (e.g., steam flow or fluid flow where flashing occurs at the maximum design basis temperature). Requires the user to review system isometric drawings and calculate piping equivalent lengths.

- BFM steam method (BFM Steam) -- a simplified approach required for butterfly valves with compressible flow; does not require the user to review system isometric drawings or calculate piping equivalent lengths.

The following system methods do not use the SFM.

- User-input DP -- an optional approach for gate and globe valves that allows the user to specify the DP and upstream pressure as a function of stroke position, rather than using the SFM to predict these parameters.

- Single point method (SPM) -- a simplified approach for evaluating globe valves that uses the "user-input DP" software option; recommended for all globe valve applications.

The table below shows the various system methods and indicates when they can or should be used.

Valve Type	Available System Methods for:	
	Incompressible Flow	**Compressible Flow**
Gate Valve	ERM (recommended) Full SFM User-input DP	Full SFM (recommended) User-input DP
Globe Valve	SPM (recommended) ERM Full SFM User-input DP	SPM (recommended)* Full SFM* User-input DP*
Butterfly Valve	ERM (recommended) Full SFM	BFM Steam (required)

* PPM for Windows is not applicable for globe valves with compressible flow. However, the software can be implemented under these conditions and a thrust prediction (which cannot be used as a design standard) obtained.

SFM Output

After a prediction has been made, the output of the SFM is incorporated into the prediction report along with the results from the valve modules. The Summary of Results section lists the calculated DP at various points of interest, as discussed in Section 7 (for example, at theoretical flow isolation and initial disk wedging for gate valve closing strokes). In addition, the Tables section includes a table of predicted DP and flow as a function of stroke position.

Whenever the SFM is used, the user should confirm that the predicted DP after flow isolation (closing strokes) or before flow initiation (opening strokes), upstream pressure and flow rate are consistent with the corresponding design basis values for the valve. The predicted values can be determined by viewing (on screen) or printing plots of DP, upstream pressure and flow versus stroke position. If the predicted values do not agree with the design basis values within a few percent, then the inputs related to the system configuration should be reviewed for accuracy.

Gate Valves

Overview

For gate valves, both the maximum DP (design basis DP) and the manner in which the DP builds up as the valve is stroked are important. The valve disk can bear on different surfaces and can be in different orientations (i.e., tipped or flat) depending on the magnitude of the DP at each stroke position. Therefore, knowledge of the DP and upstream pressure at each stroke position is required. The Methodology therefore requires use of the SFM to calculate DP and upstream

pressure for gate valves. Default values of the valve flow coefficient (C_V), pressure drop ratio factor (x_T) and pressure recovery factor (F_L) are provided within PPM for Windows for gate valves. For subcooled water applications, the ERM has been shown to provide a good estimate of the build-up of DP as a function of stroke position. This method is recommended for gate valves in subcooled water service, rather than the Full SFM Method. Inputs related to the system/flow conditions required for the ERM include the design basis DP, the design basis upstream pressure, the design basis flow rate (with the valve fully open) and the fluid temperature. Additionally, if inertial effects need to be considered, pipe inertia is required. A screening criterion is provided in Appendix C for all valve types to determine whether a particular valve application is susceptible to water inertial effects.

The GATM requires certain valve dimensions and materials as input. The specification in Appendix D can be used to obtain the required information from the valve vendor. For all gate valves within the scope of PPM for Windows, default friction coefficients for all sliding surfaces are provided. These friction coefficients are bounding values, and it is recognized that many gate valves will have friction coefficients less than the default values. Therefore, the user has the option of determining the actual disk-to-seat friction coefficient for a particular gate valve, by performing a test at less than design basis conditions, and using that friction coefficient in the analysis.

Model Inputs

For a standard analysis, the user must select to use the default data for flow coefficient, pressure recovery factor and pressure drop ratio factor. If the user provides this data, then the user is responsible for justifying the accuracy of the inputs and the subsequent effect on the accuracy of the prediction. Unless a disk seat-to-body seat flat-on-flat friction coefficient was determined from valve-specific testing, the user must select to use default friction coefficients. If a friction coefficient is available from testing, then that value can be input as the disk seat-to-body seat flat-on-flat friction coefficient, and all other friction coefficients must be set equal to zero, so that default values will be used.

PPM for Windows makes two separate GATM predictions for gate valves -- one with a positive guide rail offset and one with a negative guide rail offset. The greater of the maximum predicted stem thrusts for these cases is listed in the prediction report as the required stem thrust.

The specification in Appendix D should be used to procure the required gate valve internal design information, unless valve measurements are available. Tolerances will be provided by the vendor for some dimensions, and some of these dimensions have been judged critical to the prediction. For a standard design basis calculation, a "worst case" value for each of the critical dimensions, determined by combining the nominal dimension with the design tolerance to achieve a minimum or maximum design value, must be used as input. The critical dimensions are listed below, along with whether the minimum value (calculated by subtracting the design tolerance from the nominal value) or the maximum value (calculated by adding the design tolerance to the nominal value) must be used as a worst case value. Nominal values should be used for all other dimensions obtained using the specification in Appendix D.

Critical Gate Valve Dimensions for Which the **Minimum** Value Must Be Used

Disk seat edge chamfer dimension, D5
Disk seat edge radius, R1
Disk guide bottom edge chamfer dimension, D3
Disk guide bottom edge radius, R2
Body guide rail width, G2
Body seat ring edge chamfer dimension, D7
Body seat ring edge radius, R3

Critical Gate Valve Dimensions for Which the **Maximum** Value Must Be Used

Disk seat edge chamfer angle, δ1
Disk guide slot width, G1
Disk guide bottom edge chamfer angle, δ2
Seat ring seat seating surface OD, D2
Body seat ring edge chamfer angle, δ3

Use of the System Flow Model for Gate Valves

A standard gate valve analysis includes use of the SFM (either the ERM or the Full SFM, as required) to calculate the DP and upstream pressure as a function of stroke position. If the User-DP option is used, the user is responsible for the accuracy of the inputs and the subsequent effect on the accuracy of the prediction. Whenever the SFM is used, the user should confirm that the predicted DP after flow isolation (closing strokes) or before flow initiation (opening strokes), upstream pressure and flow rate are consistent with the corresponding design basis values for the valve.

Potential for Guide Galling

Certain gate valve applications are designated unpredictable based on design features and design basis conditions. If a gate valve application meets all of the criteria listed below, the stroke is designated unpredictable, and the required thrust cannot be predicted.

Disk guide slot surface material:	carbon steel*
Body guide rail surface material:	carbon steel*
Minimum slot/rail clearance**:	**--Content Deleted, EPRI Proprietary Material--**
Design basis fluid medium:	water at 200EF or greater or steam
Design basis flow rate:	blowdown

* **--Content Deleted, EPRI Proprietary Material--**

** **--Content Deleted, EPRI Proprietary Material--**

PPM for Windows performs this evaluation and indicates if an application is unpredictable due to potential guide galling.

Summary of GATM Output

The GATM calculates required stem thrust at every 1% of stroke from fully open to fully closed (initial wedging) and at each stroke position makes an assessment of whether internal damage may occur. In some cases, the predicted damage may be such that a reliable prediction of stem thrust cannot be made (i.e., the stroke is unpredictable). See the discussion on GATM warnings in Section 7 to determine appropriate actions if the stroke is determined to be unpredictable. Warning messages generated by the GATM are listed in the Summary of Results section of the prediction report along with the stroke position at which the warning occurred. The prediction report also includes a table of predicted stem thrusts at every 1% of stroke.

If the valve application is determined by the GATM to be unpredictable (i.e., a Type 1 warning is issued), predicted thrusts are not provided in the Summary of Results section. In addition, if an unrecoverable calculation error occurs during GATM execution, predicted thrusts are not provided. In these cases, the user should review the table of predicted stem thrusts to view the predicted stem thrusts at stroke positions where predictions were (or could be) made.

Note that PPM for Windows calculates required stem thrust to reach the point of initial wedging for closing strokes. It does not include calculation of a sealing load or cracking load. Reference (5) contains guidance on calculating required sealing loads for gate valves. The desired sealing load should be added to the required stem thrust predicted by PPM for Windows for valve closures.

Cracking Load for Gate Valve Opening Strokes

PPM for Windows evaluates the required "cracking" load (the stem thrust required to pull the disk out of the seat rings from the wedged position) for gate valve opening strokes using Equation 5-3 of Reference (1). Comparison to EPRI test data has shown these predictions to be bounding for the case where the valve is closed under static conditions and opened under DP conditions. The equation uses a conservative value of the disk-to-seat coefficient of friction. Potential pressure locking and thermal binding effects are not considered.

The cracking load is a function of the valve closure thrust. PPM for Windows uses the Maximum Allowable Closing Thrust, which is input by the user, as the valve closure thrust. The resulting cracking load prediction therefore covers the range of allowable closure thrusts. If the calculated cracking load exceeds the Actuator Opening Capability input by the user, PPM for Windows calculates a new Maximum Allowable Closure Thrust that assures margin for cracking.

The NRC has stated in the SE that licensees using this cracking load prediction will be expected to compare results of the equation with their own unwedging data to provide further confidence that the equation is an adequate predictor of unwedging thrust.

User Input of DP and Upstream Pressure for Gate Valves

The user may choose to input DP and upstream pressure as a function of stroke position rather than allowing the SFM to calculate these parameters. This option is not expected to result in a reduction in the conservatism of the prediction but may be helpful in evaluating in-plant data. If this option is used, the user is responsible for the accuracy of the inputs and the subsequent effect on the accuracy of the prediction.

User Input of Flow Data for Gate Valves

PPM for Windows provides default data for flow coefficient, pressure drop ratio factor and pressure recovery factor for gate valves. This information can also be provided by the user as user-input data, for example, if data is available from the vendor, from other literature or from valve testing. This option is not expected to result in a reduction in the conservatism of the prediction. If this option is used, then the user is responsible for the accuracy of the inputs and the subsequent effect on the accuracy of the prediction.

User Input of Disk-to-Seat Friction Coefficient for Gate Valves

The GATM includes a friction algorithm for determining default coefficients of friction at various sliding surfaces within a gate valve. The algorithm is based primarily on results of friction separate effects testing conducted as part of the EPRI MOV Program. The default values provided by the friction algorithm are based on extensive testing of various materials under the loading conditions that can occur within a gate valve (e.g., edge-on-edge contact). Inputs to the algorithm include the materials of the sliding parts, the contact load and the contact geometry (e.g., edge-on-flat contact or flat-on-flat contact). The user has the option to use default friction values from the friction algorithm or to provide the disk seat-to-body seat flat-on-flat coefficient as a user input. A value that can be used for a design basis prediction can be determined from DP or static testing. Note that values of zero must be input for all other friction coefficients so that default values will be used by PPM for Windows.

Use of disk-to-seat coefficient of friction values determined from valve-specific testing could potentially have a significant effect on the conservatism in the prediction only for closing strokes. On opening strokes, guide friction becomes limiting as the seat friction coefficient is reduced. Therefore, for opening strokes, *in situ* testing to determine the disk-to-seat friction coefficient will result in minimal, if any, reduction in the conservatism of the prediction. Sections 8 and 9 of Reference (1) provide guidance on performing dynamic valve tests and evaluating the results to determine a friction coefficient for input into PPM for Windows.

Note that if the user provides the disk-to-seat friction coefficient, the results of the prediction are applicable only to the valve at the time of the test used to determine the friction coefficient. The user is responsible for accounting for any potential changes to the valve which may occur and which may affect the disk-to-seat friction (e.g., through a trending program). The default friction coefficients within PPM for Windows bound the disk-to-seat friction at any time, provided the valve is properly maintained.

Globe Valves

Overview

For globe valves, the maximum predicted stem thrust will always occur either at seating or just prior to seating as long as the maximum DP occurs when the valve is in the fully closed position. Therefore, a prediction of the build-up of DP as a function of stroke position using the SFM is not required. Instead, the SPM is used for globe valves. When the SPM is selected, PPM for Windows sets the DP and upstream pressure equal to the design basis DP and upstream pressure for the entire stroke. Consequently, no inputs related to the system configuration, the fluid conditions or the valve flow characteristics (C_V, x_T or F_L) are required. A specification is included (Appendix E) to assist the user in obtaining from the valve vendor the internal design information required for a globe valve prediction.

Model Inputs

Nominal values for globe valve dimensions should be used.

Use of the System Flow Model for Globe Valves

For globe valves, the maximum required stem thrust during the stroke occurs either at seating or just before seating, as long as the DP is at its highest value at this point. Therefore, the SFM is not required to calculate the build-up of DP. Instead, the Single Point Method (SPM), which requires only the design basis DP and upstream pressure is used. Inputs to the technical modules are defined automatically by PPM for Windows when the SPM option is selected, based on the design basis conditions input by the user. In the SPM method, the valve DP and upstream pressure are set to the design basis DP and upstream pressure (adjusted for water inertia effects, as applicable) for the entire stroke. **–Content Deleted, EPRI Proprietary Material--** therefore, when using the SPM, the summary tables in the Summary of Results section in the prediction report contain meaningful values for stem thrust at seating (or unseating) and for maximum stem thrust. Since such predictions are valid only at or near seating, the table of predicted stem thrust and the plots of output parameters versus stroke position are not meaningful and should not be used for comparison to actual test data.

If the water inertia screening method (see Appendix C) indicates that the valve may be susceptible to water inertial effects, the DP and upstream pressure values for closing strokes must include the effect of water inertia. If the user inputs values of pipe inertia (I), PPM for Windows uses the equations below to calculate the DP increase, $)DP_{WI}$, and the upstream pressure increase, $)P_{WI}$, due to water inertia. These equations are based on Equation 5-4 of Reference (1) and assume the DP builds up only in the last 5% of the stroke. $)DP_{WI}$ and $)P_{WI}$ are then added to the design basis DP and upstream pressure, respectively, for closing strokes.

Equation 6-1: **--Content Deleted, EPRI Proprietary Material--**

Equation 6-2: **--Content Deleted, EPRI Proprietary Material--**

I_{up}: Pipe inertia for upstream piping, ft^{-1}
I_{down}: Pipe inertia for downstream piping, ft^{-1}
Q: Design basis flow rate, gpm
t_{stroke}: Valve stroke time, seconds

If a more accurate calculation of water inertia is desired, a Full SFM or ERM system evaluation can be performed for globe valves. Values for the valve flow coefficient would then be required. Whenever the SFM is used, the user should confirm that the predicted DP after flow isolation (closing strokes) or before flow initiation (opening strokes), upstream pressure and flow rate are consistent with the corresponding design basis values for the valve.

Summary of GLBM Output

The results from a globe valve prediction are summarized in the Summary of Results section of the prediction report. Note that since the SPM is typically used for globe valves, the values of stroke position in the tables in the prediction report are not meaningful.

Required Torque For Self-Actuating Globe Valve Strokes

For globe valve closing strokes with flow over the seat and opening strokes with flow under the seat, the DP load assists disk motion. If the DP load is larger than the sum of the packing and stem rejections loads, the stroke is "self-actuating", i.e., no stem thrust is required to stroke the valve near the fully closed position. However, at the fully open position, where the DP is essentially zero, some stem thrust may be required. PPM for Windows determines, based on the GLBM output, if a stroke is self-actuating. For self-actuating strokes, PPM for Windows sets the required thrust to the packing load for opening strokes and to the packing plus stem rejection loads for closing strokes.

In addition, if the stem nut is self-locking, stem torque is required to rotate the stem nut and allow the flow to move the disk for a self-actuating stroke. PPM for Windows calculates the required stem torque, To_{req}, using Equation 5-5 of Reference (1). To assure a conservative result, a bounding value of friction coefficient at the stem/stem nut interface (0.2) is used. Note that Equation 5-5 of Reference (1) may indicate that the stem nut interface is non-self-locking. In this case, PPM for Windows will indicate that the required torque is zero.

Note that the GLBM calculates the maximum stem thrust required to reach the seat (closing strokes) or to pull away from the seat (opening strokes). It does not include calculation of a sealing load for closure strokes. Reference (5) contains guidance on required sealing loads for globe valves. The desired sealing load should be added to the required stem thrust predicted at disk se

Butterfly Valves

Overview

For butterfly valves, the maximum hydrodynamic torque will normally occur at a partially open disk position. Therefore, the manner in which DP changes with stroke is important, and the Methodology requires use of the SFM for butterfly valves. As with gate valves, for subcooled water applications, the ERM is recommended. For compressible flow applications, another simplified method called the BFM Steam Method is required.

Model Inputs

For butterfly valves, the user should use the default data for flow coefficient, torque coefficient, pressure recovery factor and pressure drop ratio factor unless the BFM Steam Method is used. Otherwise, if the user provides this information, then the user is responsible for the accuracy of the input and the subsequent effect on the accuracy of the prediction. Nominal values of valve dimensions should be used. Any compressible fluid medium must be modeled as steam, and the BFM Steam Method, as described below, must be used.

Use of the System Flow Model for Butterfly Valves

For butterfly valves, the SFM must be used. For single-phase compressible flow (e.g., steam or air), the BFM Steam Method must be used. The BFM Steam Method applies the full design basis DP for the entire stroke length to ensure that the peak hydrodynamic torque is conservatively predicted. For all other applications, either the Full SFM Method or the ERM must be used. Whenever the SFM is used, the user should confirm that the predicted DP after flow isolation (closing strokes) or before flow initiation (opening strokes), upstream pressure and flow rate are consistent with the corresponding design basis values for the valve.

Summary of BFM Output

The BFM calculates total predicted dynamic torque (labeled "Total Torque" in the prediction report) and its components and other predicted torques that can be used to determine valve operability and survivability. For the BFM Steam Method, torque predictions are made at 0E, 5E, 77E and 90E. For other implementation methods (which use the default flow and torque coefficients) torque predictions are made at every 1E of disk rotation from fully open (90E) to fully closed (seating). The results are summarized in the Summary of Results section of the prediction report.

In addition, detailed output tables and plots are available. The tables contain values at each 1E stroke position for all torque load components (see Reference 12) as well as a "Total Torque" value. Note that for the BFM Steam Method, the tables contain values at 0E, 5E, 77E and 90E only. The total torque value is the algebraic sum of all active torque components at each stroke position including the hydrodynamic torque component regardless of whether the flow assists or resists disk motion. The total torque can also be plotted. The total torque in the detailed tables and as plotted should be considered a "best estimate" torque prediction that is not necessarily

representative of a design basis torque. Design basis torque values must always be obtained from the Summary of Results section.

User Input of Flow Data for Butterfly Valves

PPM for Windows provides default data for flow coefficient, pressure drop ratio factor, pressure recovery factor and torque coefficient for butterfly valves. Optionally, this information can also be provided by the user as user-input data, for example, if data is available from the vendor, from other literature or from valve testing. If this option is used, then the user is responsible for the accuracy of the inputs and the subsequent effect on the accuracy of the prediction. If the user chooses to manually input data for one of these parameters, the user must also manually input data for the other parameters.

7
EVALUATING RESULTS

Prediction Report

Once a prediction is run, a prediction report is generated. Users can access the prediction report by clicking on the Report button on the button bar. The prediction report is designed to be a stand-alone summary of the prediction. It contains all inputs used for the prediction and the results of the prediction. Each page of the report has a header that lists the Valve ID number, the Valve type (gate, globe or butterfly), the name and version number of software and the date and time the prediction was performed.

The prediction report has the following sections

- Summary of Results
- Calculated Values
- Inputs
- Tables

The Summary of Results section summarizes the results of the prediction, including the predicted thrust or torque and any warning messages generated. Specific contents of this section are discussed in the sections below for each valve type. The Calculated Values section lists key parameters calculated as part of the prediction. Specific contents of this section are listed later in this section. The Inputs section lists all inputs used to generate the prediction to allow traceability of the results. The Tables section contains tables of predicted DP and flow versus stroke position and predicted stem thrust or torque versus stroke position.

Summary of Results Section Contents

Gate Valves

The Summary of Results section list the following results for gate valves.

- Whether each stroke is determined to be predictable or unpredictable -- either due to potential sharp edge damage (guide or seat) or guide galling.
- Maximum required stem thrust. For each stroke direction, the higher of the required thrust from the positive offset run and the required thrust from the negative offset run is

shown. Note for Borg-Warner valves: When using default friction coefficients in making thrust predictions for Borg-Warner gate valves, the maximum required stem thrust must be multiplied by 1.05 to obtain the design basis thrust. PPM for Windows does not apply this multiplier; it must be applied by the user. No such multiplier is required on unwedging thrust or if user-input friction coefficient is used.

- The predicted unwedging thrust.
- If the predicted unwedging (cracking) load exceeds the opening actuator capability, the recommended maximum allowable closing thrust is listed.
- A table of predicted DP and stem thrust at various selected stroke positions (see below). Results are shown for the positive and negative offset runs separately.
- Any warnings or messages generated by the prediction. For each stroke direction, warnings from both the positive offset run and negative offset run are shown.

The table of predicted DP and stem thrust includes values of stroke position, DP and predicted stem thrust for the points listed below. Separate tables are provided for the positive and negative offset runs.

<u>Closing Strokes</u>

- At running
- At theoretical flow isolation -- The GATM assumes that flow is theoretically isolated when the outside diameter of the disk seating surface crosses the inside diameter of the seat ring seating surface at the leading (bottom) edge of the disk.
- At initial disk wedging
- At the point of maximum predicted stem thrust prior to initial wedging.

The larger of the stem thrust at initial wedging and the maximum stem thrust prior to initial wedging is the required stem thrust. This larger value must also be used to ensure that flow isolation is achieved.

<u>Opening Strokes</u>

- At running
- At theoretical flow initiation -- The GATM assumes that flow is theoretically initiated when the outside diameter of the disk seating surface crosses the inside diameter of the seat ring seating surface at the leading (bottom) edge of the disk.
- At unwedging of the disk (immediately after cracking)

- At the point of maximum predicted stem thrust after unwedging.

Globe Valves

The Summary of Results section list the following results for globe valves.

- Whether each stroke (opening and closing) is self-actuating.
- Maximum required stem thrust. The minimum of the value obtained from the GLBM prediction and the packing load is specified for opening strokes. The minimum of the value obtained from the GLBM prediction and the sum of the packing load and stem rejection load is specified for opening strokes.
- Required stem torque for self-actuating strokes.
- A table of predicted DP and stem thrust at various key stroke positions (see below).
- Any warnings or messages generated by the prediction.

The table of predicted DP and stem thrust includes values of stroke position, DP and predicted stem thrust for the following points:

<u>Closing Strokes</u>

- At running
- At disk seating (which also corresponds to flow isolation)
- At the point of maximum predicted stem thrust prior to disk seating.

For globe valve closing strokes that are not self-actuating (flow under disk), the larger of the stem thrust at seating and the maximum stem thrust prior to seating is the required stem thrust. Globe valves with flow over the disk are typically self-closing, resulting in a maximum stem thrust that is tensile (negative). In this case, a required stem torque is calculated from the maximum predicted stem thrust prior to seating.

<u>Opening Strokes</u>

- At running
- At disk unseating (also corresponds to flow initiation)
- At the point of maximum predicted stem thrust after disk unseating.

For globe valve opening strokes that are not self-actuating (flow over disk), the larger of the stem thrust at unseating and the maximum stem thrust after unseating is the required stem thrust. Globe valves with flow under the disk are typically self-opening, resulting in a maximum stem

thrust that is compressive (negative). In this case, a required stem torque is calculated from the maximum predicted stem thrust after unseating.

Butterfly Valves

The Summary of Results section list the following results for butterfly valves.

- Maximum required stem torque.
- A table of predicted DP and stem torque at various key stroke positions (see below).
- Any warnings or messages generated by the prediction.

The table of predicted DP and stem torque includes the following results:

- Required Total Dynamic Torque -- The maximum total dynamic torque required to rotate the disk in the specified direction (closing or opening). This torque does not take credit for hydrodynamic torque when that component assists disk rotation in the specified direction. For example, in a closing stroke with shaft upstream orientation (which exhibits self-closing hydrodynamic torque), the maximum required total dynamic torque is equal to the maximum friction torque throughout the stroke.
- Required Total Seating/Unseating Torque -- The maximum required torque to seat (closing stroke) or unseat (opening stroke) the disk.
- Required Actuation Torque -- The motive torque to be provided by the actuator to rotate the disk in the specified stroke direction. This torque is the larger of the required total dynamic torque and the required total seating/unseating torque. This torque determines the minimum actuator output torque requirements and is the design basis required stem torque.
- Maximum Transmitted Torque -- The maximum stem torque predicted by the model. Its magnitude is equal to the larger of the required actuation torque and the peak hydrodynamic torque. This torque can be used to determine if the torque rating of the actuator will be exceeded and to evaluate the structural adequacy of the stem and its connections to the actuator and to the disk. The maximum transmitted torque is based on the torque analysis of the valve only and does not consider the actual actuator output which may include inertial overshoot and excess torque caused by limit switch failure.

Calculated Values Section Content

The Calculated Values section contains the following parameters, if they are calculated by PPM for Windows.

- Upstream pipe inertia, for closing strokes that use the ERM.
- Downstream pipe inertia, for closing strokes that use the ERM.

- Critical pipe inertia, for closing strokes that use the ERM.
- DP and upstream pressure values used in the prediction, for globe valves that use the SPM. The values used may be different from the design basis values because of calculated water inertia effects.
- Equivalent length of piping, if the ERM is used.
- Body guide rail misalignment, positive offset, for gate valves.
- Body guide rail misalignment, negative offset, for gate valves.
- Minimum guide rail clearance, for gate valves.
- Stem factor, for gate valves.
- Stroke time, for gate valves.
- Disk weight, for gate valves.
- Inlet diameter
- Stroke length, for gate valves
- Minimum flow resistance coefficient, for butterfly valves.
- Equivalent valve factor, calculated using standard industry equations. Note that for gate valves, valve factor is always calculated using the seat diameter (D6), even for guide-based valves.

Output Plots

The user also has the option of viewing or printing plots of certain output parameters. Sections 4 and 8 provide instructions on viewing the list of available plots and on producing hardcopy plots. Each plot lists the Valve ID number, the Valve type (gate, globe or butterfly), the name and version number of software and the date and time the prediction was performed. This information allows plots to be identified with specific prediction reports.

Reviewing the Prediction Report

The first step in evaluating the results of a prediction is to review the prediction report for warning messages. The Summary of Results section prints out all warnings generated for a specific prediction. Some warnings are associated with a specific stroke position and some with the entire stroke. See Appendix A for guidance on addressing the various GATM warnings.

Options If Margin is Inadequate

If the desired thrust/torque margin is not achieved based on the results of the prediction, the optional approaches discussed below may increase the margin. In addition, the EPRI MOV Margin Improvement Guide, Reference (13), contains guidance on increasing available margin.

Gate Valve Dimensions. Measuring gate valve dimensions required for a prediction has been shown to result in a relatively small reduction in prediction conservatism. However, as discussed below under GATM warning messages, confirmation/modification of edge dimensions can eliminate unpredictability.

Analysis Options to Increase Margin. For gate valves, the option most likely to reduce the predicted stem thrust is user-input of disk-to-seat flat-on-flat friction coefficient, determined from testing under less than design basis conditions. This method has been shown potentially effective for valve closing strokes but not for opening strokes. Sections 8 and 9 of Reference (1) provide guidance on performing these tests and evaluating the results to determine a friction coefficient for input. Reference (2) provides the results of assessment of this option, including the expected decrease in the conservatism of the prediction when using friction coefficients determined from:

- Low DP data (33 - 50% of design basis DP)
- Medium DP data (67 - 75% DP)
- Hydropump opening stroke data, and
- Static data.

EPRI flow loop test data were used for this assessment.

Note that if the user provides the disk-to-seat friction coefficient, the results of the prediction are applicable only to the valve at the time of the test used to determine the friction coefficient. The user is responsible for accounting for any potential changes to the valve which may occur and which may affect the disk-to-seat friction (e.g., through a trending program). The default friction coefficients within PPM for Windows bound the disk-to-seat friction at any time, provided the valve is properly maintained.

GATM Warning Messages

The GATM can generate two types of warning messages -- Type 1 (indicated by a "WARNING TYPE 1" preceding the warning message) and Type 2 (indicated by a "WARNING TYPE 2"). Table A3 lists the potential warning messages, summarizes the meaning of each message and lists the actions that the user should take if a message is generated. Three types of messages that require particular attention are guide or seat sharp edge damage warnings, guide galling warnings and guide rail plastic bending warnings. These messages are discussed in the sections below.

Unpredictable Behavior Due to Sharp Guide or Seat Edges

The GATM can generate either Type 1 or Type 2 guide or seat damage warnings. These warnings are generated at specific stroke positions.

A Type 2 damage warning indicates that the valve may experience damage during the stroke (e.g., to the guide or seat surfaces); however, a reliable friction coefficient can be determined from the available data in the friction algorithm. If a Type 2 warning is generated for a particular run, then the prediction can be considered a reliable, bounding prediction.

A Type 1 damage warning indicates that substantial valve internal damage may occur during the stroke due to sharp Stellite edges and a reliable friction coefficient cannot be determined (i.e., valve behavior is unpredictable). If any stroke position within a given valve stroke has a Type 1 warning, then the thrust predictions for all subsequent stroke positions are unreliable and extremely high stem thrust requirements may exist.

For gate valve strokes that are determined to be unpredictable due to sharp edges, options are available for the user. One option is to perform a test under design basis DP and flow conditions to verify operability of the valve. The other option is to re-analyze the valve application with selected dimensions changed to see if the unpredictability can be eliminated. If it can be eliminated, then the actual valve can be modified to conform to the configuration that gives predictable behavior. Note that prior to modification of valve internals or removal of material (e.g., edge chamfering), an evaluation should be performed to ensure that structural limitations are not exceeded.

Three edges in a gate valve affect unpredictability due to sharp edges. The disk seating surface OD and the seat ring seating surface ID are important for predicting Type 1 seat damage. The disk guide bottom edge is important for predicting Type 1 guide damage if the disk guide slot surface material is Stellite and the body guide rail surface material is carbon or stainless steel. The criteria listed below are used to determine whether contact involving these edges is "sharp edge" contact or "dull edge" contact. Sharp edge contact can result in Type 1 guide or seat damage predictions if the contact forces are high enough.

--Content Deleted, EPRI Proprietary Material--

If Type 1 *seat* damage is predicted, then the input values for the seat edge dimensions should be increased such that they are not considered sharp edges and the valve re-evaluated. If Type 1

guide damage is predicted, then the input value for the disk guide bottom edge dimension should be increased such that it is not considered a sharp edge and the valve re-evaluated.

Based on a comparison of vendor-supplied disk OD and seat ring ID edge dimensions and measured edge dimensions for the EPRI flow loop test valves, the vendor-supplied data is typically accurate enough that a valve inspection would not likely show a dramatic difference for these edges. Therefore, simply measuring the actual edge dimensions probably will likely not justify dull edge contact rather than sharp edge contact. It is likely that the valve will have to be modified to create a chamfer or radius that results in dull-edge contact. Therefore, provisions should be made for modifying the edges, if necessary, while the valve is disassembled for inspection. For the disk guide bottom edge, vendor-supplied data is not typically accurate, and measurements are more likely to indicate that the edges are not sharp.

It should be recognized that for valves in pumped flow systems, the potential for valve internal damage that would lead to unpredictability is extremely low. For such valves, a prediction indicating possible unpredictable behavior means that if the valve actually has sharp edges and worst-case guide rail positioning within the valve such damage would be expected. A prediction of unpredictability for such valves can be used to screen valves that may require additional attention.

Unpredictability Due to Guide Rail Galling

An indication of unpredictability due to potential guide galling means that severe galling of the guide surfaces may prevent the valve from performing its required function. This warning is given if the guide materials are carbon steel-on-carbon steel, the flow is hot water or steam blowdown and the total guide clearance less than 1/16-inch. This warning can be eliminated by modifying the valve so that the total clearance is at least 1/16-inch. However, the preferred approach is to install a new disk with Stellite guide faces. Before performing either modification, the valve should be analyzed with the modified configuration to see if predictable behavior is achieved using PPM for Windows.

--Content Deleted, EPRI Proprietary Material--

A prediction of unpredictability for valves in blowdown service does not indicate that substantial valve damage and high required stem thrusts <u>will</u> occur, but that they <u>might</u> occur. However, due to the severe loads imposed on valves in blowdown service, a prediction of unpredictability should be considered a significant indicator of potentially high thrust requirements.

Guide Rail Bending Warnings

For guide rails that have unsupported regions, the GATM calculates the bending stress due to the DP load on the disk. A Type 2 guide bending warning indicates that guide rail plastic deformation (bending) is possible. This message is generated for each stroke position where the loads are sufficient to cause plastic guide rail deformation. The effect of a previously bent guide rail can be measured in a static stroke and incorporated into the packing load input (See Section 5). Therefore, if the valve has been stroked under design basis conditions, the prediction can be considered bounding, provided the packing load was verified to bound the maximum stem thrust measured during a static stroke of the valve performed after the valve was stroked under design basis conditions. If the valve has not been stroked under design basis conditions, then testing has shown that the stem thrust predicted by PPM for Windows will only ensure that the valve isolates flow for a closing stroke. The disk may then wedge between the guide rail and the downstream seat ring rather than between the two seat rings. If a DP is subsequently applied in the reverse direction, flow may not be sealed off in the reverse direction. For opening strokes, if the valve has not been stroked under design basis conditions, the stem thrust prediction can be considered bounding to fully stroke the valve since the guide rail would not be expected to bend until flow is initiated.

8
PPM FOR WINDOWS REFERENCE GUIDE

This section provides a description of each menu item, input form and output form in PPM for Windows. For guidance on how to perform specific tasks within PPM for Windows (for example, how to perform a batch prediction) refer to Section 4.

File Menu

New

Allows the user to create a new Valve file. When this option is selected, the user is prompted for the type of Valve file to be created -- gate, globe or butterfly valve. PPM for Windows then automatically creates the appropriate forms for the valve type selected.

Open

Allows the user to open a previously saved Valve file. When this option is selected, the user is prompted for the file to be opened using a standard Windows open dialogue box. PPM for Windows then opens the appropriate file.

Close

Closes the active Valve file. If changes have been made to the file or a prediction has been run since the file was last saved, the user is prompted to save the file before the file is closed.

Convert

Executes a "wizard" that allows users to convert PPM Version 1.0 or Version 2.0 .mov files to Version 3.0 .vlv files.

Save

Saves the active Valve file using the existing file name. If the active file does not have a file name (i.e., it has not been saved before), the user is prompted for a file name using a standard Windows save dialogue box.

Save As

Allows the user to save the active Valve file using a name other than the existing file name. When this option is selected, the user is prompted for a file name using a standard Windows save dialogue box.

Save All

Saves all open Valve files using the existing file names. If any Valve files do not have file names, the user is prompted for the file names using a standard Windows save dialogue box.

Print preview

Displays a full-screen preview of the user-defined report.

Print

Allows the user to print inputs and outputs from a prediction. The following sub-options are provided.

- Valve description -- prints the valve description for the active valve file.
- Input forms -- prints the input forms for the active Valve file.
- References -- prints the list of references for the active Valve file.
- Applicability table-- prints the applicability table for the active Valve file.
- Prediction report -- prints the prediction report for the active Valve file.
- Plots -- prints a plot of input or output information. When this option is selected, the plots selected under the User Defined Report option of the Edit menu are printed. Some plots can only be printed after a prediction has been run.
- Comments and recommendations -- prints the list of comments and recommendations for the active Valve file.
- User-defined report -- prints a user-defined report, as defined by the user in the Edit/User-defined report option.

Exit

Exits PPM for Windows. If changes have been made to any open Valve files (including running a prediction) since the file was last saved, the user is prompted to save each file before exiting PPM for Windows.

Edit Menu

Comments

Allows the user to input standard comments that can be inserted into the Comments list of any Valve file. PPM for Windows has the following standard comments pre-loaded.

- This calculation evaluates valve unwedging requirements using the EPRI MOV Methods. The NRC has stated in its Safety Evaluation that licensees using this equation will be expected to compare results of the equation with their own unwedging data to provide further confidence that the equation is an adequate predictor of unwedging thrust.

- Guide rail bending is predicted for the opening stroke; however, the prediction is valid.

- Guide rail bending is predicted for the closing stroke -- if the valve has never been stroked under design basis conditions, the valve may not fully wedge (i.e., valve may isolate flow only). The disk may wedge between the guide rail and the downstream seat ring rather than between the two seat rings. If a DP is subsequently applied in the reverse direction, flow may not be sealed off in the reverse direction.

- Potential galling of the guide surfaces is predicted for the following strokes -- open/close/both; however, the prediction is valid.

- The maximum allowable closing thrust for static set-up testing is used to calculate the required cracking load.

- Stainless steel-on-stainless steel guide materials are modeled as carbon steel-on-carbon steel. The results are valid since the maximum design basis temperature is 100°F or less.

- The PPM is not applicable to this valve because the guide materials are stainless steel-on-stainless steel and the maximum design basis temperature is greater than 100°F. The guide materials are modeled as carbon steel-on-carbon steel, and the results are considered "best available information."

- The PPM is not applicable to this valve because the disk is balanced and flow is over the seat. The results are considered "best available information."

The Comments form has the following controls.

- Add button -- adds a blank comment that can be edited by the user. The user can also assign a comment number.

- Delete button -- deletes the currently highlighted comment from the standard comments list.

- Close button -- closes the Comments form.

- Cancel button -- closes the Comments form without saving changes made by the user.

Recommendations

Allows the user to input standard recommendations that can be inserted into the recommendations list of any Valve file. PPM for Windows has the following standard recommendations pre-loaded.

- **--Content Deleted, EPRI Proprietary Material—**

The Recommendations form has the following controls.

- Add button -- adds a blank recommendation that can be edited by the user. The user can also assign a recommendation number.
- Delete button -- deletes the currently highlighted recommendation from the standard recommendations list.
- Close button -- closes the Recommendations form.
- Cancel button-- closes the Recommendations form without saving changes made by the user.

User-defined report

Allows the user to define a report that can include any of the following items.

- Valve description
- Input forms
- References
- Applicability table
- Prediction report
- Plots (any of the available plots)
- Comments and recommendations

The user-defined report form has the following controls.

- Check boxes for input forms and output -- check these boxes to include the listed items in the user-defined report.
- OK button -- saves the specified contents of the user-defined report and closes the user-defined report form.
- Cancel button -- closes the user-defined report form without saving changes made by the user.

Prediction Menu

Run

Runs a prediction for the active Valve file based on the inputs specified by the user. The results of the prediction are displayed in the prediction report.

Batch

Allows the user to run predictions for a group of Valve files in "batch" mode. When a batch run is performed, required thrust/torque predictions are performed for each file. To view the results of the batch predictions, the user must load the Valve file. The batch form has the following controls.

- Save As button-- Allows the user to save the current set of Valve files list using a filename other than the current filename. Batch files have a .bat file extension.
- Save button-- Saves the current Valve files using the existing filename. Batch files have a .bat file extension.
- Load button - Loads a previously saved batch file.

- Add button -- Allows the user to add a Valve file to the current Valve files list. The user is prompted to select a Valve file.
- Delete button -- Deletes a Valve file from the Valve files list. Before clicking on the button, the user must click on the Valve file to be deleted.
- Run button -- Executes required thrust/torque predictions for the Valve files list.
- Close button -- Exits the batch feature.
- Print user defined report check box -- If this box is checked, the user defined reports for each Valve File are printed out after the predictions are run.

Insert Menu

Comment

Allows the user to insert a standard comment, as defined by the user. This option is only active if the comments list is active.

Recommendation

Allows the user to insert a standard recommendation, as defined by the user. This option in only active if the recommendations list is active.

Window Menu

Cascade

Arranges the open Valve files in a cascading arrangement.

Tile Horizontal

Arranges the open Valve files in a horizontal tiled arrangement.

Tile Vertical

Arranges the open Valve files in a vertical tiled arrangement.

Arrange Icons

Arranges the minimized icons along the bottom of the active window.

Open Valve File List

Allows the user to select a Valve file from a list of open Valve files. When a Valve file is selected by the user, the file selected becomes the active Valve file.

Help Menu

Displays a list of PPM for Windows help topics.

Description Input Form

The Description input form is accessed by clicking on the Description button on the button bar. The Description input form allows the user to input the following information. This information is optional and does not affect the required thrust or torque prediction.

- Plant Name and Unit
- Valve ID -- Number used by plant to uniquely identify the valve.
- Valve Vendor -- Name of the manufacturer of the valve.
- Vendor Drawing Number -- Manufacturer's assembly drawing number for the valve.
- Vendor Serial Number -- Manufacturer's serial number, if available.
- Valve Description -- A description of the valve, e.g., PORV Block Valve or RHR Pump Suction Isolation Valve
- Design Basis Scenario(s) -- A description of the scenarios in which the valve is required to stroke open and closed and the conditions for these scenarios.

Inputs Input Form

The Inputs input form is accessed by clicking on the Inputs button on the button bar. Section 5 provides guidance for determining values for these inputs.

References Input Form

The References input form is accessed by clicking on the References button on the button bar. This form allows the user to create a list of references used to obtain inputs for the Valve file. The user can add, delete or edit references. When references are added, they are automatically numbered with the next available number. When references are deleted, the reference list is renumbered appropriately. When reference numbers are automatically changed (e.g., if a reference is deleted), parameter references are automatically updated. Any references to a deleted reference number are deleted. The References input form has the following forms and controls.

- Reference list -- List of references for the active Valve file
- Reference details -- Displays the text for the currently highlighted reference
- Add button -- Adds a blank reference that can be edited by the user.

- Delete button -- Deletes the currently highlighted reference from the list.

Comments and Recommendations Input Form

The Comments and Recommendations input form is accessed by clicking on the Comments and Recommendations button on the button bar. This form allows the user to create a list of comments and a list of recommendations for a given Valve file. The user can add, delete or edit comments and recommendations. When comments and recommendations are added, they are automatically numbered with the next available comment or recommendation number. When they are deleted, the lists are renumbered appropriately. The Comments and Recommendations form has the following features and controls.

- Select category menu -- Allows the user to select whether the list of comments or the list of recommendations for the active Valve file is displayed.

- Comments/Recommendations list -- List of comments/recommendations for the active Valve file

- Comments/Recommendations description -- Displays the text for the currently highlighted comment/recommendation.

- Add button -- Adds a blank comment/recommendation that can be edited by the user.

- Insert button -- Allows the user to insert a standard comment/recommendation into the list of comments/recommendations.

- Delete button -- Deletes the currently highlighted comment/recommendation from the list.

Applicability Input Form

The Applicability input form is accessed by clicking on the Applicability button on the button bar. This form allows the user to evaluate the valve application against the applicability requirements for the valve type being evaluated, which are shown in Section 4 of Reference (1). Columns are provided to allow the user to specify whether the valve being evaluated does or does not meet each requirement and to provide a reference or basis for each. The Applicability form has the following controls.

- Applicability table -- Lists the applicability requirements based on the valve type.

- Pull-down menus -- Allows the user to specify that the valve application being evaluated meets (choose "Yes") or does not meet (choose "No") the requirement, or that the requirement is not applicable for the valve ("N/A").

- References or Bases column -- Allows the user to input a reference or describe the basis for indicating whether the valve application meets or doesn't meet the applicability requirement.

Prediction Report Output Form

The Report output form is accessed by clicking on the Report button on the button bar. Section 7 discusses the prediction report and how to interpret the prediction results.

Plots Output Form

The Plots output form is accessed by clicking on the Plots button on the button bar. The user can display and print the plots listed below.

- Valve flow coefficient (gpm/psi$^{1/2}$) versus Stroke position (%) or Disk angle (degrees) (input). Applicable for ERM and Full SFM.

- Valve flow (gpm or lbs/hour) versus Stroke position (%) or Disk angle (degrees) (output). Applicable for ERM, Full SFM and BFM Steam. Separate plots are provided for the opening and closing strokes.

- Upstream pressure (psig) versus Stroke position (%) or Disk angle (degrees) (output for ERM, Full SFM and BFM Steam; input for SPM and User-input DP). Separate plots are provided for the opening and closing strokes.

- Valve DP (psi) versus Stroke position (%) or Disk angle (degrees) (output for ERM, Full SFM and BFM Steam; input for SPM and User-input DP). Separate plots are provided for the opening and closing strokes.

- Stem thrust (lbs) versus Stroke position (%) or Stem torque (ft-lbs) versus Disk angle (degrees) (output for all system methods). Separate plots are provided for the opening and closing strokes. For gate valves, separate plots are provided for the positive and negative offset runs.

- Valve DP (psi) versus Flow (gpm or lbs/hour) (output). Applicable for ERM, Full SFM and BFM Steam. Separate plots are provided for the opening and closing strokes.

Plots are viewed by clicking on the Plots button on the button bar, then selecting the desired plot from the Available Plots menu. The following buttons are provided on the plot form.

- Print - Prints the currently displayed plot

- Copy -- Copies the currently displayed plot to the Windows clipboard, from which it can be pasted into other documents.

- Save -- Saves the currently displayed plot as a bitmap file.

A
WARNING AND ERROR MESSAGES

The attached tables list warning and error messages that may be generated by PPM for Windows and recommended actions to address these messages.

--Content Deleted, EPRI Proprietary Material--

B
BENCHMARK FILE REPORTS

To verify proper installation and operation of PPM for Windows, the three benchmark files provided with the program should be opened and predictions run for each. A prediction report should then be printed out for each and compared to the attached reports.

--Content Deleted, EPRI Proprietary Material--

C
GUIDANCE FOR DEVELOPING SYSTEM INPUTS

Using PPM for Windows may require that the user perform system modeling to develop inputs. This appendix provides guidance for performing this modeling.

Pipe Equivalent Lengths

Note that if a piping run has segments of different diameters, combining them as discussed below assumes that the friction factor is a constant value independent of the piping diameter. Also, note that the local losses are expressed as an equivalent L/D, and pipe roughnesses other than that for clean, commercial steel need to be accounted for in developing the model inputs.

Combining Pipes and Fittings in Series

Pipes and fittings that are connected in series can be represented by a single pipe of equivalent length, L, and reference diameter, D, using the following equation.

Equation C-1:

$$L = \sum_{i}^{n} L_i \left(\frac{D}{D_i} \right)^5$$

The diameter, D, for the representative pipe should be chosen as close to the diameter of the element that has the largest effect on the flow. Typically, this is the element with the longest equivalent length and the smallest flow area. Once the diameter is selected, the corresponding equivalent length can be determined from Equation C-1 above.

Combining Pipes and Fittings in Parallel

Pipes and fittings that are connected in parallel may be represented by a single pipe of equivalent length, L, and reference diameter, D, using the following equation.

Equation C-2:

$$L = \frac{1}{\left[\sum_{i}^{n} \left[\frac{1}{L_i} \left(\frac{D_i}{D} \right)^5 \right]^{\frac{1}{2}} \right]^2}$$

L: equivalent length of the pipe (fitting, valve, etc.), ft
D: reference diameter of the pipe (fitting, valve, etc), ft
i: index for individual component
n: total number of components to be combined

As above, the diameter, D, of the representative pipe should be chosen as close to the diameter of the element that has the largest effect on the flow.

The equivalent lengths for individual elements can be determined from handbooks, manuals, textbooks, or from test data. Often times the equivalent length is given in terms of a loss coefficient K. If this is the case the equivalent length L can be determined using the following relationship.

Equation C-3: $$L = \frac{K\,D}{f}$$

L: equivalent length of the component, ft
K: loss coefficient
D: diameter, ft
f: turbulent friction factor

References (3) and (7) are two popular sources for determining the loss coefficients.

The loss coefficient K can also be determined from test data, assuming that it is available. For this, one needs to know the flow, pressure drop, and the fluid density. The relationship for calculating the loss coefficient, K, is shown below.

Equation C-4: $$K = 288\, g_c\, \Delta P\, \frac{\rho A^2}{w^2}$$

g_c: 32.2 lbm-ft/lbf-sec^2
Δp: pressure drop, psi
f: turbulent friction factor
D: diameter, ft
A: flow area, ft^2
w: flow rate, lbm/sec
ρ: fluid density, lbm/ft^3

The equations given above provide the bases to reduce a complex flow system into a manageable configuration so that it can be analyzed using the model. Although the equations are derived from first principles, their application to real life problems involves approximations due to the uncertainties in friction factor and the loss coefficients. The error introduced in these approximations depends on the particular problem analyzed and can be best determined by sensitivity studies.

Fluid Inertia

Most valve applications can be approximated as steady flow problems since the valve stroke times are long and the flow acceleration/deceleration effects are small. However, when inertia is

significant, the model will account for the acceleration/deceleration effects. In such cases, the model requires the user to input the "pipe inertia," I, defined as follows.

Equation C-5: $$I = \frac{L}{A}$$

L: pipe length, ft
A: flow area, ft^2

This definition is applicable to a single pipe. When there are multiple pipes, the inertia term is calculated from the equation below.

For n pipes in series:

Equation C-6: $$I = \sum_{i=1}^{n} I_i = \sum_{i=1}^{n} \frac{L_i}{A_i}$$

For n pipes in parallel:

Equation C-7: $$I = \left[\sum_{i=1}^{n} \frac{1}{L_i} \right]^{-1} = \left[\sum_{i=1}^{n} \frac{A_i}{L_i} \right]^{-1}$$

In summing these terms, "n" should extend from the valve to the nearest point at which the pressure is relatively constant, such as a tank, a header or a large pipe.

If water inertia is determined not to be a concern for the valve under analysis, a value of 0 for these parameters can be input to neglect the effects of water inertia. The screening criterion shown below can be used to determine if water inertia is a concern for a particular valve application. This criterion assumes the DP builds up over the last 5% of stroke, and considers water inertia a concern if the DP due to water inertia is greater than 5% of the design basis DP.

Water inertia <u>is</u> a concern if:

Equation C-8: $$I_{up} + I_{down} \geq I_{crit}$$

I_{up}: Total upstream pipe inertia, ft^{-1}
I_{down}: Total downstream pipe inertia, ft^{-1}
I_{crit}: Critical pipe inertia, ft^{-1}, calculated using equation below.

Equation C-9: $$I_{crit} = 83.4\left(\frac{DP\ t_{stroke}}{Q}\right)$$

DP: Valve design basis DP, psid
t_{stroke}: Valve stroke time, seconds
Q: Valve design basis flow rate, gpm

If the estimated total pipe inertia is less than 75% of I_{crit}, then water inertia should not be considered a concern. If the total pipe inertia is more than 75% of I_{crit}, then I_{up} and I_{down} should be calculated more precisely for comparison to I_{crit}.

Flow Restrictors

The SFM allows information to be input for one flow restrictor upstream of the valve and one flow restrictor downstream of the valve for Full SFM evaluation. The flow element where choked flow is most likely to occur should be defined as the flow restrictor. If there is more than one flow element at which choking may occur, a prediction should be run with each of the potential flow restrictors defined as the restrictor. The prediction reports should then be reviewed, and the run with the lowest upstream pressure at a given stroke position with the valve fully or partially open should be used. This procedure can be used first for the upstream piping (with no downstream restrictor) and then for the downstream piping (with no upstream restrictor) to identify the most restrictive flow elements.

D
SPECIFICATION FOR GATE VALVE DESIGN INFORMATION

The attached specification can be used to obtain the internal design information needed to implement PPM for Windows for gate valves.

--Content Deleted, EPRI Proprietary Material--

E
SPECIFICATION FOR GLOBE VALVE DESIGN INFORMATION

The attached specification can be used to obtain the internal design information needed to implement PPM for Windows for globe valves.

--Content Deleted, EPRI Proprietary Material--

F
SPECIFICATION FOR BUTTERFLY VALVE DESIGN INFORMATION

--Content Deleted, EPRI Proprietary Material--

G
DETERMINING WHETHER A GLOBE VALVE IS GUIDE-BASED OR SEAT-BASED

--Content Deleted, EPRI Proprietary Material--