RAI 2.1-1 SUPPLEMENTAL INFORMATION REQUEST BOUNDARY DIAGRAMS

	Dresden	Quad Cities	Total
New	32	33	65
Revised	39	42	81
Total	71	75	146

Quad Cities

LR-QDC-CID-13-2 R
LR-QDC-CID-14 N
LR-QDC-CID-60-2 R
LR-QDC-CID-61 N
LR-QDC-M-14 N
LR-QDC-M-15-1 R
LR-QDC-M-15-4 N
LR-QDC-M-16-1 R
LR-QDC-M-16-2 R
LR-QDC-M-16-3 N
LR-QDC-M-16-4 R
LR-QDC-M-16-5 R
LR-QDC-M-17 R
LR-QDC-M-18-1 N
LR-QDC-M-18-2 N
LR-QDC-M-18-3 N
LR-QDC-M-19-1 N
LR-QDC-M-21 N
LR-QDC-M-22-1 R
LR-QDC-M-22-2 N
LR-QDC-M-22-3 R
LR-QDC-M-22-4 R
LR-QDC-M-22-5 R
LR-QDC-M-23 N
LR-QDC-M-28-1 N
LR-QDC-M-31 N
LR-QDC-M-33-1 R
LR-QDC-M-33-2 R
LR-QDC-M-35-4 R
LR-QDC-M-38 R
LR-QDC-M-41-4 R
LR-QDC-M-42-1 N
LR-QDC-M-48-1 R
LR-QDC-M-48-2 N
LR-QDC-M-48-5 R
LR-QDC-M-48-6 N
LR-QDC-M-48-9 R
LR-QDC-M-58-1 R
LR-QDC-M-58-3 R
LR-QDC-M-61 N
LR-QDC-M-62-1 R
LR-QDC-M-62-4 N
LR-QDC-M-63-1 R
LR-QDC-M-63-2 R
LR-QDC-M-63-3 N
LR-QDC-M-63-4 R
LR-QDC-M-64 R
LR-QDC-M-65-1 N
LR-QDC-M-65-2 N
LR-QDC-M-65-3 N
LR-QDC-M-66-1 N
LR-QDC-M-68 N
LR-QDC-M-69-1 R
LR-QDC-M-69-2 N
LR-QDC-M-69-3 R
LR-QDC-M-69-4 R
LR-QDC-M-69-5 R
LR-QDC-M-75-1 R
LR-QDC-M-75-2 R
LR-QDC-M-77-4 R
LR-QDC-M-80 R
LR-QDC-M-83-4 R
LR-QDC-M-84-1 N
LR-QDC-M-459-1 N
LR-QDC-M-459-2 N
LR-QDC-M-459-3 R
LR-QDC-M-462-1 N
LR-QDC-M-462-2 N
LR-QDC-M-462-3 R
LR-QDC-M-2020-1 R
LR-QDC-M-2020-2 R
LR-QDC-M-2022-1 N
LR-QDC-M-2022-2 R
LR-QDC-M-2022-3 N
LR-QDC-M-2022-4 R

Dresden

LR-DRE-M-12-2 R
LR-DRE-M-13 N
LR-DRE-M-14 R
LR-DRE-M-15 R
LR-DRE-M-15-2 N
LR-DRE-M-16 R
LR-DRE-M-17-1 N
LR-DRE-M-17-2 N
LR-DRE-M-17-3 N
LR-DRE-M-20 R
LR-DRE-M-21 R
LR-DRE-M-22 R
LR-DRE-M-22A N
LR-DRE-M-30 R
LR-DRE-M-31 R
LR-DRE-M-34-1 R
LR-DRE-M-35-1 R
LR-DRE-M-35-2 N
LR-DRE-M-36 R
LR-DRE-M-37-7 N
LR-DRE-M-37-10 N
LR-DRE-M-41-1 R
LR-DRE-M-43-1 R
LR-DRE-M-45-1 N
LR-DRE-M-48 R
LR-DRE-M-50 N
LR-DRE-M-175-1 N
LR-DRE-M-177-1 R
LR-DRE-M-177-2 R
LR-DRE-M-177-3 N
LR-DRE-M-177-4 R
LR-DRE-M-178 R
LR-DRE-M-269-3 R
LR-DRE-M-345-2 R
LR-DRE-M-346 N
LR-DRE-M-347 R
LR-DRE-M-348 R
LR-DRE-M-349 N
LR-DRE-M-350-1 N
LR-DRE-M-350-2 N
LR-DRE-M-353 R
LR-DRE-M-354-1 R
LR-DRE-M-354-2 R
LR-DRE-M-355 R
LR-DRE-M-355A N
LR-DRE-M-362 R
LR-DRE-M-365-1 R
LR-DRE-M-366 R
LR-DRE-M-367-4 N
LR-DRE-M-367-6 N
LR-DRE-M-371-1 R
LR-DRE-M-419-1 R
LR-DRE-M-419-2 R
LR-DRE-M-419-3 N
LR-DRE-M-419-4 R
LR-DRE-M-420 R
LR-DRE-M-421 R
LR-DRE-M-530-1 N
LR-DRE-M-722 R
LR-DRE-M-1003 N
LR-DRE-M-1011-5 N
LR-DRE-M-3486 N
LR-DRE-M-3496 N
LR-DRE-M-4431 N
LR-DRE-M-4431A N
LR-DRE-M-5350-1 N
LR-DRE-M-5350-3 N
LR-DRE-M-5650-1 N
LR-DRE-M-5650-2 R
LR-DRE-M-5650-4 N
LR-DRE-M-5650-5 R

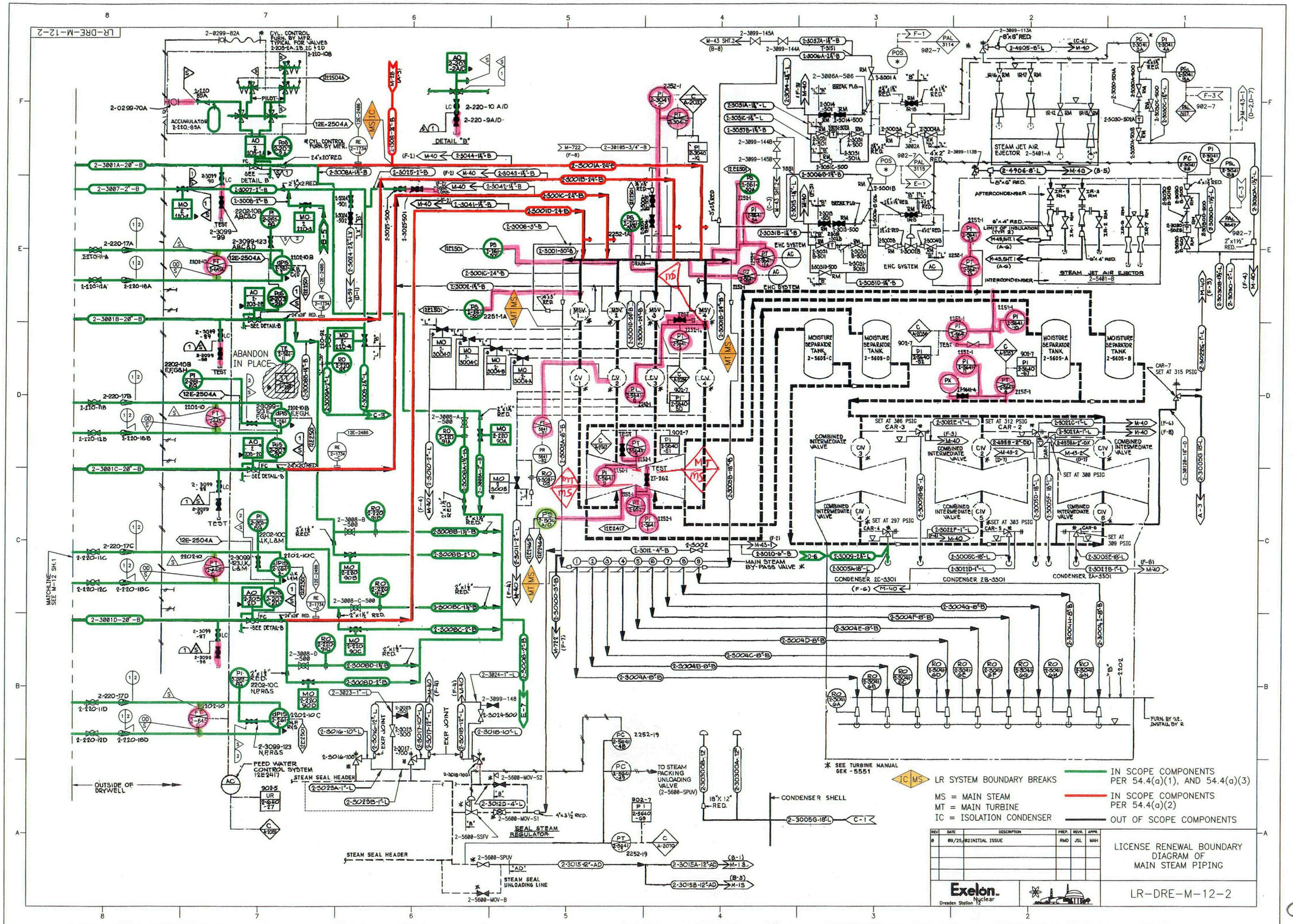
LR-DRE-M-12-2
ACCUMULATOR 2-210-89A
ABANDON IN PLACE
OUTSIDE OF DRYWELL
MATCHLINE SEE M-12 SH.1
FEED WATER CONTROL SYSTEM 12E2417
STEAM SEAL HEADER
STEAM SEAL UNLOADING LINE
SEAL STEAM REGULATOR
EXP JOINT
MAIN STEAM BY-PASS VALVE
EHC SYSTEM
STEAM JET AIR EJECTOR 2-5481-A
STEAM JET AIR EJECTOR 2-5481-B
AFTERCONDENSER
INTERCONDENSER
MOISTURE SEPARATOR TANK 2-5605-A
MOISTURE SEPARATOR TANK 2-5605-B
MOISTURE SEPARATOR TANK 2-5605-C
MOISTURE SEPARATOR TANK 2-5605-D
COMBINED INTERMEDIATE VALVE
CONDENSER 2A-3301
CONDENSER 2B-3301
CONDENSER 2C-3301
CONDENSER SHELL
TO STEAM PACKING UNLOADING VALVE (2-5600-SPUV)
* SEE TURBINE MANUAL GEK-5551
IC MS LR SYSTEM BOUNDARY BREAKS
MS = MAIN STEAM
MT = MAIN TURBINE
IC = ISOLATION CONDENSER
IN SCOPE COMPONENTS PER 54.4(a)(1), AND 54.4(a)(3)
IN SCOPE COMPONENTS PER 54.4(a)(2)
OUT OF SCOPE COMPONENTS
REV DATE DESCRIPTION PREP. REVR. APPR.
0 09/25/02 INITIAL ISSUE RMD JSL MAH
LICENSE RENEWAL BOUNDARY DIAGRAM OF MAIN STEAM PIPING
Exelon Nuclear
Dresden Station
LR-DRE-M-12-2

C01

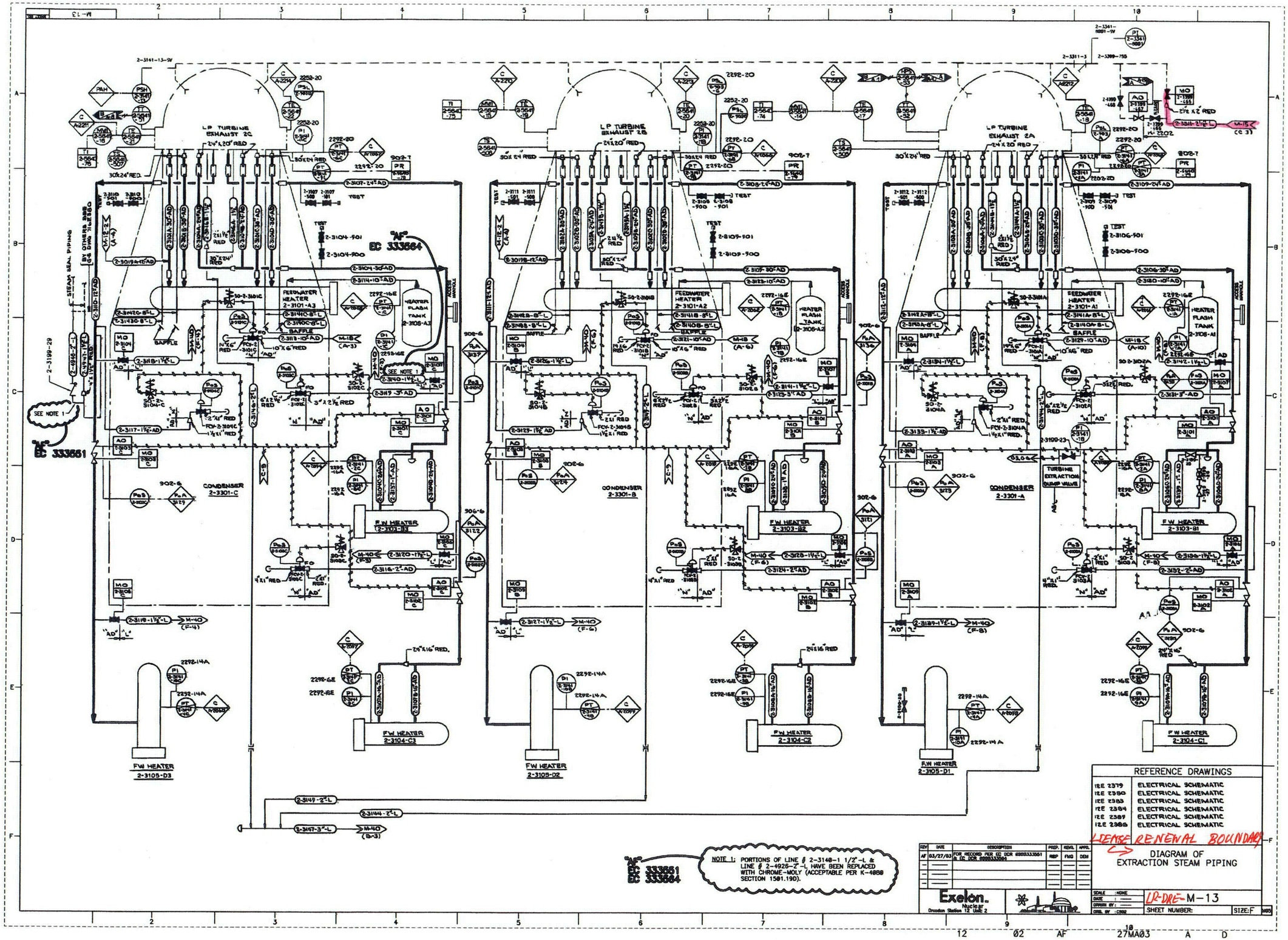

REFERENCE DRAWINGS	
12E 2379	ELECTRICAL SCHEMATIC
12E 2380	ELECTRICAL SCHEMATIC
12E 2383	ELECTRICAL SCHEMATIC
12E 2384	ELECTRICAL SCHEMATIC
12E 2387	ELECTRICAL SCHEMATIC
12E 2388	ELECTRICAL SCHEMATIC

LICENSE RENEWAL BOUNDARY

REV	DATE	DESCRIPTION	PREP.	REVIL.	APPL.
AF	03/27/03	FOR RECORD PER EC DCR 00003333661 & EC DCR 00003333664	REP	FLG	DEM

Exelon. Nuclear
Dresden Station 12 Unit 2

DIAGRAM OF EXTRACTION STEAM PIPING

SCALE : NONE
DATE : ——
DRAWN BY : ——
ORIG. BY : C002

LR-DRE-M-13

SHEET NUMBER: SIZE: F

12 02 AF 27MA03 A D

C02

LR-DRE-M-14

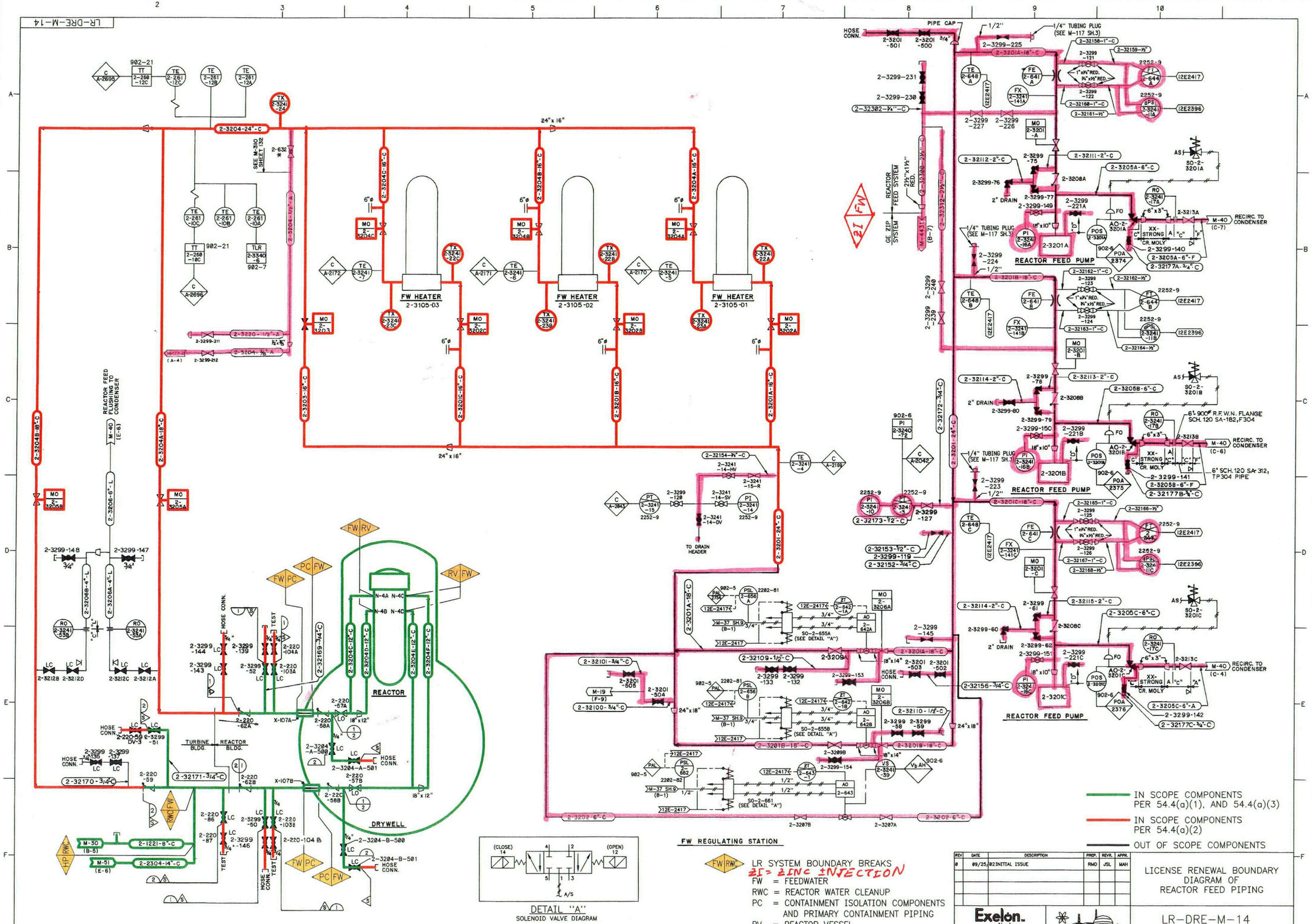

REV	DATE	DESCRIPTION	PREP.	REVR.	APPR.
0	09/25/02	INITIAL ISSUE	RMD	JSL	MAH

C03

LR-DRE-M-15

CONDENSATE DEMINERALIZER

CONDENSATE BOOSTER PUMPS

CONDENSATE PUMPS

HOTWELL PUMPS

GLAND STEAM CONDENSER 2-5603-B

GLAND STEAM CONDENSER 2-5603-A

STEAM JET AIR EJECTOR 2-5401-B

STEAM JET AIR EJECTOR 2-5401-A

HYDROGEN STORAGE FACILITY DWG. M-3658, SHT. 1

CONDENSER EXHAUST 2C-3301

CONDENSER EXHAUST 2B-3301

CONDENSER EXHAUST 2A-3301

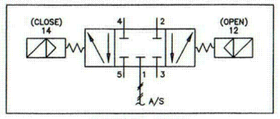

DETAIL "A"
SOLENOID VALVE DIAGRAM

CD/MC LR SYSTEM BOUNDARY BREAKS

CD = CONDENSATE AND CONDENSATE STORAGE

MC = MAIN CONDENSER

IN SCOPE COMPONENTS PER 54.4(a)(1), AND 54.4(a)(3)

OUT OF SCOPE COMPONENTS

REV	DATE	DESCRIPTION	PREP.	REVR.	APPR.
0	09/04/02	INITIAL ISSUE	RMD	JSL	MAH

Exelon. Dresden Station Nuclear

LICENSE RENEWAL BOUNDARY DIAGRAM OF CONDENSATE PIPING

LR-DRE-M-15

C04

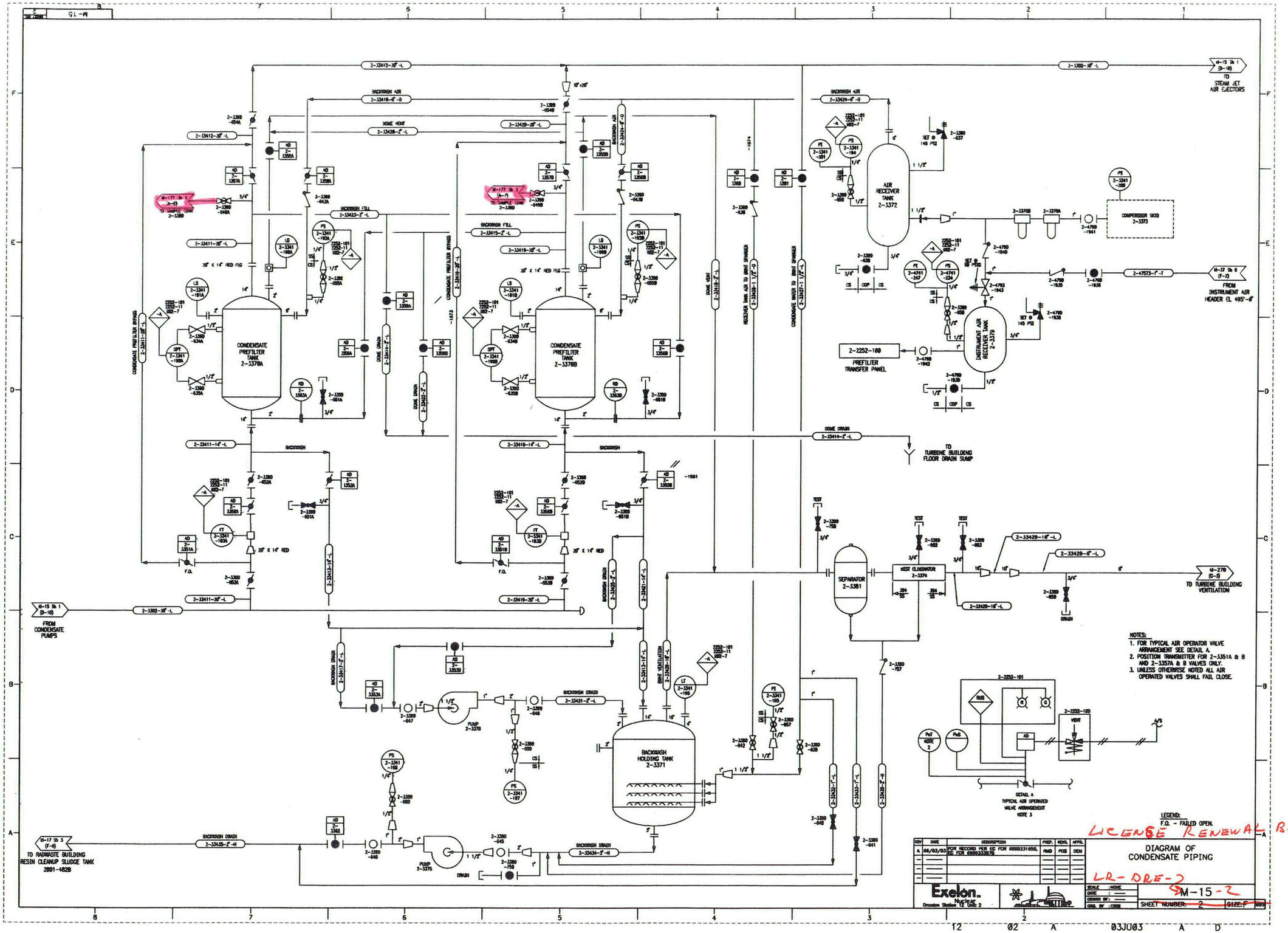
CONDENSATE PREFILTER TANK 2-3378A
CONDENSATE PREFILTER TANK 2-3378B
AIR RECEIVER TANK 2-3372
COMPRESSOR SKID 2-3373
INSTRUMENT AIR RECEIVER TANK 2-3379
PREFILTER TRANSFER PANEL
SEPARATOR 2-3381
MIST ELIMINATOR 2-3374
BACKWASH HOLDING TANK 2-3371
PUMP 2-3376
PUMP 2-3375
TO STEAM JET AIR EJECTORS
FROM INSTRUMENT AIR HEADER EL 495'-6"
TO TURBINE BUILDING FLOOR DRAIN SUMP
TO TURBINE BUILDING VENTILATION
FROM CONDENSATE PUMPS
TO RADWASTE BUILDING RESIN CLEANUP SLUDGE TANK 2001-482B
NOTES:
1. FOR TYPICAL AIR OPERATOR VALVE ARRANGEMENT SEE DETAIL A.
2. POSITION TRANSMITTER FOR 2-3351A & B AND 2-3357A & B VALVES ONLY.
3. UNLESS OTHERWISE NOTED ALL AIR OPERATED VALVES SHALL FAIL CLOSE.
DETAIL A
TYPICAL AIR OPERATED VALVE ARRANGEMENT
NOTE 3
LEGEND:
F.O. - FAILED OPEN.
LICENSE RENEWAL BOUNDARY
DIAGRAM OF
CONDENSATE PIPING
Exelon.
Dresden Station
Unit 2
LR-DRE-2
M-15-2
SHEET NUMBER: 2
SIZE: F

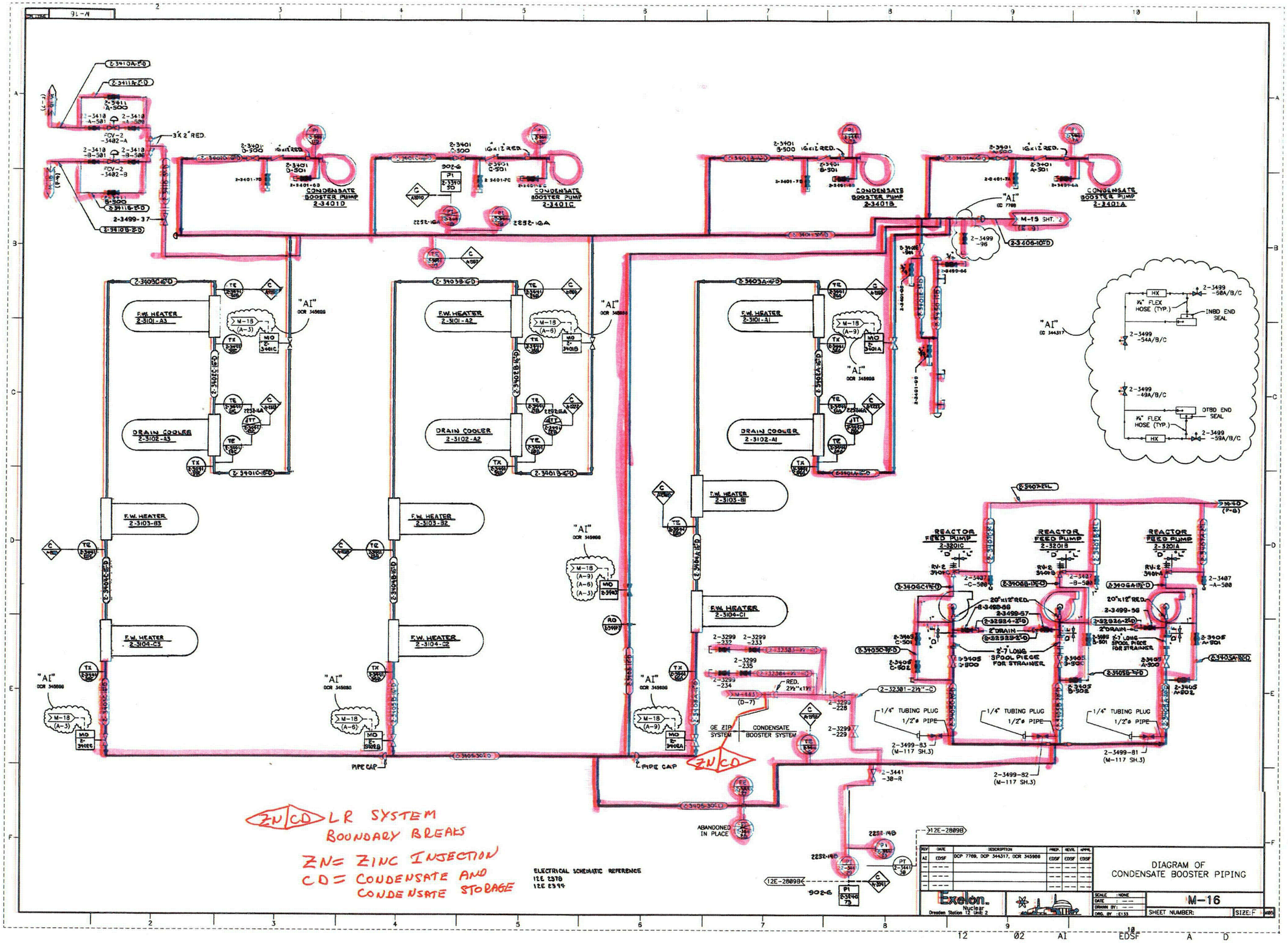
CONDENSATE BOOSTER PUMP 2-3401D
CONDENSATE BOOSTER PUMP 2-3401C
CONDENSATE BOOSTER PUMP 2-3401B
CONDENSATE BOOSTER PUMP 2-3401A
F.W. HEATER 2-3101-A3
F.W. HEATER 2-3101-A2
F.W. HEATER 2-3101-A1
DRAIN COOLER 2-3102-A3
DRAIN COOLER 2-3102-A2
DRAIN COOLER 2-3102-A1
F.W. HEATER 2-3103-B3
F.W. HEATER 2-3103-B2
F.W. HEATER 2-3103-B1
F.W. HEATER 2-3104-C3
F.W. HEATER 2-3104-C2
F.W. HEATER 2-3104-C1
REACTOR FEED PUMP 2-3201C
REACTOR FEED PUMP 2-3201B
REACTOR FEED PUMP 2-3201A
GE ZIP SYSTEM
CONDENSATE BOOSTER SYSTEM
ZN/CD
PIPE CAP
ABANDONED IN PLACE
INBD END SEAL
OTBD END SEAL
1/4" TUBING PLUG
1/2"ø PIPE
2"DRAIN
2-7' LONG SPOOL PIECE FOR STRAINER
ZN/CD LR SYSTEM BOUNDARY BREAKS
ZN= ZINC INJECTION
CD= CONDENSATE AND CONDENSATE STORAGE
ELECTRICAL SCHEMATIC REFERENCE
12E 2378
12E 2399
DIAGRAM OF CONDENSATE BOOSTER PIPING
Exelon Nuclear
Dresden Station 12 Unit 2
M-16
SHEET NUMBER:
SIZE: F

CC6

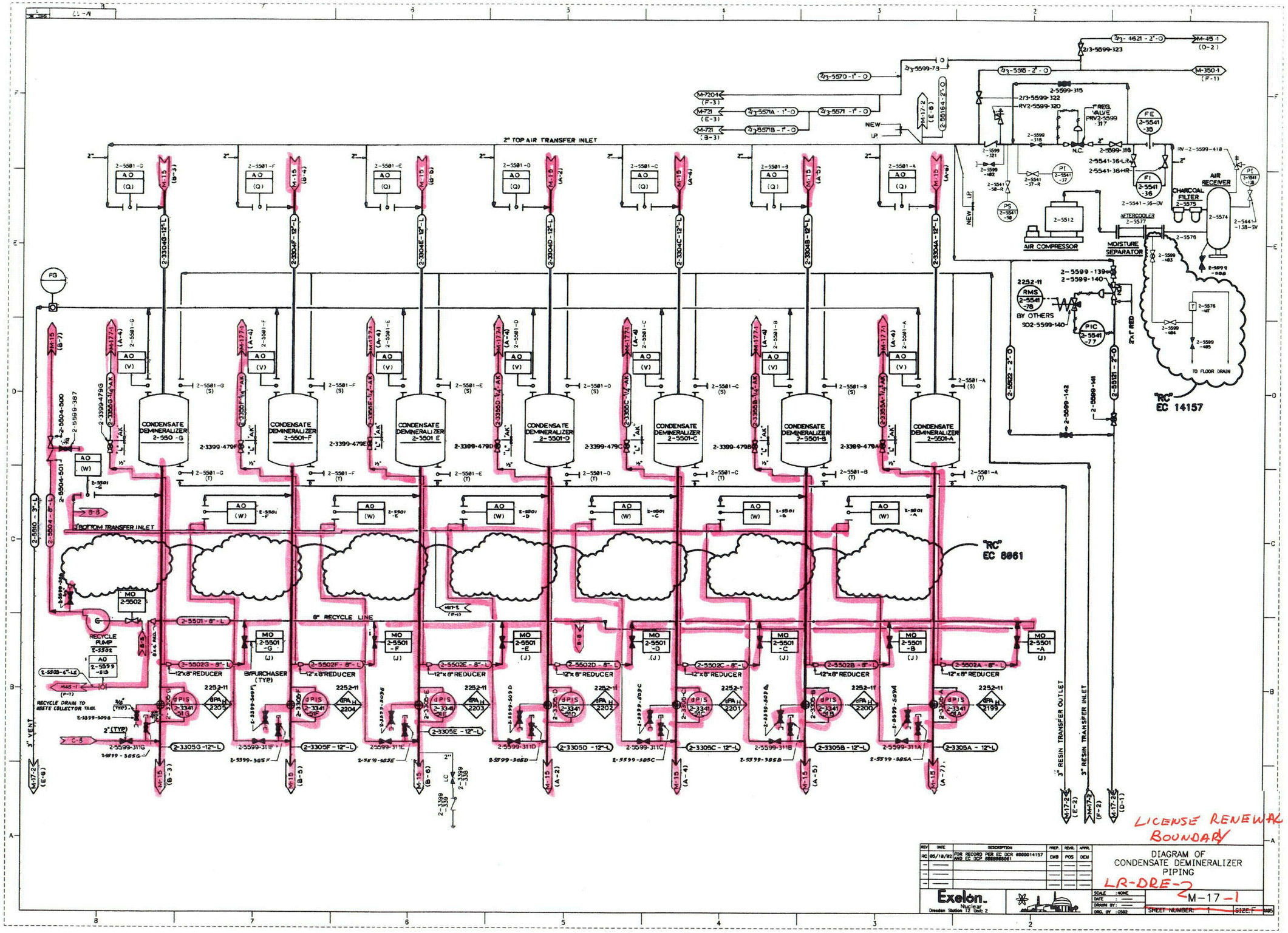
2" TOP AIR TRANSFER INLET
3" BOTTOM TRANSFER INLET
8" RECYCLE LINE
CONDENSATE DEMINERALIZER 2-550-G
CONDENSATE DEMINERALIZER 2-5501-F
CONDENSATE DEMINERALIZER 2-5501 E
CONDENSATE DEMINERALIZER 2-5501-D
CONDENSATE DEMINERALIZER 2-5501-C
CONDENSATE DEMINERALIZER 2-5501-B
CONDENSATE DEMINERALIZER 2-5501-A
AIR COMPRESSOR
MOISTURE SEPARATOR
AFTERCOOLER
CHARCOAL FILTER
AIR RECEIVER
TO FLOOR DRAIN
RECYCLE PUMP
RECYCLE DRAIN TO WASTE COLLECTOR TANK
3" VENT
3" RESIN TRANSFER OUTLET
3" RESIN TRANSFER INLET
12"x8" REDUCER
BY OTHERS
"RC" EC 14157
"RC" EC 8861
LICENSE RENEWAL BOUNDARY
LR-DRE-2
DIAGRAM OF CONDENSATE DEMINERALIZER PIPING
M-17-1
Exelon. Nuclear
Dresden Station 12 Unit 2

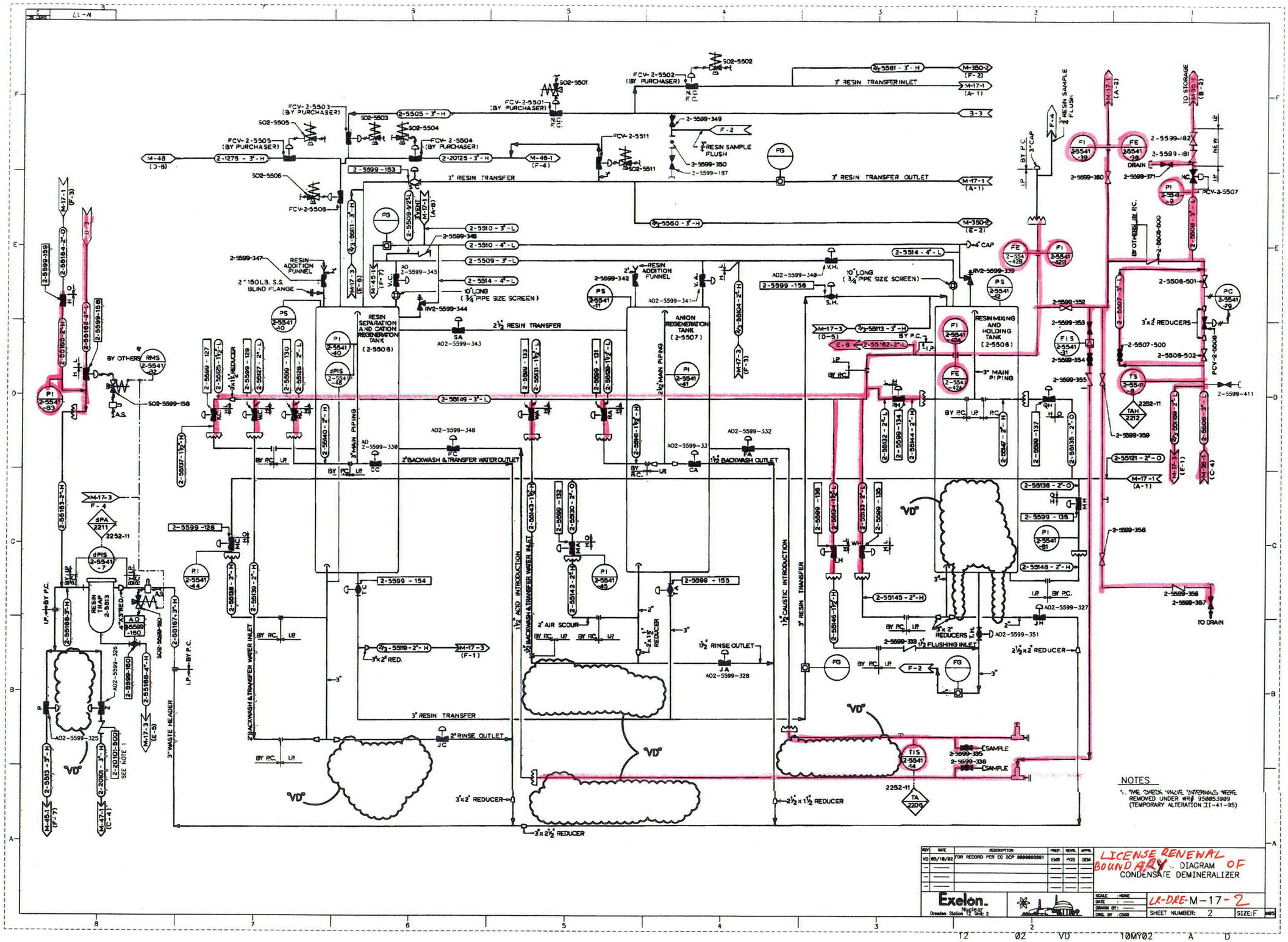
RESIN SEPARATION AND CATION REGENERATION TANK (2-5508)
ANION REGENERATION TANK (2-5507)
RESIN MIXING AND HOLDING TANK (2-5506)
3" RESIN TRANSFER INLET
3" RESIN TRANSFER OUTLET
3" RESIN TRANSFER
2½" RESIN TRANSFER
2" BACKWASH & TRANSFER WATER OUTLET
1½" BACKWASH OUTLET
2" BACKWASH & TRANSFER WATER INLET
1½" ACID INTRODUCTION
1½" CAUSTIC INTRODUCTION
3" RESIN TRANSFER
3" MAIN PIPING
2½" MAIN PIPING
3" WASTE HEADER
2" AIR SCOUR
2" RINSE OUTLET
1½" RINSE OUTLET
1½" FLUSHING INLET
3"x2" REDUCER
3"x2½" REDUCER
2½"x1½" REDUCER
3"x2" RED.
3"x¾" REDUCERS
10" LONG (¾" PIPE SIZE SCREEN)
2" 150LB. S.S. BLIND FLANGE
RESIN ADDITION FUNNEL
3" RESIN SAMPLE FLUSH
TO STORAGE
TO DRAIN
DRAIN
SAMPLE
BY OTHERS
VD
NOTES
1. THE CHECK VALVE INTERNALS WERE REMOVED UNDER WR# 950053989 (TEMPORARY ALTERATION II-41-95)
LICENSE RENEWAL BOUNDARY DIAGRAM OF CONDENSATE DEMINERALIZER
Exelon. Nuclear
Dresden Station Unit 2
LR-DRE-M-17-2
SHEET NUMBER: 2
SIZE: F
REV VD 05/18/02 FOR RECORD PER EC DCP 000000061
12 02 VD 10MY02 A D

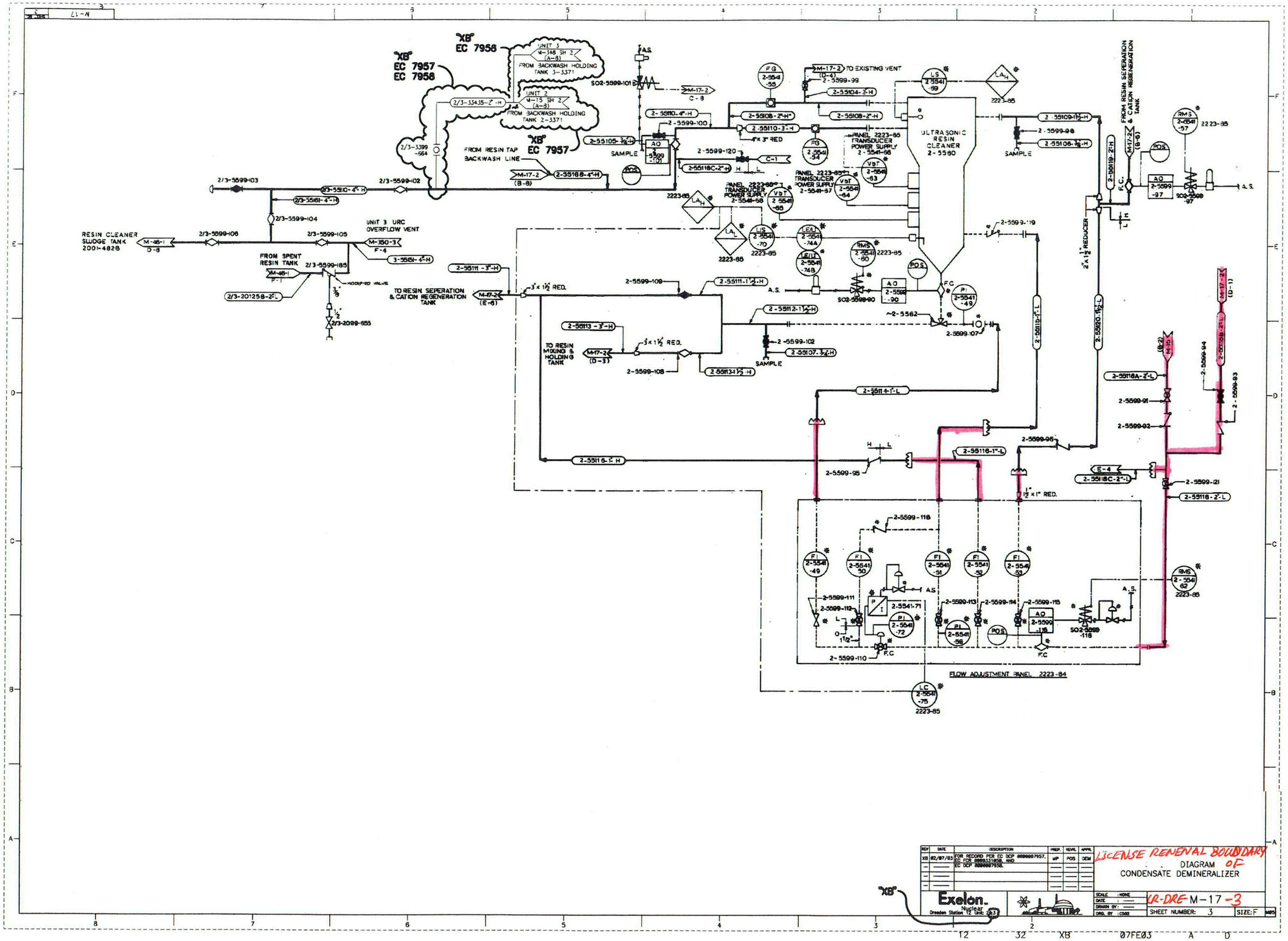
"XB" EC 7958
"XB" EC 7957 EC 7958
UNIT 3 M-148 SH 2 (A-8) FROM BACKWASH HOLDING TANK 3-3371
UNIT 2 M-15 SH 2 (A-8) FROM BACKWASH HOLDING TANK 2-3371
"XB" EC 7957
FROM RESIN TAP BACKWASH LINE
ULTRASONIC RESIN CLEANER 2-5560
TO EXISTING VENT
FROM RESIN SEPERATION & CATION REGENERATION TANK
RESIN CLEANER SLUDGE TANK 2001-4828
UNIT 3 URC OVERFLOW VENT
FROM SPENT RESIN TANK
TO RESIN SEPERATION & CATION REGENERATION TANK
TO RESIN MIXING & HOLDING TANK
FLOW ADJUSTMENT PANEL 2223-84
LICENSE RENEWAL BOUNDARY OF
DIAGRAM
CONDENSATE DEMINERALIZER
Exelon. Nuclear
Dresden Station 12 Unit 2&3
LR-DRE M-17-3
SHEET NUMBER: 3
SIZE: F
12 32 XB 07FE03 A D

C09

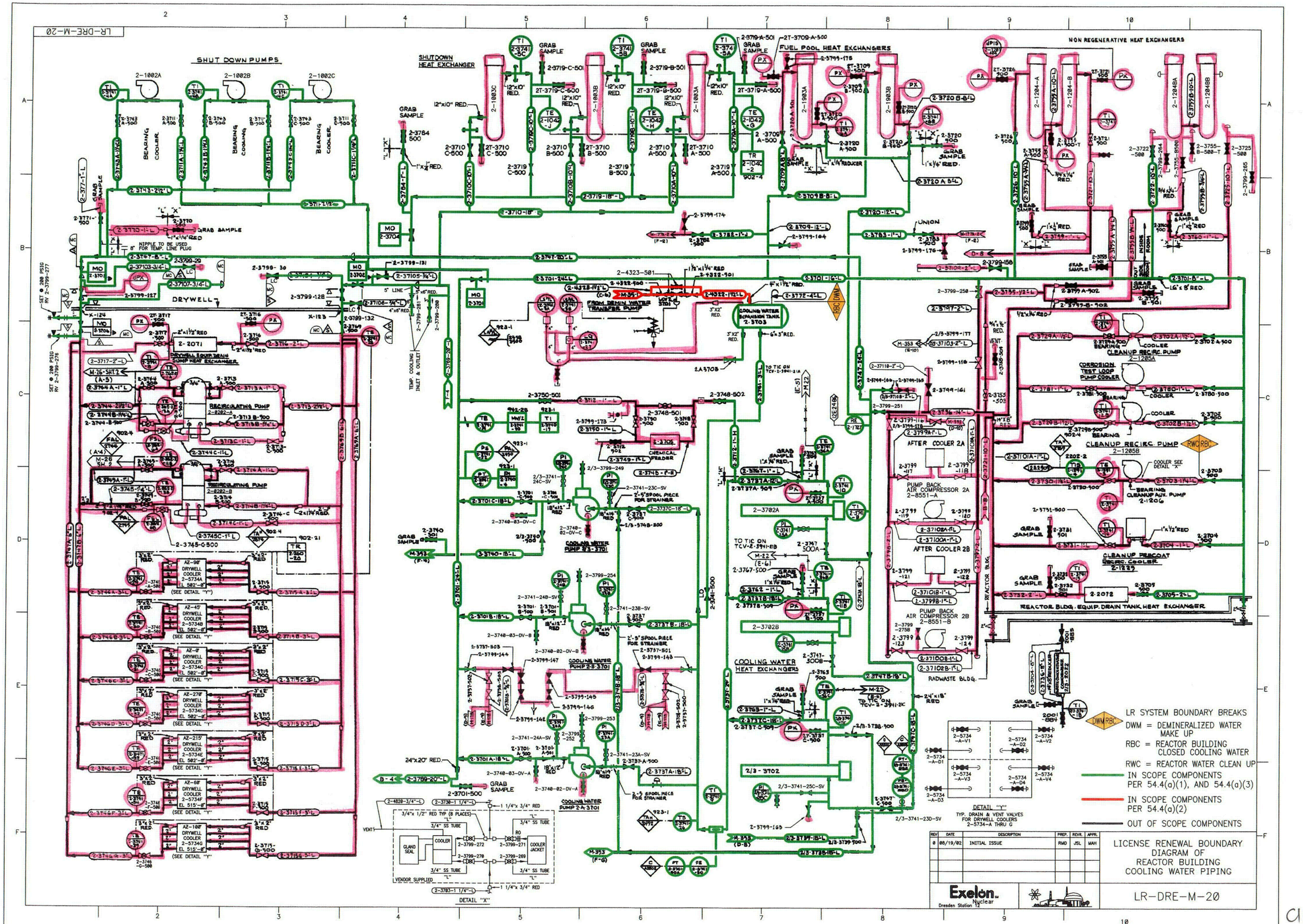
LR-DRE-M-20
SHUT DOWN PUMPS
SHUTDOWN HEAT EXCHANGER
FUEL POOL HEAT EXCHANGERS
NON REGENERATIVE HEAT EXCHANGERS
DRYWELL
DRYWELL EQUIP. DRAIN SUMP HEAT EXCHANGER
RECIRCULATING PUMP
COOLING WATER PUMP 2-B-3701
COOLING WATER PUMP 2-A-3701
COOLING WATER HEAT EXCHANGERS
FROM DEMIN WATER TRANSFER PUMP
COOLING WATER EXPANSION TANK 2-3703
CHEMICAL FEEDER
AFTER COOLER 2A
AFTER COOLER 2B
PUMP BACK AIR COMPRESSOR 2A 2-8551-A
PUMP BACK AIR COMPRESSOR 2B 2-8551-B
CLEANUP RECIRC. PUMP 2-1285A
CLEANUP RECIRC. PUMP 2-1285B
CLEANUP AUX. PUMP 2-1206
CLEANUP PERCOAT RECIRC. COOLER 2-1229
REACTOR BLDG. EQUIP. DRAIN TANK HEAT EXCHANGER
RADWASTE BLDG.
REACTOR BLDG.
DETAIL "X"
DETAIL "Y"
TYP. DRAIN & VENT VALVES FOR DRYWELL COOLERS 2-5734-A THRU G
LR SYSTEM BOUNDARY BREAKS
DWM = DEMINERALIZED WATER MAKE UP
RBC = REACTOR BUILDING CLOSED COOLING WATER
RWC = REACTOR WATER CLEAN UP
IN SCOPE COMPONENTS PER 54.4(a)(1), AND 54.4(a)(3)
IN SCOPE COMPONENTS PER 54.4(a)(2)
OUT OF SCOPE COMPONENTS
REV | DATE | DESCRIPTION | PREP. | REVR. | APPR.
0 | 08/19/02 | INITIAL ISSUE | RWD | JSL | MAH
Exelon Nuclear
Dresden Station
LICENSE RENEWAL BOUNDARY DIAGRAM OF REACTOR BUILDING COOLING WATER PIPING
LR-DRE-M-20

C10

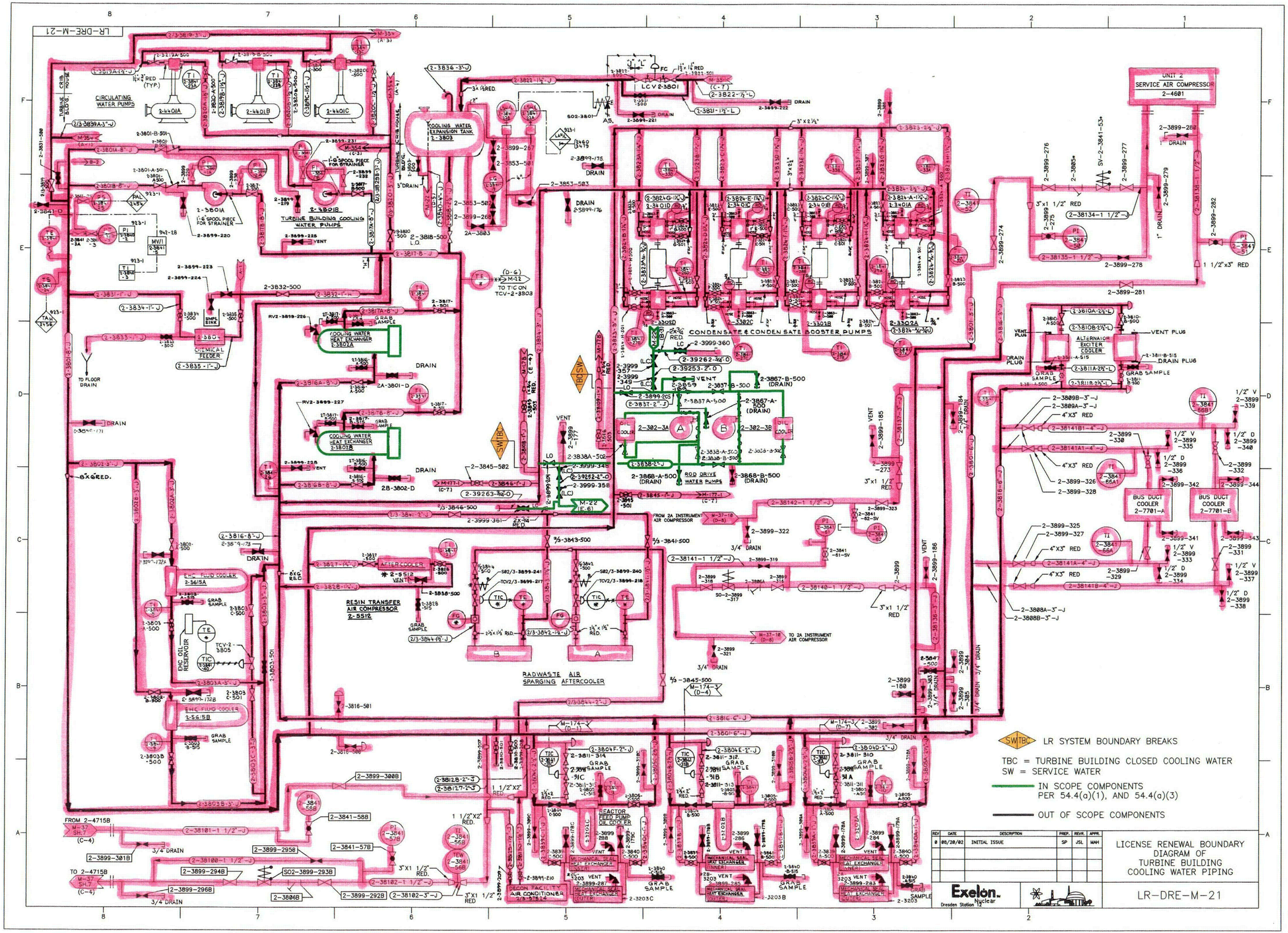
LR-DRE-M-21
CIRCULATING WATER PUMPS
2-4401A
2-4401B
2-4401C
COOLING WATER EXPANSION TANK 2-3803
TURBINE BUILDING COOLING WATER PUMPS
2-3801A
2-3801B
CHEMICAL FEEDER
COOLING WATER HEAT EXCHANGER 2-3802A
COOLING WATER HEAT EXCHANGER 2-3802B
LCV 2-3801
CONDENSATE & CONDENSATE BOOSTER PUMPS
ROD DRIVE WATER PUMPS
UNIT 2 SERVICE AIR COMPRESSOR 2-4601
ALTERNAIOR EXCITER COOLER
BUS DUCT COOLER 2-7701-A
BUS DUCT COOLER 2-7701-B
EHC FLUID COOLER 2-5615A
EHC FLUID COOLER 2-5615B
EHC OIL RESERVOIR
RESIN TRANSFER AIR COMPRESSOR 2-5512
AFTER COOLER
RADWASTE AIR SPARGING AFTERCOOLER
AIR CONDITIONER 2/3-5734
MECHANICAL SEAL HEAT EXCHANGER (INNER)
MECHANICAL SEAL HEAT EXCHANGER (OUTER)
REACTOR FEED PUMP OIL COOLER
TO TIC ON TCV-2-3803
FROM 2A INSTRUMENT AIR COMPRESSOR
TO 2A INSTRUMENT AIR COMPRESSOR
FROM 2-4715B
TO 2-4715B
TO FLOOR DRAIN
SWTBC
LR SYSTEM BOUNDARY BREAKS
TBC = TURBINE BUILDING CLOSED COOLING WATER
SW = SERVICE WATER
IN SCOPE COMPONENTS PER 54.4(a)(1), AND 54.4(a)(3)
OUT OF SCOPE COMPONENTS
REV DATE DESCRIPTION PREP. REVR. APPR.
0 08/20/02 INITIAL ISSUE SP JSL MAH
LICENSE RENEWAL BOUNDARY DIAGRAM OF TURBINE BUILDING COOLING WATER PIPING
Exelon. Nuclear
Dresden Station 12
LR-DRE-M-21

C11

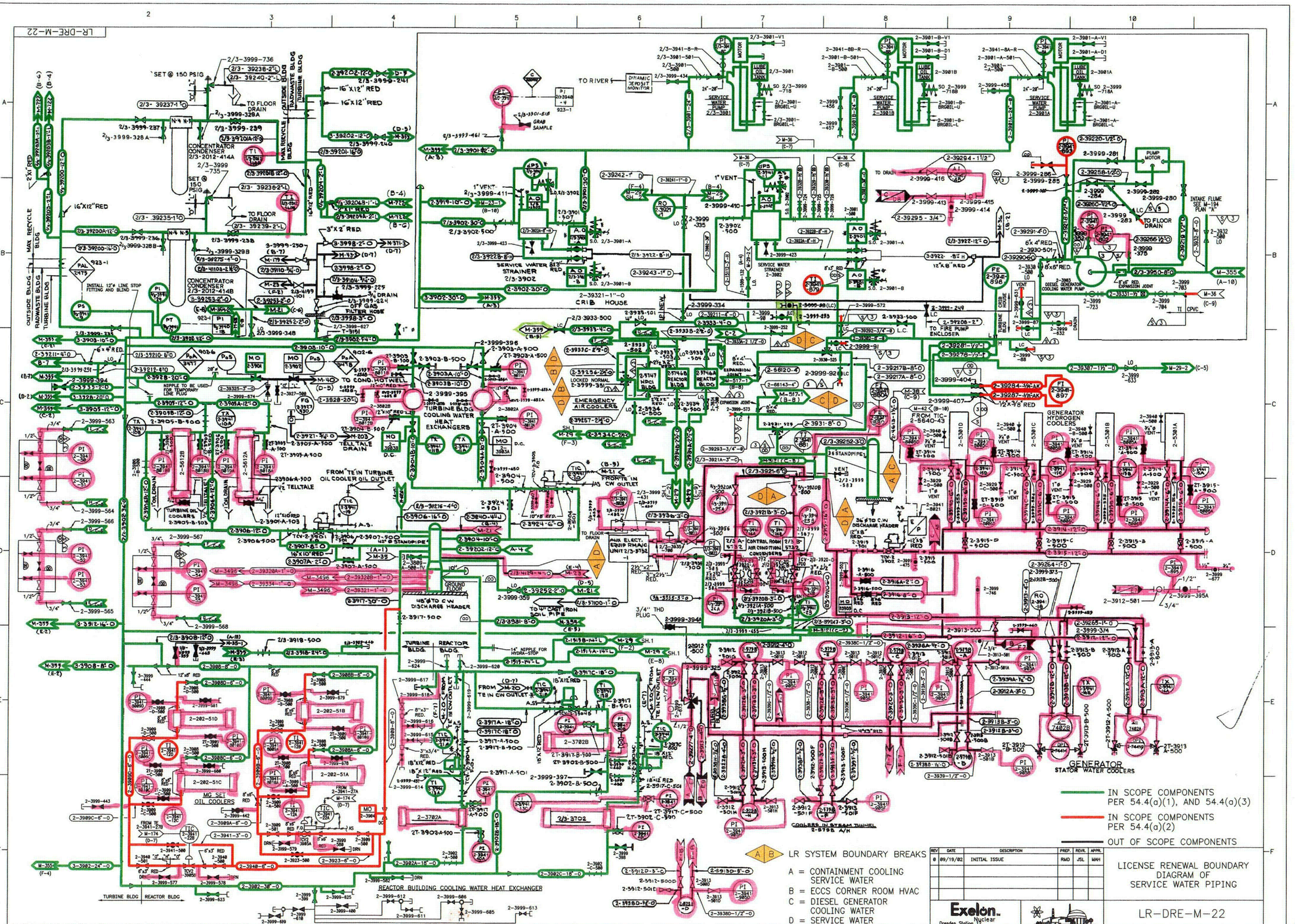
LR-DRE-M-22
CONCENTRATOR CONDENSER 2/3-2012-414A
CONCENTRATOR CONDENSER 2/3-2012-414B
SERVICE WATER STRAINER 2/3-3902
CRIB HOUSE
TO RIVER
DYNAMIC DEPOSIT MONITOR
SERVICE WATER PUMP 2/3-3901
SERVICE WATER PUMP 2-3901B
SERVICE WATER PUMP 2-3901A
TURBINE BLDG COOLING WATER HEAT EXCHANGERS
EMERGENCY AIR COOLERS
TO COND. HOTWELL
TELLTALE DRAIN
FROM TE IN TURBINE OIL COOLER OIL OUTLET
FROM TE IN CW OUTLET
TO 48" CW DISCHARGE HEADER
36" CW DISCHARGE HEADER
FROM TIC-2-5640-43
GENERATOR HYDROGEN COOLERS
GENERATOR STATOR WATER COOLERS
MG SET OIL COOLERS
REACTOR BUILDING COOLING WATER HEAT EXCHANGER
COOLERS IN STEAM TUNNEL 2-5795 A/H
TURBINE BLDG
REACTOR BLDG
OUTSIDE BLDG
RADWASTE BLDG
MAX RECYCLE BLDG
INTAKE FLUME SEE M-194 PLAN "A"
TO FIRE PUMP ENCLOSER
TO FLOOR DRAIN
IN SCOPE COMPONENTS PER 54.4(a)(1), AND 54.4(a)(3)
IN SCOPE COMPONENTS PER 54.4(a)(2)
OUT OF SCOPE COMPONENTS
A B LR SYSTEM BOUNDARY BREAKS
A = CONTAINMENT COOLING SERVICE WATER
B = ECCS CORNER ROOM HVAC
C = DIESEL GENERATOR COOLING WATER
D = SERVICE WATER
REV DATE DESCRIPTION PREP. REVR. APPR.
0 09/19/02 INITIAL ISSUE RMD JSL MAH
LICENSE RENEWAL BOUNDARY DIAGRAM OF SERVICE WATER PIPING
Exelon. Nuclear
Dresden Station
LR-DRE-M-22

C12

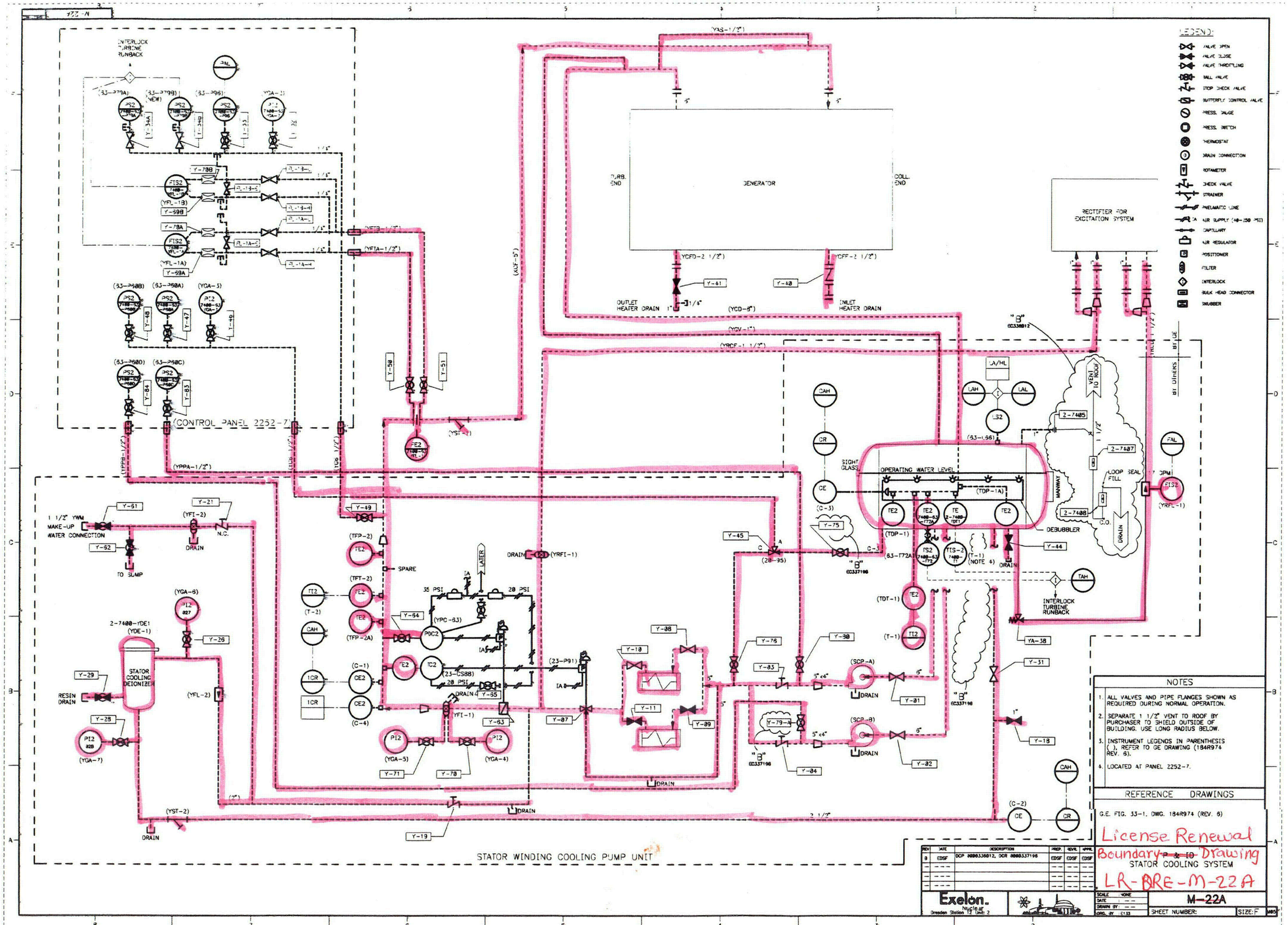

NOTES

1. ALL VALVES AND PIPE FLANGES SHOWN AS REQUIRED DURING NORMAL OPERATION.
2. SEPARATE 1 1/2" VENT TO ROOF BY PURCHASER TO SHIELD OUTSIDE OF BUILDING. USE LONG RADIUS BELOW.
3. INSTRUMENT LEGENDS IN PARENTHESIS ( ), REFER TO GE DRAWING (184R974 REV. 6).
4. LOCATED AT PANEL 2252-7.

REFERENCE DRAWINGS

G.E. FIG. 33-1, DWG. 184R974 (REV. 6)

REV	DATE	DESCRIPTION	PREP.	REVIL	APPR.
B	EDSF	DCP 2080336012, DCR 2080337196	EDSF	EDSF	EDSF

License Renewal Boundary ~~P & ID~~ Drawing

STATOR COOLING SYSTEM

LR-BRE-M-22A

Exelon. Nuclear
Dresden Station 12 Unit 2

SCALE: NONE
DATE: --
DRAWN BY: --
ORG. BY: E133

M-22A

SHEET NUMBER: SIZE: F

C13

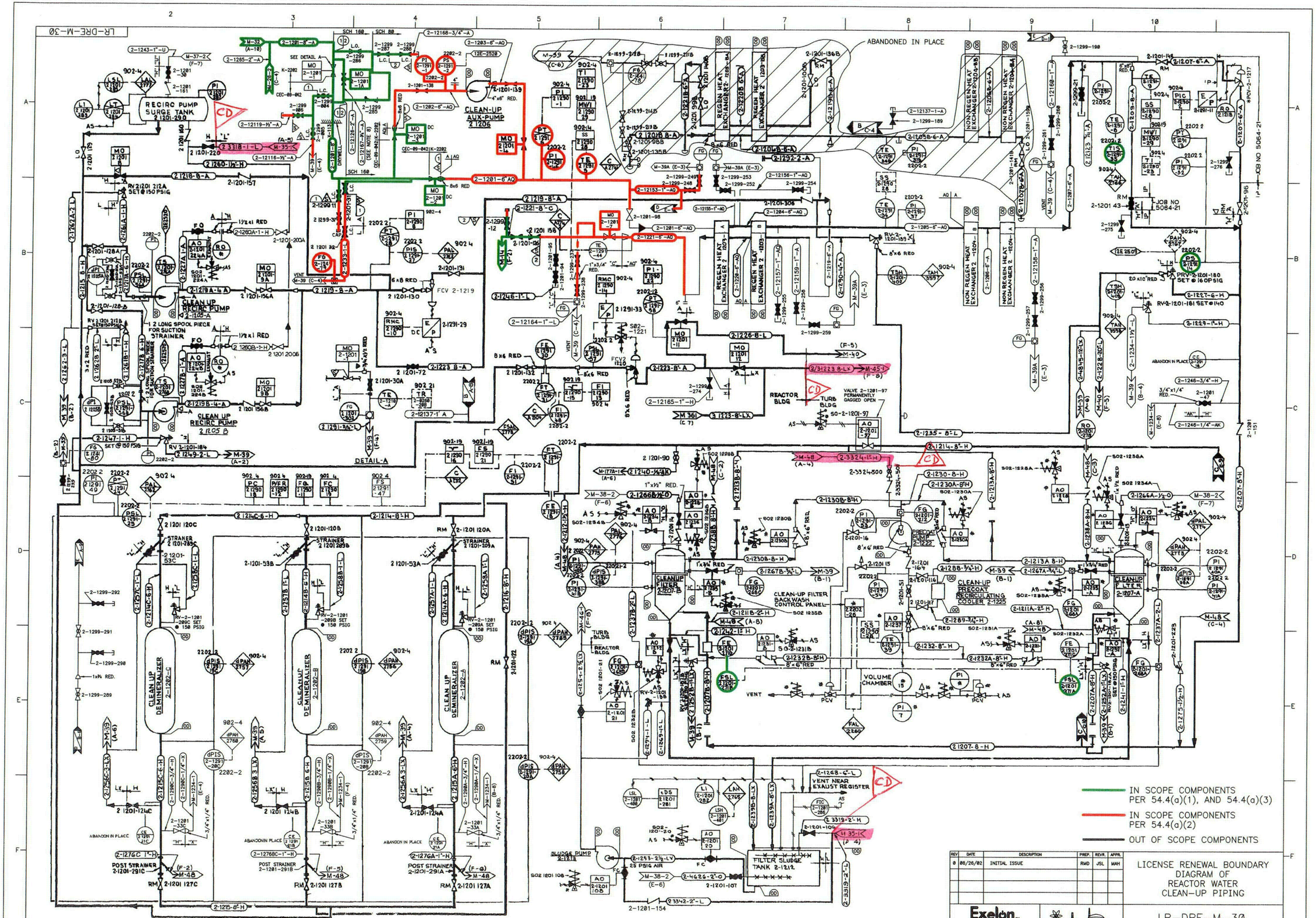
LR-DRE-M-30
RECIRC PUMP SURGE TANK 2-1201-290
CLEAN-UP AUX-PUMP 2-1206
CLEAN UP RECIRC PUMP 2-1205-A
CLEAN UP RECIRC PUMP 2-1205-B
DETAIL-A
ABANDONED IN PLACE
REGEN HEAT EXCHANGER 2-1203-A
REGEN HEAT EXCHANGER 2-1203-B
NON REGEN HEAT EXCHANGER 2-1204-A
NON REGEN HEAT EXCHANGER 2-1204-B
JOB NO 5064-21
CLEAN UP DEMINERALIZER 2-1202-C
CLEAN UP DEMINERALIZER 2-1202-B
CLEAN UP DEMINERALIZER 2-1202-A
CLEAN-UP FILTER 2-1207-B
CLEAN-UP FILTER 2-1207-A
CLEAN-UP PRECOAT RECIRCULATING COOLER 2-1225
PRECOAT PUMP 2-1222
CLEAN-UP FILTER BACKWASH CONTROL PANEL
VOLUME CHAMBER
FILTER SLUDGE TANK 2-1212
VENT NEAR EXAUST REGISTER
REACTOR BLDG
TURB BLDG
VALVE 2-1201-97 PERMANENTLY GAGGED OPEN
POST STRAINER 2-1201-291A
POST STRAINER 2-1201-291B
POST STRAINER 2-1201-291C
IN SCOPE COMPONENTS PER 54.4(a)(1), AND 54.4(a)(3)
IN SCOPE COMPONENTS PER 54.4(a)(2)
OUT OF SCOPE COMPONENTS
REV DATE DESCRIPTION PREP. REVR. APPR.
0 06/26/02 INITIAL ISSUE RMD JSL MAH
LICENSE RENEWAL BOUNDARY DIAGRAM OF REACTOR WATER CLEAN-UP PIPING
Exelon. Dresden Station Nuclear
LR-DRE-M-30

C14

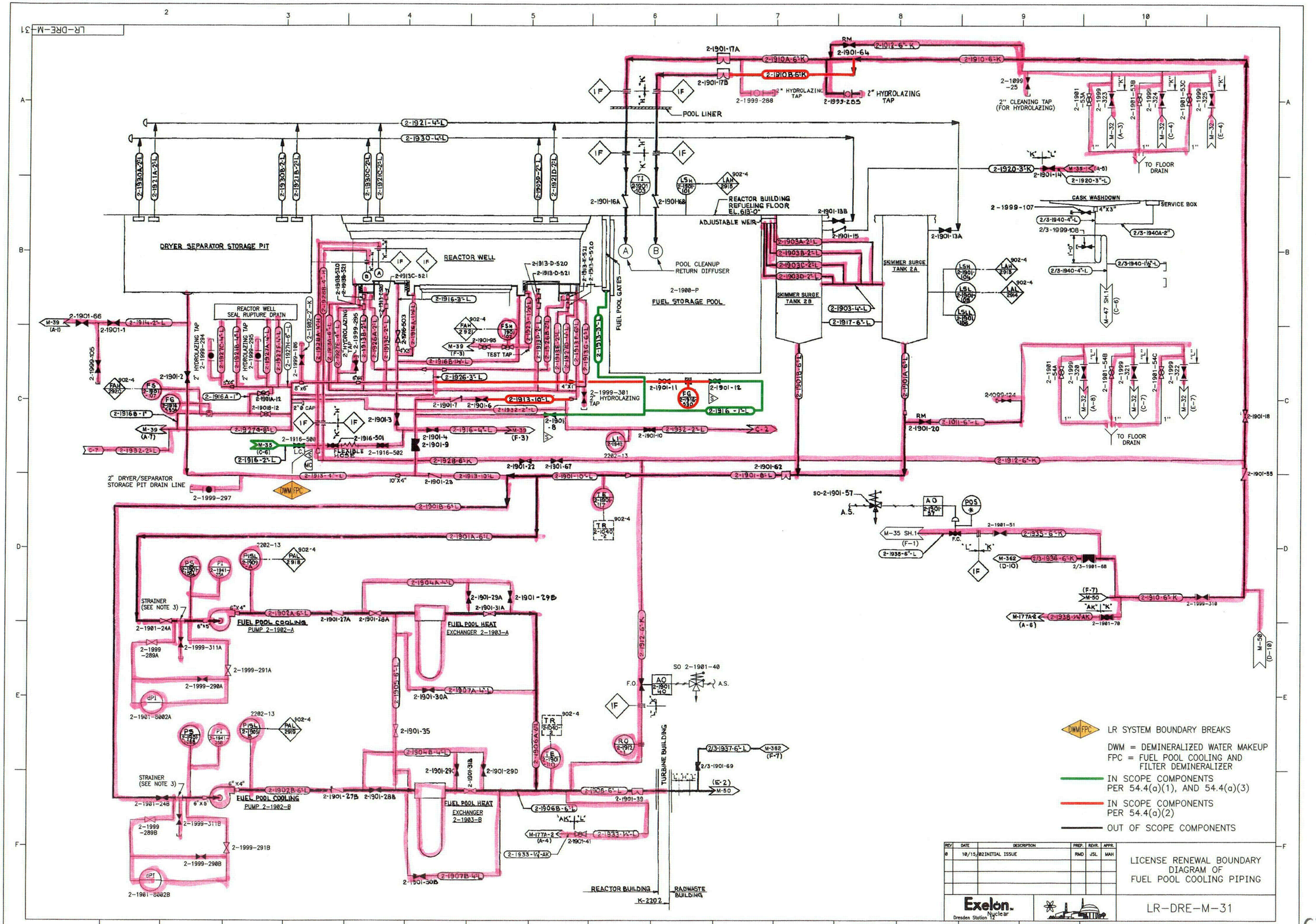
LR-DRE-M-31
DRYER SEPARATOR STORAGE PIT
REACTOR WELL
REACTOR WELL SEAL RUPTURE DRAIN
POOL LINER
REACTOR BUILDING REFUELING FLOOR EL. 613'-0"
ADJUSTABLE WEIR
POOL CLEANUP RETURN DIFFUSER
2-1900-P
FUEL STORAGE POOL
FUEL POOL GATES
SKIMMER SURGE TANK 2A
SKIMMER SURGE TANK 2B
2" HYDROLAZING TAP
2" CLEANING TAP (FOR HYDROLAZING)
TO FLOOR DRAIN
CASK WASHDOWN
SERVICE BOX
2" DRYER/SEPARATOR STORAGE PIT DRAIN LINE
FUEL POOL COOLING PUMP 2-1902-A
FUEL POOL COOLING PUMP 2-1902-B
FUEL POOL HEAT EXCHANGER 2-1903-A
FUEL POOL HEAT EXCHANGER 2-1903-B
STRAINER (SEE NOTE 3)
TEST TAP
TURBINE BUILDING
REACTOR BUILDING
RADWASTE BUILDING
K-2202
LR SYSTEM BOUNDARY BREAKS
DWM = DEMINERALIZED WATER MAKEUP
FPC = FUEL POOL COOLING AND FILTER DEMINERALIZER
IN SCOPE COMPONENTS PER 54.4(a)(1), AND 54.4(a)(3)
IN SCOPE COMPONENTS PER 54.4(a)(2)
OUT OF SCOPE COMPONENTS
REV DATE DESCRIPTION PREP. REVR. APPR.
0 10/15/02 INITIAL ISSUE RMD JSL MAH
LICENSE RENEWAL BOUNDARY DIAGRAM OF FUEL POOL COOLING PIPING
Exelon. Nuclear
Dresden Station 12
LR-DRE-M-31

C15

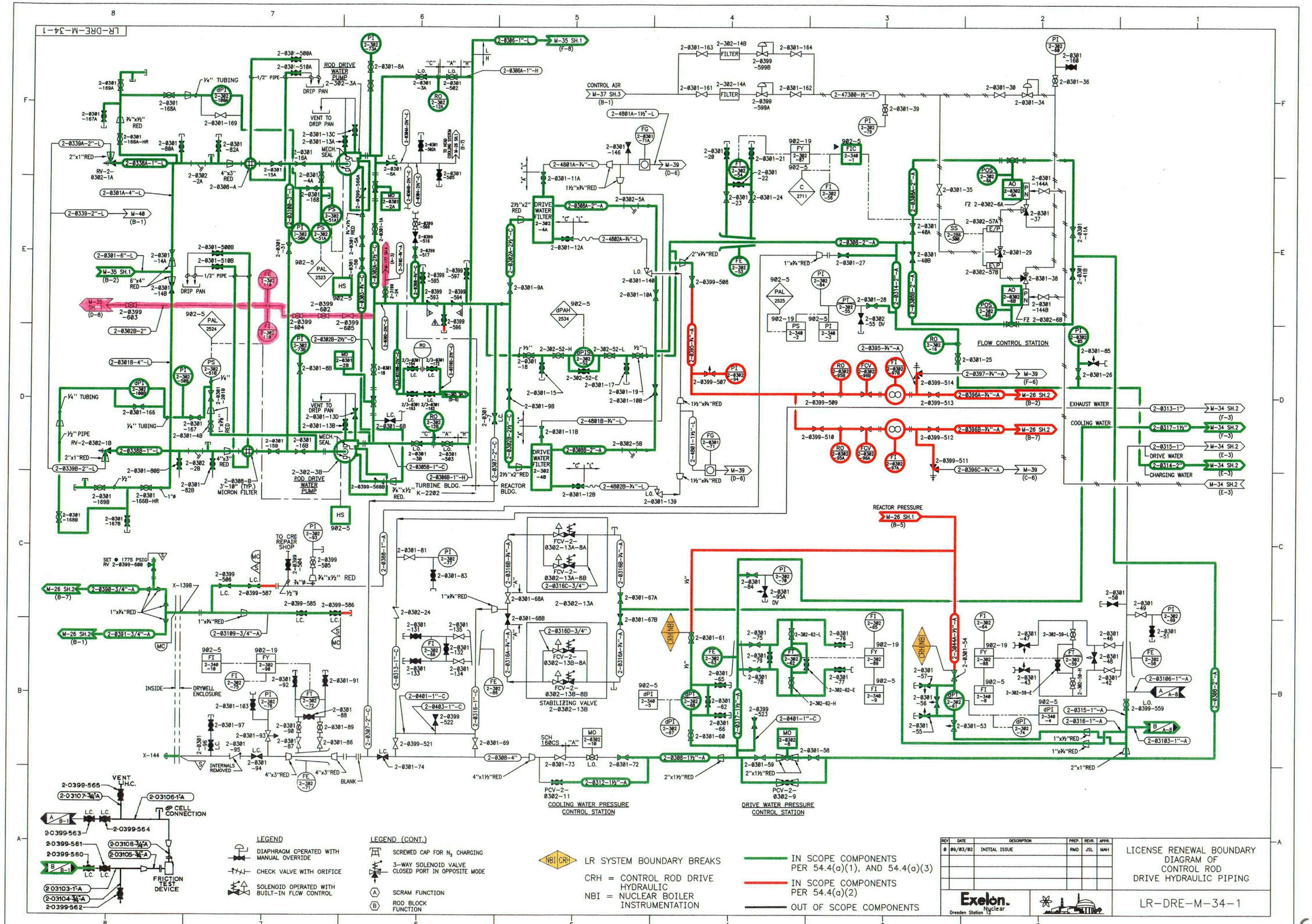
LR-DRE-M-34-1
ROD DRIVE WATER PUMP
DRIP PAN
VENT TO DRIP PAN
MECH. SEAL
TURBINE BLDG.
REACTOR BLDG.
CONTROL AIR
FILTER
DRIVE WATER FILTER
FLOW CONTROL STATION
EXHAUST WATER
COOLING WATER
DRIVE WATER
CHARGING WATER
REACTOR PRESSURE
DRYWELL ENCLOSURE
INSIDE
INTERNALS REMOVED
TO CRD REPAIR SHOP
MICRON FILTER
STABILIZING VALVE
COOLING WATER PRESSURE CONTROL STATION
DRIVE WATER PRESSURE CONTROL STATION
dP CELL CONNECTION
FRICTION TEST DEVICE
LEGEND
DIAPHRAGM OPERATED WITH MANUAL OVERRIDE
CHECK VALVE WITH ORIFICE
SOLENOID OPERATED WITH BUILT-IN FLOW CONTROL
LEGEND (CONT.)
SCREWED CAP FOR N2 CHARGING
3-WAY SOLENOID VALVE CLOSED PORT IN OPPOSITE MODE
SCRAM FUNCTION
ROD BLOCK FUNCTION
LR SYSTEM BOUNDARY BREAKS
CRH = CONTROL ROD DRIVE HYDRAULIC
NBI = NUCLEAR BOILER INSTRUMENTATION
IN SCOPE COMPONENTS PER 54.4(a)(1), AND 54.4(a)(3)
IN SCOPE COMPONENTS PER 54.4(a)(2)
OUT OF SCOPE COMPONENTS
REV | DATE | DESCRIPTION | PREP. | REVR. | APPR.
0 | 09/03/02 | INITIAL ISSUE | RMD | JSL | MAH
LICENSE RENEWAL BOUNDARY DIAGRAM OF CONTROL ROD DRIVE HYDRAULIC PIPING
Exelon. Nuclear
Dresden Station
LR-DRE-M-34-1

C16

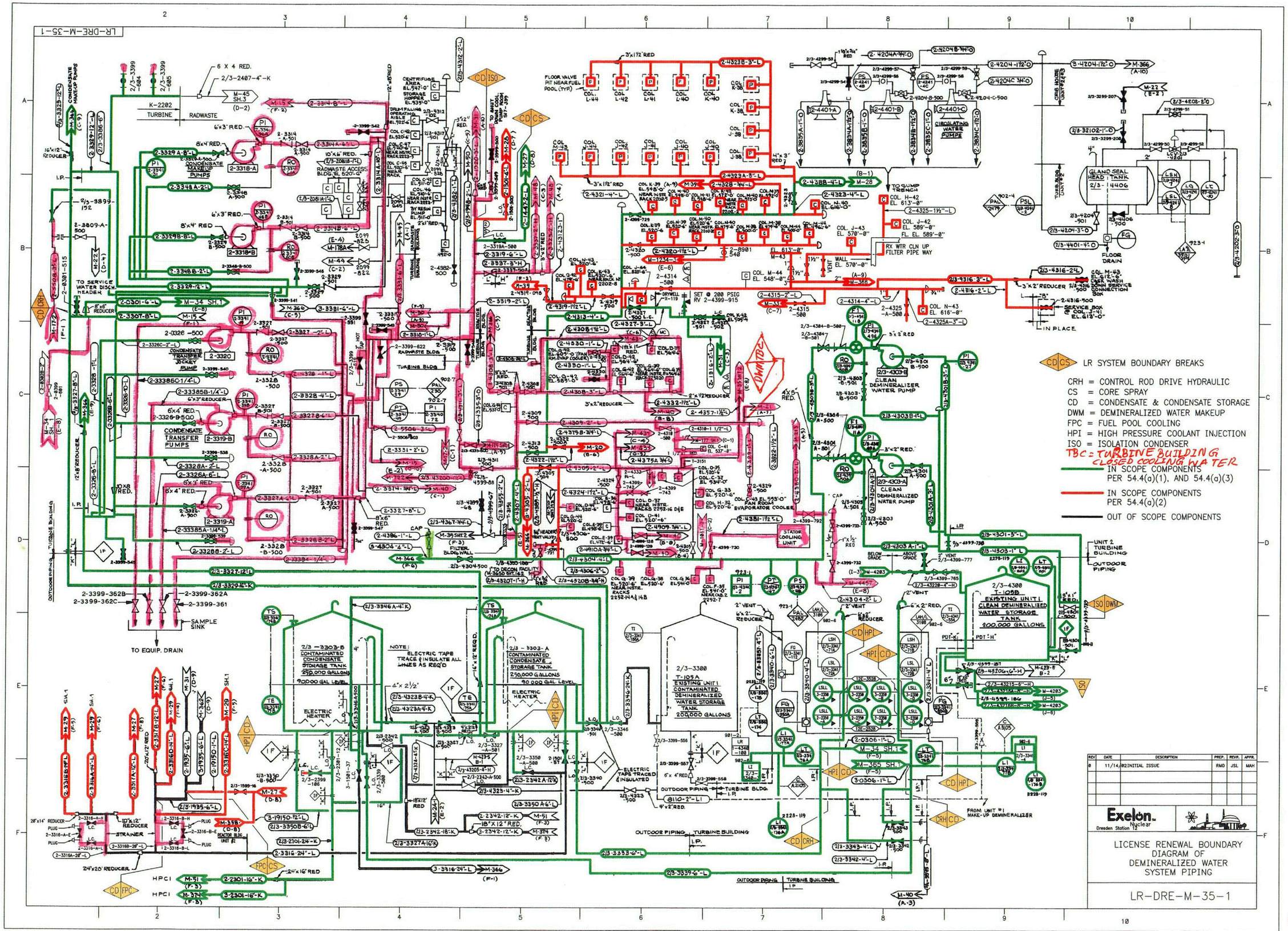
LR-DRE-M-35-1
CD CS LR SYSTEM BOUNDARY BREAKS
CRH = CONTROL ROD DRIVE HYDRAULIC
CS = CORE SPRAY
CD = CONDENSATE & CONDENSATE STORAGE
DWM = DEMINERALIZED WATER MAKEUP
FPC = FUEL POOL COOLING
HPI = HIGH PRESSURE COOLANT INJECTION
ISO = ISOLATION CONDENSER
TBC = TURBINE BUILDING CLOSED COOLING WATER
IN SCOPE COMPONENTS PER 54.4(a)(1), AND 54.4(a)(3)
IN SCOPE COMPONENTS PER 54.4(a)(2)
OUT OF SCOPE COMPONENTS
2/3-3303-B CONTAMINATED CONDENSATE STORAGE TANK 250,000 GALLONS
2/3-3303-A CONTAMINATED CONDENSATE STORAGE TANK 250,000 GALLONS
2/3-3300 T-105A EXISTING UNIT 1 CONTAMINATED DEMINERALIZED WATER STORAGE TANK 200,000 GALLONS
2/3-4300 T-105B EXISTING UNIT 1 CLEAN DEMINERALIZED WATER STORAGE TANK 200,000 GALLONS
CONDENSATE TRANSFER PUMPS
CONDENSATE MAKEUP PUMPS
CIRCULATING WATER PUMP
CLEAN DEMINERALIZER WATER PUMP
CLEAN DEMINERALIZED WATER PUMP
GLAND SEAL HEAD TANK 2/3-4406
FLOOR DRAIN
TO GUMP TRENCH
RX WTR CLN UP FILTER PIPE WAY
TO SERVICE WATER DISCH. HEADER
TO EQUIP. DRAIN
SAMPLE SINK
STRAINER
ELECTRIC HEATER
ELECTRIC TAPE TRACED & INSULATED
NOTE: ELECTRIC TAPE TRACE & INSULATE ALL LINES AS REQ'D
FROM UNIT #1 MAKE-UP DEMINERALIZER
UNIT 2 TURBINE BUILDING
OUTDOOR PIPING
TURBINE BUILDING
REV DATE DESCRIPTION PREP. REVR. APPR.
0 11/14/02 INITIAL ISSUE RMD JSL MAH
Exelon. Nuclear
Dresden Station 1/2
LICENSE RENEWAL BOUNDARY DIAGRAM OF DEMINERALIZED WATER SYSTEM PIPING
LR-DRE-M-35-1

C17

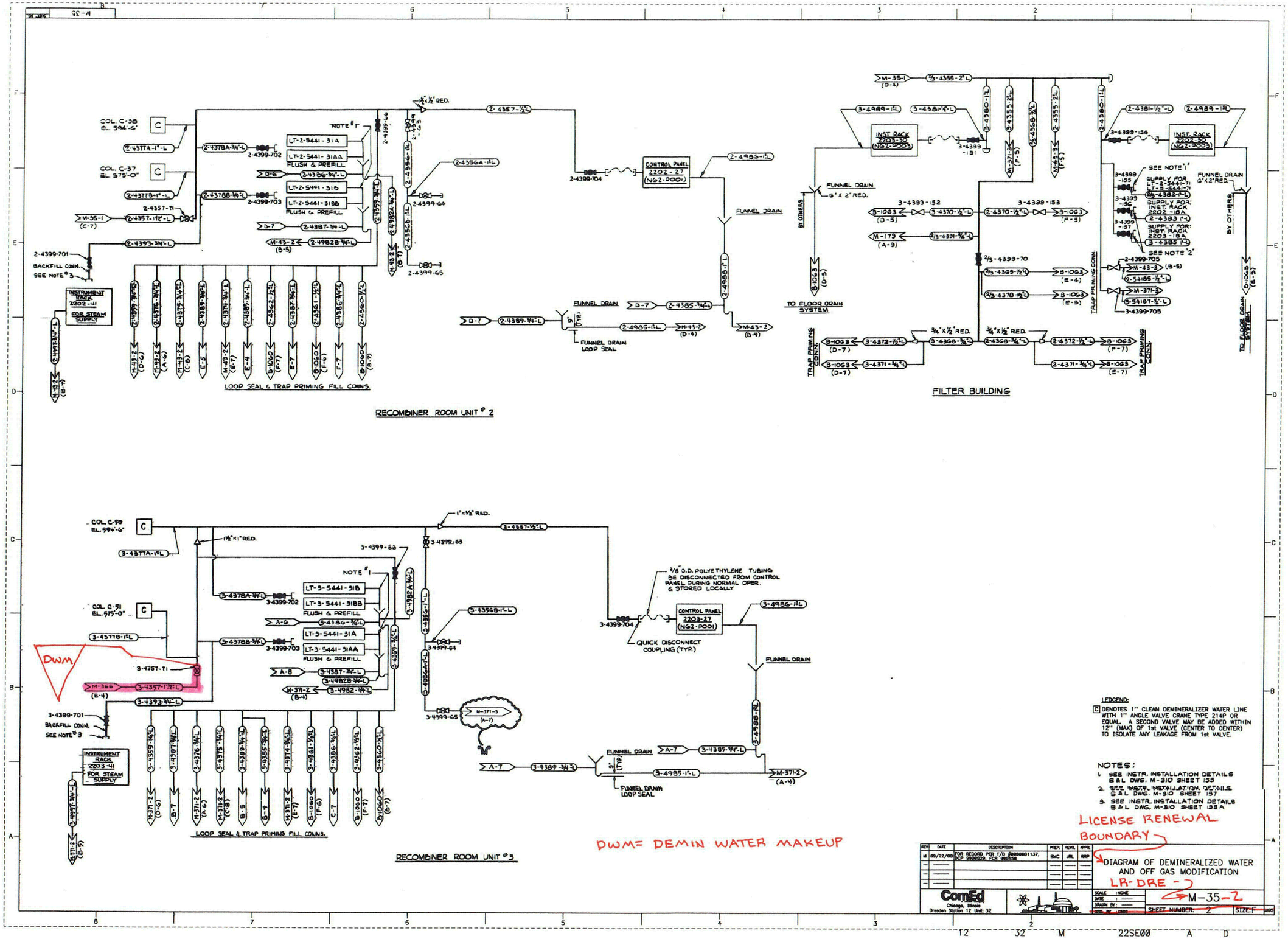

LEGEND:

C DENOTES 1" CLEAN DEMINERALIZER WATER LINE WITH 1" ANGLE VALVE CRANE TYPE 214P OR EQUAL. A SECOND VALVE MAY BE ADDED WITHIN 12" (MAX) OF 1st VALVE (CENTER TO CENTER) TO ISOLATE ANY LEAKAGE FROM 1st VALVE.

NOTES:

1. SEE INSTR. INSTALLATION DETAILS S & L DWG. M-310 SHEET 133
2. SEE INSTR. INSTALLATION DETAILS S & L DWG. M-310 SHEET 137
3. SEE INSTR. INSTALLATION DETAILS S & L DWG. M-310 SHEET 135 A

LICENSE RENEWAL BOUNDARY

REV	DATE	DESCRIPTION	PREP.	REVIL	APPR.
M	09/22/00	FOR RECORD PER T/D 00000031137, DCP 99080229, FCR 990158	SMC	JRL	RRP

ComEd
Chicago, Illinois
Dresden Station 12 Unit: 32

DIAGRAM OF DEMINERALIZED WATER AND OFF GAS MODIFICATION

LR-DRE -

M-35-2

SCALE : NONE
DATE : ——
DRAWN BY : ——
SHEET NUMBER: 2
SIZE: F

12 32 M 22SE00 A D

C18

LR-DRE-M-36

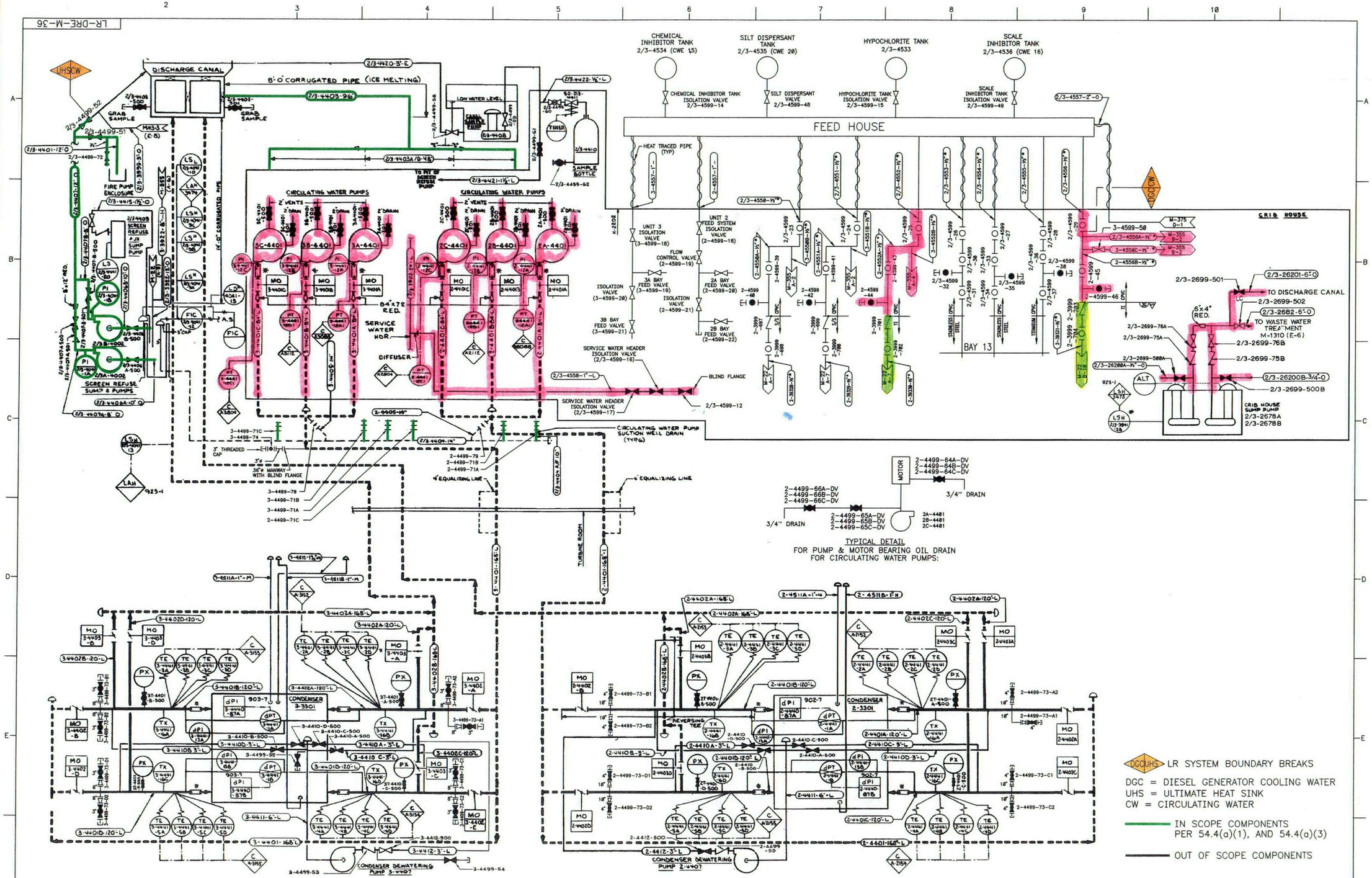

DGCUHS LR SYSTEM BOUNDARY BREAKS

DGC = DIESEL GENERATOR COOLING WATER
UHS = ULTIMATE HEAT SINK
CW = CIRCULATING WATER

IN SCOPE COMPONENTS PER 54.4(a)(1), AND 54.4(a)(3)

OUT OF SCOPE COMPONENTS

REV	DATE	DESCRIPTION	PREP.	REVR.	APPR.
0	09/04/02	INITIAL ISSUE	SP	JSL	MAH

Exelon. Nuclear
Dresden Station

LICENSE RENEWAL BOUNDARY DIAGRAM OF CIRCULATING WATER AND HYPOCHLORITE PIPING

LR-DRE-M-36

C19

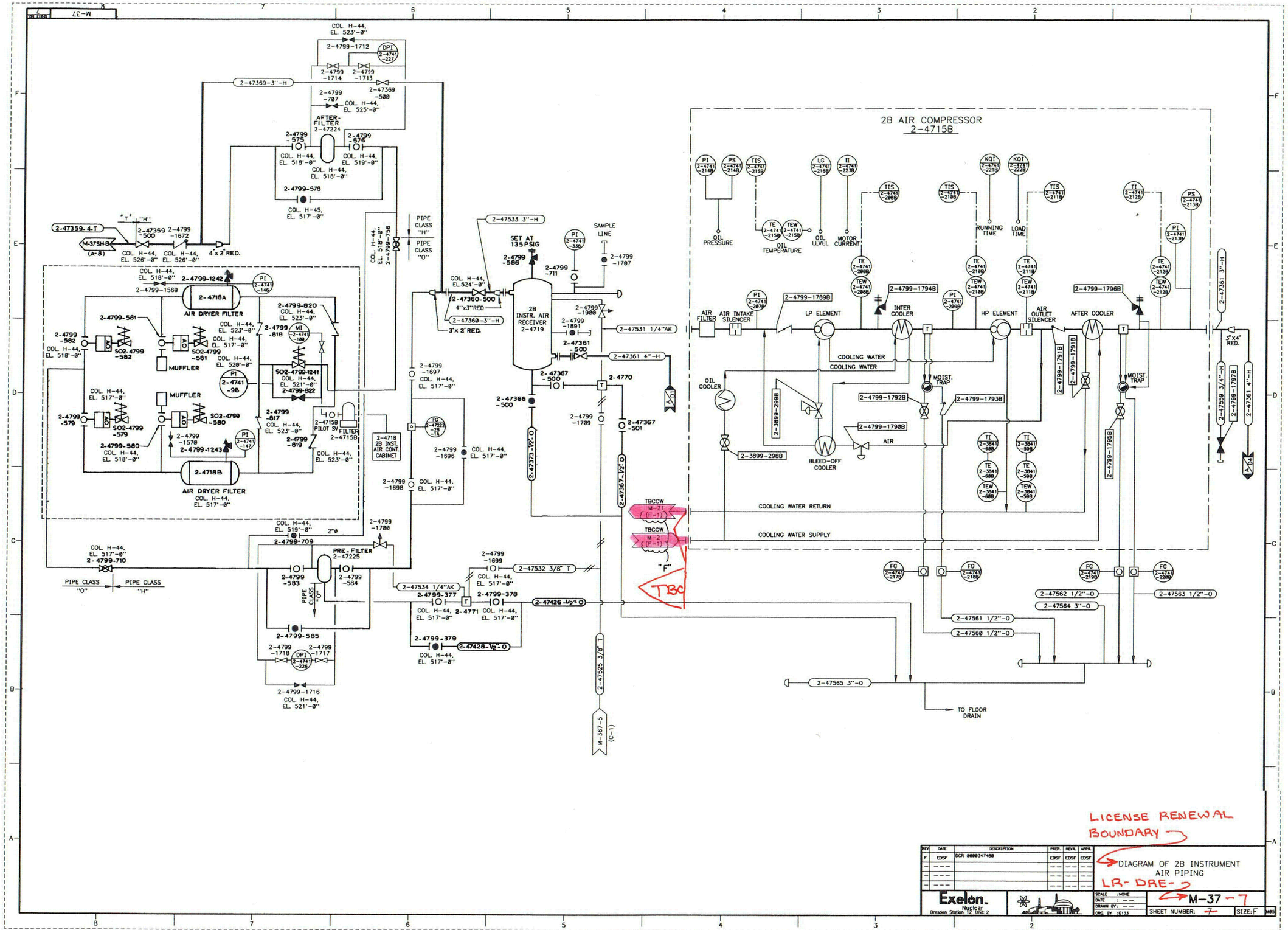
2B AIR COMPRESSOR
2-4715B
AIR DRYER FILTER
2-4718A
2-4718B
AFTER-FILTER
2-47224
PRE-FILTER
2-47225
2B INSTR. AIR RECEIVER
2-4719
SET AT 135 PSIG
AIR FILTER
AIR INTAKE SILENCER
LP ELEMENT
INTER COOLER
HP ELEMENT
AIR OUTLET SILENCER
AFTER COOLER
OIL COOLER
BLEED-OFF COOLER
MOIST. TRAP
COOLING WATER
COOLING WATER RETURN
COOLING WATER SUPPLY
TO FLOOR DRAIN
TBC
LICENSE RENEWAL BOUNDARY
DIAGRAM OF 2B INSTRUMENT AIR PIPING
LR-DRE-
M-37-7
Exelon. Nuclear
Dresden Station
SHEET NUMBER: 7
SIZE: F

C20

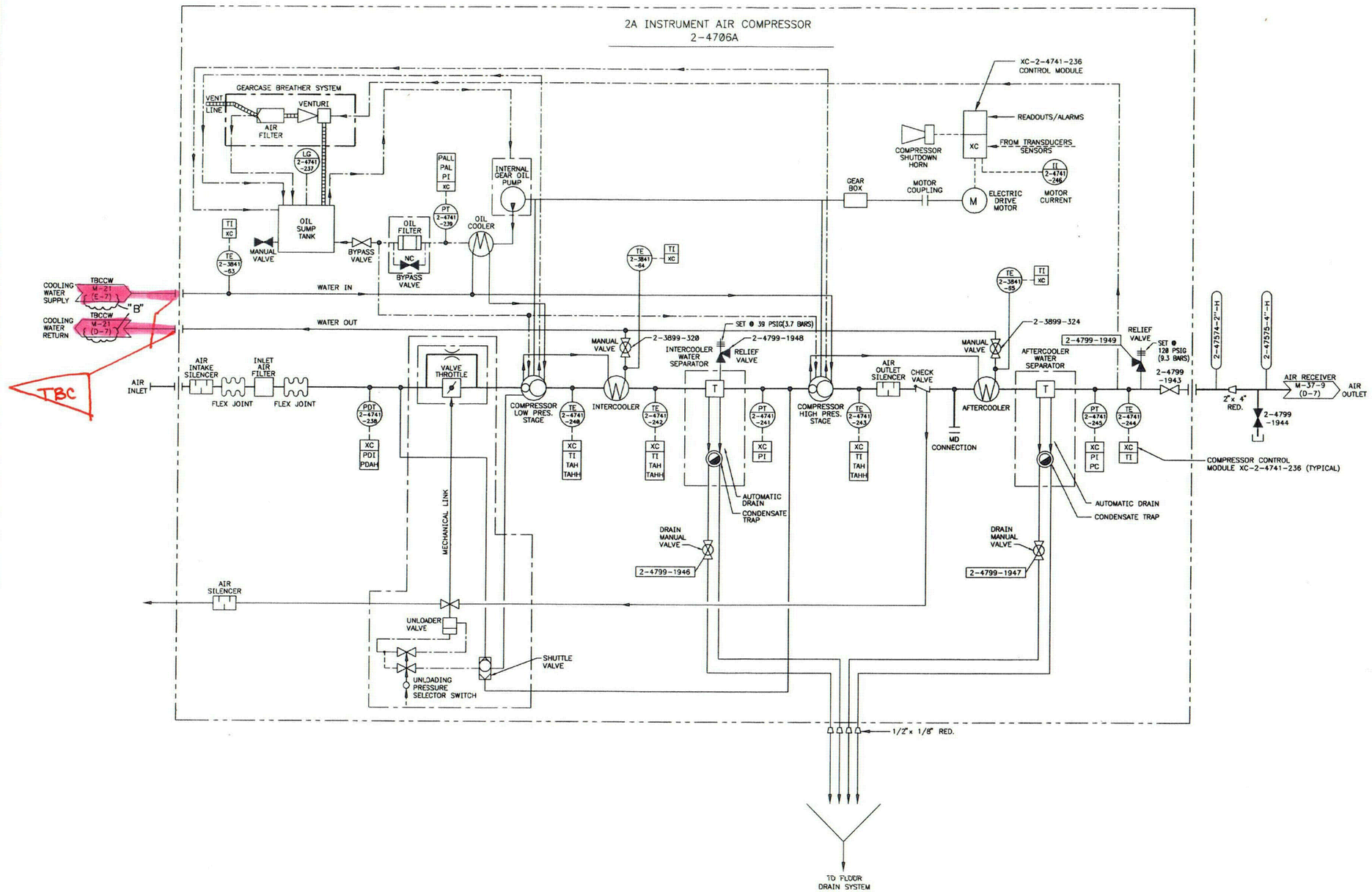

LICENSE RENEWAL BOUNDARY

REV	DATE	DESCRIPTION	PREP.	REVR.	APPR.
B	EDSF	DCR 000034788	EDSF	EDSF	EDSF

DIAGRAM OF 2A INSTRUMENT AIR PIPING

LR-DRE-

Exelon. Nuclear
Dresden Station 12 Unit 2

SCALE : NONE
DATE : --
DRAWN BY : --
ORG. BY : E133

M-37-10

SHEET NUMBER: ~~10~~ SIZE: F

C21

LR-DRE-M-41-1

TURBINE OIL RESERVOIR UNIT 1
7450 GALLON RESERVOIR OPERATING LEVEL
4000 GAL ADDITIONAL FLOW BACK TO RESERVOIR WHEN UNIT IS SHUT DOWN
425 GAL IN SEAL OIL SYSTEM INCL. SEAL OIL TANK
750 GAL IN TRAP DRAIN SYSTEM
12625 GAL TOTAL ESTIMATED TURBINE OIL LUBRICATING SYSTEM CAPACITY

TURBINE OIL RESERVOIR UNIT 2
7430 GALLON RESERVOIR OPERATING LEVEL
4000 GAL ADDITIONAL FLOW BACK TO RESERVOIR WHEN UNIT IS SHUT DOWN
425 GAL IN SEAL OIL SYSTEM INCL. SEAL OIL TANK
750 GAL IN TRAP DRAIN SYSTEM
12625 GAL TOTAL ESTIMATED TURBINE OIL LUBRICATING SYSTEM CAPACITY

TURBINE OIL FILTER PUMPS

TURBINE OIL FILTER PUMP 2-5107

FUEL OIL TRANSFER PUMP 2/3-5312

150,000 GAL FUEL OIL STORAGE TANK (BUNKER C)

DIRTY TURBINE OIL STORAGE 14000 GAL. 2/3-5102

CLEAN TURBINE OIL STORAGE 14000 GAL. 2/3-5101

TURBINE OIL TRANSFER PUMPS

HEATING BOILER DIESEL OIL START UP PUMPS

PROPANE TANKS 2/3-5211

RETIRED IN PLACE

LR SYSTEM BOUNDARY BREAKS

DO = DIESEL FUEL OIL

OUT OF SCOPE COMPONENTS

REV	DATE	DESCRIPTION	PREP.	REVR.	APPR.
0	11/13/82	INITIAL ISSUE	RMD	JSL	MAH

Exelon. Nuclear
Dresden Station 12

LICENSE RENEWAL BOUNDARY DIAGRAM OF TURBINE AND DIESEL OIL PIPING

LR-DRE-M-41-1

C22

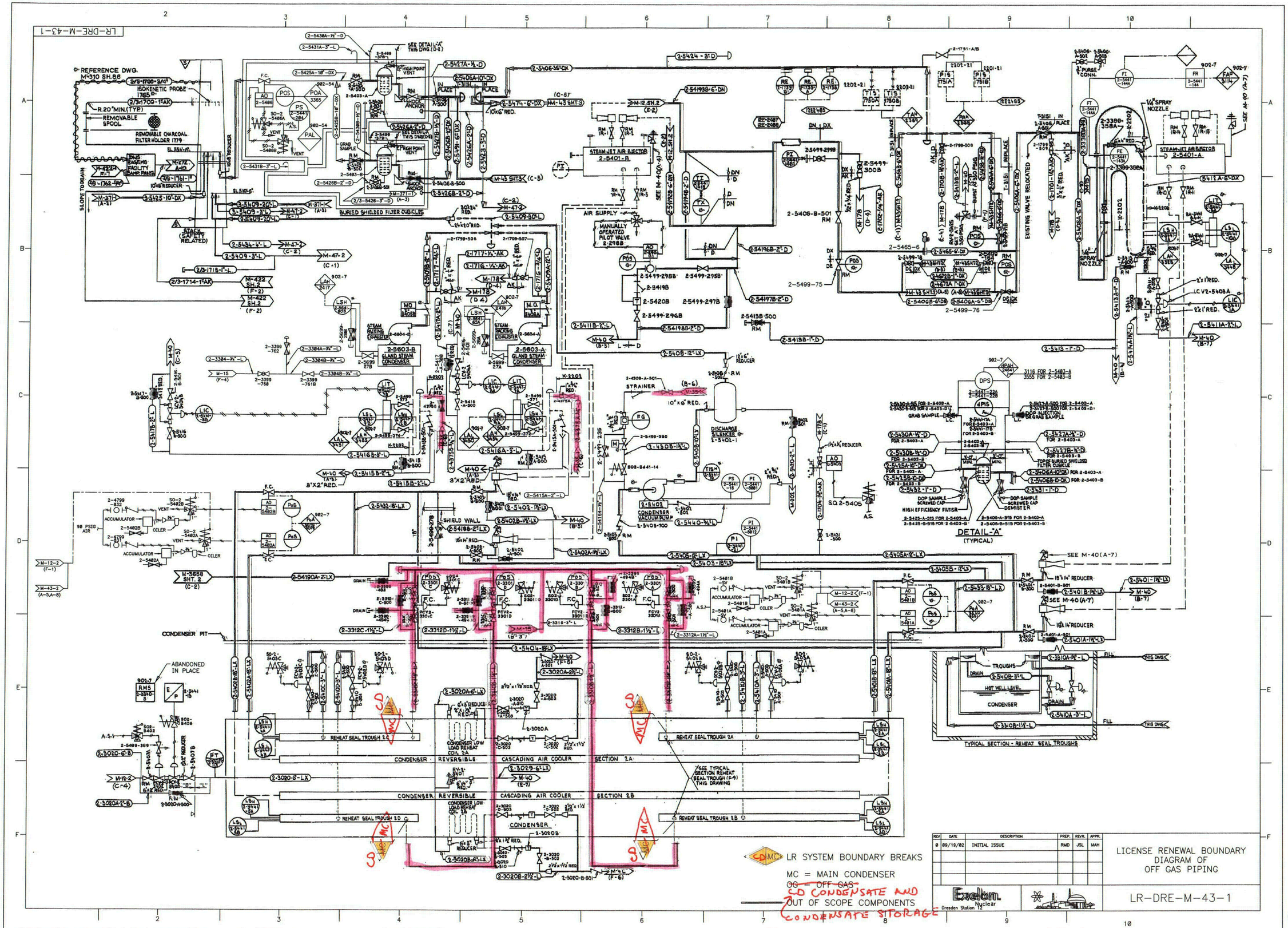

REV	DATE	DESCRIPTION	PREP.	REVR.	APPR.
0	09/19/02	INITIAL ISSUE	RMD	JSL	MAH

C23