10. IN SITU PRESSURE TESTING AND LEAK RATE ADJUSTMENTS

10.1 Introduction

In situ pressure tests are typically conducted at room temperature. Therefore adjustments are required to simulate both normal and accident conditions. Consequently, an engineering assessment shall be performed and maintained, or cited by reference, as part of the test record that demonstrates that the test is capable of producing the stress state at the flawed section of tubing which is equivalent to, or a conservative bound, of the actual stress state during normal operation and postulated accident conditions, multiplied by the appropriate factor of safety. The purpose of this Chapter is to provide information regarding the assessments required to simulate the effects of induced axial loads during accident events, the impact of temperature on material properties and the differences in thermal hydraulic conditions for leak rates at accident conditions (phase change and flashing) versus test conditions.

10.2 Induced Axial Loads

In situ pressure and leak rate tests for circumferentially oriented flaws shall consider the presence of axial loads during faulted MSLB event scenarios. These axial loads may result from either locked tubes in support plates for RSG designs, or from adverse tube-to-shell thermal differences in an OTSG. Locked tube adjustment factors to be applied to in situ test pressures are tooling and generator design specific and shall be coordinated with information from the original NSSS supplier and the in situ testing vendor. When evaluating the locked tube corrections, the tool design and operational characteristics, as well as the steam generator design and geometry can affect the correction to be applied. The user should verify with the in situ vendor that the corrections are adequately modeled. The applied end cap load should equal the end cap load developed by the limiting loading condition or the leak test condition times the applicable cross sectional area of the tube.

Different lengths of tubing between locking points and differences in material properties will impact the correction factor. For example, in [24], for CE plant tubing, using a localized tool which can generate axial forces, it is shown that a correction factor of 1.09 is bounding for a 47 inch span, while for the 27 inch span the correction factor increases to 1.13. A factor of 1.15 is expected to be generally bounding. Conversely, for a full tube pressure test with locking at the first support, the required correction factor is 1.78.

Section 9 contains information to support the evaluation of in situ tooling capable of simulating axial loading for proof testing. For leak rate adjustments, the evaluator should consider the effect of the axial load on the crack opening area when developing thermal hydraulic conversion factors.

10.3 Temperature Adjustment

To extrapolate proof test results from ambient in situ test conditions to service conditions, a correction for temperature effects on the flow stress of the tubing is required. From the EPRI Flaw Handbook [4] it can be noted that the dimensionless (normalized) burst pressure equation can be written in general form as:

$$P_N = \frac{1}{2}\frac{P_B}{\sigma_f}\frac{R_m}{t} = f(flaw\ geometry) \qquad \text{Eq. (10-1)}$$

where:

P_B	=	burst pressure	[psi]
R_m	=	tube mean radius	[in]
σ_f	=	flow stress	[psi]
t	=	tube wall thickness	[in]

Both the tube and flaw geometries are considered to be the same for both the hot and cold conditions, which means that if the dimensionless burst pressure is to be the same under both hot and cold conditions, then

$$P_{BC} = \frac{\sigma_{fC}}{\sigma_{fH}} P_{BH} \qquad \text{Eq. (10-2)}$$

where the subscripts C and H refer to the cold and hot conditions respectively.

Consequently, the hot pressure differential of interest must be multiplied by the ratio σ_{fC}/σ_{fH}, to determine the equivalent cold test pressure. Table 10-1 provides this correction factor for several types of tubing. The flow stress values have been obtained from [4].

Table 10-1
Material Property Corrections for Testing at Room Temperature to MSLB Conditions

Tube Description	MSLB Temperature	σ_{fC}/σ_{fH}
3/4" Mill Annealed 0.043" Westinghouse	650	1.079
3/4" Mill Annealed 0.048" ABB	620	1.078
3/4" Mill Annealed 0.042" ABB	620	1.076
3/4" Thermally Treated 0.043" Westinghouse	650	1.139
7/8" Mill Annealed 0.050" Westinghouse	650	1.097
7/8 Thermally Treated 0.050 Westinghouse	650	1.139
11/16" Mill Annealed 0.040" Westinghouse	650	1.091
11/16" Thermally Treated 0.040" Westinghouse	650	1.139
5/8" Stress-relieved OTSG Tubing (0.034" min. wall)	605	1.091

10.4 Adjustments of In situ Measured Leak Rates

In situ leak testing is normally performed at room temperature (~70°F) and the results are applied to one or more accident condition pressure differentials. Therefore, in situ leak rates must be corrected to accident conditions for comparison to the specified limits. The calculated accident induced leak rate should be compared to the performance criteria of NEI 97-06 [1].

The extrapolation of room temperature test results to actual conditions of interest requires an understanding of the applicable phenomena and their governing parameters. For leakage these are the crack opening area, and the thermal hydraulic conditions for the flow. The importance of this conversion is highlighted in NRC Information Notice 97-79 [7].

The general approach for scaling is to use available mathematical models to extrapolate results from known conditions to other ones of interest. By having experimental data at one particular condition, it is possible to make the mathematical model fit the data exactly at that point. The model can then be used to extrapolate for particular parameters while others remain constant. The approach that is followed here is to ratio the applicable equations at the conditions of interest (hot), with the measured conditions (cold). This approach allows a determination of the appropriate adjustment factors for the quantities of interest.

The adjustment is performed as shown here, with the details provided in the next section. First the cold temperature test pressure is determined by Equation 10-2 or Table 10-1. The leakage mass flow ratio is:

$$\frac{M_H}{M_C} = \frac{A_H}{A_C}\frac{G_H}{G_C} \qquad \text{Eq. (10-3)}$$

where:

M	=	mass flow rate	[lb/s]
A	=	crack opening area	[in^2]
G	=	mass flux	[lb/s in^2]

And the subscripts C and H refer to cold and hot conditions respectively.

The crack opening area ratio, when the pressure ratio is chosen according to Eqn. 10-2 is:

$$\frac{A_H}{A_C} = \frac{\sigma_{fH}}{\sigma_{fC}}\frac{E_C}{E_H} \qquad \text{Eq. (10-4)}$$

where:

σ_f	=	flow stress	[psi]
E	=	Young's Modulus	[psi]

For the case where $A_H/A_C \sim 1$, the mass flux ratio becomes:

$$\frac{G_H}{G_C} = \left\{\frac{\left[P_{0H} - P_S(T_{0H})\right]}{\left[P_{0C} - P_S(T_{0C})\right]}\frac{\rho_s(T_{0H})}{\rho_s(T_{0C})}\right\}^{\frac{1}{2}} \qquad \text{Eq. (10-5)}$$

where:

G	=	mass flux	[lbs/s in^2]
$P_S(T_0)$	=	saturation pressure at temperature (T_0)	[lbs/in^2]
P_0	=	pipe internal pressure	[psi]
ρ	=	density	[lbs/in^3]
$\rho_s(T_0)$	=	saturated liquid density at temperature (T_0)	[lbs/in^3]
T_0	=	internal fluid temperature	[^oF]

The volumetric leakage flow, Q, can be obtained from the mass flow rate by dividing by the appropriate density.

$$Q = M/\rho \qquad \text{Eq. (10-6)}$$

For the volumetric leakage flow at room temperature conditions, the density at room temperature is used. For the accident conditions the hot density is used.

10.5 Basis for the Leakage Rate Adjustments

Several experimental results and calculation methods appear in the literature for flow through cracks under conditions of high pressure [20], [21], [22]. The motivation generally has been to provide the ability to predict primary to secondary leakage flow in steam generators.

Most of the calculation methods are fairly simplistic, and are amenable to hand calculations, though a computer code, PICEP [8], has been developed to utilize more detailed elastic/plastic pipe deformation and two phase fluid flow models.

The experimental database used to validate the available models is sparse, and is heavily weighted to relatively large cracks. In addition, most of the data has been obtained for machined slits, for which the geometries are much easier to characterize than for real cracks. In spite of this the available data for small cracks has a great deal of scatter.

A crack leakage calculation consists of two steps. First a crack opening area is determined, which is then used with a thermal hydraulic model to calculate the flow.

The mass flow rate through the crack is given by,

$$M = AG \qquad \text{Eq. (10-7)}$$

Where:

M	=	mass flow rate	[lbs/s]
A	=	crack opening area	[in^2]
G	=	mass flux	[lb/s in^2]

First, the crack opening area, A, as a function of pressure, needs to be determined. This can be accomplished in a straightforward manner by using the EPRI Ductile Fracture Handbook [6] or the Steam Generator Tubing Burst Testing and Leak Rate Testing Guidelines [3].

The next sections describe the determination of the crack opening area for both axial and circumferential cracks.

10.5.1 Axial Cracks

The geometry and nomenclature for a single axial crack is provided in Figure 10-1.

The dimensionless crack half length, λ, is given by

$$\lambda = \frac{c}{\sqrt{Rt}} \qquad \text{Eq. (10-8)}$$

where:

c	=	crack half-length	[in]
R	=	tube mean radius	[in]
t	=	tube wall thickness	[in]

For a tube under internal pressure the effective dimensionless crack half length is:

$$\lambda_e = \frac{c_e}{\sqrt{Rt}} \qquad \text{Eq. (10-9)}$$

which can be determined [6] by solving:

$$\frac{c_e}{c} = \frac{\lambda_e}{\lambda} = 1 + \frac{F_m^2(\lambda_e)}{2}\left(\frac{\sigma}{\sigma_f}\right)^2 \qquad \text{Eq. (10-10)}$$

where:

σ	=	hoop stress	[lb/in^2]
σ_f	=	flow stress	[lb/in^2]

and the shell bulging factor, F_m, is defined as:

$$F_m(\lambda) = 1 + 0.072449\lambda + 0.648567\lambda^2 - 0.2327\lambda^3 + 0.038154\lambda^4 - 0.0023487\lambda^5 . \qquad \text{Eq. (10-11)}$$

Since,

$$\sigma = \frac{(P_0 - P_2)R}{t} \qquad \text{Eq. (10-12)}$$

where:

P_0	=	internal pressure	[lb/in^2]
P_2	=	external pressure	[lb/in^2]

The effective crack length, c_e, can be obtained for any particular pressure difference by iteration of equation 10-10, starting with the initial estimate of:

$F_m(\lambda_e) = F_m(\lambda)$.

Once the effective crack length has been determined, the crack opening area is given by

$A = 2\pi c_e^2 V_o \sigma / E$ Eq. (10-13)

where:

$V_o = 1.0 + 0.64935\ \lambda_e^2 - 8.9683\text{x}10^{-3}\ \lambda_e^4 + 1.33873\text{x}10^{-4} \lambda_e^6$ Eq. (10-14)

and

E = Young's Modulus [lb/in^2].

10.5.2 Circumferential Crack

The geometry for a single circumferential crack is given in Figure 10-2.

The crack half angle θ is used to define λ

$\lambda = \theta\ (R/t)^{0.5}$ Eq. (10-15)

The effective crack half angle, adjusted for plastic zone size, can be determined [6] by solving:

$$\frac{\theta_e}{\theta} = \frac{\lambda_e}{\lambda} = \left[1 + \frac{F_m^2(\lambda_e)}{2}\left(\frac{\sigma}{\sigma_y}\right)^2\right] \quad \text{Eq. (10-16)}$$

where:

σ_y = Material Yield stress

$F_m(\lambda) = 1 + 0.1501\lambda^{3/2}$ for $0 \le \lambda \le 2$ Eq. (10-17a)

or

$F_m(\lambda) = 0.8875 + 02625\lambda$ for $2 \le \lambda \le 5$ Eq. (10-17b)

The calculation is again an iterative one, where λ and F_m are updated using a new θ_e in place of θ, (Eqns. 10-15, 10-17) and the updated F_m is used to calculate a new θ_e from Eqn. 10-16.

The equation for the crack opening area is given in [6] as,

$$A = 2\pi Rt \times B_7 \times \frac{\sigma}{E} \qquad \text{Eq. (10-18)}$$

where:

$$\sigma = P_0 R/2t \qquad \text{Eq. (10-19)}$$

$$B_7 = \lambda^2 + 0.16\lambda^4 \quad \text{for } 0 \le \lambda \le 1 \qquad \text{Eq. (10-20a)}$$
$$B_7 = 0.02 + 0.81\lambda^2 + 0.30\lambda^3 + 0.03\lambda^4 \quad \text{for } 1 \le \lambda \le 5 \qquad \text{Eq. (10-20b)}$$

10.5.3 Flow rate

Most crack flow models, for a subcooled inlet flow, are of the following general form:

$$G = \sqrt{\frac{2g\rho(P_0 - P_2)}{(1+\xi)}}. \qquad \text{Eq. (10-21)}$$

For the current calculations we use the form suggested by Pana, as described in [20],

$$G = \sqrt{\frac{2g\rho_S(T_0)[P_0 - P_S(T_0)]}{(1+\xi)}} \qquad \text{Eq. (10-22)}$$

where:

G	=	mass flux	[lb/hr in^2]
g	=	gravitational constant	[in/s^2]
P_2	=	tube external pressure	[lb/in^2]
$P_S(T_0)$	=	saturation pressure at temperature T_0	[lb/in^2]
ρ	=	density	[lb/in^3]
$\rho_s(To)$	=	saturated liquid density at temperature T_0	[lb/in^3]
T_0	=	internal fluid temperature	[^{o}F]
ξ	=	overall friction coefficient	[dimensionless]

The overall friction coefficient is given by:

$$\xi = 0.5 + \frac{t}{d_H}\left(3.39\log\frac{d_H}{R_f} - 0.866\right)^{-2} \qquad \text{Eq. (10-23)}$$

where:

t	=	wall thickness	[in]
d_H	=	hydraulic diameter of the crack	[in]
R_f	=	crack wall surface roughness	[in]

The wall surface roughness is a difficult parameter to determine. Most experiments have been performed in the range of 1×10^{-5} to 1.5×10^{-3} in. A convenient value that has commonly used [3] is 2×10^{-4} in.

10.5.4 Scaling Analysis

For leakage scaling analysis we take the ratio of the hot scaled mass flow over the cold test mass flow. The subscripts C and H refer to the cold test and hot reference conditions respectively.

$$\frac{M_H}{M_C} = \frac{A_H}{A_C}\frac{G_H}{G_C} \qquad \text{Eq. (10-24)}$$

and using Eqn. 10-13 for axial cracks

$$\frac{A_H}{A_C} = \left(\frac{c_{eH}}{c_{eC}}\right)^2 \frac{V_{0H}}{V_{0C}}\frac{\sigma_H}{\sigma_C}\frac{E_C}{E_H} \qquad \text{Eq. (10-25)}$$

and Eqn. 10-18 for circumferential cracks

$$\frac{A_H}{A_C} = \frac{B_{7H}}{B_{7C}}\frac{\sigma_H}{\sigma_C}\frac{E_C}{E_H} \qquad \text{Eq. (10-26)}$$

and Eqn. 10-22

$$\frac{G_H}{G_C} = \left\{\frac{\left[P_{0H} - P_S(T_{0H})\right]}{\left[P_{0C} - P_S(T_{0C})\right]}\frac{\rho_s(T_{0H})}{\rho_s(T_{0C})}\frac{\left[1+\xi_H\right]}{\left[1+\xi_C\right]}\right\}^{\frac{1}{2}} \qquad \text{Eq. (10-27)}$$

If temperatures and pressures can be specified for both the test and reference conditions, it is possible to determine the relative mass flow rates, M_H/M_C.

When tests are performed on a model system rather than on the real one, it is desirable that the model system response be as close to the prototypic one as possible. For a cracked tube at cold temperature to represent one at hot temperature a good choice would be to have the effective length of the cracks to be the same for both the cold and the hot conditions. From Eqn. 10-2, it can be seen that this could be accomplished by running the test in such a manner that the ratio of the tube stress to the flow stress is the same for both the model and the prototype. This means that

$$\frac{\sigma_C}{\sigma_{fC}} = \frac{\sigma_H}{\sigma_{fH}} \qquad \text{Eq. (10-28)}$$

which results in the following choice for the test pressure given by

$$\frac{P_C}{P_H} = \frac{\sigma_{fC}}{\sigma_{fH}} \qquad \text{Eq. (10-29)}$$

For this choice:

$\lambda_{eC} = \lambda_{eH}$

$c_{eC} = c_{eH}$

and therefore

$V_{0C} = V_{0H}$

and therefore, 10-25 reduces to:

$$\frac{A_H}{A_C} = \frac{\sigma_{yH}}{\sigma_{yC}} \frac{E_C}{E_H} \qquad \text{Eq. (10-30)}$$

This means that the crack area ratio depends only upon the properties of the tube material at the two temperatures. If the area ratio is close to one, the overall friction coefficients will also be close, and the mass flux scaling factor will depend only on the thermodynamic conditions. This means that the crack flow scaling factors will be independent of the crack geometry.

For circumferential cracks the choice of pressure ratio given by 10-29 yields:

$\theta_{eH} = \theta_{eC}$

and consequently

$B_{7H} = B_{7C}$

Therefore, the crack opening area ratio becomes:

$$\frac{A_H}{A_C} = \frac{\sigma_{yH}}{\sigma_{yC}} \frac{E_C}{E_H}$$

which is identical to that for axial cracks, and is seen to be independent of the crack geometry. The crack leakage scaling factor can be obtained from Eqns. 10-24, 10-27, and 10-30.

10.6 Example Calculation

Let us look at the case where a test is run at room temperature to simulate MSLB conditions. For this situation, P_{0H} = 2500 lbs/in^2, T_{0H} = 620ºF, and T_{0C} = 70ºF.
For ¾" Mill Annealed 0.048" ABB Alloy 600 tubing Table 10-1 gives

$\sigma_{fC}/\sigma_{fH} = 1.078$

From [23],

$E_{70} = 31.0 \times 10^6$ psi

$E_{620} = 28.6 \times 10^6$ psi

Using Eqn. 10-2,

$$\frac{P_{0C}}{P_{0H}} = 1.078$$

and the required testing pressure at room temperature is

$P_{0C} = 2695$ lb/in^2

Using Eqn. 10-4, the area ratio is simply

$$\frac{A_H}{A_C} = \frac{1}{1.078} \times \frac{31.0}{28.6} = 1.0054$$

which is very close to one. Since for this case the flow areas are almost equal, the friction factors are essentially the same and, Eqn 10-5 becomes:

$$\frac{G_H}{G_C} = \left\{ \frac{\left[P_{0H} - P_S(T_{0H})\right]}{\left[P_{0C} - P_S(T_{0C})\right]} \frac{\rho_s(T_{0H})}{\rho_s(T_{0C})} \right\}^{\frac{1}{2}}$$

$$\frac{G_H}{G_C} = \left\{ \frac{\left[2500 - 1787\right]}{\left[2695 - 0.4\right]} \frac{40.55}{62.50} \right\}^{\frac{1}{2}} = 0.414$$

and finally using Eqn 10-3 we get

$$\frac{M_H}{M_C} = 0.416$$

Therefore the leakage mass flow rate measured in the room temperature test needs to be multiplied by 0.416 to obtain the MSLB leakage mass flow rate.

The volumetric flow rate, Q, is just given by

$$Q = \frac{M_H}{\rho}$$

where ρ is the density for the conditions where the volumetric flow is desired.

To obtain the volumetric flow rate under the MSLB conditions the density at 620ºF and 2500 psi (40.55 lb/ft^3) needs to be used.

To obtain the room temperature and pressure volumetric flow rate for MSLB, the density at 70ºF and 14.7 psia (62.50 lb/ft^3) needs to be used.

To convert the volumetric flow result from the room temperature test to the room temperature volumetric flow for the MSLB condition, the measured volumetric flow is just multiplied by 0.416.

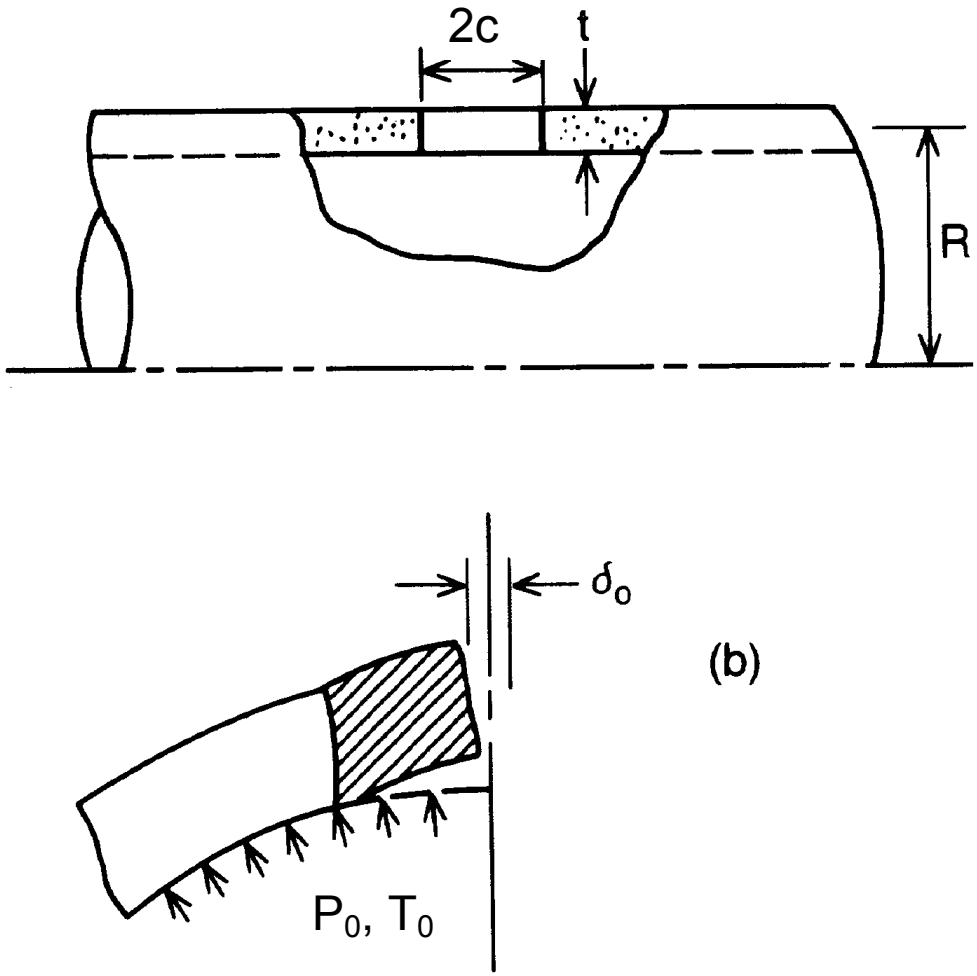

Figure 10-1. Pipe Axial Crack Geometry

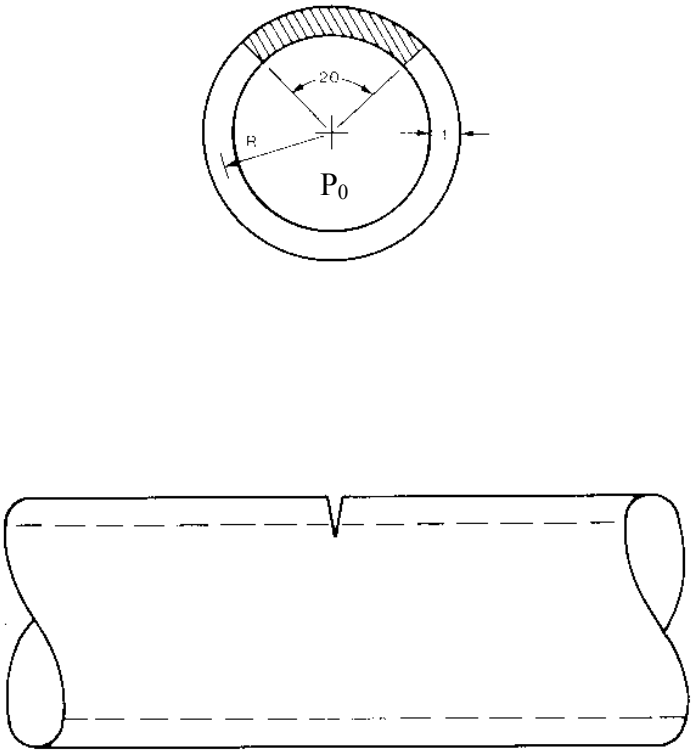

Figure 10-2. Pipe Circumferential Crack Geometry