AECL
TECHNOLOGIES INC.

May 20, 2004

Our File: 108US-01321-021-001
Your File: Project No. 722

U.S. Nuclear Regulatory Commission,
Document Control Desk,
Washington, D.C. 20555

Attention: Ms. B. Sosa
Project Manager, ACR

References:
1. E-mail B. Sosa to V. Langman, "Request for References", April 26, 2004.
2. Letter V. Langman to B. Sosa, "Request for References Related to the ACR-700 Thermal Hydraulic Technology Base", May 19, 2004.

Re: **Request for References Related to the ACR-700 Thermal Hydraulic Technology Base – Publicly Available Documentation**

In response to NRC's request (Reference 1) and as committed in Reference 2, and in support of the NRC's pre-application review of the ACR-700 (i.e., specifically focus topic #12 – ACR Technology Base), please find enclosed paper copies of the following two documents:

- Barclay, F. W., and Krishnan, V. S., "Filling of Parallel Heated Channels from Headers with Nearly Equal Pressures", 10th Simulation Symposium on Reactor Dynamics and Plant Control.
- Buell, J.R., and Kowalski, J.E.,"An Analysis of Refill Tests Conducted in the Modified Cold-Water Injection Test Facility", CNS/CNA Annual Conference, 1994.

If you have any questions on this letter and/or the enclosed material please contact me at (905) 823-9060 extension 6543.

Yours sincerely,

Vince Langman

Vince J. Langman
ACR Licensing Manager

/Enclosures:
1. Paper copies of the two documents listed in this letter

D070

FILLING OF PARALLEL HEATED CHANNELS FROM HEADERS WITH NEARLY EQUAL PRESSURES

by

F.W. Barclay and V.S. Krishnan

Atomic Energy of Canada Limited
Whiteshell Nuclear Research Establishment
Pinawa, Manitoba R0E 1L0

ABSTRACT

Some postulated loss-of-coolant accident (LOCA) scenarios in CANDU-PHW reactors involve extended periods of low differential pressure between the headers to which channels in the stagnant core pass are connected. An assessment of the system behaviour in such circumstances requires an understanding of the mechanics of channel filling processes.

A large number of tests have been performed in the Cold-Water Injection Test (CWIT) facility to study refilling of horizontal heated channels and their feeders at full reactor scale. For single-channel tests in which the initial header pressures are nominally equal, it has been observed that refilling may be initiated from either side, but once started, it proceeds unidirectionally, with no flow reversals or counter-current flow patterns. For parallel-channel tests under similarly balanced header conditions, refilling of the two channels invariably proceeds in opposite directions, and after refilling is complete, flow persists in both channels, again in opposite directions.

A mechanism is proposed in this paper to explain these observations. In addition, it is shown that this mechanism is consistent with results obtained in a series of channel-bypass experiments conducted in the CWIT facility. In these experiments, the upper channel was replaced by an empty pipe, which provided a low-resistence flow path in parallel with the heated channel. The effect on channel refill behaviour of various degress of imbalance between header pressures was investigated and is discussed here. Finally, the possible application to the many-channel reactor system of the proposed parallel-channel filling mechanism is discussed.

Paper to be presented at the 10th Simulation Symposium on Reactor Dynamics and Plant Control

FILLING OF PARALLEL HEATED CHANNELS FROM HEADERS WITH NEARLY EQUAL PRESSURES

1. INTRODUCTION

One of the principal objectives of reactor loss-of-coolant accident (LOCA) analysis is to show with a high degree of confidence that the action of a properly functioning emergency coolant injection (ECI) system will provide timely and adequate heat removal from the reactor core in the event of any postulated rupture of a primary heat transport system (PHTS) pipe [1]. For CANDU reactors, this generally means showing through calculations, supported to the extent possible by experimental data, that ECI water will enter each channel in time to prevent severe fuel damage.

Since it is quite impractical, and generally unnecessary, to attempt to model each channel individually, the usual approach has been to model an "average" channel to obtain the bulk core behaviour and a "hot" channel to determine the expected extremes of both fuel temperature and time to rewet. No hydraulic interactions between these two "channels" are considered. This approach is satisfactory provided that the pressure gradient through each core pass is sufficient to maintain the dominance of inertial over gravitational forces. This is not always the case, however, and some postulated LOCA scenarios in CANDU-PHW reactors involve extended periods of low differential pressure between headers [2].

The behaviour of individual channels in low pressure drop situations has not been studied in detail, partly because existing LOCA analysis codes lack the sophistication needed to model separated two-phase flows in parallel channels with sufficient accuracy, and partly because the mechanics of channel refilling processes under predominantly gravitational forces have not been well enough understood to permit a sound phenomenological approach to the problem. This paper addresses the need for better understanding of refilling phenomena. The results of experiments conducted in a large scale injection test facility under conditions of low header-to-header pressure drop [3-5] are examined for significant behavioural trends. A mechanism is then proposed which accounts for the events observed in tests with nominally zero pressure difference between headers. It is also consistent with results obtained in a series of channel bypass experiments [6] in which the effect on channel refill behaviour of various degrees of imbalance between header pressures was examined. Finally, the possible application to the many-channel reactor system of the proposed parallel-channel filling mechanism is discussed.

2. CWIT FACILITY DESCRIPTION AND TEST PROCEDURE

Figure 1 shows a schematic of the Cold Water Injection Test (CWIT) facility. Each of the two horizontal channels consists of a 6-m long, 100-mm diameter flow tube containing a 6-m long bundle of thirty-seven heated 13-mm diameter rods. The top channel is located 5 metres above, and

parallel to, the bottom channel. The channels are connected to inlet and outlet headers, located 10 metres above the bottom channel, by 50-mm and 75-mm diameter steel pipes. A water injection system, controlled to give a constant injection pressure of up to 4 MPa, is connected to both the inlet and outlet headers through a check valve.

In the tests to be described, the initial conditions were established by circulating dry pressurized steam to raise the temperature of the pipes to 300°C. The loop was then isolated with an internal pressure greater than the injection pressure. Next, electrical power was supplied to the rods. When their surfaces reached the desired temperature (usually 400°C), blowdown of the loop was initiated by opening a gas-actuated valve in the discharge line of each header. Water entered the headers when the loop pressure fell below the injection pressure. The loop depressurization and refilling rates were determined in part by the size of the orifice plate (break size) located downstream of the blowdown valve.

By using equally sized orifices in the injection lines to the headers, and in the discharge lines from the headers (symmetric tests), a low, near-zero header-to-header pressure drop could be maintained during the experiments. The symmetric tests conducted included both single-channel and parallel-channel tests [3-5]. Parallel-channel tests were also conducted in which the top channel was replaced by a 100-mm empty pipe [6]. In these 'bypass' tests the outlet header break size was varied relative to that of the inlet header. This was done to ensure that the header pressures were unequal.

During an experiment the following transient measurements were made:

- feeder pipework external surface temperature at various points. These provided information on the progress of water through the feeders.

- rod surface temperature, using thermocouples imbedded in the stainless steel sheaths. Typically 30 thermocouples, distributed throughout the rod bundles, were monitored to provide a detailed picture of the motion of the rewetting front.

- coolant density and flow regime, using single-beam gamma-ray densitometers located on vertical pipes close to the inlet and outlet of each channel

- injection flow rate, using calibrated venturimeters.

- coolant pressure and temperature at various points in the facility.

3. EXPERIMENTAL RESULTS - SYMMETRIC TESTS

A large number of single and parallel channel refill tests with symmetric injection and discharge conditions have been conducted. Table 1 shows the summary of test conditions used. As previously mentioned the

progress of water through the feeder-channel system was established from the response of pipework external surface and heater rod thermocouples. Further information was provided by gamma-ray densitometers on the feeder pipes.

3.1 Single-channel Test Results

The results show that the refilling process can be divided into four distinct phases: (1) a blowdown phase, between blowdown initiation and water arrival at the feeder inlets; (2) a feeder refill phase, in which one of the feeders becomes liquid filled; (3) a channel refill phase, in which the channel is refilled; and (4) a long term cooling phase in which the channel heat is removed by liquid circulation. Despite the symmetric injection conditions it was generally observed that refilling is unidirectional. One of the feeders filled with liquid first while the other remained steam filled. The hydrostatic pressure imbalance between the water filled and steam filled feeders apparently led to channel refilling. Although instances of filling through either feeder were observed, there was a definite preference for filling from the outlet feeder to the inlet feeder. This preference may be attributed partly to minor geometrical asymmetries in the system and partly to differences in the wall temperatures of the two feeders at the start of the experiments. Figure 2 shows the refilling sequence in a typical single channel test.

3.2 Parallel-channel Test Results

In these tests the individual channel refilling behaviour resembled that observed in the single channel tests. However, refilling of the two channels invariably occurred in opposite directions, indicating that the channels do not behave independently. In the majority of tests, the top channel refilled from geometrical inlet to outlet and the bottom, from outlet to inlet.

Both single and parallel channel refilling results show that the feeder refilling process is independent of heat transfer effects inside the channel. The feeder refill rate is primarily determined by the amount of heat stored in the feeder pipework. The greater the stored heat, the longer the feeder refill time. The channel refill time is influenced by channel power, rod temperature and channel cooling conditions.

4. DISCUSSION OF OBSERVED BEHAVIOUR

We shall now discuss the reasons for the behaviour described in the preceding section.

4.1 Single-Channel Refill

Consider the diagram of Figure 3. Assume that in the ideal situation, the system is completely symmetric; that is, all resistances in corresponding lines on either side of the diagram are equal, and the portion of the system between the check valve A and the two blowdown valves is initially filled with steam at a uniform temperature. A double-break test is initiated by opening the two blowdown valves. The system then depressurizes and water flows through check valve A and orifices B and C,

fills headers D and E and finally discharges through orifices F and G to the low pressure reservoir at H. Entry of water into the feeders is opposed by the steam which remains in the cicuit DIJE and continues to expand as the system depressurizes. As this is an inherently unstable situation, however, water will eventually start to penetrate one of the feeders. Assume that feeder DI starts to fill at time t_1. Then steam will be generated by heat extracted from the piping. Some of this steam will flow through the channel and feeder EJ to header E. If this steam flow exceeds the critical flooding velocity in the horizontal sections of feeder EJ, it will prevent water from entering that feeder and the entire circuit will fill through feeder DI.

As feeder DI fills, the pressure at point I will increase relative to that at point D owing to the increasing static head. However, because there is only a limited amount of steam available to flow through IJE, the pressure at I cannot rise much above that at E during τ_2, the feeder filling phase of the test. Therefore, the pressure at D will decrease relative to that at E, as shown in Figure 4.

At time t_2, with feeder DI essentially full, water starts to penetrate channel IJ. Water first flows along the bottom of the channel, then rises slowly because of the small driving pressure, $P_I - P_E$, and the large amount of steam generated as the heaters are quenched. After the channel has filled, the outlet feeder EJ fills quickly, and a single-phase thermosiphoning flow is established, owing to the temperature difference between the fluid in the two feeders. During the outlet-feeder filling interval τ_4, the pressures in the system are again redistributed, as shown in Figure 4, reflecting both the static heads in the feeders and the flows around the loop.

4.2 Parallel-Channel Refill

The parallel-channel configuration of the CWIT facility is shown schematically in Figure 5. The sequence of events in parallel-channel experiments is similar to that in single-channel experiments up to the time of first feeder penetration. Here, of course there are four feeders in the system, any one of which may be the first to start filling. Assuming once again that water starts to fill feeder DI first, the pressure at header D will fall below that in header E, for the same reason as discussed earlier for single-channel refill. However, in the parallel-channel case, the pressure difference between D and E will induce a flow in line ELKD in the opposite direction to that in DIJE. Thus, the "outlet" feeder, EL, of the second channel, will fill while the inlet feeder, DI, of the first channel is still being filled. The static head which forms in EL will act in opposition to that in DI, resulting in a smaller pressure difference between headers D and E, and somewhat faster filling of both feeders and channels, than in comparable single-channel tests. This effect has been noted by Shin [7].

Finally, when the system has filled completely, thermosiphoning flows will again be established in both loops, DIJE and ELKD. At this point, the "injection" flow will enter both headers, mix with the circulating flows in the headers and leave the system via the break orifices. It is this mixing action which will provide the necessary heat sink to sustain the thermosiphoning flow in an otherwise closed system.

5. SYSTEMS WITH UNEQUAL HEADER PRESSURES

As mentioned earlier, parallel channel refilling experiments [6] were conducted in the CWIT Facility with the top channel replaced by a 100-mm empty pipe (see Figure 6). This was done to provide an alternative low resistance flow bypass for the injected water, similar in some respects at least to the situation in the reactor after many channels have filled, while a smaller number are still unfilled. In these bypass experiments, the outlet header break orifice size was varied while keeping the inlet header break orifice size constant. A pressure imbalance, depending on the relative orifice sizes, was thus achieved during the tests.

5.1 Results of bypass tests

Table 2 shows the summary of test conditions employed in the bypass tests together with some results. The results showed that, for equal break sizes, the refilling behaviour was similar to that observed in the parallel-channel experiments described earlier. The bottom channel and the bypass line refilled from opposite directions. When the outlet header break orifice size was increased, keeping that in the inlet header line constant, the channel refill time also increased. For larger increases of the break size, the filling direction in the bottom heated channel reversed, becoming the same as that in the bypass line. In the last test for which filling in opposite directions was observed, channel flows became oscillatory.

5.2 Discussion Of Phenomena

It is easily shown that in a single-channel refill experiment, channel cooling will always be improved by an initial pressure imbalance. Let the initial header pressures in the system shown in Figure 3 be denoted by P_{Do} and P_{Eo} respectively, and let $P_{Do} > P_{Eo}$. Water will then fill the feeder DI. As shown previously, the static head of water in feeder DI, equal to ρgh, will cause an adjustment in header pressures, ΔP. However, any such adjustment in pressures cannot be greater than the disturbance causing it. Therefore we have

$$\Delta p < \rho gh$$

At any time t, then we can write

$$P_I(t) - P_E(t) = P_{Do} - \Delta P(t) + \rho gh$$

Thus from the above inequalities, the net driving pressure forcing water through the channel is always greater than in the symmetric case.

For parallel channels, the situation is more complex. For small values of initial pressure difference between headers we may have (see Figure 6).

$$P_D(t) - P_E(t) = P_{Do} - P_{Eo} - \Delta P(t) < 0$$

In this case, after one feeder has started to fill, the second channel will again start filling from the opposite direction. This behaviour was observed in CWIT experiments 1027 to 1029, described earlier. For the second channel, however, the pressure balance is unfavourable, so that

$$P_L(t) - P_D(t) = P_{Eo} - P_{Do} - \Delta P(t) + \rho gh$$

and the driving force for filling this channel is less than it would have been with initially equal header pressures. For a critical range of values of $P_{Do} - P_{Eo}$, the driving pressure $P_L(t) - P_D(t)$ can become zero before lines ELKD have filled completely, and flow through the channel will cease.

This behaviour was, in fact, observed in CWIT-1029, the last test in the bypass test series for which the heated channel and the bypass line filled from opposite sides. In this test, the channel filled, but the venting feeder had only partially filled when the flow was halted. Figure 6 illustrates the situation. A cycle of periodic voiding and refilling of the channel was then established, with a period of 5½ minutes. Four complete cycles were observed before the experiment was terminated (see Figure 5). During this time, the heater temperatures were maintained well below their values during the initial steam-filled phase of the experiment. However, at the peak of their oscillations, upper-element heater temperatures of 300°C were observed. The amplitude of the temperature oscillations appeared to be increasing slightly.

The behaviour observed in CWIT-1029 is similar in many respects to the intermittent boiling-induced flow (IBIF) phenomenon described by Feyginberg et al. [8] and observed in some standing-start CWIT tests [7]. An important difference, however, is that whereas Feyginberg's IBIF model assumes equal header pressures, the oscillatory condition in Test 1029 was produced precisely because the header pressures were unbalanced by just the right a mount to stop the flow in the channel with one feeder full of water and the other only partially filled. Because of the incomplete filling of one of the feeders, the venting mechanism is likely to be somewhat different from that postulated by Feyginberg et al. [8]. One additional factor that would affect the venting process is the variable water level in the incompletely filled feeder during the interval of steam bubble expansion.

Although in CWIT-1029 the heated channel did fill, and subsequent temperature oscillations were fairly moderate, it cannot be ruled out that

for a slightly different pressure balance, the advancing water front might be halted just at the channel entrance, with the back pressure of the steam being generated preventing further progress of the water through the channel (see Figure 8). For this reason, and because the venting and refilling processes occurring in the CWIT-1029 situation have not been completely characterized, further studies of parallel channel filling at critical pressure drops should be done.

6. APPLICATION TO REACTOR LOCA's

It is natural to try to extrapolate behaviour observed in the CWIT facility to a reactor system. Of course, any such extrapolation is bound to be quite speculative, given the present state of our knowledge of refilling dynamics. Nevertheless, we may examine the characteristics of a particular reactor system to form an idea of the extent to which the observed CWIT facility refilling behaviour might apply to the reactor under stagnation-break LOCA conditions.

Figure 9 is a schematic diagram of the relevant portion of the Bruce reactor PHTS. (The Bruce system was chosen for illustrative purposes, but the result of examining other CANDU reactor systems would be similar.) The Bruce PHTS is complicated not only by having many more channels than the CWIT facility, but also by having two inlet headers for each core pass. A further difference that may prove important is that the injection flow does not go directly into the inlet headers, but rather into the preheater bypass lines near one end of the headers. In the case of the outlet header, the injection flow enters the header at one end. However, the geometry of the system connections is such that mixing of the injection flow with the channel flows may not occur along the whole length of the header.

It is important to recognize that the bidirectional flow pattern observed in CWIT parallel-channel experiments depends upon the responsiveness of the header pressures to small pressure disturbances in an associated feeder-channel system. Referring again to Figure 3, it is clear that the response of the CWIT header pressures to the filling of a single feeder depends upon the flow resistance in the 50 mm lines containing orifices B and C. Under LOCA conditions, corresponding reactor inlet and outlet headers will be similarly connected through the ECI system network, as shown in Figure 9. Since both the injection piping and their flow balancing orifices are much larger in the reactor system than in the CWIT facility, owing to the larger number of channels that they supply, it is unlikely that the filling of a single feeder would significantly alter the header pressures. However, the cumulative effect of a large number of reactor feeders being filled from one header may reasonably be expected to have effects similar to those observed in CWIT.

For the reactor situation then, one could postulate two possible scenarios. In the case where the header pressures are so evenly balanced that there is no preferred filling direction, each channel may choose its filling direction on a random basis, independently of all others. If this is the case, one would expect that, after a large number of channels had

filled, roughly equal numbers would have flow in either direction. Alternatively, and more likely, if there is initially a slight imbalance between the header pressures, filling may commence from one side in several channels. When the number of feeders being filled from one end is sufficent to upset the pressure balance in the headers, subsequent channels would start filling from the opposite end. It is possible that several alternations of filling direction could occur during the course of filling the complete core pass.

Whichever of the above scenarios is applicable, it is perhaps fair to conclude that, provided the initial pressure difference between the inlet and outlet headers is less than the static head of water in any feeder, and the headers can be kept full of water, filling of the complete core pass can be accomplished within a reasonable time. This follows from the fact that (a) in symmetric CWIT experiments, one or the other feeder has always been observed to fill, and (b) once a feeder or group of feeders has filled from one end, at least part of the static head thus formed is available to force water through the channel. In the alternating filling-direction scenario, the filling of the feeders to one group of channels tends to promote the filling of another group. Therefore, one can expect this process to continue until all channels have filled.

Consider next the situation where the initial pressure difference between headers is sufficient to initiate the filling process from one direction in a large fraction of the channels. If, at that point, the filling direction for the remaining channels is reversed, a situation comparable to that in CWIT-1029 may be encountered, and there may be insufficient driving pressure available to sustain flow through the later filling channels, or perhaps even to fill them after their feeders have filled. A detailed study of this scenario appears warranted.

Finally, one further point deserves consideration. For this purpose we shall assume that all channels are able to be filled. Consider now the situation existing after complete refilling. We shall further assume that the total flow of water in channels with forward flow is equal to the total flow in channels with reverse flow. This implies that the only interchange of fluid between this circulating system and the rest of the PHTS is through the mixing of ECI water with the water circulating between channels. This mixing can occur only in the headers. Since the circulating flows will be driven solely by gravitational forces, they can be maintained only if there is a sufficent heat sink available at the headers due to the mixing of flows. As noted earlier, the injection water enters the outlet header near one end, so that mixing of injection water with water circulating from channel to channel will certainly occur in the part of the outlet header near the injection point. However, in the scenerio postulated, the injection water will tend to flow out of the header via the exit ports leading to the steam generators. Because of the distribution along the outlet header of these exit ports, it is possible that mixing may not occur along the whole length of the header. Moreover, since the injection point for the inlet headers is completely remote from the headers, as shown in Figure 9, it is doubtful that a significant heat sink would exist at these headers. It would require a very detailed and well supported analysis to show that the limited heat sink that would be available under the conditions postulated would be sufficient to maintain a thermosiphoning flow in all channels.

Although the Bruce reactor system has been used for illustrative purposes in the above discussion, most of the points made would apply with equal force to all CANDU systems. However, any conclusions must be regarded as tentative, pending confirmation by detailed calculations and/or experiments.

7. SUMMARY

In single-channel CWIT experiments in which the initial header pressures are nominally equal, filling always occurs from one side or the other. Once water starts to fill one feeder, the dynamics of the filling process ensure that it will continue in the same direction. The action of filling one feeder upsets the pressure balance, depressing the pressure in the filling header with respect to that in the non-filling header.

In parallel-channel tests with initially equal header pressures, water enters the feeder to one channel before the other, again from one side only. Here, however, the pressure upset caused by the filling of one feeder induces a flow in the second channel in the opposite direction. The two channels continue to fill from opposite ends. After filling is complete, a bidirectional thermosiphoning flow is established. The heat sink necessary to sustain this flow is provided by the mixing of the ECI water with the circulating water in the headers.

Where the initial header pressures are not equal, it can still happen that the filling of the first feeder upsets the header pressures enough to induce the filling of the opposite feeder of the second channel. A situation may then arise where there is insufficient driving pressure to sustain a flow through the second channel. This situation has been observed in CWIT experiment 1029.

It is recognized that extrapolation of CWIT facility results to a many-channel reactor coolant system is highly speculative. However, an examination of the Bruce header-feeder-channel geometry in the light of the above observations has led to the following tentative conclusions:

1. In a stagnation-break LOCA, it can be expected that all channels in the critical core pass will fill within a reasonable time, provided that the header pressures are nearly equal initially and both headers can be kept full of water.

2. There may be a critical difference in initial header pressures such that some channels will either not fill completely, or having filled, will experience periodic voiding and refilling cycles due to the lack of a sufficient driving pressure to maintain flow.

3. The locations of the emergency-coolant injection points in CANDU reactors may play an important role in sustaining channel thermosiphoning flows following a bidirectional filling scenario.

REFERENCES

1. Lewis, E.E., "Nuclear Power Reactor Safety," John Wiley and Sons, 1977.

2. Wadsworth, S., "Bruce NGS-B, Analysis of Fuel and Fuel Channel Behaviour Following Large LOCA's with ECIS Available," Ontario Hydro Nuclear Studies and Safety Report, No. 82441, March 1983.

3. Rajan, V.S.V., and Daymond, D.R.S., "Water Injection Tests in a Horizontal 6-m Long 37-Element Channel with Spray-Cooled Headers and Feeders," Unpublished WNRE Report, No. 481, 1980.

4. Shin, K.S., "Data Report for Channel Spray Tests in the Cold Water Injection Test Facility," Unpublished Westinghouse Canada Report CWAPD-412, 1983.

5. Rajan, V.S.V., and Daymond, D.R.S., "Double Break Transition Cooling Tests in Horizontal 6-m Long 37-Element Channels," Unpublished WNRE Report No. 225-30, 1979.

6. Barclay, F.W., Krishnan, V.S., and Shin, K.S., "Water Injection Tests in a Horizontal 6-m Long 37-Element Channel with a Low Resistance Flow Bypass," WNRE Report in preparation, 1984.

7. Shin, K.S., "Data Report for Standing Start Tests in the Cold Water Injection Test Facility," CWAPD-405, March 1983.

8. Feyginberg, Y., Sergejewich, P., and Fung, K.K., "Assessment of Core-Cooling Without Forced Circulation in Pickering NGS-B at Decay Power Levels," Ontario Hydro Design and Development Division Report No. 82 126, May 1982.

TABLE 1

SUMMARY OF TEST CONDITIONS USED IN SYMMETRIC INJECTION EXPERIMENTS

Parameter	Range Investigated
Number of Channels	Two and One (Bottom Channel)
Feeder Length	Two Configurations - Long and Short
Channel Power	50 - 300 kW
Break Size	6.3 - 100% of Feeder Cross-Sectional Area
Channel Cooling	With and Without Water Spray Cooling of Channel
Header and Feeder Cooling	With and Without Water Spray Cooling of Header and Feeder Pipes

TABLE 2

CHANNEL BY-PASS TESTS - SUMMARY OF TEST CONDITIONS AND RESULTS

	Test Number					
	1019	1020	1021	1022	1023	1025
Injection pressure, MPa	2.0	2.0	1.5	1.5	1.5	1.2
Injection temperature, °C	30	30	30	30	30	30
Break size, % (inlet/outlet)	6.4/6.4	6.4/6.4	6.4/6.4	2.5/2.5	2.5/2.5	2.5/2.5
Power, kW/channel	50	100	100	100	100	100
Pipe preheat, °C	300	300	300	300	300	300
Rod preheat, °C	500	500	500	500	500	400
Blowdown tank pressure, MPa	0.1	0.1	0.1	0.1	0.1	0.1
Total injection flow orifice diameter, mm	25.4	25.4	25.4	25.4	19.9	19.9
Inlet header injection flow orifice diameter, mm	17.1	17.1	17.1	17.1	13.3	13.3
Outlet header injection flow orifice diameter, mm	17.1	17.1	17.1	17.1	13.3	13.3
Heater cooled (?)	yes	yes	yes	yes	yes	yes
Channel filling time (s)	50	80	120	90	120	120
Oscillations (?)	no	no	no	no	no	no
Filling feeder						
By-pass line	inlet	outlet	inlet	inlet	inlet	inlet
Heated channel	outlet	inlet	outlet	outlet	outlet	outlet

All tests conducted in double break, double injection configuration.

TABLE 2 (concluded)

CHANNEL BY-PASS TESTS - SUMMARY OF TEST CONDITIONS AND RESULTS

	Test Number								
	1026	1027	1028	1029	1030	1031	1032	1034	1035
Injection pressure, MPa	1.2	1.2	1.2	1.2	1.2	1.2	1.2	1.2	1.2
Injection temperature, °C	30	30	30	30	30	30	30	30	30
Break size, % (inlet/outlet)	2.5/2.5	2.5/2.5	2.5/6.4	2.5/8.5	2.5/10.6	2.5/12.9	2.5/17.9	2.5/70.0	2.5/100
Power, kW/channel	100	150	150	150	150	150	150	150	150
Pipe preheat, °C	300	300	300	300	300	300	300	300	300
Rod preheat, °C	500	500	500	500	500	500	500	500	500
Blowdown tank pressure, MPa	0.1	0.1	0.1	0.1	0.1	0.1	0.1	0.1	0.1
Total injection flow orifice diameter, mm	19.9	19.9	19.9	19.9	19.9	19.9	19.9	19.9	19.9
Inlet header injection flow orifice diameter, mm	13.3	13.3	13.3	13.3	13.3	13.3	13.3	13.3	13.3
Outlet header injection flow orifice diameter, mm	13.3	13.3	13.3	13.3	13.3	13.3	13.3	13.3	13.3
Heater cooled (?)	yes	yes	yes	yes	yes	yes	yes	no	no
Channel filling time (s)	130	165	180	220	220	240	270	-	-
Oscillations (?)	no	no	no	yes	no	no	no	no	no
Filling feeder									
By-pass line	inlet	outlet	inlet	inlet	inlet	inlet	inlet	inlet	inlet
Heated channel	outlet	inlet	outlet	outlet	inlet	inlet	inlet	inlet	inlet

All tests conducted in double break, double injection configuration.

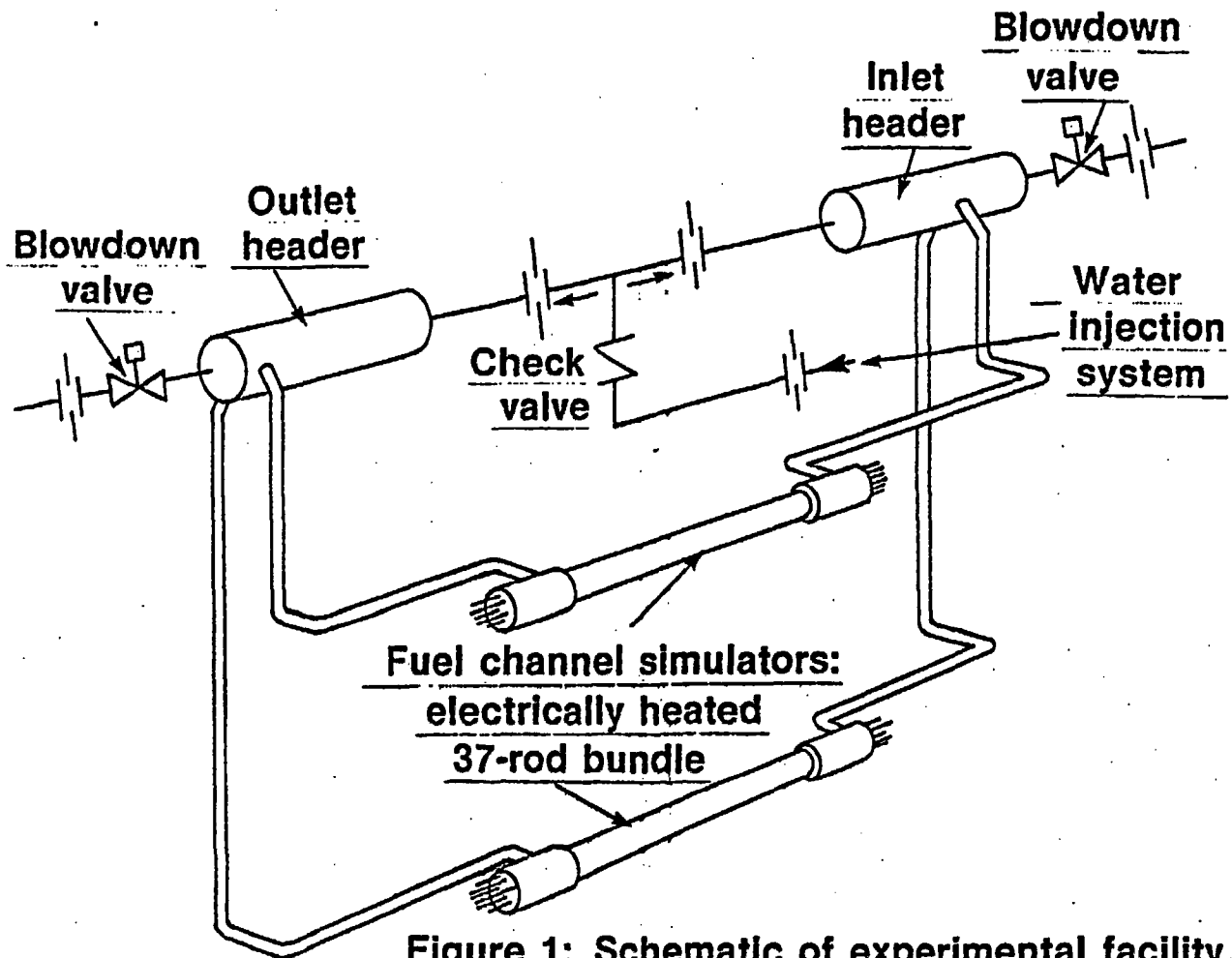

Figure 1: Schematic of experimental facility.

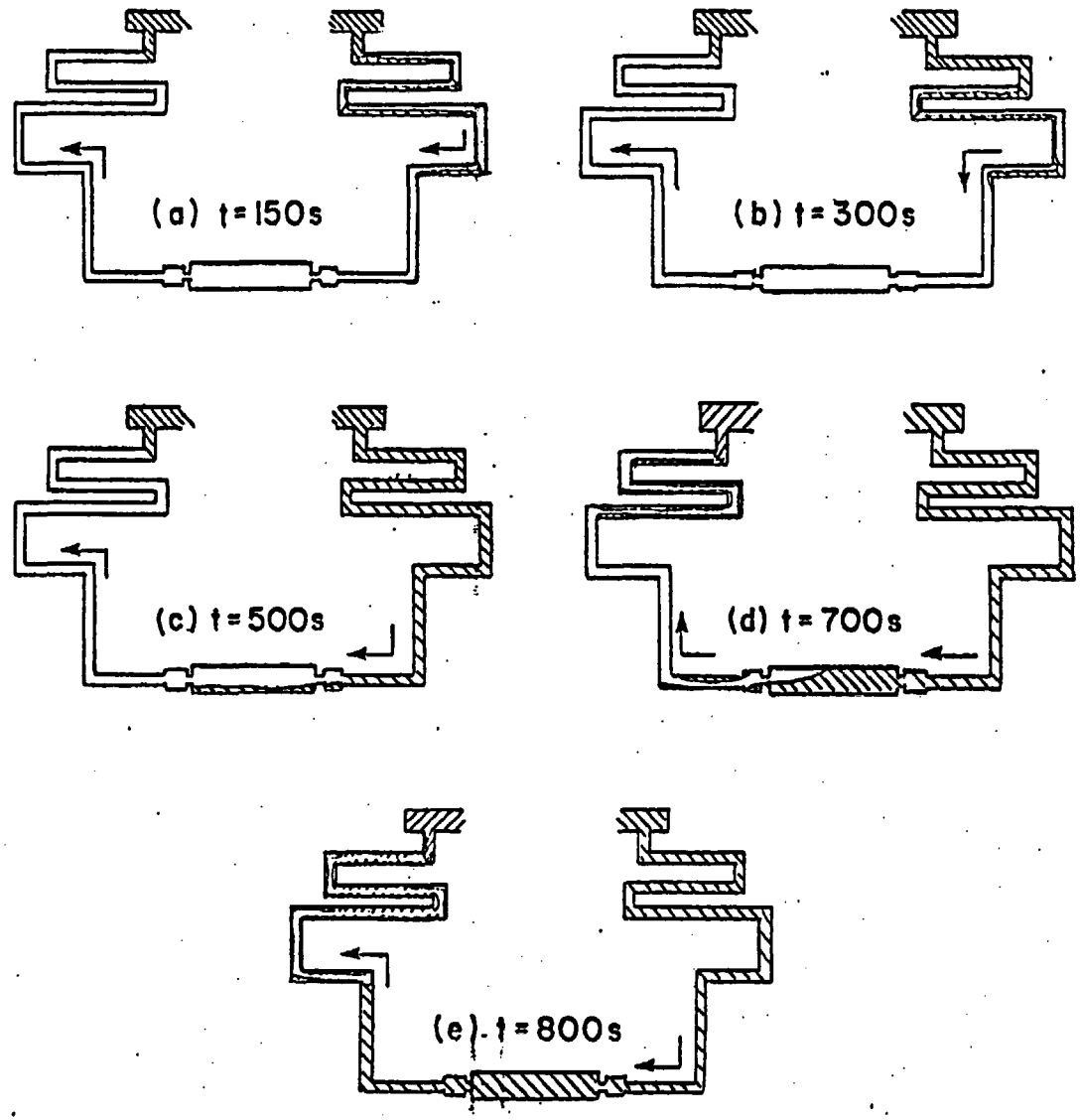

Figure 2 : EVENT SEQUENCE DURING CWIT REFILL TEST WITH EQUAL INJECTION TO BOTH HEADERS; (a),(b),(c): FEEDER REFILL; (d),(e): CHANNEL REFILL.

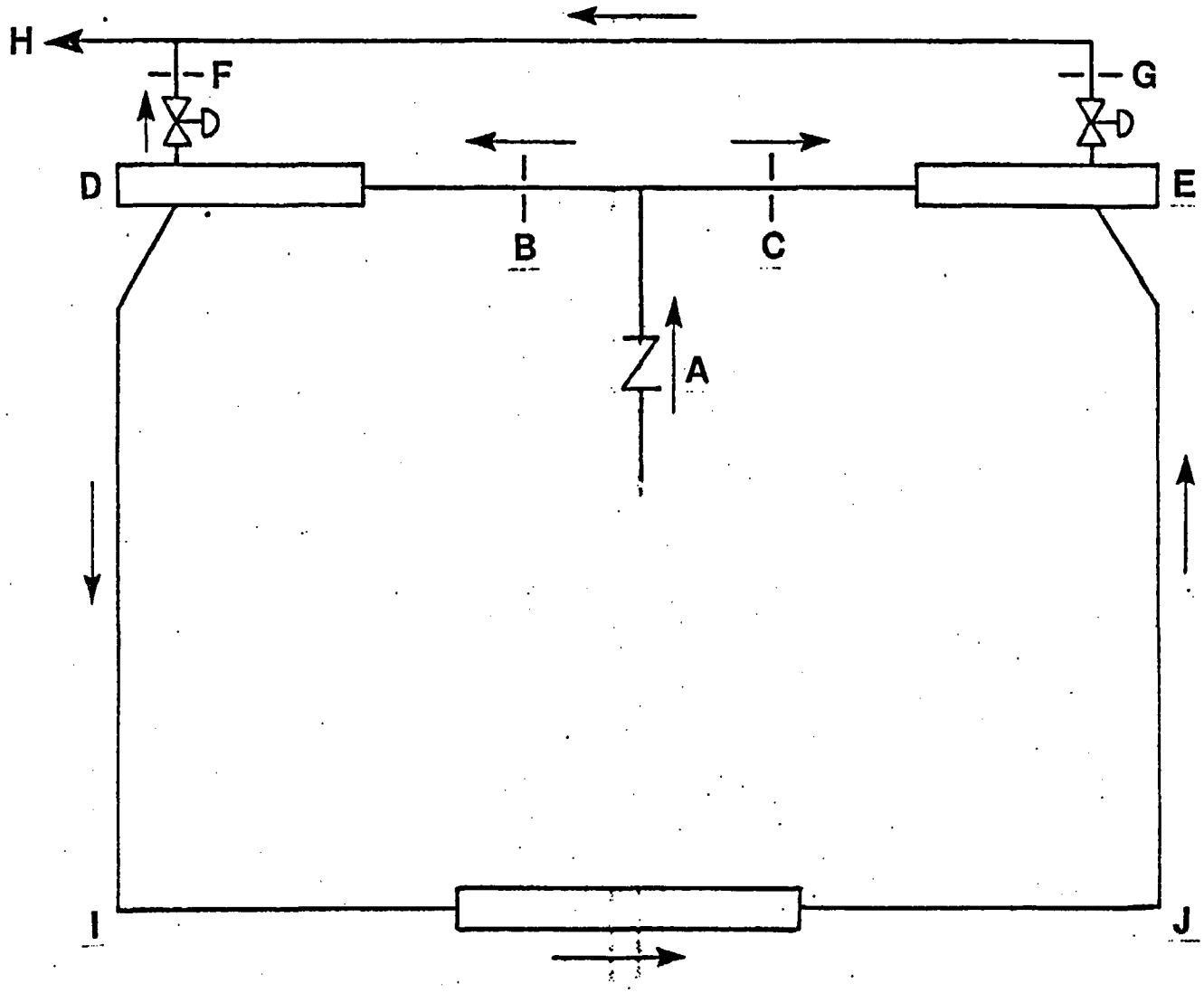

Figure 3: Schematic diagram of CWIT facility in the single channel, double break, double injection configuration.

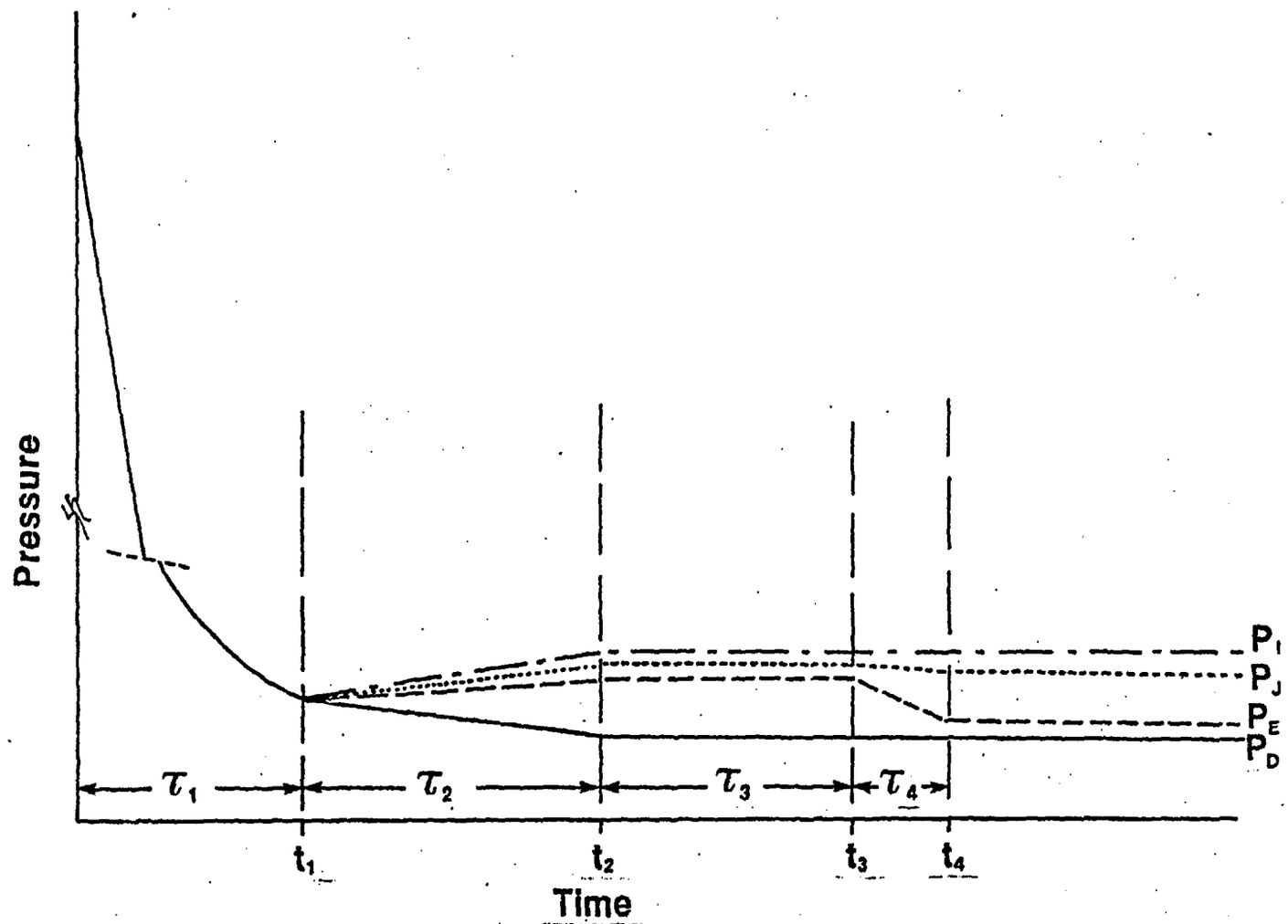

Figure 4: Distribution of pressures during refill of a single CWIT channel.

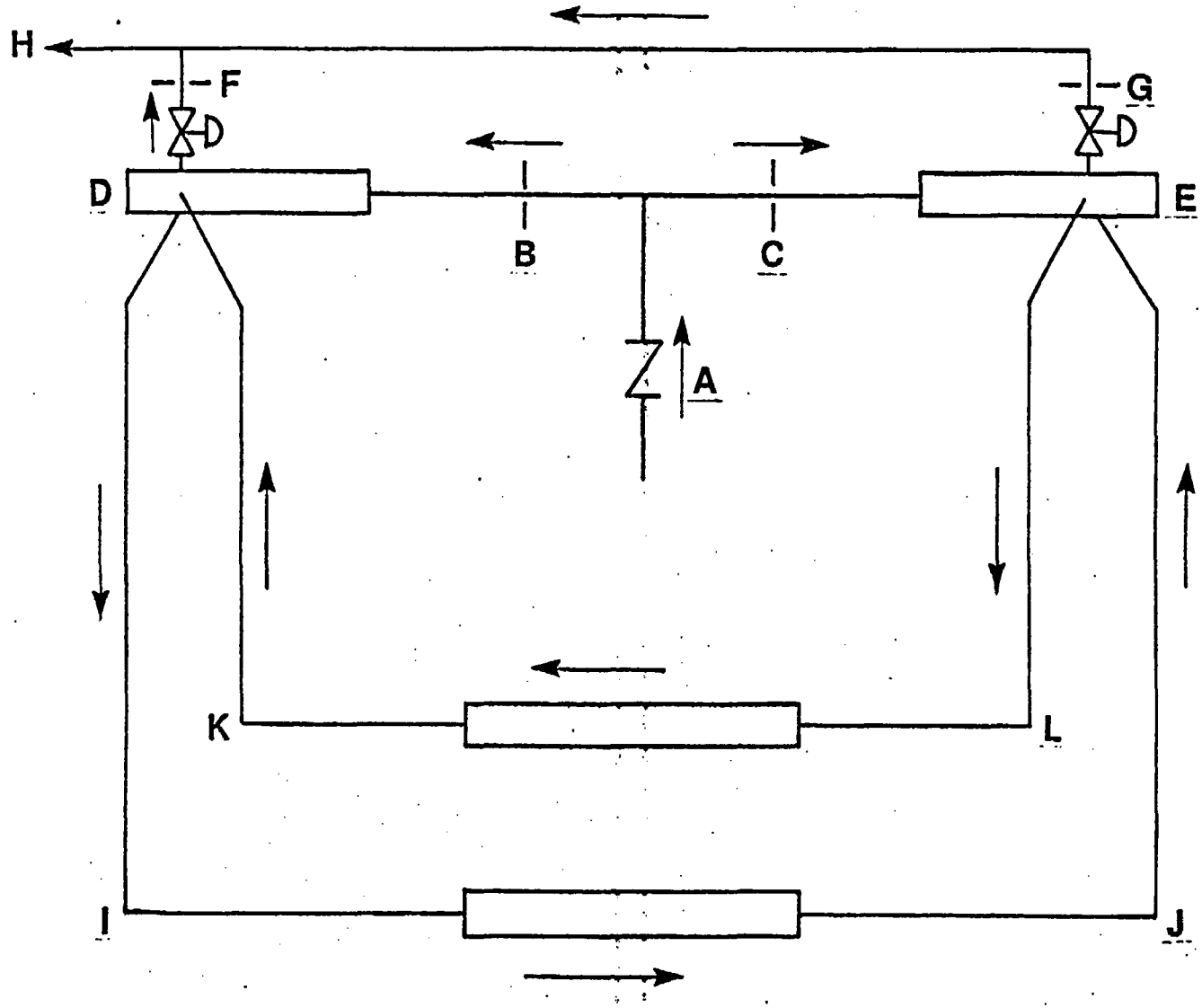

Figure 5: Schematic diagram of CWIT facility in the parallel channel, double break, double injection configuration.

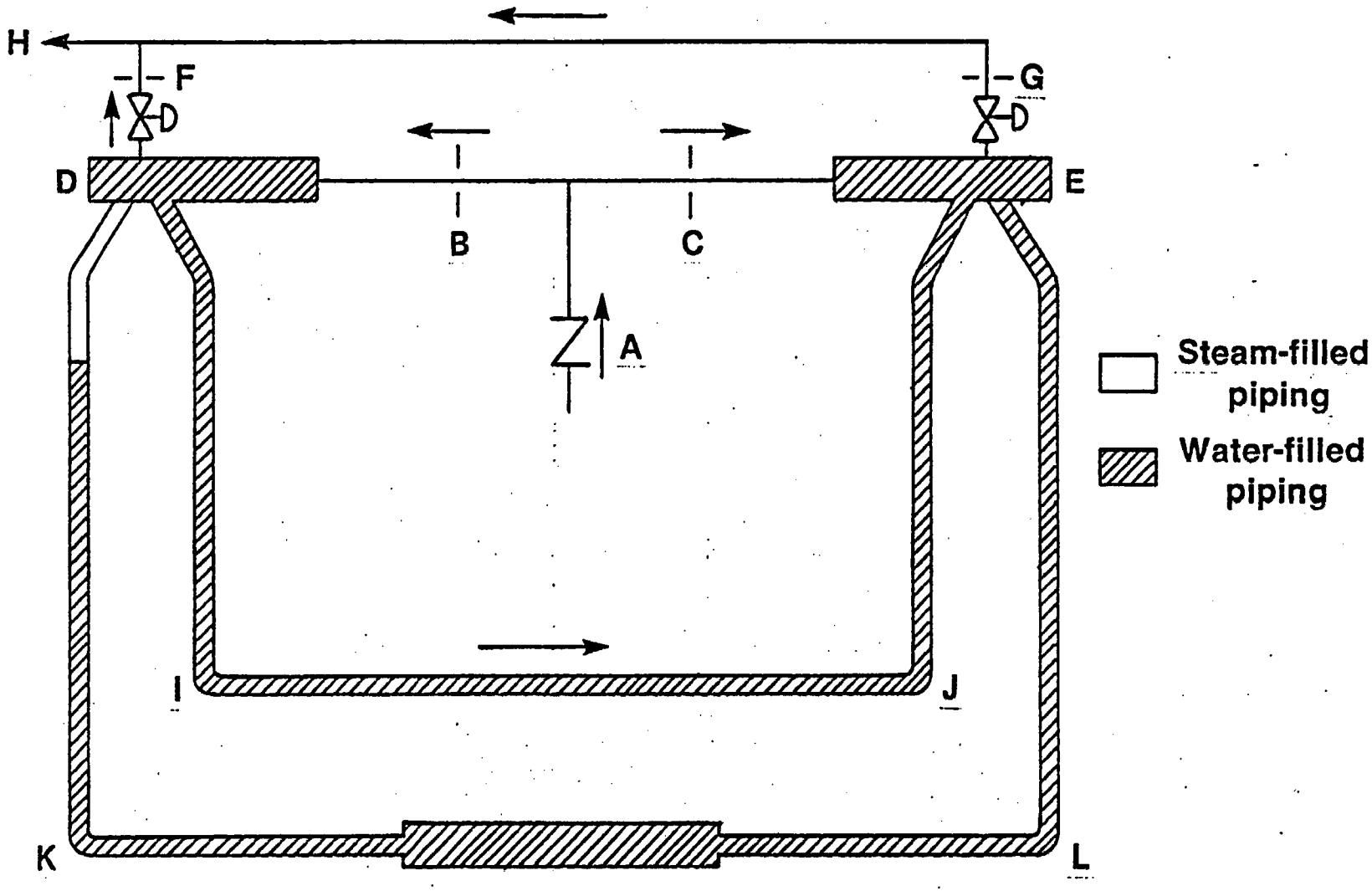

Figure 6: Schematic diagram of CWIT facility in the channel bypass configuration showing the final distribution of water in test 1029.

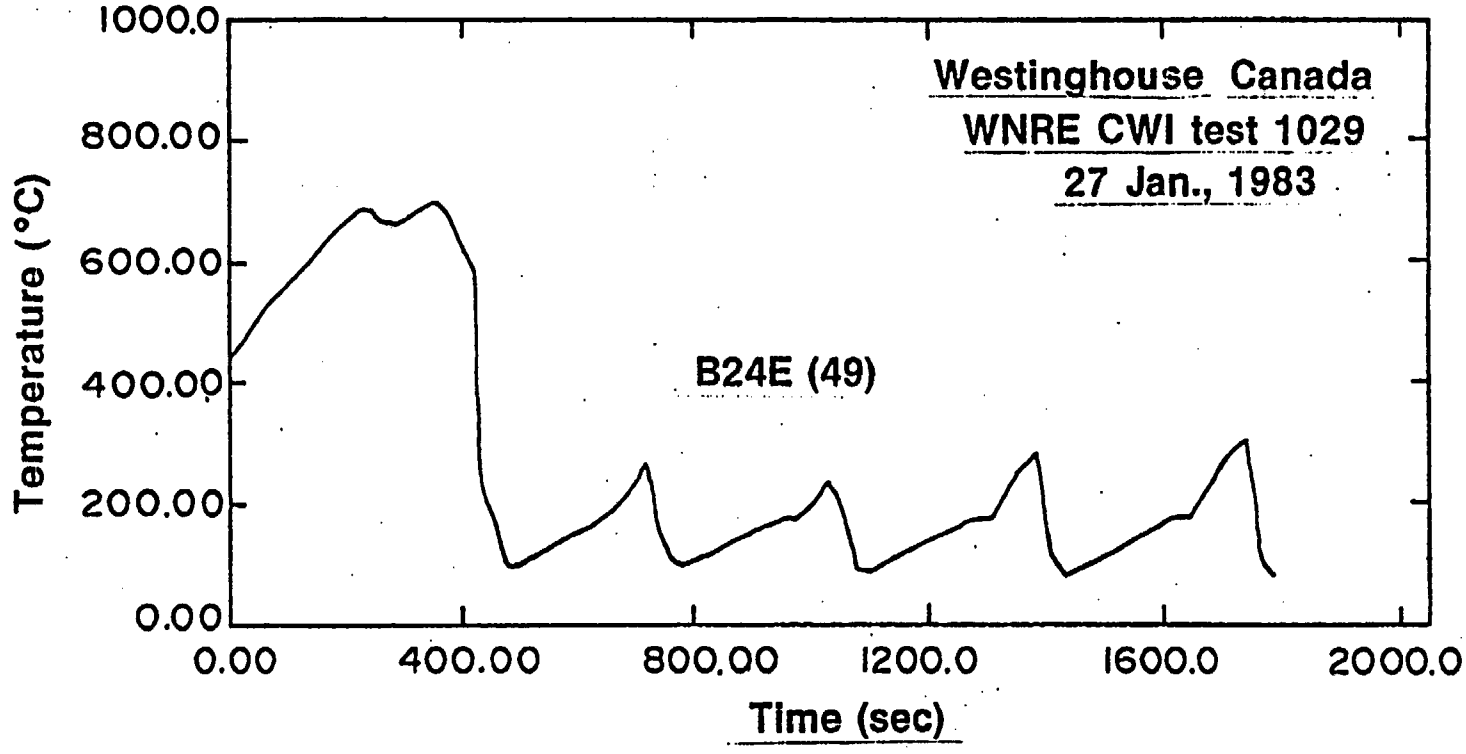

Figure 7: Upper heater pin temperature history during CWIT-1029.

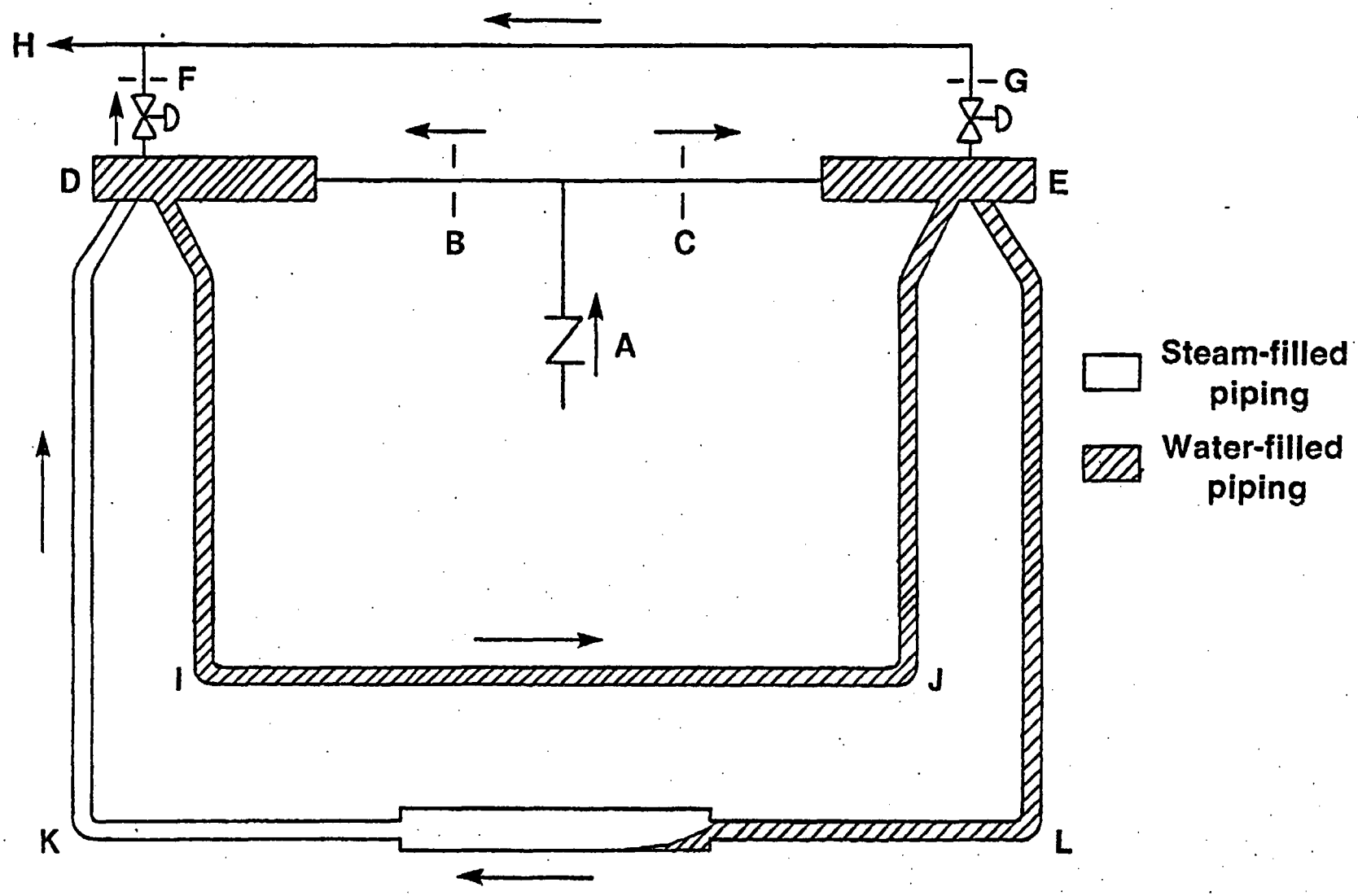

Figure 8: Schematic diagram of CWIT facility in the channel bypass configuration showing the distribution of water in a postulated limiting case.

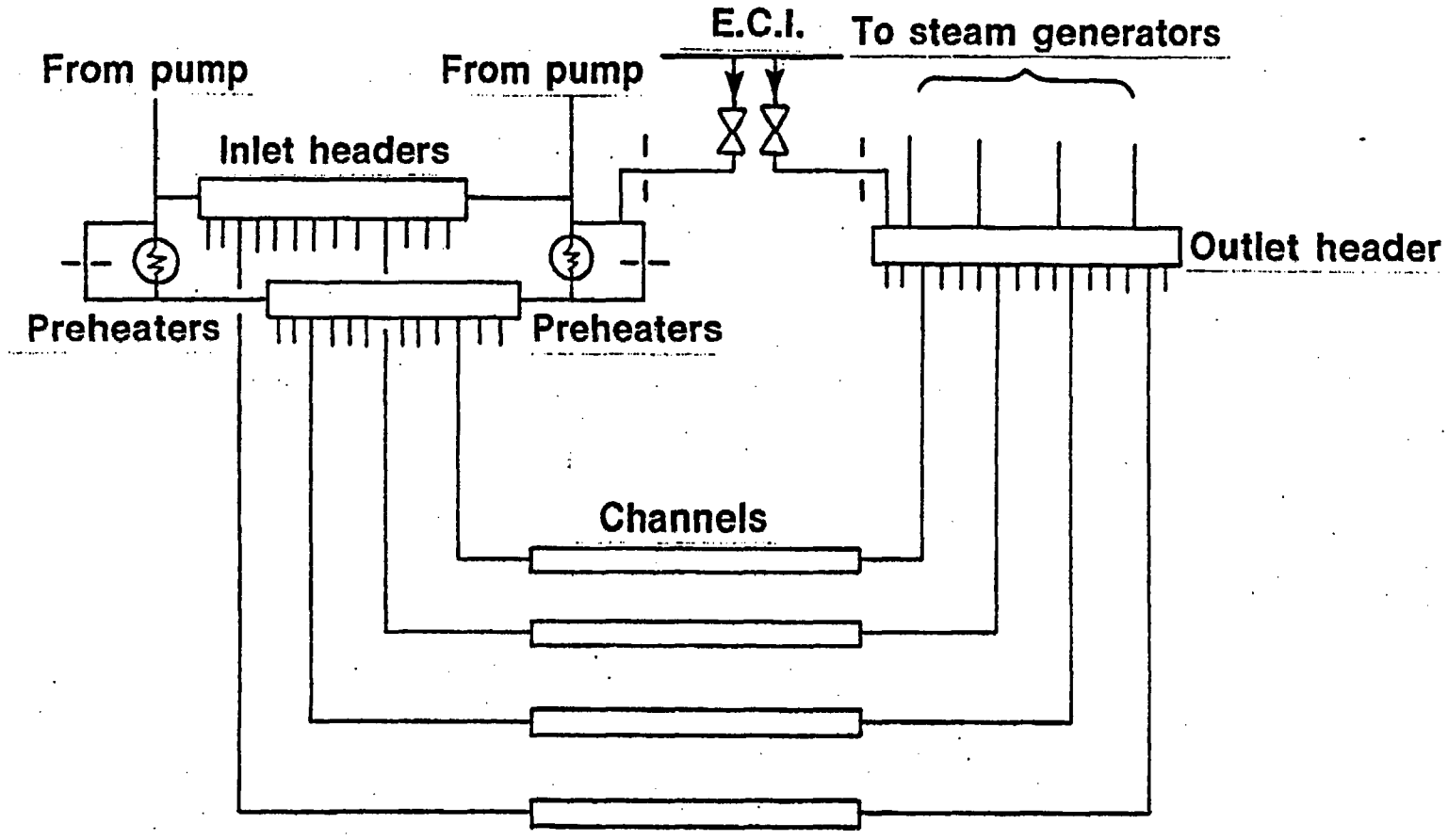

Figure 9: Schematic diagram of Bruce header, feeder and channel arrangement.

AN ANALYSIS OF REFILL TESTS CONDUCTED IN THE MODIFIED COLD-WATER INJECTION TEST FACILITY

J.R. Buell and J.E. Kowalski

Thermalhydraulics Branch
AECL Research
Whiteshell Laboratories
Pinawa, Manitoba, Canada R0E 1L0

1. ABSTRACT

Refill experiments were conducted in the Cold-Water Injection Test (CWIT) facility. The facility was recently modified to include a fuel-element simulator (FES) with an axial cosine-power distribution and CANDU 6 like end fittings. The objective was to investigate the quench and refill behaviour of the modified facility.

A detailed characterization of the quench and refill behaviour of the feeders, end fittings, and channel was obtained. Channel power had no effect on the feeder quench, but had the effect of delaying the start of feeder refill, resulting in longer refill times. Data were compared with previous experiments performed with an axial uniform-power distribution and end-fitting simulators. No significant effect of the end-fitting geometry on quench and refill times was found. A comparison between a test with an axial cosine-power distribution, and a test with a uniform power distribution showed little differences in overall channel refill times.

2. INTRODUCTION

During some postulated loss-of-coolant accidents (LOCAs) in a CANDU reactor, rapid channel voiding is predicted, followed by near-zero header-to-header pressure drop in the breached circuit. Under these conditions, the effectiveness of the emergency coolant injection (ECI) system in delivering cold water to the reactor core is extremely important. The refill process involves not only the fuel channels, but also the refill of the end fittings and feeders connecting the channels to the headers.

To date, many tests have been conducted in the Cold-Water Injection Test (CWIT) facility using a fuel channel with an axial uniform-power distribution, and end-fitting simulators. These tests were analysed by Ardron et al. [1] and Wan [2], and have provided valuable information on the feeder and fuel channel quench and refill behaviour during simulated LOCA conditions with cold-water injection. During most tests, long feeder refill time delays were detected [1], and were attributed to the countercurrent flow of steam in the feeders. Wan [2] concluded countercurrent flow was a dominant mechanism restricting the propagation of the quench front through the feeders.

The CWIT facility was recently modified to include a fuel-element simulator (FES) with an axial cosine-power distribution and CANDU 6 (Gentilly-II) like end fittings. These modifications made the geometry of the facility closer to that of a CANDU reactor. More thermocouples were installed in various locations of the end fitting, pressure tube, and FES to detect the propagation of the quench and refill fronts in more detail.

A series of refill experiments was conducted over a range of loop preheat temperatures, system pressures, cold-water injection flow rates, and break sizes. All tests were performed with a simultaneous inlet and outlet header break, resulting in near-zero inlet-to-outlet header pressure drop. The present experiments are compared with experiments performed prior to the modification of the facility. The effects of channel power, end-fitting geometry, and the channel axial-power distribution on the quench and refill behaviour are discussed.

3. TEST FACILITY

3.1 Facility Description

The test facility, shown in Figure 1, consists of a channel assembly, two headers, inlet and outlet feeders, two break-simulation devices, a blowdown tank, and a cold-water injection system. The full-scale channel assembly contains a 6-m long, electrically heated 37-element fuel string. The fuel string has an axial cosine-power distribution with an average design heat flux of 1.9 W/cm^2. The heat flux at the centre of the FES is 1.485 times the average heat flux, and the heat flux at the ends of the element is 0.15 times the average heat flux. By applying different voltages to the individual FES rings, a radial power depression ratio of 1.0/0.81/0.72/0.68, from the outer element to the centre element, is maintained during the tests. This represents a typical CANDU radial power depression ratio during operating conditions. The channel assembly is housed in a 10-cm-diameter Zircaloy pressure tube to which full-scale CANDU 6 end fittings are attached.

The end fittings used on the CWIT facility differ from real CANDU 6 end fittings. The shield plug/latch assembly is replaced by the unheated parts of the FES and the supporting baffle plates. This difference means the volume of water in the dead space is two- times smaller, and the combined mass of the unheated fuel string/baffle plates is 2.5 times greater than for a CANDU 6 shield-plug assembly.

Sections of vertical and horizontal feeder piping connect the end-fittings to the headers. The upper feeder sections consist of 75-mm diameter pipe, while the lower sections consist of 50-mm diameter pipe. The connected piping represents typical CANDU feeders.

As shown in Figure 1, 50-mm diameter break lines are attached to the top of each header. Both the inlet and outlet header break lines expand to 200-mm diameter, and connect to a blowdown tank. For all tests the nominal blowdown-tank pressure was 200 kPa. Blowdowns are initiated by opening pneumatic quick-acting valves installed on both break lines. To control the size of the breaks, flanges on the inlet and outlet header break lines allow the installation of different size orifices. A cold-water injection system, controlled to give a near constant injection flow rate, is connected to both headers. Cold-water is injected into each header through an axial nozzle.

The test facility is extensively instrumented with nearly 250 data channels being recorded. Thermocouples are used to measure fluid, the pipe-wall and heater surface temperatures. Differential and gauge pressure transmitters measure the local pressures at various locations on the loop. A gamma densitometer is installed on the vertical section of each feeder line near the fuel channel elevation. Locations of instrumentation are shown in Figure 1.

3.2 Test Procedures

To achieve near zero header-to-header pressure drop, the facility is set up using a symmetric inlet/outlet header break, with cold-water injection into both headers (double-

break, double-injection configuration). The initial conditions are established by circulating superheated steam, at approximately 300°C, through the loop until the piping is a few degrees above the desired preheat temperature. Channel power is periodically applied during preheating to ensure similar inlet and outlet feeder surface temperatures. The steam flow is then shut off, and the desired system pressures are established. For some tests, power is then applied to the FES. Data logging is started and blowdown (depressurization) of the loop is initiated by opening the quick-acting valves in the discharge lines of both headers. Cold-water injection begins when the header pressures drop below 1.5 MPa. A test was ended when either the channel refilled, or when the channel power was tripped due to high FES temperature (780°C).

A total of nine refill experiments were performed (tests 1465 to 1473). The independent variables for these experiments were initial feeder temperature, initial pressure, channel power, and break size. Three representative tests were chosen for analysis purposes.

4. ANALYSIS OF QUENCH AND REFILL TIMES

Test 1465 is analysed to obtain detailed information about the quench and refill behaviour. Conditions for this test were as follows: 50-mm break size for both inlet and outlet, initial pressure of 5.3 MPa, initial preheat temperature near 295°C, nominal cold-water injection flow rate of 6 kg/s (3 kg/s into each header), and a channel power of 50 kW (maximum achievable power without tripping the power). Although the conditions for other tests were different, the method of analysis and general behaviour are similar. Measured surface and fluid temperatures, differential pressure across the channel, and void fraction measurements were used to investigate the propagation of quench and refill fronts in the headers, feeders, end-fittings, and channel.

Thermocouple measurements are used to detect the propagation of the quench and refill fronts. Before a detailed analysis of the surface temperature behaviours is presented, it is necessary to define the criteria used in determining the quench and refill times. The present analysis uses the same criteria reported in [2]. Quench occurs when the surface rewets, resulting in a rapid increase in the heat transfer coefficient. Quench is indicated by the rapid decrease in surface temperature towards the saturation temperature. The surface is presumed to have refilled when the surface temperature dropped below, and remained below, the saturation temperature. Figure 2 shows the typical response of thermocouples installed on the top and bottom surfaces of a horizontal section of the inlet feeder.

4.1 Propagation of Quench Front

Quench and refill times for various locations are shown in Figure 3. All quench and refill times in the present analysis are referenced to the start of the blowdown. The horizontal ordinate is the length, converted to linear distance, from the centre of the channel. For the horizontal feeder, end fitting, and channel sections, only the quench and refill times at the bottom locations are shown. Both headers quenched shortly after the injection of cold water. After quenching of both headers, water began to penetrate the upper sections of the inlet and outlet feeders. The steam generated during water contact with the hot feeder wall had two directions to flow; countercurrent to the downward flow of water or cocurrent with the water flow. In horizontal feeder sections the bottom of a feeder pipe quenched before the top, as shown in Figure 2. Quenching of the top horizontal feeder sections occurred later because of flow stratification. Thermocouple TS45, located on the bottom vertical section of the inlet feeder, indicated a much longer quench time compared with the surrounding thermocouples. It is believed that the liquid entering the vertical feeder sections did not contact the pipe wall long enough to quench the pipe. Thermocouple TS3 indicated

quenching before TS45 because of the lower initial surface temperature in the vicinity of the gamma densitometer.

The quench front initially advanced more rapidly in the outlet feeder. The front reached the location of TS29 within approximately 20 seconds of the blowdown. The upper sections of the outlet feeder quenched first because of the lower initial surface temperatures at the top sections of the outlet feeder. These lower temperatures were due to the presence of condensate in the upper sections of the outlet feeder during preheating. Quenching of the outlet feeder ceased as the quench front reached the location of TS29. It is believed the quench front stopped advancing because of the higher surface temperatures in this section of the outlet feeder. The quench front then started advancing in the inlet feeder. Because of the flow of superheated steam towards the outlet header, the upper section of the outlet feeder that had quenched during the initial stages of the experiment heated up. Much later in the experiment, the upper section then quenched again as the quench front advanced through the entire outlet feeder. Quench times were taken as the time of the last quench.

Figure 4 shows the differential pressure (DP) measured across the channel. During the quenching of the inlet feeder, the channel DP was mostly positive, indicating the flow of steam, or high quality mixture, from the inlet feeder to the outlet header. This flow of steam resulted in countercurrent flow in the outlet feeder, and probably halted the advancement of the quench front in the outlet feeder. Most of the outlet feeder did not quench until after the majority of the inlet feeder had refilled.

Quenching of the bottom of the inlet end fitting occurred before the entire inlet feeder was quenched. This occurred because injected liquid reached the end fitting without wetting the bottom vertical surface of the inlet feeder, or the top of horizontal feeder sections. Quenching at the top of the end fitting took significantly longer than the bottom section, and did not occur until larger volumes of injected liquid reached the end fitting. This happened when the inlet feeder began to refill.

A long delay occurred between quenching of most of the end-fitting and quenching of the channel began. This delay was probably due to the high temperatures of the heated fuel elements before quenching. Both the bottom of the pressure tube and the bottom of the FES rapidly quenched at the same time. Again, this corresponded to the refilling of the inlet feeder. As the channel started to quench, the channel DP (Figure 4) increased due to the higher steam flow towards the outlet header. As shown in Figure 5, quenching of the pressure tube occurred systematically, progressing from the bottom towards the top of the pressure tube. The longest quench times occurred near the top centre of the pressure tube, the location of the highest surface temperatures (maximum heat flux is generated by the FES at the axial centre). Also, channel flow stratification may have delayed the quenching of the top sections.

Quench times extracted from the FES temperatures showed more complicated behaviour than the pressure tube, possibly due to the non-uniform-power generation. As shown in Figure 6, the longest quench times also occurred at the top centre of the FES. The quench behaviour of other FES elements were quite complicated and did not show consistent trends. For example, element five, located on the outer ring, showed significantly longer quench times at the centre compared with locations upstream and downstream, presumably due to the higher surface temperatures because of the higher heat flux at the centre of the FES. However, element 37 quenched sooner at the centre compared with locations upstream or downstream.

4.2 Propagation of Refill Front

As seen in Figure 3, the inlet feeder and end fitting refilled systematically, progressing from the inlet header to the channel. As the inlet feeder refilled, a hydrostatic head developed, resulting in a larger driving force for the flow towards the outlet header. The refilling of the upper sections of the inlet feeder resulted in an increased flow of liquid into the channel. It is believed the propagation of the quench front through the bottom of the channel, the outlet end fitting, and the outlet feeder was the result of the increased liquid flow due to the hydrostatic head as the inlet feeder refilled. Refilling of the outlet feeder did not occur until after the feeder was completely quenched. The bottom sections of the outlet feeder refilled almost simultaneously at approximately 510 seconds after the blowdown.

Figures 7 and 8 display the refill times extracted from various thermocouple locations on the pressure tube and FES, respectively. Refill of the pressure tube generally progressed from the inlet to the outlet and from the bottom to the top. Refill of the FES was more complicated than the pressure tube. Compared with the feeders, the top of the channel took significantly longer to refill. Thermocouple 33I, located downstream of the centre of the FES, indicated the longest refill time. The long refill time for the top of the channel may partly be the result of low liquid flow through the channel, after the refill of both of the feeders. As shown in Figure 4, following the refill of both the inlet and outlet feeders, the channel DP was near zero, indicating a low flow rate between the headers. After both feeders refilled, the driving force for the flow in the channel was significantly reduced.

5. EFFECT OF CHANNEL POWER

A comparison between tests 1465 and 1466 is presented to study the effects of channel power on the inlet feeder quench and refill times. Test 1466 was performed with similar initial and boundary conditions to test 1465. Test 1465 was performed with a channel power of 50 kW, while power was not applied to the channel during test 1466.

Figure 9 shows the quench times for tests 1465 and 1466. Except the top of the horizontal inlet-feeder sections and the vertical feeder sections (TS45 and TS39), the propagation of the quench fronts in the inlet feeder and end fitting was similar. The times required for the quench front to reach the bottom of the inlet feeder and the end fitting were similar for both tests, within 10 seconds. The top of the horizontal sections and the vertical sections (TS45 and TS39) quenched much later during test 1465 with channel power. It is believed that with channel power more steam would be generated as liquid reached the channel. The countercurrent flow of steam would prevent certain sections of the inlet feeder from quenching. These sections did not quench until after the inlet feeder began to refill.

Refill times for both tests are presented in Figure 10. Refilling of the inlet feeder and end fitting occurred more than 80 seconds later during test 1465. The longer refill times for the inlet feeder and end fitting indicate channel power had the effect of delaying feeder refill. A comparison between Figures 9 and 10 shows during test 1466 the inlet feeder began to refill approximately 15 seconds before the completion on the feeder quench phase. However, during test 1465 a delay of approximately 55 seconds occurred before the feeder began to refill. For both tests, the time required for the refill front to propagate through the inlet feeder was similar. It is believed the refill front is driven by the generated hydrostatic head, which is not affected by channel power. Thus, the effect of channel power was to delay the start of feeder refill, but not to effect the time required for the refill front to propagate through the inlet feeder. The delay in the start of feeder refill is believed to be due to the higher countercurrent flow rate of steam during test 1465. The countercurrent flow of steam would restrict the flow of injected liquid into the feeder.

6. EFFECT OF END-FITTING GEOMETRY

Prior to test 1465, end-fitting simulators were attached to the ends of the fuel channel. The simulators were stand-alone devices mounted in parallel with the fuel channel and connected to the channel via a short section of piping. A comparison between the CANDU end fitting and the end-fitting simulator is provided in Figure 11. The end-fitting simulator was shorter in length than the present CANDU end fitting, but the cross-sectional flow area was reduced to give a similar flow resistance to the CANDU end fitting. Prior to test 1465, end-fitting simulators were attached to the ends of the fuel channel. The simulators were mounted in parallel with the fuel channel and connected to the channel via a short section of piping. The end-fitting simulator was shorter in length than the present CANDU end fitting, but the cross-sectional flow area was reduced to give a similar flow resistance to the CANDU end fitting.

Significant geometrical differences and thermocouple locations on the end fittings made a direct comparison of the quench and refill times within the end fittings impossible. Therefore, the end fittings and the channel were treated as a 'black box' through which the quench and refill fronts must pass. Only tests without channel power are considered. Since no power was applied to the channel, it was assumed only the end fittings may affect the quench and refill times. The closest measurement locations to the 'black box' were TS3 and TS4 located on the lower vertical sections of the inlet and outlet feeders, respectively.

Table 1 shows the time for the quench front to pass through the end fittings and channel for tests 1467 and 1402. Test 1467 was performed with CANDU end fittings, and test 1402 was performed using the end-fitting simulators. It appears that there was a small increase in the time required for the quench front to propagate through the inlet end fitting, the channel, and the outlet end fitting for test 1402 with the end-fitting simulator. This was in part due to differences between the CANDU end fitting and the end-fitting simulator; however, it should be noted these time differences included the effects of the end fitting, the channel, and the initial conditions. It is unclear which effects are most significant. Also shown in Table 1 is the time required for the refill front to propagate through the inlet end fitting, the channel, and the outlet end fitting. Refill times appeared to be little affected by the geometrical differences between the end fittings. The effect of the end-fitting geometry was believed to be small because the refill front was driven by the hydrostatic head in the inlet feeder, and therefore depended on the feeder height. Differences in the flow resistance of the CANDU end fitting and the end-fitting simulator were small.

7. EFFECT OF POWER DISTRIBUTION

Quench and refill times for tests 1465 and 1406 are compared to show the effect of the channel axial-power distribution. Both tests were performed with inlet/outlet header break size of 50 mm, nominal cold-water injection flow rate of 6 kg/s (3 kg/s per header), and channel power of 50 kW. Other conditions were as follows:

	1465	1406
initial pressure	5.3 MPa	4.0 MPa
initial inlet feeder preheat temperature	295°C	280°C

The radial power depression ratio was the same for both tests; however, the channel power during test 1406 was uniformly distributed over the length of the FES, and during test 1465 the channel power was distributed as a smooth cosine. Also, end-fitting simulators were used during test 1406, while CANDU end fittings were used during test 1465. As discussed in section 5, the end-fitting geometry difference had little effect on the quench and refill times.

As outlined in section 4, channel power did not affect the time required for the quench front to reach the channel. As a result, it is expected the channel power distribution should not affect the propagation of the quench front in the inlet feeder and end fitting. For tests 1406 and 1465, the quench times were virtually the same for locations TS43 and TS3, indicating the quench front reached the bottom section of the inlet feeder at the same time.

The quench times for various thermocouple locations in the FES are given in Figure 12. It must be noted that the FES temperatures, prior to quench, were more than 50°C higher during test 1406 because of differences in test procedure. For both tests the bottom of the FES rapidly quenched at approximately the same time. At the centre element, the quench times were similar, within 30 seconds. Quench times were slightly longer at the top ends of the FES during test 1406, possibly due to the higher initial temperatures. Initial temperatures at the ends of the FES were higher during test 1406 because of the higher heat flux (linear distribution) than during test 1465 (cosine distribution). Based on the comparisons given above, the axial power distribution did not affect the time required for the quench front to reach the channel. Quench times for the FES were similar; however, it is uncertain what effect the differences in the initial FES temperatures had on the quench times.

During test 1465, the refilling of the inlet feeder was delayed by approximately 30 seconds compared with test 1406; however, the time required for the refill front to advance through the feeder was similar for both tests. This indicated the velocity of the refill front in the inlet feeder was similar for both tests. The reason for the refill delay during test 1465 is unknown, and cannot necessarily be contributed to the channel power distribution.

Figure 13 gives the refill times extracted from various thermocouple locations in the FES. The bottom of the FES refilled quicker during test 1406. All of the thermocouples on the bottom, downstream end of the FES did not refill during test 1465. The thermocouples on the centre of the FES (element 37) were located at different axial locations for each test; however, for the thermocouples shown, the centre element appeared to refill at approximately the same time for both tests. Refilling of the top of the FES took longer during test 1465 (cosine distribution); however, much of this can be attributed to the more than 30 second delay in the refilling of the inlet feeder. During test 1465, long refill times for the top centre of the FES occurred because the refilling of the top of the channel was delayed until after both feeders have refilled. As discussed in section 3.2, the liquid flow through the channel dropped to near zero after both feeders refilled.

8. CONCLUSIONS

- Compared with previous tests [2], more extensive instrumentation in the end fittings and channel provided a more detailed picture of the quench and refill behaviour.

- Following the blowdown, the quench front entered the upper sections of both feeders; however, the quench front preferentially propagated through one feeder into the end fitting and channel. The longest time delay occurred during feeder quench.

- Refill of the feeder, end fitting, and channel occurred after the feeder was quenched. Refill of the channel generally progressed in the direction of the refill front propagation, and from the bottom of the channel to the top. The time required to completely refill the channel was significant, and was comparable to the duration of feeder refill.

- Channel power did not affect the time required for the quench front to propagate through the inlet feeder and end fitting; however, it had the effect of delaying the start

of feeder refill. Once the feeder began to refill, channel power did not affect the time required for the refill front to reach the channel.

- The present tests, performed with CANDU end fittings, were compared with previous tests performed with end-fitting simulators. The effect of the end-fitting geometry on the quench and refill times was small, despite the differences in cross-sectional flow area, heated-surface area, and heated mass.

- The channel power distribution did not appear to affect the overall quench time for the inlet feeder. Overall feeder, end fitting, and channel refill times were slightly longer during test 1465 with a cosine-power distribution; however, this could not be attributed to the difference in channel power distribution.

ACKNOWLEDGEMENT

This work was funded by the CANDU Owners Group (COG) under contract number WPIR 0413. The experiments analysed in this paper were performed at Stern Laboratories Inc.

REFERENCES

1. K.H. Ardron, V.S. Krishnan, J.P. Mallory, and D.A. Scarth, "Studies of Hot-Wall Delay Effects Pertinent to CANDU LOCA Analysis," Proc. of 5th Intern. Meeting on Thermal Nuclear Reactor Safety, Karlsruhe, September 1984.

2. P.T. Wan, "Analysis of Refill Behaviour in CANDU-Type Feeders," Proc. Fourth Intern. Meeting on Nuclear Reactor Thermal-Hydraulics, Karlsruhe, Oct. 1989, Vol. 2, p. 1183-1188.

TABLE 1
QUENCH AND REFILL TIMES ACROSS CANDU AND SIMULATED END FITTINGS

Test No.	Initial Pressure (MPa)	Initial Temperature (°C)	Time Difference Between TS3 and TS4 (seconds)		End Fitting Type
			Quench	Refill	
1467	4.9	265	62	83	CANDU 6
1402	4.1	265	85	90	End-fitting simulator

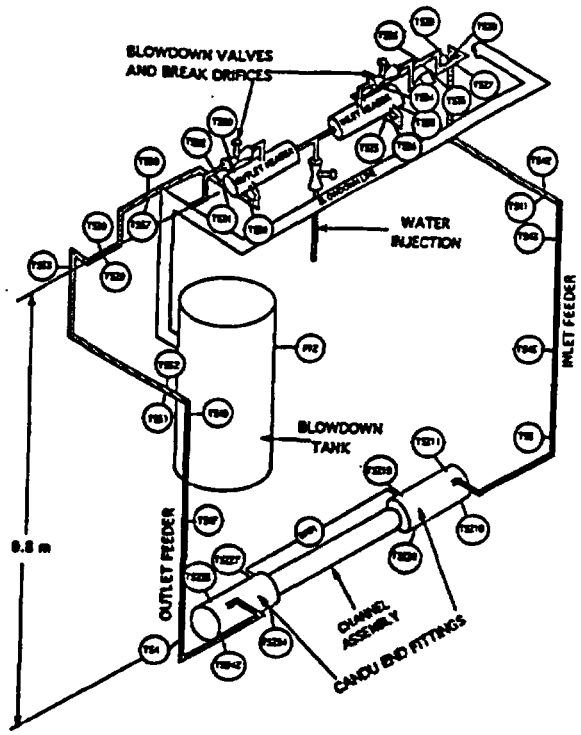

Figure 1: Schematic Diagram of CWIT Facility

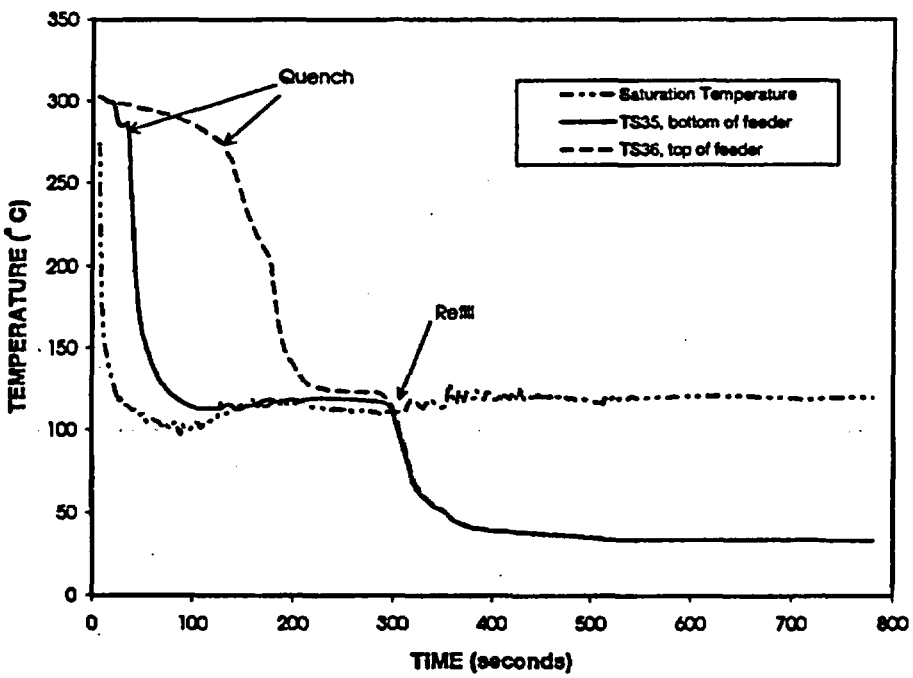

Figure 2: Feeder Surface Temperatures at TS35 and TS36 During Test 1465

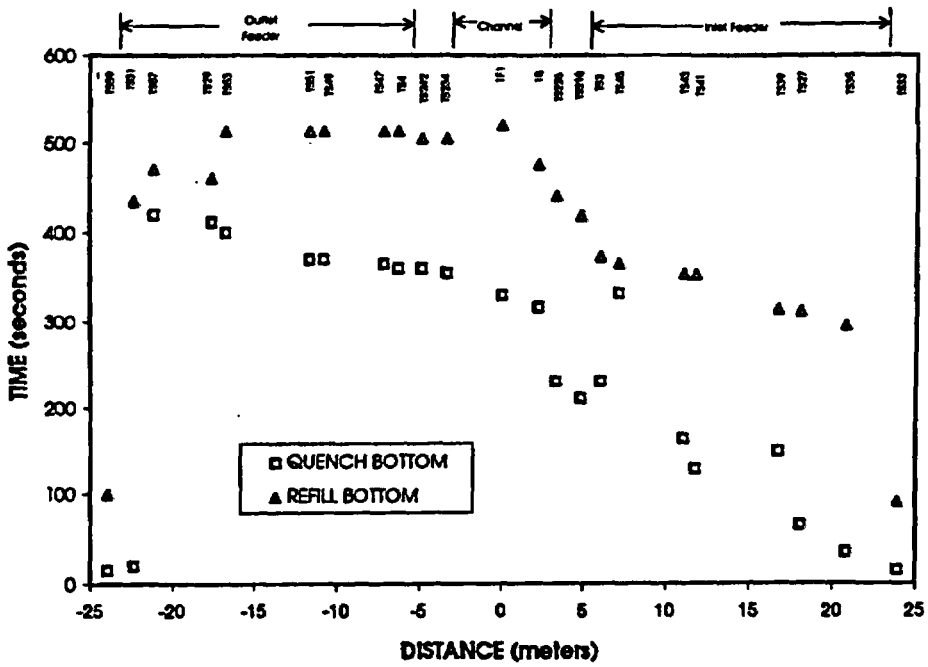

Figure 3: Quench and Refill Times at Various Loop Locations During Test 1465

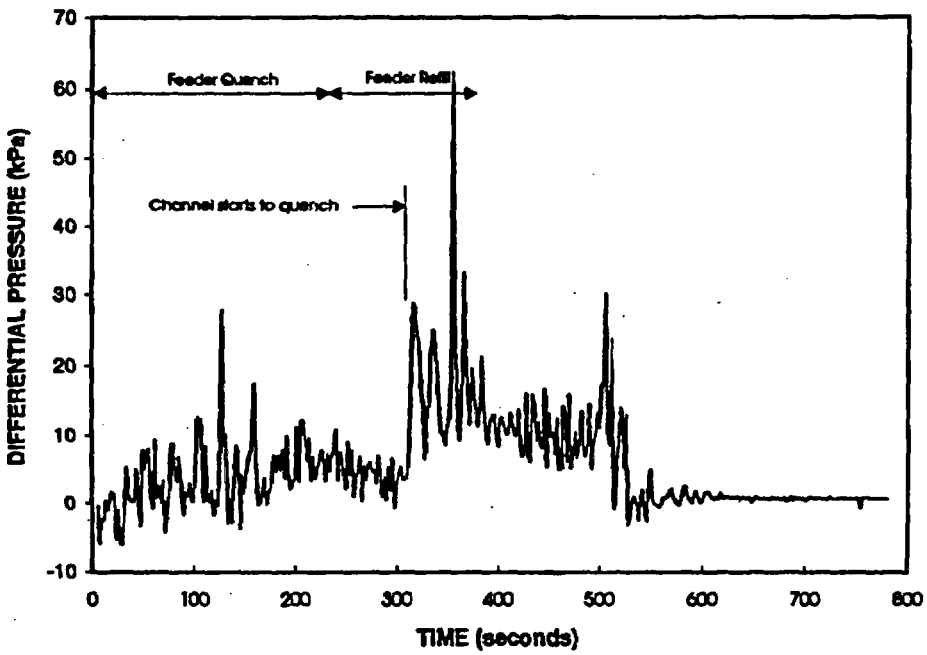

Figure 4: Channel Differential Pressure During Test 1465

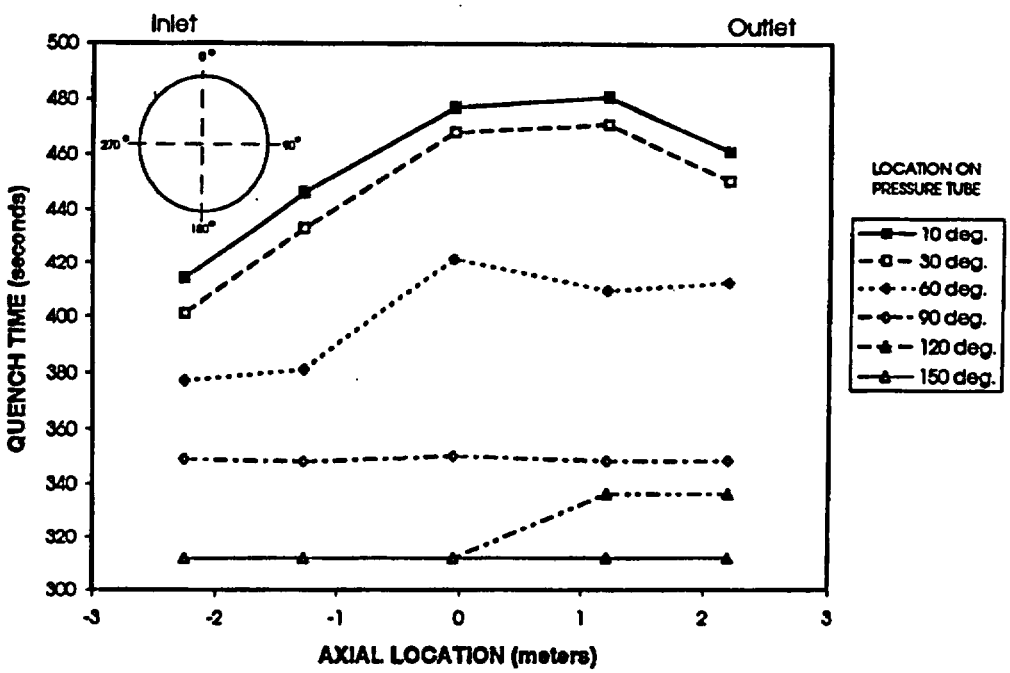

Figure 5: Quench Times Extracted from Pressure Tube Temperatures During Test 1465

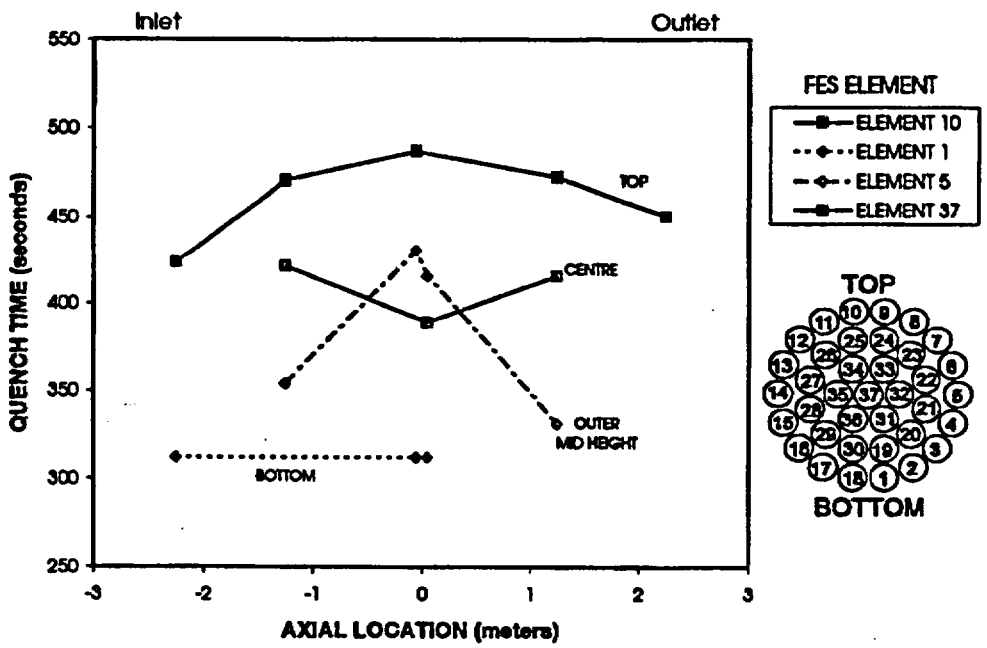

Figure 6: Quench Times Extracted from FES Temperatures During Test 1465

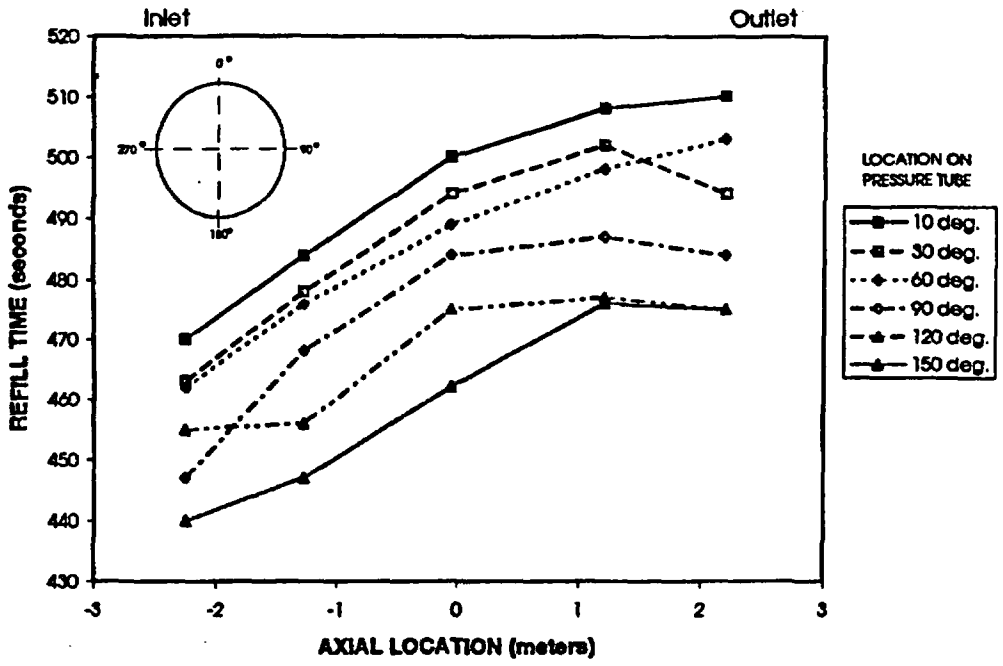

Figure 7: Refill Times Extracted from Pressure Tube Temperatures During Test 1465

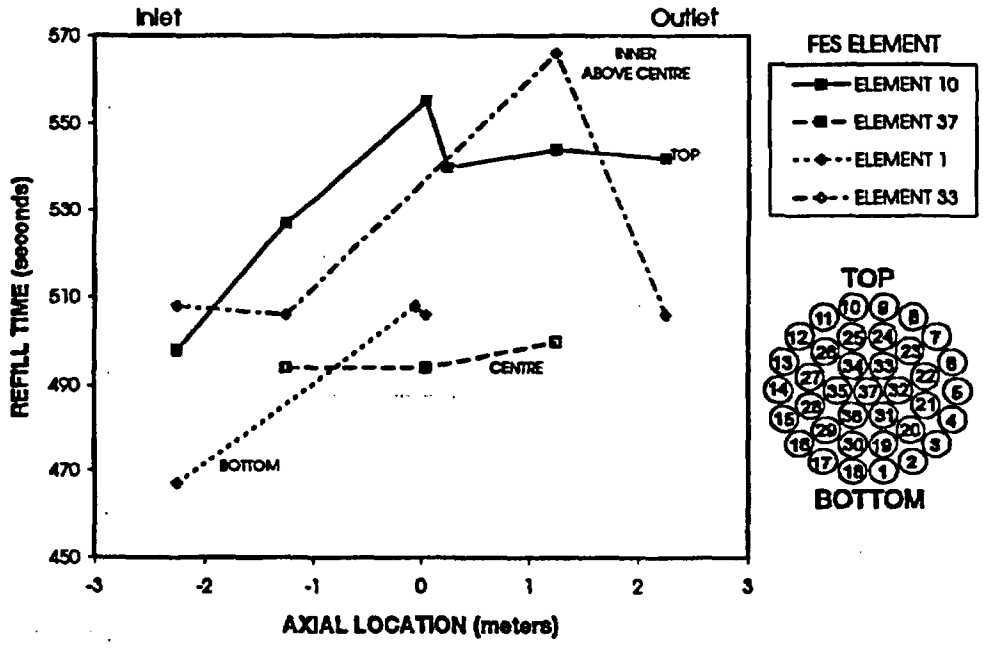

Figure 8: Refill Times Extracted from FES Temperatures During Test 1465

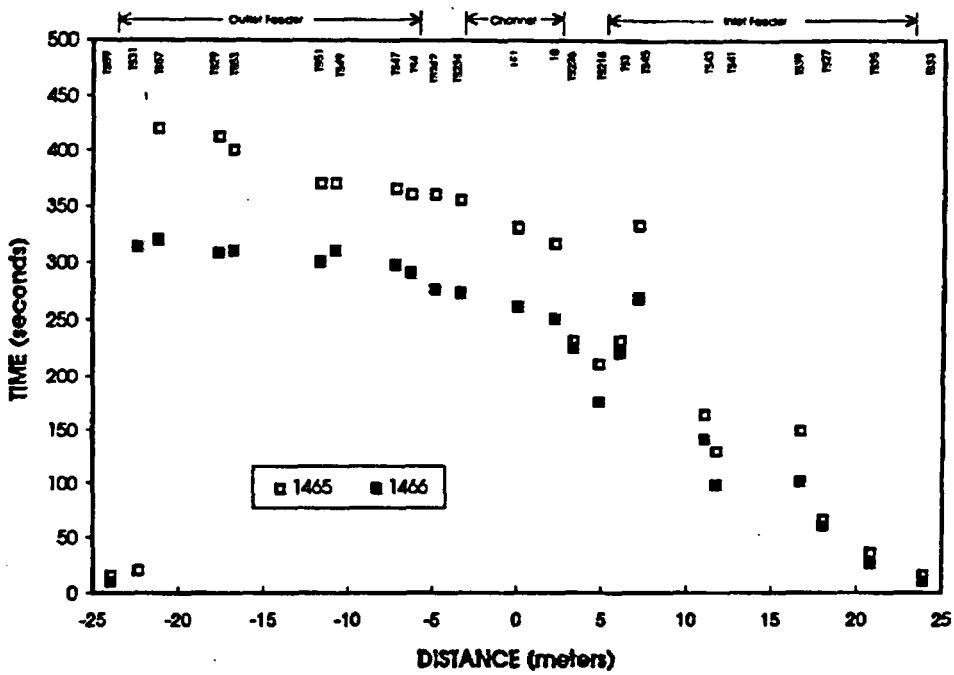

Figure 9: Quench Times at Various Locations During Tests 1465 and 1466

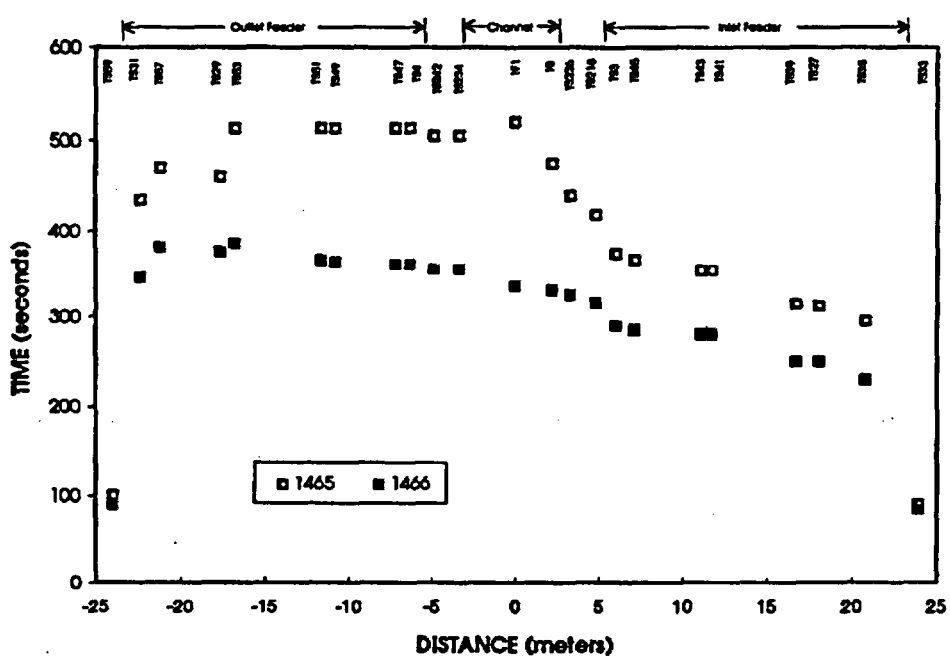

Figure 10: Refill Times at Various Locations During Tests 1465 and 1466

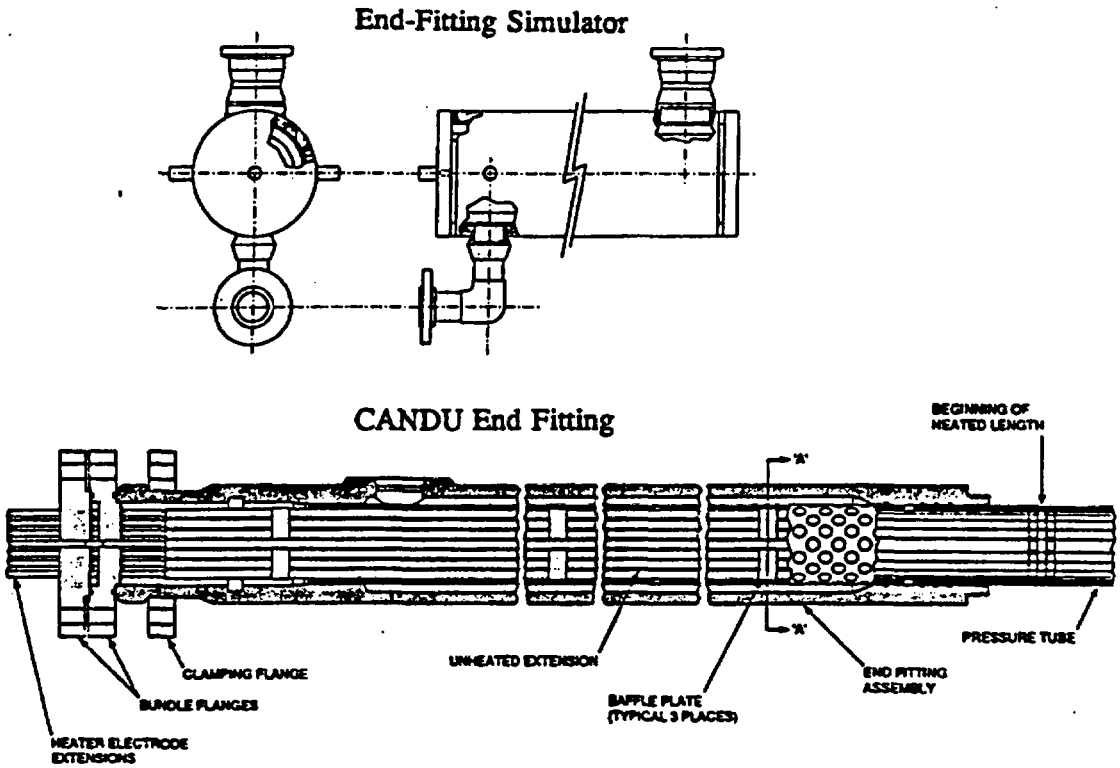

Figure 11: End-Fitting Simulator and CANDU End Fitting

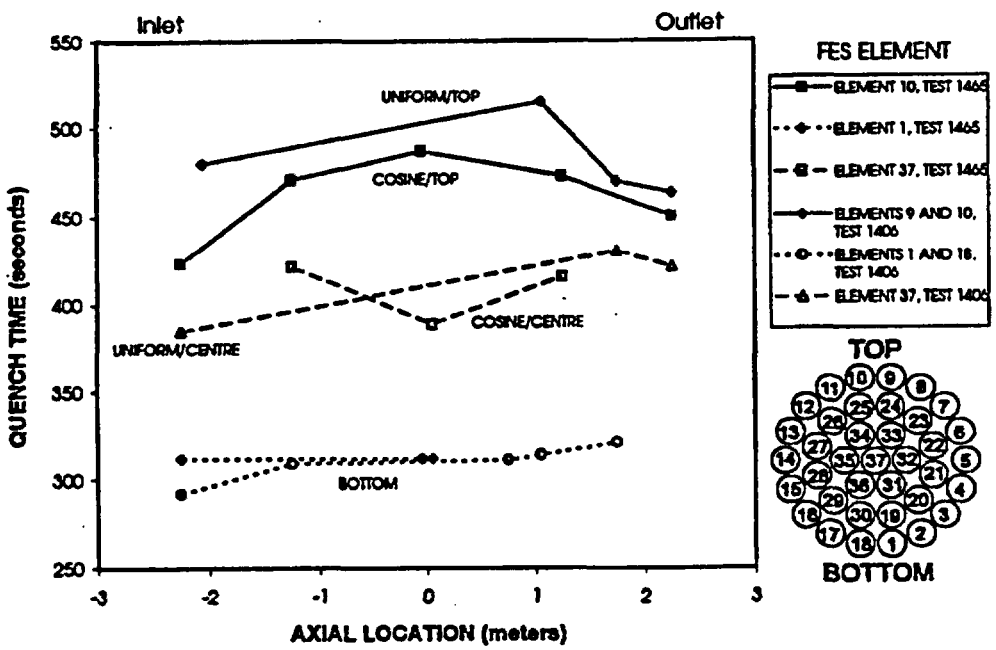

Figure 12: Quench Times Extracted from FES Temperatures, Tests 1465 and 1406

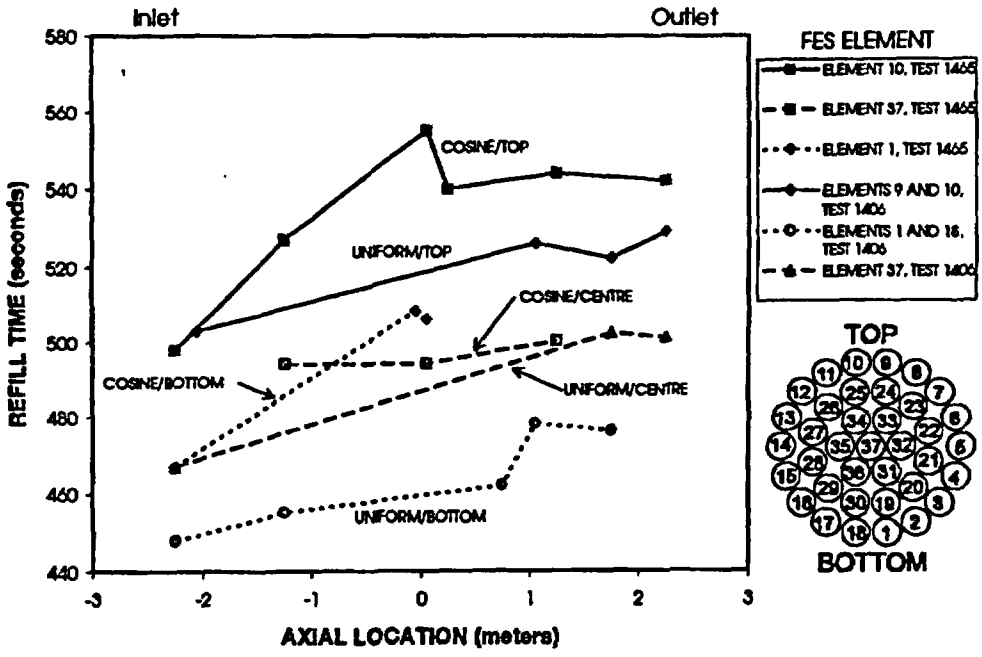

Figure 13: Refill Times Extracted from FES Temperatures, Tests 1465 and 1406