LR-53B-0

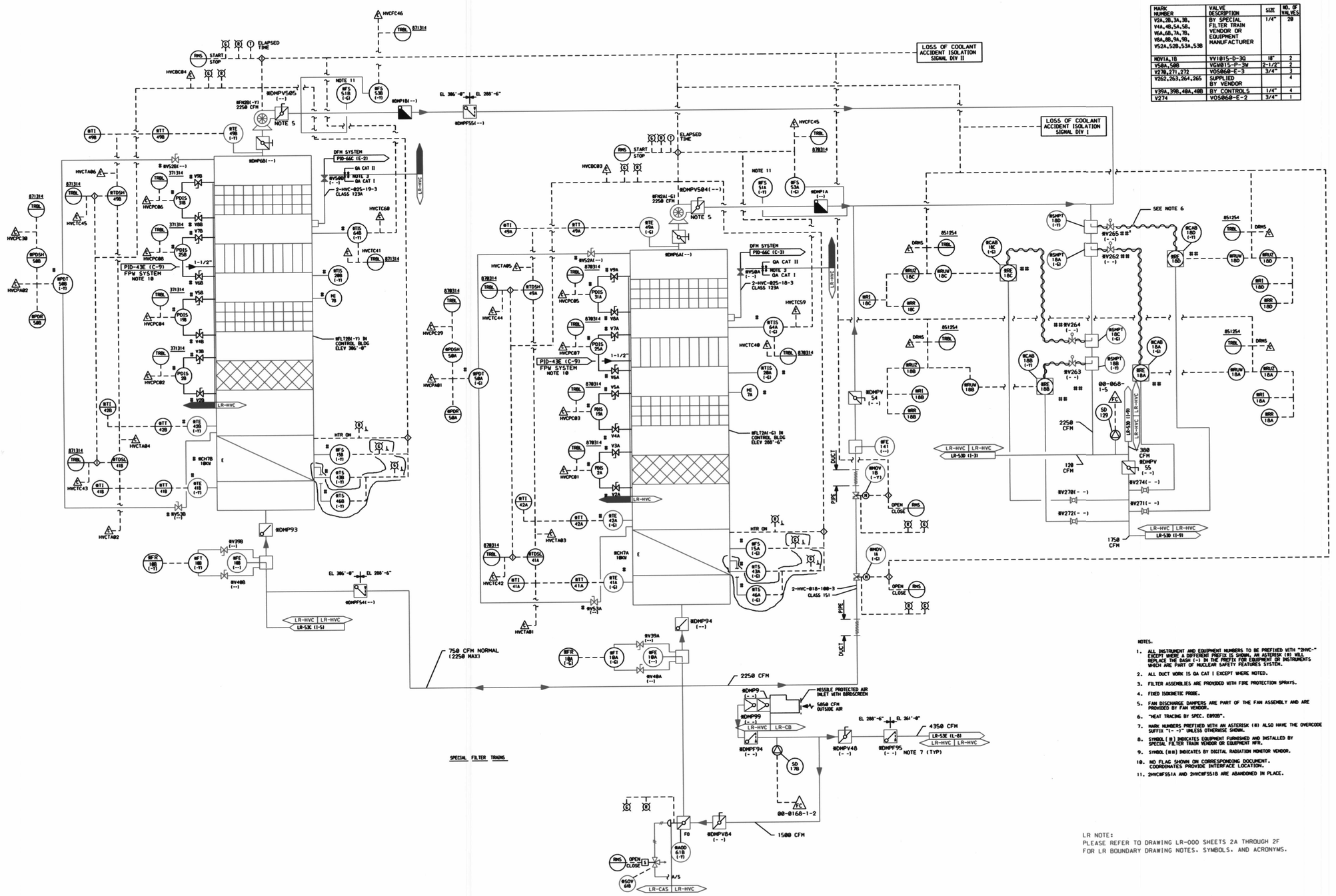

MARK NUMBER	VALVE DESCRIPTION	SIZE	NO. OF VALVES
V2A,2B,3A,3B, V4A,4B,5A,5B, V6A,6B,7A,7B, V8A,8B,9A,9B, V52A,52B,53A,53B	BY SPECIAL FILTER TRAIN VENDOR OR EQUIPMENT MANUFACTURER	1/4"	20
MOV1A,1B	VV1015-D-30	18"	2
V58A,58B	VGW015-P-3W	2-1/2"	2
V270,271,272	VOS060-E-3	3/4"	3
V262,263,264,265	SUPPLIED BY VENDOR		4
V39A,39B,40A,40B	BY CONTROLS	1/4"	4
V274	VOS060-E-2	3/4"	1

NOTES:

1. ALL INSTRUMENT AND EQUIPMENT NUMBERS TO BE PREFIXED WITH "2HVC-" EXCEPT WHERE A DIFFERENT PREFIX IS SHOWN. AN ASTERISK (*) WILL REPLACE THE DASH (-) IN THE PREFIX FOR EQUIPMENT OR INSTRUMENTS WHICH ARE PART OF NUCLEAR SAFETY FEATURES SYSTEM.
2. ALL DUCT WORK IS QA CAT I EXCEPT WHERE NOTED.
3. FILTER ASSEMBLIES ARE PROVIDED WITH FIRE PROTECTION SPRAYS.
4. FIXED ISOKINETIC PROBE.
5. FAN DISCHARGE DAMPERS ARE PART OF THE FAN ASSEMBLY AND ARE PROVIDED BY FAN VENDOR.
6. "HEAT TRACING BY SPEC. E0928".
7. MARK NUMBERS PREFIXED WITH AN ASTERISK (*) ALSO HAVE THE OVERCODE SUFFIX "(- -)" UNLESS OTHERWISE SHOWN.
8. SYMBOL (#) INDICATES EQUIPMENT FURNISHED AND INSTALLED BY SPECIAL FILTER TRAIN VENDOR OR EQUIPMENT MFR.
9. SYMBOL (##) INDICATES BY DIGITAL RADIATION MONITOR VENDOR.
10. NO FLAG SHOWN ON CORRESPONDING DOCUMENT. COORDINATES PROVIDE INTERFACE LOCATION.
11. 2HVC8F551A AND 2HVC8F551B ARE ABANDONED IN PLACE.

LR NOTE:
PLEASE REFER TO DRAWING LR-000 SHEETS 2A THROUGH 2F FOR LR BOUNDARY DRAWING NOTES, SYMBOLS, AND ACRONYMS.

THIS DRAWING WAS PRODUCED ELECTRONICALLY. DO NOT MAKE ANY CHANGES MANUALLY.

SAFETY RELATED
QUALITY RELATED
REF. SAR FIG. 9.4-1b

Constellation Energy Group

NINE MILE POINT NUCLEAR STATION
UNIT 2 - SCRIBA, N.Y.

PIPING & INSTRUMENTATION DIAGRAM
CONTROL BUILDING VENTILATION AND AIR CONDITIONING

SCALE NONE | DRAWING NO LR-53B-0

MF	REV	DATE	DESCRIPTION OF REVISION	M.O.	DFT	DES	CHKD	ENG	ELEC	MECH	STR

...\LR-053_b.dgn 5/14/2004 1:54:46 PM

D 190