LR-104B-0

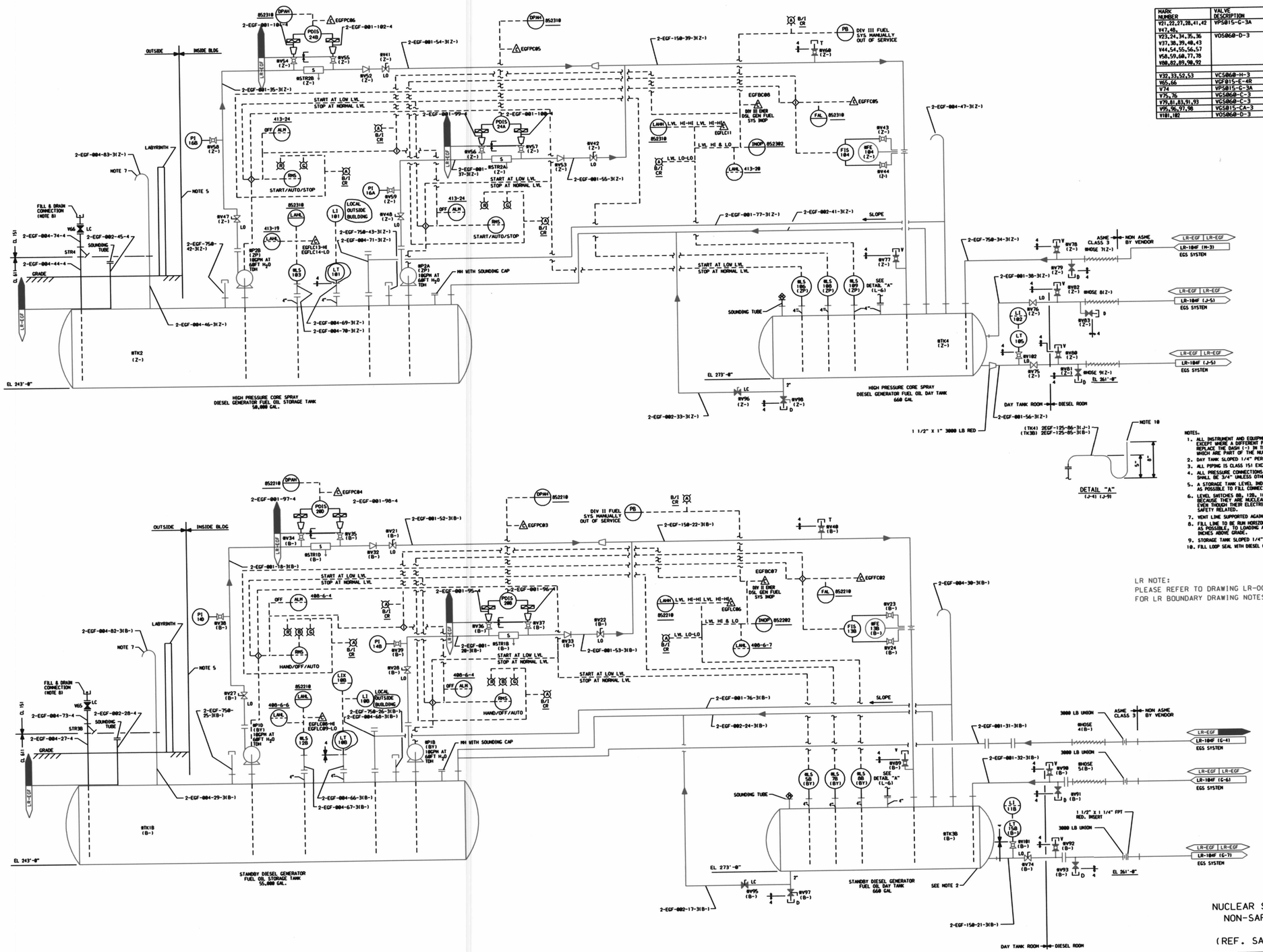

MARK NUMBER	VALVE DESCRIPTION	SIZE	NO. OF VALVES
V21,22,27,28,41,42 V47,48,	VPS015-C-3A	1"	8
V23,24,34,35,36 V37,38,39,40,43 V44,54,55,56,57 V58,59,60,77,78 V108,02,09,08,92	VOS060-D-3	3/4"	25
V32,33,52,53	VCS060-H-3	1"	4
V65,66	VGF015-E-4R	4"	2
V74	VPS015-C-3A	1 1/2"	1
V75,76	VCS060-C-3	1"	2
V79,81,83,91,93	VCS060-C-3	3/4"	5
V95,96,97,98	VCS015-CA-3	2"	4
V101,102	VOS060-D-3	1"	2

NOTES:

1. ALL INSTRUMENT AND EQUIPMENT NUMBERS TO BE PREFIXED WITH "2EGF-" EXCEPT WHERE A DIFFERENT PREFIX IS SHOWN. AN ASTERISK (8) WILL REPLACE THE DASH (-) IN THE PREFIX FOR EQUIPMENT AND INSTRUMENTS WHICH ARE PART OF THE NUCLEAR SAFETY FEATURES SYSTEM.
2. DAY TANK SLOPED 1/4" PER FOOT TOWARD DRAIN.
3. ALL PIPING IS CLASS 151 EXCEPT AS NOTED.
4. ALL PRESSURE CONNECTIONS AND LOCAL VENT AND DRAIN CONNECTIONS SHALL BE 3/4" UNLESS OTHERWISE NOTED.
5. A STORAGE TANK LEVEL INDICATOR MOUNTED ON OUTSIDE WALL AS NEAR AS POSSIBLE TO FILL CONNECTION.
6. LEVEL SWITCHES 88, 128, 183 & 189 ARE MARKED WITH AN ASTERISK BECAUSE THEY ARE NUCLEAR SAFETY-RELATED PRESSURE BOUNDARIES EVEN THOUGH THEIR ELECTRICAL FUNCTION IS NOT NUCLEAR SAFETY RELATED.
7. VENT LINE SUPPORTED AGAINST DOOR LABYRINTH.
8. FILL LINE TO BE RUN HORIZONTAL, AS CLOSE TO THE BUILDING AS POSSIBLE, TO LOADING AREA AT APPROXIMATELY 32 TO 42 INCHES ABOVE GRADE.
9. STORAGE TANK SLOPED 1/4" PER FT. TOWARDS FILL CONNECTION.
10. FILL LOOP SEAL WITH DIESEL OIL.

LR NOTE:
PLEASE REFER TO DRAWING LR-000 SHEETS 2A THROUGH 2F FOR LR BOUNDARY DRAWING NOTES, SYMBOLS, AND ACRONYMS.

THIS DRAWING WAS PRODUCED ELECTRONICALLY, DO NOT MAKE ANY CHANGES MANUALLY.

NUCLEAR SAFETY RELATED
NON-SAFETY RELATED

(REF. SAR FIG. 9.5-40b)

Constellation Energy Group

NINE MILE POINT NUCLEAR STATION UNIT 2 - SCRIBA, N.Y.

PIPING & INSTRUMENTATION DIAGRAM
STANDBY DIESEL GEN. SYSTEM

SCALE NONE | DRAWING NO LR-104B-0

NF	REV	DATE	DESCRIPTION OF REVISION	M.O.	DFT	DES	CHKD	ENG	ELEC	MECH	STR

...\LR-104_b.dgn 5/14/2004 2:46:05 PM

216