LR-82A-0

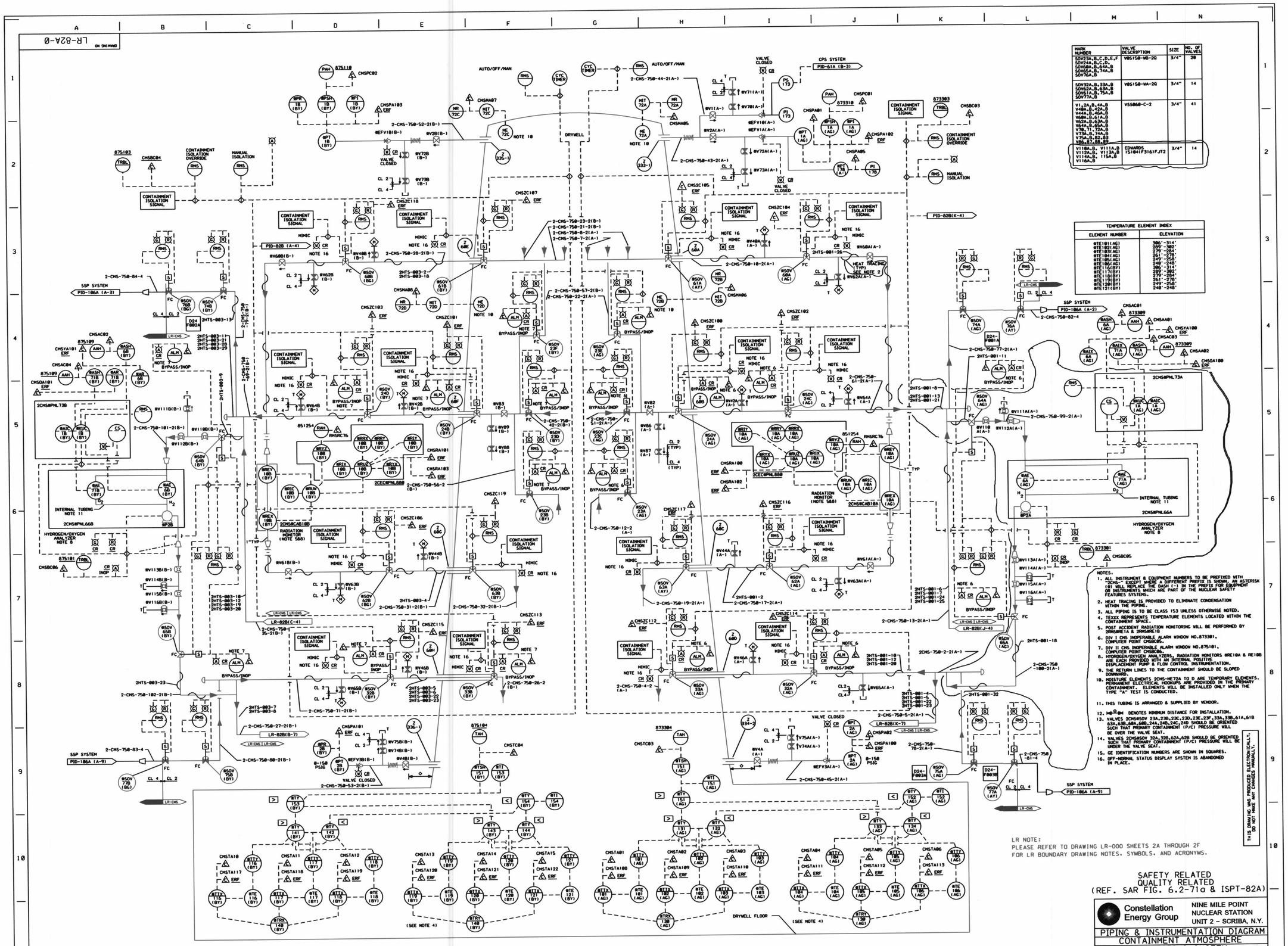


| MARK NUMBER | VALVE DESCRIPTION | SIZE | NO. OF VALVES |
|---|---|---|---|
| SOV23A,B,C,D,E,F<br>SOV24A,B,C,D,<br>SOV60A,B,64A,B<br>SOV65A,B,74A,B<br>SOV76A,B | V8515B-WB-2Q | 3/4" | 20 |
| SOV32A,B,33A,B<br>SOV62A,B,63A,B<br>SOV61A,B,75A,B<br>SOV77A,B | V8515B-WA-2Q | 3/4" | 14 |
| V1,2A,B,4A,B<br>V48A,B,42A,B<br>V44A,B,46A,B<br>V68A,B,61A,B<br>V62A,B,63A,B<br>V64A,B,65A,B<br>V70,71,72A,B<br>V73A,B,74A,B<br>V75A,B,82,83<br>V80,87,88,89 | V5506B-C-2 | 3/4" | 41 |
| V110A,B, V111A,B<br>V112A,B, V113A,B<br>V114A,B, 115A,B<br>V116A,B | EDWARDS<br>15104(F316)FJT2 | 3/4" | 14 |

| TEMPERATURE ELEMENT INDEX | |
|---|---|
| ELEMENT NUMBER | ELEVATION |
| RTE181(AG) | 306'-314' |
| RTE182(AG) | 289'-302' |
| RTE183(AG) | 279'-284' |
| RTE184(AG) | 261'-278' |
| RTE185(AG) | 249'-258' |
| RTE186(AG) | 249'-248' |
| RTE116(BY) | 306'-314' |
| RTE117(BY) | 289'-302' |
| RTE118(BY) | 279'-284' |
| RTE119(BY) | 261'-278' |
| RTE120(BY) | 249'-258' |
| RTE121(BY) | 248'-248' |

NOTES:

1. ALL INSTRUMENT & EQUIPMENT NUMBERS TO BE PREFIXED WITH "2CMS-" EXCEPT WHERE A DIFFERENT PREFIX IS SHOWN. AN ASTERISK (8) WILL REPLACE THE DASH (-) IN THE PREFIX FOR EQUIPMENT OR INSTRUMENTS WHICH ARE PART OF THE NUCLEAR SAFETY FEATURES SYSTEMS.
2. HEAT TRACING IS PROVIDED TO ELIMINATE CONDENSATION WITHIN THE PIPING.
3. ALL PIPING IS TO BE CLASS 153 UNLESS OTHERWISE NOTED.
4. TEXXX REPRESENTS TEMPERATURE ELEMENTS LOCATED WITHIN THE CONTAINMENT SPACE.
5. POST ACCIDENT RADIATION MONITORING WILL BE PERFORMED BY 2RMSRE1A & 2RMSRE1B
6. DIV I CMS INOPERABLE ALARM WINDOW NO.873301. COMPUTER POINT CMS8C05.
7. DIV II CMS INOPERABLE ALARM WINDOW NO.875101. COMPUTER POINT CMS8C06.
8. HYDROGEN/OXYGEN ANALYZERS, RADIATION MONITORS RRE10A & RE10B ARE EACH PROVIDED WITH AN INTERNAL POSITIVE DISPLACEMENT PUMP & FLOW CONTROL INSTRUMENTATION.
9. THE RETURN LINES TO THE CONTAINMENT SHOULD BE SLOPED DOWNWARD.
10. MOISTURE ELEMENTS 2CMS-ME72A TO D ARE TEMPORARY ELEMENTS. PERMANENT ELECTRICAL HOOKUPS ARE PROVIDED IN THE PRIMARY CONTAINMENT. ELEMENTS WILL BE INSTALLED ONLY WHEN THE TYPE "A" TEST IS CONDUCTED.
11. THIS TUBING IS ARRANGED & SUPPLIED BY VENDOR.
12. H-2-84 DENOTES MINIMUM DISTANCE FOR INSTALLATION.
13. VALVES 2CMS#SOV 23A,23B,23C,23D,23E,23F,33A,33B,61A,61B 63A,63B,68A,68B,24A,24B,24C,24D SHOULD BE ORIENTED SUCH THAT PRIMARY CONTAINMENT (P/C) PRESSURE WILL BE OVER THE VALVE SEAT.
14. VALVES 2CMS#SOV 32A,32B,62A,62B SHOULD BE ORIENTED SUCH THAT PRIMARY CONTAINMENT (P/C) PRESSURE WILL BE UNDER THE VALVE SEAT.
15. GE IDENTIFICATION NUMBERS ARE SHOWN IN SQUARES.
16. OFF-NORMAL STATUS DISPLAY SYSTEM IS ABANDONED IN PLACE.

THIS DRAWING WAS PRODUCED ELECTRONICALLY. DO NOT MAKE ANY CHANGES MANUALLY.

LR NOTE:
PLEASE REFER TO DRAWING LR-000 SHEETS 2A THROUGH 2F FOR LR BOUNDARY DRAWING NOTES, SYMBOLS, AND ACRONYMS.

SAFETY RELATED
QUALITY RELATED
(REF. SAR FIG. 6.2-71a & ISPT-82A)

Constellation Energy Group

NINE MILE POINT NUCLEAR STATION
UNIT 2 - SCRIBA, N.Y.

PIPING & INSTRUMENTATION DIAGRAM
CONTAINMENT ATMOSPHERE MONITORING SYSTEM

SCALE NONE | DRAWING NO LR-82A-0

| NF | REV | DATE | DESCRIPTION OF REVISION | M.O. | DFT | DES | CHKD | ENG | ELEC | MECH | STR |
|---|---|---|---|---|---|---|---|---|---|---|---|

...\LR-082_a.dgn 5/14/2004 2:38:02 PM

213